INTERNATIONAL STANDARD

ISO/IEC 11518-9

First edition
1999-04

Information technology – High-Performance Parallel Interface –

Part 9: Serial Specification (HIPPI-Serial)



Reference number
ISO/IEC 11518-9:1999(E)

Copyright International Organization for Standardization
Provided by IHS under license with ISO
No reproduction or networking permitted without license from IHS
Not for Resale

INTERNATIONAL STANDARD

ISO/IEC 11518-9

First edition
1999-04

Information technology – High-Performance Parallel Interface –

Part 9: Serial Specification (HIPPI-Serial)

© ISO/IEC 1999

All rights reserved. Unless otherwise specified, no part of this publication may be reproduced or utilized in any form or by any means, electronic or mechanical, including photocopying and microfilm, without permission in writing from the publisher.

ISO/IEC Copyright Office • Case postale 56 • CH-1211 Genève 20 • Switzerland



PRICE CODE P

For price, see current catalogue

Copyright International Organization for Standardization
Provided by IHS under license with ISO
No reproduction or networking permitted without license from IHS

Not for Resale

CONTENTS

Page

FOREWORD iii

INTRODUCTION iv

Clause

1 Scope 1

2 Normative references 1

3 Definitions and conventions 2

3.1 Definitions 2

3.2 Editorial conventions 4

3.3 Acronyms and other abbreviations 4

4 System overview 4

4.1 Functional units 5

4.3 Non-HIPPI-PH control signals, OH*n* (Overhead bits) 6

4.4 Serial data input and output 6

4.5 Configurations 6

5 Transmit section 6

5.1 Encoding the 20-bit data fields 6

5.2 Encoding F0, F1 with REQUEST, PACKET, and BURST 6

5.3 Encoding M0, M1 with CONNECT, READY, and OH*n* 7

5.5 Transmit section clock signals 10

6 Receive section 11

6.1 Receive section clock signals 11

6.2 Operating on the 24-bit frames 11

6.3 Decoding 20-bit data fields 12

6.4 Decoding F0, F1 into REQUEST, PACKET, and BURST 12

6.5 Decoding M0, M1 into CONNECT, READY, and OH*n* 12

7 Link Control 13

7.1 Link Control output signals 13

7.2 Link Control input signals 13

7.3 Link reset 13

8 Serial optical interface 14

8.1 General specifications 14

8.2 Fibre type 15

8.3 Optical connectors 15

Copyright International Organization for Standardization
Provided by IHS under license with ISO
No reproduction or networking permitted without license from IHS
Not for Resale

Tables

Table 1 – 20-bit data field structure 7
Table 2 – REQUEST, PACKET and BURST coding in F0 and F1 7
Table 3 – M0, M1 contents 7
Table 4 – Overhead bit (OHn) functions 8
Table 5 – Overhead bit 1 (OH1) coding 8
Table 7 – General long wavelength optical specifications over single-mode fibre 15
Table 8 – General long wavelength optical specifications over multimode fibre 16
Table 9 – General short wavelength optical specifications 16

Figures

Figure 1 – 32-bit, dual-simplex, HIPPI-Serial functional units example 5
Figure 2 – Link reset state diagram 13
Figure 3 – Transmitter eye diagram mask 15
Figure A.1 – SUBMUX block diagram 18
Figure A.2 – SUBDEMUX block diagram 18
Figure D.1 – Remote and local loopback 24

Annexes

A Implementation suggestions 17
A.1 Example SUBMUX circuit 17
A.2 Example SUBDEMUX circuit 17
A.3 TLI and RLI availability 17
B Additional optical information 19
B.1 Eye measurements with an oscilloscope 19
B.2 Optical power 19
B.3 Optical spectrum 19
B.4 Eye safety 19
B.5 Loss budget examples 19
C HIPPI-PH signal relationships 21
C.1 REQUEST, PACKET, and BURST 21
C.2 Control signals during errors 21
D HIPPI-PH Extender 23
D.1 HIPPI-PH signals 23
D.2 HIPPI-Serial Extender loopbacks 23
D.3 HIPPI-Serial Extender front panel user interface 25
E Bibliography 26

Copyright International Organization for Standardization
Provided by IHS under license with ISO
No reproduction or networking permitted without license from IHS
Not for Resale

Information technology – High-Performance Parallel Interface –

Part 9: Serial Specification (HIPPI-Serial)

Foreword

ISO (the International Organization for Standardization) and IEC (the International Electrotechnical Commission) form the specialized system for worldwide standardization. National bodies that are members of ISO or IEC participate in the development of International Standards through technical committees established by the respective organization to deal with particular fields of technical activity. ISO and IEC technical committees collaborate in fields of mutual interest. Other international organizations, governmental and non-governmental, in liaison with ISO and IEC, also take part in the work.

In the field of information technology, ISO and IEC have established a joint technical committee, ISO/IEC JTC 1. Draft International Standards adopted by the joint technical committee are circulated to national bodies for voting. Publication as an International Standard requires approval by at least 75% of the national bodies casting a vote.

International Standard ISO/IEC 11518-9 was prepared by subcommittee 25: *Interconnection of information technology equipment,* of ISO/IEC Joint Technical Committee 1: *Information technology.*

ISO/IEC 11518 consists of the following parts, under the general title *Information technology – High-Performance Parallel Interface:*

- *Part 1: Mechanical, electrical, and signalling protocol specification (HIPPI-PH)*
- *Part 2: Framing Protocol (HIPPI-FP)*
- *Part 3: Encapsulation of ISO/IEC 8802-2 (IEEE Std 802.2) Logical Link Control Protocol Data Units (HIPPI-LE)*
- *Part 4: Mapping of HIPPI to IPI device generic command sets (HIPPI-IPI)*
- *Part 5: Memory Interface (HIPPI-MI)*
- *Part 6: Physical Switch Control (HIPPI-SC)*
- *Part 8: Mapping to Asynchronous Transfer Mode (HIPPI-ATM)*
- *Part 9: Serial Specification (HIPPI-Serial)*

Annexes A to E of this part of ISO/IEC 11518 are for information only.

Copyright International Organization for Standardization
Provided by IHS under license with ISO
No reproduction or networking permitted without license from IHS Not for Resale

Introduction

This High-Performance Parallel Interface, Serial Specification (HIPPI-Serial), defines a physical-level interface for transmitting digital data at 800 Mbit/s or 1 600 Mbit/s serially over fibre-optic cables across distances of up to 10 km. The signalling sequences and protocol used are compatible with HIPPI-PH, ISO/IEC 11518-1, which is limited to 25 m distances. HIPPI-Serial may be integrated as a host's native interface, or used as an external extender for HIPPI-PH ports.

Characteristics of a HIPPI Serial interface include:

- Point-to-point connections use one or two pairs of fibre-optic cables for distances of up to 10 km.
- Long wavelength and short-wavelength optics options.
- May be used in a simplex or duplex configuration.
- Support for 800 Mbit/s or 1 600 Mbit/s data rates.
- Use as an integrated host interface without an intervening HIPPI-PH is supported.
- Use as an external extender for HIPPI-PH ports is supported.
- The coding scheme provides low-latency, automatic link reset, and robust operation.

Copyright International Organization for Standardization
Provided by IHS under license with ISO
No reproduction or networking permitted without license from IHS
Not for Resale

Information technology – High-Performance Parallel Interface –

Part 9: Serial Specification (HIPPI-Serial)

1 Scope

This part of ISO/IEC 11518 specifies a physical-level interface for transmitting digital data at 800 Mbit/s or 1 600 Mbit/s serially over fibre-optic cables across distances of up to 10 km. The signalling sequences and protocol used are compatible with HIPPI-PH, ISO/IEC 11518-1, which is limited to 25 m distances. HIPPI-Serial may be integrated as a host's native interface, or used as an external extender for HIPPI-PH ports.

Specifications are included for:

- the encoding and serialisation of the parallel data;
- the sequence of signals required for link reset;
- the timing and optical requirements of the serial signals;
- 32-bit (800 Mbit/s, 100 MByte/s) and 64-bit (1 600 Mbit/s, 200 MByte/s) operation;
- simplex and dual simplex operation.

2 Normative references

The following standards contain provisions which, through reference in this text, constitute provisions of this part of ISO/IEC 11518. At the time of publication, the editions indicated were valid. All standards are subject to revision, and parties to agreements based on this part of ISO/IEC 11518 are encouraged to investigate the possibility of applying the most recent edition of the standards listed below. Members of IEC and ISO maintain registers of currently valid International Standards.

ISO/IEC 11518-1:1995, *High-Performance Parallel Interface – Part 1: Mechanical, electrical, and signalling protocol specification (HIPPI-PH)*

ISO/IEC 14165-111:199x, *Fibre Channel – Part 111: Physical and Signalling Interface (FC-PH)*

ITU-T G.652: *Characteristics of a single mode optical fibre cable*

IEC 61300-3-6: *Fibre optic interconnecting devices and passive components – Basic test and measurement procedures – Part 3-6: Examinations and measurements – Return loss*

IEC 61280-1-3: *Fibre optic communication subsystem basic test procedures – Part 1-3: Test procedures for general communication subsystems – Central wavelength and spectral width measurement*

IEC 61280-2-1: *Fibre optic communication subsystem basic test procedures – Part 2-1: Test procedures for digital systems – Receiver sensitivity and overload measurement*

Copyright International Organization for Standardization
Provided by IHS under license with ISO
No reproduction or networking permitted without license from IHS
Not for Resale

3 Definitions and conventions

3.1 Definitions

For the purposes of this standard, the following definitions apply.

3.1.1
attenuation
The power loss expressed in units of dB.

3.1.2
average power
The optical power measured using an average reading power meter when transmitting continuous valid information.

3.1.3
bit error rate (BER)
The statistical probability of a transmitted bit being erroneously received in a communication system. The BER is measured by counting the number of erroneous bits at the output of the receiver and dividing by the total number of bits.

3.1.4
B0-B19
Bits in the 20-bit data field.

3.1.5
centre wavelength (laser)
The nominal value of the central operating wavelength, defined by a peak mode measurement. (See IEC 61280-1-3.)

3.1.6
coding nibble
The 4 bits appended to a 20-bit data field to form a frame. They signal data inversion, indicate fill frames, and supply the Master Transition.

3.1.7
D0-D31, D32-D63
Bits in the 32-bit, and extension for 64-bit, parallel HIPPI word.

3.1.8
data field
The 20-bit data portion of a 24-bit frame.

3.1.9
debounced signal
A signal that has been converted from an intermittent signal to a stable one. (See 7.2.)

3.1.10
Destination
A HIPPI-PH Destination.

3.1.11
extinction ratio
The ratio, expressed in units of dB of the low, or "off" optical power level (PL), to the high, or "on" optical power level (PH), when the station is transmitting valid information.

3.1.12
fibre-optic test procedure (FOTP)
Standards developed and published by the Electronic Industries Association (EIA) under the EIA-RS-455 series of standards.

3.1.11
fibre plant
All of the optical elements, for example, fibre, connectors, splices, etc., between an optical transmitter and an optical receiver.

3.1.14
frame
24 bits consisting of a 20-bit data field and 4-bit coding nibble.

3.1.15

functional unit
A functional partition of the entire system. Partitioning is for the purpose of explanation only. Implementers are free to combine or divide functional units.

3.1.16
HIPPI-PH
High-Performance Parallel Interface – Mechanical, Electrical, and Signalling Protocol Specification (HIPPI-PH), ISO/IEC 11518-1. Data is transmitted in parallel over copper twisted-pair cables.

3.1.17
HIPPI port
A HIPPI-PH Source or Destination.

Copyright International Organization for Standardization
Provided by IHS under license with ISO
No reproduction or networking permitted without license from IHS
Not for Resale

3.1.18
link
One way serial connection between HIPPI-Serial devices.

3.1.19

Master Transition
A bit transition that always appears between the second and third bits of the coding nibble.

3.1.20
mean launch power
The average optical power for a continuous valid information stream coupled into a fibre.

3.1.21
Optical Fibre System Test Practice (OFSTP)
Standards developed and published by the Electronics Industries Association (EIA) under the EIA/TIA-526 series of standards.

3.1.22
optical return loss
The ratio (expressed in units of dB) of optical power reflected by a component or an assembly to the optical power incident on a component port when that component or assembly is introduced into a link or system.
(See IEC 61300-3-6 method 1.)

3.1.23
optional
Characteristics that are not required by HIPPI-Serial. However, if any optional characteristic is implemented, it shall be implemented as defined in HIPPI-Serial.

3.1.24
Overhead bit (OH1-OH8)
A bit, local to the HIPPI-Serial hardware, which is transmitted along with the HIPPI-PH data over the serial link to provide extra capacity for control and maintenance functions.

3.1.25
Receiver Link Interface (RLI)
A functional unit that deserialises and decodes the serial input data into 20-bit data fields.

3.1.26
Source
A HIPPI-PH Source.

3.1.27
spectral width (RMS)
The root mean square (RMS) width of the Active Output interface optical spectrum.
(See IEC 61280-1-3.)

3.1.28
SUBMUX, SUBDEMUX
Functional units that combine (extract) the CONNECT, READY, and Overhead bits for transmission across the serial links as bits M0 and M1.

3.1.29
time slot
a contiguous group of 16 frame pairs. Note that a frame pair contains one 40-bit word.

3.1.30
Transmitter Link Interface (TLI)
A functional unit that encodes and serialises 20-bit data fields, preparing them for serial transmission.

3.1.31
unit
See functional unit.

3.1.32
XDEMUX
A functional unit that decodes two 20-bit data fields into HIPPI data and control signals.

3.1.33
XMUX
A functional unit that encodes the HIPPI data and control signals into two 20-bit data fields.

Copyright International Organization for Standardization
Provided by IHS under license with ISO
No reproduction or networking permitted without license from IHS
Not for Resale

3.2 Editorial conventions

In this standard, certain terms that are proper names of signals or similar terms are printed in uppercase to avoid possible confusion with other uses of the same words (e.g. FLAG). Any lowercase uses of these words have the normal technical English meaning.

A number of conditions, sequence parameters, events, states or similar terms are printed with the first letter of each word in uppercase and the rest lowercase (e.g. State, Source). Any lowercase uses of these words have the normal technical English meaning.

The word *shall*, when used in this standard, states a mandatory rule or requirement. The word *should*, when used in this standard, states a recommendation.

3.3 Acronyms and other abbreviations

BER	bit error rate
dB	decibel
dBm	decibel (relative to 1 mW power)
FOTP	Fibre Optic Test Procedure
HIPPI	High-Performance Parallel Interface
LLRC	Length/Longitudinal Redundancy Checkword
ns	nanoseconds
nm	nanometers
OFSTP	Optical Fibre System Test Practice
PLL	phase locked loop
PRBS	pseudo random bit sequence
RIN	relative intensity noise
RLI	Receiver Link Interface
RMS	root mean square
SUBMUX	Sub Multiplexer
SUBDEMUX	Sub De-Multiplexer
TLI	Transmitter Link Interface
UI	Unit interval = 1 bit period
XDEMUX	Receive De-Multiplexer
XMUX	Transmit Multiplexer
µs	microseconds
Ω	ohms

4 System overview

The HIPPI-Serial provides a serial communication facility for HIPPI. The primary purpose of HIPPI-Serial is to extend the physical range of HIPPI beyond 25 m. A secondary purpose is to replace the parallel HIPPI-PH cable and connectors with a fibre-optic cable.

The primary characteristics of HIPPI-Serial are:

Signalling Rate	1,2 GBaud
Maximum station separation:	10 km
Bit-Error Rate	$\leq 10^{-12}$

64-Bit (1 600 Mbit/s) HIPPI supported by two HIPPI-Serials in parallel

HIPPI simplex or dual simplex operation

Since error rates are specified to be at or below 10^{-12}, forward error correction, error correcting codes and CRCs are not addressed in this specification. If additional error detection is deemed necessary, it shall be included as part of the higher-level protocols.

4.1 Functional units

Figure 1 is an example showing functional unit building blocks that may be used in a HIPPI-Serial implementation. This specification is written in terms of the functional units shown in figure 1. However, implementers are free to split or combine functions as they choose. This document does not intend to specify any of the interfaces between functional units. The only requirement for compatibility is that the external functionality, at the serial optical interfaces, conform to the overall functionality specified in this document.

4.2 HIPPI-PH signals

The HIPPI-PH Source and Destination signals shown in figure 1 shall conform to the signalling protocol specified in ISO/IEC 11518-1, HIPPI-PH. These HIPPI-PH signals do not need to conform to the HIPPI-PH mechanical and electrical specifications. The HIPPI-PH INTERCONNECT signals shall not be transported over the serial link to the remote end.

Copyright International Organization for Standardization
Provided by IHS under license with ISO
No reproduction or networking permitted without license from IHS
Not for Resale

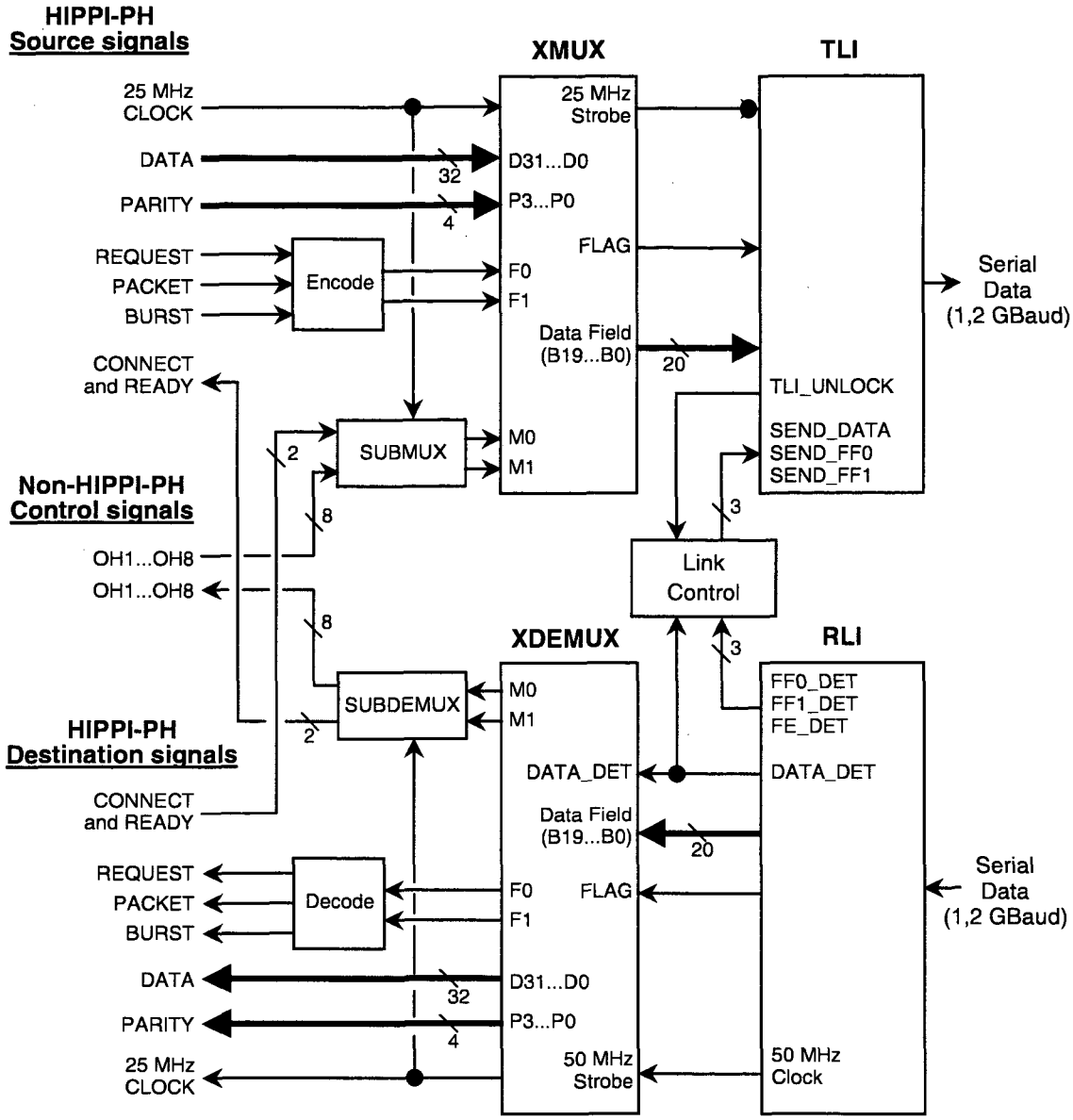

Figure 1 – 32-bit, dual-simplex, HIPPI-Serial functional units example

Copyright International Organization for Standardization
Provided by IHS under license with ISO
No reproduction or networking permitted without license from IHS
Not for Resale

4.3 Non-HIPPI-PH control signals, OH*n* (Overhead bits)

The Overhead bits, OH1 - OH8, provide a framing function and some optional end-to-end status and control capability that is outside the scope of HIPPI-PH. See 5.3.1 for details of the Overhead bits.

4.4 Serial data input and output

The 1,2 GBaud serial data stream defined in this specification is the interoperability point between different implementations.

4.5 Configurations

4.5.1 Dual-simplex and simplex

Figure 1 shows a 32-bit dual-simplex HIPPI-Serial configuration. One fibre cable carries data and control signals from the HIPPI-PH Source, and return direction CONNECT and READY signals to the HIPPI-PH Destination. The other cable carries the reverse direction signals. This uses a pair of links.

Simplex operation may be achieved by ignoring the unused HIPPI-PH signals, or setting them to zeros. The recovered HIPPI-PH CLOCK signal on the active side shall be used to drive the HIPPI-PH Source CLOCK signal on the unused side.

4.5.2 32-bit and 64-bit systems

32-bit (800 Mbit/s) HIPPI-Serial implementations shall use a pair of links and two fibres as shown in figure 1. 64-bit (1 600 Mbit/s) HIPPI-Serial implementations shall use two link-pairs shown in figure 1, and four fibres. See 5.1, 6.3, 6.4 and 6.5 for details of the information on the separate links of a 64-bit implementation. See 7.3 for details of the 64-bit dual-link reset operations.

4.5.3 HIPPI-Serial extenders

An external extender for copper-cable-based HIPPI-PH ports is described in annex D.

5 Transmit section

The transmit section consists of the Encode, SUBMUX, XMUX, and Transmitter Link Interface (TLI) functional units shown in the top portion of figure 1. The transmit section encodes parallel signals into a DC balanced serial stream.

5.1 Encoding the 20-bit data fields

40-bit words consisting of 32 bits of HIPPI-PH data, 4 bits of HIPPI-PH parity, F0, F1, M0, and M1, shall be split into two 20-bit data fields. In figure 1 this function is called the XMUX. A FLAG signal shall be used to identify the first 20-bit data field from the second 20-bit data field. Table 1 specifies the bit assignments in the 20-bit data fields, and the associated FLAG values. The 20-bit data field with FLAG = 0 shall be transmitted before the related 20-bit data field with FLAG = 1.

NOTE – The bit arrangement in table 1 reduces the possibility of corrupted data being identified as good data. The HIPPI-PH parity bits cover a byte of adjacent data bits (e.g. P0 covers D0 - D7). By scattering the HIPPI-PH data and parity bits in the 20-bit fields, a noise hit corrupting up to seven adjacent data field bits in the serial stream will be detected as a HIPPI-PH parity error. Corrupted bits in the coding nibble, will also be detected as errors.

32-bit (800 Mbit/s) HIPPI-Serial variants shall use one link as shown in figure 1, and shown as link "a" in table 1.

64-bit (1 600 Mbit/s) HIPPI-Serial variants shall use two separate physical links in parallel; these are called links "a" and "b" in table 1. The serial data streams on links "a" and "b" shall be time aligned within 2 ns at the transmitter.

5.2 Encoding F0, F1 with REQUEST, PACKET, and BURST

The HIPPI-PH REQUEST, PACKET and BURST control signals shall be encoded into the F0 and F1 bits as shown in table 2. (See annex C.1 for descriptions of these HIPPI-PH signals.)

Copyright International Organization for Standardization
Provided by IHS under license with ISO
No reproduction or networking permitted without license from IHS Not for Resale

Table 1 – 20-bit data field structure

Link -	Data field bit B*n*																			
FLAG	0	1	2	3	4	5	6	7	8	9	10	11	12	13	14	15	16	17	18	19
a - 0	D00	D08	D16	D24	D01	D09	D17	D25	D02	D10	D18	D26	D03	D11	F0	D19	D27	P0	P1	F1
a - 1	P2	P3	D04	D12	D20	D28	D05	D13	D21	D29	D06	D14	D22	D30	M0	D07	D15	D23	D31	M1
b - 0	D32	D40	D48	D56	D33	D41	D49	D57	D34	D42	D50	D58	D35	D43	F0	D51	D59	P4	P5	F1
b - 1	P6	P7	D36	D44	D52	D60	D37	D45	D53	D61	D38	D46	D54	D62	'0'	D39	D47	D55	D63	'0'

Link: *a/b* denotes separate physical links. *a* is used individually for 800 Mbit/s operation, *a* and *b* are used together for 1 600 Mbit/s operation.
FLAG: *0/1* is derived from the coding nibble and is used to differentiate the first and second 20-bit data fields of a 40-bit word.
D*nn* = HIPPI data bit
P*n* = HIPPI parity bit
F0, F1 = REQUEST, BURST, and PACKET encoding (see 5.4 and table 2)
M0, M1 = Submultiplexed CONNECT, READY, and Overhead signals (see 5.5)

Table 2 – REQUEST, PACKET and BURST coding in F0 and F1

HIPPI-PH signals			Code		
REQUEST	PACKET	BURST	F1	F0	State
0	0	0	0	0	Idle
1	0	0	0	1	Request
1	1	0	1	0	Packet
1	1	1	1	1	Burst
0	0	1	0	0	Idle
0	1	0	0	0	Idle
0	1	1	0	0	Idle
1	0	1	0	0	Idle

5.3 Encoding M0, M1 with CONNECT, READY, and OH*n*

The M0 bits and M1 bits carry several lower-bandwidth signals multiplexed together. Table 3 shows the signals, and their relative 40-bit words. An example circuit to generate the M0 and M1 signals is described in annex A.1 and shown in figure A.1. This function is called the SUBMUX in figure 1.

Table 3 – M0, M1 contents

Relative 40-bit word	MO contents	M1 contents
0	READY a	CONNECT a
1	READY a	CONNECT a
2	READY a	CONNECT a
3	OH5	OH1
4	READY b	CONNECT b
5	READY b	CONNECT b
6	READY b	CONNECT b
7	OH6	OH2
8	READY c	CONNECT c
9	READY c	CONNECT c
10	READY c	CONNECT c
11	OH7	OH3
12	READY d	CONNECT d
13	READY d	CONNECT d
14	READY d	CONNECT d
15	OH8 (Alt 0/1)	OH4

NOTE 1 – A pair of 20-bit data fields are transferred over a link every 40 ns, corresponding to the 25 MHz HIPPI-PH CLOCK signal. For example, D0-D31, P0-P3, REQUEST, PACKET, BURST, M0 and

Copyright International Organization for Standardization
Provided by IHS under license with ISO
No reproduction or networking permitted without license from IHS
Not for Resale

M1, are transmitted every 40 ns. At relative 40-bit word 0, M0 would have the first sample of "READY a", 40 ns later (relative 40-bit word 1) M0 would have the second "READY a", at 80 ns (relative 40-bit word 2) M0 would have the third "READY a", at 120 ns (relative 40-bit word 3) M0 would have the OH5 signal, etc. Relative 40-bit word 0 is not synchronised with any specific HIPPI-PH signal combination or transition, i.e., its location is arbitrary.

Each of the three adjacent CONNECT or READY bits (e.g. READY a, READY a, and READY a) shall be transmitted with the same value.

NOTE 2 – The HIPPI-PH CONNECT and READY signals travel in the reverse direction from the data and other HIPPI-PH signals, without a reference clock or checksum. To improve the reliability of the CONNECT and READY signals in HIPPI-Serial, they are sent three times (e.g. the three READY a's) and spaced 40 bits apart in the serial stream. Majority voting logic at the receiver will correct most of the serial steam M0 and M1 errors associated with the CONNECT and READY signals.

5.3.1 OH*n* (Overhead bits)

Table 4 lists the Overhead bits. If optional Overhead bits are used, their functions shall be as specified in table 4. If an optional function is not used, then its bit shall be transmitted as the default value shown in table 4. The OH8 bit shall be an alternating 1/0 pattern to provide framing for the Overhead bit stream.

Table 4 – Overhead bit (OH*n*) functions

OH Bit	Default Value	Opt/ Man	Function
OH1	0	Opt	Link Status and Control
OH2	0	Opt	Asynchronous channel
OH3	0	Opt	Asynchronous channel
OH4	0	Opt	Reserved
OH5	0	Opt	Reserved
OH6	0	Opt	Vendor unique
OH7	1	Opt	Vendor unique
OH8	1/0	Man	Framing (alternate 1/0)
OH = Overhead Opt = Optional Man = Mandatory			

OH bits 1 through 7 shall not mimic OH8. OH bits 1 through 7 shall each transmit a minimum of four consecutive bits of the same state in every 8-time slot period (5,12 µs).

NOTES

1 Limiting the OH2 through OH7 bandwidth to a maximum of 195 kHz will meet this criteria. OH1 already meets the four consecutive bit criteria.

2 The optional functions assigned seem appropriate for HIPPI-Serial Extenders as described in annex D, but may not be appropriate for HIPPI-Serial integrated in a workstation.

5.3.2 Overhead bit OH1 encoding

Table 5 defines the functions carried in optional Overhead bit 1 (OH1). Like M0 and M1, OH1 carries lower bandwidth signals multiplexed in time slots. If an optional function of OH1 is not used, then the default value shown in table 5 shall be transmitted in that OH1 time slot.

Table 5 – Overhead bit 1 (OH1) coding

Time Slot	Default Value	Opt/ Man	Function
0	1	Man	Framing
1	1	Man	Framing
2	1	Man	Framing
3	1	Man	Framing
4	0	Man	Framing
5	0	Opt	RL: Remote loopback
6	0	Opt	PP: Parallel Parity Error
7	0	Opt	SP: Serial Parity Error
Opt = Optional Man = Mandatory when OH1 is used			

RL: Remote Loopback - (Optional) If one end of a link desires the other end to go into remote loopback, it shall transmit bit RL as a 1. When RL is received as a 1, the receiving node should go into remote loopback. When in remote loopback, all data received shall be echoed back to the other end of the link, including the RL signal itself. (This will acknowledge that the link is in remote loopback, and will allow the echoed data to be checked for errors.) RL is a level sensitive, static signal. As long as it is 0, the link operates normally. As long as it is received as a 1, the node should echo all received data. However, RL should be filtered to prevent infrequent bit errors from falsely enabling

Copyright International Organization for Standardization
Provided by IHS under license with ISO
No reproduction or networking permitted without license from IHS
Not for Resale

loopback. When an end initiates remote loopback, it shall not go into remote loopback upon receiving RL = 1. For recommended implementations of loopback, refer to annex D.2.

PP: Parallel Parity Error - (Optional) Any parity errors detected on the Source HIPPI-PH data should be flagged by transmitting PP as a 1. PP shall be stretched to between 6 µs and 9 µs to guarantee transmission over the link. The status of PP should be made available at both the local and remote ends of the link. Persistent parallel parity errors indicate a problem with the HIPPI-PH Source port.

SP: Serial Parity Error - (Optional) The parity of the HIPPI-PH data should be checked once again as it is delivered from the XDEMUX in figure 1 to the HIPPI-PH Destination. An error at this point should be flagged by setting SP of the transmit link to a 1. The status of SP should be made available at the local end of the link, and it should be transmitted back to the remote node if a duplex system is in use. SP shall be stretched to between 6 µs and 9 µs to guarantee transmission over the link. Assuming the transmitted Parallel Parity Error signal (PP) is 0, persistent received Serial Parity Errors (SP = 1) indicate a problem with the serial transmit portion of the link.

5.3.3 Overhead bits OH2, OH3 encoding

When implemented, OH2 and OH3 provide 195 kBaud streams that may be used for end-to-end voice or data signalling separate from HIPPI-PH traffic. Each OH2 and OH3 value transmitted shall cover at least eight time slots, i.e., at least 5,12 µs. When implemented, OH2 and OH3 shall be transmitted as a 1 when there is no other data to be transmitted.

5.4 Converting parallel data to serial

Converting from parallel to serial occurs in the Transmitter Link Interface (TLI) functional unit shown in figure 1. Table 6 defines the 24-bit frames that will be serialised by the TLI.

The bits in table 6 shall be transmitted in a left to right sequence (i.e., B0 shall be transmitted first; C3 transmitted last). The data shall be transmitted in a non-return to zero fashion (i.e., 1 = light on, 0 = light off).

The Link Control functional unit controls the types of frames transmitted with the signals:

SEND_DATA: Transmit Data Frame

SEND_FF0: Transmit Fill Frame 0s

SEND_FF1: Transmit Fill Frame 1s

DC balance shall be achieved by keeping the number of 1s transmitted as close as possible to the number of 0s transmitted. A running count shall be kept of the number of 1s and 0s transmitted in the serial stream, counting the DISPARITY counter up for each 1 transmitted, and counting down for each 0 transmitted. The initialisation point for the DISPARITY counter shall be when SEND_FF0 transitions from true to false.

NOTE – The DISPARITY counter can be implemented with an up/down counter with a range of plus or minus 31.

5.4.1 Transmit Data Frame

When SEND_DATA = true, and there is a 20-bit data field to transmit, then the TLI shall append a 4-bit coding nibble to the 20-bit data field; if FLAG = 0 then coding nibble = 1101, if FLAG = 1 then coding nibble = 1011.

DC balance shall be achieved by keeping the number of 1s transmitted as close as possible to the number of 0s transmitted. As with the DISPARITY counter, the number of 1s and 0s in each 24-bit Data Frame to be sent shall be counted in the NEW counter. The NEW counter shall be initialised for each new 24-bit Data Frame; it is not a running count of all 24-bit Data Frames transmitted. If the sign of the NEW counter is the same as the sign of the DISPARITY counter, then the bits in the 24-bit Data Frame shall be inverted before being transmitted serially. For example, compare the first two rows in table 6.

Copyright International Organization for Standardization
Provided by IHS under license with ISO
No reproduction or networking permitted without license from IHS
Not for Resale

5.4.2 Transmit Fill Frame 0

When SEND_FF0 = true, the TLI shall transmit 24-bit Fill Frame 0s (FF0) as defined in table 6. Since FF0 has an equal number of 1s and 0s, it is already DC balanced. FF0s are used during a link reset operation. (See 7.3.1.)

5.4.3 Transmit Fill Frame 1

When SEND_FF1 = true, the TLI shall transmit 24-bit Fill Frame 1s (FF1) as defined in table 6. SEND_FF1 = true occurs during a link reset operation. (See 7.3.2.)

Note that in table 6 there are two Fill Frame 1s, FF1H and FF1L. FF1H contains more 1s than 0s, and FF1L contains more 0s than 1s. To achieve DC balance FF1Ls shall be transmitted when the sign of the DISPARITY counter is positive, and FF1Hs shall be transmitted when the sign of the DISPARITY counter is negative.

5.5 Transmit section clock signals

The serial data stream shall be transmitted at a rate of 48 times the HIPPI-PH CLOCK rate, i.e., 48 x 25 (± 0,01%) MBaud = 1,2 GBaud. The TLI shall set TLI_UNLOCK = 0 when the TLI clock multiplier is stable and locked.

Table 6 – 24-bit frame structure

24-bit frame					Interpretation
Data field	Coding nibble				
B0 B19	C0	C1	C2	C3	
XXXXXXXXXXXXXXXXXXXX	1	1	0	1	Data Frame, FLAG = 0, Data True
$\overline{\text{XXXXXXXXXXXXXXXXXXXX}}$	0	0	1	0	Data Frame, FLAG = 0, Data Inverted
XXXXXXXXXXXXXXXXXXXX	1	0	1	1	Data Frame, FLAG = 1, Data True
$\overline{\text{XXXXXXXXXXXXXXXXXXXX}}$	0	1	0	0	Data Frame, FLAG = 1, Data Inverted
11111111110000000000	0	0	1	1	**Fill Frame 0 (FF0)**
11111111111000000000	0	0	1	1	**Fill Frame 1, Heavy (FF1H)**
11111111100000000000	0	0	1	1	**Fill Frame 1, Light (FF1L)**
XXXXXXXXX10XXXXXXXXX	1	1	0	0	**Reserved Frame**
XXXXXXXXX01XXXXXXXXX	0	0	1	1	**Reserved Frame**
XXXXXXXXX0XXXXXXXXXX	1	1	0	0	**Frame Error**
XXXXXXXXX11XXXXXXXXX	1	1	0	0	Frame Error
XXXXXXXXXXXXXXXXXXXX	1	0	1	0	Frame Error
XXXXXXXXXXXXXXXXXXXX	0	1	0	1	Frame Error
XXXXXXXXXXXXXXXXXXXX	X	0	0	X	Frame Error (no Master Transition)
XXXXXXXXXXXXXXXXXXXX	X	1	1	X	Frame Error (no Master Transition)

Copyright International Organization for Standardization
Provided by IHS under license with ISO
No reproduction or networking permitted without license from IHS
Not for Resale

6 Receive section

The receive section consists of the Receiver Link Interface (RLI), XDEMUX, SUBDEMUX, and Decode functional units shown in the lower portion of figure 1. The receive section decodes the serial stream, frames the signals, checks for errors, and outputs parallel signals.

6.1 Receive section clock signals

Note that the FF0 pattern in table 6 results in a square wave with 12 consecutive 1s followed by 12 consecutive 0s. Also notice that a 1 to 0, or 0 to 1, transition, called the Master Transition, occurs at the coding nibble bits C1 to C2. The Master Transition shall be used for synchronising the Master Transition Clock, and shall be used to frame groups of 24 bits into the 24-bit frames shown in table 6. The Master Transition Clock shall be locked to the Master Transitions in the received serial data stream, e.g. with a phase locked loop. The received serial data stream shall be strobed at a rate of 24 times the Master Transition Clock rate to recover the bits.

NOTES

1 The Master Transition Clock rate is initially derived from the FF0 square wave during the reset operation. (See 7.3.1.) When passing data, the Master Transition Clock rate is maintained by synchronising to the Master Transition occurring every 24 bits.

2 The Master Transition Clock should have the same long-term tolerance as the HIPPI-PH CLOCK signal since it is directly derived from it. HIPPI-PH specifies for the transmitted CLOCK signal a tolerance of ± 0,01%

3 The Master Transition Clock rate is twice the HIPPI-PH CLOCK rate (i.e., 50 MHz). The bit clock rate for strobing the received serial data stream operates at 24 times that rate (i.e., 1,2 GHz).

4 A clock recovery circuit for 50 MHz should be simpler than for a 1,2 GHz. A simple, easily integrated, Phase Locked Loop (PLL) clock recovery mechanism utilising this Master Transition is described in references [1-5] in annex E.

6.2 Operating on the 24-bit frames

The RLI shall signal the type of 24-bit frame received based on the values in table 6. Only one of the following signals shall be true for each 24-bit frame received.

DATA_DET: a Data Frame was detected

FF0_DET: an FF0 was detected

FF1_DET: an FF1H or FF1L was detected

FE_DET: a Frame Error was detected

Reserved Frames should never be sent or received, but future enhancements to HIPPI-Serial may define uses for the reserved frames. Any reserved frames received shall be discarded without interpretation. Violations of this guideline may result in loss of upward compatibility.

6.2.1 Receiving Data Frames

A 24-bit frame with a binary coding nibble value of 1101, 0010, 1011, or 0100 (i.e., the first four rows of table 6) is called a Data Frame. If the coding nibble of a Data Frame indicates that the data is inverted, then the 20-bit data field shall be inverted before being passed to the XDEMUX. The FLAG signal shall also be derived from the coding nibble as defined in table 6.

6.2.2 Receiving Fill Frame 0 (FF0)

Receiving an FF0 indicates that a reset operation is underway. (See 7.3.1.) The REQUEST, PACKET, BURST, signals to the HIPPI-PH Destination, and the READY and CONNECT signals to the HIPPI-PH Source, shall be set to zeros. A parity error shall be forced in the data sent to the HIPPI-PH Destination.

NOTE – A simple way to force parity errors in a given HIPPI word is to set all of the data and parity bits to the HIPPI-PH Destination to 0. Because HIPPI-PH uses odd parity, all four parity bits will appear to have parity errors.

6.2.3 Receiving Fill Frame 1 (FF1)

Receiving a FF1 indicates that a reset operation is underway. (See 7.3.2.) The REQUEST, PACKET, BURST, signals to the HIPPI-PH Destination, and the READY and CONNECT signals to the HIPPI-PH Source, shall be set to zeros. A parity error shall be forced in the data sent to the HIPPI-PH Destination.

Copyright International Organization for Standardization
Provided by IHS under license with ISO
No reproduction or networking permitted without license from IHS
Not for Resale

6.2.4 Receiving Frame Errors

A Frame Error, FE_DET, as defined in table 6, shall cause the following:

– A parity error shall be forced in the data sent to the HIPPI-PH Destination.

– The HIPPI-PH REQUEST, PACKET, and BURST signals to the HIPPI-PH Destination shall be maintained at their previous values. See annex C.2 for a discussion of ramifications of maintaining these signals at the previous value.

– The M0/M1 time slot shall be advanced, and the functions encoded in M0 and M1 shall be maintained at their last value.

– Two consecutive Frame Errors shall cause the link to be reset. (See 7.3 for reset details.)

6.2.5 OH8 framing errors

If the received OH8 signal does not conform to the alternating 1/0 pattern specified in 5.3.1, then the SUBDEMUX shall search for OH8. The search for OH8 shall initiate when not less than three or more than four consecutively received OH8 bits are the same state.

During the search, all the OH1 through OH7 bits at the output of the SUBDEMUX, and the CONNECT and READY signals to the HIPPI-PH Source shall be held to their last value.

6.3 Decoding 20-bit data fields

The 20-bit data fields signalled by DATA_DET = 1 are processed by the XDEMUX functional unit shown in figure 1. The 20-bit data field with FLAG = 0, and the following 20-bit data field with FLAG = 1 shall be combined to form a 40-bit words. The 40-bit words shall be decoded as defined in table 1.

As specified in 4.5.2, 32-bit (800 Mbit/s) HIPPI-Serial variants use only one link as shown in figure 1, and shown as link "a" in table 1 (i.e., the 40-bit words correspond to HIPPI data bits D00 - D31).

As specified in 4.5.2, 64-bit (1 600 Mbit/s) HIPPI-Serial variants use two separate physical links in parallel; called links "a" and "b" in table 1. The serial data stream on fibre "a" carries HIPPI data bits D00 - D31. The separate serial data stream on fibre "b" carries HIPPI data bits D32 - D63. The F0 and F1 signals present in both the "a" and "b" links shall be used to time synchronise the two links (i.e., get the right D00 - D31 and D32 - D63 together). The serial data streams on links "a" and "b" shall be time aligned, by matching or trimming the cable lengths, so that there is ≤ 22 ns between F0 on cable "a" and F0 on cable "b".

6.4 Decoding F0, F1 into REQUEST, PACKET, and BURST

The F0 bits and F1 bits of the 40-bit word shall be decoded into the REQUEST, PACKET, and BURST signals as defined in table 2. The REQUEST, PACKET and BURST signals shall be transmitted to the HIPPI Destination on the same CLOCK used to transmit the HIPPI data signals of that 40-bit word. This function is done in the Decode functional unit of figure 1.

64-bit (1 600 Mbit/s) HIPPI-Serial variants shall use only the F0 and F1 signals from the "a" link to decode the HIPPI-PH REQUEST, PACKET, and BURST signals.

6.5 Decoding M0, M1 into CONNECT, READY, and OH*n*

The M0 bits and M1 bits of the 40-bit word shall be used to decode the CONNECT, READY, and Overhead bits as defined in table 3. Note that multiple occurrences of the M0 and M1 bits are required to construct the CONNECT and READY signals. A four-HIPPI-PH-CLOCK-cycle wide READY indication shall be transmitted to the HIPPI Source if two out of three READY "n" signals = 1, where n = a, b, or c. CONNECT signals shall be processed in the same manner. The CONNECT and READY signals, without further processing, shall meet the requirements of ISO/IEC 11518-1, HIPPI-PH (i.e., be careful of their relative timing on the transmit side). There is no requirement that CONNECT or READY be passed to the HIPPI Source with the same CLOCK used to transfer the HIPPI data signals of that 40-bit word. An example circuit to decode the M0 and M1 signals is described in annex A.2 and shown in figure A.2. This function is called the SUBDEMUX in figure 1.

NOTE – The bits corresponding to M0 and M1 on link "a" are held to zero on link "b". This ensures that a 64-bit (1 600 Mbit/s) HIPPI-Serial variant will not operate if the cables are reversed (i.e., CONNECT and READY will never be true).

Copyright International Organization for Standardization
Provided by IHS under license with ISO
No reproduction or networking permitted without license from IHS Not for Resale

7 Link Control

7.1 Link Control output signals

The Link Control functional unit is shown in figure 1. There are identical Link Control functional units at the local and remote ends of a link. For the purposes of describing some of the HIPPI-Serial operations, the following logical output signals from the Link Control functional unit are assumed:

SEND_DATA - Signals the TLI to transmit Data Frames. (See 5.4.1.)

SEND_FF0 - Signals the TLI to transmit FF0. (See 5.4.2.)

SEND_FF1 - Signals the TLI to transmit FF1H or FF1L. (See 5.4.3.)

7.2 Link Control input signals

Likewise, the following logical input signals to the Link Control functional unit are assumed:

DATA_DET - Indicates that the RLI has detected a Data Frame. (See 6.2.1.)

FF0_DET - Indicates that the RLI has detected a Fill Frame 0 (FF0). (See 6.2.2.)

FF1_DET - Indicates that the RLI has detected a Fill Frame 1 (FF1H or FF1L). (See 6.2.3.)

FE_DET - Indicates that the RLI has detected a Frame Error. (See 6.2.4.)

TLI_UNLOCK – Indicates that the clock multiplier in the TLI is not locked. (See 5.5.)

Single bit errors in the received serial stream can cause FF0s, FF1s, and Data Frames to be confused. Therefore, FF0, FF1, and FE_DET shall only be considered true when two consecutive frames give the same indication. In this specification, this two consecutive indications is called a debounced signal.

7.3 Link reset

The links shall be reset at power-on, and when two consecutive Frame Errors are detected as specified in 6.2.4. The Link reset state diagram, as shown in figure 2, consists of three states. The states are uniquely defined by the serial data stream contents transmitted by the TLI when the Link Control functional unit is in that state.

The conditions to leave each state are shown next to the arrows between states. For clarity, the conditions that cause the Link Control functional unit to remain in a given state are shown on an arrow that loops back to the same state.

32-bit, (800 Mbit/s) simplex, and dual-simplex, configurations use a pair of links, and 64-bit (1 600 Mbit/s) HIPPI-Serial variants use two link-pairs. Each pair of links independently executes this same reset procedure.

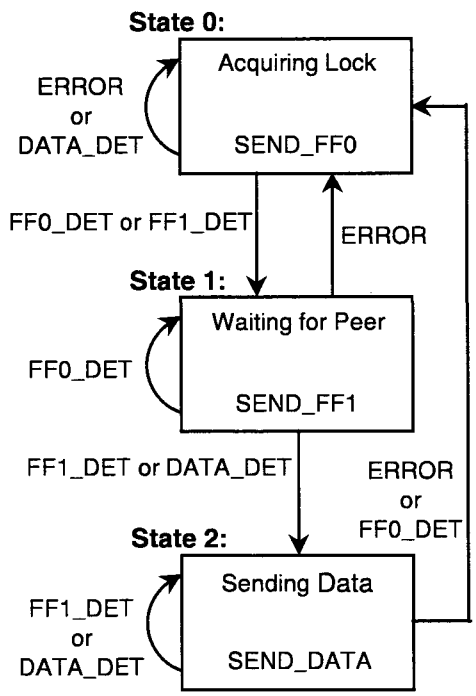

Figure 2 – Link reset state diagram

Copyright International Organization for Standardization
Provided by IHS under license with ISO .
No reproduction or networking permitted without license from IHS Not for Resale

7.3.1 State 0: Acquiring Lock

In this State the TLI is transmitting a 50 MHz square wave (i.e., FF0) to initialise the clock recovery circuitry at the remote end RLI, and the local RLI is locking onto a similar incoming signal. All of the control signals to the HIPPI ports shall be held deasserted, and the control signals from the HIPPI ports shall be ignored. After the transmit clock is stable and locked (i.e., TLI_UNLOCK = 0) the TLI shall transmit FF0 across the link for at least 128 frame times (i.e., 2,56 µs) . The Link Control functional unit shall go to State 1 when its local RLI has achieved lock and framing (i.e., it detects debounced FF0s or FF1s, and no FE_DETs, for at least 128 frame times).

7.3.2 State 1: Waiting for Peer

In this state the node is ready to go, but is waiting for the other end of the link. All of the control signals to the HIPPI ports shall be held deasserted, and the control signals from the HIPPI ports shall be ignored. The local TLI shall transmit FF1 to the other end of the link to signal that it is ready. The local node knows the other end of the link is not ready, because it is still receiving FF0. Upon receipt of debounced FF1s or Data Frames, it will know that the other end of the link is locked and ready to go. In that case the local node shall go to State 2.

7.3.3 State 2: Sending Data

In this state the TLI sends continuous Data Frames. The Link Control functional unit shall remain in this state indefinitely, until a debounced ERROR or FF0 is detected. In that case, the link shall return to State 0, and the reset procedure begins again.

NOTE – Once in State 2, SUBDEMUX synchronisation to OH8 (see 6.2.5) is required before the HIPPI-PH Source signals CONNECT and READY are active and data transmission can begin.

8 Serial optical interface

8.1 General specifications

Tables 7 to 9 include the relevant specifications for the optical interfaces and components for compatibility with HIPPI-Serial at both the long and short wavelengths. Optical 20% and 80% transition times shall be measured using a Fill Frame 0 (FF0) pattern.

8.1.1 Optical output interface

Jitter, rise and fall times, and the general laser transmitter pulse shape characteristics are specified in the form of a mask of the transmitter eye diagram. These characteristics include rise time, fall time, pulse overshoot, pulse undershoot, and ringing, all of which should be controlled to prevent excessive degradation of the receiver sensitivity. The parameters specifying the mask of the transmitter eye diagram are shown in figure 3.

Jitter, rise and fall times, and the mask of the eye diagram for the laser transmitters, shall be measured using a receiver with a fourth-order Bessel-Thompson transfer function that has a 3 dB of attenuation at the reference frequency (f_r) of:

$$f_r = 0{,}75 \times \text{Bit rate}$$

NOTE – This filter is not intended to represent the noise filter used within an optical receiver but it is intended to provide a uniform measurement condition. A SONET OC-24, or a Fibre Channel 1062,5 MBaud, reference filter meets the necessary requirements when coupled to a wide band optical receiver.

8.1.2 Optical input interface

The receiver shall operate at a BER $\leq 10^{-12}$ over the link's lifetime and temperature range when the input power falls in the range given in tables 7 to 9 and when driven by a data stream output that fits the specified eye diagram mask through a cable plant as specified in tables 7 to 9. The measurement shall be made by the methods of IEC 61280-2-1

Copyright International Organization for Standardization
Provided by IHS under license with ISO
No reproduction or networking permitted without license from IHS Not for Resale

The minimum and maximum values of the average received power in dB give the input power range to maintain a BER ≤ 10^{-12}. These values take into account power penalties caused by the use of a transmitter with worst-case combination of transmitter spectral, extinction ratio, and pulse shape characteristics. The receiver sensitivity does not include power penalties associated with dispersion, jitter, or reflections from the optical path; these effects are specified separately in the allocation of maximum optical path penalty. (See annex B.5 for loss budget examples.)

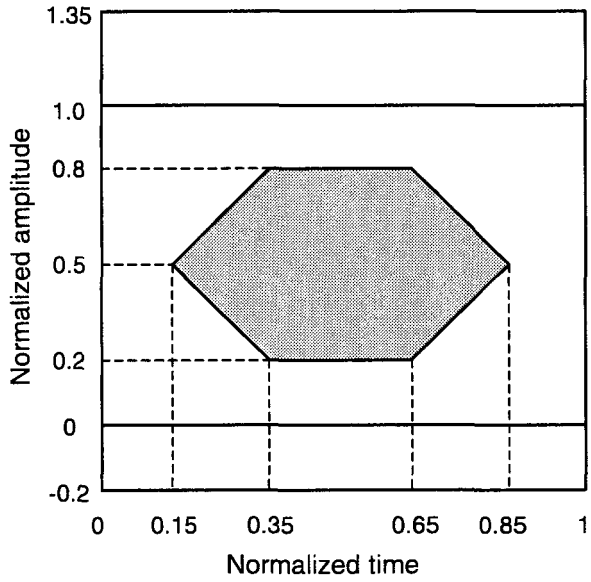

Figure 3 – Transmitter eye diagram mask

8.2 Fibre type

The single-mode optical fibre shall conform to ITU-T G.562. The multimode optical fibre may be either 50 µm or 62,5 µm. Mixing 50 µm and 62,5 µm optical fibre in a single link is not allowed.

8.3 Optical connectors

Duplex SC connectors, as defined in ISO/IEC 16145-111, is recommended. FC/PC and ST connectors are optional.

Table 7 – General long wavelength optical specifications over single-mode fibre

System rate, length, and BER	
Signalling rate (see 5.5)	1,2 GBaud
Distance	≤ 10 km
Optical fibre	Single mode
BER (max.)	1×10^{-12}
Optical transmitter (at output connector)	
Transmitter type	Laser
Centre wavelength	(1 285 to 1 330) nm
Maximum spectral width (RMS)	3 nm
Mean launch power	(–9 to –6) dBm
Allowable extinction ratio	(8 to 20) dB
Optical 20% to 80% transition times	≤ 375 ps
RIN (max.)	–116 dB/Hz
Optical input to optical receiver	
Received optical power	(–22 to –6) dBm
Receiver return loss	≥ 40 dB
Optical path	
Optical fibre core diameter	(8 to 10 µm)
Zero dispersion wavelength	(1 310 ± 10) nm
Maximum dispersion	3,5 ps/(nm × km)
Slope at zero dispersion	0,095 ps/(km × nm^2)
Maximum cable loss	0,5 dB/km
Mean fibre plant attenuation (DC)	(0 to 9) dB
Discrete connector return loss	≥ 30 dB
Recommended connector	Duplex SC
Optional connectors	FC/PC or ST

Copyright International Organization for Standardization
Provided by IHS under license with ISO
No reproduction or networking permitted without license from IHS
Not for Resale

Table 8 – General long wavelength optical specifications over multimode fibre

System rate, length, and BER	
Signalling rate (see 5.5)	1,2 GBaud
Distance [1]	≤ 1 km
Optical fibre	(50 and 62,5) µm multimode
BER (max.)	1×10^{-12}
Optical transmitter (at output connector)	
Transmitter type [1]	Laser
Centre wavelength	(1 285 to 1 330) nm
Maximum spectral width (RMS)	3 nm
Mean launch power	(–9 to –3) dBm
Allowable extinction ratio	(8 to 20) dB
Optical 20 to 80% transition times	≤ 375 ps
RIN (max.)	–116 dB/Hz
Optical input to optical receiver	
Received optical power	(–22 to –6) dBm
Receiver return loss	≥ 40 dB
Optical path	
Optical fibre core diameter	(50 or 62,5) µm
Minimum bandwidth [1]	1 000 MHz • km
Mean fibre plant attenuation (DC)	(0 to 9) dB
Discrete connector return loss	≥ 20 dB
Recommended connector	Duplex SC
Optional connectors	FC/PC or ST

[1] It has been shown that operation at up to 1 km can be achieved by using a pigtailed laser and multimode fibre with a minimum bandwidth of 450 MHz · km. The single-mode pigtail has the effect of stripping all but one mode, significantly increasing the effective fibre bandwidth. (See reference [6] in Annex E.)

Table 9 – General short wavelength optical specifications

System rate, length, and BER	
Signalling rate (see 5.5)	1,2 GBaud
Distance: 62,5 µm optical fibre 50 µm optical fibre	 (2 to 200) m (2 to 500) m
BER (max.)	1×10^{-12}
Optical transmitter (at output connector)	
Transmitter type	Laser
Centre wavelength	(770 to 860) nm
Maximum spectral width (RMS)	4 nm
Mean launch power[1]	(–5 to –10) dBm
Extinction ratio (min.)	8 dB
Optical 20 to 80% transition times	≤ 375 ps
RIN (max.)	–116 dB/Hz
Eye opening at BER = 1×10^{-12}	57% UI
Deterministic jitter	20% UI
Random jitter	not applicable
Optical input to optical receiver	
Received optical power	(–16 to –0) dBm
Receiver return loss	≥ 12 dB
Optical path	
Optical fibre core diameter	(50 or 62,5) µm
Minimum bandwidth at 780 nm: 62,5 µm optical fibre 50 µm optical fibre	 160 MHz • km 500 MHz • km
Fibre plant attenuation (max.)	4 dB
Discrete connector return loss	≥ 20 dB
Recommended connector	Duplex SC
Optional connectors	FC/PC or ST

[1] Maximum launched power may exceed –5 dBm as long as launched power does not exceed 0 dBm and complies with applicable laser safety standards.

Copyright International Organization for Standardization
Provided by IHS under license with ISO
No reproduction or networking permitted without license from IHS Not for Resale

Annex A
(informative)

Implementation suggestions

A.1 Example SUBMUX circuit

Figure A.1 shows a block diagram of an example SUBMUX circuit used to generate the M0 and M1 signals. The pulse width control circuits guarantee that the three adjacent CONNECT and READY bits are identical, and that only legal transitions on these signals are transmitted. A divide by 32 (0,8 MHz) signal from the 25 MHz divider circuit is used for the alternating 1/0 OH8 framing signal.

A.2 Example SUBDEMUX circuit

Figure A.2 shows a block diagram of an example SUBDEMUX circuit used to decode the received M0 and M1 signals. The Sync Control and Compare circuits are used to detect the alternating 1/0 pattern on OH8, thereby properly framing the Overhead bits. The circuitry performs a majority vote on the three adjacent bits to produce a CONNECT or READY signal which is immune to single bit errors. Before delivery to the local HIPPI-PH Source port, the CONNECT and READY signals should be stretched to at least 4 HIPPI-PH CLOCK periods to conform to ISO/IEC 11518-1, HIPPI-PH, 7.7.

A.3 TLI and RLI availability

Hewlett-Packard part number HDMP-1012 is an example of a suitable TLI, and part number HDMP-1014 is an example of a suitable RLI and Link Control. This information is given for the convenience of the users of this standard and does not constitute an endorsement of these products by the publisher of this standard.

Copyright International Organization for Standardization
Provided by IHS under license with ISO
No reproduction or networking permitted without license from IHS
Not for Resale

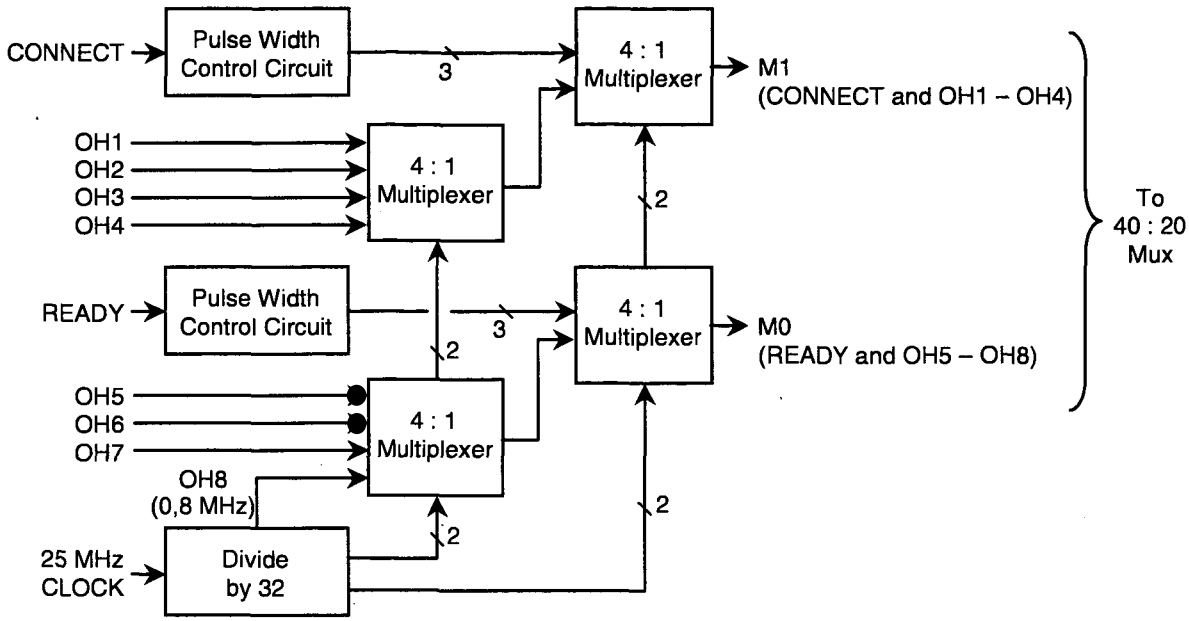

Figure A.1 – SUBMUX block diagram

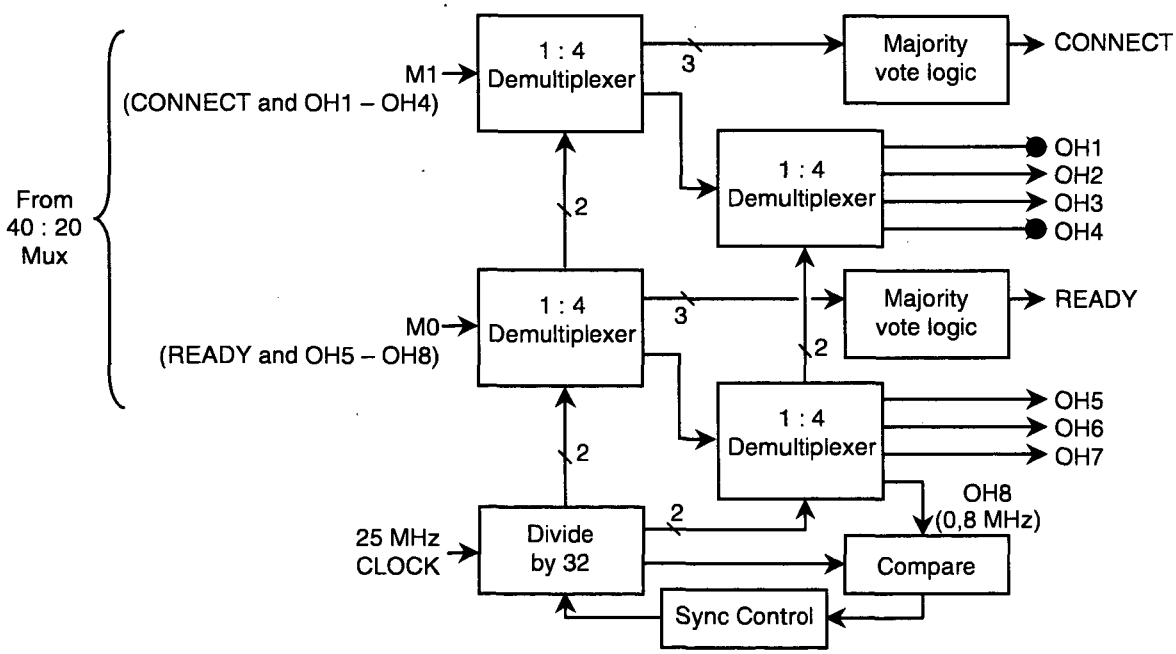

Figure A.2 – SUBDEMUX block diagram

Copyright International Organization for Standardization
Provided by IHS under license with ISO
No reproduction or networking permitted without license from IHS
Not for Resale

Annex B
(informative)

Additional optical information

B.1 Eye measurements with an oscilloscope

The eye diagram parameters should be directly measured from the display of an oscilloscope triggered off of the source node's serial transmit bit clock. An oscilloscope bandwidth of at least 10 GHz should be used. The scope should be placed in infinite persistence mode and a total of approximately 20 million samples accumulated. This would require (5 to 10) minutes on typical sampling oscilloscopes. All eyes should be measured while the link is transmitting random data.

The optical receiver used to measure these eyes should have a sensitivity of better than –25 dBm at a bit error rate of 10^{-12} and a linear frequency response bandwidth of at least 5 GHz.

The eye measurements should be performed with a 2^{23}–1 bit Pseudo-Random Bit Sequence. This sequence can be used directly, or can be encoded in the method presented in this document. Encoding can be accomplished by converting the 2^{23}–1 PRBS serial sequence to a sequence of 32 bit words, plus 4 parity bits, and then inputting them to the HIPPI-Serial inputs as normal HIPPI input data.

B.2 Optical power

The optical power at the fibre connectors should be measured using a calibrated power meter with Fill Frame 0 being transmitted. This corresponds to a 50 MHz square wave test signal.

B.3 Optical spectrum

The centre wavelength and spectral width of the transmitted optical signal should be measured using an optical spectrum analyser. The patch cable used to couple the light from the fibre connector to the analyser should be short to minimise spectral filtering by the patch cable. A 2^{23}–1 PRBS should be used as the test pattern for testing the optical spectrum.

B.4 Eye safety

The maximum coupled power limits within this specification comply with the present IEC-825 standard for Class 1 eye safety.

B.5 Loss budget examples

Example loss budgets are given for typical configurations, and the basis for the losses are included.

B.5.1 Typical connector losses

For the loss budget examples, typical specifications for single-mode connectors are assumed to be:

Mean connector loss	≤ 0,25 dB
Standard deviation of connector loss	0,1 dB
Minimum optical return loss	30 dB

It is recommended that in a 10 km single-mode link no more than eight connectors be used between the optical transmitter and optical receiver .

Typical specifications for multimode connectors are:

Mean connector loss	≤ 0,11 dB
Standard deviation of connector loss	0,15 dB
Minimum optical return loss	20 dB

It is recommended that in a multimode link no more than eight connectors be used between the optical transmitter and optical receiver.

Copyright International Organization for Standardization
Provided by IHS under license with ISO
No reproduction or networking permitted without license from IHS
Not for Resale

B.5.2 Splice losses

For the loss budget examples, the following is offered as the basis for the splice losses. It is assumed that a cable splice will be located at each end of the optical fibre plant and that there will be one splice per kilometre of cable. Two splices are assumed to be required for future optical fibre plant maintenance. The total number of splices in a system will then be:

Number of splices = 4 + (link length in km)

The characteristic of the system single-mode splices are assumed to be:

Mean splice loss	≤ 0,15 dB
Standard deviation of splice loss	0,1 dB

The characteristic of the system multimode splices are assumed to be:

Mean splice loss	≤ 0,08 dB
Standard deviation of splice loss	0,05 dB

The maximum number of splices in a multimode link is six.

B.5.3 Single mode loss budget example

+ Minimum laser launch power	–9 dBm
– Mean Plant Attenuation (DC) for 10 km system	9 dB
– Three standard deviations of system loss: $3\sqrt{N\sigma^2}$ where N is the number of connectors/splices	1,4 dB
– Optical receiver sensitivity	–22 dBm
= Unallocated for margin and penalties	+2,6 dB

B.5.4 62,5 µm loss budget example

+ Minimum laser launch power	–10 dBm
– Maximum optical fibre loss (200 m at 4 dB/km)	0,8 dB
– Mean connector loss (8 each)	0,9 dB
– Mean splice loss (6 each)	0,5 dB
– 3σ loss	1,4 dB
– Optical receiver sensitivity	–16 dBm
= Unallocated for margin and penalties	+2,4 dB

B.5.5 50 µm loss budget example

+ Minimum laser launch power	–10 dBm
– Maximum optical fibre loss (500 m at 4 dB/km)	2,0 dB
– Mean and 3σ loss available for splices and connectors	2,0 dB
– Optical receiver sensitivity	–16 dBm
= Unallocated for margin and penalties	+2,0 dB

NOTE – The 2,0 dB Mean and 3σ loss comes from the difference between the total allowable cable plant loss (4 dB) and the fibre attenuation (0,5 dB × 4 dB/km = 2,0 dB).

B.5.6 Multimode with 1 300 nm laser loss budget

For the case of 1 300 nm lasers and multimode optical fibre, the link is dispersion limited to 1 km and loss is a secondary consideration.

Copyright International Organization for Standardization
Provided by IHS under license with ISO
No reproduction or networking permitted without license from IHS
Not for Resale

Annex C
(informative)

HIPPI-PH signal relationships

C.1 REQUEST, PACKET, and BURST

The HIPPI-PH signalling protocol specifies only four legal states of the REQUEST, PACKET, and BURST signals:

- The IDLE state is defined as REQUEST, PACKET, and BURST, all deasserted.
- The REQUEST state is when only REQUEST is asserted. This occurs when the Source is trying to make a connection.
- The PACKET state corresponds to both REQUEST and PACKET asserted, and BURST deasserted. This signifies the beginning of a packet, or the gap between successive BURST states.
- The BURST state is when REQUEST, PACKET, and BURST are all asserted. This occurs when the link is transmitting a burst of data.

All other combinations of the REQUEST, PACKET and BURST signals are defined as illegal in HIPPI-PH and are assigned to IDLE. Thus a HIPPI Source sequence error will cause the REQUEST line to be deasserted, and the connection will have to be re-established at the HIPPI level. Note that this error does not cause the links to be reset.

C.2 Control signals during errors

When Frame Errors (i.e., not Data Frames) are detected, the HIPPI-PH REQUEST, PACKET, BURST, CONNECT, and READY control signals to the HIPPI-PH port are maintained at their previous values.

In other words, the control signals should not change from what they were in the previous Data Frame. This action is important because on a Frame Error the control signals may be inverted or scrambled. It is undesirable for the HIPPI port to receive scrambled control signals.

Holding the HIPPI-PH control signals to their previous value on Frame Errors is quite robust. In general these control signals switch relatively infrequently, so they would naturally have their previous value at least 75% of the time. In addition, holding the control signals constant and forcing a parity error in the data to the HIPPI port will result in no error unless data was being transferred, or an error that the HIPPI port may detect as a sequence error.

The following cases show what will occur if a Frame Error is received when the HIPPI connection is in various states. In each case, REQUEST, PACKET, BURST, CONNECT, and READY are held in the state described. The issue is how the HIPPI-PH port will react, and what effect the parity error forced into the data will have. These descriptions refer to operations defined in ISO/IEC 11518-1, HIPPI-PH.

C.2.1 Case 1

No connection - REQUEST and CONNECT deasserted.

The HIPPI-PH Destination should not be affected by the occurrence of parity errors since there is no active connection.

C.2.2 Case 2

Connection in process - REQUEST asserted, CONNECT deasserted.

A parity error will be forced in the I-Field, but the Destination will only act on it if it occurs when the Destination is sampling the I-Field. Normally, the I-Field is read when REQUEST goes true. In that case the I-Field will be valid, as REQUEST can only transition on a Data Frame. In any case, if a parity error is detected in the I-Field, the I-Field should be sampled again, or the connection refused.

Copyright International Organization for Standardization
Provided by IHS under license with ISO
No reproduction or networking permitted without license from IHS
Not for Resale

C.2.3 Case 3

Connection complete, no packet in process - REQUEST and CONNECT asserted, PACKET deasserted.

The HIPPI-PH Destination should not be affected by the occurrence of parity errors since no data is being transferred.

C.2.4 Case 4

Connection complete, packet in process, no data moving - REQUEST, CONNECT and PACKET asserted, BURST deasserted.

The HIPPI-PH Destination should not be affected by the occurrence of parity errors since no data is being transferred.

C.2.5 Case 5

Starting a burst - REQUEST, CONNECT, and PACKET asserted, BURST transitions to asserted.

Since BURST will be held low, the burst will be shortened by one word. A bad LLRC should result. The data parity error that was forced will probably be ignored by the Destination HIPPI.

C.2.6 Case 6

Connection complete, passing data - REQUEST, CONNECT, PACKET, and BURST asserted.

A data parity error will be detected by the Destination HIPPI and any re-transmission will need to be requested by an upper-layer protocol.

C.2.7 Case 7

Connection complete, passing LLRC - REQUEST, CONNECT, and PACKET asserted, BURST transitions to deasserted.

The BURST signal will be held asserted, stretching the burst by one word, and a parity error will be forced into the data. If the next frame is a Data Frame, then the word following the true LLRC will be interpreted as the LLRC. This will almost certainly be in error. The HIPPI-PH Destination will see both the data parity error and a bad LLRC.

C.2.8 Case 8

Inter-packet gap - REQUEST and PACKET transition from true to false.

PACKET is required to be false at the destination for only one HIPPI clock cycle. Therefore, for the case of packets being transmitted at the maximum rate, it is possible to concatenate two packets, forming a single packet. This is an error that should be caught by a higher-layer protocol. The forced parity error will be ignored. If the PACKET spacing is greater than one HIPPI clock cycle, the HIPPI-PH Destination should not be affected by the occurrence of parity errors since no data is being transferred.

C.2.9 Case 9

A Frame Error occurs on some other HIPPI control signal transition

The HIPPI signal(s) will be displaced by one clock. In most cases this will not be a problem. Problems may be caught by the HIPPI-PH Destination checking for the timing relationships specified in ISO/IEC 11518-1, HIPPI-PH, 7.9.

Copyright International Organization for Standardization
Provided by IHS under license with ISO
No reproduction or networking permitted without license from IHS Not for Resale

Annex D
(informative)

HIPPI-PH Extender

A HIPPI-Serial Extender is an external unit that has a ISO/IEC 11518-1, HIPPI-PH, compliant port on one side, and HIPPI-Serial compliant port on the other side. For example, in figure 1, the HIPPI-PH signals on the left side of the figure would connect to another HIPPI-PH port with a copper twisted-pair cable. The Overhead bits would remain within the HIPPI-Serial Extender and not connect to the HIPPI-PH ports. The serial data streams on the right side would connect to another HIPPI-Serial unit.

HIPPI-Serial Extenders provide a communication facility that extends the physical range of HIPPI ports beyond the 25 M limitation imposed by the twisted-pair copper cables. Other than extended range, the user should see no difference in operation when using HIPPI-Serial either as an external Extender or integrated into a HIPPI node.

D.1 HIPPI-PH signals

The HIPPI-PH signals in figure 1 should fully comply with ISO/IEC 11518-1, HIPPI-PH, including the mechanical and electrical specifications as well as the signalling protocol.

D.1.1 INTERCONNECT signals

The INTERCONNECT signals from the HIPPI node to a HIPPI-Serial Extender are not used for any control functions, but may drive status indicators. The INTERCONNECT signals from a HIPPI-Serial Extender to a HIPPI node should be statically driven with 220 Ω resistors to V_{EE} as defined in 8.2.2 of ISO/IEC 11518-1, HIPPI-PH.

D.1.2 Shaping CONNECT and READY signals

Since a clock signal does not accompany the CONNECT and READY signals, using the internal clock of a Serial-HIPPI implementation to strobe the CONNECT and READY signals may result in internal signals wider or narrower than expected due to sampling as the signals are changing. As specified in 6.5, the CONNECT and READY signals should be shaped to be a minimum of four HIPPI-PH CLOCK cycles wide.

D.1.3 Losing READY indications

If the HIPPI Destination has a faster CLOCK than the Serial-HIPPI implementation, and the Destination sends long sequences of minimum width READY signals (i.e., continuous back-to-back eight-CLOCK-period READY indications) then there is the possibility of losing one in 5000 READY indications. Lost READY indications should not occur unless both conditions are met, *i.e., a pathological case.* *Clause 5.3.6 in* ISO/IEC 11518-1, HIPPI-PH, describes the possibility of lost READY indications. HIPPI-PH, 5.3.6, does not require Sources to accept more than 63 READY indications, but Serial-HIPPI implementations that can accept up to 255 READY indications without loss are desirable. The onset of the first lost READY indication can be delayed through various means, including but not limited to:

– a design that tolerates receiving a few short READY indications before dropping an output READY indication, or;

– using a flag bit or special states to indicate that the forwarded READY indications are behind and need to catch up, when able (e.g. when receiving more than four contiguous CLOCK periods of READY asserted or READY deasserted) or;

– using a counter, counting up for each READY indication received, and counting down for each READY indication forwarded.

Copyright International Organization for Standardization
Provided by IHS under license with ISO
No reproduction or networking permitted without license from IHS
Not for Resale

D.2 HIPPI-Serial Extender loopbacks

There are two desirable loopback modes for diagnosing a fault in a HIPPI-Serial Extender: local and remote. Figure D.1 illustrates both, with local loopback designated by LLB and remote loopback designated by RLB. These two modes of loopback allow the isolation of faults to the local end, the remote end, or the fibre optic cable, enhancing maintainability of the system.

D.2.1 Local loopback

The task of local loopback is to test the circuitry at the local end. The local loopback path should therefore include as much of the circuitry at the local end as possible. Ideally this would be implemented with an optical switch which would re-route the outgoing optical signal to the local optical receiver. However, a more economical approach is to re-route the serial electrical data stream from the output of the TLI to the input of the RLI. When a node is in local loopback, no data should be transmitted on the serial link.

D.2.2 Remote loopback

The task of remote loopback is to test the fibre optic cable between nodes. Therefore, the remote loopback path should contain only the cables, and as little of the remote node electronics as possible. Ideally this would be implemented by a switch that re-routes the received serial electrical signal directly to the serial optical transmitter.

An easy method to implement is to manually connect the remote HIPPI-Serial Extender's HIPPI-PH Source and Destination ports with a HIPPI cable. While this scheme does not offer the advantages of the direct RLI-TLI connection described above, it is the easiest to implement.

There is no need to be able to request that a local loopback test be performed at the remote node. If local loopback and remote loopback tests both pass, but there is still a high error rate on the link, the failure can be isolated to the remote circuitry by elimination. Note that under catastrophic failure a remote loopback command will fail, as the remote node will not even be able to receive the command. Remote loopback is, therefore, most useful when troubleshooting a high error rate that does not cause complete failure of the link.

When a node is requested to go into remote loopback (echo all data back), the signals delivered to the HIPPI-PH port should be set to zeroes. This will break all present connections, and prevent any connections from being established during remote loopback.

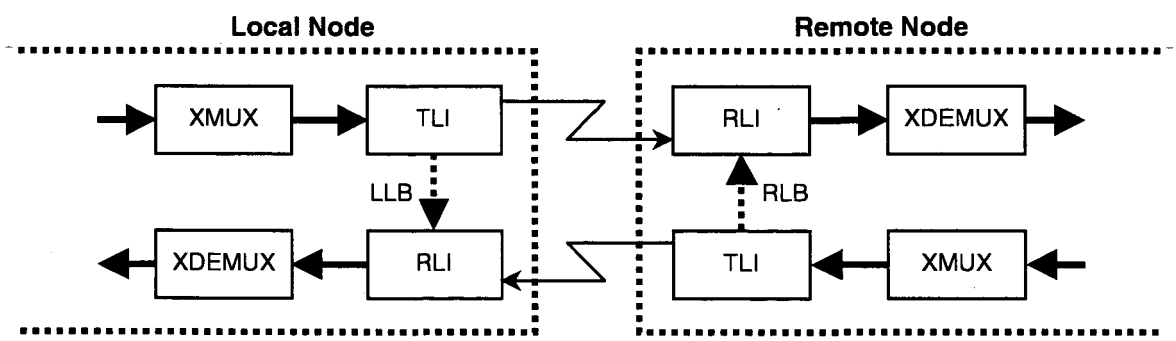

Figure D.1 – Remote and local loopback

Copyright International Organization for Standardization
Provided by IHS under license with ISO
No reproduction or networking permitted without license from IHS
Not for Resale

D.3 HIPPI-Serial Extender front panel user interface

It is desirable to include operator controlled switches on a HIPPI-Serial Extender for:

– Reset: causes a complete restart of the link;

– Disable 64-bit (1 600 Mbit/s) mode: allows a 64-bit HIPPI-Serial to operate in a 32-bit (800 Mbit/s) mode;

– Local loopback: connects the serial output of the TLI to the input of the RLI at the same node;

– Remote loopback: requests the remote node to echo all data back to the local node.

It is desirable to include operator indicators showing:

– the state of the TLI signals, as in 7.1 and 7.2;

– the type of frames (i.e., as in 6.2) being detected by the RLI;

– the state of the HIPPI control signals including INTERCONNECT, REQUEST, PACKET, BURST, and READY;

– local loopback, remote loopback (transmitting RL), or echoing data for the remote node (receiving RL) operation; and

– the status of the Parallel Parity Error (PP) and Serial Parity Error (SP) bits.

It is desirable to include connectors for transmit and receive of the Overhead bits OH2-OH7. The connector type is not specified.

Copyright International Organization for Standardization
Provided by IHS under license with ISO
No reproduction or networking permitted without license from IHS Not for Resale

Annex E
(informative)

Bibliography

The following references describe the 20-bit/24-bit coding used in HIPPI-Serial.

[1] "A 1.5 GB/s Link Interface Chipset for Computer Data Transmission", Richard C. Walker, Tom Hornak, Chu-Sun Yen, Joey Doernberg and Kent Springer, HP Labs Technical Report HPL-90-105, July, 1990.

[2] "A Chipset for Gigabit Rate Data Communication", Richard C. Walker, Tom Hornak, Chu-Sun Yen and Kent Springer, Proceedings of the 1989 Bipolar Circuits and Technology Meeting, September 18-19, 1989, pp. 288-290.

[3] "Phase Locked Loop for Clock Extraction in Gigabit Rate Data Communication Links", Craig Corsetto, Tom Hornak, Richard C. Walker, Chu-Sun Yen, U.S. Patent 4,926,447, May 15, 1990.

[4] "DC-Free Code for Arbitrary Data Transmission", Doug Crandall, Steve Hessel, Tom Hornak, Rasmus Nordby, Kent Springer and Richard C. Walker, U.S. Patent Pending

[5] "DC-Free Line Code and Bit and Frame Synchronization for Arbitrary Data Transmission", Tom Hornak, Benny Lai, Pat Petruno, Cheryl Stout, Rick Walker, Jieh-Tsorng Wu, Chu Yen, U.S. Patent Pending

[6] "Extending the Bandwidth x Distance Product for Multi-mode Fibers", Z. Haas and M Santoro, SPIE Proceedings, Vol. 1577, High-Speed Fiber Networks and Channels, September 1991.

Copyright International Organization for Standardization
Provided by IHS under license with ISO
No reproduction or networking permitted without license from IHS
Not for Resale

Standards Survey

The IEC would like to offer you the best quality standards possible. To make sure that we continue to meet your needs, your feedback is essential. Would you please take a minute to answer the questions overleaf and fax them to us at +41 22 919 03 00 or mail them to the address below. Thank you!

Customer Service Centre (CSC)
International Electrotechnical Commission
3, rue de Varembé
1211 Genève 20
Switzerland

or

Fax to: **IEC**/CSC at +41 22 919 03 00

Thank you for your contribution to the standards-making process.

A Prioritaire

Nicht frankieren
Ne pas affranchir

Non affrancare
No stamp required

RÉPONSE PAYÉE

SUISSE

Customer Service Centre (CSC)
International Electrotechnical Commission
3, rue de Varembé
1211 GENEVA 20
Switzerland

Copyright International Organization for Standardization
Provided by IHS under license with ISO
No reproduction or networking permitted without license from IHS
Not for Resale

Q1 Please report on **ONE STANDARD** and **ONE STANDARD ONLY**. Enter the exact number of the standard: *(e.g. 60601-1-1)*

.....

Q2 Please tell us in what capacity(ies) you bought the standard *(tick all that apply)*. I am the/a:

- purchasing agent ❑
- librarian ❑
- researcher ❑
- design engineer ❑
- safety engineer ❑
- testing engineer ❑
- marketing specialist ❑
- other.....

Q3 I work for/in/as a: *(tick all that apply)*

- manufacturing ❑
- consultant ❑
- government ❑
- test/certification facility ❑
- public utility ❑
- education ❑
- military ❑
- other.....

Q4 This standard will be used for: *(tick all that apply)*

- general reference ❑
- product research ❑
- product design/development ❑
- specifications ❑
- tenders ❑
- quality assessment ❑
- certification ❑
- technical documentation ❑
- thesis ❑
- manufacturing ❑
- other.....

Q5 This standard meets my needs: *(tick one)*

- not at all ❑
- nearly ❑
- fairly well ❑
- exactly ❑

Q6 If you ticked NOT AT ALL in Question 5 the reason is: *(tick all that apply)*

- standard is out of date ❑
- standard is incomplete ❑
- standard is too academic ❑
- standard is too superficial ❑
- title is misleading ❑
- I made the wrong choice ❑
- other .....

Q7 Please assess the standard in the following categories, using the numbers:
(1) unacceptable,
(2) below average,
(3) average,
(4) above average,
(5) exceptional,
(6) not applicable

- timeliness .....
- quality of writing.....
- technical contents.....
- logic of arrangement of contents .....
- tables, charts, graphs, figures.....
- other .....

Q8 I read/use the: *(tick one)*

- French text only ❑
- English text only ❑
- both English and French texts ❑

Q9 Please share any comment on any aspect of the IEC that you would like us to know:

.....
.....
.....
.....
.....
.....
.....
.....
.....
.....
.....
.....

Copyright International Organization for Standardization
Provided by IHS under license with ISO
No reproduction or networking permitted without license from IHS
Not for Resale

Enquête sur les normes

La CEI ambitionne de vous offrir les meilleures normes possibles. Pour nous assurer que nous continuons à répondre à votre attente, nous avons besoin de quelques renseignements de votre part. Nous vous demandons simplement de consacrer un instant pour répondre au questionnaire ci-après et de nous le retourner par fax au +41 22 919 03 00 ou par courrier à l'adresse ci-dessous. Merci !

Centre du Service Clientèle (CSC)

Commission Electrotechnique Internationale
3, rue de Varembé
1211 Genève 20
Suisse

ou

Télécopie: **CEI**/CSC +41 22 919 03 00

Nous vous remercions de la contribution que vous voudrez bien apporter ainsi à la Normalisation Internationale.

Nicht frankieren
Ne pas affranchir

Non affrancare
No stamp required

A Prioritaire

RÉPONSE PAYÉE

SUISSE

Centre du Service Clientèle (CSC)
Commission Electrotechnique Internationale
3, rue de Varembé
1211 GENÈVE 20
Suisse

Copyright International Organization for Standardization
Provided by IHS under license with ISO
No reproduction or networking permitted without license from IHS

Not for Resale

Q1 Veuillez ne mentionner qu'**UNE SEULE NORME** et indiquer son numéro exact: (*ex. 60601-1-1)*

.....

Q2 En tant qu'acheteur de cette norme, quelle est votre fonction? *(cochez tout ce qui convient)*
Je suis le/un:

- agent d'un service d'achat ❑
- bibliothécaire ❑
- chercheur ❑
- ingénieur concepteur ❑
- ingénieur sécurité ❑
- ingénieur d'essais ❑
- spécialiste en marketing ❑

autre(s).....

Q3 Je travaille: *(cochez tout ce qui convient)*

- dans l'industrie ❑
- comme consultant ❑
- pour un gouvernement ❑
- pour un organisme d'essais/ certification ❑
- dans un service public ❑
- dans l'enseignement ❑
- comme militaire ❑

autre(s).....

Q4 Cette norme sera utilisée pour/comme *(cochez tout ce qui convient)*

- ouvrage de référence ❑
- une recherche de produit ❑
- une étude/développement de produit ❑
- des spécifications ❑
- des soumissions ❑
- une évaluation de la qualité ❑
- une certification ❑
- une documentation technique ❑
- une thèse ❑
- la fabrication ❑

autre(s).....

Q5 Cette norme répond-elle à vos besoins: *(une seule réponse)*

- pas du tout ❑
- à peu près ❑
- assez bien ❑
- parfaitement ❑

Q6 Si vous avez répondu PAS DU TOUT à Q5, c'est pour la/les raison(s) suivantes: *(cochez tout ce qui convient)*

- la norme a besoin d'être révisée ❑
- la norme est incomplète ❑
- la norme est trop théorique ❑
- la norme est trop superficielle ❑
- le titre est équivoque ❑
- je n'ai pas fait le bon choix ❑

autre(s) .....

Q7 Veuillez évaluer chacun des critères ci-dessous en utilisant les chiffres
(1) inacceptable,
(2) au-dessous de la moyenne,
(3) moyen,
(4) au-dessus de la moyenne,
(5) exceptionnel,
(6) sans objet

publication en temps opportun .....
qualité de la rédaction.....
contenu technique .....
disposition logique du contenu .....
tableaux, diagrammes, graphiques, figures.....
autre(s) .....

Q8 Je lis/utilise: *(une seule réponse)*

- uniquement le texte français ❑
- uniquement le texte anglais ❑
- les textes anglais et français ❑

Q9 Veuillez nous faire part de vos observations éventuelles sur la CEI:

.....
.....
.....
.....
.....
.....

Copyright International Organization for Standardization
Provided by IHS under license with ISO
No reproduction or networking permitted without license from IHS
Not for Resale

ISBN 2-8318-4731-1



ICS 35.110

Typeset and printed by the IEC Central Office
GENEVA, SWITZERLAND

Copyright International Organization for Standardization
Provided by IHS under license with ISO
No reproduction or networking permitted without license from IHS

Not for Resale