INTERNATIONAL STANDARD

ISO/IEC 11518-8

First edition
1999-02

Information technology – High-Performance Parallel Interface

Part 8: Mapping to Asynchronous Transfer Mode (HIPPI-ATM)

Reference number
ISO/IEC 11518-8:1999(E)

Copyright International Organization for Standardization
Provided by IHS under license with ISO
No reproduction or networking permitted without license from IHS
Not for Resale

INTERNATIONAL STANDARD

ISO/IEC 11518-8

First edition
1999-02

Information technology – High-Performance Parallel Interface

Part 8: Mapping to Asynchronous Transfer Mode (HIPPI-ATM)

© ISO/IEC 1999

All rights reserved. Unless otherwise specified, no part of this publication may be reproduced or utilized in any form or by any means, electronic or mechanical, including photocopying and microfilm, without permission in writing from the publisher.

ISO/IEC Copyright Office • Case postale 56 • CH-1211 Genève 20 • Switzerland



PRICE CODE L

For price, see current catalogue

Copyright International Organization for Standardization
Provided by IHS under license with ISO
No reproduction or networking permitted without license from IHS

Not for Resale

Contents

Page

Foreword iii

1 Scope 1

2 Normative references 1

3 Definitions and conventions 1
3.1 Definitions 1
3.2 Editorial conventions 1

4 HIPPI format and conversion 2
4.1 HIPPI format 2
4.2 HIPPI Converter 2
4.3 H-PDU format 3
4.4 Connection and routing control 6
4.5 Flow control 7
4.6 Error control 10
4.7 Bit and byte ordering 11
4.8 Inverse multiplexing (striping) 11
4.9 Loop back 12

5 ATM Specifics 13
5.1 ATM format 13
5.2 ATM routing and connection control 13
5.3 ATM error control 13

Tables

Table 1 – Mapping HIPPI_Burst_Data to 800 Mbit/s HIPPI-PH bursts 5
Table 2 – Mapping HIPPI_Burst_Data to 1600 Mbit/s HIPPI-PH bursts 5
Table 3 – Summary of V and H bit actions 6
Table 4 – Byte assignments 11

Figures

Figure 1 – HIPPI logical framing hierarchy 2
Figure 2 – System with generic HIPPI Converters 3
Figure 3 – H-PDU format with the HB_Header carrying credit information 4
Figure 4 – Credit parameters and credit control flow 9
Figure 5 – Near-end HIPPI Converter in local loop back 12
Figure 6 – AAL 5 CPCS-PDU for HIPPI-ATM Converter 14
Figure 7 – System with HIPPI-ATM Converters 14
Figure 8 – Mapping two 800 Mbit/s HIPPI-PH full bursts to an H-PDU and ATM cells 15
Figure 9 – Mapping a 1600 Mbit/s HIPPI-PH full burst to an H-PDU and ATM cells 16
Figure A.1 – System with HIPPI-ATM IP Router 18
Figure A.2 – HIPPI to AAL 5 IP packet mapping 18

Copyright International Organization for Standardization
Provided by IHS under license with ISO
No reproduction or networking permitted without license from IHS
Not for Resale

Annexes

A HIPPI-ATM IP Router 17
A.1 Overview 17
A.2 IP packet mapping 18

B Bibliography 19

Copyright International Organization for Standardization
Provided by IHS under license with ISO
No reproduction or networking permitted without license from IHS Not for Resale

Information technology – High-Performance Parallel Interface –

Part 8:
Mapping to Asynchronous Transfer Mode (HIPPI-ATM)

Foreword

ISO (the International Organization for Standardization) and IEC (the International Electrotechnical Commission) form the specialized system for worldwide standardization. National bodies that are members of ISO or IEC participate in the development of International Standards through technical committees established by the respective organization to deal with particular fields of technical activity. ISO and IEC technical committees collaborate in fields of mutual interest. Other international organizations, governmental and non-governmental, in liaison with ISO and IEC, also take part in the work.

In the field of information technology, ISO and IEC have established a joint technical committee, ISO/IEC JTC 1. Draft International Standards adopted by the joint technical committee are circulated to national bodies for voting. Publication as an International Standard requires approval by at least 75% of the national bodies casting a vote.

International Standard ISO/IEC 11518-8 was prepared by Joint Technical Committee ISO/IEC JTC 1, *Information technology,* Subcommittee SC 25, *Interconnection of information technology equipment.*

ISO/IEC 11518 consists of the following parts, under the general title *Information technology – High-Performance Parallel Interface:*

- *Part 1: Mechanical, electrical, and signalling protocol specification (HIPPI-PH)*
- *Part 2: Framing Protocol (HIPPI-FP)*
- *Part 3: Encapsulation of ISO/IEC 8802-2 (IEEE Std 802.2) Logical Link Control Protocol Data Units (HIPPI-LE)*
- *Part 4: Mapping of HIPPI to IPI device generic command sets (HIPPI-IPI)*
- *Part 5: Memory Interface (HIPPI-MI)*
- *Part 6: Physical Switch Control (HIPPI-SC)*
- *Part 8: Mapping to Asynchronous Transfer Mode (HIPPI-ATM)*
- *Part 9: Serial Specification (HIPPI-Serial)*

Annexes A and B of this part of ISO/IEC 11518 are for information only.

Copyright International Organization for Standardization
Provided by IHS under license with ISO
No reproduction or networking permitted without license from IHS Not for Resale

Information technology – High-Performance Parallel Interface –

Part 8: Mapping to Asynchronous Transfer Mode (HIPPI-ATM)

1 Scope

This part of ISO/IEC 11518 defines the frame formats and protocol definitions for encapsulation of High-Performance Parallel Interface – Mechanical, Electrical, and Signalling Protocol Specification (HIPPI-PH) packets for transfer over Asynchronous Transfer Mode (ATM) equipment, i.e., tunnelling through ATM, or for use with other media. An informative annex describes an IP Router for use between HIPPI and ATM systems.

Physical layer specifications for transporting ATM cells are not specified. Both the 800 Mbit/s (100 MByte/s) and 1600 Mbit/s (200 MByte/s) HIPPI-PH options are supported. Transfers from an 800 Mbit/s HIPPI-PH, through HIPPI-ATM, to a 1600 Mbit/s HIPPI-PH, and vice versa, are supported.

2 Normative references

The following standards contain provisions which, through reference in this text, constitute provisions of this International Standard. At the time of publication, the editions indicated were valid. All standards are subject to revision, and parties to agreements based on this International standard are encouraged to investigate the possibility of applying the most recent editions of the standards listed below.

ISO/IEC 11518-1:1995, *High-Performance Parallel Interface - Part 1: Mechanical, electrical, and signalling protocol specification (HIPPI-PH)*

ITU-T Recommendation I.361-1993, *B-ISDN ATM Layer Specification*

ITU-T Recommendation I.363-1993, *B-ISDN ATM Adaptation Layer (AAL) Specification*

3 Definitions and conventions

3.1 Definitions

For the purposes of this International Standard, the following definitions apply.

3.1.1 HB_Header: The eight-byte header of an H-PDU.

3.1.2 H-PDU: A protocol data unit consisting of a HB_Header, and possibly the data portion of one or two HIPPI-PH bursts.

3.1.3 protocol data unit (PDU): The unit of data transfer between communicating peer layer entities.

3.2 Editorial conventions

In this part of ISO/IEC 11518, a number of conditions, mechanisms, parameters, or similar terms are printed with the first letter of each word in uppercase and the rest lowercase (e.g., Pad). Any lowercase uses of these words have the normal technical English meaning.

In this standard the words byte and octet are synonymous.

Copyright International Organization for Standardization
Provided by IHS under license with ISO
No reproduction or networking permitted without license from IHS
Not for Resale

4 HIPPI format and conversion

4.1 HIPPI format

Figure 1 shows the HIPPI physical level format as specified in ISO/IEC 11518-1, HIPPI-PH.

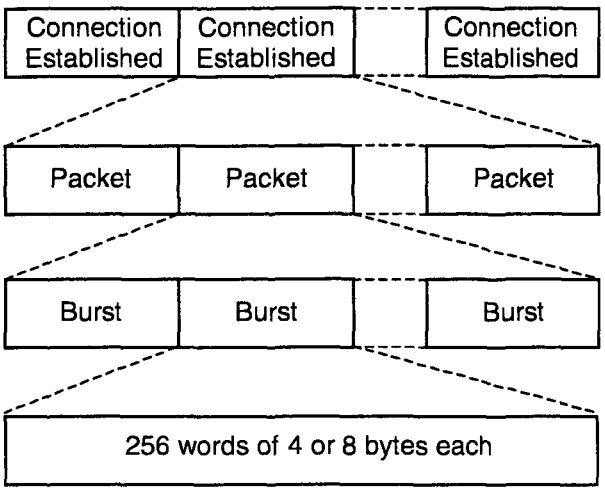

Figure 1 – HIPPI logical framing hierarchy

Once a connection is established a packet (or multiple packets) can be sent from the Source to the Destination. Each packet contains one or more bursts. Bursts contain 1 word to 256 words. The 800 Mbit/s HIPPI-PH option uses 4-byte words, the 1600 Mbit/s option uses 8-byte words. Bursts that contain less than 256 words are called short bursts. A packet may contain no more than one short burst. A short burst may be either the first burst, or the last burst of a multi-burst packet.

4.2 HIPPI Converter

Figure 2 shows HIPPI Converters in a representative full-duplex system. HIPPI switches, e.g., as described in HIPPI-SC [1], may exist between the HIPPI-based devices and the HIPPI Converters. For convenience in reading this clause, the HIPPI Converter sending-side is called the sending-side, and the HIPPI Converter receiving-side is called the receiving-side.

In figure 2, the boxes labeled XX convert between the HIPPI-PH signals and the intermediate media. The use of ATM as an intermediate media is detailed in clause 5. Other intermediate media (e.g., FDDI or Fibre Channel) may also be used to transport the H-PDUs, but specifics are not included in HIPPI-ATM.

HIPPI-PH signals are encapsulated in H-PDUs, transferred transparently through the intermediate media, and reconstituted as HIPPI-PH signals. There are no requirements as to the format or data content of the HIPPI signals other than they shall meet the specifications of ISO/IEC 11518-1, HIPPI-PH. The use of HIPPI-FP [2], or other HIPPI upper layer protocol, while not precluded, is not required. Other than the delay through the intermediate media equipment, the only differences seen between the near-end HIPPI Source signals and the signals received by the far-end HIPPI Destination should be at most some non-critical timing differences, and the fact that the number of READY indications may differ between the two ends.

After connections are made (see 4.4 for connection details) the functions performed in figure 2 include:

a) The HIPPI Source outputs a packet of data, with the packet composed of one or more bursts. There are no restrictions as to the size or content of the packet, or to the inclusion or location of short bursts. Although not shown, HIPPI switches as described in HIPPI-SC [1], may be between the HIPPI devices – e.g., between the near-end HIPPI-based device (Source) and the HIPPI Converter (sending-side) similarly for the far-end.

Copyright International Organization for Standardization
Provided by IHS under license with ISO
No reproduction or networking permitted without license from IHS
Not for Resale

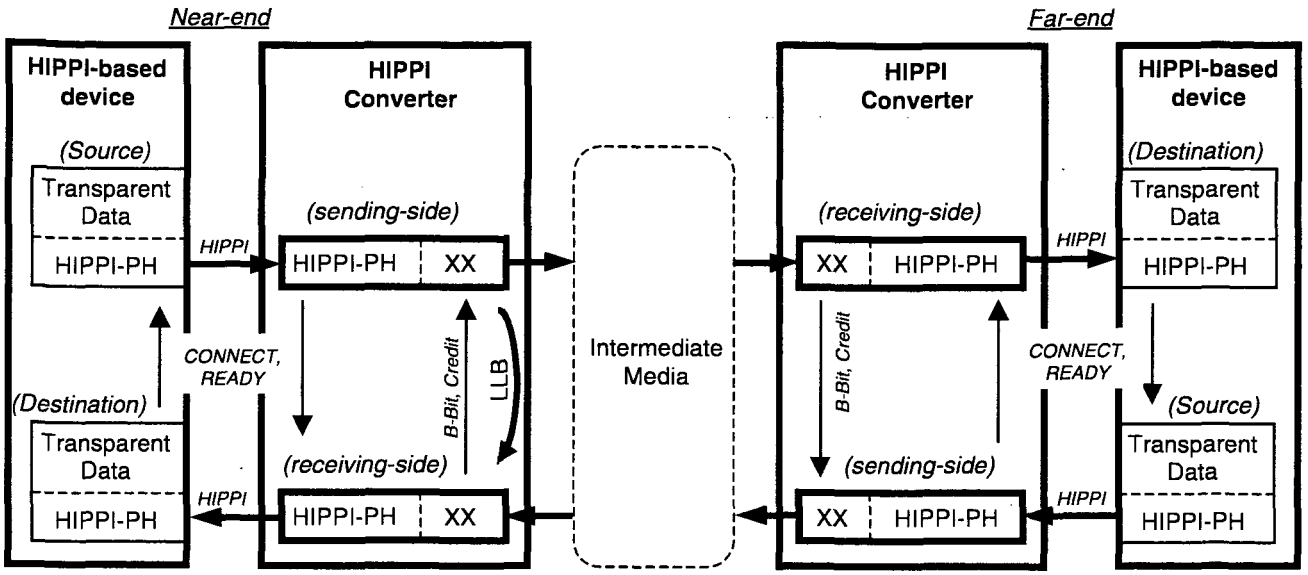

Figure 2 – System with generic HIPPI Converters

b) The sending-side shall assemble up to 2048 bytes of HIPPI-PH burst data received (in one or two bursts), with an HB_Header, into an H-PDU. Each H-PDU is then carried through the intermediate media. An intermediate media reverse direction path for Credit information provides flow control similar to the HIPPI READY signals. (See 4.5.)

c) At the receiving-side, the H-PDUs are recovered. Each H-PDU containing HIPPI data shall be translated by the receiving-side into one or two HIPPI-PH bursts. H-PDUs without HIPPI data may be used for passing control information. The HIPPI-PH signals from the HIPPI Converter receiving-side are equivalent to those generated by the original HIPPI Source.

4.3 H-PDU format

A HIPPI-PH packet is composed of one or more data bursts. The data portion of one or two of these bursts, and an eight byte HB_Header form an H-PDU. Control information may be sent along with the HIPPI data, or in H-PDUs consisting of only the HB_Header. Figure 3 shows the format of an H-PDU and an HB_Header carrying credit information.

4.3.1 HB_Header Word 0

An HB_Header passes control information between HIPPI Converters. It may be sent by itself, or with HIPPI data burst(s). The HB_Header shall be the first eight bytes of the H-PDU. The fields in Word 0 are:

V = Valid (bit 31)

V = 1 means that HB_Header Word 1 contains valid information. (See the I bit for contents selection.)

V = 0 means that contents of HB_Header Word 1 shall be ignored.

I = I-Field (bit 30) signifies which of two parameter sets is contained in HB_Header Word 1 when V = 1.

I = 1 means that a new connection is being requested and Word 1 contains I-Field information.

I = 0 means that Word 1 contains credit and capability information. I = 0 shall be transmitted when V = 0.

D = Disconnect (bit 29)

D = 1 means that the near-end HIPPI Source has deasserted the REQUEST signal, breaking the connection. The receiving-side shall deassert the REQUEST signal

Copyright International Organization for Standardization
Provided by IHS under license with ISO
No reproduction or networking permitted without license from IHS
Not for Resale

breaking the connection to the far-end HIPPI Destination. If the H-PDU contains HIPPI_Burst_Data, then the REQUEST signal shall be deasserted after transmitting the burst(s).

D = 0 requires no action by the receiving-side.

PA = PACKET signal control (bits 28,27)

PA = 00 requires no action by the receiving-side.

PA = 01 means that the receiving-side shall assert the PACKET signal. If the H-PDU contains HIPPI_Burst_Data, then the PACKET signal shall be asserted before transmitting the burst(s).

PA = 10 means that the receiving-side shall deassert the PACKET signal. If the H-PDU contains HIPPI_Burst_Data, then the PACKET signal shall be deasserted after transmitting the burst(s).

PA = 11 means that the receiving-side shall assert the PACKET signal before transmitting the burst, and then deassert the PACKET signal after transmitting the burst(s).

E = Error (bit 26)

E = 1 means that the sending-side detected a parity or LLRC error in the data from the HIPPI Source. The receiving-side shall force parity and/or LLRC errors in the burst(s) being sent to the HIPPI Destination.

E = 0 requires no action by the receiving-side.

R = Reset (bit 25).

R = 1 signals receiving-side to initialise itself. (See 4.5.2.)

R = 0 requires no action by the receiving-side.

H = HIPPI-significant (bit 23)

H = 1 means that this H-PDU contains HIPPI_Burst_Data or HIPPI-PH state change information (i.e., any of I = 1, D = 1, PA ? 00, E = 1, R = 1, or L = 1).

H = 0 means that the contents of this H-PDU do not affect the HIPPI receiving-side (i.e., this H-PDU contains only credit update information for the sending-side). H-PDUs without HIPPI-significant information (i.e., with H = 0 in the HB_Header) are not flow controlled. An H-PDU with H = 0 may be transmitted by the sending-side regardless of the value of its Credit_Count. The sending-side shall not decrement Credit_Count when transmitting an H-PDU with H = 0. A receiving-side shall not change the New_Credit value when processing an H-PDU with H = 0.

Rsv = Reserved (bit 22) shall be transmitted as zero, but shall not be checked at the receiver.

Burst_Length (bits 21-12) denotes the length of the HIPPI_Burst_Data field in 32-bit words, i.e., *Burst_Length* times 4 bytes.

H-PDU_Count (bits 11-0) is a running count, modulo 4096, of the number of H-PDUs with H = 1 transmitted. See 4.6.2 for details on using the H-PDU_Count to detect lost H-PDUs.

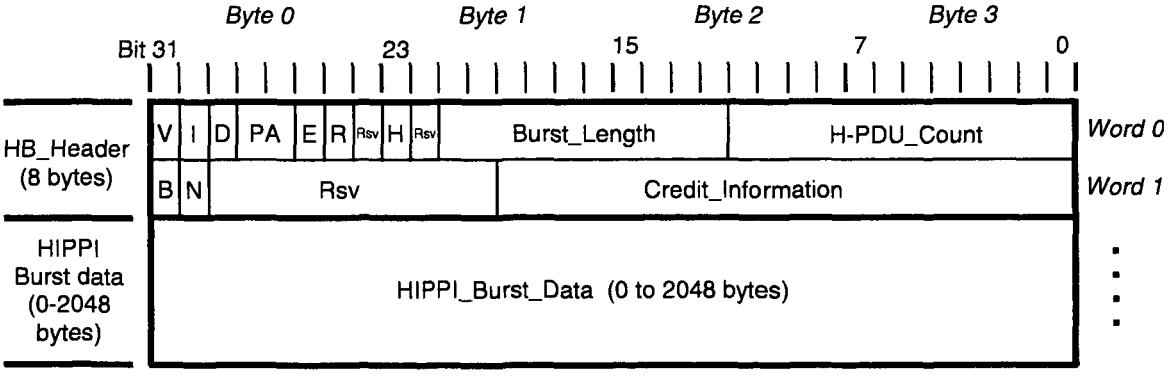

Figure 3 – H-PDU format with the HB_Header carrying credit information

Copyright International Organization for Standardization
Provided by IHS under license with ISO
No reproduction or networking permitted without license from IHS
Not for Resale

4.3.2 HB_Header Word 1

HB_Header Word 1 shall contain I-Field, or credit and initialisation information, when V = 1, or no information when V = 0. Figure 3 shows the case where V = 1 (Valid) and I = 0 (Word 1 contains credit information).

B = Break connection (bit 31)

B = 1 means that the far-end HIPPI Destination has deasserted the CONNECT signal to break the connection before receiving D = 1, i.e., unexpectedly disconnected. The near-end HIPPI Converter receiving-side shall pass this indication to its local sending-side, which in turn shall deassert the CONNECT signal to the near-end HIPPI Source. As noted in A.6 of ISO/IEC 11518-1, HIPPI-PH, the near-end HIPPI Source may not see this indication, or associate it with the connection that caused the indication.

B = 0 requires no action by the receiving-side.

N = Credit_Information (bit 30)

N = 1 means that the Credit_Information is New_Credit.

N = 0 means that the Credit_Information is Initial_Credit.

Rsv = Reserved (bits 29-20) shall be transmitted as zeros, but shall not be checked at the receiver.

Credit_Information (bits 19-0) (See 4.5.1.)

4.3.3 Data fields

HIPPI_Burst_Data is the HIPPI Source information from one or two HIPPI-PH bursts. Note that bursts on 800 Mbit/s HIPPI-PH contain from one to 256 32-bit words (four bytes to 1024 bytes), and bursts on 1600 Mbit/s HIPPI-PH contain from one 64-bit word to 256 64-bit words (eight bytes to 2048 bytes). The individual HIPPI-PH bursts are transferred as entities, and shall not be split between multiple H-PDUs.

The H-PDUs from the sending-side of a HIPPI-ATM connected to an 800 Mbit/s HIPPI-PH shall contain one of the following in the HIPPI_Burst_Data field:

– one short burst (< 1024 bytes), or

– one full burst (1024 bytes) if this is the last or only burst in the packet, or

– two full bursts (1024 bytes each for 2048 bytes total).

The H-PDUs from the sending-side of a HIPPI-ATM connected to a 1600 Mbit/s HIPPI-PH shall contain one of the following in the HIPPI_Burst_Data field:

– one short burst (< 2048 bytes), or

– one full burst (2048 bytes)

An H-PDU containing *n* bytes of HIPPI_Burst_Data, received by the receiving-side of an HIPPI-ATM connected to an 800 Mbit/s HIPPI-PH, shall be passed to the HIPPI-PH as shown in table 1.

Table 1 – Mapping HIPPI_Burst_Data to 800 Mbit/s HIPPI-PH bursts

***n* (bytes)**	**Convert HIPPI Burst_Data to:**
≤ 1024	one short burst
1024	one full burst
1025 to 2047	the first data sent as a full burst, remaining data sent as a short burst
2048	two full bursts

An H-PDU containing *n* bytes of HIPPI_Burst_Data, received by the receiving-side of an HIPPI-ATM connected to a 1600 Mbit/s HIPPI-PH, shall be passed to the HIPPI-PH as shown in table 2.

Table 2 – Mapping HIPPI_Burst_Data to 1600 Mbit/s HIPPI-PH bursts

***n* (bytes)**	**Convert HIPPI Burst_Data to:**
≤ 2048	one short burst
2048	one full burst

Copyright International Organization for Standardization
Provided by IHS under license with ISO
No reproduction or networking permitted without license from IHS Not for Resale

4.3.4 Processing H-PDUs based on V and H bits

The V bit in the HB_Header tells the receiving-side if HB_Header Word 1 contains credit information that should be passed to its local sending-side. The H bit in the HB_Header tells the receiving-side if the H-PDU contains HIPPI data, or if HB_Header Word 0 contains HIPPI state information, for processing by this receiving-side . Table 3 is a summary of the actions taken for the different combinations of the V and H bits. V = 0 and H = 0 is an invalid combination.

4.4 Connection and routing control

In relation to figure 2, an end-to-end connection is actually composed of three separate connections. The connection between the HIPPI-based device and the HIPPI Converter shall be as specified by ISO/IEC 11518-1, HIPPI-PH, i.e., by the HIPPI REQUEST and CONNECT signals and the I-Field.

NOTE – HIPPI switches between the HIPPI-based devices and the HIPPI Converters may use the I-Field for routing and control as described in HIPPI-SC [1]

The connection across an ATM intermediate media is specified in 5.2. Connections, or passing of H-PDUs, across other intermediate media shall be as specified for the particular media.

These connections are separated for performance reasons. The connection across the intermediate media may be independent of the HIPPI equipment making and breaking connections. For example, the intermediate media connection may last across multiple packets and for a long time, as in the case of ATM. The near-end and far-end HIPPI Converters are also assumed to be independent of each other to avoid the latency of the intermediate media becoming part of the connection setup time. These separate connections allow a system to send small packets composed of a single H-PDU, or a small number of H-PDUs, in a store-and-forward fashion, with the connection breaking on one link while the packet is being forwarded on the next link.

For example, it is reasonable to expect a HIPPI Source to make a connection to its local HIPPI Converter, send a short packet (e.g., 64 kBytes) and then break the connection. In this example, the HIPPI Converter would forward the connection, packet, and disconnection over the intermediate media. If the intermediate media covers a large distance (e.g., an ATM link) then there may be several operations and H-PDUs in flight at any one time. When the far-end HIPPI Converter receives a HIPPI connection sequence, it shall make a connection to the far-end HIPPI-based device, send the packet, and then disconnect from the far-end HIPPI-based device.

If a parity error occurred on an I-Field from the HIPPI Source to the near-end sending-side, the HIPPI Converter shall immediately reject the connection and not send an H-PDU.

Table 3 – Summary of V and H bit actions

V and H bits 01	10	11	Action
√		√	Sending-side increments the H-PDU_Count in the H-PDU
√	√	√	Sending-side can transmit the H-PDU when Credit_Count ≠ 0
	√		Sending-side can transmit the H-PDU when Credit_Count = 0
√		√	Sending-side decrements Credit_Count when it transmits the H-PDU
	√	√	Receiving-side passes Word 1 to its local sending-side
√		√	Receiving-side processes Word 0 and burst data, and increments New_Credit when done

Copyright International Organization for Standardization
Provided by IHS under license with ISO
No reproduction or networking permitted without license from IHS
Not for Resale

If H-PDUs cannot be transferred across the intermediate media for whatever reason (e.g., a connection cannot be established) and the HIPPI-based device Source tries to make a connection to the sending-side, then the sending-side shall immediately reject the connection.

If a connection(s) exists between the HIPPI Converter and a HIPPI-based device, and the state of the intermediate media unexpectedly changes such that H-PDUs can no longer be transferred across the intermediate media, then the HIPPI Converter sending-side shall break any existing connections to the HIPPI-based device Source. Disconnection from the HIPPI-based Destination shall occur after sending as much data as possible from the receiving-side.

If the receiving-side is unable to establish a connection with the requested HIPPI-based device, it shall time out and discard any packet information associated with this connection request.

If the HIPPI Converter receiving-side receives a Rejected connection sequence (see annex A.7 of ISO/IEC 11518-1, HIPPI-PH) while trying to establish a connection, it may retry the connection at a later time. If the HIPPI Converter receiving-side is unable to establish a connection with the requested HIPPI-based device, it shall time out and discard any packet information associated with this connection request. The default value of this time out period shall be 3 seconds. Note that the sending-side will be unaware of these actions and will need to use higher layer protocols for recovery.

If the sending-side does not receive a credit update for 15 seconds, then the intermediate media link is assumed to be dead. The sending-side shall break any existing connections with the HIPPI-based device Source, and shall reinitialise the intermediate media link as specified in 4.5.2.

4.5 Flow control

As with the connection control, the flow control is also treated as three separate entities. The function of the flow control mechanisms is to provide a way for the data receivers to inform the data transmitters of the data receivers ability to accept data, e.g., how much receive buffer space is available.

The flow control between the HIPPI-based device and the HIPPI Converter shall be as specified by ISO/IEC 11518-1, HIPPI-PH, i.e., by HIPPI READY indications.

A credit mechanism provides positive flow control across the intermediate media to prevent buffer overflow at the receiving-side. The credit is separate and independent of any flow control mechanism in the intermediate media, e.g., to pace the insertion of cells into the ATM equipment, or to prevent cell loss within the ATM equipment. The credit is also separate and independent of the HIPPI READY pulses controlling the flow between the HIPPI end nodes and the HIPPI Converters.

The flow of H-PDUs is paced by the receiving-side. The receiving-side sends an Initial_Credit value to the sending-side. This value denotes the capability of the receiving-side to accept H-PDUs, e.g., one credit for each 1024-byte HIPPI burst. The sending-side now has permission to send that number of H-PDUs to the receiving-side.

As the receiving-side processes the H-PDUs, and forwards the bursts to the HIPPI Destination, it frees up buffers. The receiving-side notifies the sending-side of the now free buffers by sending credit updates.

H-PDUs without HIPPI-significant information (i.e., containing only credit update information, H = 0) are not flow controlled. (See 4.3.1 and 4.3.4.)

As noted in ISO/IEC 11518-1, HIPPI-PH, approximately one 1024-byte receive buffer is required for each kilometre of distance to sustain the full 800 Mbit/s HIPPI bandwidth. Fewer buffers would be needed for slower links, e.g., if the maximum bandwidth is limited to 100 Mbit/s then one buffer would be needed for

Copyright International Organization for Standardization
Provided by IHS under license with ISO
No reproduction or networking permitted without license from IHS Not for Resale

each 8 km of distance to sustain the 100 Mbit/s rate. In terms of a bandwidth-delay product:

$n \geq 0{,}12 \times BW \times RTT$

where:

n = number of buffers, or credits, needed to sustain BW
BW = data transfer rate (in Mbit/s)
RTT = round trip delay time (in milliseconds)

4.5.1 Credit parameters

Operations on the credit values shall be done with two's complement arithmetic. The sending-side shall use the following credit parameters:

– Credit_Count – The current number of receiving-side buffers available. The Credit_Count shall be decremented by the sending-side for each H-PDU with H = 1 transmitted. The sending-side shall not send H-PDUs with H = 1 when Credit_Count = 0. The Credit_Count value shall be 20 bits in length. (See 4.3.1 and 4.3.4 for operations with H = 0.)

– Old_Credit – The previous New_Credit value received from the receiving-side. The Old_Credit value shall be ten bits in length.

The receiving-side shall use the following credit parameters:

– Initial_Credit – The number of 1032-byte H-PDUs that can be accepted by the receiving-side without buffer overflow. The Initial_Credit value shall be 20 bits in length.

– New_Credit – The number of buffers made available since the Initial_Credit was sent. The New_Credit value shall increment by one for each buffer freed, and shall wrap when the count value overflows. The New_Credit value shall be ten bits in length. New_Credit shall be right justified in the Credit_Information field, with zeros in the ten most significant bits of Credit_Information.

The credit operations are based on the number of buffers for 1032-byte H-PDUs. 2056-byte H-PDUs are assumed to use two buffers. Hence, when sending a 1032-byte or smaller H-PDU, the sending-side shall decrement Credit_Count by one, and shall decrement by two when sending a larger H-PDU, i.e., 1033-byte to 2056-byte H-PDU.

4.5.2 Initialising credit and other parameters

Figure 4 shows the credit parameters in HIPPI Converters separated by an intermediate media, and provides references for the information flow.

The initialisation process starts by the near-end sending-side:

set Credit_Count = 1;
set H-PDU_Count = 0;
send an H-PDU with R = 1 and H = 1 in the HB_Header.

Any HIPPI data within the sending-side shall be discarded. Passing the initialisation H-PDU is shown as (A) in figure 4.

Upon receiving this H-PDU with R = 1 and H = 1, the far-end receiving-side shall:

initialise its logic;
initialise its buffers;
set New_Credit = 0;
set H-PDU_Count = 0;
set an appropriate Initial_Credit value.

This Initial_Credit value is then passed to the far-end sending-side. This is shown as (B) in figure 4. Any HIPPI data within the receiving-side shall be discarded.

The far-end sending-side shall form up an HB_Header:

set V = 1;
set I = 0;
set H = 1 if this HB_Header also contains HIPPI state change information or Burst_Length ≠ 0;
set N = 0;
set Credit_Information = Initial_Credit value received.

This HB_Header may be sent as the only information in the H-PDU, or in an H-PDU that also contains HIPPI_Burst_ Data being sent from the far-end sending-side. This H-PDU transfer is shown as (C) in figure 4.

Upon receiving an H-PDU with V = 1 and I = 0, the near-end receiving-side shall pass the HB_Header Word 1 to the near-end sending-side. This is shown as (D) in figure 4.

Copyright International Organization for Standardization
Provided by IHS under license with ISO
No reproduction or networking permitted without license from IHS
Not for Resale

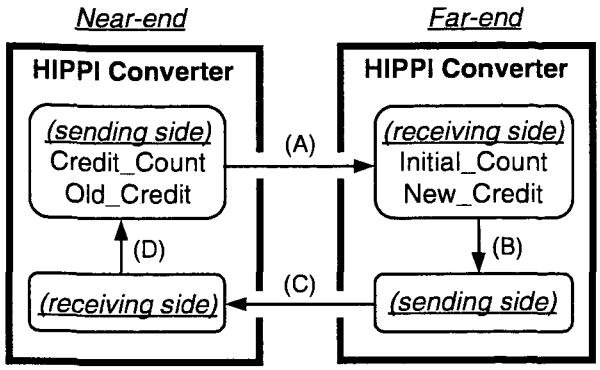

Figure 4 – Credit parameters and credit control flow

The near-end sending-side, upon seeing N = 0 shall:

set H-PDU_Count = 0;
set Old_Credit = 0;
set Credit_Count = Credit_Information.

The sending-side is now enabled to send data to the receiving-side since the Credit_Count was set to the Initial_Credit value. (See 4.6.2 for what happens if the initialisation is lost.)

While the receiving-side cannot initiate an initialisation operation, it can effectively reset most of the link and parameters by acting as if it had received the (A) message with R = 1, and start the procedure from there.

The credit across the intermediate media link operates in a dual simplex mode, i.e., an initialisation process from the near-end to the far-end does not also initialise the reverse path (far-end to near-end).

4.5.3 Updating the credit

As the receiving-side processes the H-PDUs with H = 1, buffers are freed up. The receiving-side shall increment New_Credit for each buffer freed, and shall periodically inform the sending-side of the number of buffers freed up so that the sending-side can update its Credit_Count accordingly. To avoid sending-side credit starvation due to credit updates being lost, credit updates shall be sent at least once a second. If no buffers have been freed, then a duplicate of the previous New_Credit shall be sent. (See 4.4 for actions taken when expected credit updates are not received for an extended period.)

To send credit update information to the near-end sending-side, the far-end receiving-side passes the New_Credit value to the far-end sending-side. This is shown as (B) in figure 4.

The far-end sending-side shall form up an HB_Header:

set V = 1;
set I = 0;
set H = 1 if this HB_Header also contains HIPPI state change information or Burst_Length ≠ 0;
set N = 1;
set Credit_Information = the New_Credit value received.

This HB_Header may be sent as the only information in an H-PDU, or in an H-PDU that also contains HIPPI_Burst_ Data being sent from the far-end sending-side. This H-PDU transfer is shown as (C) in figure 4.

Upon receiving an H-PDU with V = 1 and I = 0, the near-end receiving-side shall pass the HB_Header Word 1 to the near-end sending-side. This is shown as (D) in figure 4.

The near-end sending-side, upon seeing N = 1, shall update Credit_Count with the receiver's delta change, i.e., New_Credit minus Old_Credit, since the previous update:

$$\text{Credit_Count} = \text{New_Credit} - \text{Old_Credit} + \text{Credit_Count}$$

This equation uses two's complement modulo n arithmetic, where values that wrap shall be treated as larger values than values that have not wrapped. This means that the maximum update size is one less than half of the maximum value of the counters, i.e., 511 with 10-bit New_Credit and Old_Credit sizes.

The near-end sending-side then sets Old_Credit to the New_Credit value received.

Copyright International Organization for Standardization
Provided by IHS under license with ISO
No reproduction or networking permitted without license from IHS Not for Resale

4.6 Error control

4.6.1 HIPPI side errors

If the sending-side of a HIPPI Converter detects a parity or LLRC error on its HIPPI side, it shall set E = 1 in the HB_Header associated with that HIPPI data. A HIPPI Converter receiving E = 1 in an HB_Header shall force parity and/or LLRC errors in the associated burst being sent to the HIPPI Destination.

Other HIPPI errors (e.g., sequence errors) shall be handled as specified in ISO/IEC 11518-1, HIPPI-PH, and may not be signalled to the HIPPI Destination.

Errors associated with making and maintaining connections between the different entities are detailed in 4.4.

4.6.2 Errors mapping between 800 Mbit/s and 1600 Mbit/s options

Mapping between 800 Mbit/s and 1600 Mbit/s options is supported for most cases. A case that is not supported is when a 1600 Mbit/s HIPPI-PH is sending a short burst of 1025 bytes to 2047 bytes followed by more bursts in the packet. In this case the HIPPI-ATM Converter passing data to an 800 Mbit/s HIPPI-PH would see a full 1024-byte burst, a short burst, and more full bursts; violating the HIPPI-PH rule that a short burst must only be either the first or last burst. However, HIPPI-FP [2] specifies that the D1_Area be small enough to fit in a 1024-byte burst. Hence the case cited would only occur when (1) HIPPI-FP is not used, and (2) the Source sends a short first burst of more than 1024 bytes. The combination is not deemed very likely.

Another case that may cause problems is when an 800 Mbit/s HIPPI-PH sends a short first burst followed by an odd number of full bursts. In this case, the receiving 1600 Mbit/s HIPPI-ATM Converter will generate a short first burst, full 2048-byte bursts, and the a short last burst containing 1024 bytes. This violates the HIPPI-PH rule that there can only be one short burst per packet. It is felt that most implementations will tolerate short bursts at both ends, but it can be avoided by making sure that the Source always generates an even number of full bursts following a short first burst if there is the possibility of the Destination using the 1600 Mbit/s option.

4.6.3 Intermediate media errors

It is expected that errors in the intermediate media will be detected by mechanisms provided by the intermediate media. If the intermediate media does not provide adequate error detection, then it is strongly suggested that additional checksums or other mechanisms be provided.

H-PDUs received with intermediate media errors may be discarded with no indication provided to the HIPPI Destination. Alternatively, questionable data may be forwarded to the HIPPI Destination, but shall be marked with parity and/or LLRC errors. The receiving-side may also truncate the HIPPI packet in this case.

During initialisation, if an H-PDU is lost, the HIPPI Converter sending-side will not receive an Initial_Credit value, and shall time out. The default value of this initialisation timer shall be 10 seconds.

If the HIPPI Converter receiving-side misses an H-PDU, i.e., there is a gap in the H-PDU_Count values, then the receiving-side shall adjust its New_Credit value to account for these H-PDUs. This keeps the credit values in step even if H-PDUs are lost between the sending-side and the receiving-side. The receiving-side shall truncate any HIPPI packet being received, discarding any further bursts from the sending-end until the end of packet is received, i.e., PA = 10.

If an H-PDU carrying New_Credit information from the receiving-side to the sending-side is lost, the only harm will be to delay updating the sending-side's Credit_Count until another New_Credit value is sent. The Credit_Count value will not be incorrect due to the missing H-PDU unless the sum of the updates is greater than 511. (See 4.4 for the actions taken when expected credit updates are not received for an extended period.)

Copyright International Organization for Standardization
Provided by IHS under license with ISO
No reproduction or networking permitted without license from IHS Not for Resale

4.7 Bit and byte ordering

The byte positions within the HIPPI words, for both the 800 Mbit/s and 1600 Mbit/s (32-bit and 64-bit) HIPPI-PHs, shall be as shown in table 4. Byte 0 is the first byte in the ordered byte stream, byte 1 is the second byte, etc. Bit ordering with a byte is as shown in figure 3. Figure 3 also shows the byte order for the 800 Mbit/s HIPPI-PH option.

Table 4 – Byte assignments

Byte No.	Data signals on 32-bit HIPPI-PH	Data signals on 64-bit HIPPI-PH
0	D31-D24	D31-D24
1	D23-D16	D23-D16
2	D15-D08	D15-D08
3	D07-D00	D07-D00
4	D31-D24	D63-D56
5	D23-D16	D55-D48
6	D15-D08	D47-D40
7	D07-D00	D39-D32

4.8 Inverse multiplexing (striping)

HIPPI-PH with data rates of 800 Mbit/s or 1600 Mbit/s is faster than many other media. As such, the speed of the intermediate media may well cause the overall throughput to decrease to unacceptable rates. It is possible to use multiple intermediate media connections to transfer several H-PDUs simultaneously. This is similar in function to the striping operations used in redundant arrays of inexpensive disks (RAID). In RAID, the data is spread over multiple disks to increase performance, while here it is used to spread the transmission bandwidth over multiple intermediate media connections.

The H-PDU_Count field in the HB_Header enables inverse multiplexing by indicating the transmit order of the H-PDUs. At the receiving side, the H-PDUs would be put back in the proper sequence based on the H-PDU_Count parameter.

For example, if there were four available connections across the intermediate media, numbered 1 - 4, then the first H-PDU could be sent across connection 1, the second across 2, etc. At the receiving side, each H-PDU would probably be recovered separately. The H-PDU_Count field in the HB_Header of each H-PDU would be used to reorder the received H-PDUs before conversion to HIPPI-PH signals. As long as the skew between the intermediate media connections is less than 10 ms, reassembling the H-PDUs in the proper order should be possible; of course the larger the skew the larger the buffers on the receive side.

It is reasonable to consider using one intermediate media connection during periods of light activity, or when lower bandwidth is acceptable, and then adding more connections as the bandwidth needs increase. These connections could be static, or added and broken dynamically as the load changes.

The methods for making and controlling multiple intermediate media connections are specific to the particular media, and are outside the scope of HIPPI-ATM.

The credit-based flow control across the intermediate media (as specified in 4.5) shall operate in a global fashion (i.e., across the complete set of intermediate media connections in use) rather than across individual connections.

Copyright International Organization for Standardization
Provided by IHS under license with ISO
No reproduction or networking permitted without license from IHS Not for Resale

4.9 Loop back

HIPPI Converters shall provide loop back capability for fault diagnosis. Loop back allows the echoed data to be checked for errors.

4.9.1 Local loop back

HIPPI Converters shall provide a local loop back facility as shown in figure 5 as path LLB. Local loop back shall connect the transmit signal to the receive signal within a converter. When in local loop back, the signal to the far-end shall be disabled. The shaded areas in figure 5 do not participate in local loop back, they are just shown for reference.

The task of the local loop back is to test the circuitry at the local end. The loop back should therefore include as much of the circuitry at the local end as possible. Local loop back should occur as close to the intermediate media as possible. Ideally this would be implemented as re-routing the intermediate media signal from the transmitter to the receiver, e.g., like a loop back cable. This is shown as the LLB path in figure 5.

When going into, or out of, local loop back, the credit and other parameters of the newly communicating sending-side and receiving-side should be initialised by setting R = 1 in the HB_Header. Failure to initialise may result in overruns, credit starvation, or other errors. (See 4.5.2.)

The near-end sending side control operation used to set local loop back is beyond the scope of HIPPI-ATM. It may be from a front panel switch, or from some other source other than the HIPPI connection.

When transitioning into, or out of, local loop back, any connections to the near-end HIPPI-based device shall be broken. Also, after transitioning into, or out of, local loop back, the credit parameters shall be initialised, i.e., with R = 1. (See 4.5.2.)

4.9.2 Remote loop back

Remote loop back can be implemented by physically replacing the HIPPI cables between the far-end HIPPI-ATM Converter and the far-end HIPPI-based device with a HIPPI cable connecting the HIPPI-ATM Converter's sending-side and receiving-side.

NOTE – Since the intermediate media will probably provide a mechanism to check the health of the intermediate media, a separate HIPPI-level remote loop back was not felt to be cost effective.

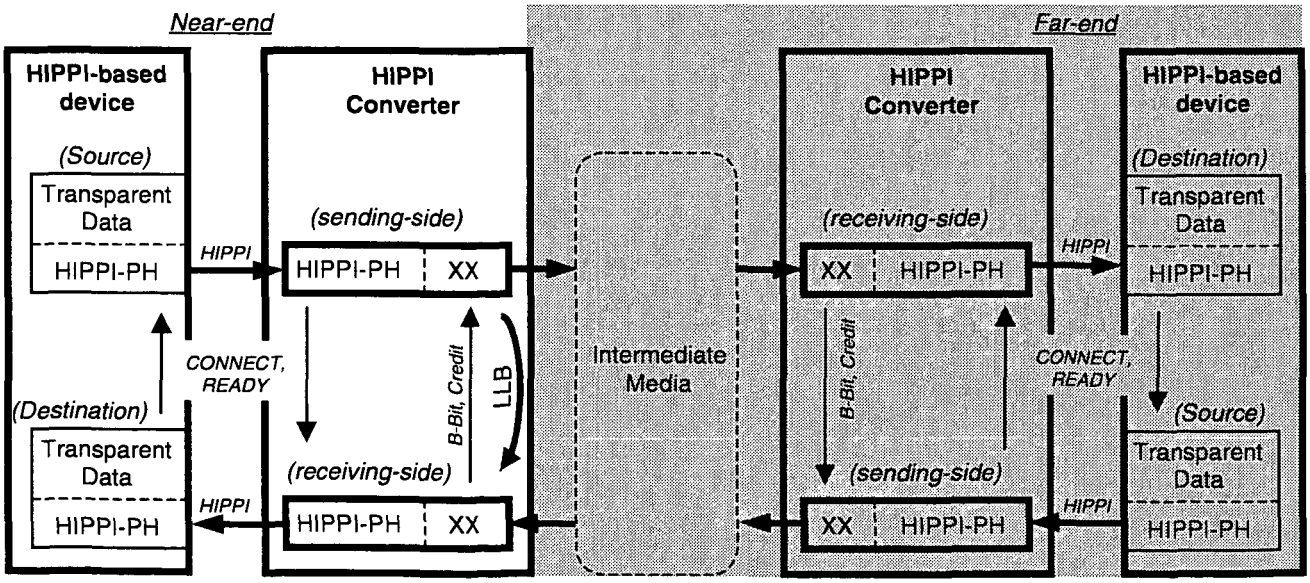

Figure 5 – Near-end HIPPI Converter in local loop back

Copyright International Organization for Standardization
Provided by IHS under license with ISO
No reproduction or networking permitted without license from IHS
Not for Resale

5 ATM Specifics

Figure 7 shows HIPPI-ATM Converters in a representative full-duplex system. The structure and details of ATM are specified in ITU-T I.361. The ATM side of the HIPPI-ATM Converter uses the ATM Forum User-Network Interface Specification (UNI) [3]. With respect to the UNI, the HIPPI Converter operates as an ATM user connected to an ATM switch.

An ATM switch may or may not be in the system; it is just shown for completeness. ATM switches do not modify or otherwise transform the payload portion of the ATM cells. ATM cells are delivered in the same sequence as they were sent.

5.1 ATM format

ATM Adaptation Layer 5 (AAL 5), as specified in ITU-T I.363, carries the H-PDUs. Using the same style as used in figure 3 for the H-PDU, figure 6 shows the format of the AAL 5 Common Part Convergence Sublayer – Protocol Data Unit (CPCS-PDU).

The AAL 5 CPCS-PDU is segmented into 48 byte cells, and a 5-byte ATM header for routing and control is placed at the beginning of each cell. The resultant 53-byte ATM cells are the entities passed through the ATM equipment. Figure 8 shows the encapsulation of an 800 Mbit/s HIPPI-PH burst in an H-PDU and ATM cells. Figure 9 shows a similar mapping for a 1600 Mbit/s HIPPI-PH burst.

The H-PDU, as specified in 4.3, is carried in the payload portion of the AAL 5 CPCS-PDU.

The AAL 5 Pad is unused bytes used to fill out the last cell to right justify the Trailer. The Pad is limited to 44 bytes, rather than the normal 47 bytes, because the HIPPI data is a multiple of 4 bytes.

The eight-byte AAL 5 Trailer contains:

– The CPCS-UU and CPI control fields are not used by HIPPI-ATM.

– Packet Length contains the actual length, in bytes, of the user data, i.e., the H-PDU. Packet Length does not include the Pad or Trailer.

– CRC-32 provides a Cyclic Redundancy Check (CRC) over the entire CPCS-PDU including the Payload (H-PDU), Pad, control, and Packet Length fields.

5.2 ATM routing and connection control

Routing on the ATM side is controlled by the Virtual Path Identifier (VPI), Virtual Channel Identifier (VCI) and other ATM header parameters. All of the cells associated with a HIPPI connection shall be identified by a single VPI/VCI pair, or if inverse multiplexing is used then by the set of VPI/VCI pairs. The VPI/VCI pair(s) are for the exclusive use of the HIPPI-ATM Converters, and shall not be shared with other ATM traffic.

The connection(s) across the ATM link and/or switch are controlled as described in the ATM UNI [3]. The operations to set up, or tear down, ATM virtual circuits are outside the scope of HIPPI-ATM.

5.3 ATM error control

It is expected that most of the errors on the ATM side will be either bit errors, or dropped cells. Bit errors will be detected by the AAL 5 CRC-32. Dropped cells may occur as the result of congestion in an ATM switch, or uncorrectable errors in the ATM header. H-PDUs with H = 1 contained in a single cell that is dropped will not be detected by the ATM checking, but should be detected by an H-PDU_Count error. H-PDUs with H = 0, containing only credit updates, will be contained in a single cell, which if dropped should not cause lasting harm. (See 4.6.2.)

AAL 5 CPCS-PDUs received with either CRC-32 errors, or errors in the AAL 5 CPCS-PDU Length field (signifying more bytes in the PDU than in the number of cells received), shall be discarded with no indication provided to the HIPPI Destination.

Copyright International Organization for Standardization
Provided by IHS under license with ISO
No reproduction or networking permitted without license from IHS Not for Resale

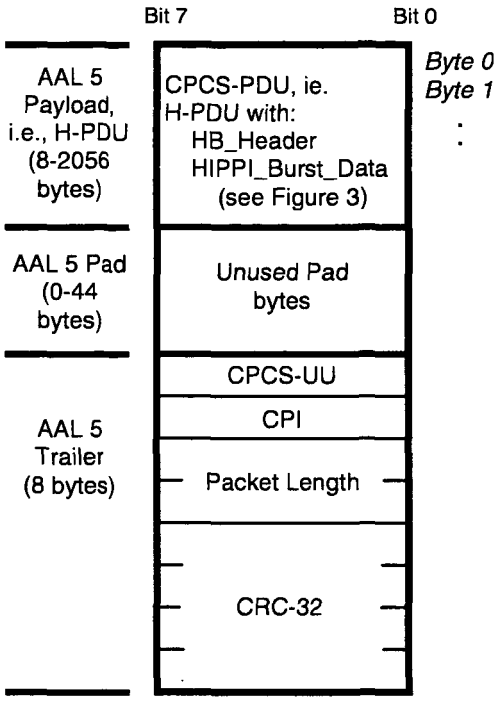

Figure 6 – AAL 5 CPCS-PDU for HIPPI-ATM Converter

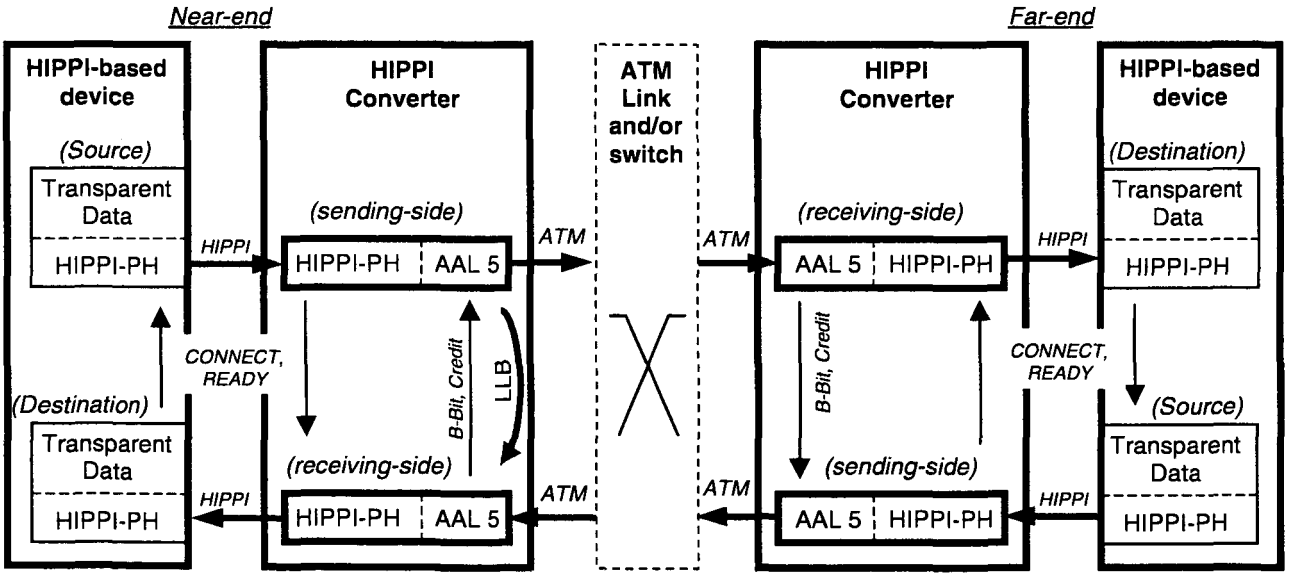

Figure 7 – System with HIPPI-ATM Converters

Copyright International Organization for Standardization
Provided by IHS under license with ISO
No reproduction or networking permitted without license from IHS
Not for Resale

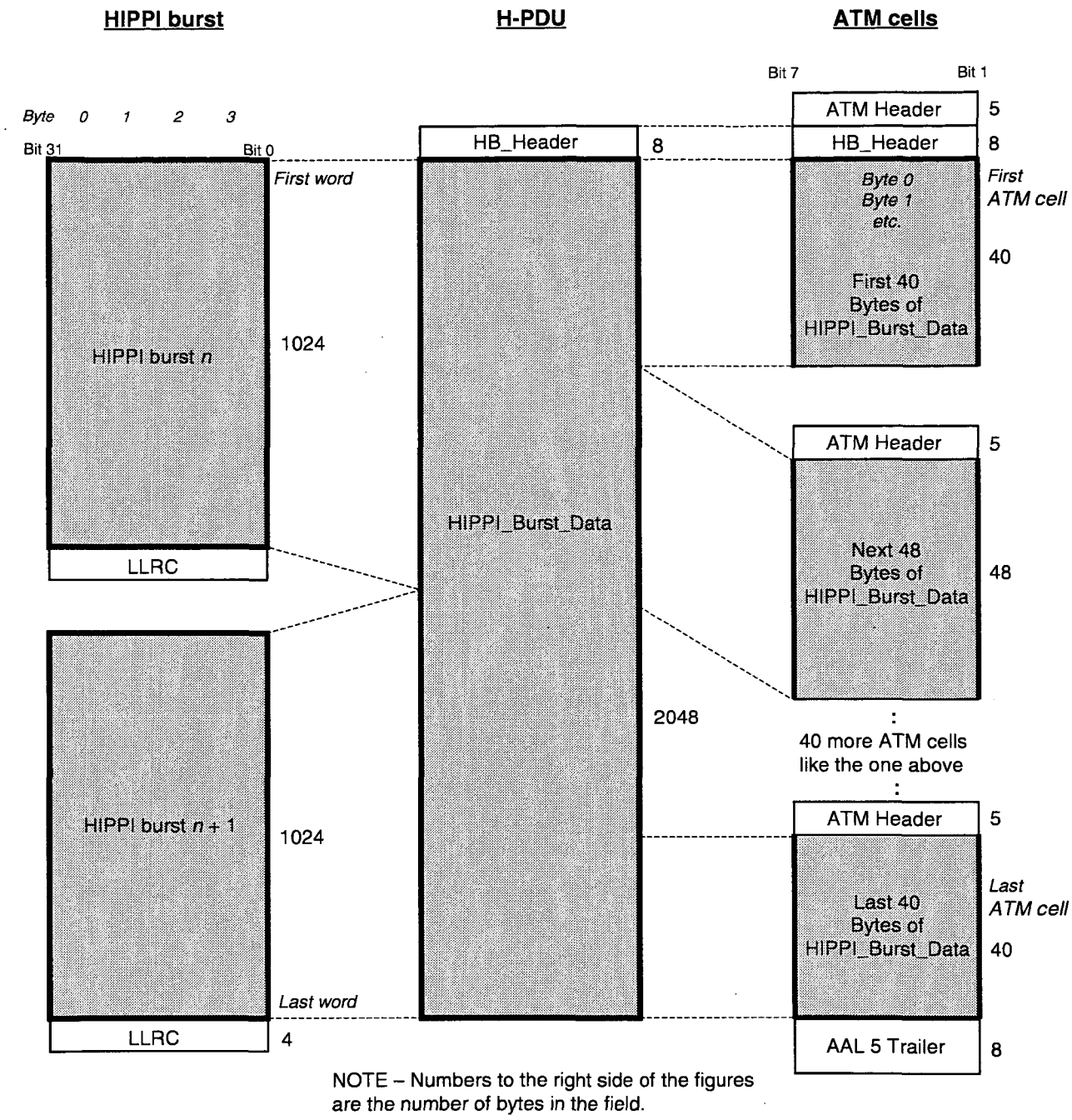

Figure 8 – Mapping two 800 Mbit/s HIPPI-PH full bursts to an H-PDU and ATM cells

Copyright International Organization for Standardization
Provided by IHS under license with ISO
No reproduction or networking permitted without license from IHS
Not for Resale

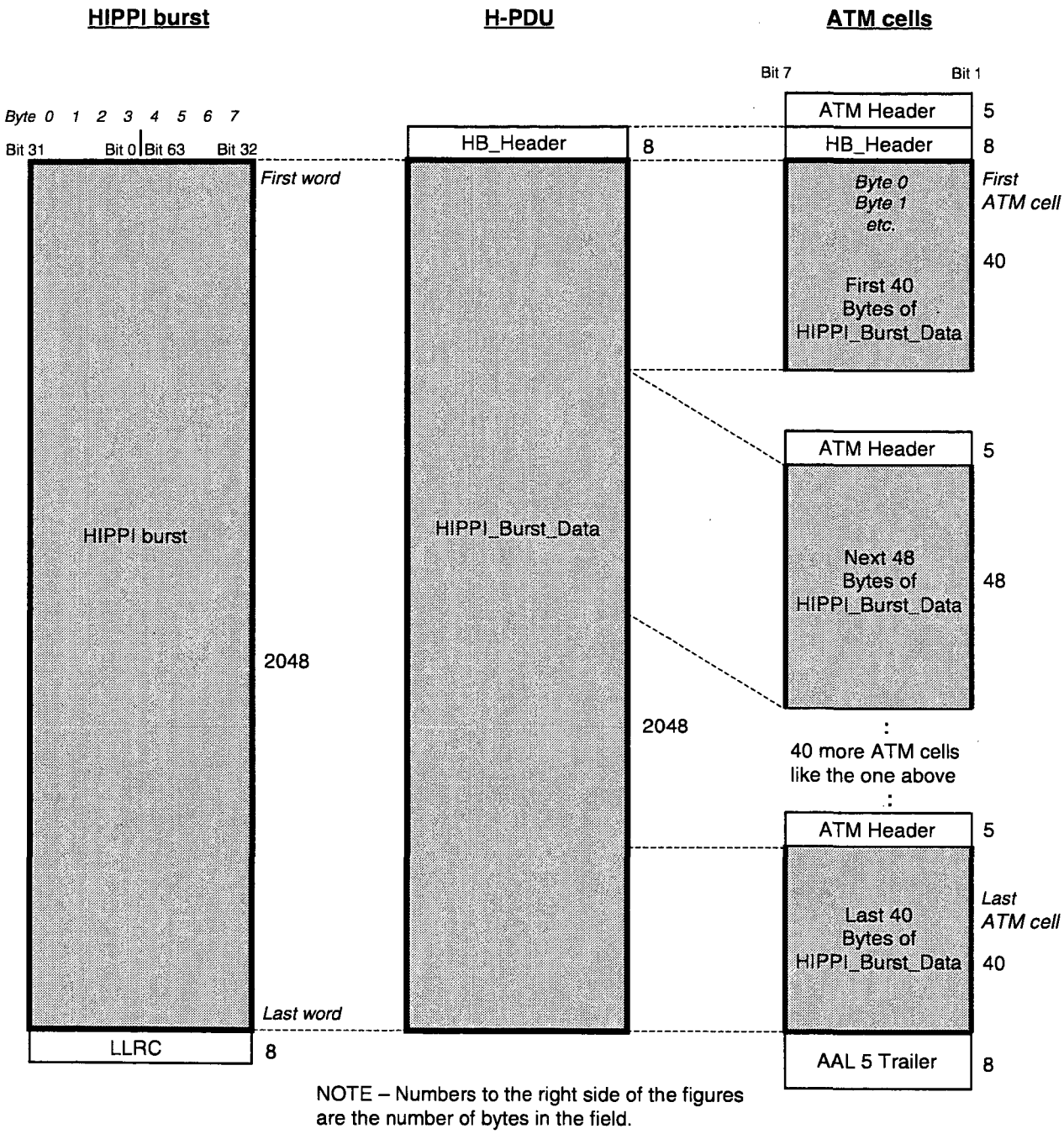

Figure 9 – Mapping a 1600 Mbit/s HIPPI-PH full burst to an H-PDU and ATM cells

Copyright International Organization for Standardization
Provided by IHS under license with ISO
No reproduction or networking permitted without license from IHS
Not for Resale

Annex A
(informative)

HIPPI-ATM IP Router

A.1 Overview

This annex describes the use of existing standards for routing Internet Protocol (IP) packets between HIPPI based systems and ATM based systems. This annex is included as useful information, not as requirements or implementation specifics.

The HIPPI-ATM IP Router uses existing standard IP transport mechanisms for both the HIPPI and ATM based devices. Transport of IP over HIPPI is specified in ISO/IEC 11518-3, High-Performance Parallel Interface - Encapsulation of ISO 8802-2 (IEEE Std 802.2) Logical Link Control Protocol Data Units (HIPPI-LE) [4] and RFC 1374 [5]. Transport of IP over ATM is specified in RFC 1483 [6] and RFC 1577 [7]. No changes should be required to the protocols of either the HIPPI or ATM based devices. The ATM-based device must use LLC SNAP headers.

The HIPPI-ATM IP Router is not constrained to specific data rates for the HIPPI or ATM connections. HIPPI equipment operating at 800 Mbit/s or 1600 Mbit/s may be used. The physical layer used on the ATM side is not specified, and may be selected by the implementer based on cost, throughput, availability, and other considerations.

Figure A.1 shows a HIPPI-ATM IP Router in a representative system. A single VPI/VCI provides the forward and reverse paths through the ATM equipment.

The functions performed in figure A.1 to transfer an IP PDU from the HIPPI-based device to the ATM-based Device include:

a) On the HIPPI side, the IP PDU is placed in a HIPPI packet as specified by HIPPI-LE [4] and RFC 1374 [5]. This process uses a HIPPI-FP header [2], and a HIPPI-LE header, preceding the IP PDU. The resultant HIPPI packet is transmitted using ISO/IEC 11518-1, HIPPI-PH, to a HIPPI Destination, in this case the HIPPI-ATM IP Router. This is shown in figure A.1 by following the IP PDU, from the HIPPI Source in the HIPPI-based device, down through the protocol stack of HIPPI-LE, HIPPI-FP, and HIPPI-PH.

b) HIPPI switches, e.g., as described in HIPPI-SC [1], may be between the HIPPI-based device and the HIPPI-ATM IP Router. A HIPPI switch is shown in figure A.1 just for completeness. HIPPI switches do not modify or otherwise transform the packet.

c) In the HIPPI portion of the sending-side of the HIPPI-ATM IP Router, the HIPPI-FP and HIPPI-LE headers are discarded, and the resultant IP PDU passed to the ATM side.

d) In the AAL 5 portion of the sending-side of the HIPPI-ATM IP Router, the IP PDU is packaged in an AAL 5 packet as specified in RFC 1483 [6] and RFC 1577 [7]. Since ATM is data rate independent, and physical layer independent, no specific physical layer is shown on the ATM side of the HIPPI-ATM IP Router. The ATM side of the HIPPI-ATM IP Router should conform to the ATM Forum User-Network Interface Specification (UNI) for connecting to a private ATM switch.

e) An ATM switch may or may not be in the system; it is just shown for completeness. ATM switches do not modify or otherwise transform the payload portion of the ATM cells. ATM cells are delivered in sequence.

f) In the ATM-based device, the IP PDU is extracted from the AAL 5 packet.

A similar scenario may be used to transfer IP PDUs from the ATM-based device to the HIPPI-based device.

Copyright International Organization for Standardization
Provided by IHS under license with ISO
No reproduction or networking permitted without license from IHS Not for Resale

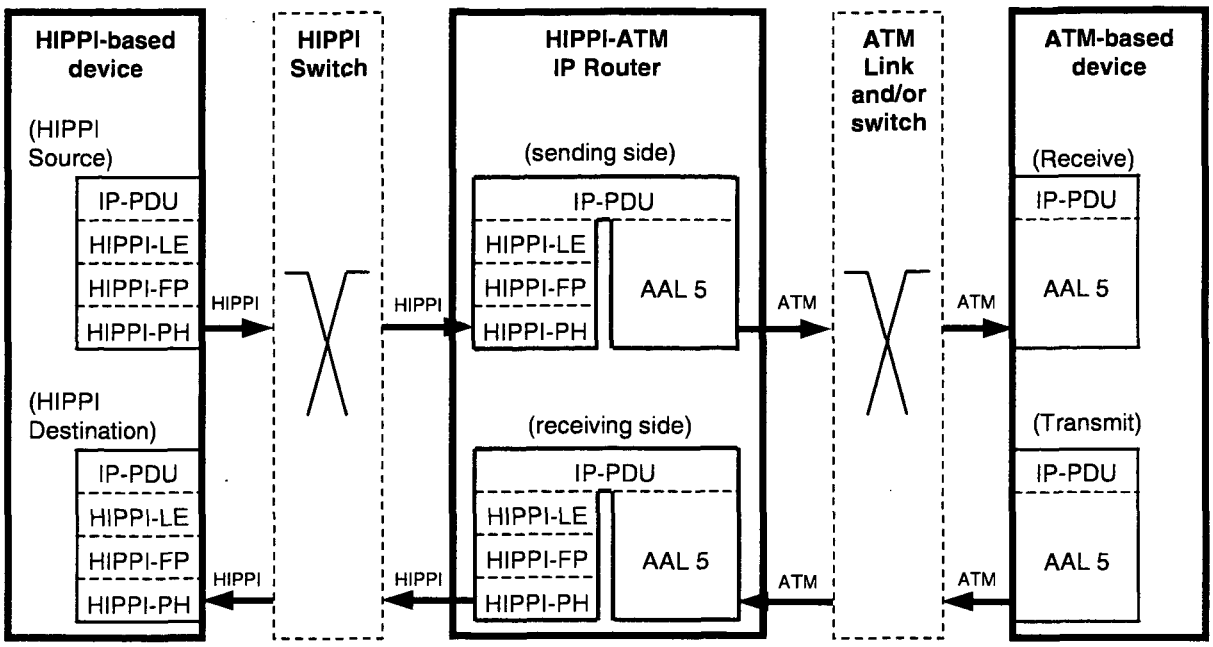

Figure A.1 – System with HIPPI-ATM IP Router

A.2 IP packet mapping

Figure A.2 shows the operations used in mapping a HIPPI packet carrying an IP PDU to an AAL 5 packet carrying the same IP PDU. Mapping in the inverse direction is also possible.

RFC 1374 [5] specifies the Maximum Transmission Unit (MTU) for IP packets as 65,280 (decimal) bytes in the HIPPI environment. "Default IP MTU for use over ATM AAL5" [8] specifies a default MTU of 9180 bytes. RFC 1191 [9] describes the method of determining MTU restrictions on an arbitrary network path between two hosts, and may be used with the HIPPI-ATM IP Router to determine the allowable MTU value.

When going from HIPPI to ATM, The VPI/VCI may be derived from the IP address in the IP PDU header, or from the received I-Field, or from the HIPPI-LE Destination_Switch_Address, or from the HIPPI-LE Destination_IEEE_Address (48-bit address). When going from ATM to HIPPI, the IP address in the IP PDU header may be used to derive the I-Field, the HIPPI-LE Destination_Switch_Address, and the HIPPI-LE Destination_IEEE_Address (48-bit address). This annex does not specify how these fields are derived.

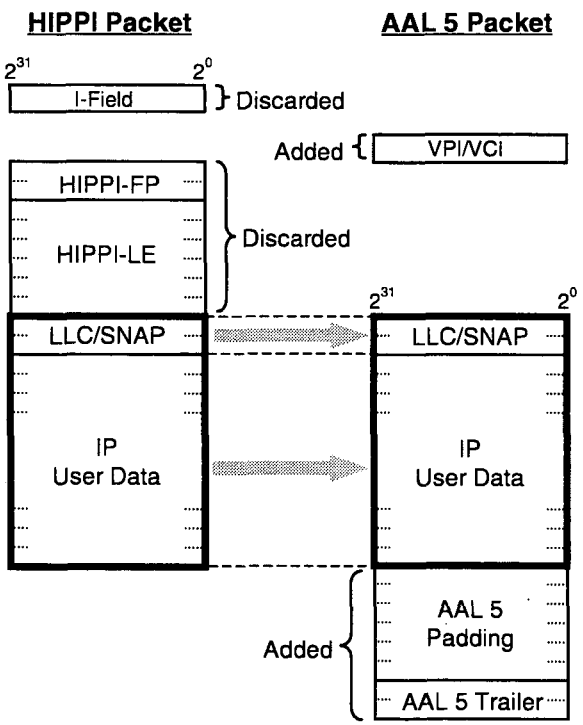

Figure A.2 – HIPPI to AAL 5 IP packet mapping

Copyright International Organization for Standardization
Provided by IHS under license with ISO
No reproduction or networking permitted without license from IHS
Not for Resale

Annex B
(informative)

Bibliography

[1] ISO/IEC 11518-6:1996, *High-Performance Parallel Interface, – Physical Switch Control (HIPPI-SC).* (Specifies the control of physical layer HIPPI switches.)

[2] ISO/IEC 11518-2:1996, *High-Performance Parallel Interface - Framing Protocol (HIPPI-FP).* (Specifies a frame format and packet header for use with ISO/IEC 11518-1, HIPPI-PH.)

[3] ATM Forum, *User-Network Interface Specification (UNI).* (Specifies the interfaces between ATM user equipment and public or private ATM network equipment.)

[4] ISO/IEC 11518-3:1996, *High-Performance Parallel Interface - Encapsulation of ISO 8802-2 (IEEE Std 802.2) Logical Link Control Protocol Data Units (HIPPI-LE).* (Specifies an encapsulation for using HIPPI-FP lower layer.)

[5] RFC 1374, *IP and ARP on HIPPI.* (Describes a technique whereby IP equipped hosts using a HIPPI compliant interface may discover the media address of a destination host with a known IP address.)

[6] RFC 1483, *Multiprotocol Encapsulation over ATM Adaptation Layer 5.* (Describes the encapsulation method for carrying IP packets over ATM AAL 5.)

[7] RFC 1577, *Classical IP and ARP over ATM.* (Defines an application of classical IP and ARP in an ATM network environment configured as a Logical IP Subnetwork (LIS).)

[8] INTERNET DRAFT, *Default IP MTU for use over ATM AAL5.* (Defines the IP maximum transmission unit (MTU) as 9120 bytes.)

[9] RFC 1191, Path MTU Discovery. (Describes a technique for dynamically discovering the maximum transmission unit (MTU) of an arbitrary interconnect path.)

Copyright International Organization for Standardization
Provided by IHS under license with ISO
No reproduction or networking permitted without license from IHS Not for Resale

Standards Survey

The IEC would like to offer you the best quality standards possible. To make sure that we continue to meet your needs, your feedback is essential. Would you please take a minute to answer the questions overleaf and fax them to us at +41 22 919 03 00 or mail them to the address below. Thank you!

Customer Service Centre (CSC)

International Electrotechnical Commission
3, rue de Varembé
1211 Genève 20
Switzerland

or

Fax to: **IEC**/CSC at +41 22 919 03 00

Thank you for your contribution to the standards-making process.

A Prioritaire

Nicht frankieren
Ne pas affranchir

Non affrancare
No stamp required

RÉPONSE PAYÉE

SUISSE

Customer Service Centre (CSC)
International Electrotechnical Commission
3, rue de Varembé
1211 GENEVA 20
Switzerland

Copyright International Organization for Standardization
Provided by IHS under license with ISO
No reproduction or networking permitted without license from IHS
Not for Resale

Q1 Please report on **ONE STANDARD** and **ONE STANDARD ONLY**. Enter the exact number of the standard: *(e.g. 60601-1-1)*

.....

Q2 Please tell us in what capacity(ies) you bought the standard *(tick all that apply)*. I am the/a:

- purchasing agent ❑
- librarian ❑
- researcher ❑
- design engineer ❑
- safety engineer ❑
- testing engineer ❑
- marketing specialist ❑
- other.....

Q3 I work for/in/as a: *(tick all that apply)*

- manufacturing ❑
- consultant ❑
- government ❑
- test/certification facility ❑
- public utility ❑
- education ❑
- military ❑
- other.....

Q4 This standard will be used for: *(tick all that apply)*

- general reference ❑
- product research ❑
- product design/development ❑
- specifications ❑
- tenders ❑
- quality assessment ❑
- certification ❑
- technical documentation ❑
- thesis ❑
- manufacturing ❑
- other.....

Q5 This standard meets my needs: *(tick one)*

- not at all ❑
- nearly ❑
- fairly well ❑
- exactly ❑

Q6 If you ticked NOT AT ALL in Question 5 the reason is: *(tick all that apply)*

- standard is out of date ❑
- standard is incomplete ❑
- standard is too academic ❑
- standard is too superficial ❑
- title is misleading ❑
- I made the wrong choice ❑
- other .....

Q7 Please assess the standard in the following categories, using the numbers:
(1) unacceptable,
(2) below average,
(3) average,
(4) above average,
(5) exceptional,
(6) not applicable

- timeliness .....
- quality of writing.....
- technical contents.....
- logic of arrangement of contents .....
- tables, charts, graphs, figures.....
- other .....

Q8 I read/use the: *(tick one)*

- French text only ❑
- English text only ❑
- both English and French texts ❑

Q9 Please share any comment on any aspect of the IEC that you would like us to know:

.....
.....
.....
.....
.....
.....
.....
.....
.....
.....
.....
.....

Copyright International Organization for Standardization
Provided by IHS under license with ISO
No reproduction or networking permitted without license from IHS

Not for Resale

ISBN 2-8318-4636-6



ICS 35.110

Typeset and printed by the IEC Central Office
GENEVA, SWITZERLAND

Copyright International Organization for Standardization
Provided by IHS under license with ISO
No reproduction or networking permitted without license from IHS

Not for Resale