INTERNATIONAL STANDARD

ISO/IEC 11518-6

Second edition
2000-10

Information technology – High-Performance Parallel Interface –

Part 6: Physical Switch Control (HIPPI-SC)



Reference number
ISO/IEC 11518-6:2000(E)

Copyright International Organization for Standardization
Reproduced by IHS under license with ISO
No reproduction or networking permitted without license from IHS

Not for Resale

Copyright International Organization for Standardization
Reproduced by IHS under license with ISO
No reproduction or networking permitted without license from IHS
Not for Resale

INTERNATIONAL STANDARD

ISO/IEC 11518-6

Second edition
2000-10

Information technology – High-Performance Parallel Interface –

Part 6: Physical Switch Control (HIPPI-SC)

© ISO/IEC 2000

All rights reserved. Unless otherwise specified, no part of this publication may be reproduced or utilized in any form or by any means, electronic or mechanical, including photocopying and microfilm, without permission in writing from the publisher.

ISO/IEC Copyright Office • Case postale 56 • CH-1211 Genève 20 • Switzerland



PRICE CODE M

For price, see current catalogue

Copyright International Organization for Standardization
Reproduced by IHS under license with ISO
No reproduction or networking permitted without license from IHS

Not for Resale

CONTENTS

Page

FOREWORD 3
INTRODUCTION 4
Clause
1 Scope 5
2 Normative references 5
3 Definitions and conventions 5
3.1 Definitions 5
3.2 Editorial conventions 7
4 CCI and I-Field formats 7
4.1 Format 7
4.2 Source routing 8
4.3 Logical address 8
4.4 Reserved Logical Addresses 8
5 Switch behavior 10
5.1 Use of INTERCONNECT signals 10
5.2 CLOCK signal 10
5.3 Connection request successful 10
5.4 Breaking a connection 11
5.5 Connection request unsuccessful 11

Annex A (informative) Routing with the CCI and I-Field 13
Annex B (informative) Implementation considerations 19
Bibliography 25

Figure 1 – CCI and I-Field format 9
Figure 2 – I-Field with source routing, D = 0, and 16 by 16 switch 9
Figure 3 – I-Field with source routing, D = 1, and 32 by 32 switch 9
Figure 4 – I-Field with logical addressing and D = 0 9
Figure 5 – I-Field with logical addressing and D = 1 9
Figure A.1 – Physical layer switch example 13

Copyright International Organization for Standardization
Reproduced by IHS under license with ISO
No reproduction or networking permitted without license from IHS Not for Resale

INFORMATION TECHNOLOGY – HIGH-PERFORMANCE PARALLEL INTERFACE –

Part 6: Physical Switch Control (HIPPI-SC)

FOREWORD

1) ISO (International Organization for Standardization) and IEC (International Electrotechnical Commission) form the specialized system for worldwide standardization. National bodies that are members of ISO or IEC participate in the development of International Standards through technical committees established by the respective organization to deal with particular fields of technical activity. ISO and IEC technical committees collaborate in fields of mutual interest. Other international organizations, governmental and non-governmental, in liaison with ISO and IEC, also take part in the work.

2) In the field of information technology, ISO and IEC have established a joint technical committee, ISO/IEC JTC1. Draft International Standards adopted by the joint technical committee are circulated to national bodies for voting. Publication as an International Standard requires approval by at least 75 % of the national bodies casting a vote.

3) Attention is drawn to the possibility that some of the elements of this International Standard may be the subject of patent rights. ISO and IEC shall not be held responsible for identifying any or all such patent rights.

International Standard ISO/IEC 11518-6 was prepared by subcommittee 25: Interconnection of information technology equipment, of ISO/IEC joint technical committee 1: Information technology.

This second edition cancels and replaces the first edition published in 1996. The changes are upward compatible and consist mainly of a local address self-discovery method detailed in annex B.3.

This publication has been drafted in accordance with the ISO/IEC Directives, Part 3.

ISO/IEC 11518 consists of the following parts, under the general title *Information technology – High-Performance Parallel Interface:*

– *Part 1: Mechanical, electrical, and signalling protocol specification (HIPPI-PH)*
– *Part 2: Framing Protocol (HIPPI-FP)*
– *Part 3: Encapsulation of ISO/IEC 8802-2 (IEEE Std 802.2) Logical Link Control Protocol Data Units (HIPPI-LE)*
– *Part 4: Mapping of HIPPI to IPI device generic command sets (HIPPI-IPI)*
– *Part 5: Memory Interface (HIPPI-MI)*
– *Part 6: Physical Switch Control (HIPPI-SC)*
– *Part 8: Mapping to Asynchronous Transfer Mode (HIPPI-ATM)*
– *Part 9: Serial Specification (HIPPI-Serial)*

Annexes A and B are for information only.

--`,,`,,`,`,,`---

Copyright International Organization for Standardization
Reproduced by IHS under license with ISO
No reproduction or networking permitted without license from IHS Not for Resale

INTRODUCTION

This part of ISO/IEC 11518 defines the control for HIPPI physical layer switches. HIPPI by itself is an efficient simplex high-performance point-to-point interface. The physical switch control allows the interconnection of multiple HIPPI based equipments with HIPPI physical layer switches.

Characteristics of this HIPPI physical switch control protocol include:

– support for both source routing and destination addresses;

– I-Fields and CCIs can span multiple physical layer switches within a fabric;

– when a Destination end-point receives a packet, it can easily manipulate the I-Field received to return a reply packet to the Source;

– support for physical layer switches with differing numbers of ports, all within the same fabric;

– specified reserved addresses to aid address self-discovery, switch management, and switch control.

Copyright International Organization for Standardization
Reproduced by IHS under license with ISO
No reproduction or networking permitted without license from IHS Not for Resale

INFORMATION TECHNOLOGY – HIGH-PERFORMANCE PARALLEL INTERFACE –

Part 6: Physical Switch Control (HIPPI-SC)

1 Scope

This part of ISO/IEC 11518 specifies a control for physical layer switches using the High-Performance Parallel Interface (HIPPI), a high-performance point-to-point interface between data-processing equipment. This part of ISO/IEC 11518 does not protect against errors introduced by intermediate devices interconnecting multiple HIPPI-PHs.

The purpose of this part of ISO/IEC 11518 is to facilitate the development and use of the HIPPI in computer systems by providing common physical switch control. It provides switch control structures for physical layer switches interconnecting computers, high-performance display systems, and high-performance, intelligent block-transfer peripherals. This part of ISO/IEC 11518 also applies to point-to-point HIPPI topologies.

2 Normative references

The following normative documents contain provisions which, through reference in this text, constitute provisions of this part of ISO/IEC 11518. For dated references, subsequent amendments to, or revisions of, any of these publications do not apply. However, parties to agreements based on this part of ISO/IEC 11518 are encouraged to investigate the possibility of applying the most recent edition of the normative documents indicated below. For undated references, the latest edition of the normative document referred to applies. Members of IEC and ISO maintain registers of currently valid International Standards.

ISO/IEC 11518-1:1995, *Information technology – High-Performance Parallel Interface – Part 1: Mechanical, electrical, and signalling protocol specification (HIPPI-PH)*

3 Definitions and conventions

3.1 Definitions

For the purposes of this part of ISO/IEC 11518, the following definitions apply.

3.1.1
connection
condition of the HIPPI-PH when data transfers from a Source end-point to a Destination end-point are possible

3.1.2
connection control information (CCI)
a parameter sent as part of the sequence of operations establishing a connection from a Source to a Destination

3.1.3
end-point
the equipment at either end of the fabric for a particular connection

3.1.4
destination
the equipment at the end of the interface that receives the data

Copyright International Organization for Standardization
Reproduced by IHS under license with ISO
No reproduction or networking permitted without license from IHS Not for Resale

3.1.5
destination end-point
the equipment at the end of the fabric that receives the data

3.1.6
fabric
a group of one or more physical layer switches that can be traversed with one I-Field

3.1.7
I-Field
a 32-bit field that is sent as part of the sequence of the physical layer operations establishing a connection from a Source to a Destination

3.1.8
interface
the set of protocols and control signals used to connect a Source and Destination, as defined by HIPPI-PH

Within a fabric, an interface connects an end-point to a switch or a switch to a neighbouring switch.

3.1.9
Logical Address
an address stored in an I-Field that uniquely identifies a Destination end-point or set of end-points

3.1.10
nibble
a 4-bit entity

3.1.11
optional
features that are not required by this part of ISO/IEC 11518. However, if any optional feature defined by this part of ISO/IEC 11518 is implemented, it shall be implemented according to this part of ISO/IEC 11518

3.1.12
packet
a data set, as defined by HIPPI-PH, sent from Source to Destination. A packet is composed of one or more bursts

3.1.13
physical layer switch
a device which allows a single HIPPI physical layer interface to switch between multiple HIPPI physical layer interfaces without involving protocols above the HIPPI Mechanical, Electrical, and Signalling Protocol Specification (HIPPI physical layer)

3.1.14
source
the equipment at the end of the interface that transmits the data

3.1.15
source Address
an address stored in an I-Field that uniquely identifies a Source end-point or set of end-points

3.1.16
source end-point
the equipment at the end of the fabric that transmits the data

Copyright International Organization for Standardization
Reproduced by IHS under license with ISO
No reproduction or networking permitted without license from IHS Not for Resale

3.1.17
source routing
a means of packet routing whereby the Source end-point specifies the action of each switch on the way to the Destination

3.2 Editorial conventions

In this part of ISO/IEC 11518, certain terms that are proper names of signals, state mnemonics, or similar terms are printed in uppercase to avoid possible confusion with other uses of the same words (for example, REQUEST). Any lowercase uses of these words have the normal technical English meaning.

A number of conditions, sequences, parameters, events, states, or similar terms are printed with the first letter of each word in uppercase and the rest lowercase (for example, Source). Any lowercase uses of these words have the normal technical English meaning.

4 CCI and I-Field formats

4.1 Format

The connection control information (CCI) shall be used for controlling HIPPI physical layer switches. Within ISO/IEC 11518-1 (HIPPI-PH) the CCI is used as the I-Field, and is asserted on the HIPPI-PH Data Bus during a connection sequence. The format of the CCI (I-Field) is shown in figure 1. Examples of CCI and I-Field usage for routing are contained in annex A.

L = Locally Administered (bit 31) = 0 designates that the I-Field is defined by this part of ISO/IEC 11518. L = 1 designates that the rest of the I-Field, bits 30 - 0, are locally administered and are not defined by this part of ISO/IEC 11518.

VU = Vendor_Unique (bits 30,29). The contents of the Vendor_Unique bits are not defined in this part of ISO/IEC 11518. Switches shall pass these bits unmodified to the Destination.

NOTE 1 These bits are available for providing signals to Destinations. Such signals can be used to modify the Destination's behaviour or supply it with additional information on the purpose of the attempted connection.

W = Double-wide (bit 28) = 0 designates that the Source is using the 800 Mbit/s data rate option (DATA BUS is 32 bits wide as defined in HIPPI-PH); the switch shall connect through Cable-A. W = 1 designates that the Source is using the 1 600 Mbit/s data rate option (DATA BUS is 64 bits wide); the switch shall connect through both Cable-A and Cable-B.

NOTE 2 The W bit is used in conjunction with the INTERCONNECT signals on Cable-A and Cable-B. The INTERCONNECT signals, as defined in HIPPI-PH, tell a switch or end-point that the cable is physically attached to an active HIPPI port. The W bit is used to tell the switch, or Destination end-point, whether or not Cable-B is being used in particular connection.

D = Direction (bit 27) = 0, designates that the right-hand end (least significant bits) of the Routing Control field shall be the current sub-field. D = 1 designates that the left-hand end (most significant bits) of the Routing Control field shall be the current sub-field.

NOTE 3 When a reverse path exists, a Destination end-point may return a reply to a received packet by simply using the same I-Field that it received with the D bit complemented. For this to work correctly with source routing (PS = 00) the return path must be symmetrical with the forward path.

PS = Path Selection (bits 26, 25). Used to select either (1) a source route (i.e., a specific route through the switches, with output port numbers specified for each switch) or (2) to specify the Logical Address.

00 = source routing: Source selects the route through the switches.

01 = Logical address: Switches select the first route from a list of possible routes.

10 = reserved

11 = logical address: Switches select a route.

--`,,`,,`-`-`,,`,,`,`,,`---

Copyright International Organization for Standardization
Reproduced by IHS under license with ISO
No reproduction or networking permitted without license from IHS Not for Resale

C = Camp-on (bit 24) = 0 specifies that the switch shall reply with a connection reject sequence if unable to complete the connection. C = 1 specifies that the switch shall attempt to establish a connection until either the connection is completed or the Source aborts the connection request.

Camp-on is used by the Source to tell a switch to wait for the selected path (or paths) to become available, i.e., the switch should not generate a rejected connection sequence because the selected path is busy. The algorithm used by a switch to select among multiple Sources camped-on to a single Destination is implementation-specific and is not specified in this part of ISO/IEC 11518.

NOTE 4 A HIPPI rejected connection has a different set of meanings depending on whether or not the Camp-on feature is being used. See clause B.1 for details.

4.2 Source routing

When PS = 00 (i.e., source routing) the Routing Control field shall be split into multiple sub-fields, with the size of each sub-field dependent upon the size of the switch that is using it. The number of bits in the sub-field is described as $[Log_2N]$ where N is the switch size. For example, a 16 by 16 switch would use a 4-bit sub-field.

When D = 0, a switch shall use the current sub-field (right most bits of the Routing Control field) to select the switch output port. The switch shall right shift the Routing Control field by the number of bits in the sub-field, and shall insert the switch input port number in the left most bits of the Routing Control field. See figure 2.

When D = 1, the same actions occur except that the current sub-field shall be at the left end of the Routing Control field. The Routing Control field shall be shifted left, and the input port number shall be inserted at the right end of the Routing Control field. See figure 3.

A switch shall not alter the I-Field except when PS=00, and then, only the Routing Control field shall be modified.

4.3 Logical address

When PS = 01 or 11 (i.e., logical address) the Routing Control field shall be split into two 12-bit fields. One 12-bit field specifies the address of the Destination end-point(s), the other specifies the address of the Source end-point. When the direction D bit = 0, the right-hand 12 bits shall specify the Destination end-points Logical Address and the left-hand 12 bits shall specify the Source end-points Logical Address (see figure 4). When D = 1, the opposite is true (see figure 5).

4.4 Reserved Logical Addresses

Part of the range of logical addresses is reserved to designate the addresses of network services whose location in the network may vary, and for other network management functions. All others are available for assignment to specific Destinations. The logical addresses assigned at the time this part of ISO/IEC 11518 was approved include the following (shown in hexadecimal notation).

NOTE 5 Later registrations will be added as an addendum to this part of ISO/IEC 11518.

F90 – FBF Trial self-discovery addresses. These addresses are reserved for an iterative address self-discovery algorithm. F9x tests the low-order 4-bit nibble, FAx tests the middle 4-bit nibble, and FBx tests the high-order 4-bit nibble, of the switch port's logical address. If the low-order 4-bit nibble of the trial self-discovery address (i.e., the "x" in Fnx) matches the selected nibble in the switch port's logical address, then the switch shall establish a connection back to a HIPPI Destination that is paired with the HIPPI port requesting the connection, i.e., a loopback. If the trial self-discovery nibble values are not equal, the switch shall reject the connection. For example, if the logical address for port "J" is "xyz" where "x", "y", and "z" are 4-bit nibbles, then loopback connections shall be made when trial logical addresses F9"z", FA"y", and FB"x" are used. (See B.3.3 and B.3.5.) Support of this feature is optional.

Copyright International Organization for Standardization
Reproduced by IHS under license with ISO
No reproduction or networking permitted without license from IHS Not for Resale

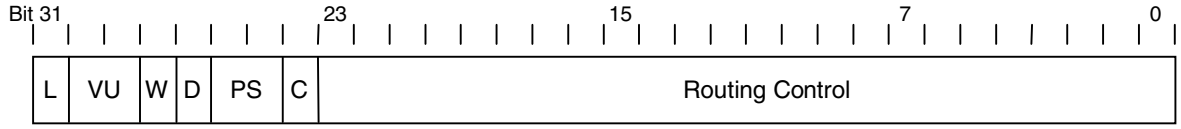

Figure 1 – CCI and I-Field format

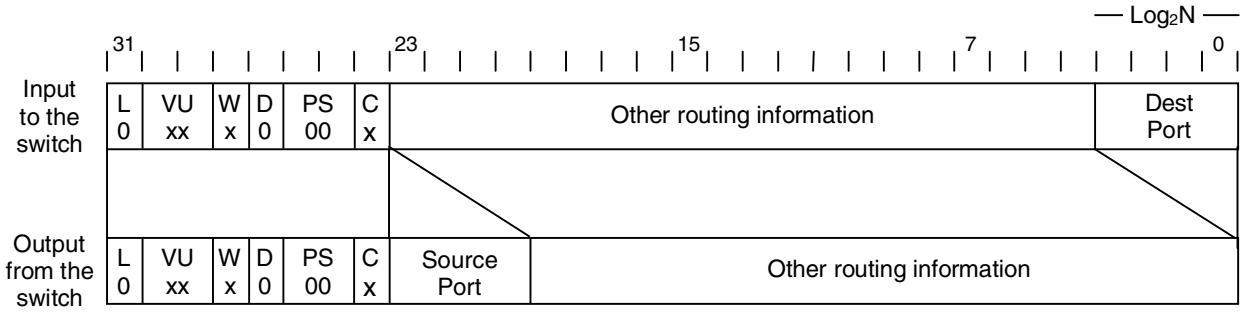

Figure 2 – I-Field with source routing, D = 0, and 16 by 16 switch

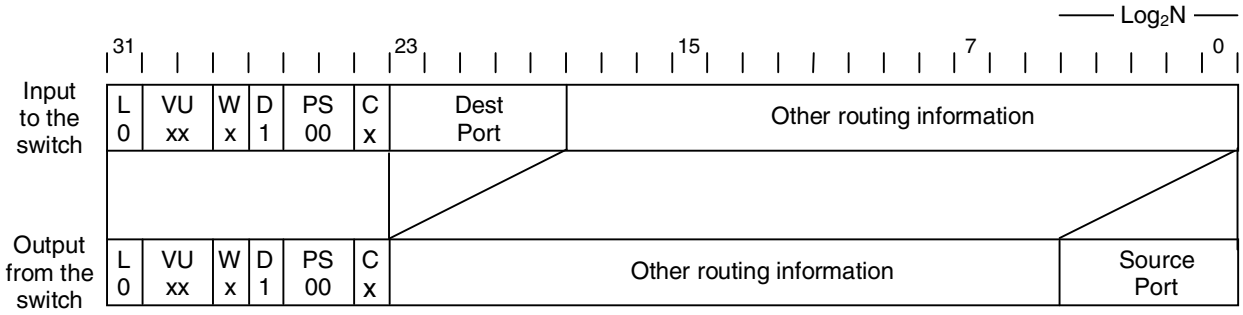

Figure 3 – I-Field with source routing, D = 1, and 32 by 32 switch

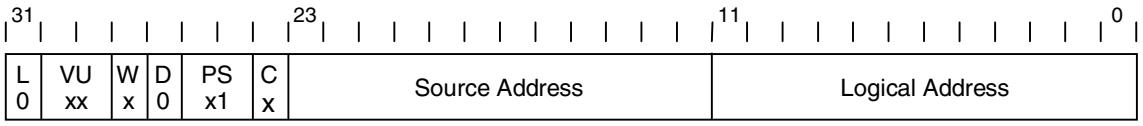

Figure 4 – I-Field with logical addressing and D = 0

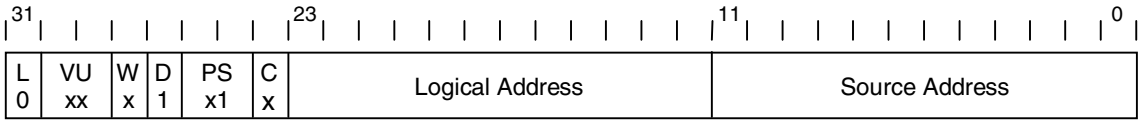

Figure 5 – I-Field with logical addressing and D = 1

FC0 – FDF Reserved for local use

FE0 Messages pertaining to switch configuration, including HIPPI-LE Address Resolution requests as described in RFC 1374 "IP and ARP on HIPPI" [1].

FE1 All IP protocol traffic conventionally directed to the IEEE 802.1 broadcast address as described in RFC 1042 "Standard for IP transmission over 802 networks" [2].

FE2 RFC 1112 Host extensions for IP multicasting Class D addresses not assigned below [3].

--`,,`,,`-`-`,,`,,`,`,,`---

Copyright International Organization for Standardization
Reproduced by IHS under license with ISO
No reproduction or networking permitted without license from IHS
Not for Resale

FE3 RFC 1131 OSPF specification All Routers (Class D address 224.0.0.5) [4].

FE4 RFC 1131 OSPF specification All Designated Routers (Class D address 224.0.0.6) [4].

FE5 – FE7 Reserved

FE8 ISO/IEC 9542:1988 CLNP ES-IS all ES's [5].

FE9 ISO/IEC 9542:1988 CLNP ES-IS all IS's [5].

FEA ISO/IEC 10589:1992 IS-IS all Level 1 IS's [6].

FEB ISO/IEC 10589:1992 IS-IS all Level 2 IS's [6].

FEC ISO/IEC 15802-3:1998, clause 8, MAC Bridging flooding. [7].

FED ISO/IEC 15802-3:1998, clause 8, Bridging Spanning Tree Protocol. [7].

FEE Embedded switch management agent. Support of this feature is optional.

FEF – FFC Reserved

FFD Loopback logical address for switches to use when probing other switches. Support of this feature is optional.

FFE Loopback logical address for hosts to use when probing switches for the host's logical address. This value is reserved for the establishment of a connection back to a HIPPI Destination that is paired with the HIPPI Source requesting the connection. (See B.3.2 and B.3.5.) Support of this feature is optional.

FFF Unknown or unassigned address. This value should never be used to address a Destination or Destinations. It can be used to indicate that the Source is unaware of its Source Address in the CCI, or to signify an unknown Logical Address in higher layer protocols. A HIPPI-SC switch may alter the I-Field, substituting a valid Source Address for this value. Support for this address substitution is optional. Such substitution may be used to aid in discovery of a system's logical switch address by higher layer protocols. (See B.3.1, B.3.2, and B.3.5.)

The protocols used to access these services and the means whereby these services keep track of their configuration of the network are outside the scope of this part of ISO/IEC 11518.

5 Switch behavior

A HIPPI physical switch has input ports (attachments to HIPPI Sources) and output ports (attachments to HIPPI Destinations). These HIPPI ports shall conform to either the HIPPI-PH or HIPPI-Serial specifications. This clause defines how an HIPPI physical switch behaves with regards to the states of the HIPPI-PH control signals on the input and output ports for a particular connection operation.

5.1 Use of INTERCONNECT signals

As defined in HIPPI-PH, each switch input port and output port shall generate an INTERCONNECT signal when that port is "on-line"; i.e., powered on and enabled for HIPPI connections. Each switch input and output port shall monitor the received INTERCONNECT signal and shall use this signal to validate all other HIPPI control signals.

NOTE 6 A switch port may deassert the INTERCONNECT signal when that port is disabled for maintenance or diagnostics.

5.2 CLOCK signal

The HIPPI CLOCK signal generated by the switch output port (a HIPPI Source) shall be continuous and shall conform to the HIPPI-PH specification at all times.

5.3 Connection request successful

Once a connection is completed the switch shall be transparent, with the exception of switch induced latency, to the HIPPI signal sequences.

NOTE 7 The switch acts as a repeater under the constraints imposed by 7.9 of ISO/IEC 11518-1, and can change the number of idle words between bursts or packets.

Copyright International Organization for Standardization
Reproduced by IHS under license with ISO
No reproduction or networking permitted without license from IHS Not for Resale

5.4 Breaking a connection

Either the Source end-point or the Destination end-point may break a connection.

5.4.1 Source deasserts REQUEST

When the Source end-point deasserts the REQUEST signal, the switch shall break the connection. The switch shall not wait for the Destination end-point to deassert the CONNECT signal to break the connection. The Source end-point will see the CONNECT signal go false regardless of Destination end-point actions.

NOTE 8 This immediate disconnection frees the associated input port for the next connection-request. This maximizes the efficiency of the HIPPI attachment by allowing the Source end-point to make a new connection without waiting for the propagation delay and the Destination end-point disconnect turn-around time.

5.4.2 Destination deasserts CONNECT

When the Destination end-point deasserts the CONNECT signal, the connection through the switch shall be broken. The switch shall not wait for the Source end-point to deassert the REQUEST signal to break the connection. The Destination end-point will see the REQUEST signal go false regardless of Source end-point actions.

5.4.3 INTERCONNECT false

If the INTERCONNECT signal, received by either the switch input port or the switch output port, goes false during any stage of a connection then the connection through the switch shall be broken.

5.5 Connection request unsuccessful

Connection requests can be unsuccessful due to:

– unavailable Destination end-points;

– unavailable fabric resources;

– errors.

5.5.1 Down-stream connection reject

A rejected connection sequence can be initiated by either a down-stream switch or the Destination end-point. A rejected connection sequence shall be propagated through the switch without change. When the switch detects the CONNECT signal is false, at the end of the sequence, the connection through the switch shall be broken.

5.5.2 Switch-generated connection reject

The switch input port logic shall initiate a rejected connection sequence to the Source end-point, and shall not complete the connection through the switch, in the following situations:

– when the selected output port(s), or Destination end-point, does not exist or is unavailable. For example, when the INTERCONNECT signal received by the selected output port is false;

– when the selected output port(s) is(are) busy, i.e., connected to some other port, and Camp-on = 0;

– when a data parity error is detected on the I-Field while connecting through this switch. The switch is not obligated to check the I-Field parity after the REQUEST signal has been propagated through the switch;

– when the I-Field Path Selection (bits 26, 25) specifies an addressing mode not supported or disabled;

– when the I-Field Path Selection (bits 26, 25) specifies logical addressing, and the Destination logical address is not mapped to any physical output port;

Copyright International Organization for Standardization
Reproduced by IHS under license with ISO
No reproduction or networking permitted without license from IHS Not for Resale

– when the I-Field Double-wide (bit 28) selection conflicts with the switch capabilities or the end-point capabilities. Clause B.2 discusses such conflicts;

– when the I-Field Locally Administered (bit 31) selection is not supported by the switch.

5.5.3 Connection request contention

When two or more input ports vie for the same output port only one input port can "win". The winner shall be connected through the switch. The loser(s) shall either wait for the output port to become available (i.e., Camp-on = 1), or the input port(s) shall generate a rejected connection sequence (i.e., Camp-on = 0).

Copyright International Organization for Standardization
Reproduced by IHS under license with ISO
No reproduction or networking permitted without license from IHS Not for Resale

Annex A
(informative)

Routing with the CCI and I-Field

A.1 General example

The CCI and I-Field are used to control HIPPI physical layer switches, supporting the interconnection of many HIPPI devices. Figure A.1 is an example of a small general configuration that will be used to describe the operation of the CCI and I-Field as specified in clause 4. Three hosts, A, B, and C, are shown, but there will probably be many more hosts connected in an actual configuration. The switching fabric is the interconnection mechanism, in this example the four switches and the interconnecting HIPPI links.

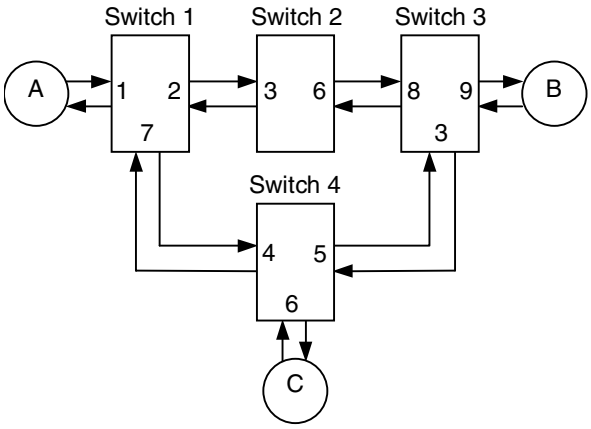

Figure A.1 – Physical layer switch example

Two types of operation are specified: (1) source routing, and (2) logical address. The direction of interpretation of the Routing Control field is also under user control, allowing a Destination end-point to return a reply by simply using the same I-Field that was received with the direction bit complemented.

A.2 Source routing

With source routing, the Source end-point specifies the action of each switch on the way to the Destination. For example, to go from host-A to host-B, host-A could specify 2, 6, 9. This would result in switch-1 selecting output port-2, switch-2 selecting output port-6, and switch-3 selecting output port-9. Alternatively, host-A could have specified 7, 5, 9 to go through switch-4 instead of switch-2.

For connection or packet routing, this involves an end-point (the "originator" or "Source") having to know the physical route to a particular Destination before a connection can be established. When using multiple switches (where the switches have no intelligence with regards to network routing), the Source has to establish the entire physical route for a given connection. Source routing can often facilitate low latency connections because the switches have no burden of decision making during the connection process. However, source routing can be unattractive for a configuration with the following features:

a) large and/or dynamic configuration (the hosts must keep track of the interconnection configuration);

b) "blocking" configuration (there is a path to the Destination available, but it is not the one specified, and the one specified is unavailable);

c) no mechanism that allows a node to "discover" the addresses and associated routes for other nodes.

--`,,`,,`-`-`,,`,,`,`,,`---

Copyright International Organization for Standardization
Reproduced by IHS under license with ISO
No reproduction or networking permitted without license from IHS
Not for Resale

Source routing can be very valuable for diagnostics. By specifying a particular path, a diagnostic program can determine if that path is operable. Source routing can also be attractive when certain paths are more desirable to use than other paths based on criteria that the switches are unaware of, for example, usage costs associated with particular links.

When using source routing with the CCI and I-Field as specified in clause 4, PS = 00 and the Routing Control contains the route information. The eight high-order bits of the I-Field will be called Ctl. If the switches are 16 × 16 switches using 4-bit addresses, and the direction bit (D) = 0, then to go from host-A to host-B through switch-2, host-A would set the I-Field = Ctl, x, x, x, 9, 6, 2, (in hexadecimal). When received at switch-1, switch-1 picks off the low order 4 bits (the low order because D=0, 4 bits because the switch size = 16 × 16) and connects input port-1 to output port-2. It also shifts the Routing Control field of the I-Field to the right and inserts switch-1's input port number in the left end of the Routing Control field. When received at switch-2, the I-Field will be Ctl, 1, x, x, x, 9, 6. Likewise, when it reaches switch-3 it will be Ctl, 3, 1, x, x, x, 9. When it reaches host-B, it will be Ctl, 8, 3, 1, x, x, x.

In summary:

Ctl = L = 0 (not a locally administered I-Field)
VU = xx (Vendor Unique bits ignored)
W = x (this example is not concerned with width)
D = 0 (direction bit)
PS = 00 (source routing)
C = x (this example is not concerned with Camp-on)

At A and input to switch-1:	I-Field = Ctl, x, x, x, 9, 6, 2
At input to switch-2:	I-Field = Ctl, 1, x, x, x, 9, 6
At input to switch-3:	I-Field = Ctl, 3, 1, x, x, x, 9
At host-B:	I-Field = Ctl, 8, 3, 1, x, x, x

Host-B can send a reply packet back to host-A by complementing the D bit (direction) in the Ctl field. Now the switches will use the left most bits of the Routing Control field as the output port selector, shift the Routing Control field to the left, and insert the input port on the right end. In summary, it would look like:

Ctl = L = 0 (not a locally administered I-Field)
VU = xx (Vendor Unique bits ignored)
W = x (this example is not concerned with width)
D = 1 (direction bit *Note that it changed*)
PS = 00 (source routing)
C = x (this example is not concerned with Camp-on)

At B and input to switch-3:	I-Field = Ctl, 8, 3, 1, x, x, x
At input to switch-2:	I-Field = Ctl, 3, 1, x, x, x, 9
At input to switch-1:	I-Field = Ctl, 1, x, x, x, 9, 6
At host-A:	I-Field = Ctl, x, x, x, 9, 6, 2

Switches other than the 16 × 16 switches of the example can also be used. In that case the number of bits used by each switch will be determined by the switch size. For example, a 64 × 64 switch will use 6 bits for selection of its output port, shift off 6 bits, and add in 6 bits of input port number.

Mixing switches of different sizes in the same fabric also works. Each switch uses, and shifts, the appropriate number of bits.

This use of the Routing Control field assumes that all of the cabling is symmetrical. Because the backwards path is not guaranteed to be available,

a) host-B can use the received I-Field as described above with multiple tries or Camp-on, or

b) host-B can use an alternate path which must be determined by other means, for example a look-up table.

Copyright International Organization for Standardization
Reproduced by IHS under license with ISO
No reproduction or networking permitted without license from IHS Not for Resale

The reverse path problem is minimized with a system running under the following rules:

– a fabric-wide limit for maximum connection time. This will minimize the time it takes for a particular path to become available;
– the switches have the capability of allowing connection requests to "camp-on" a particular output port to wait for it to become available;
– the output port contention algorithm is fair.

A.3 Using a logical address

Logical addresses specify where the packet is to be delivered, not the route to take to get there. Source end-points use the same Logical Address to reach a particular host, no matter where the Source is located; note that this is not the case with source routing.

With logical addresses the intermediate switches are responsible for picking an appropriate route. The Path Selection bits of the I-Field tell the switches whether to

- use only the first output port from a list of possible ports, or
- to select any output port from the list of possible ports.

Hence, the switches that use logical addresses must do the port selection as well as the port switching, where source routing switches only need to do the port switching.

A major advantage of using logical addresses is that only the switches need to know the fabric interconnection topology, and the hosts only need to know the logical addresses. Hence, if a link or switch fails, the other switches can route around it without the hosts having to know about it or do anything special.

Logical addresses are specified in clause 4; PS = 01 or 11 and the Routing Control field contains the address information. The Routing Control field contains two 12-bit fields, one for the Source Address and the other for the Logical Address. The direction bit (D) specifies which field is which.

The use of symmetrical cabling is not necessary with Logical addresses, just the need for a path back to the Source. Management is also easier since only the switches need to know how to route among themselves, the hosts do not need to know the fabric interconnection configuration, and there will probably be many fewer switches than hosts. The switches can also use alternate paths to avoid congestion without having to go back to the Source host and try another whole route.

Security is also enhanced by the fact that the switches control the routing and can exercise some control (via their look-up tables) over which paths are legitimate for certain hosts. One feature that is desirable is to have some way for the hosts to "discover" the Logical Address of the hosts, for example, via a name server.

The Logical Address may specify either the end-point of the fabric (i.e., fabric-specific), or the unique address of the host attached to the fabric end-point (i.e., host-specific). The difference between the two is seen when a host is moved from one fabric end-point to another. In this case, the fabric-specific address would change but the host-specific address would not change. There are advantages and disadvantages to both schemes.

It is envisioned that switches can be built to use look-up tables to house routing paths to Destinations. A look-up table can be indexed using a 12-bit Logical Address. The look-up table would be used to hold a possible route (or routes) for each Destination. The management of the tables can be based on either of the addressing schemes: fabric-specific or host-specific.

--`,,`,,`-`-`,,`,,`,`,,`---
Copyright International Organization for Standardization
Reproduced by IHS under license with ISO
No reproduction or networking permitted without license from IHS
Not for Resale

A.3.1 Fabric-specific addresses

In the following example, the fabric-specific addresses specify fabric end-points. Several schemes can be envisioned for fabric-specific addresses, but in this example the fabric-specific addresses are further broken into a switch number and port number. The fabric-specific address of host-A in figure A.1 is 1-1, host-B is 3-9, and host-C is 4-6. The eight high-order bits of the I-Field are called Ctl.

If the direction bit (D) = 0, then to go from host-A to host-B, host-A would set the I-Field = Ctl, 1-1, 3-9 (in hexadecimal) (3-9 is the Logical Address and 1-1 is the Source Address). When received at switch-1, switch-1 picks off the low order 12 bits (the low order because D = 0) as the Logical Address. Even though these 12 bits contain a logical partition between the bits holding the "switch number" and the bits holding the "port number", all 12 bits can be used together as an index into the look-up table. Because this switch is not the switch specified in the Destination Logical Address, the look-up table will provide one or more possible routes to the Destination end-point (we will assume that it picks output port-2 on switch-1). The I-Field is then passed, unchanged, to switch-2. None of the switches change the I-Field as the packet is routed. A similar action occurs at switch-2, passing the I-Field to switch-3. When switch-3 receives the I-Field, its look-up table yields the output port number specified in the Logical Address (the 9 of 3-9), and selects output port-9. In summary:

Ctl = L = 0 (not a locally administered I-Field)
VU = xx (Vendor Unique bits ignored)
W = x (this example is not concerned with width)
D = 0 (direction bit)
PS = 01 or 11 (logical address)
C = x (this example is not concerned with Camp-on)

At host-A and input to switch-1:	I-Field = Ctl, 1-1, 3-9
At input to switch-2:	I-Field = Ctl, 1-1, 3-9
At input to switch-3:	I-Field = Ctl, 1-1, 3-9
At host-B:	I-Field = Ctl, 1-1, 3-9

Host-B can send a reply packet back to host-A by complementing the D bit (direction) in the Ctl field. Now the switches will use the left 12 bits of the Routing Control field as the Logical Address and the right 12 bits as the Source Address. (Note that the actions taken by the receiving node are the same for both source routing and logical addresses.) In summary, it would look like:

Ctl = L = 0 (not a locally administered I-Field)
VU = xx (Vendor Unique bits ignored)
W = x (this example is not concerned with width)
D = 1 (direction bit *Note that it changed*)
PS = 01 or 11 (logical address)
C = x (this example is not concerned with Camp-on)

At host-B and input to switch-3:	I-Field = Ctl, 1-1, 3-9
At input to switch-2:	I-Field = Ctl, 1-1, 3-9
At input to switch-1:	I-Field = Ctl, 1-1, 3-9
At host-A:	I-Field = Ctl, 1-1, 3-9

Note that the fabric-specific address does not need to be explicitly broken into switch number and port number fields, it could be all one field. Each switch still determines the path to take to the final Destination, i.e., which output port to use.

--`,,`,,`,`,,`---

Copyright International Organization for Standardization
Reproduced by IHS under license with ISO
No reproduction or networking permitted without license from IHS Not for Resale

A.3.2 Host-specific addresses

In the following example, the host-specific addresses specify unique hosts. For example, the 12-bit host-specific Logical Address for host-A in figure A.1 could be hexadecimal "AAA". Both host-B and host-C would use this address when establishing a connection with host-A. In the following example, the host-specific address for host-B is hexadecimal "BBB". Note that the host-specific addresses are independent of the fabric end-point addresses.

If hosts A and B have addresses "AAA" and "BBB", then to go from host-A to host-B, host-A would set the I-Field = Ctl, AAA, BBB (this assumes that the direction bit = 0). When received at switch-1, switch-1 uses the low order 12 bits (the low order because D=0) as an index into a look-up table to obtain the possible output ports associated with the Logical Address. Switch-1 could determine that output port-2 can be used to reach Destination BBB. Switch-2 would then use the same process to determine that it should use output port-9. Alternatively, switch-1 could have chosen to use output port-7; passing the connection through switch-4 to get to switch-3. In summary:

Ctl = L = 0 (not a locally administered I-Field)
VU = xx (Vendor Unique bits ignored)
W = x (this example is not concerned with width)
D = 0 (direction bit)
PS = 01 or 11 (logical address)
C = x (this example is not concerned with Camp-on)

At host-A and input to switch-1:	I-Field = Ctl, AAA, BBB
At input to switch-2:	I-Field = Ctl, AAA, BBB
At input to switch-3:	I-Field = Ctl, AAA, BBB
At host-B:	I-Field = Ctl, AAA, BBB

Host-B can send a reply packet back to host-A by complementing the D bit (direction) in the Ctl field. Now the switches will use the left 12 bits of the Routing Control field as the Logical Address and the right 12 bits as the Source Address. (Note that the actions taken by the receiving node are the same for all of the routing schemes described.) In summary, it would look like:

Ctl = L = 0 (not a locally administered I-Field)
VU = xx (Vendor Unique bits ignored)
W = x (this example is not concerned with width)
D = 1 (direction bit *Note that it changed*)
PS = 01 or 11 (logical address)
C = x (this example is not concerned with Camp-on)

At host-B and input to switch-3:	I-Field = Ctl, AAA, BBB
At input to switch-2:	I-Field = Ctl, AAA, BBB
At input to switch-1:	I-Field = Ctl, AAA, BBB
At host-A:	I-Field = Ctl, AAA, BBB

Host-specific addresses have the advantage that when hosts are moved from one fabric end-point to another, the host-specific address does not change and hence the address tables in the other hosts do not need to be changed. Note that the look-up tables within the switches do need to be updated to reflect the new route to the host. Some disadvantages of host-specific addresses might be longer fabric reconfiguration times to update the switch tables, and problems with keeping the host-specific addresses unique (i.e., no duplicate addresses).

– Fabric-specific addresses have the advantages of guaranteeing address uniqueness and quicker fabric reconfiguration.

– By specifying the address sub-fields of the I-Field as unpartitioned, the sub-fields can be used for fabric-specific or host-specific addresses.

--`,,`-`-`,,`,,`,`,,`---

Copyright International Organization for Standardization
Reproduced by IHS under license with ISO
No reproduction or networking permitted without license from IHS Not for Resale

A.4 Connections between fabrics

As defined in clause 4 the number of hosts available on a single fabric of HIPPI switches is limited to 4096-112, or 3984. Also the fabric is limited to a single type of Path Selection at one time, i.e., you cannot go part way through a fabric with a source route and then change over to a logical address.

To go beyond 3984 connections, or to connect dissimilar fabrics, a gateway will probably be required. The gateway would use higher layers in the HIPPI protocols to find an address, for example, an IEEE 48-bit address (see HIPPI-LE), which would be translated to a new CCI and I-Field for the next fabric.

Copyright International Organization for Standardization
Reproduced by IHS under license with ISO
No reproduction or networking permitted without license from IHS Not for Resale

Annex B
(informative)

Implementation considerations

B.1 Special considerations for Camp-on

The use of the Camp-on feature alters the possible reasons for a rejected connection sequence to occur.

B.1.1 Camp-on not selected

When Camp-on = 0, a received rejected connection sequence tells the Source end-point that either a network resource is busy (for example, the selected switch output port) or that the Destination end-point has rejected the connect request (for example, out of buffer space). Because a switch output port being busy may be a fairly common occurrence, the Source end-point should not treat the rejected connection as an abnormal connection state, for example, it should not log the rejected connection as an error.

B.1.2 Camp-on selected

When Camp-on = 1, a received rejected connection sequence tells the Source end-point that the switch fabric was available, but the Destination end-point is overloaded (for example, out of buffer space). Because an overloaded Destination end-point may be an uncommon and/or an undesirable occurrence, the Source end-point may want to treat this connection request as an exception, for example, log as error.

Note that intermediate fabric resources may be tied up indefinitely by long-duration successful connections, or pending connection requests that are using the Camp-on feature.

B.2 Interpretation of the W bit and INTERCONNECT signals

HIPPI-PH defines a 1 600 Mbit/s option for the use of HIPPI which uses a second set of HIPPI signals (Cable-B) to transfer additional data and parity while connection control is operating on the primary Cable-A. HIPPI-PH discusses proper interpretation of the INTERCONNECT signals on Cable-A and Cable-B to determine if a HIPPI interface between a Source and Destination is capable of supporting double width operations.

The W bit within the CCI field is used to specify the Source end-point's intent to use Cable-B for the duration of the connection to the Destination end-point. The Destination should ignore all data and parity signals on Cable-B until BURST is asserted by the Source for an accepted 64 bit connection.

--`,,`,,`-`-`,,`,,`,`,,`---

Copyright International Organization for Standardization
Reproduced by IHS under license with ISO
No reproduction or networking permitted without license from IHS Not for Resale

Since the value of the W bit can conflict with the state of the INTERCONNECT lines on Cable–A and Cable-B, the following table provides the actions which should be taken upon receipt of the CCI by Destinations which are either Destination end-points or the input ports of intermediate HIPPI switches.

SOURCE			DESTINATION	
I-A	I-B	W bit	Type	Action taken
0	N/A	any	32	ignore
0	any	any	64	ignore
1	N/A	0	32	accept (32 bits)
1	0	0	64	accept (32 bits)
1	N/A	1	32	reject
1	0	1	64	reject
1	1	0	64	accept (32 bits)
1	1	1	64	accept (64 bits)

where

I-A is the logical AND of the two Cable-A INTERCONNECT signals exchanged between Source and Destination.

I-B is the logical AND of the two Cable-B INTERCONNECT signals exchanged between Source and Destination. Certain states are not applicable as a 32 bit Destination is unable to determine the state of a Sources Cable-B.

W bit is the value of the W bit provided by the Source end-point.

Type is the Destinations HIPPI capability: 32 if only Cable-A is installed, 64 if a Cable-B interface is present.

Action Taken is the Destinations response:

ignore indicates that no action should be taken in the absence of both INTERCONNECT signals on Cable-A;

accept indicates that the connection is acceptable pending examination of other CCI fields;

reject the Destination should reject the connection as the W bit value contradicts the state of the INTERCONNECT lines.

B.3 Logical address self-discovery by a host connected to a HIPPI-SC switch

Some applications require that a HIPPI host connected to a HIPPI switch be able to discover what the switch thinks that HIPPI host's Source logical address is. This clause discusses methods available when a host is connected by a HIPPI Source/Destination pair with both cables connected to the same HIPPI-SC switch port. All of the addresses in this clause are in hexadecimal notation. The precedence for address self-discovery procedures is:

a) unknown or unassigned address plus loopback logical address;

b) trial self-discovery addresses; and

c) received logical address.

Some reserved logical address, as defined in 4.4 and shown below, can be used for logical address self-discovery.

F90 – FBF Trial self-discovery addresses

FFE Loopback logical address

FFF Unknown or unassigned address

Copyright International Organization for Standardization
Reproduced by IHS under license with ISO
No reproduction or networking permitted without license from IHS Not for Resale

B.3.1 Substitution for the unknown address

This feature is optional in HIPPI-SC compliant switches. When a switch supporting this feature receives an I-Field with a Source Logical Address = FFF (i.e., unknown or unassigned address) the switch substitutes a pre-configured logical address for the Source Logical Address before transmitting the I-Field to the selected output port. The method by which this logical address is configured is outside the scope of this document. The effect of this action is to inform the Destination of the Source's logical address, even when the Source does not know it.

B.3.2 Loopback logical address

This feature is optional in HIPPI-SC compliant switches. When a switch supporting this feature receives an I-Field with a Destination Logical Address = FFE (i.e., loopback logical address) it connects the input port to the output port with the same number as the input port. This may be used as an aid in a loopback diagnostic test, or in address self-discovery.

Using the unknown logical address, and loopback logical addresses, with a switch that supports them, a host can discover its own logical address by asserting the REQUEST signal with the I-Field = 03FFFFFE. This value uses a PS field of 01 to select logical addressing, and Camp-on. The host will receive the I-Field value of 03xyzFFE, where "xyz" is its own logical address as long as "xyz" ≠ FFF.

B.3.3 Using trial self-discovery addresses

Trial self-discovery addresses, as specified in 4.4, can be used in an iterative fashion to determine a host's logical address after it has been determined that unknown and loopback logical addresses are not supported. Each group of connection trials, with 16 possible connection trials per group, can determine one 4-bit nibble of the logical address. Hence, determining a 12-bit logical address requires three groups, or a maximum of 48 total trials.

B.3.4 Using the received Logical Address

A less direct, and possibly less reliable, method of address self-discovery is to simply use the Destination logical address from any logical address I-Field that the host receives. This method depends upon some other network device doing a connection to the host.

B.3.5 Host's address self-discovery algorithm

An example algorithm, in pseudo-code for a HIPPI host, that combines the self-discovery techniques, and also will work with switches that do not support the loopback address and unknown address substitution, is detailed below. Note that a HIPPI host is not required to implement this pseudo-code, but if host Logical Address self-discovery is desired, then this pseudo-code can be used as a guide. The notation ASD stands for address self-discovery. The host's Logical Address is called xyz, where each letter corresponds to a 4-bit nibble.

B.3.5.1 ASD1000

Initialize the trial address value, and D_Adrs (storing the received Logical Address from another host's unexpected connection). If this host's Destination side is already connected, then wait for it to finish before starting, i.e., you cannot do a loopback if this host's Destination is already in use.

```
Set Trial_Address = F90, i.e., Initialize Trial_Address
Set D_Adrs = FFF, i.e., Initialize to "Unknown"
IF the host's HIPPI Destination is not connected
   THEN Goto ASD1010
   ELSE wait for host's HIPPI Destination to finish
```

--`,,`-`-`,,`,,`,`,,`---

Copyright International Organization for Standardization
Reproduced by IHS under license with ISO
No reproduction or networking permitted without license from IHS Not for Resale

B.3.5.2 ASD1010

Try using the loopback and logical address substitution features to determine the host's Logical Address as described in B.3.1 and B.3.2.

Issue Connection Request with I-Field = 03FFFFFE
PS = 01, i.e., Logical Addresses
Camp-on = 1, i.e., wait if already busy
Source Address = FFF, i.e., Unknown
Destination Address = FFE, i.e., Loopback
Goto ASD1020

B.3.5.3 ASD1020

Wait for the host's Destination side to receive a connection request. If the switch supports the loopback address, but not the address substitution, the Source Address in the received I-Field will be FFF, i.e., unchanged. Since address substitution did not work, try the trial self-discovery address procedure next.

IF Connect with I-Field = 03FFFFFE
THEN Break the connection on the Source side
Goto ASD1030

If everything works as scheduled, then the host will receive a looped back connection request with the host's Logical Address in the Source Address field of the received I-Field.

ELSE IF Connect with I-Field = 03xyzFFE
THEN xyz is the Host's Logical Address
Set xyz = I-Field's xyz value
Break the connection on the Source side
EXIT; the Logical Address = xyz

If a connection from another host occurs while trying this operation, i.e., ships passing in the night, then check to see if it used a source route or logical addresses. If it is a source route, then ignore the I-Field received. Otherwise, the I-Field must contain logical addresses; save the Destination Address of the received I-Field for use as the host's Logical Address if it is not found another way. After processing this unexpected connection, wait for the queued (with Camp-on set) Connection Request issued by ASD1010.

ELSE IF Connect with other I-Field
THEN another host is trying to connect
IF PS = 00 in received I-Field, i.e., source route
THEN Goto ASD1020
ELSE Set D_Adrs = I-Field Destination Address
Goto ASD1020

If the switch does not support loopback addresses, then it may reject the connection request. If so, then try the trial self-discovery address procedure next.

ELSE IF Connection Reject
THEN Goto ASD1030

If the host's Source-side connection request is completed, without having first completed the host's Destination-side connection, then the Source is not in loopback and must be directly connected to another host rather than to a switch.

ELSE IF Source-side connection complete AND
Destination-side connection not complete
THEN host is connected to another host
EXIT; the Logical Address = don't care

Copyright International Organization for Standardization
Reproduced by IHS under license with ISO
No reproduction or networking permitted without license from IHS Not for Resale

If it is not connected to another host, and does not support loopback addresses, then it should time out; try the trial self-discovery address procedure next.

ELSE IF Connection not complete AND Timeout
THEN Goto ASD1030

B.3.5.4 ASD1030

Try a series of trial self-discovery addresses to determine the host's logical address, as described in 4.4 and B.3.3.

Issue Connection Request with:
PS = 01, i.e., Logical Addresses
Camp-on = 1, i.e., wait if already busy
Source address = FFF, i.e., Unknown
Destination Address = Trial_Address
Goto ASD1040

B.3.5.5 ASD1040

Wait for the host's Destination side to receive a connection request. If the low-order nibble of this self-discovery address is the same as the selected nibble of the switch port's Logical Address, then the connection should be completed.

IF Connection with I-Field = 03FFFF9x
THEN we have found the low-order nibble value
Set z = low-order nibble of Trial_Address
Set Trial_Address = FA0
Break the connection on the Source side
Goto ASD1030
ELSE IF Connection with I-Field = 03FFFFAx
THEN we have found the middle nibble value
Set y = low-order nibble of Trial_Address
Set Trial_Address = FB0
Break the connection on the Source side
Goto ASD1030
ELSE IF Connection with I-Field = 03FFFFBx
THEN we have found the high-order nibble value
Set x = low-order nibble of Trial_Address
Break the connection on the Source side
EXIT; the Logical Address = xyz

If a connection from another host occurs while trying this operation (i.e., ships passing in the night) then check to see if it used a source route or logical addresses. If it is a source route, then ignore the I-Field received. Otherwise, the I-Field must contain logical addresses; save the Destination Address of the received I-Field for use as the host's Logical Address if it is not found another way. After processing this unexpected connection, wait for the queued (with Camp-on set) Connection Request issued by ASD1030.

ELSE IF Connect with other I-Field
THEN another host is trying to connect
IF PS = 00 in received I-Field, i.e., source route
THEN Goto ASD 1040
ELSE Set D_Adrs = I-Field Destination Address
Goto ASD1040

--`,,`,,`-`-`,,`,,`,`,,`---
Copyright International Organization for Standardization
Reproduced by IHS under license with ISO
No reproduction or networking permitted without license from IHS Not for Resale

If the low-order nibble of the self-discovery address does not match the selected nibble of the switch port's Logical Address, or the switch does not support the trial self-discovery address feature, then the connection will be rejected, or will time out.

ELSE IF Connection Reject or Timeout
THEN Goto ASD1050

B.3.5.6 ASD1050

Increment the trial self-discovery address. Check to see if all possible values for this nibble have been tried. If not, try the next value. If all 16 have been tried with no success, then the switch is not responding or does not support the trial self-discovery procedure.

Increment Trial_Address
IF low-order nibble of Trial_Address ≠ 0
THEN Goto ASD1030

As a last resort, use the Destination Address value contained in the I-Field of a connection from another host, if one was received while executing this address self-discovery algorithm. Note that if the substitution for the unknown address, or the trial self-discovery address technique, did not work, and no connection was received from another host, then the Logical Address value is set to unknown, i.e., FFF (the initial value set in ASD1000).

ELSE Set xyz = D_Adrs
EXIT; the Logical Address = xyz

B.4 CONNECT and READY signals

Since a clock signal does not accompany the CONNECT and READY signals, using the internal clock of a HIPPI switch implementation to strobe the CONNECT and READY signals may result in internal signals wider or narrower than expected due to sampling as the signals are changing. ISO/IEC 11518-1, HIPPI-PH, specifies that the CONNECT and READY signals are asserted, and deasserted, for a minimum of four HIPPI-PH CLOCK periods.

If the HIPPI Destination has a faster CLOCK than the HIPPI-SC implementation, and the Destination sends long sequences of minimum width READY signals (i.e., continuous back-to-back eight-CLOCK-period READY indications) then there is the possibility of losing one in 5 000 READY indications. Lost READY indications should not occur unless both conditions are met, i.e., a pathological case. HIPPI-PH, ISO/IEC 11518-1, 5.3.6, describes the possibility of lost READY indications. HIPPI-PH does not require Sources to accept more than 63 READY indications, but HIPPI-SC implementations that can accept up to 255 READY indications without loss are desirable. The onset of the first lost READY indication can be delayed through various means, including but not limited to:

– a design that tolerates receiving a few short READY indications before dropping an output READY indication, or;
– using a flag bit or special states to indicate that the forwarded READY indications are behind and need to catch up, when able, for example, when receiving more than four contiguous CLOCK periods of READY asserted or READY deasserted, or;
– using a counter, counting up for each READY indication received, and counting down for each READY indication forwarded.

Copyright International Organization for Standardization
Reproduced by IHS under license with ISO
No reproduction or networking permitted without license from IHS Not for Resale

Bibliography

The following documents are the basis for assignment of specific logical addresses for certain network services:

[1] RFC 1042, *Standard for the transmission of IP datagrams over IEEE 802 networks*. (Provides the general techniques that the Internet Protocol uses to build media packet headers on ISO/IEC 8802 (IEEE 802) networks.)

[2] RFC 1374, *IP and ARP on HIPPI.* (Describes a technique whereby Internet Protocol equipped hosts using a HIPPI compliant interface may discover the media address of a destination host with a known IP address.)

[3] RFC 1112, *Host extensions for IP multicasting*. (Provides a technique whereby network and transport layer Internet protocol applications may use the multicasting capabilities defined for ISO/IEC 8802 networks.

[4] RFC 1131, *OSPF specification*. (Describes the open shortest path first IP protocol which permits network layer IP routers to discover the best route to remote IP addresses and networks.)

[5] ISO/IEC 9542:1988[1)], *Information processing systems – Telecommunications and information exchange between systems – End system to intermediate system routing exchange protocol for use in conjunction with the protocol for providing the connectionless-mode network service (ISO 8473)*

[6] ISO/IEC 10589:1992, *Telecommunications and information exchange between systems – Intermediate system to intermediate system intra-domain routing information exchange protocol for use in conjunction with the protocol for providing the connectionless-mode Network Service (ISO 8473)*

[7] ISO/IEC 15802-3:1998, *Information technology – Telecommunications and information exchange between systems – Local and metropolitan area networks – Common specifications – Part 3: Media Access Control (MAC) Bridges.* (Specifies the operation of transparent bridges between ISO/IEC 8802 conferment networks.)

The following publications also provide relevant information.

ISO/IEC 11518-3:1996, *Information technology – High-performance parallel interface – Part 3: Encapsulation of ISO/IEC 8802-2 (IEEE Std 802.2) Logical Link Control Protocol Data Units (HIPPI-LE)*

ISO/IEC 11518-9:1999, *Information technology – High-performance parallel interface – Part 9: Serial specification (HIPPI-Serial)*

———————

1) Currently under revision.

Copyright International Organization for Standardization
Reproduced by IHS under license with ISO
No reproduction or networking permitted without license from IHS Not for Resale

Copyright International Organization for Standardization
Reproduced by IHS under license with ISO
No reproduction or networking permitted without license from IHS
Not for Resale

Standards Survey

The IEC would like to offer you the best quality standards possible. To make sure that we continue to meet your needs, your feedback is essential. Would you please take a minute to answer the questions overleaf and fax them to us at +41 22 919 03 00 or mail them to the address below. Thank you!

Customer Service Centre (CSC)

International Electrotechnical Commission
3, rue de Varembé
1211 Genève 20
Switzerland

or

Fax to: **IEC**/CSC at +41 22 919 03 00

Thank you for your contribution to the standards-making process.

Nicht frankieren
Ne pas affranchir

Non affrancare
No stamp required

A Prioritaire

RÉPONSE PAYÉE

SUISSE

Customer Service Centre (CSC)
International Electrotechnical Commission
3, rue de Varembé
1211 GENEVA 20
Switzerland

--`,,`,,`-`-`,,`,,`,`,,`---

Copyright International Organization for Standardization
Reproduced by IHS under license with ISO
No reproduction or networking permitted without license from IHS

Not for Resale

Q1 Please report on **ONE STANDARD** and **ONE STANDARD ONLY**. Enter the exact number of the standard: *(e.g. 60601-1-1)*

.....

Q2 Please tell us in what capacity(ies) you bought the standard *(tick all that apply).* I am the/a:

- purchasing agent ❑
- librarian ❑
- researcher ❑
- design engineer ❑
- safety engineer ❑
- testing engineer ❑
- marketing specialist ❑
- other.....

Q3 I work for/in/as a: *(tick all that apply)*

- manufacturing ❑
- consultant ❑
- government ❑
- test/certification facility ❑
- public utility ❑
- education ❑
- military ❑
- other.....

Q4 This standard will be used for: *(tick all that apply)*

- general reference ❑
- product research ❑
- product design/development ❑
- specifications ❑
- tenders ❑
- quality assessment ❑
- certification ❑
- technical documentation ❑
- thesis ❑
- manufacturing ❑
- other.....

Q5 This standard meets my needs: *(tick one)*

- not at all ❑
- nearly ❑
- fairly well ❑
- exactly ❑

Q6 If you ticked NOT AT ALL in Question 5 the reason is: *(tick all that apply)*

- standard is out of date ❑
- standard is incomplete ❑
- standard is too academic ❑
- standard is too superficial ❑
- title is misleading ❑
- I made the wrong choice ❑
- other .....

Q7 Please assess the standard in the following categories, using the numbers:
(1) unacceptable,
(2) below average,
(3) average,
(4) above average,
(5) exceptional,
(6) not applicable

- timeliness.....
- quality of writing.....
- technical contents.....
- logic of arrangement of contents .....
- tables, charts, graphs, figures.....
- other .....

Q8 I read/use the: *(tick one)*

- French text only ❑
- English text only ❑
- both English and French texts ❑

Q9 Please share any comment on any aspect of the IEC that you would like us to know:

.....
.....
.....
.....
.....
.....
.....
.....
.....
.....
.....
.....

Copyright International Organization for Standardization
Reproduced by IHS under license with ISO
No reproduction or networking permitted without license from IHS

Not for Resale

--`,,`,,`-`-`,,`,,`,`,,`---

Copyright International Organization for Standardization
Reproduced by IHS under license with ISO
No reproduction or networking permitted without license from IHS

Not for Resale

ISBN 2-8318-5519-5



ICS 35.200

Typeset and printed by the IEC Central Office
GENEVA, SWITZERLAND

Copyright International Organization for Standardization
Reproduced by IHS under license with ISO
No reproduction or networking permitted without license from IHS

Not for Resale