TECHNICAL REPORT

ISO/IEC TR 15410

First edition
1998-12-15

Information technology — Telecommunications and information exchange between systems — PISN mobility-general principles and services aspects

Technologies de l'information — Télécommunications et échange d'information entre systèmes — Principes de mobilité générale du PISN et aspects de service

Reference number
ISO/IEC TR 15410:1998(E)

--`,,```,,,,````-`-`,,`,,`,`,,`---

Copyright International Organization for Standardization
Provided by IHS under license with ISO
No reproduction or networking permitted without license from IHS

Not for Resale

Contents

1 Scope 1

2 References 1

3 Terminology 2

3.1 Definitions 2

3.1.1 Internal definitions 2

3.1.2 External definitions 4

3.2 Symbols and abbreviations 4

4 Introduction 5

4.1 Private Integrated Services Network environment 5

4.2 PISN mobility concept 6

4.2.1 Private Personal Mobility (PPM) 8

4.2.2 Wireless Terminal Mobility (WTM) 8

4.2.3 Database architecture 8

4.3 Relation between PPM and WTM 8

4.3.1 Mobility seen as a dynamic linking of identities 8

4.3.2 Similarities of processes 9

4.3.3 Location Area 9

4.3.4 The use of PPM and WTM together 9

4.4 Mobility between calls and during an established call 9

4.5 Services to be supported 9

4.5.1 Bearer services and Teleservices 10

4.5.2 Supplementary Services 10

4.5.2.1 Access to supplementary services 10

4.5.2.2 Service options 11

© ISO/IEC 1998

All rights reserved. Unless otherwise specified, no part of this publication may be reproduced or utilized in any form or by any means, electronic or mechanical, including photocopying and microfilm, without permission in writing from the publisher.

ISO/IEC Copyright Office • Case postale 56 • CH-1211 Genève 20 • Switzerland

Printed in Switzerland

Copyright International Organization for Standardization
Provided by IHS under license with ISO
No reproduction or networking permitted without license from IHS Not for Resale

4.5.2.3 Dynamic registration and service related data 11
4.5.2.4 Destination PINX: Home PINX versus Visitor PINX 12
5 Private Personal Mobility 12
5.1 Introduction to PPM 12
5.2 PPM service architecture 12
5.3 PPM services 13
5.3.1 PPM registration for incoming calls (InCall registration) 13
5.3.2 PPM registration for outgoing calls (OutCall registration) 13
5.3.3 PPM registration for incoming and outgoing calls (AllCall registration) 14
5.3.4 Local and remote PPM registration 14
5.3.5 PPM de-registration 14
5.3.6 PPM service interrogation 15
5.4 Interaction considerations 15
5.4.1 Interaction with existing services 15
5.5 Security aspects 15
5.5.1 General requirements on security mechanisms 16
5.5.2 General risks 16
5.5.3 Requirement on security mechanisms 16
5.6 Signalling aspects 17
6 Wireless Terminal Mobility 17
6.1 Introduction to WTM 17
6.1.1 Reference configuration 18
6.1.2 General information on roaming 19
6.1.3 General information on handover 20
6.2 Feature description 21
6.2.1 Core features 21
6.2.1.1 Identification 21
6.2.1.1.1 Identification of fixed radio part 22
6.2.1.1.2 Identification of Wireless Terminal (WT) 22
6.2.2 Roaming 22
6.2.2.1.1 Location registration related procedures 23

Copyright International Organization for Standardization
Provided by IHS under license with ISO
No reproduction or networking permitted without license from IHS Not for Resale

6.2.2.1.2 Attachment related procedures 23
6.2.2.2 Handover 23
6.2.2.3 Authentication 24
6.2.2.3.1 Authentication of wireless terminal 24
6.2.2.3.2 Authentication of the fixed part 24
6.2.2.3.3 Mutual authentication 24
6.2.2.3.4 Proprietary authentication algorithms 24
6.2.3 Additional features 24
6.3 Services 24
6.3.1 Basic services 24
6.3.2 Supplementary services 25
6.3.3 PISN Attendant services 25
6.3.4 Radio specific supplementary services 25
6.4 Interaction considerations 26
6.4.1 Wireless systems 26
6.4.2 Interworking with existing services 26
6.5 Security aspects 26
6.5.1 Security related functions 26
6.5.1.1 Authentication of wireless terminal 26
6.5.1.2 Authentication of the fixed part 26
6.5.1.3 Mutual authentication 27
6.5.1.4 Proprietary authentication functions 27
6.5.2 Support for encryption functions over the radio interface 27
6.5.3 Functions to prevent unauthorised access 27
6.6 Signalling aspects 27
6.6.1 Signalling between the wireless terminals and the fixed radio parts 27
6.6.2 Signalling between PINXs 28
6.6.3 Signalling between public networks and PINX 28
6.7 Management, administration and operation 28
6.7.1 Configuration management 28
6.7.1.1 Configuration management of wireless terminals 28

Copyright International Organization for Standardization
Provided by IHS under license with ISO
No reproduction or networking permitted without license from IHS Not for Resale

6.7.1.1.1 Configuration procedure (on-air) 28
6.7.1.1.2 Exchange of configuration data (on-air) 28
6.7.1.1.3 Suspension/termination of access rights (on-air) 29
6.7.1.2 Management procedures for wireless terminals 29
6.7.1.2.1 Network identity 29
7 PPM on top of WTM 29
7.1 WTM 29
7.2 General aspects of providing PPM on top of WTM 30
7.3 Examples of PPM - WTM interactions 30
7.4 The concept of a "WT number" 31
7.5 Options for providing PPM on top of WTM 31
7.5.1 Basic options 31
7.5.1.1 Basic Option 1 32
7.5.1.2 Basic Option 2 33
7.5.1.3 Basic Option 3 35
7.5.2 Summary of discussion of the basic options 36
7.5.3 Extended options 37
7.5.3.1 Extended Option 1 37
7.5.3.2 Extended Option 2 37
7.5.3.3 Extended Option 3 37
7.6 Information flows and procedures for PPM using WTM terminals 37
7.6.1 Information flows for PPM registration 38
7.6.1.1 Basic Option 2 38
7.6.1.1.1 PPM registration 38
7.6.1.1.2 Automatic PPM re-registration 39
7.6.1.2 Extended Option 2 40
7.6.1.2.1 PPM registration 40
7.6.1.2.2 Automatic PPM re-registration 40
7.6.2 Procedures for incoming PPM calls 41
7.6.3 Procedures for outgoing PPM calls 42
7.6.4 Conclusion 42

Copyright International Organization for Standardization
Provided by IHS under license with ISO
No reproduction or networking permitted without license from IHS Not for Resale

8 Numbering, addressing and routeing 42
8.1 General principles 42
8.1.1 Addresses in non-ISDN telecommunication networks (not supporting mobility) 43
8.1.2 Access arrangement in public and private ISDNs 43
8.1.2.1 DDI 43
8.1.2.2 MSN 44
8.1.3 Addresses in PISNs supporting WTM 44
8.2 User and network operator requirements 46
8.3 WTM numbering and addressing 46
8.3.1 General 46
8.3.2 Contents of the number digits in the PISN NP 47
8.3.3 Structure of PISN NP 47
8.4 PPM numbering and addressing 47
8.5 Routeing 47
8.5.1 General principles 47
8.5.2 Data Bases 48
8.5.3 Example of routeing processes 48
8.5.3.1 Routeing of call-independent information 48
8.5.3.2 Routeing of calls and call-related information 48
9 Future standardisation 49

Copyright International Organization for Standardization
Provided by IHS under license with ISO
No reproduction or networking permitted without license from IHS Not for Resale

Foreword

ISO (the International Organization for Standardization) and IEC (the International Electrotechnical Commission) form the specialized system for worldwide standardization. National bodies that are members of ISO or IEC participate in the development of International Standards through technical committees established by the respective organization to deal with particular fields of technical activity. ISO and IEC technical committees collaborate in fields of mutual interest. Other international organizations, governmental and non-governmental, in liaison with ISO and IEC, also take part in the work.

In the field of information technology, ISO and IEC have established a joint technical committee, ISO/IEC JTC 1.

The main task of technical committees is to prepare International Standards, but in exceptional circumstances a technical committee may propose the publication of a Technical Report of one of the following types:

— type 1, when the required support cannot be obtained for the publication of an International Standard, despite repeated efforts;

— type 2, when the subject is still under technical development or where for any other reason there is the future but not immediate possibility of an agreement on an International Standard;

— type 3, when a technical committee has collected data of a different kind from that which is normally published as an International Standard (“state of the art”, for example).

Technical Reports of types 1 and 2 are subject to review within three years of publication, to decide whether they can be transformed into International Standards. Technical Reports of type 3 do not necessarily have to be reviewed until the data they provide are considered to be no longer valid or useful.

ISO/IEC TR 15410, which is a Technical Report of type 3, was prepared by Joint Technical Committee ISO/IEC JTC 1, *Information technology*, Subcommittee SC 6, *Telecommunications and information exchange between systems*.

Copyright International Organization for Standardization
Provided by IHS under license with ISO
No reproduction or networking permitted without license from IHS Not for Resale

Copyright International Organization for Standardization
Provided by IHS under license with ISO
No reproduction or networking permitted without license from IHS
Not for Resale

Information technology — Telecommunications and information exchange between systems — PISN mobility-general principles and services aspects

1 Scope

This Technical Report (TR) analyses the requirements for the standardization of networking functions to support mobility within one or more Private Integrated Network Exchanges (PINXs) of a Private Integrated Services Network (PISN).It covers both Wireless Terminal Mobility (WTM) and Private Personal Mobility (PPM).

WTM is a function that allows users of Wireless Terminals (WT) to make and receive calls at any compatible radio access within the network. Standards for WTM should be independent of the access technology used to support the WTs.

PPM enables users of a PISN to register at any suitable terminal (wired or wireless) within the network for the making and/or receiving of calls.

This Technical Report covers the following subjects for both WTM and PPM:

- Registration procedures;
- Procedures for incoming and outgoing calls;
- Access security procedures (identification and authentication);
- Requirements for numbering, addressing and signalling;
- Requirements for management, administration and operation.

2 References

ISO/IEC 11571:1994, *Information technology — Telecommunications and information exchange between systems — Numbering and sub-addressing in private integrated services networks.*

ISO/IEC 11572:1994, *Information technology — Telecommunications and information exchange between systems — Private Integrated Services Network — Circuit mode bearer services — Inter-exchange signalling procedures and protocol.*

ISO/IEC 11574:1994, *Information technology — Telecommunications and information exchange between systems — Private Integrated Services Network — Circuit mode 64 kbit/s bearer services — Service description, functional capabilities and information flows.*

--`,,```,,,,````-`-`,,`,,`,`,,`---
Copyright International Organization for Standardization
Provided by IHS under license with ISO
No reproduction or networking permitted without license from IHS
Not for Resale

ISO/IEC 11579-1:1994, *Information technology — Telecommunications and information exchange between systems — Private Integrated Services Network — Part 1: Reference configuration for PISN Exchanges (PINX).*

ISO/IEC 11582:1995, *Information technology — Telecommunications and information exchange between systems — Private Integrated Services Network — Generic functional protocol for the support of supplementary services — Inter-exchange signalling procedures and protocol.*

CCITT Rec. E.164 (1988), *Numbering plan for the ISDN era.*

CCITT Rec. I.251.1 (rev.1) (1992), *Integrated Services Digital Network (ISDN) — General structure and service capabilities — Direct Dialling In.*

CCITT Rec. I.251.2 (rev.1) (1992), *Integrated Services Digital Network (ISDN) — General structure and service capabilities — Multiple subscriber number.*

CCITT Rec. Q.81.1 (1988), *Functions and information flows for services in the ISDN — Stage 2 description for number identification supplementary services — Section 1 - Direct-Dialling-In.*

CCITT Rec. Q.81.2 (1992), *Functions and information flows for services in the ISDN — Stage 2 description for number identification supplementary services — Section 2 - Multiple subscriber number.*

ITU-T Rec. I.112:1993, *Integrated services (ISDN) — General structure: Vocabulary of terms for ISDNs.*

ITU-T Rec. Q.931 (1993), *Digital subscriber signalling system No.1 Network layer — Digital subscriber signalling system No.1 (DSS 1) — ISDN User-Network interface layer 3 — Specification for basic call control.*

3 Terminology

3.1 Definitions

For the purposes of this Technical Report, the following definitions apply. The sources of the definitions are given in square brackets.

3.1.1 Internal definitions

1 Attendant
a PISN user whose prime task is to provide assistance and support to the users.

2 Authentication
a property by which the correct identity of an entity or party is established with a required assurance.

3 Wireless Terminal (WT)
a physical entity that provides access to the telecommunications services of a PISN via a radio interface.

4 Wireless Terminal Mobility (WTM)
the ability of a wireless terminal to be in continuous motion whilst accessing and using the telecommunication services offered by the PISN, as well as the capability of the network to keep track of the location of the wireless terminal within the coverage area of the radio system used.

5 Coverage area
The area over which reliable communication can be established and maintained.

6 Fixed Part
a physical grouping of some or all of the fixed component parts of a mobile radio system. These would include one or more pieces of radio equipment attached to an antenna system. It could also include common control functions and interfaces to the PINX.

Copyright International Organization for Standardization
Provided by IHS under license with ISO
No reproduction or networking permitted without license from IHS Not for Resale

7 Function
a set of processes defined for the purpose of achieving a specified objective.

8 Handover
the process of switching a call in progress from one physical channel to another physical channel. These processes can be internal or external with respect to a RE/RBS.

NOTE — Only the external handover, i.e. the handover between two different RE/RBSs, is relevant for this Technical Report.

9 Home Data Base (HDB)
the data base in which the current location and all associated parameters of a wireless terminal or a user are stored.

10 Location Area (LA)
the coverage area in which a wireless terminal may receive and initiate calls as a result of a single location registration.

11 Location Registration
the process whereby the position of a wireless terminal is made known to the PISN.

12 Private
an attribute indicating that the application of the so qualified item, e.g. a network, a unit of equipment, a service, is offered to or is in the interest of a determined set of users.

NOTE The term does not include legal or regulatory aspects, nor does it indicate any aspects of ownership.

13 Private Personal Mobility (PPM)
the capability of a PISN user to register at any PISN terminal, and so receive the PISN services at the hosting terminal.

14 Public
an attribute indicating that the application of the so qualified item, e.g. a network, a unit of equipment, a service, is offered to the general public.

NOTE — The term does not include legal or regulatory aspects, nor does it indicate any aspects of ownership.

15 PPM Number
a number which uniquely identifies a PPM user. This is the number used by the caller to reach the PPM user.

16 PPM Registration
the operation performed by a PPM user to inform the PISN of the PISN address that should be utsed to locate the user.

17 Radio Base Station (RBS)
a physical grouping that contains all of the radio equipment on the PISN side of the air interface directly connected to a single antennae system.

18 Radio Exchange (RE)
a physical grouping between the RBSs and the PINX .

19 Registration
a term that should be used with a qualifier, e.g. location registration or dynamic registration.

20 Roaming
the movement between calls of a wireless terminal from one Fixed Radio Part (RE/RBS) coverage area to another RE/RBS coverage area, where the capabilities of the PISN enable the wireless terminal to access PISN services.

NOTE Roaming requires the RE/RBS and the wireless terminals to be interoperable.

NOTE See also the definition of handover.

--`,,```,,,,````-`-`,,`,,`,`,,`---

Copyright International Organization for Standardization
Provided by IHS under license with ISO
No reproduction or networking permitted without license from IHS Not for Resale

21 PISN Network Supervisor (SUP)
the entity which is allowed to execute a PISN management task.

22 Visitor Data Base (VDB)
the database in which all relevant parameters concerning a wireless terminal and a PPM user are stored for aslong as they are located in an area controlled by this database.

3.1.2 External definitions

1 Address [ISO/IEC 11571]
2 Additional Network Feature (ANF) [ISO/IEC 11571]
3 Call, Basic call [ISO/IEC 11571]
4 Dialling Plan [ISO/IEC 11571]
5 Domain [ISO/IEC 11571]
7 Identification Address/Number [ISO/IEC 11571]
8 Implicit Numbering Plan [ISO/IEC 11571]
9 Integrated Services Digital Network (ISDN) [ISO/IEC 11571]
10 ISDN Numbering Plan (ISDN NP) [ISO/IEC 11571]
11 Multiple Subscriber Number (MSN) [ISO/IEC 11571]
12 Native Numbering Plan [ISO/IEC 11571]
13 Number [ISO/IEC 11571]
14 Numbering Plan Identifier (NPI) [ISO/IEC 11571]
15 Partial Number [ISO/IEC 11571]
16 PISN Administrator [ISO/IEC 11571]
17 Private Numbering Plan (PNP) [ISO/IEC 11571]
18 PNP Number [ISO/IEC 11571]
19 Private Integrated Services Network (PISN) [ISO/IEC 11579-1]
20 Private Integrated Services Network eXchange (PINX) [ISO/IEC 11579-1]
21 Private Integrated Services Network Numbering Plans (PISN NP) [ISO/IEC 11571]
22 PISN Number [ISO/IEC 11571]
23 PISN User [ISO/IEC 11574]
24 Region [ISO/IEC 11571]
25 Selection Address/Number [ISO/IEC 11571]
26 Sub-domain [ISO/IEC 11571]
27 Telecommunication Network [ITU-T Rec. I.112]
28 Terminal equipment; terminal [ISO/IEC 11571]
29 Type of Number (TON) [ISO/IEC 11571]
30 Unknown Numbering Plan (Unknown NP) [ISO/IEC 11571]

3.2 Symbols and abbreviations

ANF	Additional Network Feature
CC	Call Completion
CFU	Call Forwarding Unconditionaly
CD	Call Diversion
DDI	Direct Dialling In
DWT	Dedicated Wireless Terminal
DN	Dialling Number
HDB	Home Data Base
ISDN	Integrated Services Digital Network
ISDN NP	ISDN Numbering Plan
IEC	International Electrotechnical Commission

Copyright International Organization for Standardization
Provided by IHS under license with ISO
No reproduction or networking permitted without license from IHS Not for Resale

ISO	International Standardisation Organisation
LA	Location Area
MSN	Multiple Subscriber Number
NP	Numbering Plan
NPI	Numbering Plan Identifier
PIN	Personal Identification Number
PNP	Private Numbering Plan
PISN	Private Integrated Services Network
PISN NP	Private Integrated Services Network Numbering Plans
PINX	Private Integrated Network eXchange
PPM	Private Personal Mobility
RBS	Radio Base Station
PSS1	Private Signalling System #1
RE	Radio Exchange
SUP	PISN Network Supervisor
TE	ISDN Terminal Equipment
TON	Type of Number
TR	Technical Report
VA	Visitor Area
VDB	Visitor Data Base
WNT	Wireless Network Terminator
WT	Wireless Terminal
WTI	Wireless Terminal Identity
WTM	Wireless Terminal Mobility

4 Introduction

This clause provides some background and gives an overview of the concepts covered in this Technical Report by describing the basic structure of a PISN and explaining the key areas related to mobile users and terminals.

4.1 Private Integrated Services Network environment

As seen in this Technical Report, the telecommunications environment of a PISN consists of PINXs radio exchanges (RE), radio base stations (RBS), wired terminals, wireless terminals and users of these terminals. See Figure 1 for an illustration.

--`,,```,,,,````-`-`,,`,,`,`,,`---

Copyright International Organization for Standardization
Provided by IHS under license with ISO
No reproduction or networking permitted without license from IHS Not for Resale

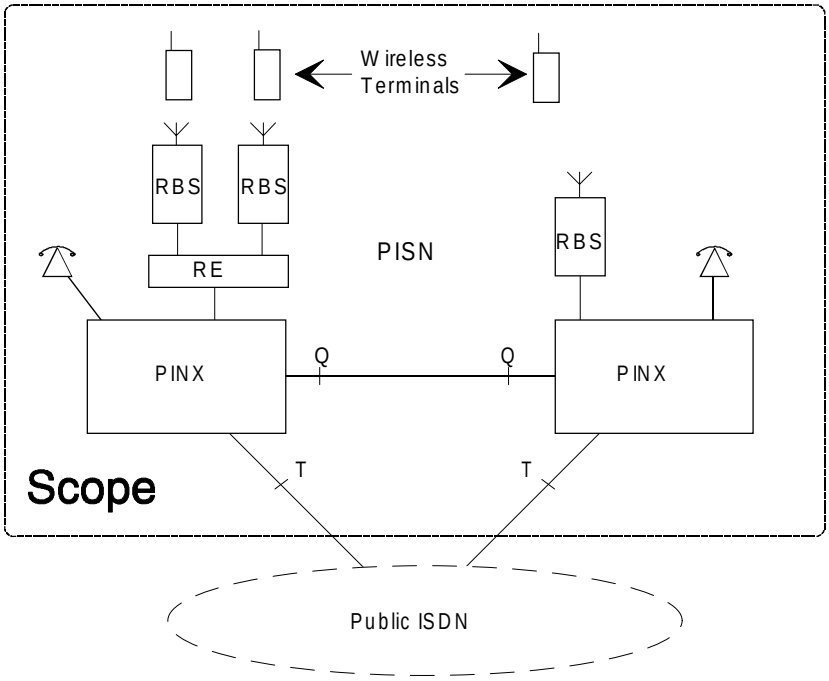

Figure 1 — Example of a PISN environment

4.2 PISN mobility concept

As the PINX itself is not mobile, mobility with respect to the access side of the PINX can apply to the terminal, to the user of the terminal, or to both. This means that the relationship can be dynamic either between the access point and the terminal, or between the terminal and the user. See Figure 2 for an illustration.

Copyright International Organization for Standardization
Provided by IHS under license with ISO
No reproduction or networking permitted without license from IHS
Not for Resale

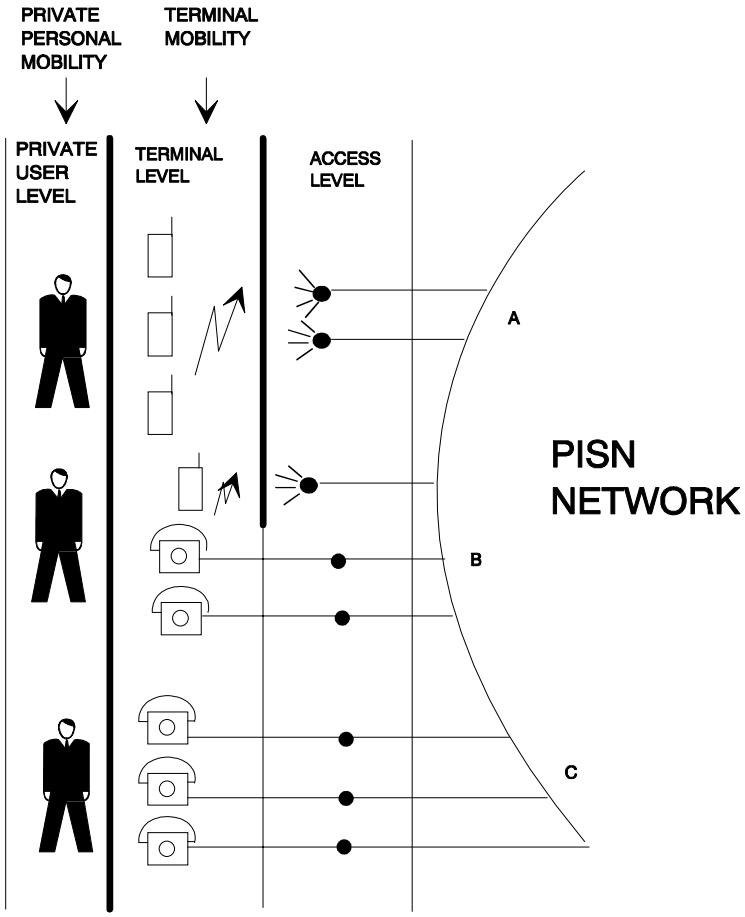

Figure 2 — PISN mobility

WTM is applicable only to wireless terminals whilst PPM is applicable both to wired and wireless terminals, as well as to a mixed environment utilising both terminal types.

Three different levels are identified in order to describe a PISN mobility model for this study:

- access level;
- terminal level;
- user level.

Two mobility concepts are identified and generally described in this subclause. The two concepts are at this stage considered to be independent. This means that one of the concepts may be standardised/implemented without the other. The concepts are called Private Personal Mobility (PPM) and Wireless Terminal Mobility (WTM) and are briefly described below.

In this report mobility for users and terminals is limited to a single PISN. Referring to Figure 1, the mobility of a user/terminal is either within or between the PINXes. Mobility between two or more PISNs is outside the scope of this Technical Report.

Copyright International Organization for Standardization
Provided by IHS under license with ISO
No reproduction or networking permitted without license from IHS
Not for Resale

4.2.1 Private Personal Mobility (PPM)

With PPM, the static relationship between the user and the terminal providing his telecommunications services is abandoned.

In PPM it is possible for the user to change terminal, wired or wireless, between calls while retaining his telecommunications services.

The intent of PPM is to associate services with users and not terminals. However, the services provided may be limited by the capabilities of the particular terminal at which the user registers.

The update of the users location shall be performed or initiated by the user. This can be done by the user manually (e.g. a key sequence), but, if the terminal permits, it can also be accomplished through more advanced and automatic means (e.g. use of smart cards).

4.2.2 Wireless Terminal Mobility (WTM)

With WTM, there is no fixed relation between the wireless terminal and the PISN access and the terminal can also change access points as it is moving. This can occur between calls or during an established call.

Wherever possible, services should be provided to a wireless terminal in the same way as to a wired terminal. However, some existing services may need modification and new services may be required. From the users point of view, the same level of service quality is desired from wireless terminals as from wired terminals.

Location information concerning the wireless terminal may be available in the network and used for call handling (e.g. routeing, charging, etc.). This location information may be updated automatically by the wireless terminal or manually by the user of the wireless terminal.

4.2.3 Database architecture

An architecture based on the Home Data Base/Visitor Data Base (HDB/VDB) concept has been assumed for mobility management in this Technical Report. This architecture is considered mature for mobile telecommunication applications. Furthermore the introduction of mobility based upon this approach is considered to minimise the impact on the current standards applicable to PISNs.

One consequence of the choice of the HDB/VDB concept is that the practical application of mobility with multiple HDBs in a PISN which allows a user to permanently change his location without changing his number (free numbering), is not covered in this Technical Report.

The interface between the PINX and the databases HDB/VDB is out of the scope of this Technical Report.

4.3 Relation between PPM and WTM

4.3.1 Mobility seen as a dynamic linking of identities

PPM gives the user freedom to use any terminal in the PISN whilst WTM allows a WT to be used at any compatible PISN radio access.

Each form of mobility requires a dynamic linking of two identities. PPM requires a dynamic linking between the PPM number and the terminal (access address in the case of a wired terminal). WTM requires a dynamic linking between the WT address and a PISN access address.

To the extent that each of these dynamic linkings are similar - in each of them one identity represents the mobile entity and the other identity represents its "location" - it should be possible to use the same addressing and routeing principles for both PPM and WTM.

--`,,```,,,,````-`-`,,`,,`,`,,`---
Copyright International Organization for Standardization
Provided by IHS under license with ISO
No reproduction or networking permitted without license from IHS Not for Resale

It should then be possible to use the same HDB and VDB concept for both PPM and WTM, though different data structures may be required for the two forms of mobility.

There is no intention to standardise an interface between the PINX and the databases (HDB/VDB).

4.3.2 Similarities of processes

The following procedures should be defined as generic as possible for both PPM and WTM:

- Registration;
- Authentication;
- Handling of incoming calls to the mobile user;
- Handling of outgoing calls from the mobile user.

This would minimise the differences between the procedures for PPM and WTM while allowing the specific characteristics of each to be taken into account.

a) WTM

- Terminals can perform actions automatically.

b) PPM

- The PPM concept involves actions to be performed by the users. These procedures differ from the terminal procedures in that they have to be adapted to human actions.

4.3.3 Location Area

This report uses the term Location Area (LA) only in relation with WTM and not for the PPM case.

4.3.4 The use of PPM and WTM together

WTM is independent of PPM in the sense that WTM and PPM together allow mobility of the terminal while maintaining the PPM user's registration on the terminal. This is likely to require a complex procedure which the service standards must accomodate. The details are discussed further in chapter 7, «PPM on top of WTM».

4.4 Mobility between calls and during an established call

Two fundamental situations should be covered when discussing mobility;

- the ability to change access (WTM) or terminal (PPM) between calls, and
- the ability to change access (WTM) during an established call.

4.5 Services to be supported

When mobility is introduced, it is desirable that a full range of basic and supplementary services is made available to mobile users with the same quality of service as would be expected by fixed users. The operation of some existing supplementary services may need to be modified if they are to be available to mobile users.

Copyright International Organization for Standardization
Provided by IHS under license with ISO
No reproduction or networking permitted without license from IHS Not for Resale

4.5.1 Bearer services and Teleservices

Standards for mobility in the private network should be capable of supporting all circuit mode basic services as defined in ISO/IEC 11574.

4.5.2 Supplementary Services

All supplementary services defined for PISNs should be considered and made applicable if this can be done without undue difficulty. In addition the following mobility specific supplementary services and Additional Network Features (ANFs) should be standardized.

- WTM Location registration;
- WTM incoming call handling;
- WTM outgoing call handling;
- WTM authentication of the terminal by the network;
- WTM authentication of the network by the terminal;
- WTM Handover
- PPM registration;
- PPM incoming call handling;
- PPM outgoing call handling.

4.5.2.1 Access to supplementary services

The provision of standardised supplementary services where one or more of the involved users are either a WTM or PPM user can present a number of problems in implementation.

One of the most obvious problems likely to be encountered by mobile users as they roam from one PINX to another is the difference in supplementary service access methods implemented by the various manufacturers.

Careful network planning and management can, in many cases, be used to provide unified user procedures throughout the network but this is likely to be more difficult where:

a) mobility is introduced to an established PISN of fixed users as the co-ordination of user procedures is of considerably less importance when all user terminals are static. Also, there may be some resistance to change among the existing users;

b) some terminals or PINXs within the network implement fixed user procedures set by the manufacturer and are not available for customisation;

c) not all PINXs in a PISN have implemented the same set of supplementary services:

The rationalisation of user procedures is, however, a difficult problem to deal with. While complying with the Private Signalling System #1 (PSS1) standards for supplementary service signalling between PINXs, each manufacturer is likely to offer access to the services in slightly different ways because:

--`,,```,,,,````-`-`,,`,,`,`,,`---
Copyright International Organization for Standardization
Provided by IHS under license with ISO
No reproduction or networking permitted without license from IHS Not for Resale

a) firstly, there are three generic procedures for network access protocols (i.e., the protocol between network and terminal equipment): functional procedures, the keypad stimulus protocol and the feature key management stimulus protocol and;

b) secondly, even if the same generic method is used, there is still scope for differences, since in the stimulus protocol case no specific procedures are standardised for individual supplementary services, and standardised functional procedures are so far defined for public Integrated Services Digital Network (ISDN) terminals only and for very few services.

This could cause confusion to roaming users as they try to invoke supplementary services at different points within the PISN.

One way to overcome this problem is to create a homogeneous environment for roaming users, e.g., by ensuring that all PINXs supporting PPM or WTM in a network, all fixed radio equipemt and all WTs are of the same type and from a single manufacturer (in many instances this will not be considered as a practical or feasible solution), or by specifing standards for the access procedures (which is a long term goal rather than a practical alternative for the near future).

Another option is to ensure that the user's Home PINX is always accessed to provide supplementary services (i.e., always route incoming and outgoing calls via the Home PINX). For many services this would be quite acceptable and a very practical solution but for others, the processintg, signalling and transmission overheads necessary for maintaining user status at the Home PINX would be intolerable.

A further option is to make use of the functional protocols defined for public ISDN. The WTs and radio fixed parts would need to be upgraded whenever the functional protocols for a new service are published. The cost of keeping these up-to-date could be unacceptably high unless or until a method of downloadintg a WT on-line can be devised.

4.5.2.2 Service options

PISN standards specify in many cases the mandatory core of a supplementary service and optional features, which an implementation may support in addition to the basic core. A manufacturer may provide further proprietary enhancement of the supplementary service. For instance, the core of Call Forwarding Unconditional (CFU) is that all calls or calls associated with a specific basic service are diverted to another PISN address. Standard options are the provision of notifications, interrogation procedures, etc. A manufacturer may further offer the non-standardised possibility to specify different diverted-to numbers based on certain call criteria, e.g., external versus internal calls, while still complying with the basic core of CFU.

The consistent provision of standard and proprietary service options for roaming users faces similar difficulties as discussed in 4.5.2.1. Invoking the supplementary service at the Home PINX regardless of the user's actual location again seems a good solution in some cases.

4.5.2.3 Dynamic registration and service related data.

Some existing supplementary services allow the served user to register data that are then used in the invocation of the service. An example is the Diverted-to user's address in the Call Diversion (CD) services. Once registered, this information must continue to be associated with the mobile user regardless of the user's movements within the PISN.

Other supplementary services rely on data stored in association with a specific service invocation, which also must "follow" the roaming user when changing location. An example is the queue of outstanding call completion requests.

In both cases this may prove to be difficult in a multi-vendor envitonment where such data may be stored and processed in quite different ways. There seems to be no simple solution to this problem other than imposing constraints on the use of such services for mobile users.

--`,,```,,,,````-`-`,,`,,`,`,,`---

Copyright International Organization for Standardization
Provided by IHS under license with ISO
No reproduction or networking permitted without license from IHS Not for Resale

4.5.2.4 Destination PINX: Home PINX versus Visitor PINX

Many supplementary services require actions from the destination PINX of a call. In the case of roaming users it is not so obvious what should be regarded the destination PINX, since the roaming user «exists» twice in the PISN. In a logical sense it would be the Home PINX as it holds the user's permanent «image». From a call termination point of view it would be the Visitor PINX as this is the user's current physical location. The determination of which interpretation is more suitable must be made on a case-by-case basis.

If the Visitor PINX is chosen, the following considerations are worthy of note in almost all cases:

a) the service may not be available to a served user at all locations;

b) the options subscribed to by the served user may not be offered at all Visitor PINXs:

c) user procedures may differ from PINX to PINX.

5 Private Personal Mobility

5.1 Introduction to PPM

Private Personal Mobility (PPM) provides PISN users with telecommunication services irrespective of the terminal used within the PISN. It enables each PISN user subscribing to the PPM service to participate in a user-defined set of services and to initiate and receive calls on the basis of a unique, personal PPM number throughout the PISN at any terminal, wired or wireless, irrespective of geographic location. PPM should only be limited by terminal and network capabilities and the restrictions imposed by the PISN. A PISN user subscribing to the PPM service is referred to as a PPM user.

In a PISN supporting PPM there exists no permanent association between PPM users and terminals. Any PPM user can register on any terminal within the PISN, and it is thus possible to have multiple registrations on a given terminal. It is also possible to have no user registered on a specific terminal.

5.2 PPM service architecture

Mobility services, as descibed in this report, assume the concepts of Home Data Base (HDB) and Visitor Data Base (VDB). The HDB contains the current location and all associated parameters of the PPM user, and is accessible from the PPM user's Home PINX. The VDB contains the information required for providing the PPM user with PISN services in the visitor area, and is accessible from the PPM user's Visitor PINX. No specifications are given regarding the physical implementation of these data bases or their geographical location relative to the PINXs.

In order for the PPM users to receive a consistent set of PISN services throughout the PISN, the necessary elements of the user's service profile should be made available at the Visitor PINX.

Figure 3 illustrates the PPM concept in terms of Home/Visitor PINX/Database. It describes the state of the PISN after the PPM user has registered at the Visitor PINX. The PISN has modified the PPM user's entry in the HDB which now points to the Visitor PINX. Also, a VDB entry has been established which supports the PPM user's access to PISN services at the Visitor PINX. The entry in the HDB should point to the VDB which has to contain the current access number. (Alternatively, the HDB could specify the PPM user's current access number.)

Copyright International Organization for Standardization
Provided by IHS under license with ISO
No reproduction or networking permitted without license from IHS Not for Resale

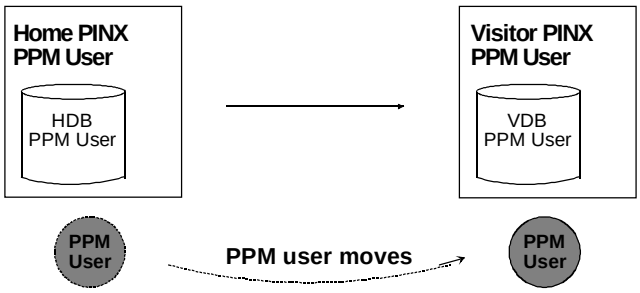

Figure 3 — Illustration of PPM

In a PISN which supports both WTM and PPM, interactions arise between the two types of mobility. This is a consequence of the requirement that PPM users must be allowed to register also on wireless terminals. Chapter 7 of this Technical Report deals with the problem of providing PPM on top of WTM.

5.3 PPM services

5.3.1 PPM registration for incoming calls (InCall registration)

The PISN should provide the PPM user with the possibility to specify one or more terminals at which calls to the PPM user are to be presented. Different terminals may be specified depending on:

- the type of teleservice;
- the type of bearer service.

For each teleservice and bearer service, only one terminal may be specified by a PPM user for incoming calls at any given time.

The PPM user should be allowed to specify, at registration time, the duration of the registration period (registration session) for incoming calls.

A PISN may allow several PPM users to register for incoming calls at the same terminal. Since an incoming call to a terminal which hosts more than one user could be for any one of the registered users, it may be desirable to specify the addressed user upon call delivery by means of a display feature, a distinctive ringing signal, or a voice announcement.

5.3.2 PPM registration for outgoing calls (OutCall registration)

A PPM user should be able to specify a terminal from which outgoing calls are to be made by the PPM user subject to their service profile. The PISN must support registration for:

- a single call;

and may also support registration sessions for:

- a specified duration;
- indefinite duration.

It may also be desirable to support PPM registration sessions for a specified number of outgoing calls.

Copyright International Organization for Standardization
Provided by IHS under license with ISO
No reproduction or networking permitted without license from IHS Not for Resale

Different terminals may be specified depending on:

- the type of teleservice;
- the type of bearer service.

For each teleservice and bearer service, a PPM user may be allowed to have, at any given time, more than one OutCall registration session in the PISN.

In a PISN which supports OutCall registration sessions, the question arises about whether or not more than one PISN user can be registered at the same terminal at the same time. If only one PISN user can be registered at any given time, all calls made from the terminal are assumed to be those of that user.

If multiple concurrent OutCall registrations are supported, a mechanism must be implemented to ensure that the PISN is aware of the calling user's identity. This may be accomplished by means of one of the following methods:

a) Before initiating an outgoing call, both the normal user and the PPM user dial a Personal Identification Number (PIN).

b) Only the PPM user dials a PIN before initiating an outgoing call. All other calls made from that terminal are assumed to be those of the normal user.

c) Only the normal user dials a PIN before initiating an outgoing call. All other calls made from that terminal are assumed to be those of the PPM user.

The PPM standards should allow any one of these methods to be implemented.

5.3.3 PPM registration for incoming and outgoing calls (AllCall registration)

A PPM user should be able to specify a terminal at which to receive incoming calls and also make outgoing calls. It should be possible to register for both these PPM service options by means of a single operation, referred to as AllCall registration. In an AllCall registration session, the incoming and outgoing call registration components are combined into a single service option, and cannot be separated.

5.3.4 Local and remote PPM registration

A PPM user should be able to register, from any suitable PISN terminal, to receive a PPM service at the hosting terminal. A PPM registration which is initiated from the hosting terminal is referred to as a local PPM registration. A PPM registration which is initiated from a PISN terminal other than the hosting terminal is referred to as a remote PPM registration.

Except for the specification of the hosting terminal in remote registration, the same basic procedures should be used for both types of registration.

5.3.5 PPM de-registration

A PISN supporting PPM should provide for the following PPM de-registration mechanisms:

Copyright International Organization for Standardization
Provided by IHS under license with ISO
No reproduction or networking permitted without license from IHS Not for Resale

- **Explicit de-registration:** A PPM user de-registers from the hosting terminal by means of a manual operation carried out on the same terminal (local de-registration) or on any other PISN terminal (remote de-registration).
- **Implicit de-registration:** A PPM user registers at another PISN terminal, which may cause the PISN to delete the previous registration for the relevant PPM service option(s).
- **Conditional de-registration:** The PISN de-registers a PPM user when certain pre-defined criteria are met (e.g. the registration timer expires, or the specified number of outgoing calls have been made).
- **Forced de-registration:** An authorised third party (e.g. the owner of the hosting terminal) de-registers the visiting PPM user(s) from a terminal. The terminal from which the forced de-registration request is initiated may be the hosting terminal (local de-registration) or any other PISN terminal (remote de-registration).

NOTE De-registration by the PISN management authority is outside the scope of this Technical Report.

During a period when a PPM user is not registered at any terminal, a default terminal may be assigned to the relevant PPM number for incoming and/or outgoing calls. Alternatively, incoming PPM calls may receive special treatment (e.g. voice announcement). These provisions will be subject to arrangement with the PISN management authority.

5.3.6 PPM service interrogation

The PISN should support interrogation procedures which the PPM user may invoke to inquire about the current status of PPM service options. For example, it should be possible for a PPM user to obtain information regarding the current parameters of an active OutCall session, including, for example, the number of remaining outgoing calls.

5.4 Interaction considerations

5.4.1 Interaction with existing services

The PPM service is intended to give the PPM user access to the telecommunication services as indicated by the user's service profile. The transfer of the service profile content between the Home PINX and the Visitor PINX should provide the basis to achieve this service. However, some services may be too complex to be provided in the new area if they have been activated in the Home Area, e.g., Call Completion (CC). For this kind of service the implementation may cancel the activated feature when the user is registered some where else.

5.5 Security aspects

Security aspects include the protection against malicious and unauthorized actions, the protection of the privacy and the freedom of action of PPM and non-PPM users of the PISN.

Various forms of misuse that a PISN, PISN users, and more specifically PPM users may be exposed to due to the PPM service should be further analysed and security mechanisms to be used to protect the PISN and the users against the different kinds of misuse should be developed.

NOTE This paragraph does not apply to legal requirements to send user identities for regulatory requirements (e.g., emergency calls).

Copyright International Organization for Standardization
Provided by IHS under license with ISO
No reproduction or networking permitted without license from IHS Not for Resale

The following paragraphs give only an overview of the subject.

5.5.1 General requirements on security mechanisms

PPM is a PISN service that enables PPM users to access telecommunication services at any terminal of the PISN. PPM users can make and receive calls on the basis of their personal PPM number. PPM users may, in principle, use any terminal in the PISN for making or receiving calls that will be charged to their account.

Due to the flexible nature of the PPM service, PPM users are very exposed to fraudulent use of their "subscription". An intruder or malicious person could abuse a PPM user's account from any terminal in the PISN. Therefore, it is important to protect the PISN, and PISN users and especially PPM users from any fraudulent or malicious attack and to preserve their privacy.

PPM security mechanisms should handle only those problems that are specifically related to the PPM service and those which exist normally in PISNs but become more significant in a PPM environment.

5.5.2 General risks

The following list includes those threats with realistic likelihood of occurrence. In addition, only threats that are specific to PPM are considered. Moreover, the protection of the PISN resources (PINX, Data Bases) against unauthorized access is not considered to be specific to PPM.

- Eavesdropping of PPM user's identification and authentication information (threat);
- Masquerading as a PPM user (threat, privacy violation);
- Registration unauthorized by the terminal's owner (inconvenience);
- Impersonating a registered PPM user and make outgoing calls (threat);
- Insecure PPM incoming calls answer (privacy violation);
- Unwanted incoming calls (inconvenience).

5.5.3 Requirement on security mechanisms

The analysis of the PPM related risks, shows that only those risks that can be considered as threat need to be dealt with. Mechanisms to deal with the others can be optionally provided.

Therefore, it is recommended that the following security aspects are considered in the PPM service as a minimum:

Copyright International Organization for Standardization
Provided by IHS under license with ISO
No reproduction or networking permitted without license from IHS Not for Resale

- to use an alternative identifier, not the PPM user's number, as the PPM user's identity;
- to use a one pass authentication mechanism with simple PIN;
- to provide a procedure to modify the PIN dynamically by the PPM user;
- to block the PPM account after a number of consecutive unsuccessful authentication attempts;
- unblocking the PPM account would be a management operation; it may also be a user procedure with a special PIN but no standardization is foreseen for such a procedure;
- to provide all users with the capability of preventing PPM users registering at their terminal.

5.6 Signalling aspects

The signalling system to be used between the PINXs should be based on PSS1, It is, however, expected that some enhancements of the PSS1 may be required.

6 Wireless Terminal Mobility

6.1 Introduction to WTM

WTM provides a PISN user with a wireless terminal the capability to access telecommunications services regardless of its geographical location by abandoning the "normal" fixed relation between the terminal and its physical connection to the network. Because of the mobile nature of a WT it will continuously change its PISN access point. This may happen during and between calls. In order for a PISN to support telecommunication services for continuously mobile WTs, the PISN (including the fixed radio parts) provides automatic functions which keep track of the WT's present and previous location as well as securing the communication with the terminal. WTM should only be limited by terminal and network capabilities and the restrictions imposed by the PISN. A PISN user using the WTM services is referred to as a WTM user in this Technical Report.

NOTE This Technical Report does not deal with any radio technical aspects. For information on such subjects, references should be made to the relevant standards for the applicable wireless systems.

WTM is not to be considered as a single function, but more as a "collection" of all new and modified functions and procedures required to support mobility of wireless terminals. In this Technical Report these functions have been gathered into two main groups which are:

- roaming; and
- handover.

This Clause describes the functions required to support mobility of WTs within a single PISN.

Copyright International Organization for Standardization
Provided by IHS under license with ISO
No reproduction or networking permitted without license from IHS Not for Resale

The main issues addressed are:

- identification of the mobility support procedures;
- location of the mobility support procedures;
- the information flow between the fixed radio part and the PINX ; and
- the information flow between the PINXs.

Subclause 6.2 covers these aspects in more detail.

NOTE The WTM functions described are based on the perceived user requirements for WTM and are equally applicable to any air interface used for the wireless access. It should be recognised that some forms of wireless access may not support all the services and procedures identified in this Technical Report. However such limitations, where they do exist, do not invalidate the principles of this Technical Report.

6.1.1 Reference configuration

Figure 4 indicates a possible reference configuration for a PISN with WTM.

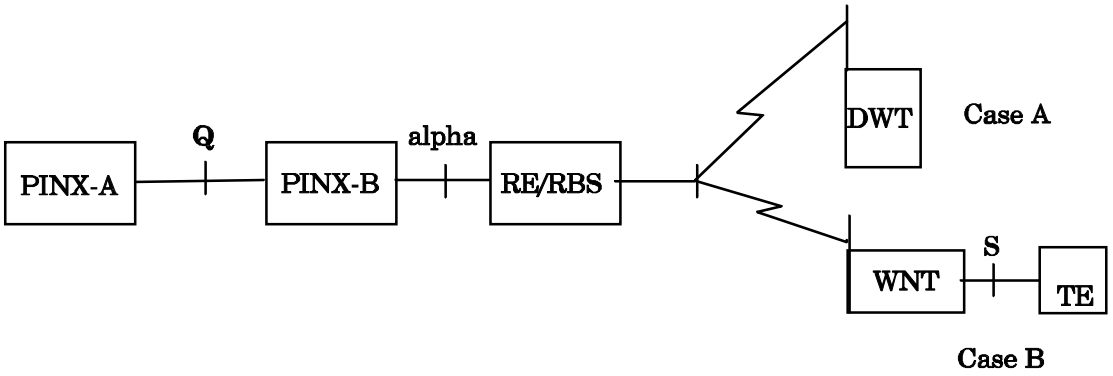

Legend:

- DWT means Dedicated Wireless Terminal;
- WNT means Wireless Network Terminator;
- TE is an ISDN terminal.

Figure 4 — Reference configuration for WTM

Copyright International Organization for Standardization
Provided by IHS under license with ISO
No reproduction or networking permitted without license from IHS Not for Resale

The reference configuration shows two cases:

- **Case A:**

  The wireless telephone systems acts as a terminal end system. A dedicated wireless terminal is used.

- **Case B:**

  The wireless telephone system acts as an intermediate system. The Wireless Network Terminator (WNT) provides a standardised wired interface to which a standardised ISDN terminal can be connected.

The reference configuration is not complete ,however, the following functional properties and limitations are recommended:

a) The RE/RBS should not have any internal switching capabilities, i.e., the ability to directly interconnect two WTs.

b) If the RE/RBS have more than one interface at the alpha reference point, all interfaces should be connected to the same PINX.

c) Standards for the information across the alpha reference point should be limited to the information flow only (Stage 2). Signalling protocol standards (Stage 3) across the alpha reference point is considered radio technology specific and thus outside the scope of this Technical Report.

d) The network signalling protocols for the control of services and mobile functions should be based upon PSS1, and should support both cases A and B.

6.1.2 General information on roaming

The roaming function makes it possible for the user of a WTs to access PISN services between calls via different radio accesses in the PISN.

NOTE This Technical Report covers the possibility to make and/or receive calls throughout the whole PISN within the radio coverage areas of the Radio Base Statations (RBSs) connected to PINX-A and PINX-B as shown in Figure 5.

The functions needed to support roaming include the following procedures:

- location registration (collection and storage of new location information);
- location de-registration (removal of location data);
- authentication (validation of the WT and/or RE/RBS). This feature is optional.

Copyright International Organization for Standardization
Provided by IHS under license with ISO
No reproduction or networking permitted without license from IHS Not for Resale

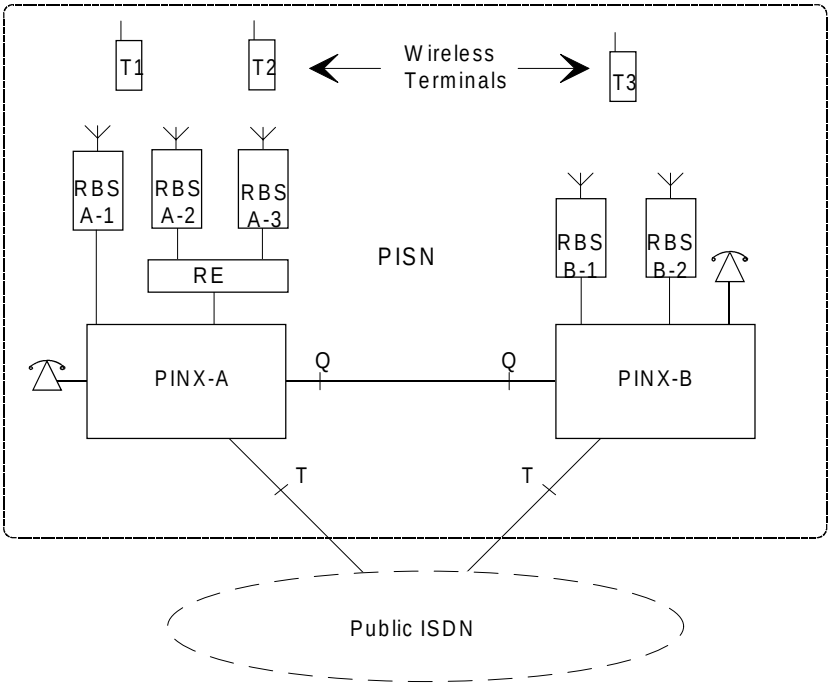

Figure 5 — Logical block diagram of a simple PISN

6.1.3 General information on handover

The purpose of handover is to provide reliable and continuous telecommunication when a call is in progress to a terminal as it moves within and/or between the coverage areas of the RBSs in the PISN. The procedures used for performing the handover are basically the same as for roaming. The handover procedure includes the process of switching over to the new call path.

The procedures involved in a handover are:

- authentication of the WT and/or the network;
- handover (change of communication path);
- location registration (if necessary).

Basically handover can be classified as either:

- internal; or
- external.

Internal handover means handover within one RE/RBS.. This is an internal function of the RE/RBS and does not require any cooperation from the PISN. Therefore, apart from identifying internal handover as a form of handover, it is not discussed any further in this Technical Report.

External handover means handover between two different RE/RBSs, e.g., when moving between RBS A-1 and RBS A-2 in Figure 5. Because external handover involves two RE/RBSs, the cooperation of the PISN is required. This form of handover is addressed in this Technical Report. Therefore the unqualified term "handover" used in this Technical Report always refers to the external form of handover.

Copyright International Organization for Standardization
Provided by IHS under license with ISO
No reproduction or networking permitted without license from IHS Not for Resale

6.2 Feature description

6.2.1 Core features

6.2.1.1 Identification

Generally the radio systems use four different identity categories for identification and addressing in the radio environment:

- connection related identities (radio internal);
- wireless terminal identities;
- fixed radio part identities;
- equipment related identities.

NOTE Equipment related identities are normally used to derive a default identity coding for a wireless terminal prior to registration and/or for making some type(s) of special call(s), e.g. an emergency call, and to identify stolen terminals.

The identities of the fixed radio part and the wireless terminal are used to:

- to transfer access information from the fixed radio parts to the wireless terminals;
- to process access requests from wireless terminals;
- to identify the fixed radio parts and wireless terminals;
- for paging;
- for charging and billing.

The basic concept for the use of these identities is that every radio base station broadcasts a unique identity. This identity contains information about the service provider (PISN identity) and the capabilities of the base station. The wireless terminal has a corresponding "identification code". The "identities" of the fixed radio parts and the wireless terminals are then checked to see if they match each other. This mechanism allows only "valid" units to be interconnected in the case where several base stations and WTs exist in the same area. A WT may contain several such identities allowing the WT to connect to many base stations and/or networks.

Copyright International Organization for Standardization
Provided by IHS under license with ISO
No reproduction or networking permitted without license from IHS Not for Resale

The identity mechanism mentioned above support functions such as:

- use of the system for different environments (e.g. residential, public or private);
- provision of globally unique identities for manufacturers, installers and operators with a minimum of central administration;
- multiple access rights for the same WT;
- freedom to tailor access rights to groups of radio systems;
- roaming agreements between different networks;
- indication of handover domains;
- indication of location areas;
- indication of subscription areas.

6.2.1.1.1 Identification of fixed radio part

The identity transmitted by the RBS is used by the WT to decide:

- if the fixed radio part belongs to the environment the WT wishes to access;
- whether or not that particular fixed radio part is the one the WT wishes to access.

6.2.1.1.2 Identification of Wireless Terminal (WT)

When a WT requests a service from the network, or if requested to by the fixed side, the terminal may supply its Wireless Terminal Identity (WTI) which enables the fixed side and/or the PISN to:

- identify the user or user's equipment (WT);
- check if the request shall be allowed or rejected.

Before the WT and/or the request is accepted by the network or RE/RBS , the PISN or RE/RBS may be required to perform an authorisation check of the WT.

Functions for assignment and handling of these identities are therefore required and need to be standardised.

Equipment related identities are used to identify the WT and are usually globally unique. The fixed part may be able to request the WT to transmit its equipment identity which could then be used by the PISN to for example, track stolen equipment.

6.2.2 Roaming

Roaming is mainly provided by the following means:

a) identities and addressing;

b) location/registration and attachment;

c) authentication

Copyright International Organization for Standardization
Provided by IHS under license with ISO
No reproduction or networking permitted without license from IHS Not for Resale

Prior to providing services to an unknown WT, it is necessary first to check if the terminal has access rights to the system. A possible process may be as follows:

- firstly, the terminal reads the identity of the RE/RBSand uses this identity to check whether it has access rights to that system. Assuming it has access rights, the wireless terminal then proceeds to register with the system;

- secondly, the WT identifies itself to the system, after which an optional authentication of the terminal may take place. Upon successful completion of this authentication, the terminal is added to the VDB and the terminal gets a temporary identity to use in the system.

The terminal can now make and receive calls.

The wireless terminal may deregister from the system by sending a request to the PISN If this request is successful, the terminal is deleted from the VDB.

6.2.2.1.1 Location registration related procedures

Four forms of location registration procedures have been identified:

- user initiated location updating. The user decides whether he wants to receive incoming calls in the radio system he is visiting (e.g. by pushing a special button);

- automatic location updating initiated by the WT. The wireless terminal initiates a location registration procedure; normally as soon as it detects having entered another location area;

- automatic location updating initiated by the fixed side. The fixed side instructs the WT to send a location registration request;

- the fixed side controls the location updating.

6.2.2.1.2 Attachment related procedures

When registered, the WT may inform the network whether it is active or not.

The intention of such messages is to minimise the load on the system by avoiding the initiation of unnecessary location registration and broadcast procedures.

6.2.2.2 Handover

Handover is the process of switching a call in progress from one physical channel to another physical channel. A request for handover from one RBS to another RBS may come from:

- the RE/RBS involved in a call; or

- a new RE/RBS.

Special areas to be addressed regarding handover are:

a) identities;

b) registration;

c) authentication;

d) interruption during handover.

Copyright International Organization for Standardization
Provided by IHS under license with ISO
No reproduction or networking permitted without license from IHS Not for Resale

As a handover depends on a number of processes taking place, there may be an interruption in the communication path to the wireless terminal. This may cause a problem for some types of calls e.g., for data communication as even short interruptions in the communication path may corrupt the data.

6.2.2.3 Authentication

6.2.2.3.1 Authentication of wireless terminal

Authentication of a wireless terminal is necessary if the network operator wants to prevent "unauthorised " terminals to access the PISN.

6.2.2.3.2 Authentication of the fixed part

In order to prevent a wireless terminal form logging onto an unauthorised fixed part, some form of authentication of the fixed part is also required. This is normally a function of the terminal, but exchange of information between the "network" and the WT may be required.

6.2.2.3.3 Mutual authentication

Mutual authentication means that both the WT and the fixed side require authentication of each other.

6.2.2.3.4 Proprietary authentication algorithms

Proprietary authentication algorithms may be required in some private networks and the standards should be able to support such functions.

6.2.3 Additional features

A general problem arises for active calls if the WT moves outside the coverage area of the current RBS or the WT is switched off. In this case the system should detect that the WT is no longer active and start a timer. If the timer expires a notification may be sent towards the network. During an active call when the WT temporarily moves outside the coverage of the current RBS, but returns within the time out value, a temporary loss of communication may occur. The WT may also return to another RBS within the same PINX .

In the case of a terminal being unreachable by the PISN, the PISN may decide to change or delete the location data.

6.3 Services

Generally all services available to wired terminals should also be available to WTs. As a minimum a WTM user should have access to the following services:

6.3.1 Basic services

Teleservices:

- telephony.

--`,,```,,,,````-`-`,,`,,`,`,,`---
Copyright International Organization for Standardization
Provided by IHS under license with ISO
No reproduction or networking permitted without license from IHS Not for Resale

Bearer services:

- 64 kbit/s unrestricted;
- 3,1 kHz audio;
- speech.

6.3.2 Supplementary services

While the basic services supported in PISN standards are of the same form as those provided to users in the public ISDN, the situation regarding supplementary services for mobile WTs is more complicated because of the following factors:

- some supplementary services may differ for wired terminals and mobile wireless terminals;
- some supplementary services may not be possible to support from a particular mobile WT;
- a WT requires new specific supplementary services applicable only to WTM.

The term Additional Network Feature (ANF) is used to describe special features which can be described as supplementary services but they are not directly available to the end users. An ANF operates autonomously within a PISN and enhances the operation of the PISN for the benefit of all users. It is not the intention of this Technical Report to describe supplementary services and/or ANFs in a PISN as these are described by other international standards and/or technical reports.

As the PISN may have to interwork with the public ISDN, the wireless terminals connected to the PISN should also interwork with the relevant supplementary services of the public ISDN.Supplementary services which have not been standardised can still be supported in a PISN as the signalling protocols at the "Q" reference point and the "alpha" reference point (i.e., between the RE/RBS and the PINX), may provide escape mechanisms for the transfer of manufacturer specific information for the support of supplementary services which are not standardised, or for the support of non-standard extensions to standardised supplementary services.

At present, it is not possible to provide a complete list of all services within each of these groups that shall be standardised and how each of these services may influence protocols at the Q reference point, and at the "alpha" reference point (i.e., between the RE/RBS and the PINX).

6.3.3 PISN Attendant services

WTs should be supported by the PISN attendant to the same extent as wired terminals. Possible additional requirements on attendant services due to WTs are, however, outside the scope of this Technical Report. The need for an attendant to be mobile is not considered necessary.

6.3.4 Radio specific supplementary services

It is expected that the WTs may require special supplementary services and/or Additional Network Features (ANF) not yet identified. This issue is , however, outside the scope of this Technical Report.

--`,,```,,,,````-`-`,,`,,`,`,,`---
Copyright International Organization for Standardization
Provided by IHS under license with ISO
No reproduction or networking permitted without license from IHS Not for Resale

6.4 Interaction considerations

6.4.1 Wireless systems

The PSS1 protocol standards for WTM should be independent of the radio access system that is used.

6.4.2 Interworking with existing services

The standards should support interworking with other services offered by the PISN or other networks as if the WT was a "normal" wired terminal. Ideally a WTM user should see no differences in the set of services and/or user procedures when accessing the PISN services at various PINXs. However, as discussed in 4.5 this may not always be possible.

6.5 Security aspects

In a PISN offering network wide mobility services, both the WTs and the PISN operator are vulnerable to unauthorised intrusion and misuse by third parties. In addition, special measures should be provided in order to protect the WTs integrity (e.g. location at a given time etc.). However, this subclause only addresses security aspects related to the use of the WT itself and not the security aspects associated with the user of the terminal.

6.5.1 Security related functions

The following two techniques may be used to protect the PISN, the WTs and the exchanged information:

- authentication;
- encryption.

NOTE Protection of transmitted information is essential on the radio link, but may also be required on the links between the nodes within the PISN. However, this topic is outside the scope of this Technical Report as this is a general PISN problem.

6.5.1.1 Authentication of wireless terminal

Authentication is the process whereby a WT is positively verified to have the right to communicate. Authentication may be requested at any time. If a terminal has to be authenticated, and its specific parameters are unknown, the authentication process will require functions which support retrieval of authentication parameters from the network, i.e., the Home Data Base (HDB).

Stolen or lost WTs may represent a risk in a PISN and it should be possible to keep a list of such terminals and to disable such WTs from accessing the PISN by e.g., erasing data stored in the WT. The WT can no longer be used and has to be taken to the network operators maintenance centre for re-programming.

6.5.1.2 Authentication of the fixed part

In order to prevent a WT from logging onto a "phoney" or incorrect fixed part, optional functions for the authentication of a RE/RBS are also required. The procedure for the authentication of a RE/RBS is quite similar to the procedure for authentication of a wireless terminal. One example where it may be necessary to issue an authentication request of the RE/RBS is when the RE/RBS wants to erase the «access data» in the WT.

Copyright International Organization for Standardization
Provided by IHS under license with ISO
No reproduction or networking permitted without license from IHS Not for Resale

6.5.1.3 Mutual authentication

Mutual authentication allows a WT and a RE/RBSto authenticate each other. It is possible to achieve this by combining the authentication of the terminal and the network and thus avoid an explicit mutual authentication mechanism.

6.5.1.4 Proprietary authentication functions

Proprietary authentication algorithms may be required in some private networks and should be supported by the standards.

6.5.2 Support for encryption functions over the radio interface

Encryption functions over the radio interface may be required in certain applications. The encryption of both user information and signalling information might be required.

6.5.3 Functions to prevent unauthorised access

The following issues are related to this area:

- protection against use of unauthorised terminals;
- protection against unauthorised calls from sources outside the PISN;
- protection against unauthorised calls from sources within the PISN. The standards should support functions whereby a WT can be verified to have the right to communicate via a particular RE/RBS;
- protection against use of stolen equipment. The access rights for a WT can be temporarily and/or permanently withdrawn by sending a command to the WT which erases the memory in the WT. In addition the databases should also be updated such that the WT's Dialling Number (DN) is "black listed";
- authentication for access to user mobility data in network databases;
- authentication for secure answer;
- confidentiality of present location;
- confidentiality of identity;
- confidentiality of user data;
- data retrieval.

6.6 Signalling aspects

6.6.1 Signalling between the wireless terminals and the fixed radio parts

The signalling on the air interface between the WT and the RE/RBS as well as the signalling between the RE/RBS and the PINX is outside the scope of this Technical Report.

It is, however, recommended that the signalling system to be used between the RE/RBS and the PINX shall enable the use of ISDNterminals connected to a S reference point in the WT so that the mobility requirements laid down in this Technical Report still can be supported.

Copyright International Organization for Standardization
Provided by IHS under license with ISO
No reproduction or networking permitted without license from IHS Not for Resale

6.6.2 Signalling between PINXs

The signalling system to be used between the PINXs shall be based on ISO/IEC 11572 and ISO/IEC 11582.

6.6.3 Signalling between public networks and PINX

The signalling across the reference point T towards public networks is outside the scope of this Technical Report.

6.7 Management, administration and operation

6.7.1 Configuration management

NOTE Configuration, as used in this Technical Report, is also called subscription registration.

It is anticipated that the management functions required for configuration and amendments that apply for wired terminals also apply to the wireless terminals. However, the radio systems may require some special functions related to the wireless terminals which may have an impact on the PISN and its functions.

6.7.1.1 Configuration management of wireless terminals

6.7.1.1.1 Configuration procedure (on-air)

Normally the WT has to be taken into a maintenance centre if the data kept in the terminal has to be modified. However, both from the user's as well as from the network operator's point of view, it would be desirable if this could be done remotely, i.e., "over the air interface". This does, however, require a standardised procedure for transmission of the configuration data to the RE/RBS.

Examples of such types of data are:

- WT's identity;
- WT's visiting identity;
- information about authentication key/process;
- WT's class of service.

The method by which this configuration data is loaded into the WT over the air-interface is outside the scope of this Technical Report.

6.7.1.1.2 Exchange of configuration data (on-air)

This function allows the exchange of subscription data between the network and the wireless terminal in real-time over the air interface. No subscriber/user actions are necessary.

--`,,```,,,,````-`-`,,`,,`,`,,`---
Copyright International Organization for Standardization
Provided by IHS under license with ISO
No reproduction or networking permitted without license from IHS Not for Resale

6.7.1.1.3 Suspension/termination of access rights (on-air)

This function allows the fixed part to suspend or terminate the access rights of a WT. Normally the WT shall have the right to authenticate the fixed part before acting on the instructions received from the fixed side. The following variations of this function are foreseen:

- suspension/termination of all access rights;
- re-programming of some of the data (e.g. account data) held in the wireless terminal so that access rights are suspended subject to certain conditions being met, coupled with the ability to reprogram the data again in order to reinstate access rights once these conditions have been met;
- re-programming of data (e.g. account data) held in the wireless terminal so that access rights are terminated and such that it cannot be reinstated except by following a full a re-registration procedure.

Application of this procedure may e.g. be in the case of a portable being reported stolen or lost or after the subscription has been cancelled.

6.7.1.2 Management procedures for wireless terminals

The procedures and features described in this subclause are recommended for use by the "PISN Network Supervisor (SUP)" in order to support mobility of wireless terminals.

The standards shall not specify how the supervisor accesses these functions, as this is a matter to be decided by the equipment manufacturer, but should address issues related to data structures, signalling systems and protocols, call state messages, updating of databases, transfer of information, fault recovery, unavailability of databases etc.

6.7.1.2.1 Network identity

Ideally the network identity of the WT shall be its directory numberIt is recommended that several identities may be allocated a given WT in order that it can access more than one application. As the WTs identities are transmitted unencrypted over the air-interface and thus commonly available a feature should be available allowing «secret» identities which only can be read by those having authorisation to do so.

7 PPM on top of WTM

7.1 WTM

WTM refers to the capability of a PISN to support PISN services to users of a WT as he/she moves around within the PISN. The PISN services may be provided at any appropriate radio access point to any WT within the coverage area provided the WT has access rights to that system. A PISN supporting WTM must incorporate provisions for automatically identifying, locating and tracking the WT both between calls and during a call.

If the user of a WT does not subscribe to the PPM service, there is a fixed and permanent association between the WT and the user. This user is called, in this report, a WTM user while a PISN user subscribing to both the PPM and the WTM service is referred to as a PPM user.

Figure 6 illustrates the WTM concept. It describes the state of the PISN after the WTM user has arrived at the Visitor PINX. The PISN has modified the WTM user's entry in the HDB which now points to the Visitor PINX. Also, a VDB entry has been established which specifies the WTM user's current access number and supports his access to PISN services at the Visitor PINX. The VDB can be reached from the Visitor PINX.

Copyright International Organization for Standardization
Provided by IHS under license with ISO
No reproduction or networking permitted without license from IHS Not for Resale

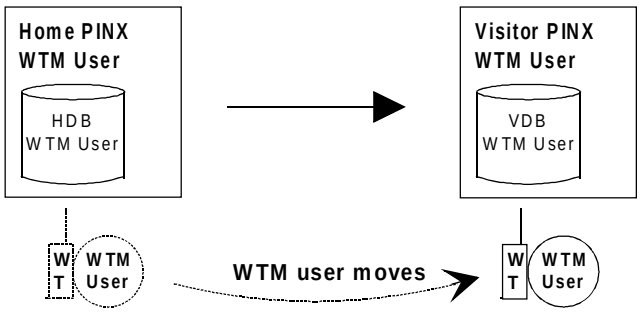

Figure 6 — Illustration of WTM

7.2 General aspects of providing PPM on top of WTM

In a PISN which supports both WTM and PPM, interactions arise between the two types of mobility if they are allowed to be used concurrently and without any restrictions. Before discussing possible interaction scenarios and implementation options for realising a consistent set of mobility services, it is proposed to maintain the following principles in a combined WTM - PPM environment:

a) PPM registration must be possible both on wired and on wireless terminals.

b) A PPM user must be allowed to register, by means of the usual procedure, on a WT which does not host any user at the time of registration.

c) The PISN services offered to a PPM user, as well as the PPM registration procedure, must be independent of whether the hosting terminal is wired or wireless.

7.3 Examples of PPM - WTM interactions

The following examples were chosen to highlight some of the problems and questions which arise in a combined WTM - PPM environment.

a) A PPM user registers on another PISN user's WT.

Problem: How is the PPM registration updated in the PISN when both users move to another location area with the WT? Note that it cannot be expected from the PPM user to re-register in the new location area.

b) A PPM user who owns a WT registers on another terminal, leaving his WT without a PISN user (PISN number) assigned to it.

Problem: How is the WT identified and tracked by the PISN? How are PPM registrations carried out on the WT?

c) A PPM user registers on a WT hosting another PPM user who owns the WT. Both users together move to another location area with the WT, where the WT owner leaves and registers on another terminal.

Problem: It must be ensured that the separation of the WT owner from his WT neither affects the PISN service for the remaining PPM user, nor the possible registration of other PPM users on the WT.

d) Both the WTM user (with his WT) and a PPM user registered on the WT are outside their home areas.

Problem: How are the WTM/PPM user's HDBs/VDBs "chained" together? What is the precise meaning of a WTM and PPM data base in a combined WTM - PPM environment? What are the advantages and disadvantages of the various options for organising the data bases?

Copyright International Organization for Standardization
Provided by IHS under license with ISO
No reproduction or networking permitted without license from IHS Not for Resale

These examples and associated questions indicate that a unified view of PPM and WTM needs to be adopted in order to implement both types of mobility in a consistent and efficient manner. Several distinct routes are identified to achieve this goal. Subclause 7.5 will introduce and discuss the most straightforward and promising options.

7.4 The concept of a "WT number"

A WTM user who does not subscribe to the PPM service is by definition not capable of registering at another access. However, if a WTM user does subscribe to the PPM service (such a user is referred to as a PPM user), he can register at any PISN terminal, thus leaving his WT without a PISN user assigned to it. In order for the PISN still to be able to identify and track the WT and allow PPM users to register on it using normal procedures, the following two alternative schemes are identified:

a) A WT that is a PPM user's home terminal is assigned a permanent, unique identifier which may either be a PISN number or an alternative identifier. This "WT number" thus plays the role of a WTM number or an alternative identifier. However, since no PISN user is associated with the WT number, calls to and from the WT should be barred. This provision can be accomplished by adjusting the WT number's "service profile" accordingly (call barring). A PPM user can register on the WT exactly as in the case when it is owned by a WTM user.

   An obvious advantage of this scheme is that all mobility and call handling procedures defined in WTM can be applied without any modifications. A drawback is that each WT that is a PPM user's home terminal is assigned a unique PISN number which does not correspond to a PISN user.

b) A WT that is a PPM user's home terminal is assigned the same PISN number as the PPM user, rather than a different number. Since a single PISN number now corresponds to two different entities in the PISN (WT and PPM user), the PISN must distinguish between the WT and the PPM user in all its procedures. For example, in the case of an incoming call to a PISN number corresponding both to a WT and a PPM user, the call must always be routed to the PPM user. Similarly, when the WT initiates a location update procedure, the PISN must update the WT's location, rather than the location of the PPM user with the same PISN number.

   Although this scheme avoids the inefficient use of PISN numbers, problems may arise in existing PISNs due to the fact that a single PISN number may correspond to two different PISN entities. For example, standard PISN management procedures and tools are based on the assumption that a PISN number uniquely identifies a PISN entity. Furthermore, new requirements on WTM or PPM may arise in the future which could be difficult or impossible to implement if scheme "b" is adopted. An example of such a requirement could be the emergency call service. In this service, a WT must support both outgoing and incoming emergency calls even if no PISN user is associated with it at the time of the call. If the WT's PISN number is not unique, emergency calls cannot be sent to the WT on an exclusive basis.

NOTE The problem of identifying a wired terminal during a period when it does not host any PISN user is a PINX-internal matter, and is therefore not considered here. The only requirement is that PPM users must be able to register on such a terminal by means of the usual procedures, independent of whether or not the terminal hosts a PISN user.

The PPM standards should be independent of whether scheme "a" or scheme "b" is adopted.

7.5 Options for providing PPM on top of WTM

7.5.1 Basic options

In the following scenarios, it is assumed that the WT is used by a WTM user who does not subscribe to the PPM service. If the WT is the home terminal of a PPM user, the WTM user shown in Figures 8, 9 and 10 can be considered to be a WT number combined with this PPM user, as is illustrated in Figure 7.

Copyright International Organization for Standardization
Provided by IHS under license with ISO
No reproduction or networking permitted without license from IHS Not for Resale

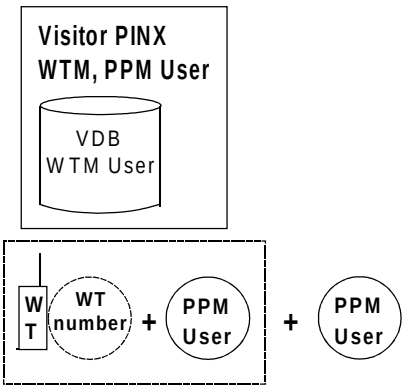

Figure 7 — Illustration of the concept of a WT number

7.5.1.1 Basic Option 1

Figure 8 shows the state of the PISN which results when the PPM user registers on the WTM user's WT at their common Visitor PINX.

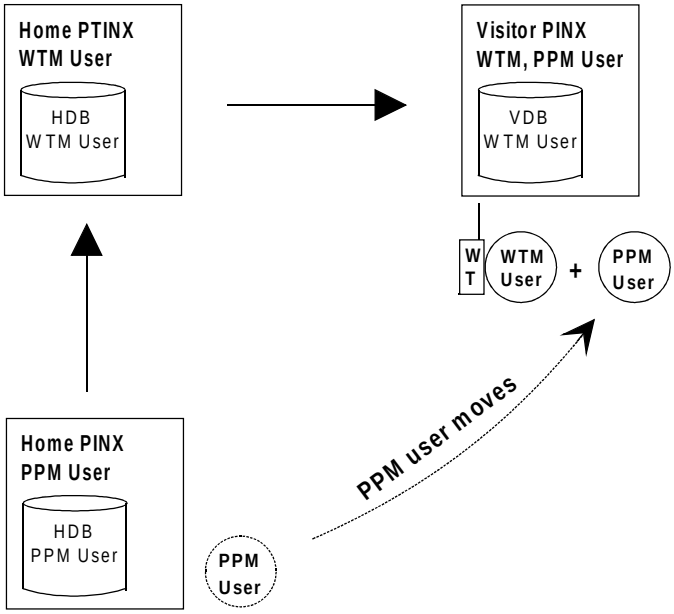

Figure 8 — Illustration of Basic Option 1

Basic Option 1 is specified in terms of the following configuration:

1) The PPM user's HDB points to the WTM user's access number at the WTM user's Home PINX.

2) According to the WTM specification, the WTM user's HDB points to the WTM user's VDB, which contains the WT's current access number. No VDB entry exists for the PPM user in this option.

The following operations apply under the two conditions indicated above:

a) Incoming WTM call: Incoming WTM calls arrive via the Home PINX of the WTM user; they are not affected by the PPM registration.

Copyright International Organization for Standardization
Provided by IHS under license with ISO
No reproduction or networking permitted without license from IHS Not for Resale

b) Incoming PPM call: An incoming PPM call arrives at the PPM user's Home PINX, where it is re-directed to the WTM user's access number at his Home PINX as specified in the PPM user's HDB. The WTM user's Home PINX in turn re-directs the call to the WT's current location as specified in the WTM user's HDB.

Outgoing WTM call: Outgoing WTM calls are not affected by the PPM registration.

a) Outgoing PPM call: An outgoing call is initiated by the PPM user at the Visitor PINX. In order to make the service profile available to the calling PPM user, the Visitor PINX consults the PPM user's HDB via his Home PINX. This remote and indirect query is necessary since, in this option, no VDB for the PPM user exists in the visitor area.

b) The PPM user re-registers in another visitor area: The new registration will proceed according to the applicable PPM registration procedures independent of the nature (Wireless or wired) of the old hosting terminal.

c) The WTM user moves with the PPM user to another location area: The location update will prompt the PISN to modify the WTM user's HDB entry accordingly. No other actions are necessary in this option.

Discussion:

The main advantage of Option 1 is the simple registration procedure involved when the WTM user moves with the WT and the PPM user registered on it. In fact, since the PPM user's Home PINX points to the WTM user's access at his Home PINX, only the usual WTM location update procedure needs to be invoked. However, because of the absence of a VDB entry for the PPM user, outgoing PPM calls will involve remote queries, via the PPM user's Home PINX, of the PPM user's HDB. Although a registration session for outgoing calls is possible at the Visitor PINX, the corresponding information, and thus the registration, is lost when the WT is moved to another location area. Incoming PPM calls involve, in addition to the PPM user's Home PINX and the Visitor PINX, also the WTM user's Home PINX (Home PINX PPM user -> Home PINX WTM user -> Visitor PINX).

7.5.1.2 Basic Option 2

Figure 9 shows the state of the PISN which results when the PPM user registers on the WTM user's WT at their common Visitor PINX.

--`,,```,,,,````-`-`,,`,,`,`,,`---

Copyright International Organization for Standardization
Provided by IHS under license with ISO
No reproduction or networking permitted without license from IHS Not for Resale

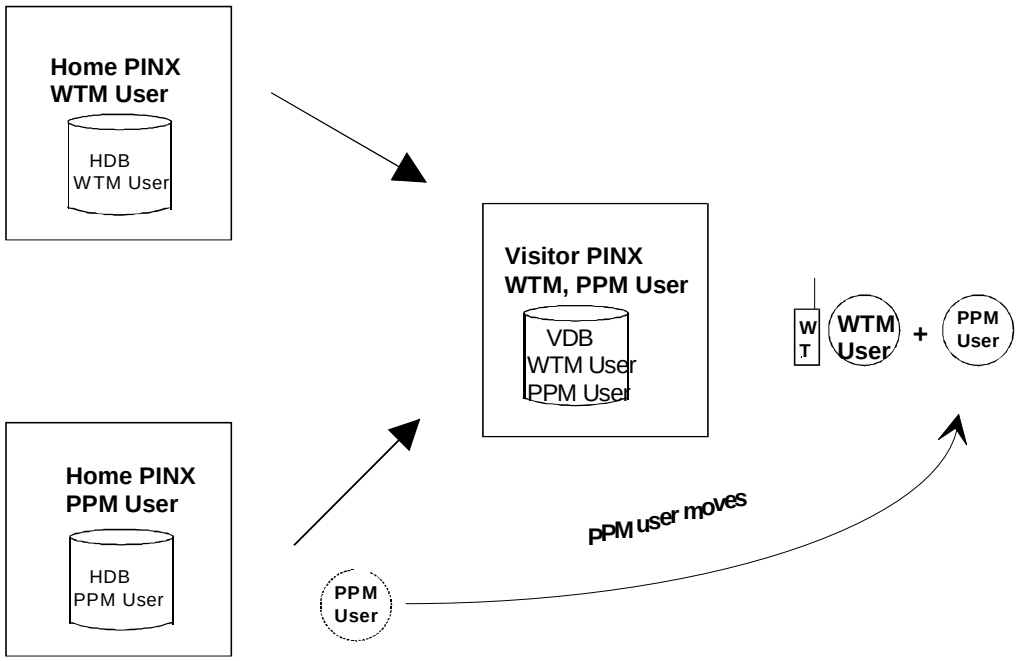

Figure 9 — Illustration of Basic Option 2

Basic Option 2 is specified in terms of the following configuration:

1) The PPM user's HDB points to the Visitor PINX.

2) The VDB in the visitor area contains the PPM user's entry which identifies his current access.

The following operations apply under the two conditions indicated above:

a) Incoming WTM call: Incoming WTM calls arrive via the Home PINX of the WTM user; they are not affected by the PPM registration.

b) Incoming PPM call: An incoming PPM call arrives at the PPM user's Home PINX, where it is re-directed to the current Visitor PINX as specified in the PPM user's HDB.

Outgoing WTM call: Outgoing WTM calls are not affected by the PPM registration.

a) Outgoing PPM call: An outgoing call is initiated by the PPM user at the Visitor PINX. In order to make his service profile available to the calling PPM user, the Visitor PINX consults the PPM user's VDB entry which is directly accessible from the Visitor PINX.

b) The PPM user re-registers in another visitor area: The new registration will proceed according to the applicable PPM registration procedures independent of the nature (Wireless or wired) of the old hosting terminal.

c) The WTM user moves with the PPM user to another location area: The location update will prompt the PISN to modify the WTM user's HDB entry according to the WTM user's new location, and establish the WTM user's New VDB entry. Secondly, when the WTM user's Old VDB entry is deleted, the Old Visitor PINX will detect the need for PPM re-registration, and invoke a remote PPM registration to establish a PPM registration session at

Copyright International Organization for Standardization
Provided by IHS under license with ISO
No reproduction or networking permitted without license from IHS Not for Resale

the New Visitor PINX. A corresponding message is sent to the WTM user's Home PINX, which is able to relay it to the New Visitor PINX where the hosting WT is now located. The subsequent procedures are the same as those required for local PPM registration.

Discussion:

Both incoming and outgoing PPM calls involve only the smallest possible set of procedures and data base queries. In particular, incoming PPM calls are directly forwarded to the Visitor PINX, without involving the WTM user's Home PINX. However, an extensive (though straightforward) set of procedures needs to be invoked when the WTM user moves with the WT and the PPM user registered on it. These update procedures involve data flows and interactions between WTM-related entities and PPM-related entities.

7.5.1.3 Basic Option 3

Figure 10 shows the state of the PISN which results when the PPM user registers on the WTM user's WT at their common Visitor PINX.

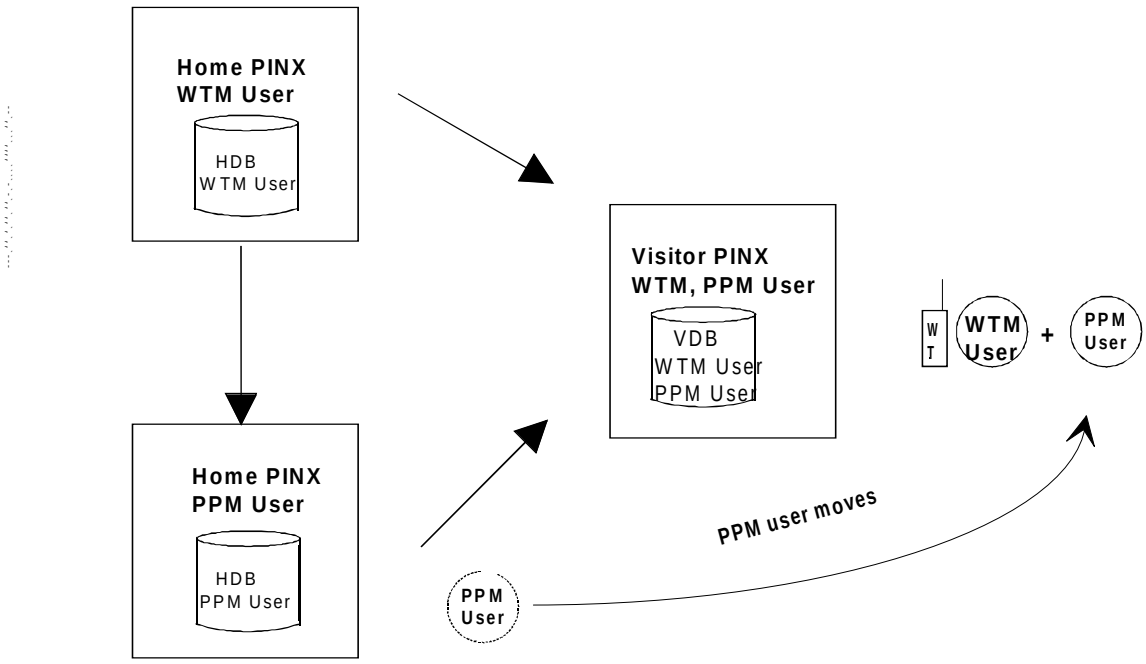

Figure 10 — Illustration of Basic Option 3

Basic Option 3 is specified in terms of the following configuration:

1) The PPM user's HDB points to the Visitor PINX (as in Basic Option 2).

2) The VDB in the visitor area contains the PPM user's entry that identifies his current access (as in Basic Option 2).

3) The WTM user's HDB contains an entry specifying the identity of the PPM user registered on the relevant WT.

Copyright International Organization for Standardization
Provided by IHS under license with ISO
No reproduction or networking permitted without license from IHS
Not for Resale

The following operations apply under the conditions indicated:

a) Incoming WTM call: Incoming WTM calls arrive via the WTM user's Home PINX; they are not affected by the PPM registration.

b) Incoming PPM call: An incoming PPM call arrives at the PPM user's Home PINX, where it is re-directed to the current Visitor PINX as specified in the PPM user's HDB.

Outgoing WTM call: Outgoing WTM calls are not affected by the PPM registration.

a) Outgoing PPM call: An outgoing call is initiated by the PPM user at the Visitor PINX. In order to make his service profile available to the calling PPM user, the Visitor PINX consults the PPM user's VDB which is directly accessible from the Visitor PINX.

b) The PPM user re-registers in another visitor area: The new registration will proceed according to the applicable PPM registration procedures independent of the nature (Wireless or wired) of the old hosting terminal. Additionally, the corresponding PPM entry in the WTM user's HDB is deleted.

c) The WTM user moves with the PPM user to another location area: The location update will prompt the PISN to modify the WTM user's HDB entry according to the WTM user's new location, establish the WTM user's New VDB entry, and delete his Old VDB entry. The PPM entry in the WTM user's HDB remains unchanged. Furthermore, the WTM user's Home PINX will instruct the PPM user's Home PINX to update the PPM user's HDB entry according to the new location. The PPM user's Home PINX will then order the PPM user's Old VDB entry to be deleted, and initiate the establishment of his New VDB entry.

Discussion:

As in Basic Option 2, both incoming and outgoing PPM calls in Basic Option 3 involve only the smallest possible set of procedures and data base queries. Compared with Basic Option 2, less extensive operations need to be invoked when the WTM user moves with the WT and the PPM user registered on it. However, a considerable disadvantage of Basic Option 3 is that a WTM entity (the WTM user's HDB) is modified when a PPM user registers on the WTM user's WT.

7.5.2 Summary of discussion of the basic options

The above three basic options for providing PPM on top of WTM differ with respect to the procedures involved for PPM registration and the handling of incoming and outgoing calls.

In Basic Option 1, no VDB entry is foreseen for the PPM user in the visitor area. As a consequence, no PPM re-registration is required when the PPM user moves with the hosting WT. On the other hand, extensive and time-consuming procedures are required for incoming and outgoing PPM calls. Moreover, a registration session for outgoing calls is lost when the WT is moved to another location area.

Basic Option 2 entails simple and straightforward procedures to handle incoming and outgoing calls. On the other hand, extensive though straightforward data flows occur between WTM and PPM related entities when the PPM user moves with his hosting WT. The WTM service itself is not affected.

In Basic Option 3, incoming and outgoing calls are handled as efficiently as in Basic Option 2. In contrast to Basic Option 2, however, a PPM-related entry is required in the WTM user's HDB, thus requiring changes to existing WTM standards.

In conclusion, considering the advantages and disadvantages of these options, Basic Option 2 is identified as the most promising implementation route for providing PPM in a WTM environment. Basic Option 2 should therefore be the sole basis for the PPM standards.

Copyright International Organization for Standardization
Provided by IHS under license with ISO
No reproduction or networking permitted without license from IHS Not for Resale

7.5.3 Extended options

The extended options proposed below are based on the basic options introduced in subclause 7.5.1 In the extended options. However, it is additionally assumed that the WT has the capability to store the identities of the PPM users registered on it (PPM numbers). This capability involves potential benefits in the case when a registered PPM user moves with his hosting WT to another visitor (location) area, as discussed below. Provisions must also be made to delete this registration when the PPM user leaves the WT. The de-registration of a PPM user from a WT should be invoked by the PISN at the time when the PPM user registers on another terminal; alternatively, the PPM user may de-register from the WT before leaving the location area.

NOTE The capability of a WT to store the identities of PPM users may be implemented by introducing a "PPM card", which would store the PPM number as well as potential authentication parameters. Inserting the PPM card into a WT (or wired terminal) would invoke PPM registration, and removing it would invoke de-registration.

The PPM standards should not assume any PPM-specific intelligence in the terminal.

7.5.3.1 Extended Option 1

In Basic Option 1, the movement of a PPM user with his hosting WT does not involve any updates of PPM-related data bases. Therefore, there are no advantages associated with the capability of a WT to store PPM numbers.

7.5.3.2 Extended Option 2

The re-registration process for a PPM user moving with the hosting WT is rather complex in Basic Option 2. These procedures, which involve several interactions between WTM-related entities and PPM-related entities, are simplified considerably if the WT can store PPM numbers.

If, in Extended Option 2, a PPM user moves with his hosting WT, the New Visitor PINX is informed by the WT about the registered PPM user's identity. This is equivalent to an explicit PPM (re-) registration action carried out by the PPM user himself. As a result, it is possible to have both an automatic WTM re-registration (as usual), and an automatic PPM re-registration. In fact, after the WTM location update has been completed, the PISN-internal PPM re-registration procedures can proceed exactly as in the case of a user-activated PPM registration, without any interaction with WTM-related entities.

7.5.3.3 Extended Option 3

In Basic Option 3, the re-registration of a PPM user moving with his hosting WT was somewhat simpler than in Basic Option 2 due to fact that the registered PPM number was stored in the WTM user's HDB. In Extended Option 3, the registered PPM number is stored in the WT, which obviates the need to store it also in the WTM user's HDB. A consequence, Extended Option 3 is identical to Extended Option 2.

7.6 Information flows and procedures for PPM using WTM terminals

This subclause outlines the information flows and procedures required for PPM registration, incoming PPM calls, and outgoing PPM calls employing WTM terminals.

In subclause 7.5, six options for implementing PPM on top of WTM were introduced. The following analysis will concentrate only on the most promising options, Basic Option 2 (see 7.5.1.2) and Extended Option 2 (see 7.5.3.2).

Copyright International Organization for Standardization
Provided by IHS under license with ISO
No reproduction or networking permitted without license from IHS Not for Resale

7.6.1 Information flows for PPM registration

As regards PPM registration in a WTM environment, two different situations must be distinguished:

a) The PPM user leaves his previous visitor area, where he has been registered on a wired or Wireless terminal, and registers on a WT in a new visitor area.

b) The PPM user moves with his hosting WT (and the WT's WTM user) to a new location area. In this case, PPM re-registration will have to be initiated by the PISN along with WTM location registration (automatic PPM re-registration).

7.6.1.1 Basic Option 2

7.6.1.1.1 PPM registration

The information flows associated with a PPM registration procedure in Basic Option 2 are shown in Figure 11. The figure depicts the procedures which occur in the PISN when a PPM user registers on a WT. It is assumed that the WT is already registered at the time when the PPM user arrives.

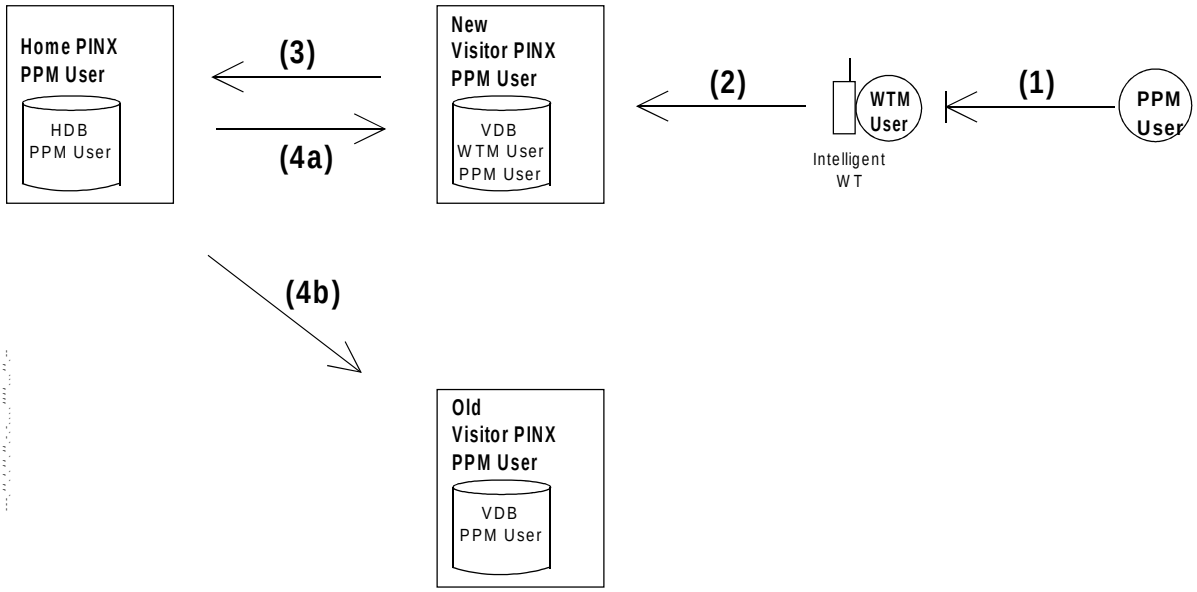

Figure 11 — Information flows for PPM registration on a WT for Basic Option 2

The information flows indicated in Figure 11 above are the following:

1) The PPM user registers by identifying himself (e.g. in terms of his PPM number), and by specifying the type of PPM service he intends to use at the hosting terminal; authentication procedures may apply.

2) The hosting WT registers the PPM user on the New Visitor PINX. At the time of registration, the hosting terminal may host only the WTM user, or one or more other PPM users.

3) The PPM user's New Visitor PINX informs the PPM user's Home PINX about the registration attempt. The Home PINX updates the PPM user's HDB according to the PPM user's New Visitor Area.

4)

   a) The PPM user's Home PINX transfers the required user profile data to the New Visitor PINX, which updates its associated VDB accordingly.

Copyright International Organization for Standardization
Provided by IHS under license with ISO
No reproduction or networking permitted without license from IHS Not for Resale

b) The PPM user's Home PINX instructs the Old Visitor PINX to de-register the PPM user on its associated VDB. At this time, any statistical and accounting data which may have accumulated during the registration period may be sent to a specified PISN entity (e.g. the PPM user's Home PINX).

NOTE These steps are analogous to the corresponding information flows for PPM registration on a wired terminal

7.6.1.1.2 Automatic PPM re-registration

Figure 12 illustrates the information flows which occur in the PISN when the PPM user moves to a new location area with his hosting WT. Upon arrival, the usual WTM location registration procedures are initiated first. Since the PPM user cannot be expected to re-register manually, the PISN has to carry out the necessary procedures automatically, i.e., without any user intervention. This includes any authentication procedures which may be required for PPM registration.

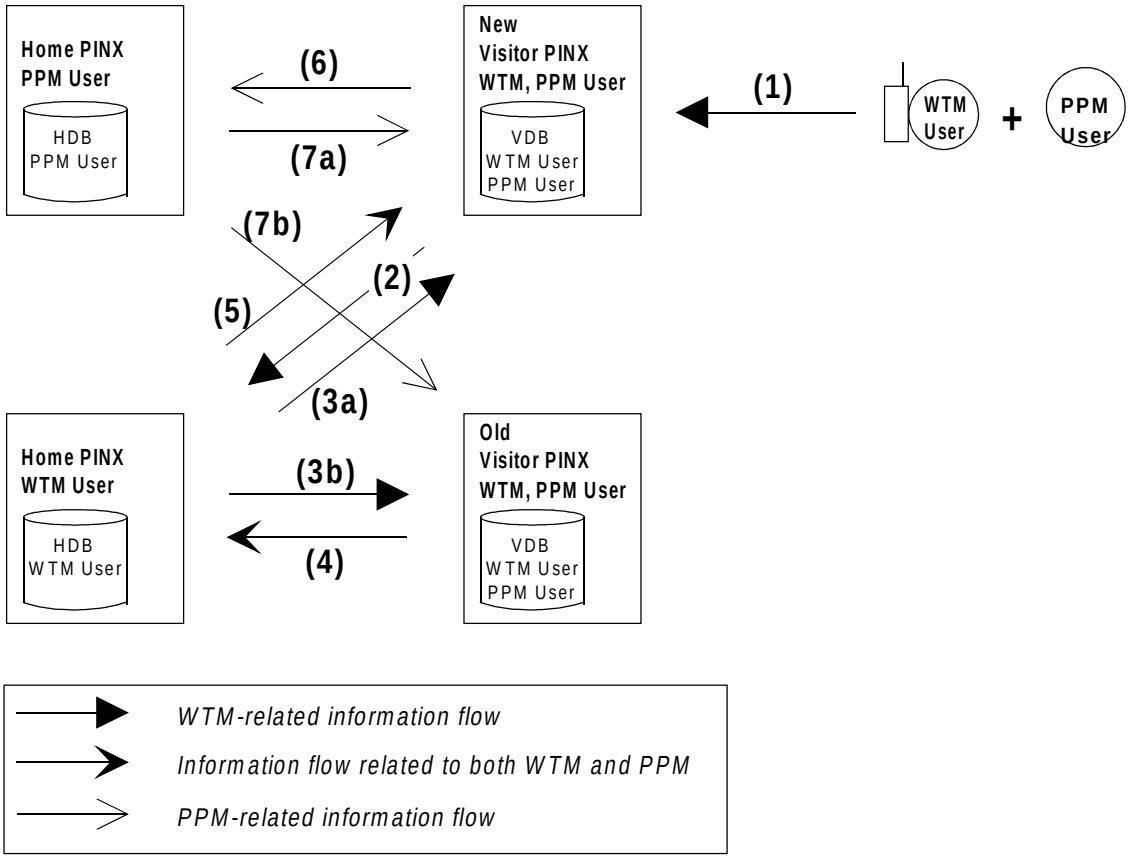

Figure 12 — Information flows for automatic PPM re-registration on a WT for Basic Option 2

The information flows indicated in Figure 12 are the following:

1)-3) These are the usual WTM location update procedures.

4) The Old Visitor PINX detects that a PPM user is registered on the WT whose registration is being cancelled, and informs the WTM user's Home PINX accordingly.

5) The WTM user's Home PINX informs the New Visitor PINX about the PPM user who is registered on the WT.

6)-7) These are the usual PPM registration procedures, initiated by the New Visitor PINX upon reception of information flow 5 rather than by PPM user actions.

Note that steps 4 and 5 describe information flows which are absent in both WTM location update and PPM registration. If several PPM users with different Home PINXs are registered on the WT, they can all be accommodated simultaneously by these two information flows.

Copyright International Organization for Standardization
Provided by IHS under license with ISO
No reproduction or networking permitted without license from IHS Not for Resale

7.6.1.2 Extended Option 2

7.6.1.2.1 PPM registration

The information flows associated with a PPM registration procedure in Extended Option 2 are shown in Figure 13. Extended Option 2 differs from Basic Option 2 in that the former option assumes intelligent WTs, which are capable of storing PPM registrations. The figure depicts the procedures which occur in the PISN when a PPM user registers on a WT. It is assumed that the WT is already registered at the time when the PPM user arrives.

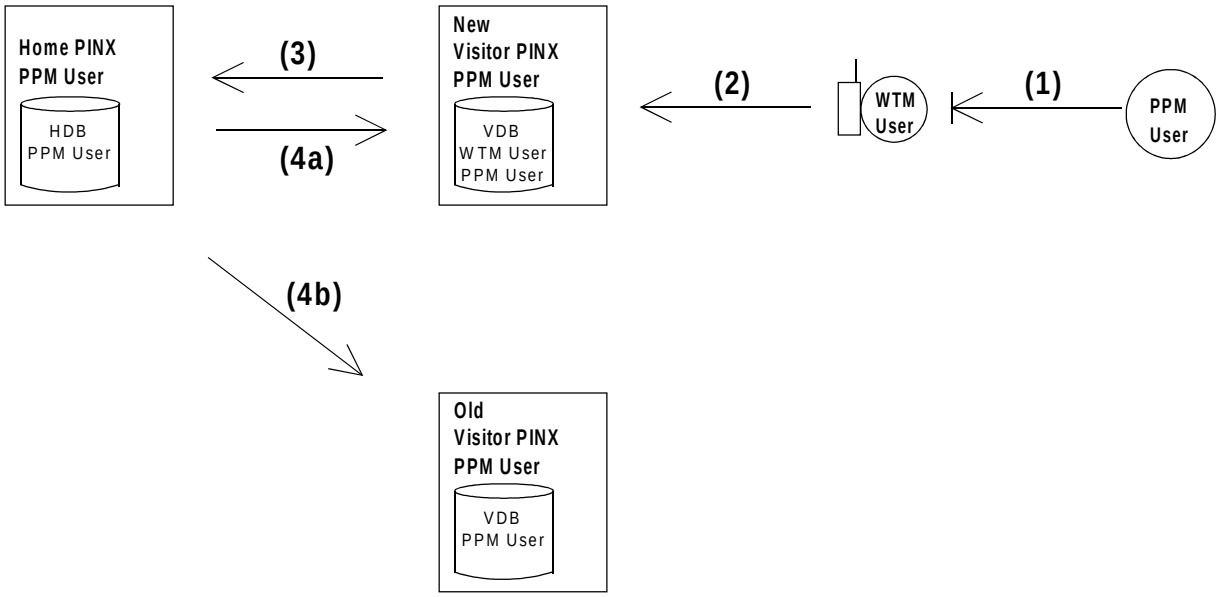

Figure 13 — Information flows for PPM registration on a WT for Extended Option 2

Except for the fact that the WT stores the identity of the registered PPM user, all procedures indicated in Figure 13 are identical to those shown in Figure 11 (Basic Option 2).

In the PPM registration procedure outlined in Figure 12, it has been assumed that the PPM user's previous registration has been on a wired terminal. If the previous registration has been on an (intelligent) WT, and the PPM user has not explicitly de-registered, the PPM entry in the previous WT needs to be deleted as part of the procedures shown in Figure 13 . This involves a message to be sent from the previous WT's (current) PINX to the previous WT.

7.6.1.2.2 Automatic PPM re-registration

Figure 14 illustrates the information flows which occur in the PISN when the PPM user moves to a new location area with his hosting WT. The hosting WT contains the registered PPM user's identity (PPM number).

Copyright International Organization for Standardization
Provided by IHS under license with ISO
No reproduction or networking permitted without license from IHS
Not for Resale

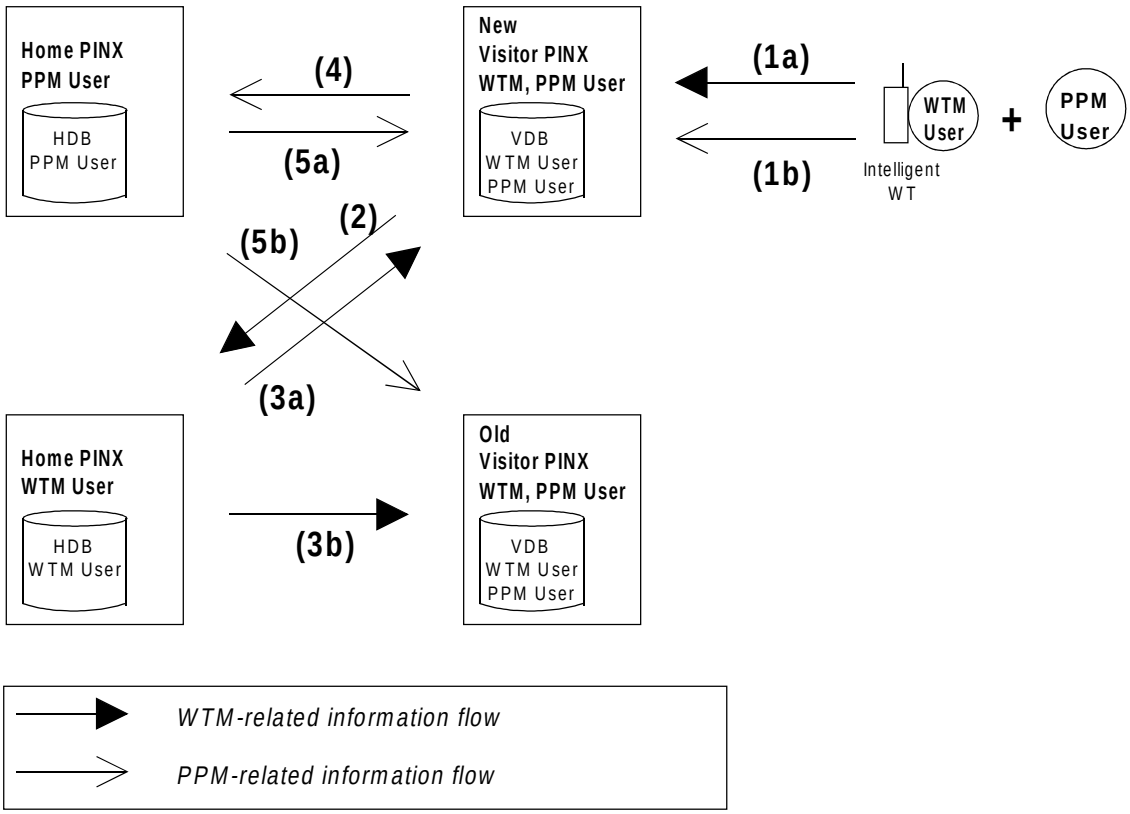

Figure 14 — Information flows for automatic PPM re-registration on a WT for Extended Option 2

The information flows indicated in Figure 14 are the following:

1) The WT initiates the location update procedures by transmitting the relevant WTM (1a) and PPM (1b) related data to the New Visitor PINX.

2)-3) These are the usual WTM location update procedures. No interactions with PPM-related entities occur.

4)-5) These are the usual PPM registration procedures, which proceed without any interactions with WTM-related entities.

It should be emphasised that, in Extended Option 2, the WTM-related procedures and the PPM-related procedures within the PISN operate completely independent of each other. This separation of procedures becomes possible with the WT's capability to store PPM numbers. The only remaining interactions between WTM and PPM occur locally at the New Visitor PINX.

7.6.2 Procedures for incoming PPM calls

Incoming calls to a PPM user registered on a WT rely on location information, to be provided by the PISN, pertaining both to the PPM user and to his hosting WT. In Option 2 (both versions), it is ensured that the PPM user's HDB always contains the current location area of the WT which hosts the PPM user. Therefore, the PPM user's Home PINX can route incoming PPM calls directly to the relevant Visitor PINX in a manner analogous to the case of an incoming call to a PPM user registered on a wired terminal.

The procedures required for incoming PPM calls are the same in the two versions of Option 2.

Copyright International Organization for Standardization
Provided by IHS under license with ISO
No reproduction or networking permitted without license from IHS Not for Resale

7.6.3 Procedures for outgoing PPM calls

The PISN-internal procedures required for outgoing calls made by a PPM user are independent of whether the hosting terminal is wired or wireless.

7.6.4 Conclusion

The focus of this report has been on the problem of defining PPM in a PISN which supports both wired and wireless terminals. While the case of PPM on wired terminals turns out to be rather straightforward, intricate service interactions can arise if PPM is to be provided in a WTM environment.

This report identified typical PPM - WTM interaction scenarios, and analysed several options for implementing both types of mobility in a consistent and efficient manner. The most promising options were studied in more detail in terms of the PISN-internal information flows and procedures required for PPM registration, incoming PPM calls, and outgoing PPM calls.

According to the overall view of mobility outlined in this report, PPM represents the primary mobility service: PPM registration must be possible on both wired and wireless terminals, and the PISN services offered to PPM users must be independent of the type of terminal employed. In addition, it is desirable to organise the mobility-related data and information flows in the PISN in such a way that WTM procedures are least affected, and interactions between PPM-related entities and WTM-related entities are minimised. The various options introduced here outline alternative routes to achieve this goal while optimising different sets of PISN-internal procedures and imposing different requirements on PISN entities. Based on this analysis, specific choices to be implemented in the PPM standards were proposed.

8 Numbering, addressing and routeing

8.1 General principles

The general principles of PISN addressing are described in ISO/IEC 11571 and these should also apply to PISNs which provide PPM and WTM. Though the scope of ISO/IEC 11571 does not exclude PISNs providing PPM and WTM, such features are not specifically considered either. Therefore, it is shown how ISO/IEC 11571 can be applied to PISNs providing PPM and WTM, and certain new aspects of addressing and numbering which are not covered in ISO/IEC 11571 are also identified.

Ideally the PISN numbering plan (PISN NP) should not be technology dependant, but should be of a generic nature. Therefore numbering for PPM should be independent of the type of terminal (wired or wireless) used and numbering for WTM should be independent of the wireless technology.

As indicated in the ISO/IEC 11571 the authority of the private telecommunications network may use:

- the ISDN Numbering Plan according to CCITT Recommendation E.164 ; or
- a Private Numbering Plan; or
- an Implicit Numbering Plan; or
- any combination of these numbering plans,

as the native numbering plan in its PISN. These possibilities should be retained with the introduction of WTM and PPM.

Copyright International Organization for Standardization
Provided by IHS under license with ISO
No reproduction or networking permitted without license from IHS Not for Resale

8.1.1 Addresses in non-ISDN telecommunication networks (not supporting mobility)

Non-ISDN telecommunication networks are usually dedicated networks providing single connections and, from an addressing point of view, there is a 1:1 relationship between the physical access of the PABX (point of access) and the terminal and thus between the user and the terminal (see Figure 15). Typically the addresses consist of decimal digits only, thus making addressing a question of numbering plans. Each user has his own Dialling Number (DN) which may be listed in a telephone directory. This DN is used by the other users for initiating calls and other services towards a particular user. In order to determine the routeing of the call and to control access to special services, etc. a conversion of a PISN number might be necessary.

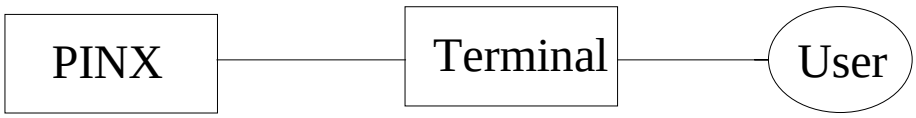

Figure 15 — Addresses in non-ISDN telecommunication networks (not supporting mobility)

The main characteristics of non-ISDN telecommunication networks are:

- the terminals are static (i.e. always connected to the same physical port in the exchange);
- the terminals normally do not have their own identity;
- it is actually the physical access of the PINX which is addressed (i.e. there is a fixed relationship between the terminal and the PINX access);
- a call normally follows a predetermined path through the network.

Owing to the static nature of such networks, the procedures for establishing calls (number analysis, routeing, etc.) are simple and it is fairly easy to plan the network architecture and routeing algorithms because the terminals are always found at the same location. Furthermore, the DN is used by the PINXs to determine the routeing through the network.

8.1.2 Access arrangement in public and private ISDNs

The ISDN (both public and private) allows accesses to be assigned more than one number. In addition the basic access allows a maximum of eight terminals to be attached simultaneously. In order to support the various arrangements of terminals and numbers at the network access, two supplementary services are applicable. They are:

- Direct Dialling In (DDI);
- Multiple Subscriber Number (MSN),

and they are briefly described below.

8.1.2.1 DDI

The supplementary service DDI, (CCITT Rec. I.251.1 and CCITT Rec. Q.81.1), is applicable to both basic and primary accesses and only for incoming calls to a PISN. The DDI public network supplementary service enables a user to call direct a user on a PISN by use of a public ISDN numbering plan. The public ISDN achieves this by sending all or part of the destination ISDN number to the PISN.

In principle this service can also be applied to the terminal access of a private network, but at this time no standards are under development.

Copyright International Organization for Standardization
Provided by IHS under license with ISO
No reproduction or networking permitted without license from IHS Not for Resale

8.1.2.2 MSN

The supplementary service Multiple Subscriber Number (MSN), (CCITT Rec. I.251.2 and CCITT Rec. Q.81.2) is applicable to both basic and primary accesses and for both incoming and outgoing calls. This service is explicitly defined for the public ISDN (see the references above). For a PISN, the procedures are included in the basic service specification ISO/IEC 11574. The service allows multiple numbers to be assigned to the access such that each number has its own subscription profile.

For outgoing calls it is a requirement that the network user provides a user identification number (origination number). This number may be the whole or part of the ISDN number, a PISN number or a number that is specific to the access. The network can verify that the number provided is one of the numbers assigned to the access.

For incoming calls, the network (public or private) will provide a destination number that identifies the called user. The number provided by the network may be the whole or part of the ISDN number, a PISN number or a number specific to the access.

8.1.3 Addresses in PISNs supporting WTM

In networks supporting mobility via radio access systems, the correlation between the physical access in the PINX and the terminal and the user is no longer fixed , as shown in Figure 16. This figure also shows that the addressing mechanism needs to be enhanced in order to cater for one or more of the following situations related to the radio parts:

- more than one PPM user may be logged on at the same terminal simultaneously
- one RE/RBS can serve several WTs;
- a PINX can serve more than one RE/RBS;
- depending on how a specific RE/RBS is connected to a PINX , there may be many links between the two. The PISN addressing mechanism should be designed such that the PINX can determine which RE/RBS to use for a specific call. However, the PISN addresses should not include any supplementary information for the selection of the physical link or timeslot between the PINX and RE/RBS.

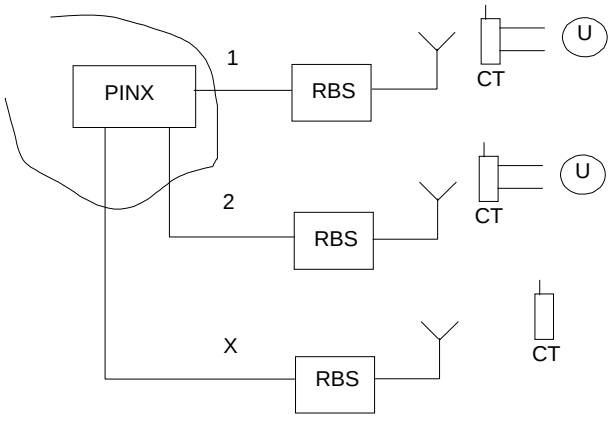

Figure 16 — PISN supporting mobility

Copyright International Organization for Standardization
Provided by IHS under license with ISO
No reproduction or networking permitted without license from IHS
Not for Resale

The following functional requirements may also have an impact on the addressing and routeing mechanisms of the PISN:

- any PPM user may log-on at a terminal anywhere in the network;
- a WT may appear at any RE/RBS at any time. This is also possible during an active call, i.e. the WT's address changes and is not fixed to a particular geographical location;
- it is most likely that mobility will be implemented gradually in existing PISNs. From the network operator point of view, it may not be acceptable to totally rearrange or even change the existing PISN NP in order to provide this feature. This implies that a DN will be given to a WT as if it was a normal wired terminal of that PINX and therefore calls to this WT will be initiated by dialling its DN;
- as the WT moves around in the network. the PISN number derived from the DN no longer reflects its current physical location. Therefore, unlike a call to a wired terminal, the routeing of a call to a WT cannot be decided entirely by the analysis of the dialled number. However, the PISN number should point to the PINX where further information about the current location of the WT can be found. Therefore each call initiated in a PINX to the same WT may follow a different route through the PISN .

The content of the PISN number is indicated in ISO/IEC 11571 subclause 6.1. In order to ease the reading of this Technical Report, the relevant parts of this subclause have been copied into this Technical Report.

Number information can be presented in two formats, the explicit and the implicit format. In both formats the number digits shall be accompanied by a Type of Number (TON) value, in accordance with Table 1.

Table 1 — TON values for the E.164, PNP and Unknown NP indications

	Explicit Format	Explicit Format	Implicit Format
NPI	**E.164**	**PNP**	**UNKNOWN**
TON	International Number	Level 2 Regional Number	
	National Number	Level 1 Regional Number	
	Subscriber Number	Level 0 Regional Number	
		(Local Number)	
	Partial Number (Note 1)	Partial Number (Note 1)	
	Unknown (Note 1)	Unknown (Note 1)	Unknown (Note 2)
		PISN specific Number (Note 3)	
		Abbreviated Number (Note 3)	

NOTES 1 In the standard on DSS1 of public ISDNs the TON values "Unknown" and "Partial" share the same code points. Distinction is made by the direction of the number information flows.

At the boundary between the public ISDN and a PINX the meaning for Selection Numbers is "Unknown" if the information flow is to the public ISDN, and the meaning is "Partial" if the information flow is from the public ISDN (i.e. in the context of DDI). For Identification Numbers the meanings are reversed.

At the boundary between the PISN and its terminals the meaning for Selection Numbers is "Partial" if the information flow is from the PISN to the terminal (i.e. in the context of MSN), and the meaning is "Unknown" if the information flow is from the terminal to the PINX. For Identification Numbers the meaning is reversed.

Copyright International Organization for Standardization
Provided by IHS under license with ISO
No reproduction or networking permitted without license from IHS Not for Resale

2 The number digits follow an implicit numbering plan and can include prefixes.

3 The use of this type of number is under the control of the PISN Administrator and the application is outside the scope of this standard.

In the explicit format the numbering plan indicator (NPI) shall have a value other than " Unknown ". The TON shall be set to either " Unknown " or to any of the other values specified for the NPI concerned. Except where the TON is set to " Unknown ", the number digits shall not include prefixes.

In the implicit format the NPI shall have the value " Unknown ". The TON shall only take the value " Unknown ". If applicable, the number digits shall include prefixes, according to the implicit numbering plan employed.

8.2 User and network operator requirements

The WTM and PPM services should not impose any additional restrictions upon the numbering and addressing schemes of the PISN. The PISN extension user should have the possibility of retaining his or her extension number when changing between wired, WTM and PPM services. There should consequently be no need to allocate specific number series or prefixes for the WTM and PPM users and the related network entities. This should however not prevent a private network operator from arranging the PISN NP in such a way that WTM and PPM users are indicated by either a prefix or specific number series.

For the PPM service the possibility of registering several PPM users on one (wireless or wired) terminal should be allowed.

8.3 WTM numbering and addressing

8.3.1 General

The new entities required to support WTM are as follows:

- the wireless terminal (WT);
- the home data base (HDB);
- the visitor data base (VDB);
- the radio exchange/radio base station (RE/RBS).

The purpose of the PISN NP is to make it possible to assign an unambiguous identity (i.e. address) to each of the entities which need to inter-communicate.

NOTE It is not always necessary for communicating entities to have PISN numbers. For example an RE/RBS does not need a PISN number if its PINX uses internal addressing mechanisms to associate WTs with RE/RBSs. However, for some applications it might be necessary to assign a PISN number to a functional entity which is contained within an RE/RBS, e.g. an authentication entity. In such cases the RE/RBS could be considered to have a PISN number.

It is, however, very likely that some additional information needs to be sent across the interface between the RE/RBS and the PINX . This additional information will only be used by the RE/RBS and as such is irrelevant to the PINX . However, the PISN may be required to store, retrieve and transport the information.

Basically two methods for addressing WTs beyond the PINX access point are foreseen.

Copyright International Organization for Standardization
Provided by IHS under license with ISO
No reproduction or networking permitted without license from IHS Not for Resale

Firstly the WT's number can be sent over the interface between the RE/RBS and the PINX . This requires, however, that the radio parts (or the handsets) contain some sort of analysing function and a local data base which can relate the WT's number to the local radio identity. In this case the RE/RBS can be considered similar to a PINX from an addressing point of view (but not concerning the switching function). This method requires that both the WT's number and the PINX access address are sent via the network.

Another method is to terminate the call to the WT at the RE/RBS's access point in the PINX and then to send the additional radio information across the PINX -RE/RBS interface. This method does not require an analysing functionality in the RE/RBS, but does require the radio addresses to be sent over the PISN.

For both methods the WT's number is part of the PISN NP, but it will be necessary to develop functions which can associate the PISN number derived from the DN to the PISN number of the WT's current access.

8.3.2 Contents of the number digits in the PISN NP

The WT's PISN number should comprise a sequence of decimal digits as specified in ISO/IEC 11571. Addressing of WTs should not make use of sub-addressing.

8.3.3 Structure of PISN NP

ISO/IEC 11571 allows a PISN NP to be hierarchically organised into regions by use of TON values (See Table 1). It is for further study to identify how ISO/IEC 11571 can be used to identify the WTM entities (WT, HDB, VDB and RE/RBS), e.g. by the use of TON values.

8.4 PPM numbering and addressing

The PPM number should comprise a sequence of decimal digits as specified in ISO/IEC 11571.

The following items have been identified as requiring further study:

- the entities needed for PPM in a PISN should be identified in order to see which of them need to have a PISN number;
- the PPM number shall be a number of the PISN NP. No special number series or prefixes should be required for PPM;
- the relation between the numbering of WTM and PPM should be investigated (i.e. similarities and differences should be identified);
- possible service interactions for PPM should be investigated (e.g. diversion).

8.5 Routeing

8.5.1 General principles

The general routeing principles of calls to user and terminals that are mobile are based on the routeing principles described for PISN fixed terminals . However, these principles do not cover special mobility aspects. For this reason, new concepts need to be introduced, such as the registration feature of the users and terminal as well as the location registration of the mobile terminals.

The routeing processes of mobility management use the concept of Home Data Bases and Visitor Data Bases for the storage of location information of users and terminals.

Copyright International Organization for Standardization
Provided by IHS under license with ISO
No reproduction or networking permitted without license from IHS Not for Resale

For the management of terminal mobility, the radio accesses of the PISN are grouped into Location Areas (LAs). A location area is a domain in which a WT may receive and/or make calls as a result of a single location registration by changing the location area. In a location area a WT can be searched for so that it can be informed of an incoming service, e.g. an incoming call. Several location areas may be combined into a Visitor Area (VA). A visitor area is related to a Visitor Data Base (VDB) which contains some information items (e.g. identity, access rights) of the WTs which are situated in this area, and the identity of the location area in which the WTs have to be searched for. The concept of VDB can also be used for user mobility.

The concept of Home Data Base (HDB) is used for both user and terminal mobility. An HDB contains the complete information set of all the terminals or the users belonging to this HDB (e.g. access rights, service profile etc.). The HDB also contains the current location of the users (e.g. the identity of the WTs on which the users are registered or the access addresses of the users) and the current location of the WTs (e.g. the access address or the identity of the VDB corresponding to the visitor area in which the WTs are located).

PISN routeing mechanisms should include the routeing of the call-related information as well as the routeing of the call-independent information, such as the registration of the users on a WT and location registration messages of the WTs.

8.5.2 Data Bases

If an update of the visiting WT's HDB is necessary, or the HDB needs to be accessed, then the WT shall provide its DN or any suitable identity that clearly identifies its HDB to the visited PINX VDB. The visited PINX should then establish a connection with the exchange that has access to the HDB. The updating procedures of the HDB and VDB itself are outside the scope of this Technical Report.

8.5.3 Example of routeing processes

8.5.3.1 Routeing of call-independent information

The registration of a user on a terminal, is activated by the user. The registration information is sent by the terminal to the corresponding HDB (and if necessary to the corresponding VDB). This requires that the network is able to determine the address of the HDB of a user by means of the user's PISN number.

For location registration of a WT, the WT sends the location registration information either automatically or by a manual action by the user of the terminal. This information is sent at first to the VDB corresponding to the area in which the terminal is located. If the terminal is not already registered in this VDB the location registration information must also be sent to the corresponding HDB. This process requires that the network is able to find the address of the HDB of a terminal by means of the terminal's PISN number.

8.5.3.2 Routeing of calls and call-related information

A user initiates a call towards another user by dialling the DN of this user. The terminal or the network analyses the DN and transforms it into the corresponding PISN number.

For an incoming call to a user, the network has at first to locate the terminal on which the called user is registered. The location enquiry may begin in the VDB corresponding to the network access from which the setup message accesses to the PISN. If the enquiry to the VDB is unsuccessful, the enquiry is sent to the HDB corresponding to the called user. If the called user is registered on a wired terminal, the usual routeing process is applied. For an incoming call to a WT, the WT has to be located by using the location information stored in the VDB and HDB. This process requires the network to be able to determine the address of the HDB of the user and the terminal from the PISN number of the user and of the terminal.

Two methods of routeing to WTs and PPM users have been identified: the rerouteing method and the forward switching method.

Copyright International Organization for Standardization
Provided by IHS under license with ISO
No reproduction or networking permitted without license from IHS Not for Resale

In the rerouteing method the network will perform a new routeing from the calling party to the destination after the current location has been retrieved from the HDB.

In the forward switching method the network's routeing algorithm joins the incoming call (at the PINX containing the HDB) to an outgoing call path to the destination PINX .

The rerouteing method seems to be more suitable for situations where a large number of WTs and PPM users are not located at their home PINX

9 Future standardisation

Items for further standardisation should at least be:

- Location registration procedures;
- Procedures for handling of incoming calls to mobile terminals;
- Prosedures for handling of calls from mobile terminals;
- Access sequrity (e.g., Authentication and User Identification.

These procedures should be described in the stage 1,2 and 3 methodology as far as applicable for supplementary services and Additional Network Features (ANF).

The impact of mobility on other issues e.g., Numbering and Addressing should also be studied.

--`,,```,,,,````-`-`,,`,,`,`,,`---

Copyright International Organization for Standardization
Provided by IHS under license with ISO
No reproduction or networking permitted without license from IHS Not for Resale

© ISO/IEC

ICS 33.040.35

Price based on 49 pages

Copyright International Organization for Standardization
Provided by IHS under license with ISO
No reproduction or networking permitted without license from IHS

Not for Resale