TECHNICAL REPORT

ISO/IEC TR 14475

Second edition
2001-07-01

Information technology — Telecommunications and information exchange between systems — Private Integrated Services Network — Architecture and scenarios for Private Integrated Services Networking

Technologies de l'information — Télécommunications et échange d'information entre systèmes — Réseau privé à intégration de services — Architecture et scénarios pour réseau privé à intégration de services

Reference number
ISO/IEC TR 14475:2001(E)

© ISO/IEC 2001

--`,,```,,,,````-`-`,,`,,`,`,,`---

Copyright International Organization for Standardization
Provided by IHS under license with ISO
No reproduction or networking permitted without license from IHS

Not for Resale

PDF disclaimer

This PDF file may contain embedded typefaces. In accordance with Adobe's licensing policy, this file may be printed or viewed but shall not be edited unless the typefaces which are embedded are licensed to and installed on the computer performing the editing. In downloading this file, parties accept therein the responsibility of not infringing Adobe's licensing policy. The ISO Central Secretariat accepts no liability in this area.

Adobe is a trademark of Adobe Systems Incorporated.

Details of the software products used to create this PDF file can be found in the General Info relative to the file; the PDF-creation parameters were optimized for printing. Every care has been taken to ensure that the file is suitable for use by ISO member bodies. In the unlikely event that a problem relating to it is found, please inform the Central Secretariat at the address given below.

© ISO/IEC 2001

All rights reserved. Unless otherwise specified, no part of this publication may be reproduced or utilized in any form or by any means, electronic or mechanical, including photocopying and microfilm, without permission in writing from either ISO at the address below or ISO's member body in the country of the requester.

ISO copyright office
Case postale 56 • CH-1211 Geneva 20
Tel. + 41 22 749 01 11
Fax + 41 22 749 09 47
E-mail copyright@iso.ch
Web www.iso.ch

Printed in Switzerland

© ISO/IEC 2001 – All rights reserved
Copyright International Organization for Standardization
Provided by IHS under license with ISO
No reproduction or networking permitted without license from IHS
Not for Resale

Contents

		Page
1	Scope	1
2	References	1
3	Terms and definitions	1
3.1	External Definitions	2
3.2	Special Definitions	2
4	Symbols and Abbreviations	4
5	Introduction	5
5.1	PINX Reference Configuration	5
5.2	Additional Descriptions	6
5.2.1	Inter-PINX Connection (IPC)	6
5.2.2	Inter-PINX Link (IPL)	6
5.2.3	Relationship between IPLs and IPCs	7
6	Details of the Functional Groupings as Relevant for Scenario Handling	7
6.1	Mapping Unit (MP)	7
6.1.1	Physical Adaptation	8
6.1.2	Mapping Matrix	8
6.2	Inter-PINX Connection Control (ICC)	9
6.2.1	IPC Control	9
6.2.2	IPL Control	9
6.3	Scenario Management	9
6.3.1	Link Resource Management	10
6.3.2	Mapping Management	10
6.3.3	IPC Management	10
6.4	Complete PINX Model	10
7	Configuration Variants	11
7.1	PINX with Multiple IPLs	11
7.2	More than One Type of IVN	12
7.3	Different Spread of IPCs among the Interfaces at the Two PINXs	12
8	IPL Establishment and administration procedures	13
8.1	IPL Establishment using ScenSIG	13
8.1.1	Static Pre-Conditions	14
8.1.2	Establishment of a First IPC	14
8.1.3	IPL Initialisation Process	14

© ISO/IEC 2001 – All rights reserved

Copyright International Organization for Standardization
Provided by IHS under license with ISO
No reproduction or networking permitted without license from IHS
Not for Resale

8.1.4	Establishment of the D_Q-Channel	15
8.1.5	Establishment of U_Q-Channels	15
8.1.6	Channel Mapping	15
8.2	IPL Establishment Procedures without using ScenSIG	16
8.3	IPL Administration Procedures	16
9	Items for Future Standardisation	16
9.1	Mapping Function	17
9.1.1	Physical Adoption	17
9.1.2	Mapping Matrix	17
9.1.3	Static Pre-Conditions	17
9.2	ScenSIG	17
9.2.1	IPL Establishment and Administration Procedures	17
9.2.2	Bearer Modification Procedures	18
9.3	Bearer Conditioning	18
10	Scenarios	18
10.1	Scenarios: Dedicated Transmission Systems	18
10.1.1	Scenario 1.1 - Unstructured Transmission Link	18
10.1.2	Scenario 1.2 - Structured Transmission Link	19
10.2	Scenarios: Semi-Permanent IVN Connections	19
10.2.1	Scenario 2.1 - Semi-permanent Circuit Switched	19
10.2.2	Scenario 2.2 - Permanent Virtual Call	20
10.3	Scenarios: On-Demand Public Network Connections	21
10.3.1	Scenario 3.1 - On-demand Circuit Switched	21
10.3.2	Scenario 3.2 - ISDN Call with User-to-User Signalling	21
10.3.3	Scenario 3.3 - On Demand Virtual Call	22
10.4	Scenarios: Virtual Private Network	23
10.4.1	Introduction	23
10.4.2	Access Arrangements	23
10.4.3	Scenario 4.1 -Transit PINX	26
10.4.2	Scenario 4.2 -Centrex	26
10.4.3	Scenario 4.3 -Gateway to another network	27
Annexes		
A - Attribute Values		28
B - Scenario 4.4 - Relay Node		30

© ISO/IEC 2001 – All rights reserved
Copyright International Organization for Standardization
Provided by IHS under license with ISO
No reproduction or networking permitted without license from IHS
Not for Resale

Foreword

ISO (the International Organization for Standardization) and IEC (the International Electrotechnical Commission) form the specialized system for worldwide standardization. National bodies that are members of ISO or IEC participate in the development of International Standards through technical committees established by the respective organization to deal with particular fields of technical activity. ISO and IEC technical committees collaborate in fields of mutual interest. Other international organizations, governmental and non-governmental, in liaison with ISO and IEC, also take part in the work.

In the field of information technology, ISO and IEC have established a joint technical committee, ISO/IEC JTC 1.

The main task of technical committees is to prepare International Standards, but in exceptional circumstances a technical committee may propose the publication of a Technical Report of one of the following types:

— type 1, when the required support cannot be obtained for the publication of an International Standard, despite repeated efforts;

— type 2, when the subject is still under technical development or where for any other reason there is the future but not immediate possibility of an agreement on an International Standard;

— type 3, when a technical committee has collected data of a different kind from that which is normally published as an International Standard ("state of the art", for example).

Technical Reports of types 1 and 2 are subject to review within three years of publication, to decide whether they can be transformed into International Standards. Technical Reports of type 3 do not necessarily have to be reviewed until the data they provide are considered to be no longer valid or useful.

Technical Reports are drafted in accordance with the rules given in the ISO/IEC Directives, Part 3.

Attention is drawn to the possibility that some of the elements of this Technical Report may be the subject of patent rights. ISO and IEC shall not be held responsible for identifying any or all such patent rights.

ISO/IEC TR 14475, which is a Technical Report of type 3, was prepared by Joint Technical Committee ISO/IEC JTC 1, *Information technology,* Subcommitee SC 6, *Telecommunications and information exchange between systems*.

This second edition cancels and replaces the first edition (ISO/IEC TR 14475:1996), which has been technically revised.

© ISO/IEC 2001 – All rights reserved

Copyright International Organization for Standardization
Provided by IHS under license with ISO
No reproduction or networking permitted without license from IHS
Not for Resale

Information technology — Telecommunications and information exchange between systems — Private Integrated Services Network — Architecture and scenarios for Private Integrated Services Networking

1 Scope

A Private Integrated Service Network (PISN) is a network comprising either one PINX or more than one PINX interconnected by Inter-PINX connections. This Technical Report is concerned with inter-PINX connections (IPC) that are provided by Intervening Networks (IVN), and the way in which these are handled by PINXs to provide a platform for inter-PINX communication. Different types of IVNs can be used to provide IPCs, in accordance with the scenarios indicated in ISO/IEC 11579-1. These are Overlay Scenarios in that they enable the services of the PISN to operate transparently across an IVN.

Connected PINXs need to co-ordinate their use of IVNs, and appropriate standardisation is needed to allow networks to be created employing PINXs and IVNs from multiple vendors. The following points need to be considered:

— In general but depending on the type of IVN, procedures and signalling protocols between the PINXs are needed for the establishment, maintenance and release of IPCs. Appropriate standardisation of these procedures and signalling protocols is necessary.

— At the Q reference point (a conceptual point within a PINX) channels and PISN call control signalling (QSIG) are defined independently of the type of IVN. However, at the C reference point (where the PINX is connected to the IVN), the representation of the channels and of signalling is dependent on the type of IVN, and on how the PINXs use the IPCs. Appropriate standardisation of these aspects at the C reference point is necessary.

— In general the relationship between a channel at the Q reference point and its representation at the C reference point is not static, and procedures and signalling between the PINXs are needed for the co-ordination of these relationships. Appropriate standardisation of these procedures and signalling is necessary.

— Appropriate mechanisms need to be standardised for conveying inter-PINX signalling through the IVN. These will depend on the characteristics of the IPC used.

The aim of this Technical Report is to identify:

1. In addition to PISN call control signalling (QSIG), what needs to be standardised, in order to be able to inter-connect PINXs;
2. General techniques, procedures, protocols etc., that apply to of all (or at least very many) types of IVNs.

2 References

ISO/IEC 7776:1995, *Information technology — Telecommunications and information exchange between systems — High-level data link control procedures — Description of the X.25 LAPB-compatible DTE data link procedures*

ISO/IEC 11572:2000, *Information technology — Telecommunications and information exchange between systems — Private Integrated Services Network — Circuit mode bearer services — Inter-exchange signalling procedures and protocol*

© ISO/IEC 2001 — All rights reserved

Copyright International Organization for Standardization
Provided by IHS under license with ISO
No reproduction or networking permitted without license from IHS
Not for Resale

ISO/IEC 11574:2000, *Information technology — Telecommunications and information exchange between systems — Private Integrated Services Network — Circuit-mode 64 kbit/s bearer services — Service description, functional capabilities and information flows*

ISO/IEC 11579-1:1994, *Information technology — Telecommunications and information exchange between systems — Private integrated services network — Part 1: Reference configuration for PISN Exchanges (PINX)*

ISO/IEC 11582:1995, *Information technology — Telecommunications and information exchange between systems — Private Integrated Services Network — Generic functional protocol for the support of supplementary services — Inter-exchange signalling procedures and protocol*

ITU-T Rec. I.140 (1993), *Attribute technique for the characterization of telecommunication services supported by an ISDN and network capabilities of an ISDN*

ITU-T Rec. I.112 (1993), *Vocabulary of terms for ISDNs*

ITU-T Rec. I.130 (1988), *Method for the characterization of telecommunication services supported by an ISDN and network capabilities of an ISDN*

ITU-T Rec. I.210 (1993), *Principles of telecommunication services supported by an ISDN and the means to describe them*

ITU-T Rec. I.411 (1993), *ISDN user-network interfaces — Reference configurations*

ITU-T Rec. I.430 (1995), *Basic user-network interface — Layer 1 specification*

ITU-T Rec. X.31 (1995), *Support of packet mode terminal equipment by an ISDN*

3 Terms and definitions

For the purposes of this Technical Report the following terms and definitions apply.

3.1 External Definitions

This Technical Report uses the following terms defined in other documents:

- Basic Service (ITU-T Rec. I.210)
- Private Integrated Services Network (PISN) (ISO/IEC 11579-1)
- Private Integrated Services Network Exchange (PINX) (ISO/IEC 11579-1)
- Service (ITU-T Rec. I.112)
- Signalling (ITU-T Rec. I.112)
- Supplementary Service (ITU-T Rec. I.210)
- Supplementary Service Control Entity (ISO/IEC 11582)
- Terminating PINX (ISO/IEC 11572)
- Transit PINX (ISO/IEC 11572)
- User (ISO/IEC 11574)

3.2 Special Definitions

Attached PINX: A PINX that is attached to a VPN and capable of using VPN services.

NOTE – In the context of a call, the attached PINX can be an end-PINX (i.e. serving the originating or destination user or acting as a gateway with another network) or it can be a transit-PINX.

© ISO/IEC 2001 – All rights reserved
Copyright International Organization for Standardization
Provided by IHS under license with ISO
No reproduction or networking permitted without license from IHS
Not for Resale

Centrex: That part of a VPN that emulates an End-PINX.

Channel: A means of bi-directional transmission of user or signalling information between two points.

D_C-Channel: A channel used to convey IPC control information, at the C reference point, between a PINX and an IVN.

NOTE - This does not preclude the conveyance of other types of information.

D_Q-Channel: A channel used to convey call control information between the Q reference points of two peer PINXs.

NOTE - Call control information can include information for the control of basic services, supplementary services, additional network features, etc.

IPL-Service-Channel (IS-Channel): A channel used to convey information related to the management of scenarios between the two peer PINXs.

NOTE - This channel conveys ScenSIG. The use for other applications is outside the scope of this Technical Report.

U_Q-Channel: A channel used to convey user information between the Q reference points of two PINXs.

Corporate Telecommunication Network (CN): A **CN** consists of a set of equipment (Customer Premises Equipment and/or Customer Premises Network) that are located at geographically dispersed locations and are interconnected to provide networking services to a defined group of users.

NOTE - The ownership of the equipment is not relevant to this definition.

NOTE - In this Technical Report, even equipment that is not geographically dispersed (e.g., a single PBX or a Centrex providing service to users at a single location) may form a CN.

Interconnecting Network (ICN): The emulation of transit-PINX functionality by equipment that is physically part of the public network infrastructure. In addition, it includes one or more IVNs and may include the emulation of gateway-PINX functionality.

Inter-PINX Connection (IPC): A connection provided by an IVN between two C reference points used to transport inter-PINX information from the PISN control plane and/or the PISN user plane.

Inter-PINX Link (IPL): A link between the Q reference points of two PINXs, comprising the totality of signalling transfer and user information transfer means.

Relay Node (functionality): Within the context of a call the functionality that distinguishes calls between users in the Corporate Network, and relays such calls to designated PINX functionality emulated by public network equipment, or to an attached PINX. This may be via other relay nodes.

NOTE - Relay Node functionality includes transparent handling of private networking information (e.g. transit counter).

Signalling Functions

CSIG: The generic term describing access signalling information flows (i.e. not a specific signalling protocol) between a PINX and an IVN, at the C reference point.

QSIG: The generic term describing the signalling information flows (i.e. not a specific signalling protocol), within a D_Q-channel.

TSIG: The generic term describing signalling information flows (i.e. not a specific signalling protocol) for interworking between a PINX and the public ISDN (which occurs at the T reference point).

ScenSIG: The generic term describing the signalling information flows (i.e. not a specific signalling protocol) that support the handling of the specific scenario employed between the two interconnected PINXs.

© ISO/IEC 2001 - All rights reserved

Copyright International Organization for Standardization
Provided by IHS under license with ISO
No reproduction or networking permitted without license from IHS
Not for Resale

Scenario: A particular type of IPC provided by a particular type of IVN.

Semi-permanent connection: A connection in a switched network established by the network operator.

Virtual Private Network (VPN): Is that part of a CN that provides corporate networking using shared switched resources from a third party provider (e.g. a public network).

4 Symbols and Abbreviations

ACP	Availability Check Procedure
C	C reference point
C_i	Instance i of a C reference point
Ch	Channel
CC	Call Control functional grouping
CLIP	Calling Line Identification Presentation
CM	Circuit Mode
COLP	Connected Line Identification Presentation
CSIG	SIGnalling information flows at the C reference point
CUG	Closed User Group
DDI	Direct Dial In
HLC	High Layer Compatibility
ICC	Inter-PINX Connection (IPC) Control functional grouping
Id	Identity
IFC	InterFaCe
IPC	Inter-PINX Connection
IPL	Inter-PINX Link
IS	IPL Service
IVN	InterVening Network
LLC	Low Layer Compatibility
MC	Mapping Control
MP	MaPping functional grouping
NP	Numbering Plan
PSPDN	Packet Switched Public Data Network
PISN	Private Integrated Service Network
PINX	Private Integrated Network EXchange
PM	Packet Mode
Q	Q reference point

© ISO/IEC 2001 – All rights reserved
Copyright International Organization for Standardization
Provided by IHS under license with ISO
No reproduction or networking permitted without license from IHS
Not for Resale

Q_i	Instance i of a Q reference point
QSIG	SIGnalling information flows at the Q reference point
ScenSIG	Scenario SIGnalling information flows
SS #7	Signalling System No. 7
SW	SWitching functional grouping
T	T reference point
TSIG	SIGnalling information flows at the T reference point

5 Introduction

Some general mapping functions are listed in the reference configuration for PINXs, defined in ISO/IEC 11579-1. Further definitions are required to understand the co-operation of functions in a PINX, to derive from them a subset, which needs to be standardised.

Subclause 5.1 provides an excerpt from those functions mentioned in ISO/IEC 11579-1, which are relevant to this document. Subclause 5.2 and its subclauses describe refinements of these functions and some additions necessary for understanding the overall context.

5.1 PINX Reference Configuration

Figure 1 shows an excerpt from the PINX reference configuration as described in ISO/IEC 11579-1.

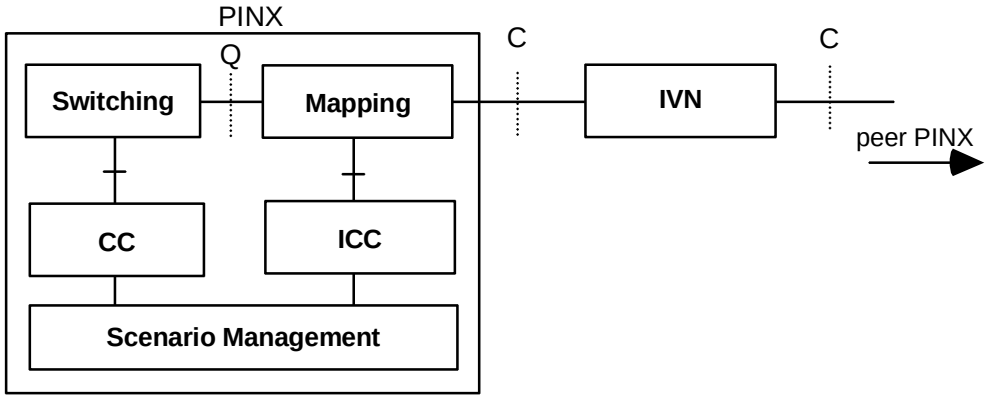

Figure 1 - PINX Reference Configuration (Excerpt)

Depending on the topology of a particular PISN, a PINX may in practice have links with several other PINXs and may also have more than one link with the same PINX, i.e. more than one inter-PINX link may be present on a particular PINX. A PINX will then have an instance of the Q reference point (Q_1 ... Q_n) for each IPL. This is not shown in Figure 1 (and also not in subsequent figures).

For the purpose of this Technical Report, the key aspects derived from ISO/IEC 11579-1 are:

— Mapping Functional Grouping (MP)
The MP provides the functions which are necessary to adapt to physical, electrical and procedural conditions of the interface between the PINX and the IVN. MP also provides the multiplexing functions which are required to separate or merge the information flows to or from SW from or to the user plane of the IVN, and between ICC and the control plane of the IVN.

© ISO/IEC 2001 - All rights reserved

Copyright International Organization for Standardization
Provided by IHS under license with ISO
No reproduction or networking permitted without license from IHS
Not for Resale

— Switching Functional Grouping (SW)
The SW provides the switching functions for user and signalling information. Signalling information is switched between the CC and MP.

— Call Control Functional Grouping (CC)
The CC provides the functions which are necessary to control the call and the connection through a PISN.

— Inter-PINX Connection Control Functional Grouping (ICC)
This functional grouping provides the functions which are necessary to control the inter-PINX connection (IPC) through the intervening network.

— Scenario Management Functional Grouping
Scenario Management coordinates the provision and use of IPCs by:

— using the services of ICC to establish and release IPCs;

— using the services of ICC to liaise with the Scenario Management of the peer PINX to agree on the use of IPCs;

— instructing MP to map D_Q-channels and U_Q-channels onto IPCs and provide any required Bearer Conditioning.

5.2 Additional Descriptions

To apply a reference configuration to real implementations, distinction must be made between characteristics present at the C reference point and characteristics present at the Q reference point. To facilitate this, the following concepts are introduced:

— Inter-PINX connection (IPC); and

— Inter-PINX link (IPL).

5.2.1 Inter-PINX Connection (IPC)

An IPC is described by the attributes of the bearer service that the IVN provides. An example attribute list is given in Annex A.

At each end an IPC is terminated at an interface at the C reference point.

NOTE 1- Bearer services providing connections that span over more than one interface are not specifically discussed by this document.

An interface can terminate multiple IPCs. Different IPCs terminating on the same interface can lead to the same peer PINX or to other peer PINXs. The number of IPCs available at an interface depends on the IVN services that the IPC uses and on the type of interface.

The types of interfaces can be different at both sides of the IVN. The IVN functionality can be provided by multiple physical networks, of the same or of different types (e.g. ISDN at one side and PSTN at the other side).

A PINX can have more than one interface at the C reference point.

NOTE 2 - Besides supporting the functionality specified for the C reference point, an interface can be used for other functionality, e.g. as specified for the T reference point (shared access use). Such use is outside the scope of this Technical Report.

5.2.2 Inter-PINX Link (IPL)

An IPL can be established between the Q reference points of two peer PINXs. More than one IPL may be established between the same pair of PINXs. In this case each IPL appears, at each PINX, at a separate instance of the Q reference point.

© ISO/IEC 2001 – All rights reserved
Copyright International Organization for Standardization
Provided by IHS under license with ISO
No reproduction or networking permitted without license from IHS
Not for Resale

An IPL consists of one or more channels. One of the channels (D_Q-channel) must be capable of conveying PISN call control information flows (QSIG).

Further channels (U_Q-channels), can be included into, or removed from, an IPL as required to satisfy current or anticipated network traffic.

To fully describe a channel of an IPL, the following information is used:

- the IPL identity (i.e. the instance of Q reference point);
- the channel identity (number);
- channel usage (User information, QSIG);
- the channel characteristics.

The way that IPCs are provided by the IVN may have impact on the performance and reliability of the IPL, and on the ability of the IVN to indicate failures to the adjacent PINXs.

5.2.2.1 IPL Identity

The IPL identity corresponds to the instance of the Q reference point. The IPL identity needs to be known to both PINXs prior to its establishment.

5.2.2.2 Channel Identity

The channel identity is expressed by a channel number that must be unique within the IPL.

5.2.2.3 Channel Usage

Channel usage indicates whether a given channel is used for user information transfer or for signalling purposes.

5.2.2.4 Channel Characteristics

The channel characteristics are expressed in terms of attributes, as described in Annex A.

NOTE - Channels of similar characteristics may be grouped, e.g. for routing purposes. This is outside the scope of this Technical Report.

5.2.3 Relationship between IPLs and IPCs

The IPL appears at the Q reference point in terms of channels, and each channel is carried by means of an IPC. An IPC can by further functions within the MP, e.g. the inclusion of multiplexing and de-multiplexing functions and/or splitting and merging functions, carry more or less than a channel of an IPL (see Mapping Matrix, 6.1.2).

6 Details of the Functional Groupings as Relevant for Scenario Handling

6.1 Mapping Unit (MP)

The MP (see Figure 2) conceptually contains two sub-functions:

- physical adaptation, and
- mapping matrix.

Some of the sub-functions may be NULL in a particular implementation.

Whereas Physical Adaptation contains interface-related functionality, with regard to the C reference point, the Mapping Matrix provides IPL-related functionality, with regard to the Q reference point.

Both functions are described below; they can contain further sub-functions.

--`,,```,,,,````-`-`,,`,,`,`,,`---
© ISO/IEC 2001 - All rights reserved

Copyright International Organization for Standardization
Provided by IHS under license with ISO
No reproduction or networking permitted without license from IHS
Not for Resale

6.1.1 Physical Adaptation

The interface oriented Physical Adaptation function provides for the physical termination of the IVN interface. This includes handling of the IVN-inherent management functions, e.g. as specified for timeslot 0 of a primary rate interface, bit and frame synchronisation, power feeding, etc.

If applicable, the D_C-channel is added to/extracted from the interface.

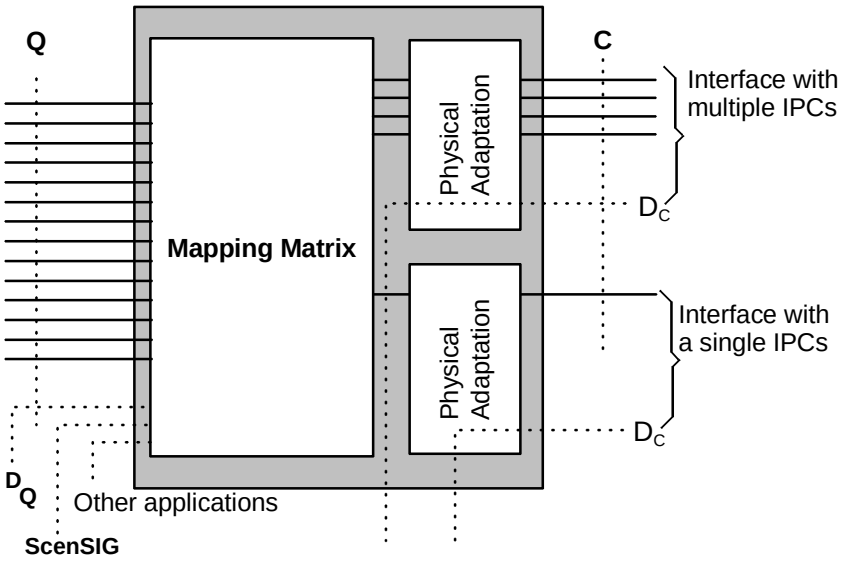

Figure 2 - Conceptual Infrastructure of the Mapping Functional Grouping

6.1.2 Mapping Matrix

This function provides for the mapping of channels at the Q reference point and of the IS-channel to the IPC(s) at the interface(s) at the C reference point (or the channels obtained from the structure of the link). This can include any multiplexing/de-multiplexing functions and/or splitting/merging functions. The Mapping Matrix is under the control of the Mapping Management function, see 6.3.2.

If the bearer capabilities of the channels differ from those provided by the IPCs via Physical Adaptation, Mapping Matrix will also provide Bearer Conditioning. Bearer conditioning is an optional function.

As a further option, the settings of Bearer Conditioning can be changed (Bearer Modification). If provided, Bearer Modification can modify any of the parameter values by which bearer capabilities are described, see Annex A. Examples are given in Table 1:

Table 1 - Examples of Attribute Changes

Attribute	Change from/to	Application for ....
Information Transfer Mode	circuit ↔ packet	Accommodation of ScenSIG and QSIG, or packetized user data
Symmetry;	unidirectional ↔	disabling echo cancellation for data transfer
Channel Rate	16 ↔ 32 ↔ 64 ↔ 128 ↔ etc. kbit/s	multiplexing/demultiplexing to obtain higher or lower bandwidth
Information Transfer Coding	code conversion	µ-law/A-law/ADPCM

The attribute parameters for which Bearer Conditioning is possible, and the ranges of their values, depend on the PINX implementation.

Copyright International Organization for Standardization
Provided by IHS under license with ISO
No reproduction or networking permitted without license from IHS
Not for Resale
© ISO/IEC 2001 – All rights reserved

6.2 Inter-PINX Connection Control (ICC)

The ICC provides control functions having either

— access significance, i.e. being relevant to the C reference point; or

— link significance, i.e. being relevant to the peer PINXs.

These are carried out by the sub-functions IPC Control and IPL Control respectively.

6.2.1 IPC Control

These functions control the connections at the C reference point, i.e. between the PINX and the IVN. The ICC communicates with the IVN control mechanism by means of the access signalling information flows as specified for that particular type of IVN.

CSIG is used as a generic name for designating these signalling information flows.

6.2.2 IPL Control

These functions are optional and provide a communication service to Scenario Management for interchanging IPL related information with its peer in the remote PINX. The IPL related information flow is called ScenSIG. If it is provided, it is conveyed over an IPL Service Channel (IS).

ScenSIG is separate from the PISN call control information flows (QSIG). The communication services provided by ScenSIG allow the following functions to be performed:

— confirmation that the establishment of the IPC for conveying ScenSIG was successful;

— identification of either PINX to its peer;

— authentication, possibly with password exchange or encryption;

— agreement on establishing and releasing additional IPCs for the same IPL;

— agreement on establishment of the D_Q-channel on the same or a different IPC and any Bearer Conditioning to be applied;

— assignment of U_Q-channel identities, including the establishment of Bearer Conditioning, if required to satisfy the required bearer capabilities.

Some of the functions listed above can also apply to an existing IPL (after the initialisation process), e.g. for adding or removing U_Q-channels or for changing their bearer capabilities.

6.3 Scenario Management

This function (see Figure 3) conceptually consists of three sub-functions, i.e.

— Link Resource Management;

— Mapping Management; and

— IPC Management.

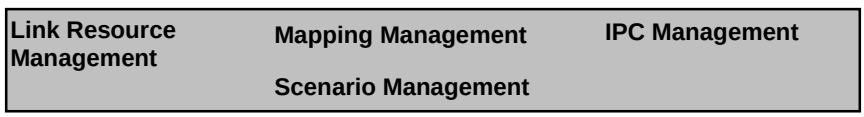

Figure 3 - Scenario Management

--`,,```,,,,````-`-`,,`,,`,`,,`---

© ISO/IEC 2001 - All rights reserved

Copyright International Organization for Standardization
Provided by IHS under license with ISO
No reproduction or networking permitted without license from IHS
Not for Resale

Scenario Management performs and co-ordinates the Link Resource Management, the Mapping Management and the IPC Management functions. Scenario Management evaluates requests for a new IPL or the enhancement of an existing IPL, and decides whether an additional IPC is to be established (IPC Management) or whether a suitable bearer capability can be obtained out of IPCs already available (Mapping Management).

The principal function of Scenario Management is to provide channels at the Q reference point so that CC can select them according to users' requests. How Scenario Management achieves this, is outside the scope of this document.

NOTE – Basically, channel provisioning can be achieved in a forecast way, in which Scenario Management knows in advance the peak hour traffic pattern, i.e. how many channels are required.

Alternatively, channel provisioning can be achieved in a spontaneous way, in which Scenario Management controls the provision of the channels on request of CC.

A more sophisticated procedure of Scenario Management could be to instruct CC to apply a look-ahead procedure, i.e. to check (via QSIG) whether the party on PINX B is actually available and free (e.g. does not have activated call diversion to another PINX, and is not busy). Scenario Management will only establish the additional IPC, if the outcome of the look-ahead procedure was positive. This procedure forms an addition to the basic Scenario Management functions and is outside the scope of this document.

6.3.1 Link Resource Management

Link Resource Management is required whenever a PINX needs to manage scenarios dynamically. It is responsible for ensuring the availability of an adequate number of channels with the required bearer capabilities at the Q reference point, including updating the related data base.

As a local function, Link Resource Management is not subject to standardisation.

6.3.2 Mapping Management

Mapping Management is a function with local significance at each end of the IPL. It is responsible for activating and deactivating the individual mapping functions, e.g. for obtaining bearer capabilities required for the channels at the Q reference point different from those available at the interface(s) at the C reference point.

Mapping Management also has mutual significance in being responsible for the end-to-end co-ordination of the settings of mapping functions at the peer PINXs. This requires information to be exchanged between their Scenario Management functional groupings. Such an exchange can be achieved manually or by signalling means. In the latter case, ICC will then have an IPL related control function, which provides a communication service to Scenario Management. The communication service is based on information flows between the two peer PINXs which generically are called ScenSIG. For the functions to be provided by the IPL related control function see 6.2.2.

6.3.3 IPC Management

IPC Management is responsible for setting up and releasing IPCs. This function applies to customer controllable IVN types only, e.g. a B-channel connection or a user-user-signalling connection through a public ISDN.

6.4 Complete PINX Model

Figure 4 shows the complete PINX model composed of all individual functional groupings.

--`,,```,,,,````-`-`,,`,,`,`,,`---

© ISO/IEC 2001 – All rights reserved
Copyright International Organization for Standardization
Provided by IHS under license with ISO
No reproduction or networking permitted without license from IHS
Not for Resale

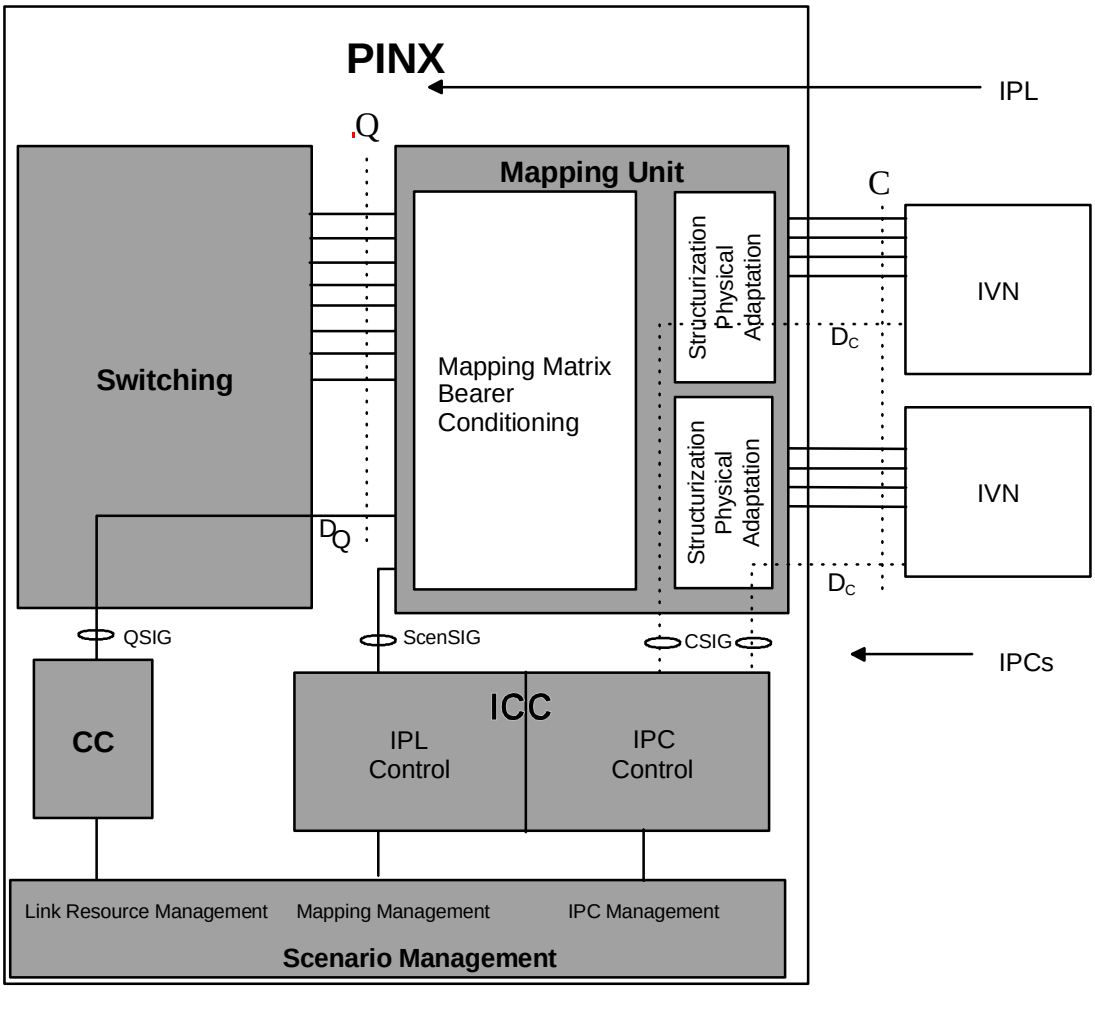

Figure 4 - Conceptual PINX Scenario Handling Functionality

7 Configuration Variants

A number of configuration variants can occur in practice, which involve multiple instances of certain entities, e.g.:

- a PINX has multiple IPLs, e.g. is interconnected with more than one PINX;
- more than one type of IVN exists between two PINXs;
- at each PINX the IPCs of an IVN are spread differently among the available interfaces.

These situations can occur in any combination.

7.1 PINX with Multiple IPLs

A PINX can have multiple IPLs, each terminated within the PINX at its own instance of the Q reference points. These IPLs may lead to the same peer PINX or to different peer PINXs. Different IPLs can be conveyed through the same or different IPCs.

An example of a PINX with two IPLs linking its 2 peer PINXs is shown in Figure 5. The IPCs share the same IVN. According to ISO/IEC 11579-1, the instances of Q reference point are marked by indexes, Q_0, Q_1, Q_2 etc.

© ISO/IEC 2001 - All rights reserved
Copyright International Organization for Standardization
Provided by IHS under license with ISO
No reproduction or networking permitted without license from IHS
Not for Resale

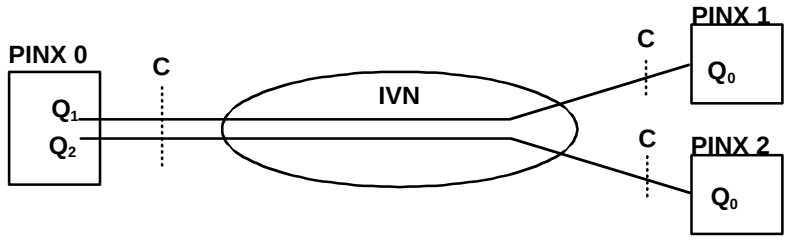

Figure 5 - Example of a PISN with Multiple IPLs

7.2 More than One Type of IVN

The channels of the IPL are conveyed via IPCs of different IVNs. Examples are:

— the base traffic is routed through leased lines, whereas the peak traffic between the two PINXs is conveyed over switched connections of public ISDN equipment employed as an IVN.

— circuit mode calls are routed through leased lines, whereas packet mode calls and QSIG (and ScenSIG, if employed) are routed through a public switched packet data network employed as an IVN.

In this case multiple instances of the C reference point relate to the single Q reference point in each PINX. Examples of multiple instances of C reference point are given in Figure 4.

7.3 Different Spread of IPCs among the Interfaces at the Two PINXs

The way in which IPCs are spread over the interfaces available at one PINX can differ from the way in which the IPCs are spread over the interfaces available at the peer PINX. In the case of public ISDN equipment, even the type of interface (basic or primary rate access) may be different at the two sides of the IVN. Except in the case of dedicated physical link or dedicated transmission systems.

Such a situation is shown in Figure 6.

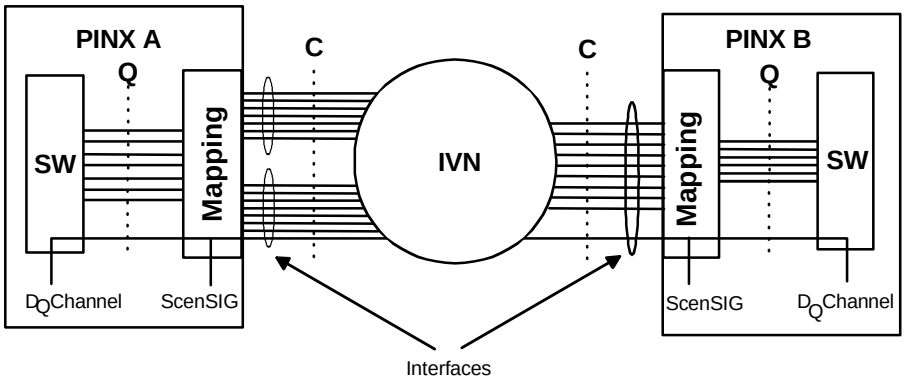

Figure 6 - Different Interfaces at either Side of the IVN

In this particular example the IPCs supporting the IPL are spread over two interfaces at PINX A (one of which carries inter-PINX signalling information), but use only one interface at PINX B.

© ISO/IEC 2001 – All rights reserved
Copyright International Organization for Standardization
Provided by IHS under license with ISO
No reproduction or networking permitted without license from IHS
Not for Resale

8 IPL Establishment and administration procedures

The establishment of an IPL starts with the establishment of the underlying IPC, after which an association between the peer PINXs will be established. This process logically corresponds to the inauguration of the two peer instances of Q reference point.

The IPL, in general, consists of one D_Q-channels and one or more U_Q-channels (See 5.2.2). Thus, the inauguration of an IPL includes the coupling of the D_Q-channels. This needs to occur in a synchronised manner at both sides of the IPL.

Synchronised IPL establishment can be achieved by manual intervention at either PINX or by means of ScenSIG.

The use of ScenSIG allows all the functions listed in 6.2.2 to be performed, including those that cannot be done by manual intervention. Not all IVN types require the use of ScenSIG. The factors that dictate the use of ScenSIG include security, the question whether coupling is inherently given by the IPC establishment procedure, cost, etc.

The types of IVNs that require ScenSIG needs to be determined on a case by case basis and cannot be standardised. The following examples can be taken as models for an implementation-specific assessment.

— A leased line-type IVN does not require ScenSIG for IPL establishment. All data required for the inauguration process can be entered into scenario management by manual intervention.

— The UUS3-type IVN, as offered by a public ISDN, inherently provides two IPCs, one for the exchange of inter-PINX signaling information and one for the transfer of user information. All data required for the inauguration process are inherently given to scenario management by the IPC establishment process.

However, if ScenSIG is not employed, care should be taken of protection against fraudulent or incidental misuse of the PINXs' IPC ports. Establishment of such protection can be achieved, e.g., by the use of the CLIP and/or CUG supplementary services of the IVN.

— A public ISDN-type IVN providing a variety of bearer capabilities and a flexible number of B-channel for the exchange of inter-PINX signaling information and the transfer of user information will, in practice, require the use of ScenSIG.

  Since ScenSIG can accommodate sophisticated authentication mechanisms, enhanced protection against fraudulent or incidental misuse of the PINXs' IPC ports can be refrained from.

Clauses 8.1 and 8.2 describe the following IPL establishment procedures with and without the employment of ScenSIG, in particular, for public ISDN-type IVN and lease line-type.

8.1 IPL Establishment using ScenSIG

The steps involved in establishing an IPL using ScenSIG as the means of co-ordinating the two PINXs are:

— static pre-conditions which must be coordinated and set in both PINXs;

— the establishment of a First IPC between the two PINXs;

— the IPL initialization process;

— the establishment of a D_Q-channel;

— the establishment of U_Q-channels.

© ISO/IEC 2001 - All rights reserved

Copyright International Organization for Standardization
Provided by IHS under license with ISO
No reproduction or networking permitted without license from IHS
Not for Resale

The PINX that initiates the establishment of an IPL is known as PINX A and the peer PINX is known as PINX B.

8.1.1 Static Pre-Conditions

Scenario Management in PINX A and PINX B need to know the following information in advance:

- the fact that its peer does exist;
- which scenario applies to the First IPC;
- a PISN number that will cause routing to PINX B's Scenario Management;
- if applicable, supplementary services that are to be used (e.g., Subaddressing, Closed User Group, in the case where public ISDN is employed as IVN);
- if applicable, information needed for mutual identification and authentication via ScenSIG;
- what Bearer Conditioning needs to be provided for accommodating ScenSIG;
- how many U_Q-channels are to be established initially and through which these scenario are to be provided.

The mechanisms for providing this knowledge to Scenario Management are outside the scope of this document.

8.1.2 Establishment of a First IPC

The Scenario Management of PINX A shall set up a basic call connection, by means of CSIG, to the Scenario Management of its peer PINX (B).

Since IPL establishment should work even when the IVN provides only basic services, access to the peer Scenario Management can only be achieved by a dedicated (preferably ex-directory) number of the IVN NP.

In addition to a basic call, and if supported by the IVN, further means can be used to reach PINX B's Scenario Management entity and/or provide mutual identification, e.g.:

- a particular LLC and/or HLC code;
- a particular subaddress;
- a particular piece of information in a User-User message;
- the CLIP and COLP supplementary services of the IVN;
- a combination of the methods above.

NOTE 1 - The types of information listed above can also provide enhanced security against accidental or fraudulent access to the PINX management entity. The actual choice of security information, and its possible encryption, will depend on the availability of supporting supplementary services of the IVN. Statements on their characteristics and provision are outside the scope of this document.

The additional use of the CUG supplementary service to enhance access security to PINX B should be studied.

NOTE 2 - If the CUG supplementary service is used in combination with the DDI supplementary service of the IVN, both the public ISDN's and the PISN's CUG supplementary services need to be involved.

8.1.3 IPL Initialisation Process

ScenSIG is used, via the First IPC, for the confirmation that this IPC has been successfully established. This will occur as soon as the underlying layer services are available to ScenSIG. With

© ISO/IEC 2001 – All rights reserved
Copyright International Organization for Standardization
Provided by IHS under license with ISO
No reproduction or networking permitted without license from IHS
Not for Resale

the interchange of confirmation, and possibly identification and authentication information (see 6.2.2), the IPL can be considered established.

8.1.4 Establishment of the D_Q-Channel

QSIG can be conveyed on the first or on another IPC.

8.1.4.1 D_Q-Channel and ScenSIG on the First IPC

The Scenario Management function of the initialising PINX indicates, via ScenSIG, which multiplexing/de-multiplexing capability should be used for distinguishing between QSIG and ScenSIG. QSIG can then start up between the two CCs.

8.1.4.2 D_Q-Channel and ScenSIG on another IPC

The two PINXs agree, via ScenSIG, on the establishment of a new IPC for use as a D_Q-channel and on the Bearer Conditioning to be applied.

For any newly established IPC between the two peer PINXs special precautions must be taken

- to indicate to PINX B that the incoming setup request concerns an IPC rather than a call setup to a PISN user (see 8.2);
- to prevent, or ensure correct handling of, collision of multiple simultaneous incoming setup requests for IPCs which belong to different IPLs (i.e. originating from other PINXs);
- to avoid accidental or fraudulent access to PINX B's CC by non-authorized users.

The *window technique* should be used as a method for matching these requirements. This technique employs the following procedure:

> The initialising PINX Scenario Management function indicates (via ScenSIG) to PINX B's Scenario Management function that it wants to establish a new IPC within the IPL already in use. PINX B responds by returning a routing number (preferably: ex-directory) included in the IVN numbering plan. (Other addition security enhancements, as described in 8.2 may also be used.) PINX B during a specified time window must answer a call to this number. PINX B only accepts a call that provides PINX A's calling identity. The calling identity can be transferred as supplementary service information, e.g. CLIP, subaddress.

After applying the agreed Bearer Conditioning, QSIG can start up between the two CCs.

To enable QSIG to be removed from its initial IPC to another one later during the lifetime of a scenario, ScenSIG will provide a negotiation function, so that both PINXs can agree on such later change.

8.1.5 Establishment of U_Q-Channels

Either PINX can initialise channels independently of the direction of the initialisation of the IPL to which the channel is to belong.

The establishment of an IPC to convey one or more U_Q-channel follows the same procedure as specified for the D_Q-channel, see 8.4.2. For each U_Q-channel the two PINXs will agree, via ScenSIG, on a channel number, unique within the IPL, by which the channel can be referred to by QSIG.

U_Q-channels may be removed by agreement of the two PINXs via ScenSIG.

8.1.6 Channel Mapping

At IPL level, i.e. at the Q reference point, all channels are unambiguously distinguishable.

Channels for signalling and user information transfer can be identified by mapping their identity at Q onto a channel or timeslot identity at a particular interface at the C reference point. How this is

© ISO/IEC 2001 - All rights reserved

Copyright International Organization for Standardization
Provided by IHS under license with ISO
No reproduction or networking permitted without license from IHS
Not for Resale

achieved, is a matter of local relevance only, and is thus left for individual implementation. Conceptually, the PISN Scenario Management function is responsible for obtaining and memorising the identity mapping data.

The information on the allocation of the D_Q-channel to a particular channel or timeslot at the interface at the C reference point is not interchanged via ScenSIG, but will be maintained in both PINXs for the lifetime of the inter-PINX link.

The same applies to U_Q-channels, except that the mapping information will only be kept for the lifetime of the particular U_Q-channel.

8.2 IPL Establishment Procedures without using ScenSIG

The steps involved in establishing an IPL without using ScenSIG as the means of co-ordinating the two PINXs are similar to those in clause 8.1, with the exception that the IPL initialisation step does not apply.

Only Static Pre-conditions need to be known by Scenario Management in each PINX.

- that its peer exists;
- which scenario applies to the IPC, which will be used for the D_Q-channel, and hence the Bearer Conditioning needed;
- how many U_Q-channels are to be established initially and through which these scenario are to be provided;
- rules for numbering U_Q-channels;
- information needed to establish the First IPC (PINX A will need to know a number that will cause routing to PINX B's Scenario Management, and both PINXs will need knowledge of supplementary services to be used, in the case where public ISDN is employed as IVN);
- information needed to establish other IPCs.

The mechanisms for providing this knowledge to Scenario Management are subject to configuration management and are outside the scope of this document.

8.3 IPL Administration Procedures

Basically, the IPL administration procedures are the same as the IPL initialisation procedures. If ScenSIG is employed for IPL establishment, it should also be use for IPL administration. These procedures include:

- Bearer Modification, if applicable;
- Dis-establishment of U_Q-channels;
- Re-establishment of U_Q-channels.

9 Items for Future Standardisation

Different types of network and different bearer capabilities offered by connections through these networks need to be investigated for their suitability as IVNs and IPC.

Networks to be considered should include:

- Public ISDN;
- Leased Lines;

© ISO/IEC 2001 – All rights reserved
Copyright International Organization for Standardization
Provided by IHS under license with ISO
No reproduction or networking permitted without license from IHS
Not for Resale

— PSPDN.

Bearer capabilities to be considered should include:

— dedicated, semi-permanent and switched forms of circuit-mode for QSIG, ScenSIG and U_Q-channels;

— and dedicated, semi-permanent and switched forms of packet-mode for Q-SIG and ScenSIG.

9.1 Mapping Function

For CM, PM, and Integrated Scenario types.

9.1.1 Physical Adoption

Specification for the following type of interfaces need to be investigated for their suitability as Physical Adaptation specifications:

— Digital Leased Line interfaces;

— ISDN Basic Access;

— ISDN Primary Rate Access;

— Analog leased lines.

Other types of interfaces are not precluded from future investigation.

9.1.2 Mapping Matrix

The Mapping Matrix needs to cover SCM.

9.1.3 Static Pre-Conditions

Although setting of static pre-conditions is mandatory, the parameters and their values have local significance only, and no need is seen for the standardisation of their structure or format.

NOTE - Setting, changing, structure and format of this data may be the subject of configuration management standardisation. This is outside the scope of this document.

9.2 ScenSIG

The ScenSIG information flows and the means for their transfer need to be standardised. This includes:

— protocol architecture, e.g. separation from QSIG.

— the actual signaling protocol.

9.2.1 IPL Establishment and Administration Procedures

— acknowledgment process for successful IPC establishment;

— identification procedures, parameters and values;

— provisions for authentication, encryption;

— pre-announcement and negotiation procedure for establishing/disestablishing IPCs for D_Q-channels and/or (further) U_Q-channels;

© ISO/IEC 2001 - All rights reserved

Copyright International Organization for Standardization
Provided by IHS under license with ISO
No reproduction or networking permitted without license from IHS
Not for Resale

9.2.2 Bearer Modification Procedures

This might require negotiation procedures. Further study is required.

9.3 Bearer Conditioning

Messages for the identification of non-public network bearer capabilities need to be developed. Further study is required.

10 Scenarios

This section describes and classifies methods of interconnecting PINXs using transmission and connections capabilities provided by different types of IVNs. Each interconnection type is called a scenario.

Also shown is the mapping of the U_Q-channels and D_Q-channels to the B-channels and D-channels at the C reference point.

NOTE - For all scenarios using a public ISDN, the D-channel at the access and any B-channel not being used as an IPC, may also be used to access services of the public ISDN for purposes other than IPC.

Where applicable, the presentation of a third PINX explicitly indicates that the Scenario can support multiple instances of Q reference points across a single IVN access. For simplicity, shared access use is not shown.

The following generic combinations have been identified as scenarios.

Each Scenario describes a generic combination of a method of providing a user information connection (U_Q-channel) and a method of providing an inter-PINX signalling connection (D_Q-channel). Other combinations of these methods may also be applicable, and the classification given here is not intended to exclude them.

10.1 Scenarios: Dedicated Transmission Systems

The inter-PINX connections are pre-established and are point-to-point connections. The transmission system encompasses dedicated physical links and dedicated transmission systems.

NOTE - In general, transmission systems may provide structured or unstructured transmission capabilities. In the unstructured case, a single bit stream is provided. Whilst, in the structured arrangement, the transmission system provides a bit stream that is structured into several channels (time slots).

10.1.1 Scenario 1.1 - Unstructured Transmission Link

In this scenario, a transmission link provides only unstructured data transmission at a specified data transfer rate, see figure 7. The Mapping unit, as a minimum must provide layer 1 functions such as synchronisation control, framing and bit error detection. It may also provide sub-multiplexing functions whereby the bit stream is divided into several channels. Some examples are, 2048 kbit/s multiplexed to 32 x 64 kbit/s, or 64 kbit/s multiplexed to 4 x 16 kbit/s.

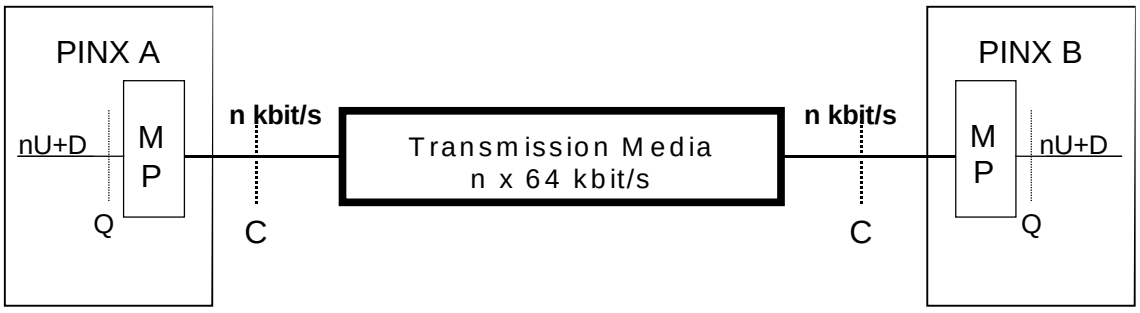

Figure 7 - Unstructured Transmission Link

© ISO/IEC 2001 – All rights reserved
Copyright International Organization for Standardization
Provided by IHS under license with ISO
No reproduction or networking permitted without license from IHS
Not for Resale

NOTE - PINXs could be interconnected using interfaces according to ISDN basic rate accesses (ITU-T Rec. I.430). However, the functional range of these interfaces allows for short distances only, e.g. back-to-back operation of two PINXs that are collocated on the same premises. The use of such interfaces is considered to be outside the scope of this scenario.

10.1.2 Scenario 1.2 - Structured Transmission Link

In this scenario, the transmission link supports channelised data transfer where each channel provides octet structured data typically at 8000 octet/s, see Figure 8. An example is a primary rate leased line. The Mapping unit as a minimum must support the framing and synchronisation arrangement in operations at the C reference point. Normally, public networks provide standardised channel structure such as 24 x 64 kbit/s or 31 x 64 kbit/s.

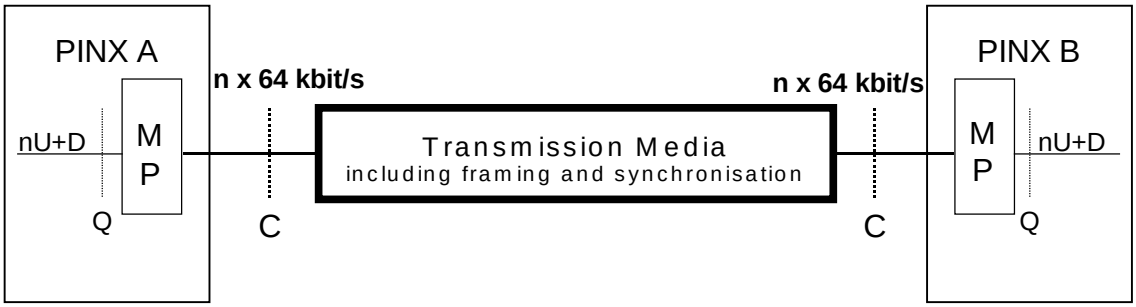

Figure 8 - Dedicated transmission System

10.2 Scenarios: Semi-Permanent IVN Connections

Semi-permanent connections may be established by the IVN provider either by a management function or as a response to an explicit signalling request from the corporate networks management function (i.e., not using PSS1).

Any number of U_Q-and D_Q-channels may be provided at the access interface. The U_Q-channels are mapped 64 kbit/s circuit-switched connections. The D_Q-channel may be mapped in the ways described in the following subclauses.

10.2.1 Scenario 2.1 - Semi-permanent Circuit Switched

The IVN provides only circuit-switched connections between the accesses. The D_Q-channels are mapped onto B-channels (or equivalent for non-ISDNs) at the IVN access. These are circuited switched to other PINXs, see figure 9.

© ISO/IEC 2001 - All rights reserved

Copyright International Organization for Standardization
Provided by IHS under license with ISO
No reproduction or networking permitted without license from IHS
Not for Resale

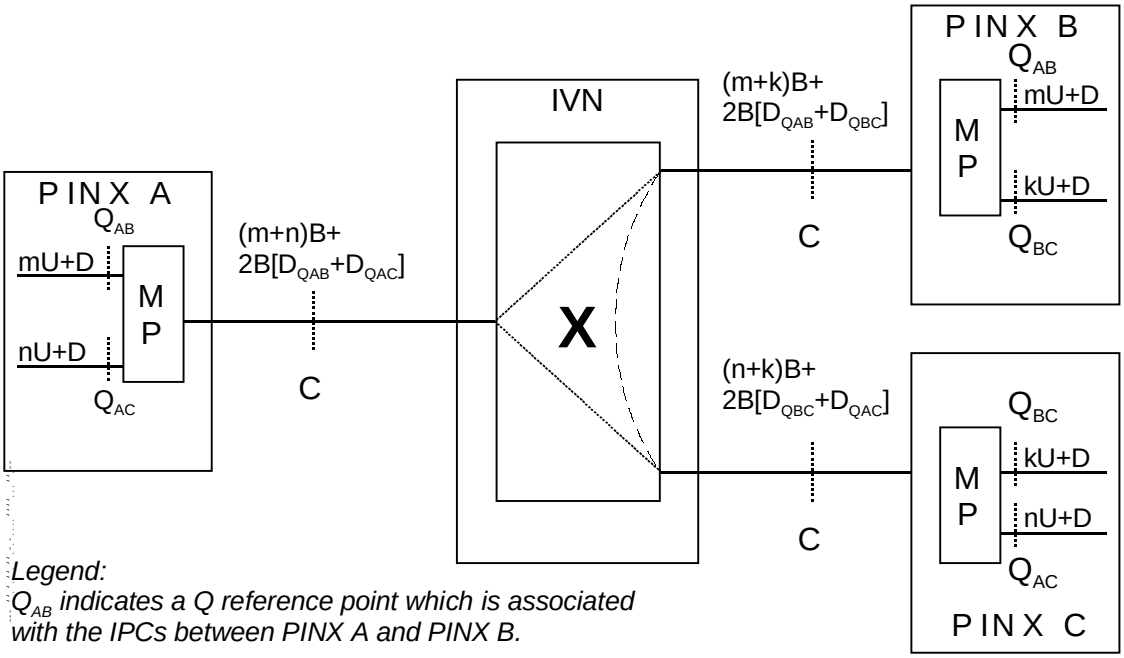

Figure 9 - Semi-permanent Circuit Switched

10.2.2 Scenario 2.2 - Permanent Virtual Call

The intervening ISDN provides semi-permanent circuit-switched connections and permanent virtual circuits (either packet or frame mode) between the accesses.

The D_Q is mapped to a virtual call within the B-channel or D-channel at the C reference point according to Rec. X.31. See figure 10.

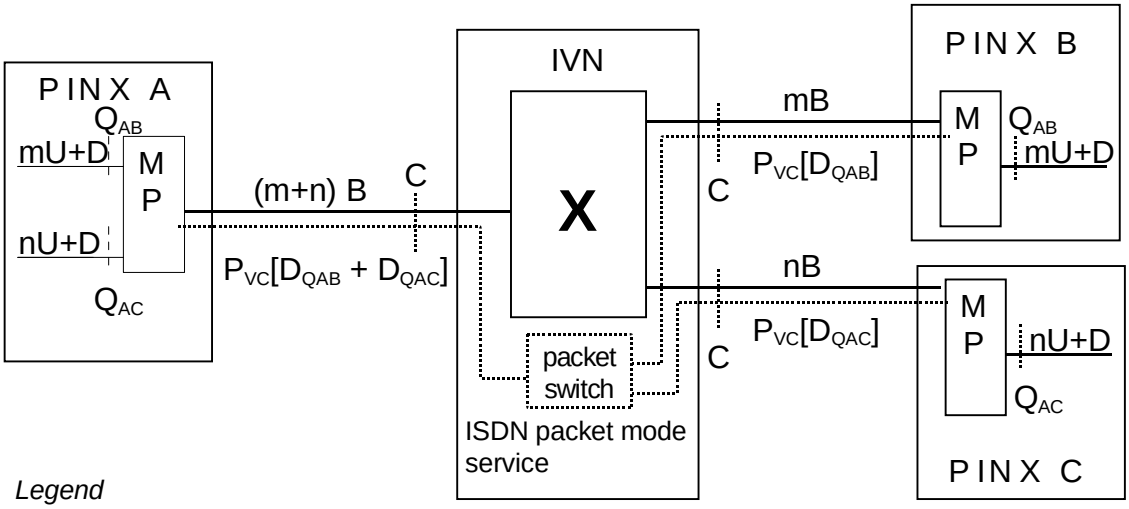

Figure 10 - Permanent Virtual Call

© ISO/IEC 2001 – All rights reserved
Copyright International Organization for Standardization
Provided by IHS under license with ISO
No reproduction or networking permitted without license from IHS
Not for Resale

10.3 Scenarios: On-Demand Public Network Connections

A PINX is able to establish on-demand connections (calls) via the IVN to the desired destination PINX. The U_Q-channels are mapped to B-channels at the C reference point. The D_Q-channels may be mapped in the ways described below.

NOTE - A IVN connection can be established and released for each PISN call or may be used to support several sequential PISN calls.

10.3.1 Scenario 3.1 - On-demand Circuit Switched

The IVN provides only on-demand circuit-mode calls between the PINXs. The D_Q-channels are mapped to B-channels (or equivalent in the case of non-ISDNs) of the IVN access. See figure 11.

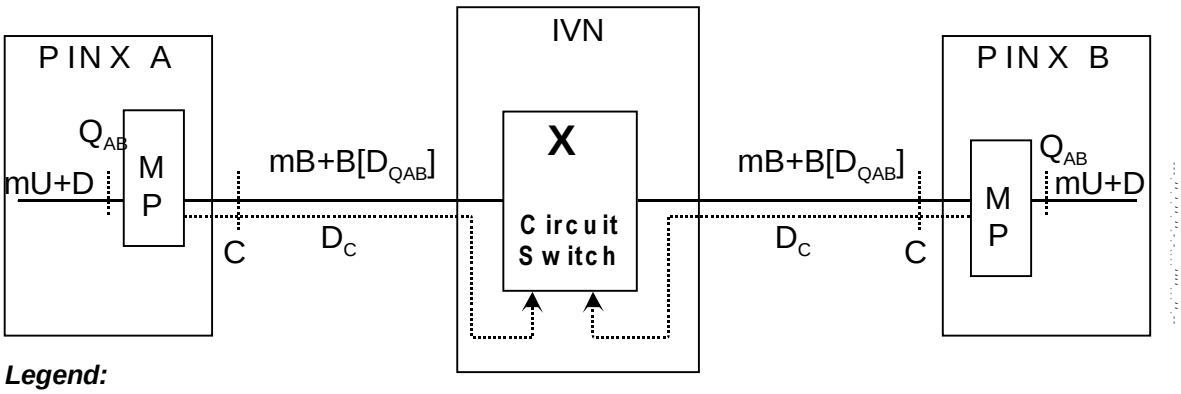

Legend:
Q_{AB} indicates a Q reference point which is associated with the IPC between PINX A and PINX B

Figure 11 - On-demand Circuit-Switched

10.3.2 Scenario 3.2 - ISDN Call with User-to-User Signalling

The intervening ISDN provides on-demand calls with the associated User-to-user Class 3 supplementary services between the PINXs. Each Q reference point consists of one U_Q-channel and one D_Q-channel; the U_Q-channel is mapped to the bearer connection and the D_Q-channel is mapped to the information transfer capability provided by the User-to-User supplementary service at the C reference point. See figure 12. Bearer independent signalling connections may use any existing User-to-User connection and if no such connection exists then a dummy ISDN call must be established between the PINXs.

© ISO/IEC 2001 - All rights reserved

Copyright International Organization for Standardization
Provided by IHS under license with ISO
No reproduction or networking permitted without license from IHS
Not for Resale

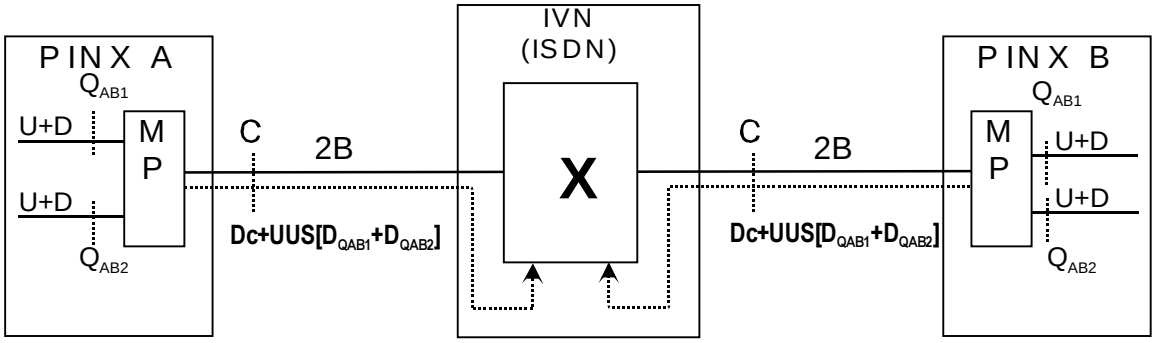

Legend
UUS is the information transfer capability provided by the User-to-user Information supplementary service associated with the bearer connection.

Figure 12 - ISDN call with User-to-user Signalling

10.3.3 Scenario 3.3 - On Demand Virtual Call

A PINX is able to establish a virtual call (either packet or frame mode) to the destination PINX via the intervening ISDN. The ISDN may support virtual calls on either the B- or D-channel as per Rec. X.31.

The U_Q-channels are mapped to ISDN circuit mode calls. The D_Q-channels are mapped to the virtual call connections. See figure 13.

Other ISDN packet mode services such as the frame mode service or the signalling bearer service may be used to transport the D_Q information.

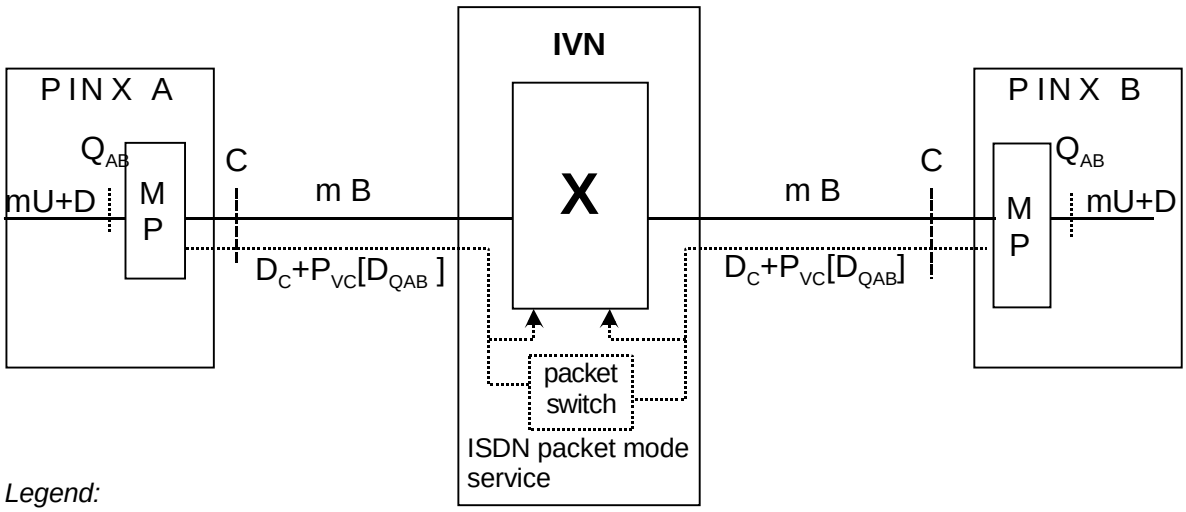

Legend:
Q_{AB} indicates the Q reference point that is associated with the interconnection between PINX A and PINX B.
P_{VC} represents the packet mode carrier mechanism on either B or D channel

Figure 13 - ISDN call with D_Q mapped to a packet mode call

© ISO/IEC 2001 – All rights reserved
Copyright International Organization for Standardization
Provided by IHS under license with ISO
No reproduction or networking permitted without license from IHS
Not for Resale

10.4 Scenarios: Virtual Private Network

10.4.1 Introduction

In VPN scenarios, an Attached PINX is connected to an access provided by a third party network, (normally a public network) that provides support for the inter-PINX signalling protocol, PSS1 (QSIG) and the numbering plan used by the PISN. Characteristic of these scenarios is the emulation by the third party network of a transit PINX functionality between the accesses. This functionality of the third party network is called the interconnecting network (ICN) and is described in ETSI TR 172. The ICN may also provide a Gateway PINX functionality in order to facilitate the routing of calls to and from the public network, e.g., PSTN or ISDN.

Although VPNs are able to support multiple Corporate Networks, in this section only a single instance of a CN is depicted.

The VPN architecture is that part of a CN that provides corporate networking between customer equipment where:

— The shared switched network infrastructure replaces leased lines and a transit PINX;

— The customer premises may be any end node functionality such as a PBX, Centrex, LAN router, or multiplexer;

— CN user may be served by a terminal connected to an end node PINX that resides on customer premises, or that is provided by public network equipment (Centrex); and

— The shared switched network infrastructure is able to support multiple Corporate Networks.

10.4.2 Access Arrangements

VPNs may provide different access arrangements for the connection of the attached PINXs as described below in Table 2:

Table 2 - Types of VPN Access

No.	Description	Type of Mapping
1.	Separate access: T and C reference points reside on different interfaces	Static
2.1	Shared Access: Physical layer discrimination: T and C reference points reside on the same interface. Time-slots are pre-assigned to each reference point. TSIG and QSIG are on different D_C-channels.	Static
2.2	Shared Access: Data link layer discrimination T and C reference points reside on the same interface. Time-slots are pre-assigned to each reference point for use as U_Q-channels or B_T -channels. TSIG and QSIG are on the same time slot.	Static
2.3	Shared Access: A common Protocol Control function in the network layer supports both TSIG and QSIG information flows. It uses a discrimination function to distinguish between VPN and public calls.	Dynamic
3.	Dedicated Access: All calls are routed via a C reference point as PISN calls.	Static

© ISO/IEC 2001 - All rights reserved

Copyright International Organization for Standardization
Provided by IHS under license with ISO
No reproduction or networking permitted without license from IHS
Not for Resale

10.4.2.1 Access type 1: Separate access

The PINX uses a separate access for PISN calls than for calls to the public network. The type of interface indicates inherently the functions to be invoked for the support of the respective information flows.

The mapping of U_Q-channels to the time slots available at the C reference point is determined by the subscription arrangement.

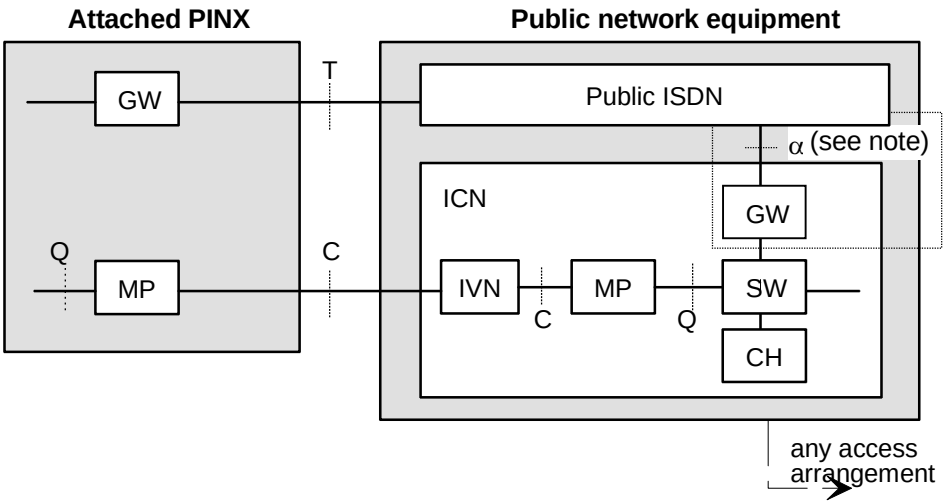

NOTE - Not all VPNs may provide a gateway to the public network.

Figure 14 - VPN access with separate interfaces for public and PISN calls

10.4.2.2 Access Type 2.1: Shared Access: Physical layer discrimination:

The time slots at the C reference point are permanently allocated for either PISN or public calls. Separate time slots are used to carry QSIG and TSIG information flows. Other time slots are assigned either as U_Q- or B_T-channels.

NOTE - The time-slot for conveying the information flows for PISN calls should be subject to mutual agreement between the PISN authority and the VPN provider.

10.4.2.3 Access Type 2.2: Shared Access: Data link layer discrimination

The access control protocol for PISN calls (QSIG) and access control protocol for public calls (DSS1) are multiplexed on the D-channel by the use of separate data link layer control identities (Terminal End-point Identifiers). The B-channels at the C reference point are permanently allocated for either PISN or public calls.

The mapping of U_Q-channels is static.

10.4.2.4 Access Type 2.3: Shared Access: Common access protocol with call discrimination

A common access control protocol (see ITU-T Rec. I.130 and Rec. I.120) is used for PISN and public calls. In this case, the public access protocol DSS1 has been enhanced to support the information flows included in PSS1.

NOTE - ITU-T has also enhanced ISUP so that VPN applications located in different nodal entities are able to exchange PSS1 information flows.

The PINX provides separate call control for ISDN calls and PISN calls. Each of these call control entities uses a common protocol control service (see ITU-T Rec. I.130 and Rec. I.120). The PINX uses a call discrimination protocol element to distinguish between PISN calls and ISDN calls. The

© ISO/IEC 2001 – All rights reserved
Copyright International Organization for Standardization
Provided by IHS under license with ISO
No reproduction or networking permitted without license from IHS
Not for Resale

PINX also provides a B-channel co-ordination function that allows both ISDN and PISN calls to be dynamically allocated to the B-channels at the interface.

A VPN supporting scenario type 2.3 shall support interoperability between scenarios type 1 and 3.

PISN calls are processed by the ISDN using PISN call control functions and not the ISDN call control functions. The ISDN as a minimum provides for the transmission of the PISN call information flows between accesses with compatible PISN call handling capabilities. For example, a PISN call may be connected between shared access and any of the PISN accesses specified in this Technical Report.

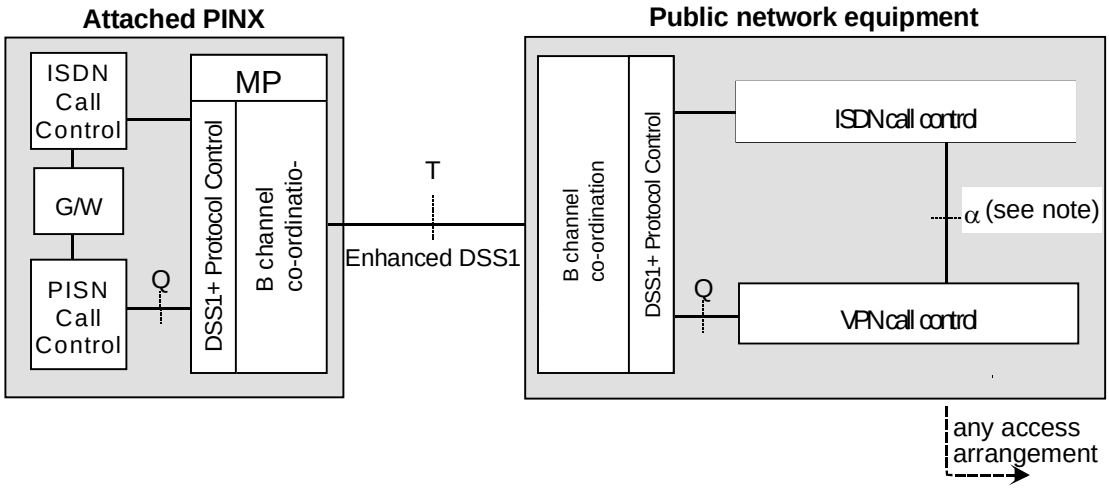

NOTE - α defines the boundary between the ICN and the public ISDN, in particular with regard to numbering, charging, management and routing.

Figure 15 - Joint access arrangement using an enhance ISDN access protocol (DSS1+)

10.4.2.5 Sub-Scenario 3: Dedicated Access

Only the information flows for PISN calls occur at the interface at the C reference point. Break-out into the public network occurs through a gateway function within the VPN. Number analysis and routing functions in the ICN determine which calls that are to be routed to the public network gateway. The VPN may provide gateway functions at different geographical points and to more than one public network.

The mapping of U_Q-channels is static, i.e. no per-call reallocation of the mapping onto the time-slots at the C reference point takes place.

NOTE - This sub-scenario can be considered as the trivial case of sub-scenario 1, if no interface supporting the T reference point has been configured. In this sub-scenario, the attached PINX does not provide gateway functionality.

In this scenario, the VPN always provides at least one gateway access to the public network.

© ISO/IEC 2001 - All rights reserved
Copyright International Organization for Standardization
Provided by IHS under license with ISO
No reproduction or networking permitted without license from IHS
Not for Resale

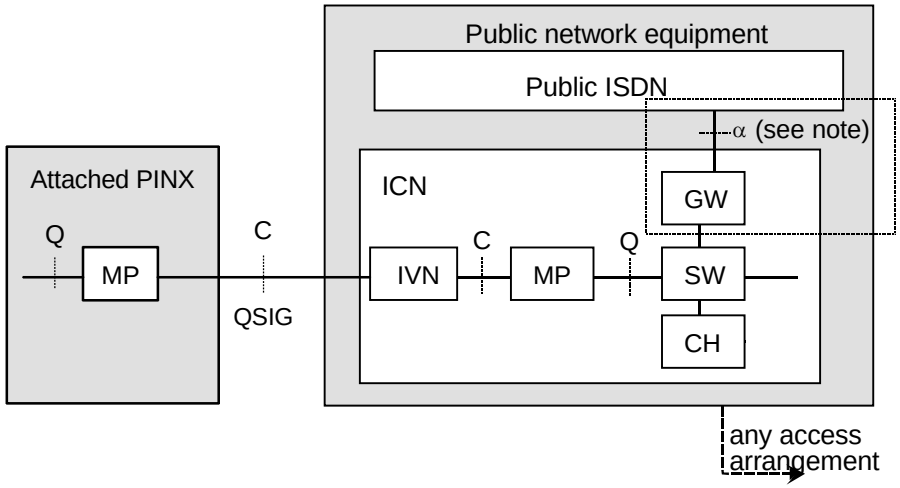

Figure 16 - A dedicated access using QSIG as an access protocol

10.4.3 Scenario 4.1 -Transit PINX

In this scenario, the VPN emulates a transit PINX. The functions of a transit PINX are specified in ISO/IEC 11572 and ISO/IEC 11582. The VPN supports routing based upon the native number plan (normally a private numbering plan specified in ISO/IEC 11579) used by the PISN.

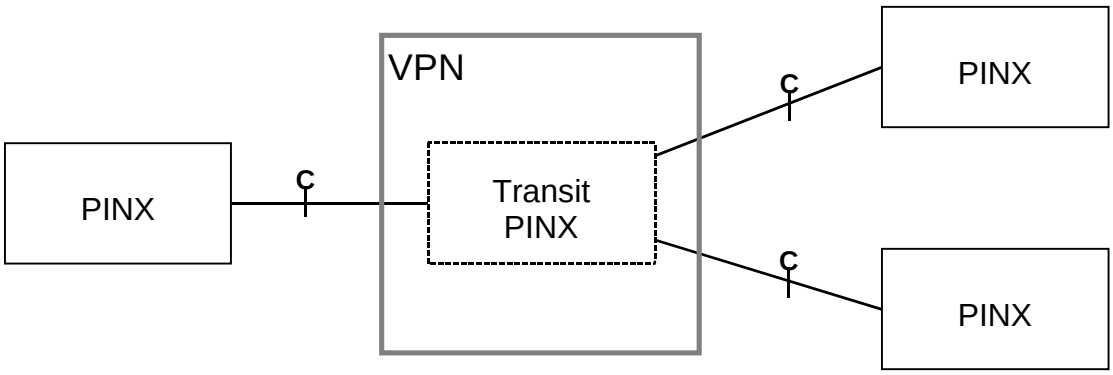

Figure 17 - VPN emulating a Transit PINX

10.4.2 Scenario 4.2 -Centrex

In this scenario, the VPN emulates an End PINX. The basic call functions of an end PINX are specified in ISO/IEC 11572. Other access protocol requirements are specified in ISO/IEC 11582 and other International Standards for supplementary services. At the terminal interfaces (S reference points), the Centrex administrator allocates numbers to the terminal interfaces from the native numbering plan of the PISN.

© ISO/IEC 2001 – All rights reserved
Copyright International Organization for Standardization
Provided by IHS under license with ISO
No reproduction or networking permitted without license from IHS
Not for Resale

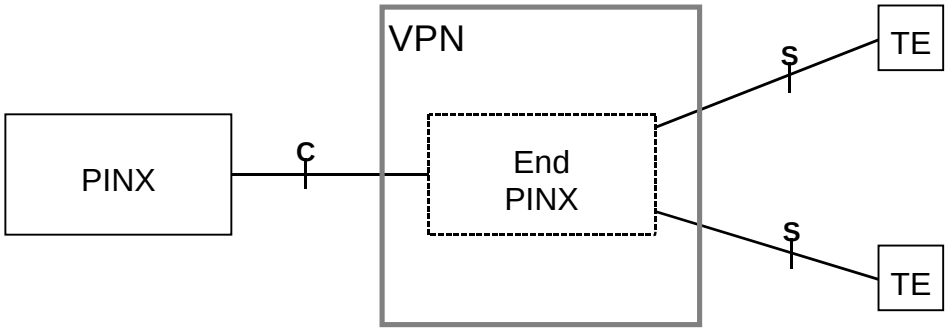

Figure 18 - VPN emulating an End PINX

10.4.3 Scenario 4.3 -Gateway to another network

In this scenario, the VPN emulates an incoming and/or outgoing gateway PINX as is specified in ISO/IEC 11572 and thus allows PISN calls to be routed to another network, usually a public network. In general, the VPN may implement interfaces to several different other networks or to the same other network at several different geographical locations. In addition, the VPN may be implemented using a network infrastructure that is common to the public network. In this case, the gateway function may be internal to the network infrastructure (e.g. in an exchange). The functions of a call entering or leaving the gateway PINX function are commonly called “break-in” and “break-out” respectively. The point of break-out to the other network is determined by the routing functions of the VPN.

In general, the VPN connection to the other network will be via a suitable inter-nodal public network protocol (e.g., ISUP at the N reference point). The VPN (gateway PINX emulation) provides service interworking between the PISN services and the services of the other network. The service interworking includes protocol interworking between PSS1 and the public inter-nodal protocol (e.g. ISUP or a national signalling system), and possibly number translation.

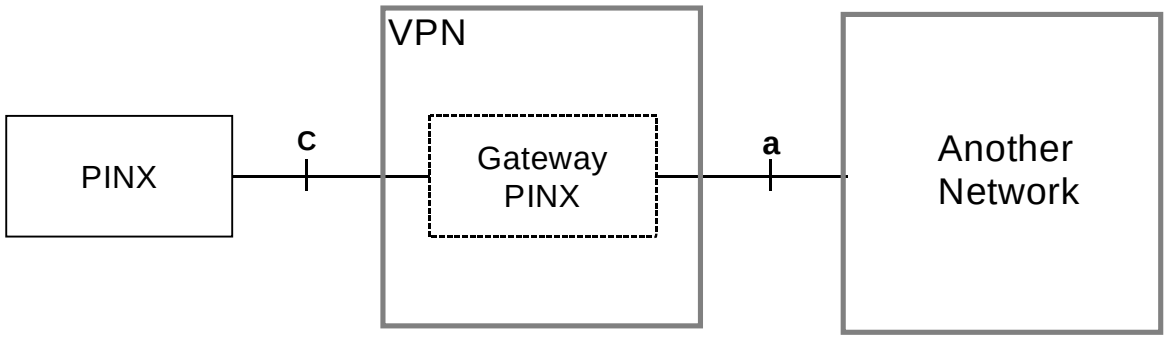

Figure 19 - VPN emulating a Gateway PINX

--`,,```,,,,````-`-`,,`,,`,`,,`---
© ISO/IEC 2001 - All rights reserved
Copyright International Organization for Standardization
Provided by IHS under license with ISO
No reproduction or networking permitted without license from IHS
Not for Resale

Annex A

Attribute Values

Table A.1 contains examples of attribute values that can be applied to describe:

- the bearer capabilities of an IVN;
- the channel characteristics of a D_Q-/U_Q-channel and of an IS-channel.

Not all of the examples are equally appropriate to IPCs and to D_Q-/U_Q-channels.

Table A.1 - Examples of Attributes and Values

No.	Attributes	Values
1	Information Transfer Mode (operational mode for transferring information)	circuit packet ATM
2	Information Transfer Rate	bit rate (circuit mode) throughput rate (packet mode)
3	Information Transfer Capability (indicates restrictions of the type of information)	unrestricted digital information speech 3,1 kHz audio 7 kHz audio 15 kHz audio video other
4	Connection Establishment	demand semi-permanent permanent
5	Symmetry	unidirectional bi-directional symmetric bi-directional asymmetric
6	Connection Configuration (Description of the spatial arrangement for information transfer)	topology dynamics
7	Channel Rate	bit rate, e.g. 16, 32, 64, 128, 384 kbit/s
8	Structure	8 kHz integrity service data unit integrity time slot sequence integrity restricted differential time delay unstructured
9	Connection Control Protocol, Information Transfer Coding/Protocol	ISO/IEC 11572 (note 1) A-law / µ-law, ADPCM, etc.
10	Network Performance	Error and Slip
11	Type of IVN	ISDN PSTN X.25
12	Operations & Management	ScenSIG protocol (note 2)
13	Tariffing issues	(note 3)

© ISO/IEC 2001 – All rights reserved
Copyright International Organization for Standardization
Provided by IHS under license with ISO
No reproduction or networking permitted without license from IHS
Not for Resale

NOTES

1. The values of Item 9 depend on the channel usage. If the channel is used for signalling, the attribute value should indicate the appropriate bearer capability (e.g. a data link protocol like see ITU-T Rec. I.130). If the channel is used for user information transfer, the attribute value should specify the type of physical layer intervention such as A-law/μ-law coding, speech compression, etc.

2. No international standard is available.

3. Not subject to standardisation.

--`,,```,,,,````-`-`,,`,,`,`,,`---

© ISO/IEC 2001 – All rights reserved

Copyright International Organization for Standardization
Provided by IHS under license with ISO
No reproduction or networking permitted without license from IHS
Not for Resale

Annex B

Scenario 4.4 - Relay Node

In this scenario, the VPN emulates a relay node that provides the following functionality as a minimum:

- Minimal routing capability;
- Transparent handling of private networking information (e.g. transit counter).

The Relay Node transfers the information elements associated with PISN information flows to the next PINX entity without taking into account any supplementary service subscription information.

The method by which an attached PINX indicates the next PINX entity is by agreement with the VPN network provider. Two examples are:

- The access protocol carries information that enables the originating PINX to indicate to the ICN the identity of the destination PINX.
- The routing functions described above can also be implemented as an Additional Network Feature (e.g. ANF-Route Selection) which would specify the information flows and functions of the Relay node and the attached PINXs.

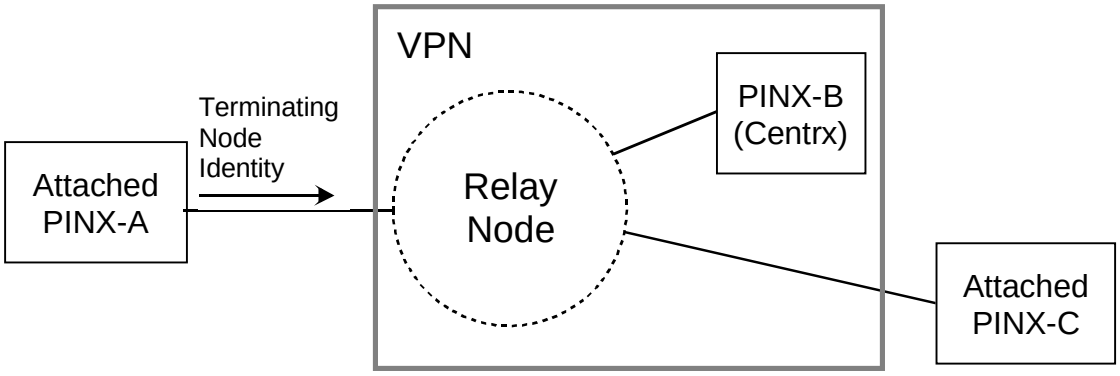

Figure B1 - VPN emulating a Relay Node

© ISO/IEC 2001 – All rights reserved
Copyright International Organization for Standardization
Provided by IHS under license with ISO
No reproduction or networking permitted without license from IHS
Not for Resale

ICS 33.040.35

Price based on 30 pages

© ISO/IEC 2001 – All rights reserved

Copyright International Organization for Standardization
Provided by IHS under license with ISO
No reproduction or networking permitted without license from IHS

Not for Resale