INTERNATIONAL STANDARD

ISO/IEC 10994

First edition
1992-06-01

Information technology — Data interchange on 90 mm flexible disk cartridges using modified frequency modulation recording at 31 831 ftprad on 80 tracks on each side — ISO Type 303

Technologies de l'information — Échange de données sur cartouche à disquette de 90 mm *utilisant un enregistrement à modulation de fréquence modifiée à* 31 831 ftprad, *80 pistes par face — ISO Type 303*

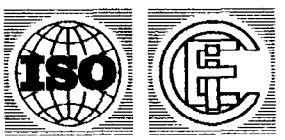

Reference number
ISO/IEC 10994:1992(E)

Copyright International Organization for Standardization
Provided by IHS under license with ISO
No reproduction or networking permitted without license from IHS

Not for Resale

Contents

		Page
Section 1 - General		1
1	Scope	1
2	Conformance	1
3	Normative references	1
4	Definitions	2
4.1	Average Signal Amplitude	2
4.2	case	2
4.3	direction of rotation	2
4.4	disk	2
4.5	eraseability	2
4.6	formatting	2
4.7	hub	2
4.8	in-contact	2
4.9	Index	2
4.10	initialization	2
4.11	line of access	2
4.12	liner	2
4.13	Master Standard Reference Flexible Disk Cartridge	2
4.14	Reference Erase Field	2
4.15	Reference Field	2
4.16	Secondary Standard Reference Flexible Disk Cartridge	2
4.17	shutter	3
4.18	Side	3
4.19	Standard Reference Amplitude	3
4.20	Test Erase Current	3
4.21	Test Recording Current	3
4.22	Typical Field	3
5	General description	3
5.1	Drawings	3
5.2	Main elements	3
5.3	Description	3
Section 2 - Environments, mechanical and physical characteristics		4
6	General requirements	4
6.1	Environment and transportation	4
6.1.1	Testing environment	4
6.1.2	Operating environment	4
6.1.3	Storage environment	4
6.1.4	Transportation	4

© ISO/IEC 1992
All rights reserved. No part of this publication may be reproduced or utilized in any form or by any means, electronic or mechanical, including photocopying and microfilm, without permission in writing from the publisher.
ISO/IEC Copyright Office • Case Postale 56 • CH-1211 Genève 20 • Switzerland
Printed in Switzerland

Copyright International Organization for Standardization
Provided by IHS under license with ISO
No reproduction or networking permitted without license from IHS
Not for Resale

6.2	Materials	5
6.2.1	Case	5
6.2.2	Liner	5
6.2.3	Disk	5
6.2.4	Hub	5
7	Dimensional characteristics	5
7.1	Case	5
7.1.1	Shape	5
7.1.2	Thickness	5
7.1.3	Hub access hole	6
7.1.4	Locating holes	6
7.1.5	Label area	6
7.1.6	Head windows	7
7.1.7	Write-inhibit hole	7
7.1.8	Identification hole	7
7.1.9	Profile of the shutter edge of the case	8
7.1.10	Shutter	8
7.2	Liner	8
7.3	Disk	9
7.3.1	Diameter	9
7.3.2	Thickness	9
7.4	Hub	9
7.4.1	Dimensions	9
7.4.2	Hub orientation holes	9
7.5	Optional handling notches	10
7.6	Interface between cartridge and drive	10
7.7	Compliance	10
8	Physical characteristics	11
8.1	Flammability	11
8.2	Coefficient of linear thermal expansion of the disk	11
8.3	Coefficient of linear hygroscopic expansion of the disk	11
8.4	Torque	11
8.4.1	Starting torque	11
8.4.2	Running torque without heads loaded	11
Section 3	- Unrecorded flexible disk cartridge	11
9	Magnetic characteristics	11
9.1	Recording area	11
9.2	Track geometry	11
9.2.1	Number of tracks	11
9.2.2	Width of tracks	11
9.2.3	Track location	11
9.2.4	Track number	12
9.3	Functional testing	12
9.3.1	Surface tests	12
9.3.2	Track quality tests	13
9.3.3	Rejection criterion	14
Section 4	- Recording method and track format	14
10	General requirements	14
10.1	Mode of recording	14
10.2	Track location tolerance of the recorded flexible disk cartridge	14

Copyright International Organization for Standardization
Provided by IHS under license with ISO
No reproduction or networking permitted without license from IHS
Not for Resale

10.3	Recording offset angle	14
10.4	Density of recording	15
10.5	Flux transition spacing	15
10.6	Average Signal Amplitude	16
10.7	Byte	16
10.8	Sector	16
10.9	Cylinder	16
10.10	Cylinder number	16
10.11	Data capacity of a track	16
10.12	Hexadecimal notation	16
10.13	Error Detection Characters (EDC)	17
11	Track layout	17
11.1	Index Gap	17
11.2	Sector Identifier	17
11.2.1	Identifier Mark	17
11.2.2	Address Identifier	18
11.3	Identifier Gap	18
11.4	Data Block	18
11.4.1	Data Mark	19
11.4.2	Data Field	19
11.4.3	EDC	19
11.5	Data Block Gap	19
11.6	Track Gap	19
12	Coded representation of data	19
12.1	Byte coding	19
12.2	Bit coding	20

Annexes

A - Test for compliance	26
B - Measurement of light transmittance	28
C - Method for measuring the effective track width	31
D - Procedure and equipment for measuring flux transition spacing	32
E - Data separators for decoding MFM recording	34
F - EDC implementation	35
G - Cartridge distortion test gauge	36
H - Method for measuring peak shift	37
J - Head and read amplifier for functional testing	41
K - Procedure for determining test recording current and test erase current	43

Copyright International Organization for Standardization
Provided by IHS under license with ISO
No reproduction or networking permitted without license from IHS
Not for Resale

Foreword

ISO (the International Organization for Standardization) and IEC (the International Electrotechnical Commission) form the specialized system for worldwide standardization. National bodies that are members of ISO or IEC participate in the development of International Standards through technical committees established by the respective organization to deal with particular fields of technical activity. ISO and IEC technical committees collaborate in fields of mutual interest. Other international organizations, governmental and non-governmental, in liaison with ISO and IEC, also take part in the work.

In the field of information technology, ISO and IEC have established a joint technical committee, ISO/IEC JTC1. Draft International Standards adopted by the joint technical committee are circulated to national bodies for voting. Publication as an International Standard requires approval by at least 75 % of the national bodies casting a vote.

International Standard ISO/IEC 10994 was prepared by the European Computer Manufacturers Association (as Standard ECMA-147) and was adopted, under a special "fast-track procedure", by Joint Technical Committee ISO/IEC JTC1, *Information technology*, in parallel with its approval by national bodies of ISO and IEC.

Annexes A to D and G to K form an integral part of this International Standard. Annexes E and F are for information only.

Copyright International Organization for Standardization
Provided by IHS under license with ISO
No reproduction or networking permitted without license from IHS
Not for Resale

Information technology - Data interchange on 90 mm flexible disk cartridges using modified frequency modulation recording at 31 831 ftprad on 80 tracks on each side - ISO Type 303

Section 1 - General

1 Scope

This International Standard specifies the characteristics of 90 mm flexible disk cartridges recorded at 31 831 ftprad using modified frequency modulation recording, on 80 tracks on each side. Such flexible disk cartridges are identified as ISO Type 303.

It specifies the mechanical, physical and magnetic characteristics of the cartridge, so as to provide physical interchangeability between data processing systems.

It also specifies the method of recording, the quality of the recorded signals, the track layout and the track format.

Together with ISO 9293, this International Standard provides for full data interchange between data processing systems.

2 Conformance

A 90 mm flexible disk cartridge is in conformance with this International Standard if it meets all mandatory requirements specified herein.

3 Normative references

The following standards contain provisions which, through reference in this text, constitute provisions of this International Standard. At the time of publication, the editions indicated were valid. All standards are subject to revision, and parties to agreements based on this International Standard are encouraged to investigate the possibility of applying the most recent editions of the standards indicated below. Members of IEC and ISO maintain registers of currently valid International Standards.

ISO 683-13:1986 - *Heat-treatable steels, alloy steels and free-cutting steels - Part 13: Wrought stainless steels*

ISO 8860-1:1987 - *Information processing - Data interchange on 90 mm (3.5 in) flexible disk cartridges using modified frequency modulation recording at 7 958 ftprad on 80 tracks on each side - Part 1: Dimensional, physical and magnetic characteristics*

ISO 8860-2:1987 - *Information processing - Data interchange on 90 mm (3,5 in) flexible disk cartridges using modified frequency modulation recording at 7 958 ftprad on 80 tracks on each side - Part 2: Track format*

ISO 9293:1987 - *Information processing - Volume and file structure of flexible disk cartridges for information interchange*

ISO 9529-1:1989 - *Information processing systems - Data interchange on 90 mm (3,5 in) flexible disk cartridges using modified frequency modulation recording at 15 916 ftprad, on 80 tracks on each side - Part 1: Dimensional, physical and magnetic characteristics*

ISO 9529-2:1989 - *Information processing systems - Data interchange on 90 mm (3,5 in) flexible disk cartridges using modified frequency modulation recording at 15 916 ftprad, on 80 tracks on each side - Part 2: Track format*

ISO/IEC 9983:1989 - *Information processing systems - Designation of unrecorded flexible disk cartridges.*

Copyright International Organization for Standardization
Provided by IHS under license with ISO
No reproduction or networking permitted without license from IHS
Not for Resale

4 Definitions

For the purpose of this International Standard the following definitions apply.

4.1 Average Signal Amplitude: The Average Signal Amplitude for a track is the arithmetically averaged value of the output voltages measured peak-to-peak over the whole track.

4.2 case: A protective enclosure including a shutter mechanism, an identification hole and a write-inhibit hole.

4.3 direction of rotation: The direction of rotation shall be counter-clockwise when looking at Side 0.

4.4 disk: A flexible disk which accepts and retains, on the specified side or sides, magnetic signals intended for input/output and storage purposes.

4.5 eraseability: The eraseability is the ratio (percentage) of the residual Average Signal Amplitude, after erasing the original signal, to the original Average Signal Amplitude on the specified track and at the specified flux transition density.

4.6 formatting: Writing the proper control information establishing the physical cylinders and the addresses of physical records on the surfaces of the flexible disk.

4.7 hub: A centring and referencing device attached to the disk which allows torque to be transmitted to the disk. The hub is attached to the centre of the disk. It ensures centring of the disk on the drive shaft in a unique angular position.

4.8 in-contact: An operating condition in which the magnetic surface of the disk is in physical contact with the magnetic heads.

4.9 Index: The signal generated in the index transducer of the drive by the drive spindle once per revolution.

4.10 initialization: Writing any information initially required to be on the flexible disk cartridge, e.g. the Volume Label, prior to the commencement of general processing use.

4.11 line of access: The straight line described by the centre of the gap of the read/write head as it is positioned from Track 00 to Track 79.

4.12 liner: Suitable material positioned between the case and the disk to provide cleaning action and protection from abrasion.

4.13 Master Standard Reference Flexible Disk Cartridge: A reference flexible disk cartridge selected as the standard for reference fields, signal amplitudes, resolution, peak shift, and reference erase field. Track 00 and Track 79 on both sides are declared as reference tracks.

The reference tracks are calibrated at 300 r/min.

NOTE 1 - This Master Standard has been established by the Physikalisch-Technische Bundesanstalt (PTB), Bundesallee 100, D-3300 Braunschweig, Germany.

4.14 Reference Erase Field: The Reference Erase Field is the DC field which causes an eraseability of 5 % when measured for the Master Standard Reference Flexible Disk Cartridge.

There are two Reference Erase Fields, one for each side.

4.15 Reference Field: The Reference Field is the Typical Field of the Master Standard Reference Flexible Disk Cartridge. There are two Reference Fields, one for each side.

4.16 Secondary Standard Reference Flexible Disk Cartridge: A flexible disk cartridge the performance of which is known and stated in relation to that of the Master Standard Reference Flexible Disk Cartridge.

NOTE 2 - Secondary Standard Reference Flexible Disk Cartridges can be ordered from PTB, Lab. 1.41, under Part Number RM 10994 until the year 2001.

It is intended that these be used for calibrating tertiary cartridges for use in routine calibration.

Copyright International Organization for Standardization
Provided by IHS under license with ISO
No reproduction or networking permitted without license from IHS
Not for Resale

4.17 shutter: A device which uncovers the head window upon insertion, and automatically covers them upon removal from the drive.

4.18 Side: Side 0 is the side engaged by the spindle. Side 1 is the opposite side.

4.19 Standard Reference Amplitude: The Standard Reference Amplitudes (SRAs) are the Average Signal Amplitudes derived from the reference tracks of the Master Standard Reference Flexible Disk Cartridge using the Test Recording Current.

There are four SRAs, two for each side:

SRA-1*f* is the Average Signal Amplitude from a recording written using 1*f* at Track 00.

SRA-2*f* is the Average Signal Amplitude from a recording written using 2*f* at Track 79.

4.20 Test Erase Current: The erase current between 148 % and 152 % of the erase current which produces the Reference Erase Field at test frequency 1*f* on track 00.

4.21 Test Recording Current: The current between 198 % and 202 % of the current which produces the Reference Field at 2*f* on Track 79. There are two Test Recording Currents, one for each side.

4.22 Typical Field: The minimum recording field which, when applied to a flexible disk cartridge, causes an average signal amplitude equal to 95 % of the maximum Average Signal Amplitude when taken as a function of the recording field at the specified track and flux transition density.

5 General description

5.1 Drawings

In the enclosed drawings:

- Figure 7 shows side 0 and enlarged cross-sections through the location holes;
- Figure 8 shows Side 1;
- Figure 9 shows at a larger scale the upper part of Side 0 without shutter;
- Figure 10 shows the disk with hub;
- Figure 11 shows the interface between the cartridge and the drive.

5.2 Main elements

The main elements of the flexible disk cartridge are

- the disk,
- the liner,
- the case.

5.3 Description

The cartridge is of a substantially square form. It includes a central hole on one side, a head window on both sides, an identification hole and a write-inhibit hole.

The liner is provided between the case and the disk. It comprises two layers of material between which the disk lies.

The disk has a central hole with a metal hub attached.

Copyright International Organization for Standardization
Provided by IHS under license with ISO
No reproduction or networking permitted without license from IHS
Not for Resale

Section 2 - Environments, mechanical and physical characteristics

6 General requirements

6.1 Environment and transportation

6.1.1 Testing environment

Tests and measurements made on the cartridge to check the requirements of this International Standard shall be carried out under the following conditions:

temperature	: 23 °C ± 2 °C
relative humidity	: 40 % to 60 %
conditioning before testing	: 24 h minimum

For the tests specified in 9.3 the temperature and the relative humidity shall be measured in the air immediately surrounding the cartridge drive. For all other tests the temperature and the relative humidity shall be measured in the air immediately surrounding the cartridge.

The stray magnetic field at any point on the disk surface, including that resulting from the concentrating effect of the recording head, shall not exceed 4 000 A/m.

6.1.2 Operating environment

Cartridges used for data interchange shall be operated under the following conditions:

temperature	: 10 °C to 51,5 °C
relative humidity	: 20 % to 80 %
wet bulb temperature	: less than 29 °C

The temperature and the relative humidity shall be measured in the air immediately surrounding the cartridge. It is recommended that the rate of change of the temperature should not exceed 20 °C per hour. It is also recommended that the temperature and the relative humidity conditions when reading a cartridge are not at the opposite extremes to the conditions when it was recorded.

There shall be no deposit of moisture on or in the cartridge.

The stray magnetic field at any point on the disk surface, including that resulting from the concentrating effect of the recording head, shall not exceed 4 000 A/m.

6.1.3 Storage environment

During storage the cartridges shall be kept within the following conditions:

temperature	: 4 °C to 53 °C
relative humidity	: 8 % to 90 %

The ambient stray magnetic field shall not exceed 4 000 A/m. There shall be no deposit of moisture on or in the cartridge.

NOTE 3 - Cartridges which have been stored at temperatures and humidities exceeding the operating conditions may exhibit degraded performance characteristics. Such cartridges should be subjected to a conditioning period of not less than 24 h within the operating environment prior to use.

6.1.4 Transportation

Responsibility for ensuring that adequate precautions are taken during the transportation shall be with the sender. The cartridge shall be in a protective package free from dust or extraneous matter. It is recommended that a

Copyright International Organization for Standardization
Provided by IHS under license with ISO
No reproduction or networking permitted without license from IHS
Not for Resale

sufficient space exists between cartridge and outer surface of the final container, so that risk of erasure due to stray magnetic fields will be negligible.

It is recommended that the following conditions are not exceeded:

temperature	: -40 °C to 60 °C
maximum rate of temperature change	: 20 °C per hour
relative humidity	: 8 % to 90 %

There should be no deposit of moisture on or in the cartridge.

6.2 Materials

6.2.1 Case

The case may be constructed from any suitable material such that it meets the requirements of 7.7.

6.2.2 Liner

The material of the liner shall be able to retain dust or debris without damage to the disk.

6.2.3 Disk

The disk may be constructed from any suitable material (e.g. bi-axially oriented polyethylene terephthalate) coated on both sides with a flexible layer of magnetic material (e.g. barium ferrite).

6.2.4 Hub

The hub shall be made of any suitable material (e.g. stainless steel alloy according to ISO 683-13, type 8).

7 Dimensional characteristics

The dimensions of the cartridge are referred to two Reference Axes X and Y. They are two lines in space intersecting at right angles. The plane they define is the Reference Plane XY of the cartridge.

7.1 Case

7.1.1 Shape (figure 7)

The case has a rectangular form, its sides shall be

$$L_1 = 94{,}0 \text{ mm} \pm 0{,}3 \text{ mm}$$

$$L_2 = 90{,}0 \text{ mm} \begin{matrix} +\ 0{,}4 \\ -\ 0{,}1 \end{matrix} \text{ mm}$$

The radius of three of its corners shall be

$$R_1 = 2{,}0 \text{ mm} \pm 1{,}0 \text{ mm}$$

The angle of its fourth corner shall be

$$\omega = 45° \pm 2°$$

7.1.2 Thickness

In the area extending 8,5 mm from each of the two edges as shown in figure 8, the thickness of the case shall be

$$E_1 = 3{,}3 \text{ mm} \pm 0{,}2 \text{ mm}$$

When the cartridge is inserted in the test gauge specified in annex G, a force of 0,2 N maximum, applied to the centre of the back edge shall cause the cartridge to pass through the gauge.

Copyright International Organization for Standardization
Provided by IHS under license with ISO
No reproduction or networking permitted without license from IHS
Not for Resale

The edge radius shall be

R_2 = 0,40 mm ± 0,25 mm

7.1.3 Hub access hole (figure 7)

On Side 0 there shall be a hub access hole the diameter of which shall be

D_1 = 26,50 mm min.

The position of the centre of this hole shall be defined by

L_3 = 40,00 mm ± 0,15 mm

L_4 = 31,00 mm ± 0,15 mm

7.1.4 Locating holes (figures 7 and 9)

7.1.4.1 Primary locating hole

The centre of the primary locating hole shall be at the intersection of Reference Axes X and Y.

Its diameter shall be

D_2 = 3,6 mm ± 0,1 mm

The dimensions of its section (see cross-section A-A in figure 7) shall be

D_3 = 1,5 mm min.

L_8 = 0,2 mm ± 0,1 mm

L_9 = 1,0 mm min.

L_{10} = 2,5 mm min.

7.1.4.2 Secondary locating hole

The centre of the secondary locating hole shall be on Reference Axis X, its distance from Reference Axis Y shall be

L_5 = 80,0 mm ± 0,2 mm

It shall have a substantially rectangular shape. Its short axis shall be (cross-section B-B in figure 7)

L_6 = 3,6 mm ± 0,1 mm

Its long axis shall be

L_7 = 4,4 mm ± 0,2 mm

The dimensions D_3, L_8, L_9 and L_{10} of the cross-section of the secondary locating hole are as specified in 7.1.4.1.

7.1.5 Label area

7.1.5.1 Side 0 (figure 7)

The locations and dimensions of the label area of Side 0 shall be defined by

L_{11} = 3,5 mm min.

L_{12} = 76,5 mm max.

L_{14} = 60,0 mm min.

7.1.5.2 Side 1 (figure 8)

The locations and dimensions of the label area of Side 1 shall be defined by

L_{11} = 3,5 mm min.

Copyright International Organization for Standardization
Provided by IHS under license with ISO
No reproduction or networking permitted without license from IHS
Not for Resale

L_{12} = 76,5 mm max.

L_{13} = 20,0 mm min.

7.1.6 Head windows (figure 9)

The locations and the dimensions of the two head windows are specified by the same set of dimensions.

7.1.6.1 Location

The location of the head windows shall be defined by

L_{15} = 12,3 mm min.

L_{16} = 11,5 mm min.

L_{17} = 35,5 mm ± 0,2 mm

7.1.6.2 Dimensions

The width of the head windows shall be

L_{18} = 9,00 mm ± 0,20 mm

The radius of their corners shall be

R_3 = 0,5 mm ± 0,1 mm

The radius of their upper edge shall be

R_4 = 0,5 mm ± 0,1 mm

7.1.7 Write-inhibit hole (figure 8)

7.1.7.1 Location

The centre of the write-inhibit hole shall be on Reference Axis Y. Its distance from Reference Axis X shall be

L_{19} = 67,75 mm ± 0,25 mm

7.1.7.2 Dimensions

The dimensions of the write-inhibit hole shall be

L_{20} = 3,5 mm min.

L_{21} = 4,0 mm min.

7.1.7.3 Use

The write-inhibit hole is intended for use either with a mechanical switch or with an optical detector so that only when the hole is covered is writing on the disk possible. When covered, the closure device shall not extend outside the Reference Plane nor shall it deflect by more than 0,3 mm from the Reference Plane inside the case under the action of a force of 3 N.

Also when covered, the light transmittance of the write-inhibit hole area shall not exceed 1 %, when measured with an optical system as described in annex B.

7.1.8 Identification hole (figures 7 and 8)

The identification hole is provided to distinguish between the flexible disk cartridge specified by this International Standard from those specified by ISO 8860 and ISO/IEC 9529.

NOTE 4 - As no specification is given in ISO 8860 and ISO/IEC 9529 for the opacity of the case, it is recommended that detection of the identification hole is by mechanical means.

Copyright International Organization for Standardization
Provided by IHS under license with ISO
No reproduction or networking permitted without license from IHS
Not for Resale

7.1.8.1 Location

The position of the centre of the identification hole shall be specified by L_5 and

L_{51} = 62,25 mm ± 0,25 mm

7.1.8.2 Dimensions

The dimensions of the identification hole shall be

L_{49} = 3,5 mm min.

L_{50} = 4,0 mm min.

7.1.9 Profile of the shutter edge of the case (figures 7 and 9)

The edge on which the shutter is mounted shall have a profile defined by the following dimensions:

L_{22} = 80,0 mm ± 0,2 mm

L_{23} = 76,0 mm ± 0,3 mm

L_{24} = 68,0 mm ± 0,3 mm

L_{25} = 64,50 mm ± 0,35 mm

L_{26} = 57,00 mm ± 0,35 mm

L_{27} = 55,5 mm ± 0,6 mm

L_{28} = 3,5 mm min.

L_{29} = 17,5 mm ± 0,2 mm

L_{30} = 17,00 mm ± 0,15 mm

L_{31} = 15,50 mm ± 0,25 mm

L_{45} = 12,50 mm ± 0,25 mm

α = 45° ± 2°

β = 135° ± 2°

ω = 45° ± 2°

7.1.10 Shutter (figures 8 and 9)

The shutter shall slide upon insertion of the cartridge into the drive so as to uncover the head windows, and close automatically upon removal. The maximum resistance force at the fully open position shall be 1 N, and the minimum resistance force at the fully closed position shall be 0,2 N.

The path along which the shutter can slide is defined by L_{25} and L_{28}.

In the open position of the shutter, the distance from its leading edge to the Reference Axis Y shall be

L_{32} = 53,75 mm ± 1,25 mm

The width of the windows of the shutter shall be

L_{33} = 12,0 mm ± 0,2 mm

NOTE 5 - It is a requirement that the drive shall provide a mechanism whereby correct insertion of the cartridge into the drive causes the shutter to slide so as to uncover the head windows.

7.2 Liner

No part of the liner shall protrude by more than 0,2 mm into the head access windows.

Copyright International Organization for Standardization
Provided by IHS under license with ISO
No reproduction or networking permitted without license from IHS
Not for Resale

7.3 Disk (figure 10)

7.3.1 Diameter

The diameter of the disk shall be

D_4 = 85,8 mm ± 0,2 mm

7.3.2 Thickness

The thickness of the disk shall be

E_2 = 0,080 mm ± 0,008 mm

7.4 Hub (figure 10)

The hub shall have a central part and a flange.

7.4.1 Dimensions

The diameter of the central part shall be

$$D_5 = 25{,}00 \text{ mm} \begin{matrix} +\ 0{,}00 \\ -\ 0{,}15 \end{matrix} \text{ mm}$$

The diameter of the flange shall be

D_6 = 31,15 mm max.

The distance from the surface of the central part of the hub to the surface of Side 0 of the disk shall be

L_{34} = 1,36 mm ± 0,10 mm

when measured at a radius R_7

R_7 = 14 mm nominal

7.4.2 Hub orientation holes (figure 10)

The hub shall have two orientation holes. The first one at its centre, the second off centre.

7.4.2.1 First orientation hole

The first orientation hole shall have a square form defined by

L_{35} = 4,00 mm min.

The position of the centre of rotation of the disk is defined by

L_{36} = 1,9955 mm

measured from two sides of the hole. This centre of rotation shall be within 0,5 mm of the geometric centre of the disk.

The radius of the four corners of this hole shall be

R_5 = 1,0 mm ± 0,3 mm

7.4.2.2 Second orientation hole

The position and dimensions of the sides of the rectangular second orientation hole are referred to two radial Reference Lines A and B that are perpendicular to each other. Their positions shall be specified by

γ = 15° ± 3°

The length of the sides of this hole shall be

L_{37} = 8,0 mm ± 0,3 mm

Copyright International Organization for Standardization
Provided by IHS under license with ISO
No reproduction or networking permitted without license from IHS
Not for Resale

L_{38} = 4,5 mm min.

These sides shall be parallel to lines A and B, respectively, at a distance:

L_{39} = 2,0 mm ± 0,2 mm

L_{40} = 10,00 mm ± 0,15 mm

The radius of one corner of this hole shall be

R_6 = 2,0 mm ± 0,1 mm

The radius of the three other corners shall be

R_5 = 1,0 mm ± 0,3 mm

7.5 Optional handling notches (figures 7 and 8)

Two handling notches are permitted. If present they shall satisfy the following requirements.

Their centres shall be on a line parallel to, and lying above, Reference Axis X at a distance

L_{41} = 7,50 mm ± 0,15 mm

Their dimensions shall be

L_{42} = 3,0 mm min.

L_{43} = 4,2 mm ± 0,2 mm

Their depth below the Reference Plane shall be

L_{44} = 2,0 mm min.

7.6 Interface between cartridge and drive

When the cartridge is inserted into the drive, the drive spindle engages the cartridge as shown in figure 11. The hub is held against the drive spindle by means of a magnetic attraction force. When in this position the distance between the hub surface on Side 0 and plane XY shall be

L_{46} = 0,3 mm nominal

The inside dimensions of the case on Side 1 shall be

D_7 = 7,0 mm min.

E_3 = 1,3 mm ± 0,1 mm

with the exception of the annular zone defined by L_{47} and L_{48} where the thickness shall be

E_4 = 2,5 mm max.

L_{47} shall be sufficiently large to ensure that the circumference of the disk shall not touch the inside edges of the case. The value of L_{47} specified below is a recommended value therefore it is stated without tolerance.

L_{47} = 22,6 mm

L_{48} = 21,7 mm ± 0,2 mm

7.7 Compliance

When the cartridge is constrained in the manner described in annex A, the cartridge shall be in contact with posts P1 to P4.

Copyright International Organization for Standardization
Provided by IHS under license with ISO
No reproduction or networking permitted without license from IHS
Not for Resale

8 Physical characteristics

8.1 Flammability

The disk, case and liner components shall be made from materials that, if ignited from a match flame, do not continue to burn in a still carbon dioxide atmosphere.

8.2 Coefficient of linear thermal expansion of the disk

The coefficient of thermal expansion of the disk shall be

$(17 \pm 8) \times 10^{-6}$ per °C

8.3 Coefficient of linear hygroscopic expansion of the disk

The coefficient of hygroscopic expansion of the disk shall be

$(0 \text{ to } 15) \times 10^{-6}$ per percent of relative humidity

8.4 Torque

8.4.1 Starting torque

The starting torque, without the heads loaded, shall not exceed 0,006 N·m.

8.4.2 Running torque without heads loaded

The torque necessary to turn the disk shall be in the range 0,000 5 N·m to 0,002 5 N·m when the cartridge is in operation at a speed of 300 r/min ± 3 r/min.

Section 3 - Unrecorded flexible disk cartridge

9 Magnetic characteristics

9.1 Recording area

On each side the magnetic properties specified shall be uniform in the recording area, which shall be the area limited by two radii:

20,6 mm max.
42,0 mm min.

9.2 Track geometry

9.2.1 Number of tracks

In the recording area there shall be 80 discrete concentric tracks on each side of the disk. The distance between centrelines of adjacent tracks shall be 0,187 5 mm.

9.2.2 Width of tracks

The width of a recorded track shall be

0,115 mm ± 0,008 mm

The method of measuring effective track width is given in annex C.

9.2.3 Track location

9.2.3.1 Nominal locations

The nominal radius (R_n) of the centrelines of all tracks shall be calculated by using the formula:

$$R_n = x - 0{,}187\,5\,n$$

where n is the track number, n = 00 to 79.

Copyright International Organization for Standardization
Provided by IHS under license with ISO
No reproduction or networking permitted without license from IHS
Not for Resale

x = 39,500 0 mm for Side 0
x = 38,000 0 mm for Side 1

9.2.3.2 Track location tolerance

For testing purposes the centrelines of the recorded tracks shall be within ± 0,020 mm of the nominal positions, when measured in the testing environment (6.1.1).

9.2.3.3 Line of access of the read/write heads

The line of access of the read/write heads is a line parallel to a radial line and spaced 0,35 mm from it (see 10.3).

9.2.4 Track number

The track number shall be a two-digit decimal number (from 00 to 79) for each side. It identifies the tracks consecutively, starting at the outermost track (00).

9.3 Functional testing

For the purpose of the following tests the same drive unit (see annex J) shall be used for writing and reading operations, both for the disk under test and for the Secondary Standard Reference Flexible Disk Cartridge. The in-contact condition shall be used.

In order to reduce the measurement uncertainty, it is recommended that there be a consistent number of revolutions between consecutive write and read operations.

The drive shall have a combined head consisting of an erase head and a read/write head. The erase head shall be located ahead of the read/write head, so that it erases previously written data before the new data is written by the read/write head. The gap width of the erase head shall be larger than that of the read/write head, to prevent previously written data from being left on either side of the newly written data.

The Test Recording Current and the Test Erase Current shall be determined according to the method specified in annex K.

Unless otherwise specified, when writing the new data, the previously written data shall be simultaneously erased by the erase head.

9.3.1 Surface tests

The magnetic properties of both surfaces are defined by the testing requirements given below.

9.3.1.1 Test conditions

The disk shall be tested at 300 r/min ± 3 r/min. The test frequencies, expressed in flux transitions per second (ftps), shall be:

$1f$ = 500 000 ftps ± 500 ftps
$2f$ = 1 000 000 ftps ± 1 000 ftps

The frequency(ies) to be used is(are) specified for each test.

9.3.1.2 Typical field

The Typical Field of the disk under test shall be between 80 % and 120 % of the Reference Field. It shall be measured using $2f$ on Track 79 on both sides.

9.3.1.3 Average Signal Amplitude

When the disk under test has been recorded with the Test Recording Current, then read back and compared with the Secondary Standard Reference Flexible Disk Cartridge recorded under the same conditions, the Average Signal Amplitude shall be

Track 00, using $1f$: less than 130 % of SRA-$1f$,
Track 79, using $2f$: more than 80 % of SRA-$2f$.

Copyright International Organization for Standardization
Provided by IHS under license with ISO
No reproduction or networking permitted without license from IHS
Not for Resale

This test shall be performed on both sides.

9.3.1.4 Resolution

After recording on Track 79, using the Test Recording Current, the ratio

$$\frac{\text{Average Signal Amplitude using } 2f}{\text{Average Signal Amplitude using } 1f} \times 100\ \%$$

shall be greater than 80 % of the same ratio for the Master Standard Reference Flexible Disk Cartridge.

This test shall be performed on both sides.

9.3.1.5 Peak shift

The average peak shift measured on the disk cartridge under test, using the method specified in annex H, shall be within the range 63 % to 137 % of that of the Master Standard Reference Flexible Disk Cartridge when measured on RM 10994 under the same conditions. This test shall be performed on Track 79 on both sides.

9.3.1.6 Eraseability

AC bulk erase the disk under test. On Track 00 record at $1f$ using the Test Recording Current for one revolution. Erase for one revolution using the Test Erase Current with the read/write head turned off.

The ratio

$$\frac{\text{Residual Average Signal Amplitude after erasing}}{\text{Average Signal Amplitude after first recording using } 1f} \times 100\ \%$$

shall be less than 3 %.

This test shall be performed on both sides, and a frequency-selective voltmeter or a similar device with a bandwidth of 3 kHz to 5 kHz, and with a signal-to-noise ratio of at least 10 dB referred to the 3 % value shall be used. Both the numerator and the denominator shall be determined using this device.

9.3.1.7 Modulation

Modulation shall be

$$\frac{\text{Maximum mean - Minimum mean}}{\text{Maximum mean + Minimum mean}} \times 100\ \%$$

The maximum mean shall be the average value of the amplitude modulated output voltage in that part of the track with the maximum amplitudes, and the minimum mean shall be that in the respective part with the minimum amplitudes. Output voltage shall be measured peak-to-peak; averaging shall be done over about 2 000 consecutive flux transitions.

On Track 00 using $1f$ and on Track 79 using $2f$, modulation shall be less than 10 %.

This test shall be performed on both sides.

9.3.2 Track quality tests

These tests shall apply to all 80 tracks at the defined positions on each side. The appropriate Test Recording Current shall be used.

9.3.2.1 Missing pulse

Write a track with $2f$ and measure the Average Signal Amplitude. Any playback signal which, when measured base-to-peak, is less than 45 % of half the Average Signal Amplitude of the track, shall be a missing pulse.

Copyright International Organization for Standardization
Provided by IHS under license with ISO
No reproduction or networking permitted without license from IHS
Not for Resale

9.3.2.2 Extra pulse

Write a track with $2f$ and measure the Average Signal Amplitude. Then erase the track for one revolution with a direct current equal to the quiescent value of the Test Recording Current applied to the read/write head and the Test Erase Current applied to the erase head. The polarity of the magnetic field produced by the read/write head shall be the same as that produced by the erase head. Any playback signal which, when measured base-to-peak, exceeds 20 % of half the Average Signal Amplitude shall be an extra pulse.

9.3.3 Rejection criterion

9.3.3.1 Defective track

A track on which one or more missing and/or extra pulses are detected in the same position(s) on consecutive passes shall be a defective track. The applicable number of consecutive passes shall be a matter for agreement between purchaser and supplier.

9.3.3.2 Requirement for tracks

As initially received from the medium supplier, the cartridge shall have no defective tracks.

9.3.3.3 Rejected cartridge

A cartridge which does not meet the requirements of 9.3.3.2 shall be rejected.

Section 4 - Recording method and track format

10 General requirements

10.1 Mode of recording

The mode of recording shall be Modified Frequency Modulation (MFM) for which the conditions are:

- a flux transition shall be written at the centre of each bit cell containing a ONE,
- a flux transition shall be written at each cell boundary between consecutive bit cells containing ZEROs.

Exceptions to this are defined in 10.12.

10.2 Track location tolerance of the recorded flexible disk cartridge

For the purpose of this Section, the nominal track locations specified in 9.2.3.1 require compensation for the actual temperature using the nominal value of the coefficient of thermal expansion specified in 8.2. Over the range of operating environment specified in 6.1.2, the centrelines of the recorded tracks shall be within ± 0,028 mm of these compensated nominal track locations.

10.3 Recording offset angle (figure 1)

At the instant of writing or reading a magnetic transition, the transition shall have an angle of:

$$\theta = \arcsin\left(\frac{d}{R_n}\right) \pm 0^\circ\ 9'$$

where R_n is the radius through that transition (see 9.2.3.1).

Copyright International Organization for Standardization
Provided by IHS under license with ISO
No reproduction or networking permitted without license from IHS
Not for Resale

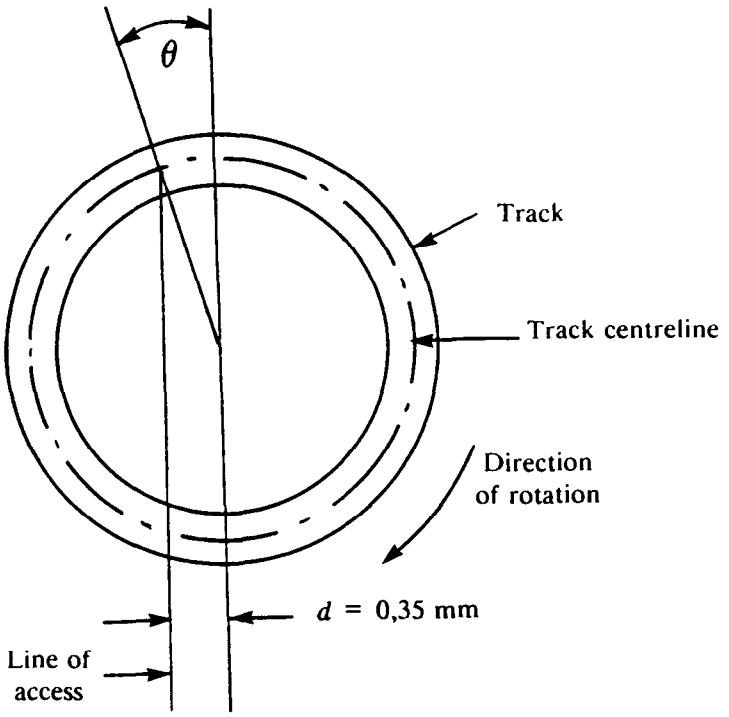

Figure 1 - Recording offset angle

10.4 Density of recording

10.4.1 The nominal density of recording shall be 31 831 ftprad. The resulting nominal bit cell length is 31,4 μrad.

10.4.2 The long-term average bit cell length shall be the average bit cell length measured over a sector. It shall be within ± 3,0 % of the nominal bit cell length.

10.4.3 The short-term average bit cell length, referred to a particular bit cell, shall be the average of the lengths of the preceding eight bit cells. It shall be within ± 8 % of the long-term average bit cell length.

10.5 Flux transition spacing (figure 2)

The instantaneous spacing between flux transitions is influenced by the reading and writing process, the bit sequence (pulse crowding effects) and other factors. The locations of the transitions are defined as the locations of the peaks in the signal when reading. Tests shall be carried out according to annexes D and E.

10.5.1 The spacing between the flux transitions of a sequence of ONEs shall be between 80 % and 120 % of the short-term average bit cell length.

10.5.2 The spacing between the flux transition for a ONE and that between two ZEROs preceding or following it shall be between 130 % and 165 % of the short-term average bit cell length.

10.5.3 The spacing between the flux transitions of two ONEs surrounding a ZERO shall lie between 185 % and 225 % of the short-term average bit cell length.

Copyright International Organization for Standardization
Provided by IHS under license with ISO
No reproduction or networking permitted without license from IHS
Not for Resale

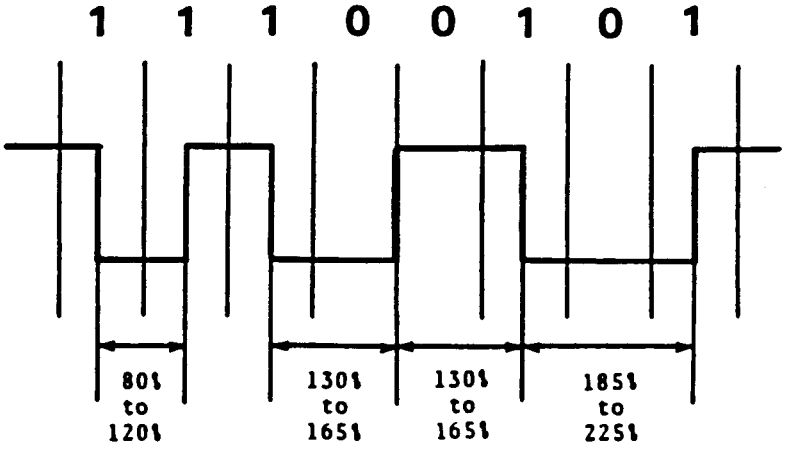

Figure 2 - Flux transition spacings

10.6 Average Signal Amplitude

For each side the Average Signal Amplitude on any track of the interchanged flexible disk cartridge shall be less than 160 % of SRA-1*f* and more than 40 % of SRA-2*f*.

10.7 Byte

A byte is a group of eight bit-positions, identified B_1 to B_8.

The bit in each position is a ZERO or a ONE.

10.8 Sector

All tracks shall be divided into 36 sectors of 512 bytes.

10.9 Cylinder

A pair of tracks, one on each side, having the same track number.

10.10 Cylinder number

The cylinder number shall be a two-digit number identical with the track number of the tracks of the cylinder.

10.11 Data capacity of a track

The data capacity of a track shall be 18 432 bytes.

10.12 Hexadecimal notation

Hexadecimal notation shall be used hereafter to denote the following bytes:

(00) for (B_8 to B_1) = 00000000
(01) for (B_8 to B_1) = 00000001
(02) for (B_8 to B_1) = 00000010
(4E) for (B_8 to B_1) = 01001110
(FE) for (B_8 to B_1) = 11111110
(FB) for (B_8 to B_1) = 11111011
(A1)* for (B_8 to B_1) = 10100001

In byte (A1)* the boundary transition between B_3 and B_4 is missing.

Copyright International Organization for Standardization
Provided by IHS under license with ISO
No reproduction or networking permitted without license from IHS
Not for Resale

10.13 Error Detection Characters (EDC)

The two EDC bytes are hardware-generated by shifting serially the relevant bits, specified later for each part of the track, through a 16-bit shift register described by the generator polynomial:

$$X^{16} + X^{12} + X^5 + 1$$

(See also annex F).

11 Track layout

Formatting of a track shall commence with the occurrence of Index. Index shall occur within 440 µs from the instant at which the Reference Line B (see 7.4.2.2) is parallel to the line of access. During formatting the rotational speed of the disk shall be

- averaged Index-to-Index : 300 r/min ± 1,5 %
- averaged over a sector : 300 r/min ± 3,0 %

After formatting, there shall be 36 sectors on each track. The layout of each track shall be as follows:

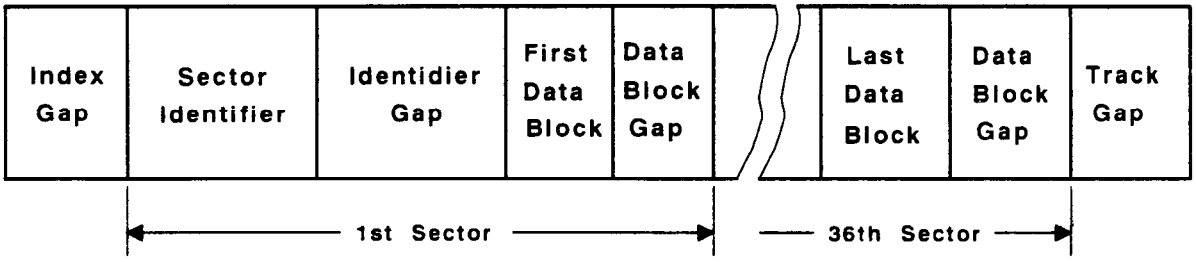

Figure 3 - Track layout

11.1 Index Gap

At nominal density, this field shall comprise 146 bytes of unspecified content (except that there shall be no (A1)*-bytes). Some of the first bytes may have become ill-defined due to overwriting.

11.2 Sector Identifier

The layout of this field shall be as follows:

Sector Identifier							
Identifier Mark			Address Identifier				
			Track Address		S		EDC
12 bytes (00)	3 bytes (A1)*	1 byte (FE)	C 1 byte	Side 1 byte (00) or (01)	1 byte	1 byte (02)	2 bytes

Figure 4 - Sector Identifier

11.2.1 Identifier Mark

This field shall comprise 16 bytes:

Copyright International Organization for Standardization
Provided by IHS under license with ISO
No reproduction or networking permitted without license from IHS
Not for Resale

12 (00)-bytes
3 (A1)*-bytes
1 (FE)-byte

11.2.2 Address Identifier

This field shall comprise 6 bytes.

11.2.2.1 Track Address

This field shall comprise 2 bytes.

a) Cylinder Number (C)

This field shall specify in binary notation the cylinder number from 00 for the outermost cylinder to 79 for the innermost cylinder.

b) Side Number (Side)

This field shall specify the side of the disk. On Side 0, it shall be (00) on all tracks. On Side 1 it shall be (01) on all tracks.

11.2.2.2 Sector Number (S)

The 3rd byte shall specify in binary notation the sector number from 01 for the 1st sector to 36 for the last sector.

The sectors may be recorded in any order of their sector numbers.

11.2.2.3 4th Byte

The 4th byte shall always be a (02)-byte.

11.2.2.4 EDC

These two bytes shall be generated as defined in 10.13 using the bytes of the Sector Identifier starting with the first (A1)*-byte (see 11.2.1) of the Identifier Mark and ending with the 4th byte (see 11.2.2.3) of the Address Identifier.

If the EDC is incorrect the sector is defective. The relevant standard for file structure and labelling specifies the handling of defective sectors.

11.3 Identifier Gap

This field shall comprise 41 initially recorded (4E)-bytes. These bytes may have become ill-defined due to overwriting.

11.4 Data Block

The layout of this field shall be as follows:

Copyright International Organization for Standardization
Provided by IHS under license with ISO
No reproduction or networking permitted without license from IHS
Not for Resale

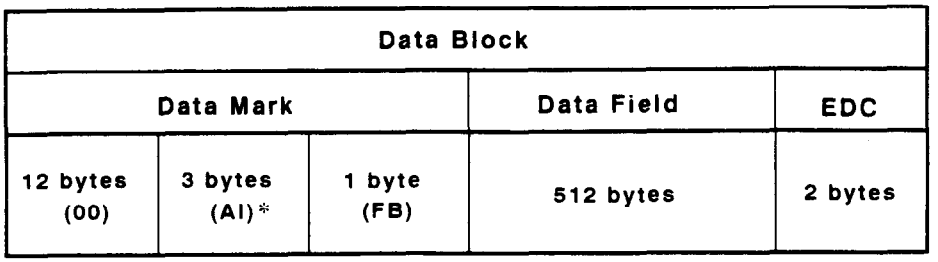

Figure 5 - Data Block

11.4.1 Data Mark

This field shall comprise 16 bytes:

12 (00)-bytes
3 (A1)*-bytes
1 (FB)-byte.

11.4.2 Data Field

This field shall comprise 512 bytes.

If it comprises less than the requisite number of data bytes, the remaining positions shall be filled with (00)-bytes.

11.4.3 EDC

These two bytes shall be generated as defined in 10.13 using the bytes of the Data Block starting with the first (A1)*-byte of the Data Mark and ending with the last byte of the Data Field.

If the EDC is incorrect the sector is defective. The relevant standard for file structure and labelling specifies the handling of defective sectors.

11.5 Data Block Gap

This field shall comprise 83 initially recorded (4E)-bytes. These bytes may have become ill-defined due to overwriting. The Data Block Gap is recorded after each Data Block and it precedes the following Sector Identifier. After the last Data Block, it precedes the Track Gap.

11.6 Track Gap

This field shall follow the Data Block Gap of the last sector. (4E)-bytes are written until Index occurs, unless it has occurred during writing of the last Data Block Gap, in which case there shall be no Track Gap.

12 Coded representation of data

12.1 Byte coding

When the coding method requires it, the Data Field shall be regarded as an ordered sequence of 8-bit bytes.

Within each byte the bit positions shall be identified by B_8 to B_1. The high-order bit shall be recorded in position B_8 and the low-order bit in position B_1. The sequence of recording shall be high-order bit first.

When the data is encoded according to an 8-bit code, the binary weights of the bit positions shall be as shown in figure 6.

Copyright International Organization for Standardization
Provided by IHS under license with ISO
No reproduction or networking permitted without license from IHS
Not for Resale

Bit Position	B_8	B_7	B_6	B_5	B_4	B_3	B_2	B_1
Binary Weight	128	64	32	16	8	4	2	1

Figure 6 - Binary weights

When the data is encoded according to a 7-bit code, bit position B_8 shall contain bit ZERO, and the data shall be encoded in bit positions B_7 to B_1, using the same binary weights as shown above.

12.2 Bit coding

When the coding method requires it, the Data Field shall be regarded as an ordered sequence of bit positions, each containing a bit.

Copyright International Organization for Standardization
Provided by IHS under license with ISO
No reproduction or networking permitted without license from IHS
Not for Resale

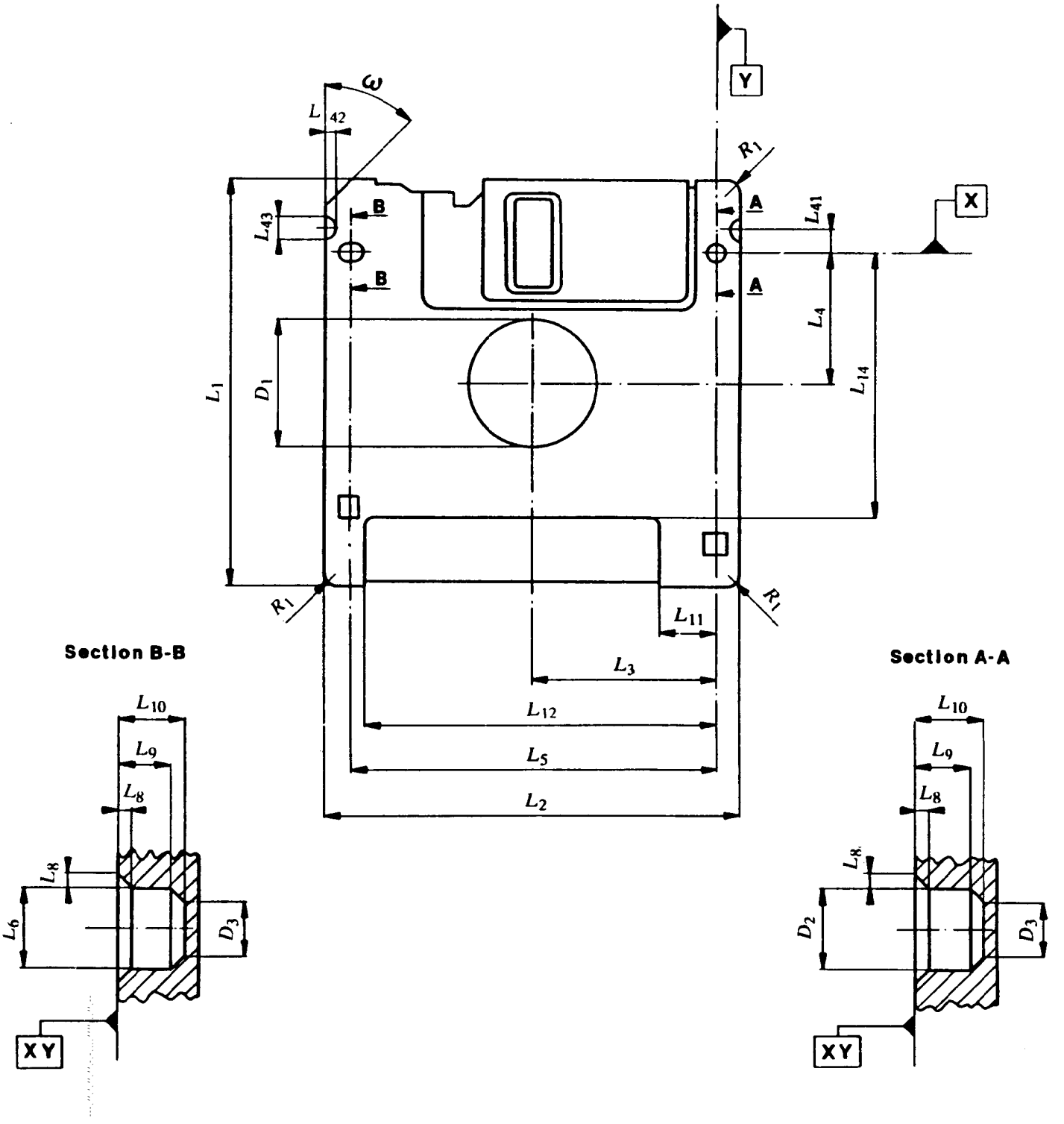

Figure 7 - Side 0

Copyright International Organization for Standardization
Provided by IHS under license with ISO
No reproduction or networking permitted without license from IHS
Not for Resale

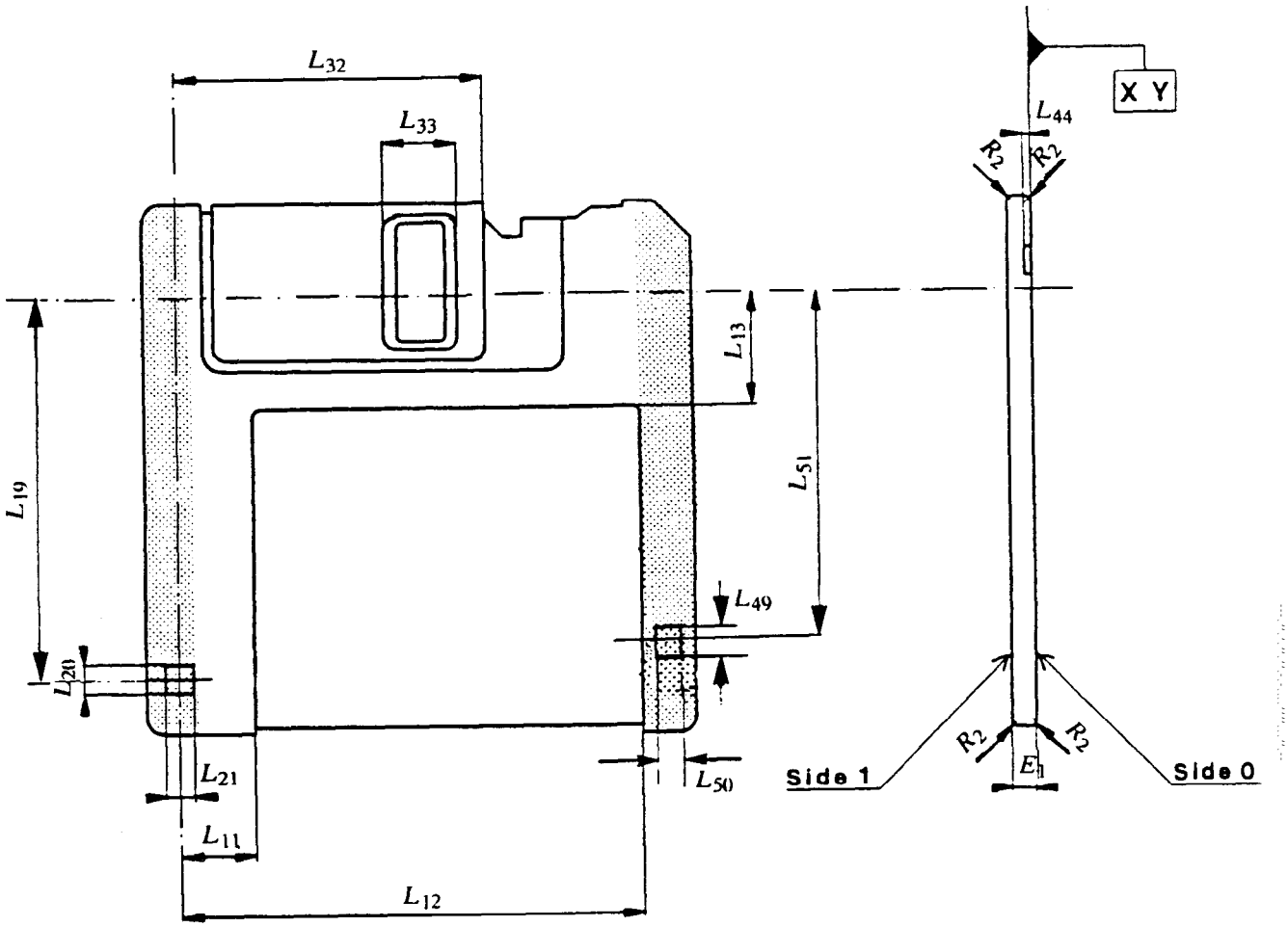

Figure 8 - Side 1

Copyright International Organization for Standardization
Provided by IHS under license with ISO
No reproduction or networking permitted without license from IHS
Not for Resale

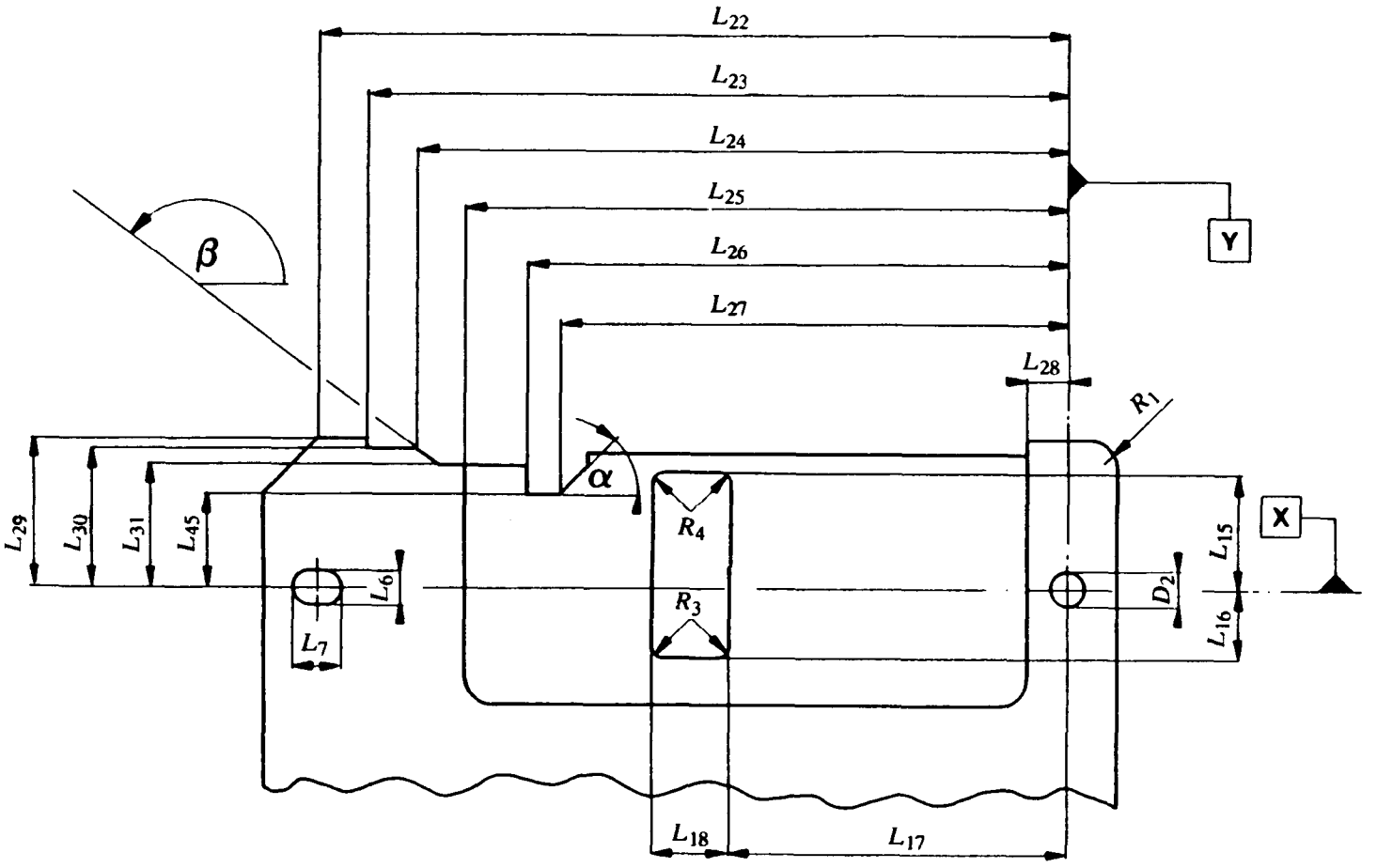

Figure 9 - Side 0, top part

Copyright International Organization for Standardization
Provided by IHS under license with ISO
No reproduction or networking permitted without license from IHS
Not for Resale

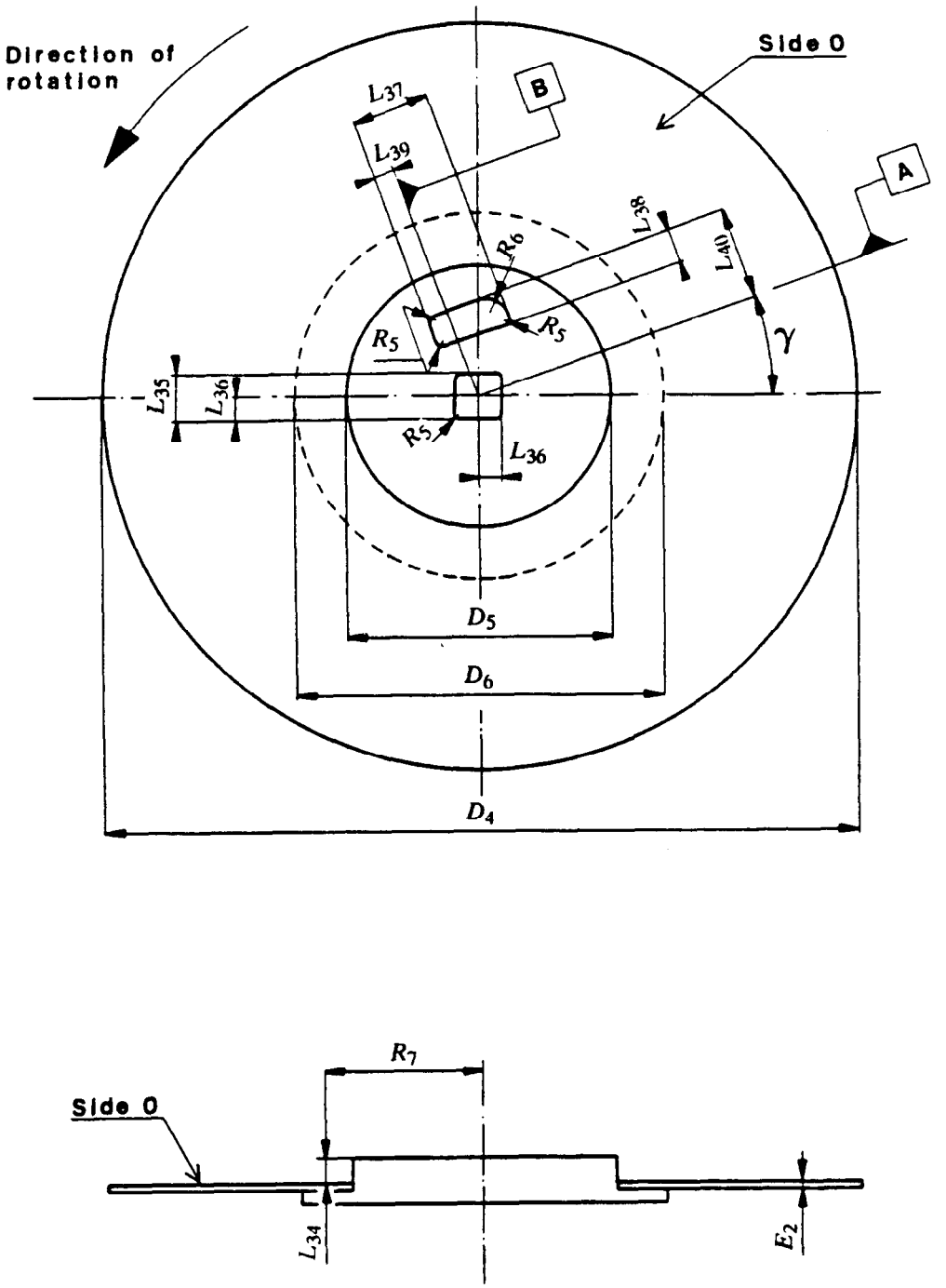

Figure 10 - Disk with its hub

Copyright International Organization for Standardization
Provided by IHS under license with ISO
No reproduction or networking permitted without license from IHS
Not for Resale

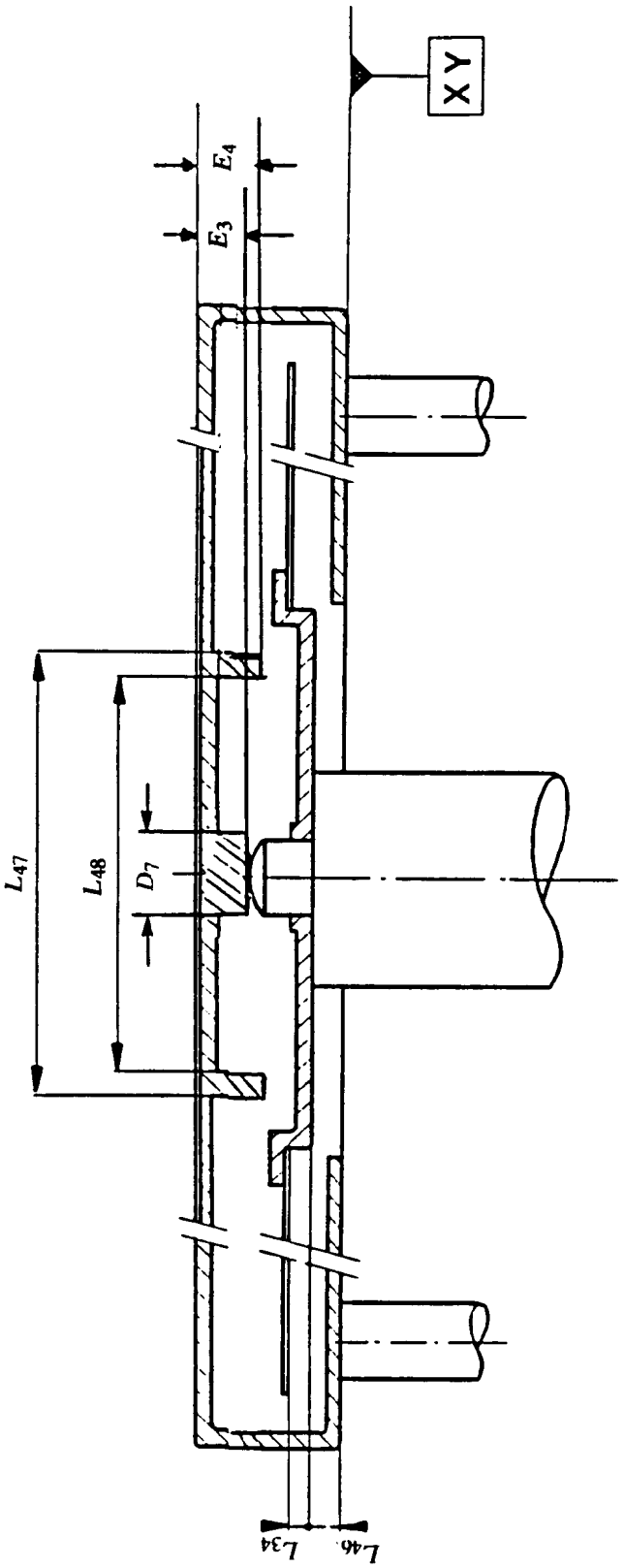

Figure 11 - Cartridge / Drive interface

Not for Resale
Copyright International Organization for Standardization
Provided by IHS under license with ISO
No reproduction or networking permitted without license from IHS

Annex A
(normative)

Test for compliance

A.1 The purpose of this test is to determine whether the cartridge will maintain the proper plane of operation within the drive. This is achieved by supporting the cartridge at defined reference zones and applying forces opposite to the supports.

A.2 The location of the four zones a, b, c, d (figure A.1) is defined by

L_5 = 80,0 mm ± 0,2 mm

L_x = 56,8 mm ± 0,2 mm

Two of these zones, a and b, coincide with the primary and the secondary location holes, respectively.

A.3 The test device (figure A.2) consists of a base plate on which four posts are fixed so as to correspond to the four zones a, b, c, d. Posts P1, P2 correspond to the zones a and b, respectively. Posts P3, P4 correspond to zones c and d, respectively. A fifth post (P5) is mounted in the middle of the plate and corresponds to the drive spindle.

The dimensions of these posts are as follows (figure A.3):

Posts P1, P2

d_1 = 6,00 mm ± 0,01 mm
d_2 = 3,00 mm ± 0,01 mm
h_1 = 1,00 mm max.
h_2 = 2,00 mm max.

Post P5

d_3 = 12,70 mm ± 0,01 mm
d_4 = 3,98 mm ± 0,01 mm

$h_3 = 2{,}20\ ^{+\,0{,}03}_{-\,0{,}00}$ mm

r = 2,5 mm ± 0,3 mm

Posts P3, P4

d_5 = 6,00 mm ± 0,01 mm

After assembly, the upper annular surfaces of posts P1 to P4 shall lie between two horizontal planes spaced 0,02 mm apart.

A.4 The cartridge is laid on these four posts and a vertical, downward force of 0,65 N is exerted simultaneously on each of the four zones.

Copyright International Organization for Standardization
Provided by IHS under license with ISO
No reproduction or networking permitted without license from IHS
Not for Resale

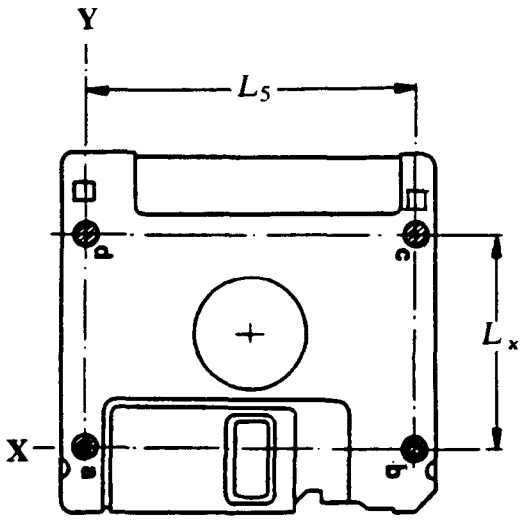

Figure A.1 - Location of the reference zones

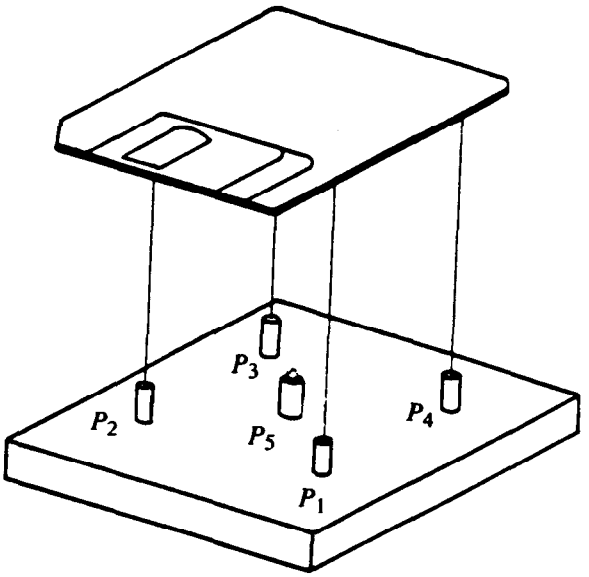

Figure A.2 - Test device

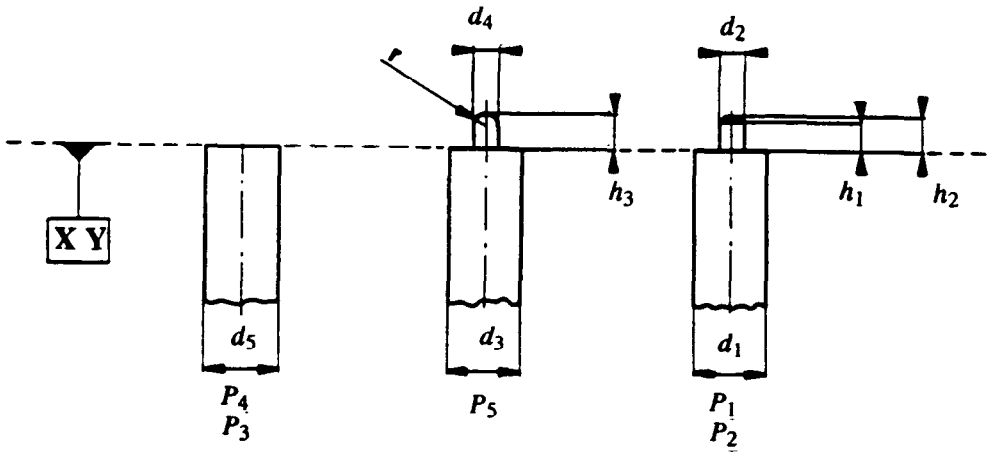

Figure A.3 - Dimensions of the posts

Copyright International Organization for Standardization
Provided by IHS under license with ISO
No reproduction or networking permitted without license from IHS
Not for Resale

Annex B
(normative)

Measurement of light transmittance

B.1 Introduction

The following description outlines the general principle of the measuring equipment and the measuring method to be applied when measuring the radiation (light) transmittance of the write-inhibit hole and the opacity of its cover.

For the purpose of this International Standard "light transmittance" is defined by convention as the relationship between the reading obtained from the test device with the sample inserted and the reading obtained when no sample is present. The transmittance value is expressed as the percentage ratio of the two readings. The essential elements of the measuring equipment are:

- the radiation source
- the photo diode
- the optical path
- the measuring circuitry.

B.2 Description of the measuring equipment

B.2.1 Radiation source

An infra red light-emitting diode (LED) with the following parameters shall be used:

Wavelength at peak emission: 940 nm ± 10 nm

Half-power band width: ± 50 nm

B.2.2 Radiation receiver

A flat silicon photo diode shall be used as the radiation receiver. It shall be operated in the short circuit mode. The active area of the diode shall be equal to, or at the most 20 % larger than, the open area of the aperture. This condition guarantees a linear dependency of the short circuit diode current on the light intensity.

B.2.3 Optical path (figure B.1)

The optical axis of the set up shall be perpendicular to the case (Side 1).

The distance from the emitting surface of the LED to the case shall be

$$l_1 = \frac{3{,}5}{2 \tan \alpha} \text{ mm}$$

where 3,5 mm is the minimum value of dimension L_{20} (see 7.1.7.2).

α is the angle where the relative intensity of the LED equals at least 95 % of the maximum intensity on the optical axis.

The aperture shall have a thickness of 1,2 mm to 1,4 mm and a diameter given by

$$D = (2\, l_2 \tan \alpha) \text{ mm}$$

$$l_2 = (l_1 + 1{,}5) \text{ mm}$$

Copyright International Organization for Standardization
Provided by IHS under license with ISO
No reproduction or networking permitted without license from IHS
Not for Resale

Its surfaces shall be matt black. The whole device should be enclosed within a light-tight casing.

B.2.4 Measuring circuitry

Figure B.2 shows the recommended circuitry with the following components:

E	: regulated power supply with variable output voltage
R	: current-limiting resistor
LED	: light-emitting diode
D_i	: Si photo diode
A	: operational amplifier
R_{f0}, R_{f1}	: feedback resistors
S	: gain switch
V	: voltmeter

The forward current of the LED and consequently its radiation power can be varied by means of the power supply E. D_i is working in the short circuit mode. The output voltage of the operational amplifier is given by

$$V_0 = I_k \times R_f$$

and is therefore a linear function of the light intensity. I_k is the short circuit current of D_i.

R_{f0} and R_{f1} shall be low-temperature drift resistors with an accuracy of 1 %. The following ratio applies:

$$\frac{R_{f0}}{R_{f1}} = \frac{1}{50}$$

B.3 Measuring method

The measurements shall be taken with the case in a fixed position.

- S is set to position 0. With the write-inhibit hole open in front of the photo diode. The voltmeter is set to full-scale reading (100 % transmittance) by varying the output voltage of E.
- The write-inhibit hole is then covered. S is set to position 1. Full deflection of the voltmeter now represents 2 % transmittance.

Copyright International Organization for Standardization
Provided by IHS under license with ISO
No reproduction or networking permitted without license from IHS
Not for Resale

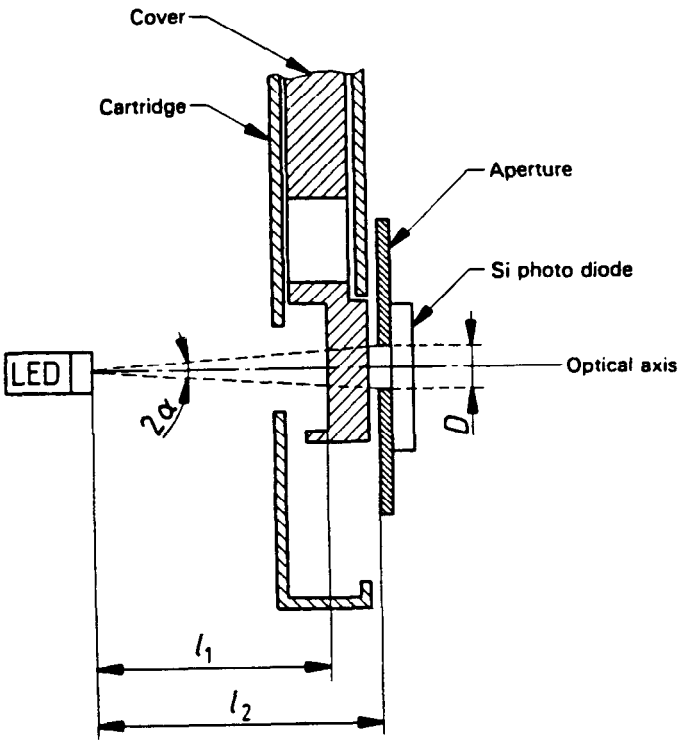

Figure B.1 - Measuring device

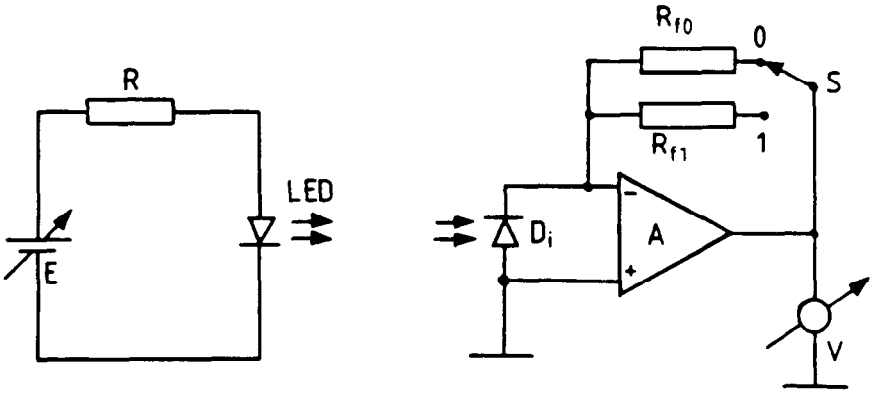

Figure B.2 - Electronic circuitry

Copyright International Organization for Standardization
Provided by IHS under license with ISO
No reproduction or networking permitted without license from IHS
Not for Resale

Annex C
(normative)

Method for measuring the effective track width

Erase a 7-track wide band. Record a 500 000 ftps frequency pattern in a track centred in the middle of the erased band, with the erase head active.

For reading use a head the gap width of which is wider than the expected track width. Move this head radially over the disk in increments not greater than 0,01 mm across the track. Determine the read back signal amplitude for each incremental move and plot its amplitude versus displacement. See figure C.1 below for reading the haif track widths A and B. The total effective track width is the sum of A and B.

Repeat the test to ensure that no thermal or hygroscopic effects have taken place during the measurement.

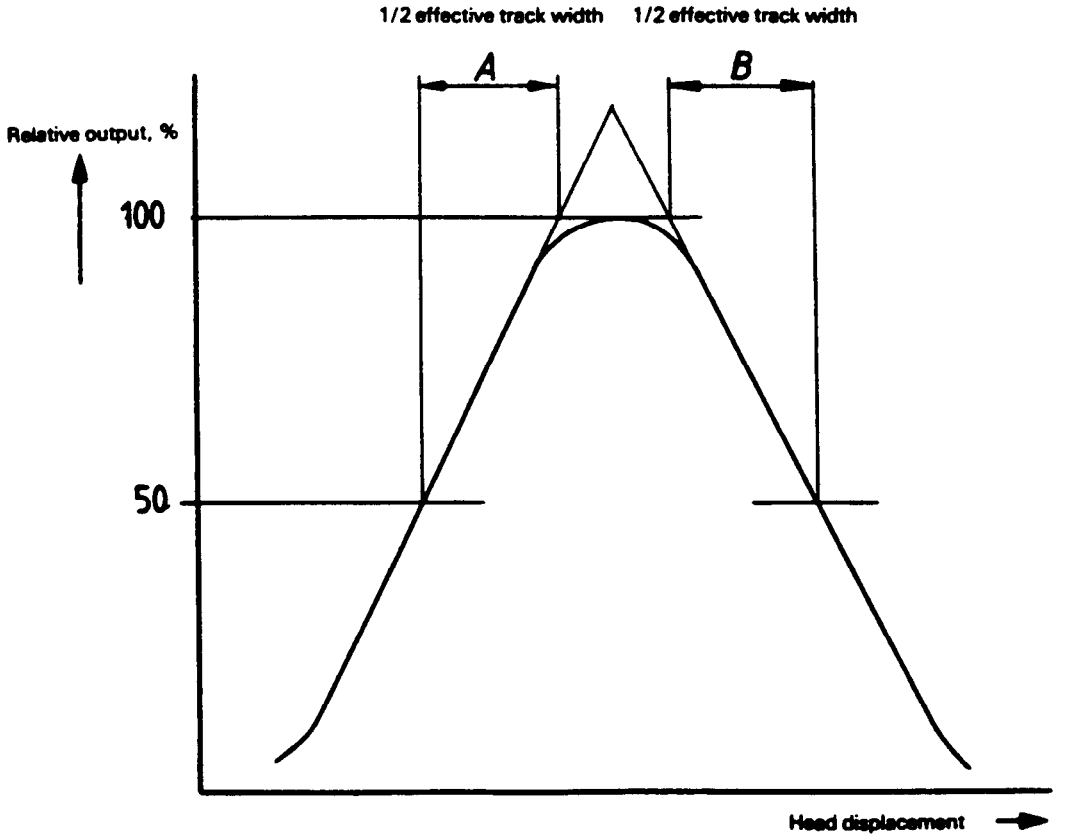

Figure C.1 - Effective track width

Copyright International Organization for Standardization
Provided by IHS under license with ISO
No reproduction or networking permitted without license from IHS
Not for Resale

Annex D
(normative)

Procedure and equipment for measuring flux transition spacing

D.1 General

This annex specifies equipment and the procedure for measuring flux transition spacing of data recorded for data interchange on a 90 mm flexible disk cartridge using MFM recording at 31 831 flux transitions per radian on both sides.

D.2 Test equipment

D.2.1 Disk drive

The disk drive shall have a rotational speed of 300 r/min ± 3 r/min averaged over one revolution. The average angular speed taken over 32 μs shall not deviate by more than 0,5 % from the speed averaged over one revolution.

D.2.2 Head

The head shall be as specified in annex J, with the exception that the tolerance for the offset angle (see J.2.1.3) shall be 0° ± 3' (instead of 0° ± 9').

D.2.3 Read channel

The read channel shall be as specified in annex J. Peak sensing shall be carried out by a differentiating and limiting amplifier.

D.2.4 Time interval measuring resolution

The time interval counter shall be able to measure time intervals from 0,5 μs to 2,5 μs with at least 5 ns resolution.

A triggering oscilloscope may be used for this purpose.

D.3 Procedure for measurement

D.3.1 Flux transition spacing measurement

The flux transition spacings shall be measured by measuring the time intervals between successive peaks in the read signal for 10^5 intervals of random sampling on a track, and plotting logarithmically the distribution of the time intervals as shown below.

The measurements shall be made at the output of the read amplifier specified in D.2.3.

D.3.2 Flux transition spacing for all tracks

Measurement of time intervals t_1 to t_6 shall be as shown below.

t_2/t_0 and t_1/t_0 (x 100 %) correspond to 10.5.1

t_4/t_0 and t_3/t_0 (x 100 %) correspond to 10.5.2

t_6/t_0 and t_5/t_0 (x 100 %) correspond to 10.5.3.

t_0 is the short-term average bit cell length = 1 μs nominal.

Intervals which are out of specification due to data block splicings or index splicing may be neglected.

Copyright International Organization for Standardization
Provided by IHS under license with ISO
No reproduction or networking permitted without license from IHS
Not for Resale

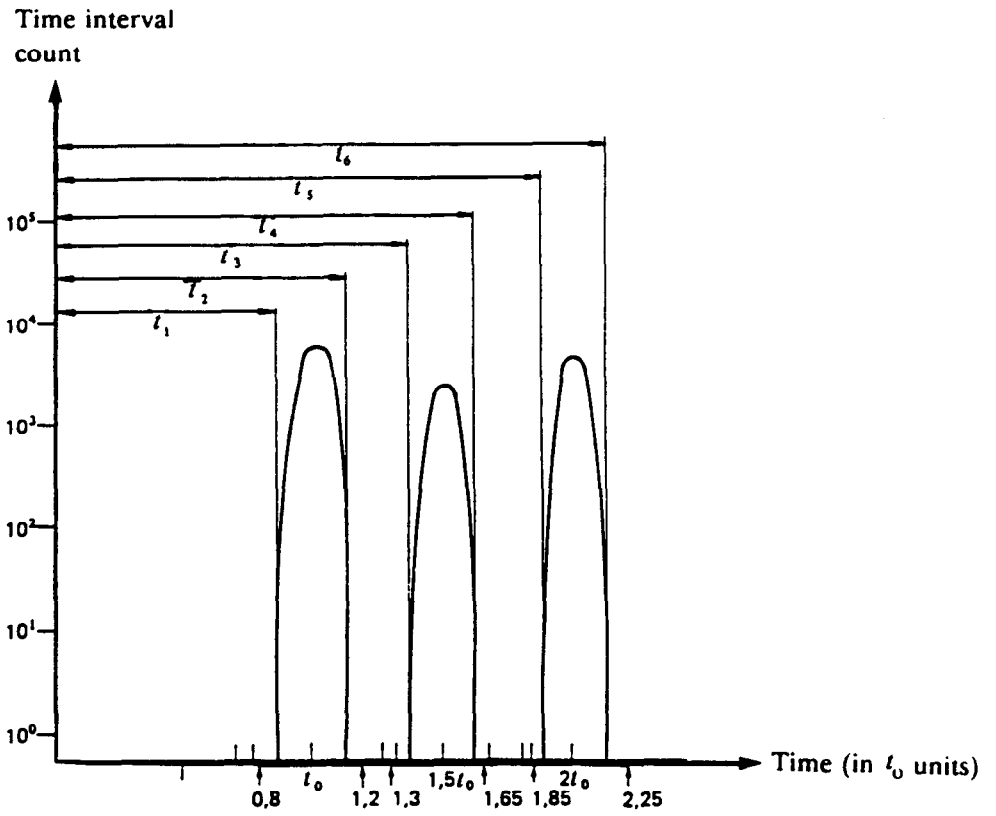

Figure D.1 - Flux transition spacing distribution

Copyright International Organization for Standardization
Provided by IHS under license with ISO
No reproduction or networking permitted without license from IHS
Not for Resale

Annex E
(informative)

Data separators for decoding MFM recording

The MFM recording method gives nominal flux transition spacings of

t for the patterns 111 or 000

$3t/2$ for the patterns 100 or 001

$2t$ for the pattern 101

The data separator should be capable of resolving a difference of only 1 µs. To achieve this with a low error rate, the data separator cannot operate on a fixed period but should follow changes in the bit cell length.

It is recognized that various techniques may be developed to achieve dynamic data separation; with present technology only a data separator based on a phase-locked oscillator can provide the necessary reliability.

Copyright International Organization for Standardization
Provided by IHS under license with ISO
No reproduction or networking permitted without license from IHS
Not for Resale

Annex F
(informative)

EDC implementation

Figure F.1 shows the feedback connections of a shift register which may be used to generate the EDC bytes.

Prior to the operation, all positions of the shift register are set to ONE. Input data are added (exclusive OR) to the contents of position C_{15} of the register to form a feedback. This feedback is in its turn added (exclusive OR) to the contents of position C_4 and position C_{11}.

On shifting, the outputs of the exclusive OR gates are entered respectively into positions C_0, C_5 and C_{12}. After the last data bit has been added, the register is shifted once more as specified above.

The register then contains the EDC bytes.

If further shifting is to take place during the writing of the EDC bytes, the control signal inhibits exclusive OR operations.

To check for errors when reading, the data bits are added into the shift register in exactly the same manner as they were during writing. After the data the EDC bytes are also entered into the shift register as if they were data. After the final shift, the register contents will be all ZERO if the record does not contain errors.

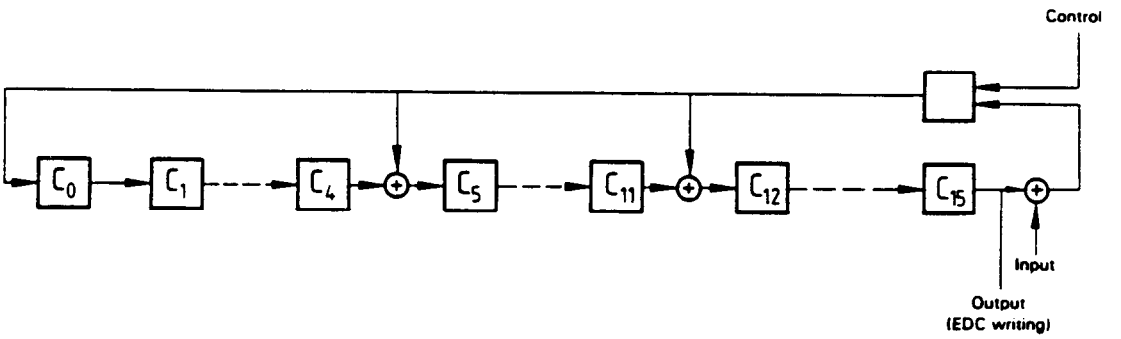

Figure F.1 - Shift register

Copyright International Organization for Standardization
Provided by IHS under license with ISO
No reproduction or networking permitted without license from IHS
Not for Resale

Annex G
(normative)

Cartridge distortion test gauge

G.1 The gauge to be used is shown in figure G.1.

G.2 The gauge shall be made of a suitable material, e.g. of carbon steel and be chrome-plated. The inner surfaces shall be polished to a surface finish of 5 µm peak-to-peak.

G.3 Dimensions shall be as follows:

A = 96,0 mm min.
B = 91,0 mm ± 0,1 mm
C = 8,50 mm ± 0,01 mm
D = 3,80 mm ± 0,01 mm
E = 4,20 mm ± 0,01 mm

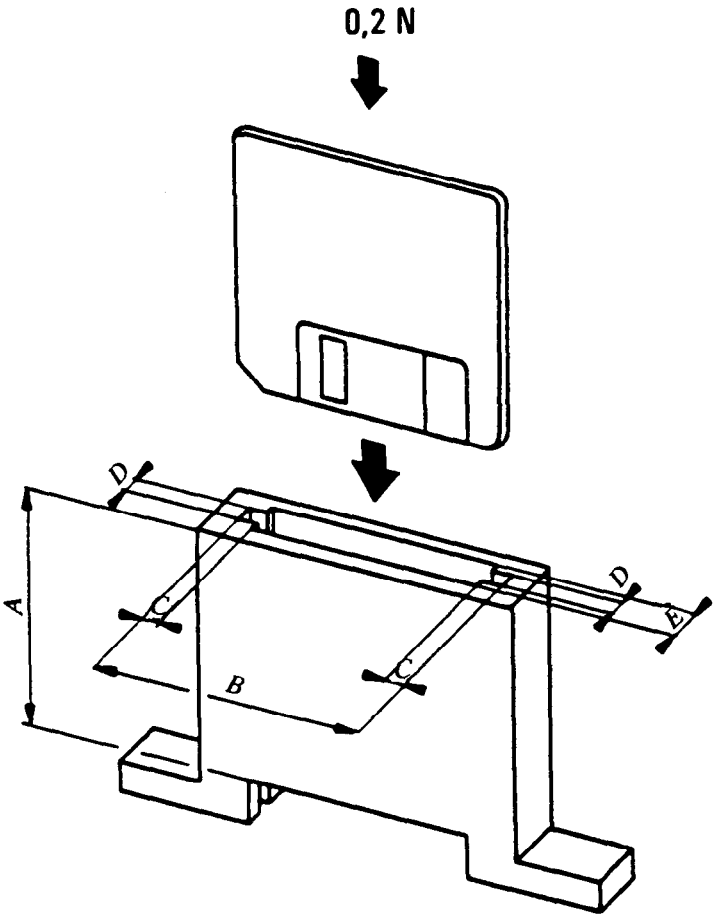

Figure G.1 - Test gauge

Copyright International Organization for Standardization
Provided by IHS under license with ISO
No reproduction or networking permitted without license from IHS
Not for Resale

Annex H
(normative)

Method for measuring peak shift

H.1 Introduction

The resolution of a flexible disk system at the inner tracks, where the recording density is highest, must be sufficiently high to minimize the peak shift. However, it must not be too high at outer tracks, where the recording density is lowest, otherwise spurious read pulses may be generated.

This test controls the characteristics of the disk by measuring the peak shift at inner tracks and setting limits for the upper and lower values.

H.2 Description of the measuring equipment

H.2.1 Peak shift test drive

The test drive shall be any drive suitable for use at 31 831 ftprad.

H.2.2 Peak shift measurement circuit

The measurement circuit shall be as shown in figure H.1.

The operation of the circuit is illustrated in the timing diagram figure H.2 as follows:

a) Index pulse

b) Index pulse timer

A 1 ms timer triggered by the Index pulse. Its output masks the discontinuities that occur in the recording when the write current is switched off.

c) Read signal

The read signal resulting from the test pattern. The positive-going edge of the first bit of a pair triggers the LS 74 flip-flop. The negative-going edge of the first bit of a pair triggers the LS 221 timer.

d) Bit period window

This is the output waveform of the LS 221 timer. It allows the positive-going edge of the second bit of a pair to reset flip-flop LS 74.

e) is the output of the LS 74; its duration is the time interval T' between the two bits of a pair.

f) Sampling period

This period commences when the second LS 74 flip-flop is set by the trailing edge of d) after the Index pulse timer has reset.

It is terminated by the trailing edge of the first output pulse of the LS 221 timer to occur during the period of the next Index pulse timer.

Copyright International Organization for Standardization
Provided by IHS under license with ISO
No reproduction or networking permitted without license from IHS
Not for Resale

g) Output

Waveform (e) is passed to the time interval counter during the sampling period.

H.2.3 Period of the LS 221 timer

The period of this timer shall be 1,5 μs.

H.2.4 Time interval counter

The counter shall have a resolution of 5 ns or better.

H.3 Test method

H.3.1 AC bulk-erase the disk cartridge.

H.3.2 Using the Test Recording Current, write the test pattern DB6 (110110110110...) continuously on Track 79, on each side, commencing with the Index pulse and switching off the write current when the Index pulse is detected at the end of one revolution.

H.3.3 Read back on the same test drive and measure intervals T' on the time Interval Counter.

NOTE - To minimize errors due to changes in the rotational speed of the drive, it is essential that reading shall occur immediately after writing.

H.3.4 Sampling method

H.3.4.1 The data recording area extends from immediately after the leading edge of the Index pulse to immediately after the leading edge of the next Index pulse.

NOTE - Due to uncertainties of recording near the leading edge of the Index pulse, care must be taken not to sample the read signal in the region of uncertainty.

H.3.4.2 The sampling area extends from the resetting of the Index pulse timer to the leading edge of the next Index pulse (resulting from H.2.2 b).

H.3.4.3 The preferred sampling method is to measure every T' interval in the sampling area, if permitted by the sampling rate of the time interval counter. If the sampling rate of the counter prohibits the measurement of every T', then a lesser number of T' measurements shall be permitted, providing that the sampling is random.

H.3.4.4 The minimum number of random samples shall be 1 000.

H.3.5 Asymmetry of the write waveform

To eliminate errors due to asymmetry of the write current waveform, repeat operations H.3.1 to H.3.4 using the test pattern B6D (101101101101...).

H.3.6 The operations specified in H.3.1 to H.3.5 shall be repeated for an RM 10994.

H.4 Definitions

$$\text{Peak Shift} = \frac{\overline{T'} - T}{2}$$

where

$\overline{T'}$ is the mean period between pairs of bits in the read waveform,

T equals 1 μs, i.e. the period of the $2f$ pattern.

Copyright International Organization for Standardization
Provided by IHS under license with ISO
No reproduction or networking permitted without license from IHS
Not for Resale

The peak shift value of the disk under test expressed as a percentage of that for the Master Standard Reference FDC shall be

$$\frac{P_t}{P_s} \times K_O \%$$

where

P_t is the peak shift value obtained for the disk under test;

P_s is the peak shift value obtained for the RM 10994;

K_O is the calibration factor in percent for the RM 10994 relative to the Master Standard Reference FDC.

Copyright International Organization for Standardization
Provided by IHS under license with ISO
No reproduction or networking permitted without license from IHS
Not for Resale

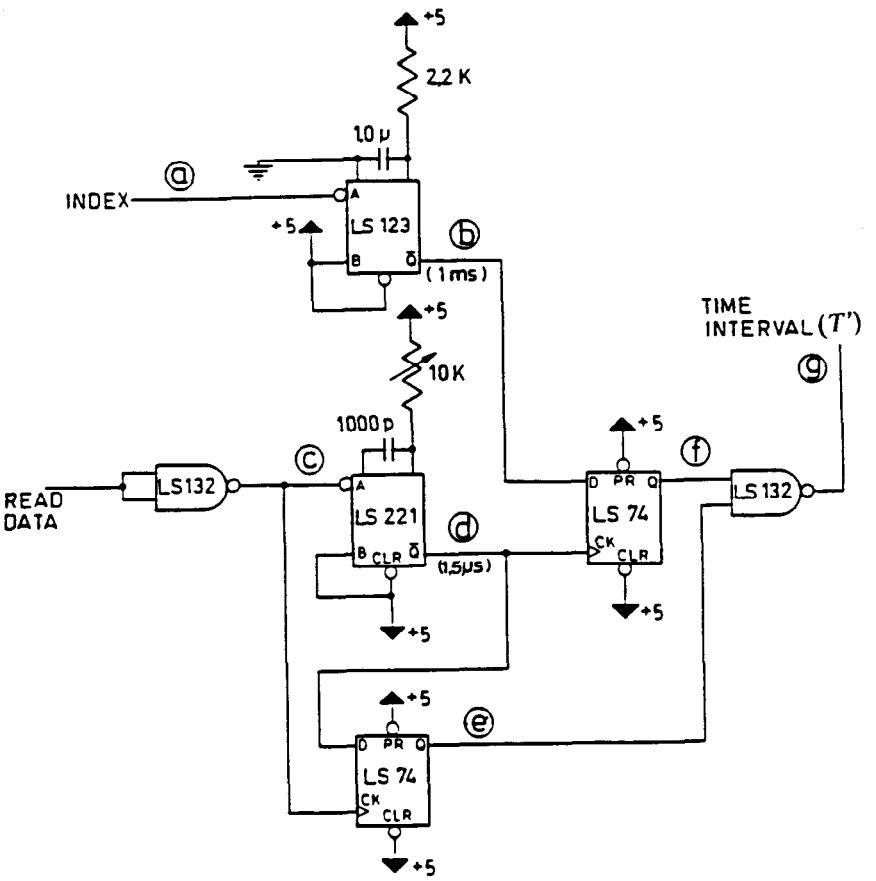

Figure H.1 - Measurement circuit

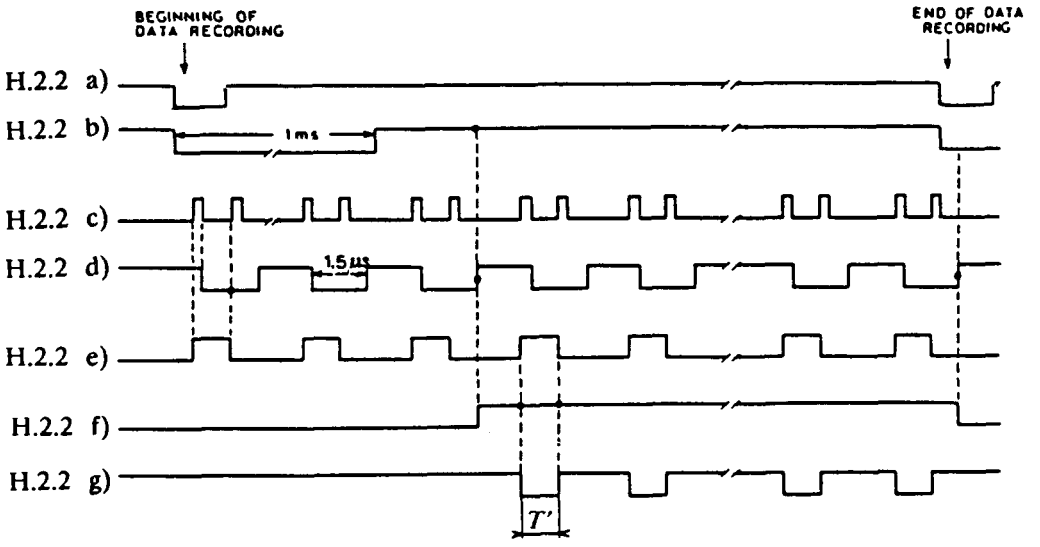

Figure H.2 - Timing diagram

Copyright International Organization for Standardization
Provided by IHS under license with ISO
No reproduction or networking permitted without license from IHS
Not for Resale

Annex J
(normative)

Head and read amplifier for functional testing

J.1 General

This annex specifies the head and the read amplifier for functional testing of 90 mm flexible disk cartridges using MFM recording at 31 831 flux transitions per radian on both sides, and for measurement of flux transition spacing.

J.2 Test equipment

J.2.1 Head

J.2.1.1 Read/write head

The read/write head of a combined head consisting of an erase head and a read/write head shall have an absolute resolution of 75 % to 85 % at Track 79 on each side, using the Secondary Standard Flexible Disk Cartridge, Reference Material RM 10994, applying the calibration factor of the Reference Material appropriate to the side, and recording with the appropriate Test Recording Current.

The resonant frequency of the read/write head shall be greater than 1 000 000 Hz.

The resolution shall not be adjusted by varying the load impedance of the read/write head.

The resolution shall be measured at the output of the amplifier defined in J.2.2.

J.2.1.2 Erase head

The erase head of a combined head consisting of an erase head and a read/write head shall have an absolute eraseability of less than 2 % at Track 00 using 1*f* on each side, using Reference Material RM 10994, and using the Test Recording Current and the Test Erase Current.

NOTE - The eraseability of RM 10994 to less than 2 %, using the Test Recording Current and the Test Erase Current, is a property of the RM certified by PTB.

J.2.1.3 Offset angle

The offset angle of the read/write head shall be

$$\theta = \arcsin \frac{0{,}35}{R_n} \pm 0^\circ\ 9'$$

J.2.1.4 Contact

Care shall be taken that the heads are in good contact with the disk during tests.

J.2.2 Read amplifier

The read amplifier shall have a flat response from 10 000 Hz to 750 000 Hz within a 2 dB wide band, and amplitude saturation shall not occur.

The -3 dB roll off point shall be less than 1 500 000 Hz (approximately 6*f*).

Copyright International Organization for Standardization
Provided by IHS under license with ISO
No reproduction or networking permitted without license from IHS
Not for Resale

The attenuation above the -3 dB roll off point frequency shall not be less than that given by a line drawn through 0 dB at the -3 dB roll off point frequency with a slope of -12 dB/octave.

The phase shift shall be linear within a 10° wide band between 10 000 Hz and 750 000 Hz.

Copyright International Organization for Standardization
Provided by IHS under license with ISO
No reproduction or networking permitted without license from IHS
Not for Resale

Annex K

(normative)

Procedure for determining test recording current and test erase current

K.1 Introduction

This annex specifies the procedure for determining the Test Recording Current and the Test Erase Current in a drive for the functional testing specified in 9.3, using a Secondary Reference Flexible Disk Cartridge.

The Test Recording Current I_{tr} obtained by measuring the Average Signal Amplitude as a function of the recording current, may be influenced by the erase current used in this measurement. On the other hand, the Test Erase Current I_{te} obtained by measuring eraseability as a function of the erase current, may be influenced by the recording current. If I_{tr} and I_{te} are determined independently, in general a deviation from the true values occurs.

In order to avoid the above problem, the method described below shall be used. It allows to determine I_{tr} and I_{te} consistently.

K.2 Procedure

In the following description I_{rf} is the recording current which causes the Reference Field, and I_{re} is the erase current which causes the Reference Erase Field. The notation (n) indicates the n-th approximation.

1) Set $I_{te}(0)$ to an appropriate erase current, e.g. the erase current of the drive as it is. Measure the Average Signal Amplitude as a function of the recording current, and determine $I_{rf}(1)$. $I_{tr}(1)$ is given by 2 x $I_{rf}(1)$ (see K.3).

2) Set a recording current of the drive to $I_{tr}(1)$. Measure eraseability as a function of the erase current. The erase current when 1*f* is recorded in this measurement shall be set to $I_{te}(0)$. Determine $I_{ref}(1)$, then $I_{te}(1)$ is given by 1,5 x $I_{ref}(1)$ (see K.4).

3) Determine $I_{rf}(2)$ by using $I_{te}(1)$, then determine $I_{tr}(2)$ by the same method as in 1).

4) Determine $I_{ref}(2)$ by using $I_{tr}(1)$ and $I_{te}(1)$, then determine $I_{te}(2)$ by the same method as in 2).

5) Continue the above procedure until the following conditions are satisfied:

$$I_{te}(n) = I_{te}(n\text{-}1)$$
$$I_{tr}(n) = I_{tr}(n\text{-}1)$$

NOTE - Usually, the above conditions are satisfied before n equals 3.

The values of I_{tr} and I_{te} satisfying the two equations in 5) above will be the values of the Test Recording Current and of the Test Erase Current to be used for functional testing.

K.3 Calibration factor for determining the reference field (figure K.1)

The Typical Field of RM 10994 is related to the Reference Field, that is the Typical Field of the Master Standard Reference Flexible Cartridge, by means of a calibration factor K_r :

$$K_r = \frac{\text{Typical Field for the Reference Material}}{\text{Reference Field}} \times 100\ \%$$

Copyright International Organization for Standardization
Provided by IHS under license with ISO
No reproduction or networking permitted without license from IHS
Not for Resale

This calibration factor K_r shall be used for determining I_{rf}, the recording current which causes the Reference Field:

$$I_{rf} = \frac{\text{Current which causes the Typical Field of RM 10994}}{0{,}01\ K_r}$$

K.4 Calibration factor for determining the Reference Erase Field (figure K.2)

K_e is the calibration factor for determining the Reference Erase Field, it is given in the certificate attached to each RM 10994.

$$K_e = \frac{\text{Eraseability of the Reference Material at } I_{ref}}{\text{Eraseability of the Master Standard Reference Disk Cartridge at } I_{ref}} \times 100\ \%$$

I_{ref} is defined as the erase current which causes an eraseability of 5 % for the Master Standard Reference Flexible Disk Cartridge.

I_{ref} can be obtained as the current which causes an eraseability for RM 10994 of

$$5 \times \frac{K_e}{100}$$

Copyright International Organization for Standardization
Provided by IHS under license with ISO
No reproduction or networking permitted without license from IHS
Not for Resale

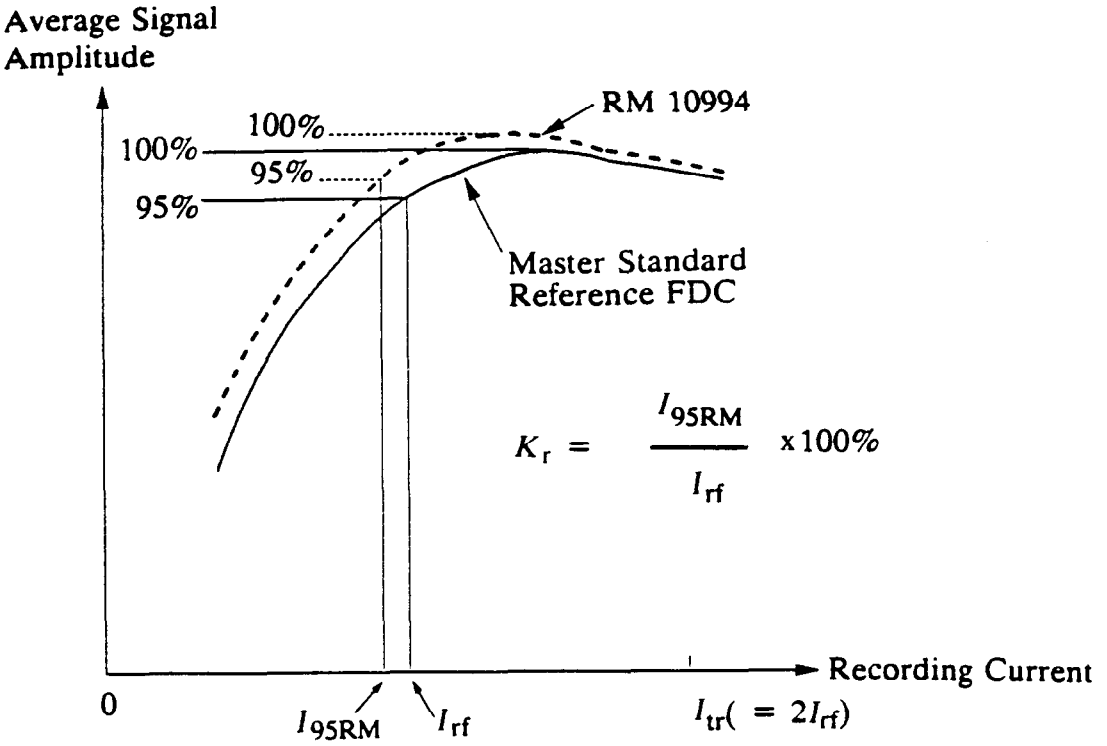

I_{95RM} is the current which causes the Typical Field of RM 10994

Figure K.1 - Reference Field and Test Recording Current

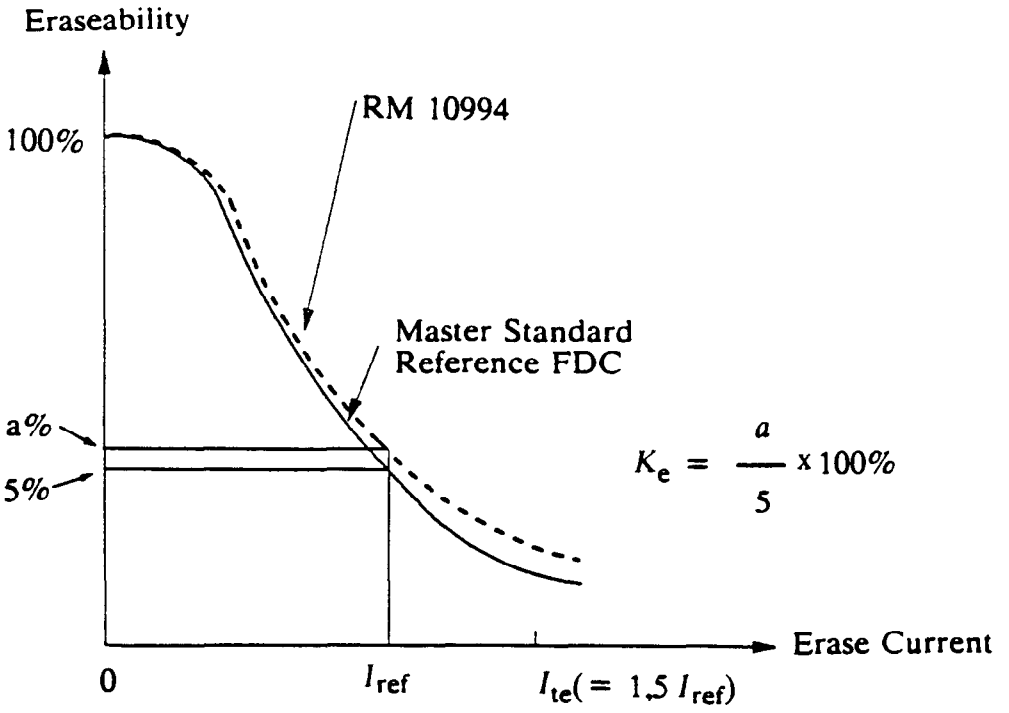

a is the eraseability at I_{ref} for the RM 10994

Figure K.2 - Reference Erase Field and Test Erase Current

Copyright International Organization for Standardization
Provided by IHS under license with ISO
No reproduction or networking permitted without license from IHS
Not for Resale

UDC 681.327.634

Descriptors: data processing, information interchange, data recording, data recording devices, magnetic recording, magnetic disks, flexible disk cartridges, specifications, dimensions, physical properties, magnetic properties, track formats, interchangeability.

Price based on 45 pages

--`,,```,,,,````-`-`,,`,,`,`,,`---
Copyright International Organization for Standardization
Provided by IHS under license with ISO
No reproduction or networking permitted without license from IHS
Not for Resale