INTERNATIONAL STANDARD

ISO/IEC 10885

First edition
1993-11-01

Information technology — 356 mm optical disk cartridge for information interchange — Write once

Technologies de l'information — Cartouches de disques optiques de 356 mm *pour l'échange d'informations — Cartouches non réinscriptibles*

Reference number
ISO/IEC 10885:1993(E)

Copyright International Organization for Standardization
Provided by IHS under license with ISO
No reproduction or networking permitted without license from IHS

Not for Resale

Contents

			Page
1	Scope		1
2	Conformance		1
3	Normative reference		1
4	Definitions		1
	4.1 General		2
	4.1.1	caddy	2
	4.1.2	case	2
	4.1.3	optical disk	2
	4.1.4	optical disk carrier	2
	4.1.5	optical disk cartridge	2
	4.1.6	perimeter ring	2
	4.2 Disk		2
	4.2.1	air-sandwich disk	2
	4.2.2	clamping zone	2
	4.2.3	coversheet	2
	4.2.4	disk reference plane	2
	4.2.5	entrance surface	2
	4.2.6	hub	2
	4.2.7	protective layer	2
	4.2.8	recording layer	2
	4.2.9	spindle	2
	4.2.10	tilt	2
	4.3 Optics		2
	4.3.1	actual write power	2
	4.3.2	baseline reflectance	2
	4.3.3	birefringence	2
	4.3.4	cross-talk level	3
	4.3.5	mark	3
	4.3.6	narrow band signal-to-noise ratio	3
	4.3.7	noise floor	3
	4.3.8	optical retardation	3
	4.3.9	read power	3
	4.3.10	write power	3

© ISO/IEC 1993
All rights reserved. No part of this publication may be reproduced or utilized in any form or by any means, electronic or mechanical, including photocopying and microfilm, without permission in writing from the publisher.

ISO/IEC Copyright Office • Case postale 56 • CH-1211 Genève 20 • Switzerland

Printed in Switzerland

Copyright International Organization for Standardization
Provided by IHS under license with ISO
No reproduction or networking permitted without license from IHS

Not for Resale

4.4	Format		3
	4.4.1	band	3
	4.4.2	format	3
	4.4.3	track	3
	4.4.4	track pitch	3
4.5	Errors		3
	4.5.1	cyclic redundancy check (CRC)	3
	4.5.2	defect management	3
	4.5.3	error correction code (ECC)	3
	4.5.4	error detection and correction (EDAC)	3
	4.5.5	interleaving	3
	4.5.6	Reed-Solomon code	3
5	Abbreviations and acronyms		3
6	Conventions		4
7	General description		4
8	Environment		4
8.1	Testing environment		4
8.2	Operating environment		4
8.3	Storage environment		5
	8.3.1	Short-term storage	5
	8.3.2	Long-term storage	5
	8.3.3	Transportation	5
9	Safety requirements		5
9.1	Safety		5
9.2	Flammability		5
10	Dimensional and mechanical characteristics of the caddy		6
10.1	General		6
10.2	Caddy drawings		6
10.3	Relationship of sides and interface with carrier		6
	10.3.1	Relationship of sides	6
	10.3.2	Interface with carrier	6
	10.3.3	Write protect features (see figure 4)	6
10.4	Materials		7
10.5	Mass		7
10.6	Caddy dimensions		7
	10.6.1	Overall dimensions of the caddy	7
	10.6.2	Opening force of the caddy door	7
	10.6.3	Location of the caddy window	7
	10.6.4	Caddy write protect tabs	7

Copyright International Organization for Standardization
Provided by IHS under license with ISO
No reproduction or networking permitted without license from IHS
Not for Resale

10.6.5 Caddy autoload drive surfaces 7

11 Dimensional and mechanical characteristics of the carrier 17

11.1 General 17
11.2 Carrier drawings 17
11.3 Sides, reference axes and reference planes 18
11.3.1 Relationship between Side A and Side B 18
11.3.2 Reference axes and reference features 18
11.4 Materials 18
11.5 Mass 18
11.6 Location of the optical disk centre in the carrier 18
11.7 Overall dimensions of the carrier 18
11.8 Cutouts 19
11.9 Carrier latch points and latch actuation force 19
11.10 Carrier guide rails and carrier thickness 19
11.11 Carrier write protect hole 20
11.12 Carrier Side A or Side B sensor hole 20
11.13 Carrier disk type sensor notches 20
11.14 Carrier location within the caddy 21
11.15 Carrier locator pin slot characteristics and location within the caddy 21
11.16 Carrier latch point location when the carrier is inside the caddy 21
11.17 Carrier latch release hole locations 22
11.18 Carrier latch release hole locations for unlatched carrier 22
11.19 Location of carrier locator pin slots 22
11.20 Carrier label location 22
11.21 Carrier label 23
11.22 Carrier label characteristics 23

12 Dimensional and physical characteristics of the disk 37

12.1 General 37
12.1.1 Protective layer 37
12.1.2 Unobstructed access 37
12.2 Disk drawings 38
12.3 Sides, reference axes, reference plane 38
12.3.1 Relationship of Sides A and B 38
12.3.2 Reference axes and reference planes 38
12.4 Dimensions of the disk 38
12.4.1 Outside diameter 38
12.4.2 Outside diameter of the recording zone 38
12.4.3 Inside diameter of the recording zone 38
12.4.4 Outside diameter of the clamping zone 38
12.4.5 Inside diameter of the clamping zone 39
12.4.6 Inner diameter of the optical disk 39
12.4.7 Optical disk inner diameter roundness 39

Copyright International Organization for Standardization
Provided by IHS under license with ISO
No reproduction or networking permitted without license from IHS Not for Resale

12.4.8 Location of the recording surface 39
12.4.9 Thickness of the clamping zone) 39
12.4.10 Inner diameter of the chamfer 39
12.4.11 Inner diameter chamfer angle 39
12.4.12 Outer diameter of the chamfer 40
12.4.13 Chamfer angle of the outer diameter 40
12.4.14 Dimensional characteristics of the protective layers 40

12.5 Mass 40
12.6 Moment of inertia 40
12.7 Imbalance 41
12.8 Apparent axial runout 41
12.9 Residual focus error 41

13 Handling requirements 41

13.1 Drop test 41
13.2 Dead weight strength 41
13.3 Exposure to ambient light 41

14 Interface between disk and drive 41

14.1 Clamping technique 41
14.2 Radial positioning 41
14.3 Reference surface 41
14.4 Clamping force 42

15 Characteristics of the protective layer 49

15.1 General 49
15.2 Characteristics of a 90 μm thick protective layer 49

15.2.1 Index of refraction 49
15.2.2 Thickness 49
15.2.3 Optical characteristics 49
15.2.4 Tilt 49

15.3 Characteristics of a 1,2 mm thick protective layer 49

15.3.1 Index of refraction 49
15.3.2 Thickness 49
15.3.3 Optical characteristics 49
15.3.4 Tilt 49

16 Characteristics of the recording layer 49

16.1 Test conditions 50

16.1.1 General 50
16.1.2 Read conditions 50
16.1.3 Write conditions 50

16.2 Baseline reflectance 51

16.2.1 General 51

Copyright International Organization for Standardization
Provided by IHS under license with ISO
No reproduction or networking permitted without license from IHS
Not for Resale

16.2.2 Actual value 51
16.2.3 Requirement 51

16.3 Write power requirement 51
16.4 Read power requirement 51
16.5 Prerecorded marks 51
16.6 Data written in user area 51

16.6.1 Reflectivity characteristics of written marks 51
16.6.2 Signals 51
16.6.3 Narrow-band signal-to-noise ratio 52
16.6.4 Cross-talk 52

17 Characteristics of the data organization on the disk 52

17.1 General description 52
17.2 Band organization 53

17.2.1 Recordable area in each band 53
17.2.2 Track shape in each band 53
17.2.3 Direction of rotation for each side 53
17.2.4 Track pitch 53
17.2.5 Radial eccentricity of pre-formatted information 53
17.2.6 Band numbers 54
17.2.7 Pre-formatted information in-track bit spacing 54
17.2.8 Rotational velocity 54
17.2.9 Number of sectors in each band 54

17.3 Formatted zones 55

17.3.1 Organization of the sectors in each band 55
17.3.2 Organization of the usable sectors 56
17.3.3 User sector organization 58

17.4 Requirements for interchange 59

17.4.1 Requirements for reading 59
17.4.2 Requirements for writing 59

18 Format 59

18.1 Track layout 59

18.1.1 Tracking 59
18.1.2 Tracking pads 59
18.1.3 Tracking pad tolerances 60
18.1.4 Tracking push-pull ratio 60
18.1.5 Focus 60
18.1.6 Recorded characteristics 60

18.2 Leader and manufacturing test sectors 60
18.3 Disk Identification Sector 60
18.4 Sectors of the bad sector map 61
18.5 Disk drive supplemental data 61
18.6 User supplemental data 61

Copyright International Organization for Standardization
Provided by IHS under license with ISO
No reproduction or networking permitted without license from IHS
Not for Resale

18.7	Write power calibration and auto-rewrite sectors		**61**
18.8	User sector format		**61**
	18.8.1	User sector header	**61**
	18.8.2	User data field preamble and pre-formatted tracking pad	**62**
	18.8.3	Pre-formatted tracking pads	**62**
	18.8.4	User data field	**62**
	18.8.5	Error detection and correction (EDAC)	**63**
	18.8.6	Interface sector gap	**63**
18.9	Sectors following the user sectors in each band		**64**
18.10	Coding method		**64**

Annexes

A - Definition of air cleanliness of class 100 000 **79**

B - Recommendation for transportation **80**

C - Mechanical test method **81**

D - Imbalance test method **83**

E - Apparent axial runout test method **84**

F - Residual focus error test method **86**

G - Drop test method **89**

H - Dead weight strength test method **90**

J - Double-pass retardation test method **91**

K - Signal characteristics test method **94**

L - Optical disk write power test method **96**

M - Read power test method **98**

N - Narrow-band signal-to-noise ratio test method **99**

P - Cross-talk test method **100**

Q - Radial runout test method **101**

R - Residual tracking error signal test method **103**

Copyright International Organization for Standardization
Provided by IHS under license with ISO
No reproduction or networking permitted without license from IHS
Not for Resale

Foreword

ISO (the International Organization for Standardization) and IEC (the International Electrotechnical Commission) form the specialized system for worldwide standardization. National bodies that are members of ISO or IEC participate in the development of International Standards through technical committees established by the respective organization to deal with particular fields of technical activity. ISO and IEC technical committees collaborate in fields of mutual interest. Other international organizations, governmental and non-governmental, in liaison with ISO and IEC, also take part in the work.

In the field of information technology, ISO and IEC have established a joint technical committee, ISO/IEC JTC 1. Draft International Standards adopted by the joint technical committee are circulated to national bodies for voting. Publication as an International Standard requires approval by at least 75 % of the national bodies casting a vote.

International Standard ISO/IEC 10885 was prepared by Joint Technical Committee ISO/IEC JTC 1, *Information technology,* Sub-Committee SC 23, *Optical disk cartridges for information interchange.*

Annexes A, C, D, E, F, G, H, J, K, L, M, N, P, Q and R form an integral part of this International Standard. Annex B is for information only.

Copyright International Organization for Standardization
Provided by IHS under license with ISO
No reproduction or networking permitted without license from IHS
Not for Resale

Information technology — 356 mm optical disk cartridge for information interchange — Write once

1 Scope

This International Standard specifies the characteristics of 356 mm optical disk cartridges of the type providing for information to be written once and read many times.

ISO 10885 specifies

- definitions of essential concepts,
- the environment in which the characteristics shall be tested,
- the environments in which the cartridge shall be operated and stored,
- the mechanical, physical and dimensional characteristics of the case and of the optical disk,
- the optical characteristics and the recording characteristics for recording the information once and for reading it many times, so as to provide physical interchangeability between data processing systems.
- the format for the physical disposition of the tracks and sectors, the error correction codes, the modulation methods used for recording and the quality of the recorded signals.

Together with a standard for volume and file structure, ISO/IEC 10885 provides for full data interchange between data processing systems.

2 Conformance

A 356 mm optical disk cartridge is in conformance with this International Standard if it meets all the mandatory requirements herein.

3 Normative reference

The following standard contains provisions which, through reference in this text, constitute provisions of this International Standard. At the time of publication, the edition indicated was valid. All standards are subject to revision, and parties to agreements based on this International Standard are encouraged to investigate the possibility of applying the most recent edition of the standard listed below. Members of IEC and ISO maintain registers of currently valid international standards.

ISO/IEC 646:1991 *Information Technology - ISO 7-bit coded character set for information interchange.*

4 Definitions

For the purposes of this International Standard, the following definitions apply.

Copyright International Organization for Standardization
Provided by IHS under license with ISO
No reproduction or networking permitted without license from IHS
Not for Resale

4.1 General

4.1.1 caddy: An enclosure which protects the optical disk and carrier from contamination and damage due to physical handling. The caddy may include space for physical labelling, write-inhibit features and provisions for automatic handling.

4.1.2 case: The housing for an optical disk, that protects the disk and facilitates disk interchange.

4.1.3 optical disk: A disk containing information in the form of marks in a recording layer that can be read with an optical beam.

4.1.4 optical disk carrier: A framework which captures and holds an optical disk except when the optical disk is mounted on the disk drive spindle. The carrier provides the interface with the equipment for handling of an optical disk. The carrier and the optical disk are permanently mated and as a sub-assembly interchangeable with any caddy, disk drive or library equipment.

4.1.5 optical disk cartridge: A device consisting of a case containing an optical disk.

4.1.6 perimeter ring: An outside diameter feature of the optical disk to provide an interface to the carrier and to handling devices of an optical disk drive.

4.2 Disk

4.2.1 air-sandwich disk: A disk which consists at least of a substrate with a recording layer and a cover separated by two annular spaces providing an enclosed air gap for the recording layer.

4.2.2 clamping zone: The annular part of the disk within which the clamping force is applied by the clamping device.

4.2.3 coversheet: A transparent covering placed at a pre-determined distance from the recording surface to protect the optical disk from surface contamination and to cause surface contaminants to be out of focus.

4.2.4 disk reference plane: A plane defined by the perfectly flat annular surface of an ideal spindle which contacts the clamping zone of the disk and which is normal to the axis of rotation.

4.2.5 entrance surface: The disk surface onto which the optical beam first impinges.

4.2.6 hub: The central feature on the disk which interacts with the spindle of the disk drive to provide radial centring and clamping force and, in some cases, axial location.

4.2.7 protective layer: A transparent layer on the disk provided for mechanical protection of the recording layer, through which the optical beam accesses the recording layer. A suitable substrate can simultaneously function as the protective layer.

4.2.8 recording layer: A layer of the disk on or in which data is written during manufacture and/or use.

4.2.9 spindle: The part of the disk drive which contacts the disk and/or the hub.

4.2.10 tilt: The angle which the normal to the entrance surface makes with the normal to the disk reference plane.

4.3 Optics

4.3.1 actual write power: The actual write power is two times the recording beam power exiting the objective lens for a time averaged measurement of 50 percent duty cycle optical pulses where the pulse length is measured at one half the peak power.

4.3.2 baseline reflectance: The reflectance of an unwritten, non-grooved area of a disk through the protective layer.

4.3.3 birefringence: The property of a material which causes incident light waves of different polarizations to be refracted differently by the material.

Copyright International Organization for Standardization
Provided by IHS under license with ISO
No reproduction or networking permitted without license from IHS
Not for Resale

4.3.4 cross-talk level: The ratio of the level of a spurious signal generated by an adjacent track to the level of the signal of that track.

4.3.5 mark: A feature on the disk which may take the form of a physical change (for example a hole, a pit or a bubble), a magnetic change (Kerr effect) or other change (for example phase change) that can be sensed by the optical system.

4.3.6 narrow band signal-to-noise ratio: The ratio of the root mean square (RMS) voltage of a signal at a specified frequency to the RMS voltage of the noise in a specified bandwidth, expressed in decibels.

4.3.7 noise floor: The noise spectrum in a specified bandwidth.

4.3.8 optical retardation: The change, after passage through a birefringent material, of the phase between two orthogonally, linearly polarized plane waves associated with a given propagation direction.

4.3.9 read power: The incident power specified at the entrance surface that can be used to read the data on the disk without damaging the recording layer.

4.3.10 write power: The incident power specified at the entrance surface used to produce marks.

4.4 Format

4.4.1 band: An annular area of the optical disk recording zone.

4.4.2 format: The arrangement or layout of the data on a data medium.

4.4.3 track: A 360-degree segment of the path which is to be followed by the read beam during reading or the write beam during writing.

4.4.4 track pitch: The distance between adjacent track centrelines measured in a radial direction.

4.5 Errors

4.5.1 cyclic redundancy check (CRC): A method to detect errors in data.

4.5.2 defect management: In real time, refers to automated programs for altering read or write power, focus or tracking when difficulties are detected, and for the decision to abandon sectors of high error content. In batch mode, refers to guidelines for disk rewrite or retirement.

NOTE: Disk retirement is retention of a disk which can be read but not written.

4.5.3 error correction code (ECC): An error-detecting code designed to correct certain kinds of errors in data.

4.5.4 error detection and correction (EDAC): A family of methods in which redundancy is added to data in known fashion and is written with the data. Upon readback, a decoder removes the redundancy and uses the redundant information to detect and correct erroneous channel symbols.

4.5.5 interleaving: The process of allocating the physical sequence of units of data to render the data more immune to burst errors.

4.5.6 Reed-Solomon code: An error detection and/or correction code which is particularly suited to the correction of errors which occur in bursts or are strongly correlated.

5 Abbreviations and acronyms

AM	Address mark
BSM	Bad sector map
CRC	Cyclic redundancy check
EDAC	Error detection and correction
ECC	Error correction code
ID	Inside diameter
IDENT	Identification

Copyright International Organization for Standardization
Provided by IHS under license with ISO
No reproduction or networking permitted without license from IHS
Not for Resale

OD	Outside diameter
PAD	Tracking pad
RLL	Run length limited (code)
RPM	Revolutions per minute
R-S/LDC	Reed-Solomon long distance code
VFO	Variable frequency oscillator

6 Conventions

a) In the sector headers, character data are recorded according to the IRV of ISO/IEC 646.

b) All other data are stored as binary integers.

c) Multiple-byte binary data are stored least significant byte first.

d) Numbers in hexadecimal notation are shown in parentheses.

7 General description

The 356 mm optical disk cartridge specified by this International Standard is two sided and of the type in which the information is written once and read many times. Such a 356 mm optical disk cartridge comprises three parts: an optical disk, a carrier, and a caddy. The carrier is for capture and equipment handling of the optical disk. The optical disk and carrier sub-assembly are contained in the caddy to provide protection from contaminants and to provide protection during human handling. (see figure 1).

A coherent light beam is used to write data to, or to read data from, the disk. This International Standard accommodates optical disks having either a 90 μm thick protective layer or a 1,2 mm thick protective layer.

8 Environment

8.1 Testing environment

Unless otherwise specified, tests and measurements made on the ODC to check the requirements of this International Standard shall be carried out in an environment where the air immediately surrounding the ODC is within the following conditions.

Temperature	23 °C ± 2 °C
Relative humidity	45 % to 55 %
Atmospheric pressure	75 kPa to 110 kPa
Air cleanliness	Class 100 000 (see annex A)
Conditioning before testing	48 h minimum

Before testing, the ODC shall be conditioned in this environment for 48 h minimum. No condensation on or in the ODC shall occur.

8.2 Operating environment

Optical disk cartridges used for data interchange shall be operated in an environment where the air immediately surrounding the optical disk and carrier is within the following conditions when the drive has reached its stable operating conditions.

Temperature	10 °C to 50 °C
Relative humidity	10 % to 80 %
Wet bulb temperature	29 °C maximum
Atmospheric pressure	75 kPa to 110 kPa
Temperature gradient	10 °C/h maximum

Copyright International Organization for Standardization
Provided by IHS under license with ISO
No reproduction or networking permitted without license from IHS
Not for Resale

Temperature gradient	10 °C/h maximum
Relative humidity gradient	10 %/h maximum
Air cleanliness	Class 100 000 (see annex A)

No condensation on or in the ODC shall be allowed to occur.

If an ODC has been exposed during storage and/or transportation to conditions outside those specified above, it shall be acclimatized in the operating environment for at least 2 h before use. In the operating environment an ODC shall be capable of withstanding a thermal shock of up to 20 °C when inserted into, or removed from, the drive.

8.3 Storage environment

Storage environment is the ambient condition to which the ODC without any additional protective enclosure is exposed when stored.

8.3.1 Short-term storage

For a time of six consecutive weeks the optical disk cartridge within its specified shipping package shall not be exposed to the environmental conditions outside those given below.

Temperature	-20 °C to +55 °C
Relative humidity	5 % to 90 %
Wet bulb temperature	29 °C maximum
Atmospheric pressure	75 kPa to 110 kPa
Temperature gradient	20 °C/h maximum
Relative humidity gradient	20 %/h maximum

No condensation on or in the optical disk assembly shall be allowed to occur.

8.3.2 Long-term storage

For a storage period longer than six consecutive weeks the optical disk cartridge shall not be exposed to environmental conditions outside those given below.

Temperature	-10 °C to 50°C
Relative humidity	10 % to 90 %
Wet bulb temperature	29 °C maximum
Atmospheric pressure	75 kPa to 110 kPa
Temperature gradient	15 °C/h maximum
Relative humidity gradient	10 %/h maximum
Air Cleanliness	Class 100 000 (see annex A)

No condensation on or in the optical disk cartridge shall be allowed to occur.

8.3.3 Transportation

This International Standard does not specify requirements for transportation; guidance is given in annex B.

9 Safety requirements

9.1 Safety

The cartridge and its components shall not constitute any safety or health hazard when used in its intended manner or in any foreseeable use in an information processing system.

9.2 Flammability

The cartridge and its components shall be made from materials which, if ignited from a match flame, do not continue to burn in a still, carbon dioxide atmosphere.

Copyright International Organization for Standardization
Provided by IHS under license with ISO
No reproduction or networking permitted without license from IHS
Not for Resale

10 Dimensional and mechanical characteristics of the caddy

10.1 General (see figure 1)

The caddy contains the 356 mm optical disk which is captured within the carrier. The caddy provides the optical disk and carrier sub-assembly protection from contaminants and during human handling.

The caddy shall enclose the carrier and optical disk at all times when they are external to a disk drive or an automated library storage equipment.

Any caddy shall be interchangeable with any carrier.

The caddy shall be a rigid, protective enclosure of rectangular shape and include a means for positioning and retaining the carrier and optical disk.

The caddy shall have write protect tabs that interface with the carrier and the tabs shall also be accessible for manual enable or inhibit (see figure 2).

The caddy shall have an access door for automated unload and load of the carrier and optical disk (see figure 3).

The caddy shall have a window for viewing the label on the end of the carrier and the caddy shall have areas provided for manufacturer labels (see figure 2).

The caddy shall provide drive/backup roller surfaces for disk drive cartridge load and unload operations (see figure 8).

10.2 Caddy drawings

The caddy is represented schematically in tne following drawings:

Figure 1 shows a typical optical disk cartridge
Figure 2 shows the caddy bottom surface
Figure 3 shows the caddy top surface
Figure 4 shows the caddy write protect tabs
Figure 5 shows the caddy overall dimensions
Figure 6 shows the caddy door opener force location
Figure 7 shows the caddy window location
Figure 8 shows the caddy autoload drive surfaces

10.3 Relationship of sides and interface with carrier

10.3.1 Relationship of sides

The caddy shall be interchangeable with any carrier and shall accept a carrier with either Side A up or Side B up.

10.3.2 Interface with carrier

The caddy shall mechanically retain the carrier and optical disk sub-assembly. The caddy shall allow the carrier and optical disk sub-assembly to be loaded and unloaded through the caddy door.

10.3.3 Write protect features (see figure 4)

The caddy shall have write-protect features to interface with the carrier. Side A of the optical disk shall be down and write-protected under the following conditions:

a) The letter "A" is correctly seen on the carrier label when viewed through the caddy window.

b) The left write protect tab is positioned so that the arrow on the tab is in alignment with the arrow on the caddy.

Copyright International Organization for Standardization
Provided by IHS under license with ISO
No reproduction or networking permitted without license from IHS
Not for Resale

c) The carrier write protect feature blocks the write protect holes in the carrier (see 11.11).

d) The write protect mode selected shall remain with the carrier when loaded into a disk drive and the caddy is removed from the disk drive.

e) The caddy write protect tabs shall be automatically moved into the position that is consistent with the carrier write protect mode when the carrier and optical disk sub-assembly is reloaded into a caddy.

10.4 Materials

The caddy shall be constructed from any suitable materials such that it meets the requirements of this International Standard.

10.5 Mass

The total mass of the empty caddy shall be less than 1,5 kg.

10.6 Caddy dimensions

10.6.1 Overall dimensions of the caddy (see figure 5)

The length, width, and height of the caddy shall be:

L_1 = 443,76 mm ± 1,50 mm

L_2 = 421,84 mm ± 0,64 mm

L_3 = 25,40 mm ± 0,51 mm

10.6.2 Opening force of the caddy door (see figure 6)

The caddy door shall be opened by a force applied at the following locations:

L_4 = 35,81 mm ± 3,2 mm

L_5 = 12,70 mm ± 1,5 mm

The opening force shall be:

F_1 = 7,50 N min.

10.6.3 Location of the caddy window (see figure 7)

The location of the caddy window from caddy side shall be:

L_6 = 151,0 mm ± 0,64 mm

The width of the window shall be:

L_7 = 101,0 mm min.

The location of the window from the caddy top or bottom surface shall be:

L_8 = 6,35 mm ± 0,25 mm

The height of the window shall be:

L_9 = 12,50 mm min.

10.6.4 Caddy write protect tabs (see figure 4)

A caddy write protect tab shall be enabled when an arrow on the tab is in alignment with an arrow on the caddy. The write protect conventions are specified in 10.3.3.

10.6.5 Caddy autoload drive surfaces (see figure 8)

The drive roller surface location on the top and bottom caddy surfaces from the caddy side shall be:

Copyright International Organization for Standardization
Provided by IHS under license with ISO
No reproduction or networking permitted without license from IHS
Not for Resale

L_{10} = 9,65 mm ± 0,51 mm

The width of the roller surface of the drive shall be:

L_{11} = 38,10 mm max.

The force exerted on drive roller surface by the drive roller shall be:

F_2 = 62,30 N max.

--`,,```,,,,````-`-`,,`,,`,`,,`---

Copyright International Organization for Standardization
Provided by IHS under license with ISO
No reproduction or networking permitted without license from IHS

Not for Resale

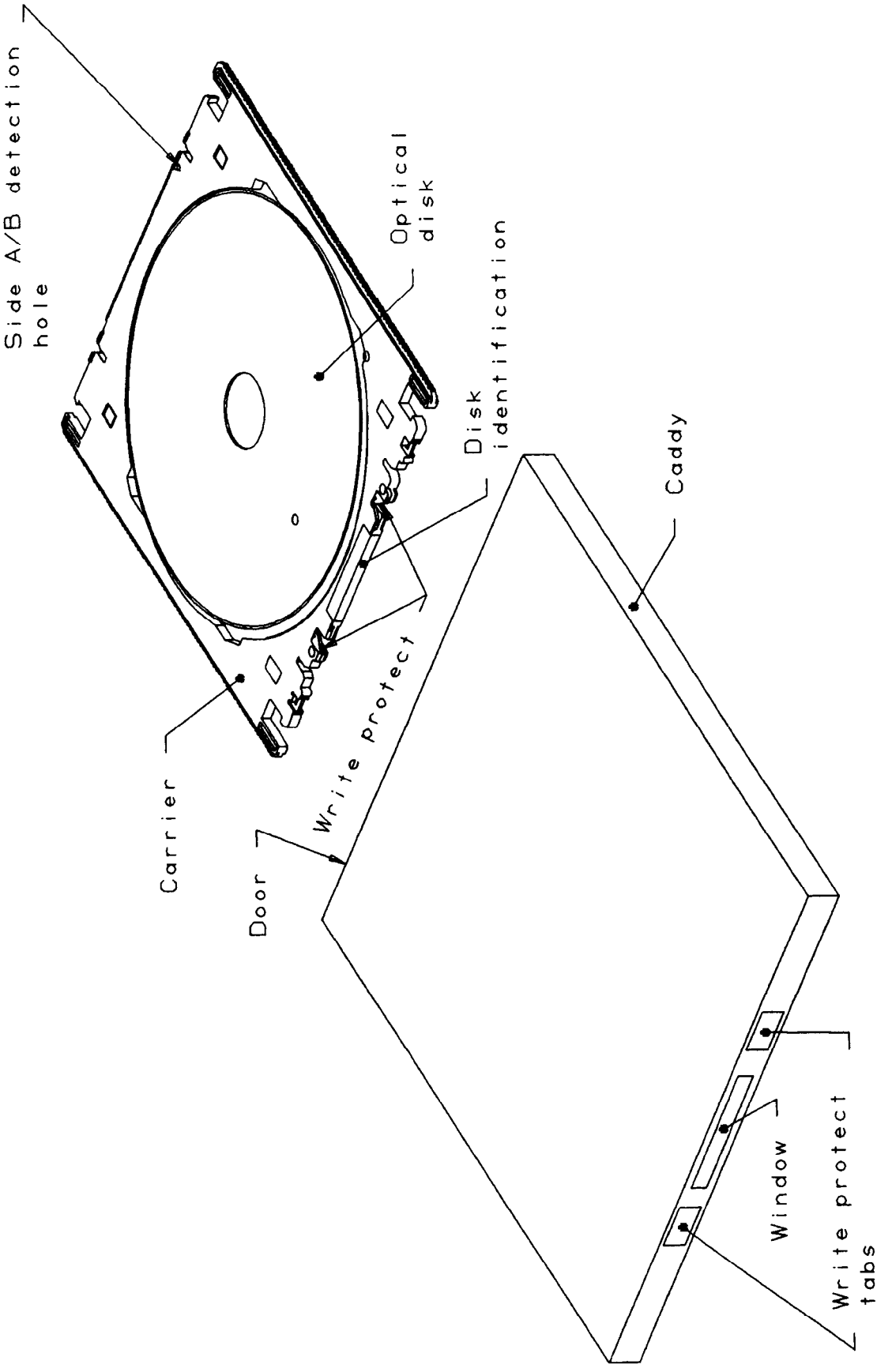

Figure 1 - Optical disk cartridge

Copyright International Organization for Standardization
Provided by IHS under license with ISO
No reproduction or networking permitted without license from IHS
Not for Resale

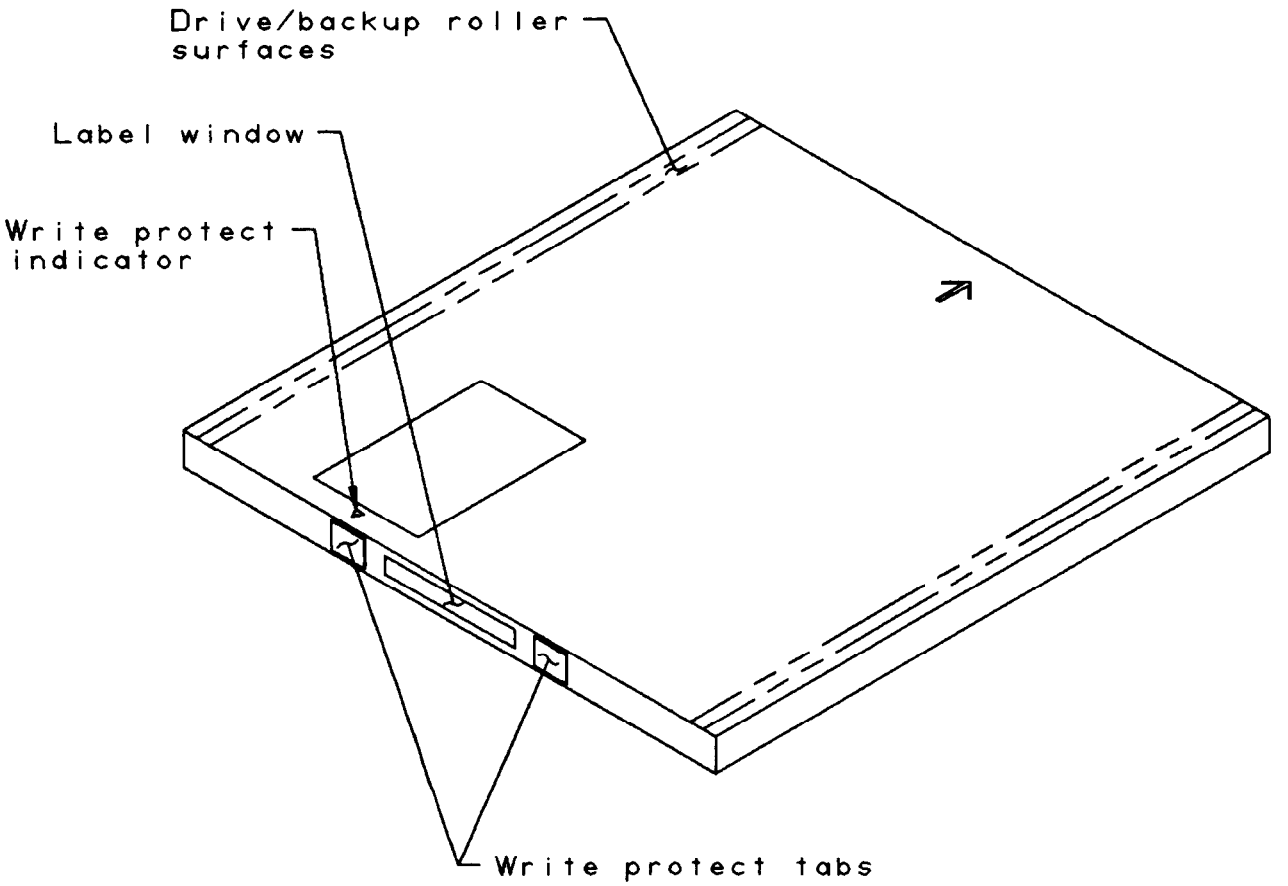

Figure 2 - Caddy bottom surface

Copyright International Organization for Standardization
Provided by IHS under license with ISO
No reproduction or networking permitted without license from IHS
Not for Resale

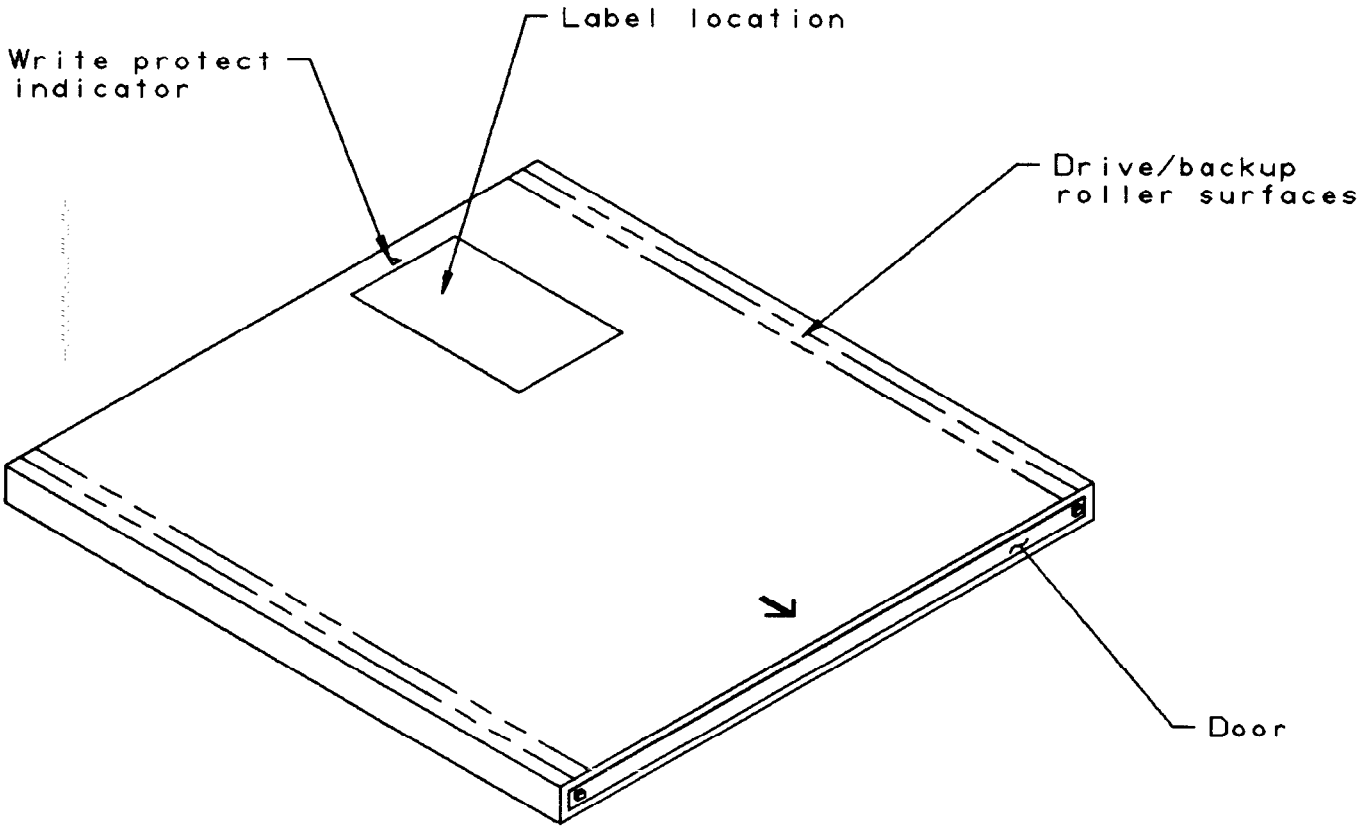

Figure 3 - Caddy top surface

Copyright International Organization for Standardization
Provided by IHS under license with ISO
No reproduction or networking permitted without license from IHS
Not for Resale

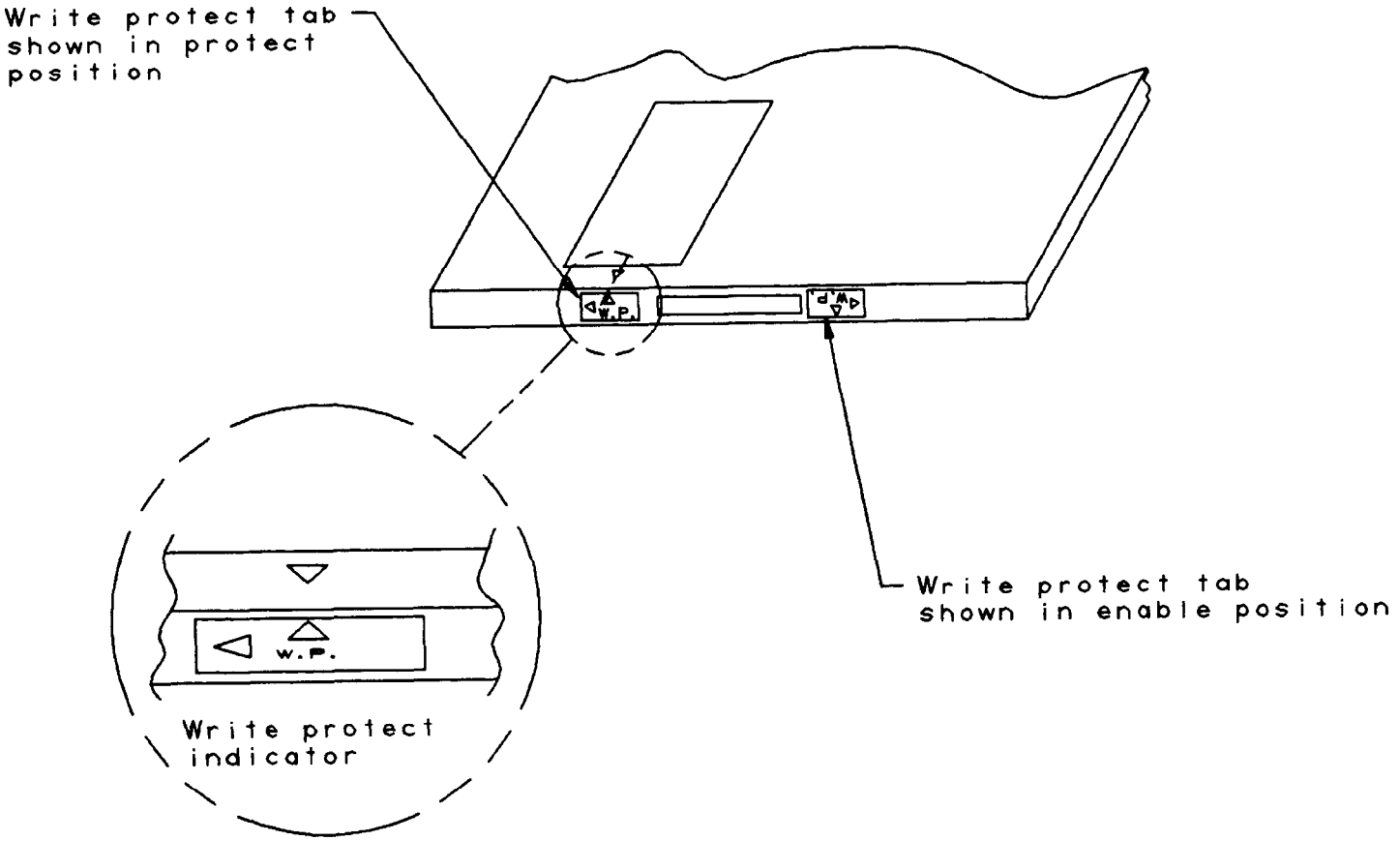

Figure 4 - Caddy write-protect tabs

Copyright International Organization for Standardization
Provided by IHS under license with ISO
No reproduction or networking permitted without license from IHS
Not for Resale

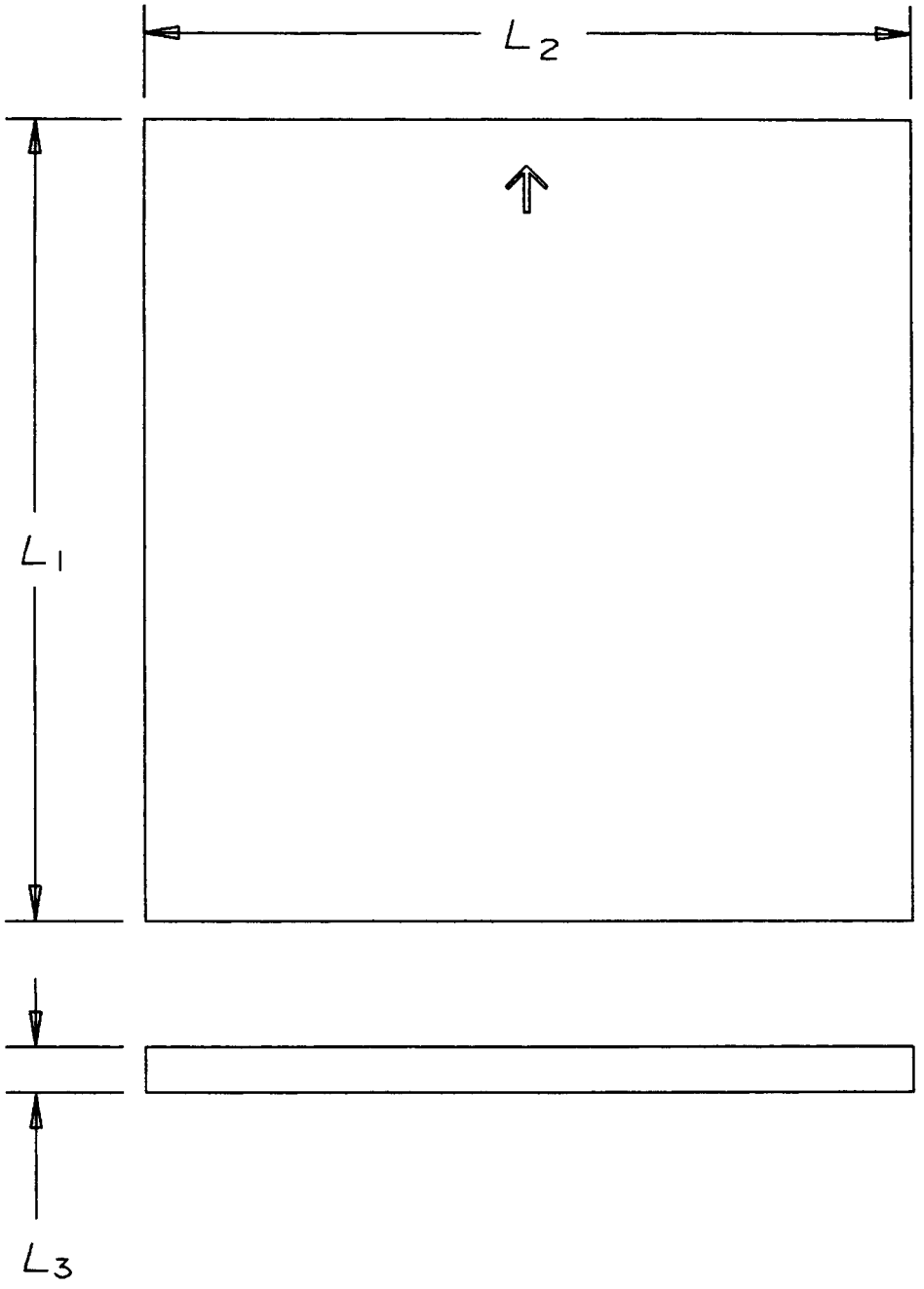

Figure 5 - Caddy overall dimensions

Copyright International Organization for Standardization
Provided by IHS under license with ISO
No reproduction or networking permitted without license from IHS
Not for Resale

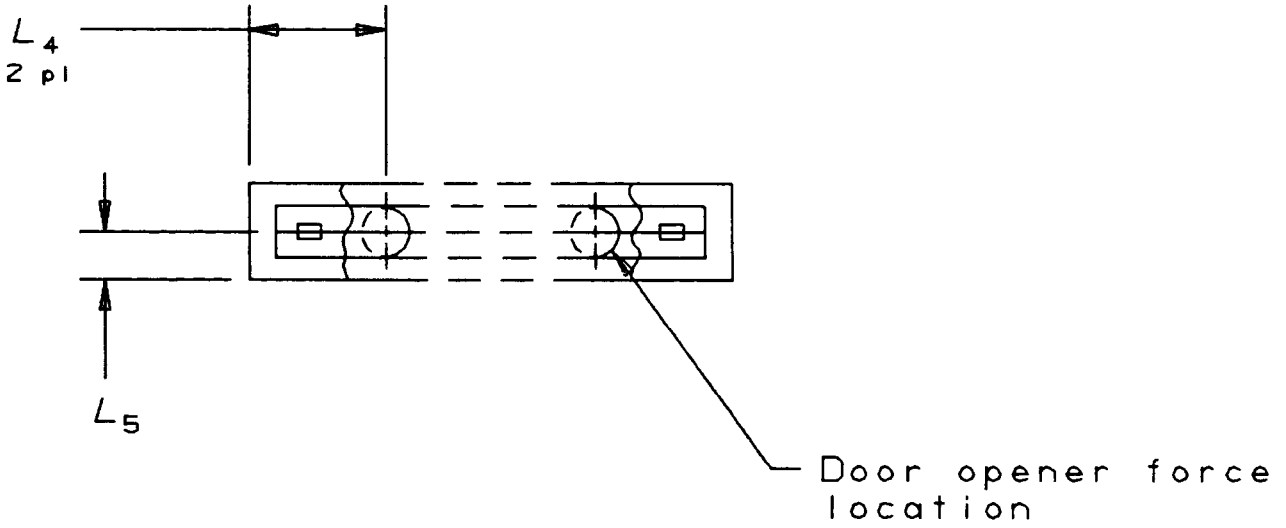

Figure 6 - Caddy door opener force location

Copyright International Organization for Standardization
Provided by IHS under license with ISO
No reproduction or networking permitted without license from IHS
Not for Resale

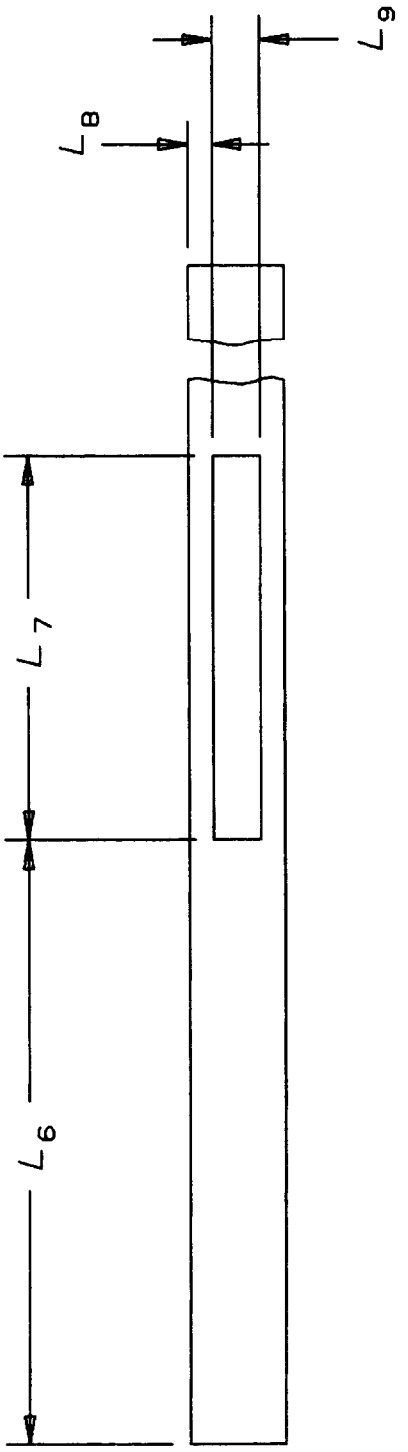

Figure 7 - Caddy window location

Copyright International Organization for Standardization
Provided by IHS under license with ISO
No reproduction or networking permitted without license from IHS
Not for Resale

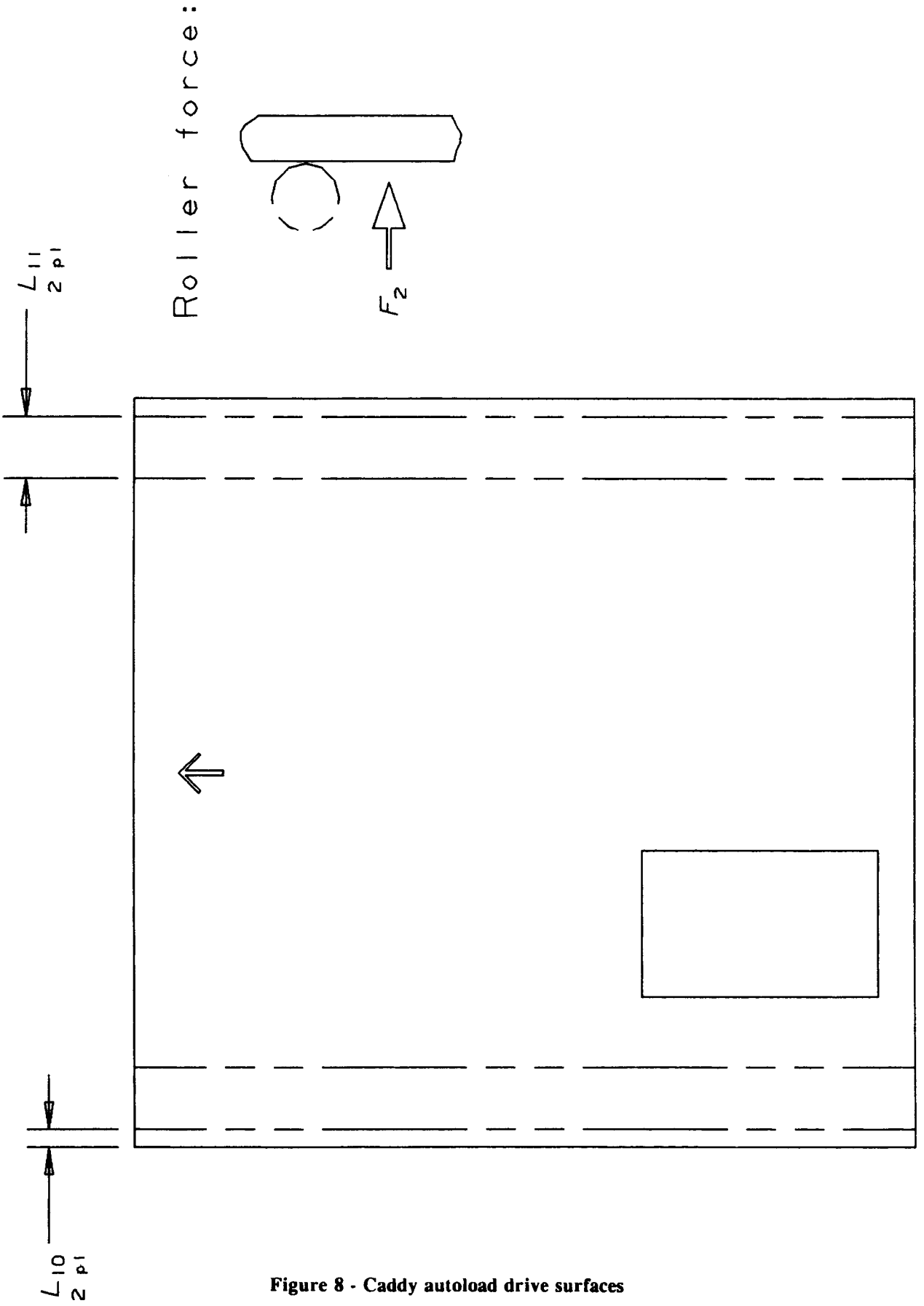

Figure 8 - Caddy autoload drive surfaces

Copyright International Organization for Standardization
Provided by IHS under license with ISO
No reproduction or networking permitted without license from IHS
Not for Resale

11 Dimensional and mechanical characteristics of the carrier

11.1 General (see figures 9 and 11)

The function of the carrier is to capture and retain the optical disk and to provide the interface to optical disk drives and automated library storage equipment.

The carrier shall be capable of supporting and retaining an optical disk while being manipulated or moved to any position during transportation or storage in a caddy, during load into and unload from a disk drive and while being moved by automated library storage devices.

The carrier and optical disk shall be permanently mated and are interchangeable as a sub-assembly. The optical disk is separated from the carrier only when the disk is mounted on the disk drive spindle.

The carrier shall provide symmetry for optical disk centreline location regardless of the orientation of the optical disk and carrier sub-assembly in the disk drive.

Both the carrier label end and the opposite end shall be able to be inserted into the storage cells of automated library storage equipment with Side A either up or down.

Both the carrier label end and the opposite end shall be able to be inserted into a disk drive incorporated within automated library storage equipment with Side A either up or down.

The carrier shall enable release of the optical disk by the disk drive during loading of the optical disk on to the disk drive spindle. The four carrier latch release holes provide the interface to the disk drive for applying a force F_3 to unlatch the carrier and to release the disk.

The carrier latch points, locator pin slots, and latch release holes in conjunction with the disk drive's carrier and disk handling devices shall enable the disk drive to maintain a common centreline between the disk and the disk drive spindle during disk release from the carrier and during disk centring and clamping to the disk drive spindle.

The separated carrier and the spindle mounted and clamped optical disk shall allow unobstructed access to the recording zone by a recording head scanning in from the outer edge.

The mating carrier shall recapture the optical disk upon dismount of the optical disk from the spindle by the disk drive.

The carrier label shall indicate the optical disk Side A and Side B and the proper orientation shall be maintained between the optical disk side and the carrier label.

The main elements of the carrier are tooth racks, latch points, locator pin slots, Side A and Side B hole, write protect holes, latch release holes, disk type sensor notches, and a label area.

11.2 Carrier drawings

The carrier is represented schematically by the following drawings:

Figure 9 shows a typical carrier
Figure 10 shows the optical disk centre location in the carrier
Figure 11 shows the overall carrier dimensions
Figure 12 shows the write protect definition
Figure 13 shows the side A and side B sensor hole
Figure 14 shows the carrier location within the caddy
Figure 15 shows the carrier locator slot locations when the carrier is inside the caddy
Figure 16 shows carrier latch point locations when the carrier is inside the caddy
Figure 17 shows carrier latch release hole locations
Figure 18 shows carrier latch release hole locations when the optical disk is released.
Figure 19 shows carrier locator pin slot locations

Copyright International Organization for Standardization
Provided by IHS under license with ISO
No reproduction or networking permitted without license from IHS
Not for Resale

Figure 20 shows the carrier label location
Figure 21 shows the carrier label

11.3 Sides, reference axes and reference planes

11.3.1 Relationship between Side A and Side B (see figure 9)

The carrier label shall indicate the optical disk Side A and Side B and the proper orientation shall be maintained between the optical disk side and the carrier label.

The Side A of the optical disk shall face downwards when the carrier label Side A is correctly seen when viewed through the caddy window.

11.3.2 Reference axes and reference features (see figure 12)

Datum A is the top or bottom carrier rail surface. Datum B consists of two carrier latch points. Datum C is a carrier locator pin slot. The two carrier latch points at either end of the carrier define the datum B dependent upon which carrier end is inserted first into automated library storage equipment. Any one of the four locator pin slots defines the C datum dependent upon carrier orientation.

11.4 Materials

The carrier shall be constructed from any suitable materials such that it meets the requirements of this International Standard.

11.5 Mass

The mass of the carrier without the optical disk shall not exceed 600 g.

11.6 Location of the optical disk centre in the carrier (see figure 10)

The carrier shall locate the optical disk centre with respect to the carrier latch points and the carrier locator pin slot as follows:

L_{12} = 199,42 mm ± 0,51 mm
L_{13} = 112,98 mm ± 0,51 mm

11.7 Overall dimensions of the carrier (see figure 11)

The overall length of the carrier shall be:

L_{14} = 423,62 mm ± 0,90 mm

The overall width of the carrier shall be:

L_{15} = 406,25 mm ± 0,51 mm

The width of the carrier guide rail shall be:

L_{16} = 396,14 mm ± 0,51 mm

The location of the carrier lead edge from datum B shall be:

L_{17} = 12,40 mm ± 0,25 mm

The width of the carrier lead edge shall be:

L_{18} = 5,08 mm ± 0,25 mm

The length of the carrier lead edge shall be:

L_{19} = 70,60 mm min.

The location of the lead edge from datum C shall be:

L_{20} = 44,50 mm max.

Copyright International Organization for Standardization
Provided by IHS under license with ISO
No reproduction or networking permitted without license from IHS
Not for Resale

11.8 Cutouts (see figure 11)

The carrier shall have cutouts to provide clearance for disk drive devices for handling of the optical disk during spindle mounting and dismounting operations.

The location of the cutouts shall be:

L_{21} = 102,40 mm min.
L_{22} = 87,60 mm min.
L_{23} = 68,80 mm max.
L_{24} = 172,0 mm min.

The cutout angle shall be:

A_1 = 30° max.

11.9 Carrier latch points and latch actuation force (see figure 11)

The carrier latch point location from datum C shall be:

L_{25} = 56,13 mm ± 0,36 mm
L_{26} = 282,09 mm ± 0,36 mm

The carrier length when the carrier is unlatched and the disk is released shall be:

L_{27} = 438,56 mm ± 1,12 mm

The carrier latch actuation force is applied at the carrier latch release holes as indicated in figure 11. The latch actuation force shall be:

F_3 = 18,0 N min.

11.10 Carrier guide rails and carrier thickness (see figure 11)

The carrier features a guide rail on each side for interface with disk drive and automated library carrier handling devices.

The rail lead in angle shall be:

A_2 = 30° ± 2°

The depth of the rail shall be:

L_{28} = 2,92 mm ± 0,13 mm

The pitch of the rail teeth shall be:

L_{29} = 5,08 mm ± 0,25 mm

The clearance of the rail teeth shall be:

L_{30} = 1,27 mm ± 0,13 mm

Except the lead tooth, all teeth shall have a flat top surface:

L_{31} = 1,27 mm ± 0,25 mm

The location of the lead tooth shall be:

L_{32} = 6,22 mm ± 0,25 mm

The location of the lead tooth on one rail relative to the location of the lead tooth on the other rail shall be within ± 0,76 mm.

The flat surface of the lead tooth shall be:

L_{33} = 0,51 mm ± 0,13 mm

Copyright International Organization for Standardization
Provided by IHS under license with ISO
No reproduction or networking permitted without license from IHS
Not for Resale

The angle of the flanks of the teeth with the rail shall be rounded off by a radius:

R_1 = 0,38 mm ± 0,25 mm

The angle formed by the flanks of two adjacent teeth shall be:

A_3 = 50° ± 2°

The end surfaces of the rail shall be rounded off by a radius:

R_2 = 3,175 mm ± 0,500 mm

Tooth profile tolerances shall not be cumulative.

The thickness of the carrier rail shall be:

L_{34} = 3,81 mm ± 0,13 mm

The carrier thickness shall be:

L_{35} = 10,29 mm max.

The disk drive force on the carrier rail shall be applied to the carrier rail as indicated in figure 11 and shall be:

F_4 = 9,0 N min.

11.11 Carrier write protect hole (see figure 12)

The four write protect holes are located from the carrier centreline and datum C. When the carrier is unlatched and the optical disk is released and clamped to the spindle, the locations shall be:

L_{36} = 193,70 mm ± 0,51 mm
L_{37} = 201,65 mm ± 0,51 mm
L_{38} = 204,52 mm ± 0,51 mm
L_{39} = 21,44 mm ± 0,51 mm

The diameter of the four write protect holes shall be:

D_1 = 6,10 mm min.

11.12 Carrier Side A or Side B sensor hole (see figure 13)

A sensor hole shall be located opposite to the write protect carrier end to enable the disk drive to sense Side A and Side B of the optical disk.

The design centre for the hole diameter and the location from the carrier latch point (datum B) and the carrier location pin slot (datum C) are:

D_2 = 6,10 mm min.

L_{40} = 2,24 mm

L_{41} = 204,52 mm

True position shall be within a circle of diameter 0,38 mm at maximum material condition.

The sensor hole is open when Side A is down in the carrier and the carrier label A is correctly seen through the caddy window.

11.13 Carrier disk type sensor notches (see figure 13)

Two notches shall be located on each end of the carrier used to capture an optical disk with a 1,2 mm thick protective layer construction. Notches shall not be present or shall be blocked on carriers used to capture an optical disk with a 90 µm thick protective layer.

Copyright International Organization for Standardization
Provided by IHS under license with ISO
No reproduction or networking permitted without license from IHS
Not for Resale

The location and size of the notches shall be as follows:

L_{42} = 59,28 mm ± 0,50 mm
L_{43} = 166,67 mm ± 0,50 mm
L_{44} = 9,53 mm ± 0,50 mm
L_{45} = 6,05 mm ± 0,50 mm

11.14 Carrier location within the caddy (see figure 14)

The carrier shall be located as follows within the caddy to enable interface with disk drive caddy and carrier handling devices:

The carrier bottom edge to caddy rail support surface shall be:

L_{46} = 3,80 mm max.

The caddy rail support location from the caddy top or bottom surface shall be:

L_{47} = 10,50 mm ± 1,27 mm

11.15 Carrier locator pin slot characteristics and location within the caddy (see figure 15)

The four carrier locator pin slots, when the carrier is in the latched position within the caddy, shall be positioned from the caddy side as follows:

L_{48} = 97,94 mm ± 2,25 mm

The carrier registration edge location from the door end of the caddy shall be:

L_{49} = 21,51 mm max.

The four carrier locator pin slots depth shall be:

L_{50} = 18,60 mm max.

The four carrier locator pin slots width shall be:

L_{51} = 5,46 mm ± 0,05 mm

The carrier locator pin slot lead in location shall be:

L_{52} = 3,45 mm ± 0,13 mm

The carrier locator pin slot lead in angle shall be:

A_4 = 34° ± 6°

11.16 Carrier latch point location when the carrier is inside the caddy (see figure 16)

The carrier latch points at the caddy door end enable the disk drive to secure the carrier allowing separation and retraction of the caddy.

The carrier rail to caddy edge shall be:

L_{53} = 11,96 mm ± 0,38 mm

The carrier latch point location from the caddy side shall be:

L_{54} = 41,81 mm ± 1,85 mm

The distance between carrier latch points shall be:

L_{55} = 338,23 mm ± 0,76 mm

The latched carrier location from the door end of the caddy shall be:

L_{56} = 29,21 mm max.

The carrier latch point clearance shall be:

Copyright International Organization for Standardization
Provided by IHS under license with ISO
No reproduction or networking permitted without license from IHS
Not for Resale

L_{57} = 22,90 mm min.

The carrier latch point width shall be:

L_{58} = 5,28 mm ± 0,25 mm

The carrier latch clearance shall be:

L_{59} = 17,45 mm ± 0,63 mm

Carrier separation and reinsertion resistance forces shall be 22 N max.

11.17 Carrier latch release hole locations (see figure 17)

The carrier latch release hole locations from datum B shall be:

L_{60} = 50,72 mm min.
L_{61} = 37,77 mm max.
L_{62} = 348,87 mm max.
L_{63} = 360,30 mm min.

The carrier latch release hole locations from datum C shall be:

L_{64} = 24,26 mm max.
L_{65} = 33,91 mm min.
L_{66} = 250,47 mm max.
L_{67} = 259,61 mm min.

A clearance for an optional carrier latch-lock feature is required. Such a feature shall be retractable upon contact with disk drive release pins. The required clearance shall be:

L_{68} = 3,38 mm max.

The carrier latch release hole angle shall be:

A_5 = 30° ± 2°

11.18 Carrier latch release hole locations for unlatched carrier (see figure 18)

The pair of carrier latch release holes at the write protect end of the carrier are a greater distance from the pair of release holes at the other end of the carrier when the carrier is unlatched to release the disk. The distance shall be:

L_{69} = 339,725 mm ± 0,510 mm

11.19 Location of carrier locator pin slots (see figure 19)

The carrier locator pin slots are datum C.

The carrier edge location from datum C shall be:

L_{70} = 85,09 mm ± 0,25 mm

The distance between locator pin slots shall be:

L_{71} = 225,95 mm ± 0,25 mm

The carrier locator pin slot lead in shall be located from the latch point as follows:

L_{72} = 7,32 mm ± 0,38 mm

11.20 Carrier label location (see figure 20)

The carrier label shall be located on the write protect end of the carrier as follows:

L_{73} = 78,49 mm ± 1,52 mm
L_{74} = 12,07 mm ± 1,52 mm

Copyright International Organization for Standardization
Provided by IHS under license with ISO
No reproduction or networking permitted without license from IHS
Not for Resale

11.21 Carrier label (see figure 21)

The carrier label size shall be as follows:

L_{75} = 78,0 mm max.
L_{76} = 22,61 mm max.

11.22 Carrier label characteristics (see figure 21)

Field 1 shall be the Side A designator. Field 2 shall be the Side B designator.

Copyright International Organization for Standardization
Provided by IHS under license with ISO
No reproduction or networking permitted without license from IHS
Not for Resale

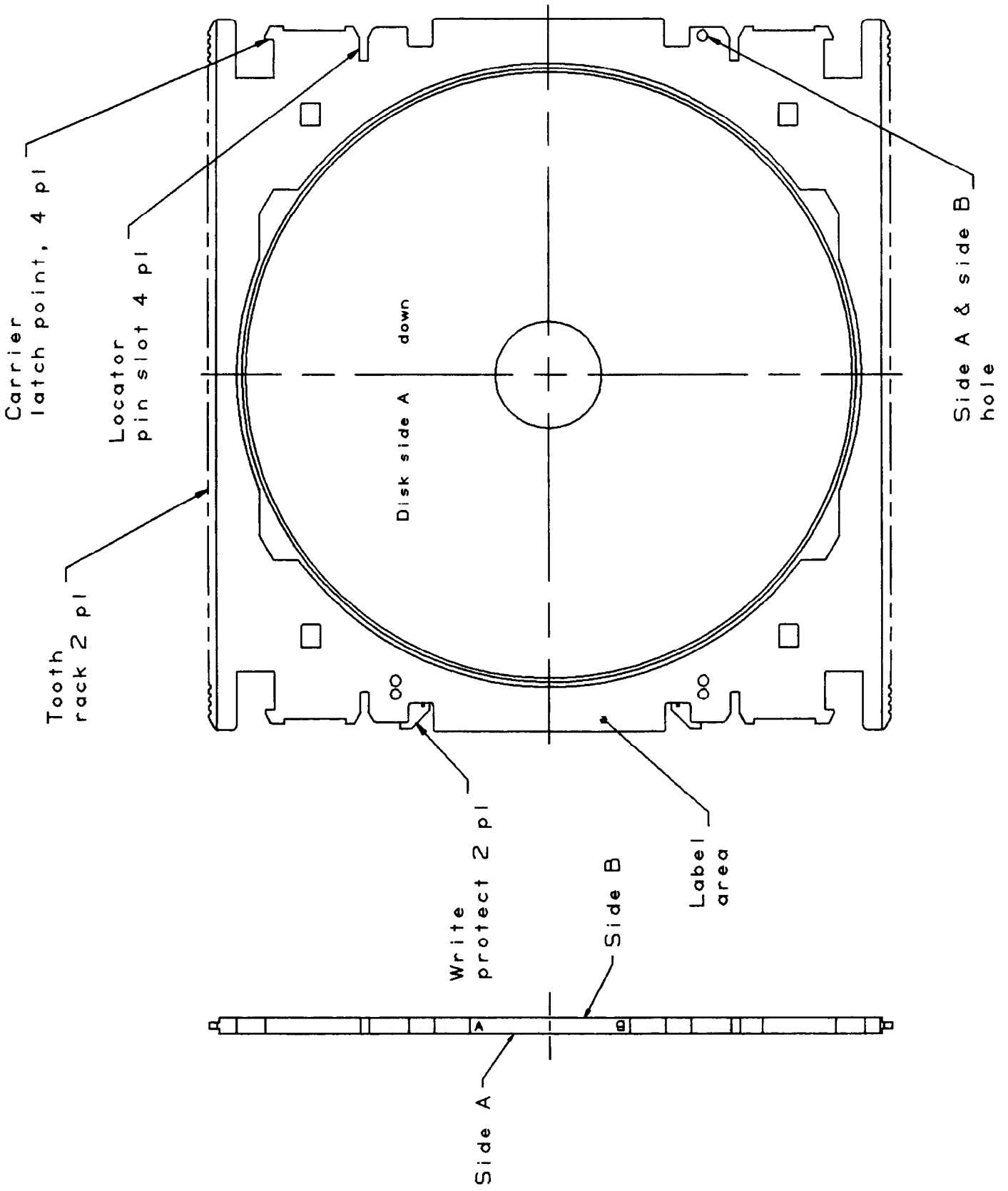

Figure 9 - Typical carrier

Copyright International Organization for Standardization
Provided by IHS under license with ISO
No reproduction or networking permitted without license from IHS
Not for Resale

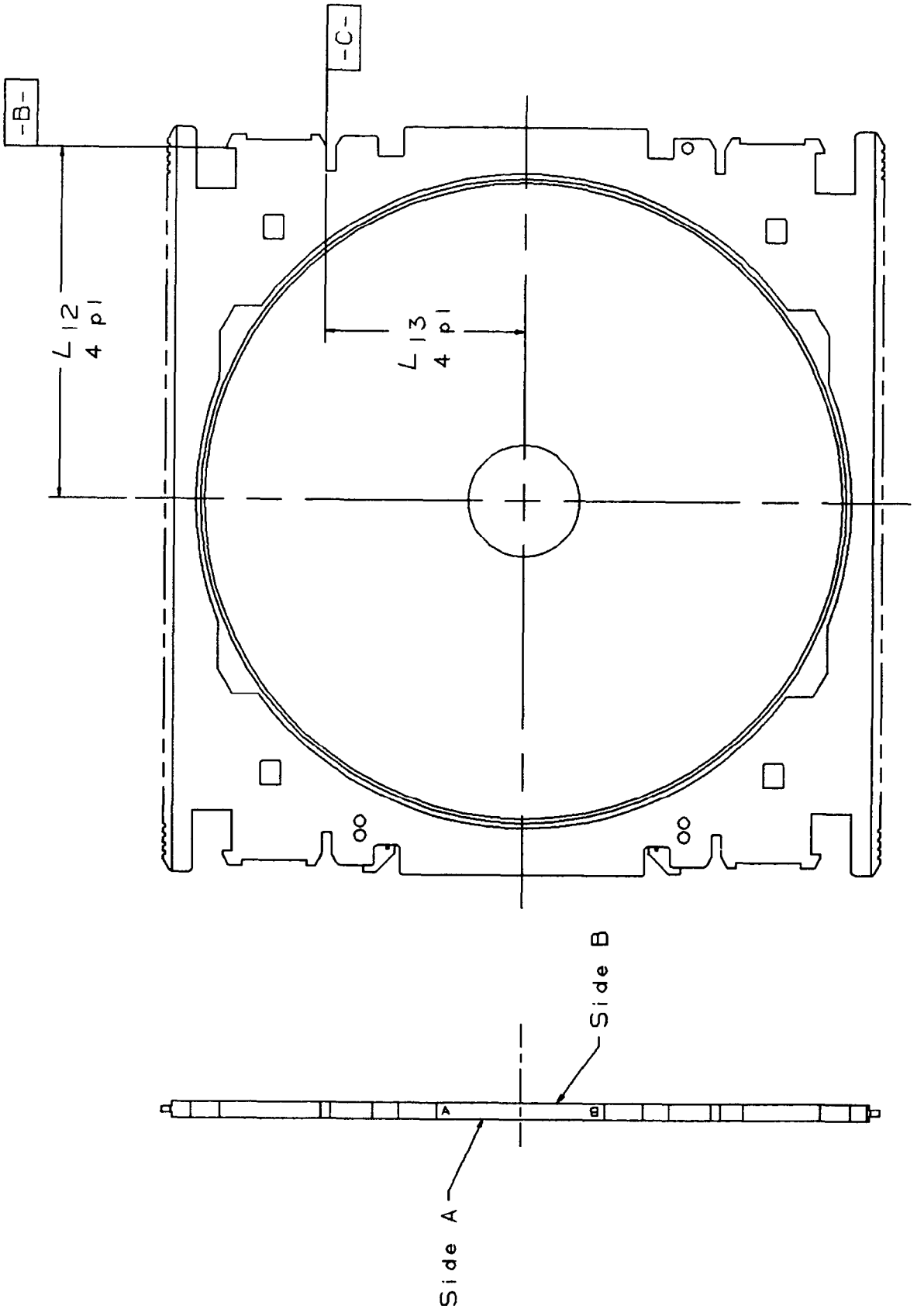

Figure 10 - Optical disk centre location in carrier

Copyright International Organization for Standardization
Provided by IHS under license with ISO
No reproduction or networking permitted without license from IHS
Not for Resale

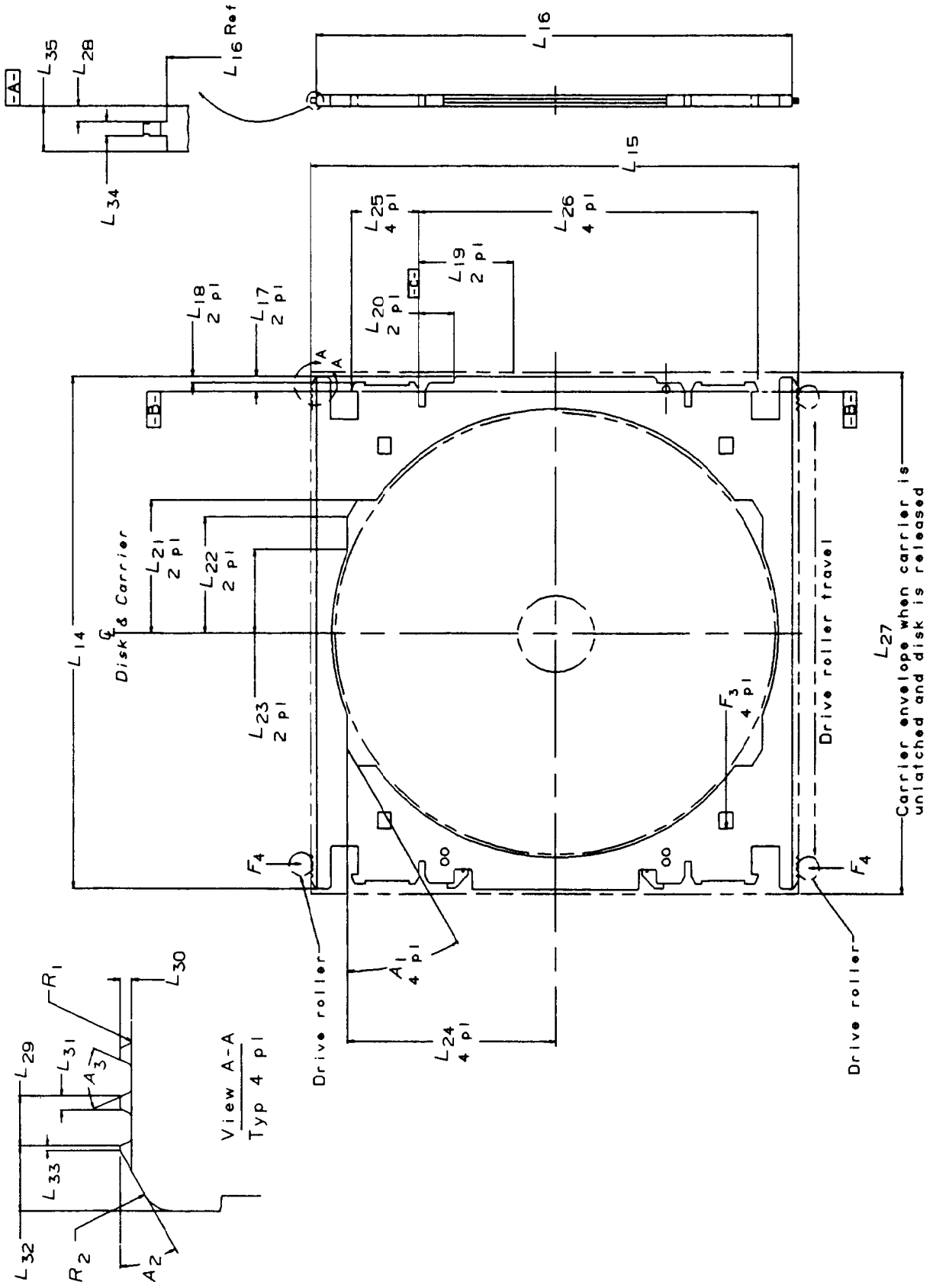

Figure 11 - Carrier dimensions

Not for Resale
Copyright International Organization for Standardization
Provided by IHS under license with ISO
No reproduction or networking permitted without license from IHS

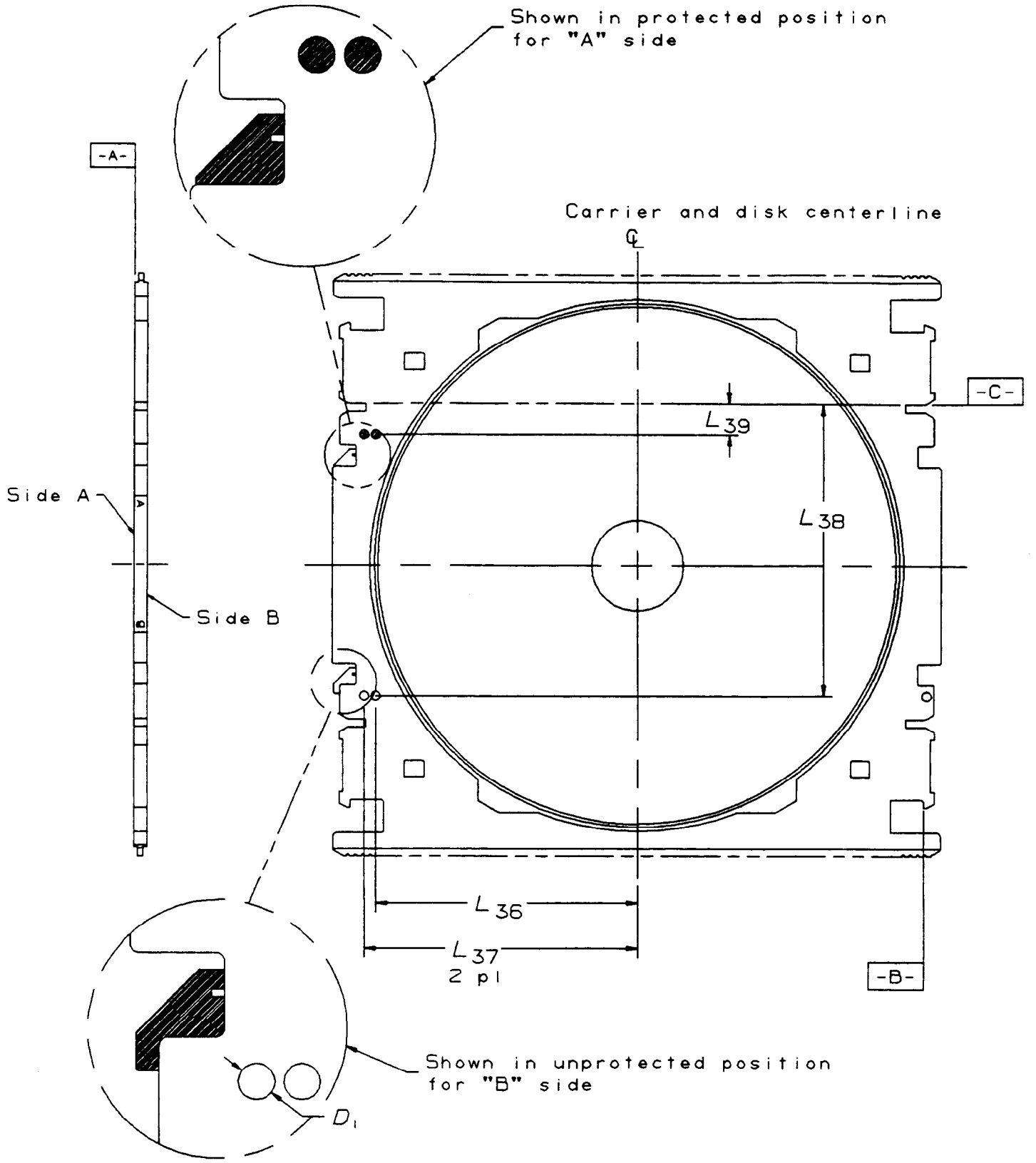

Figure 12 - Write protect definition carrier unlatched, disk clamped

Copyright International Organization for Standardization
Provided by IHS under license with ISO
No reproduction or networking permitted without license from IHS
Not for Resale

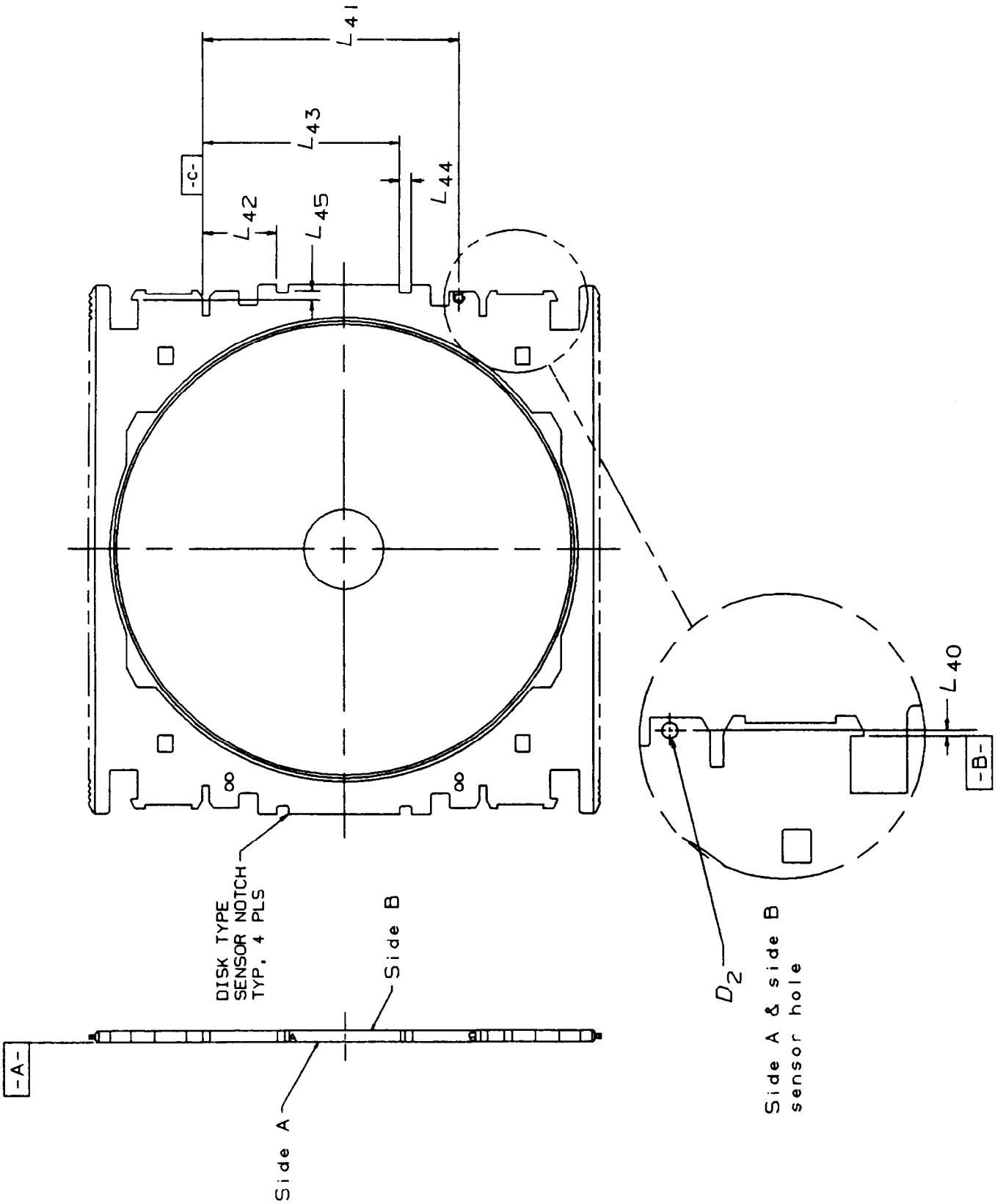

Figure 13 - Side A and Side B sensor hole and disk type sensor notches

Copyright International Organization for Standardization
Provided by IHS under license with ISO
No reproduction or networking permitted without license from IHS
Not for Resale

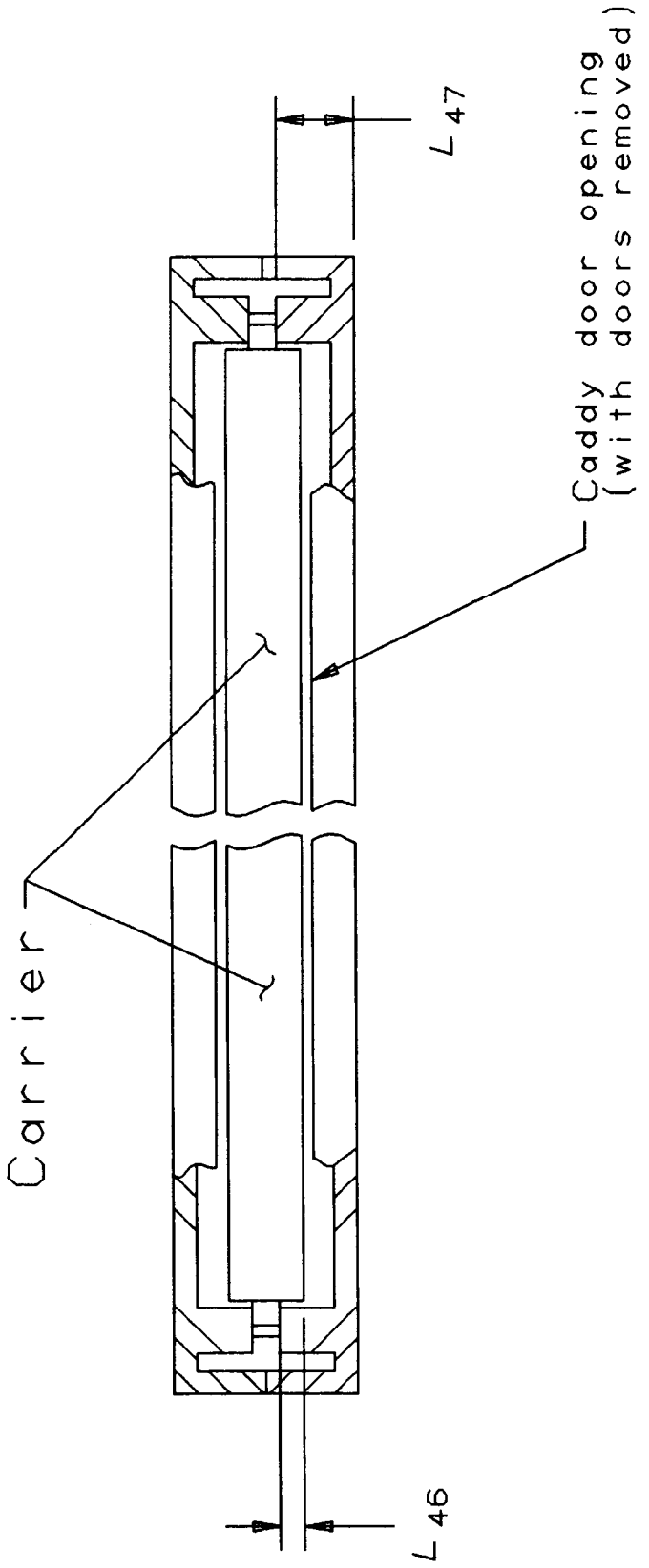

Figure 14 - Carrier location within caddy

Copyright International Organization for Standardization
Provided by IHS under license with ISO
No reproduction or networking permitted without license from IHS
Not for Resale

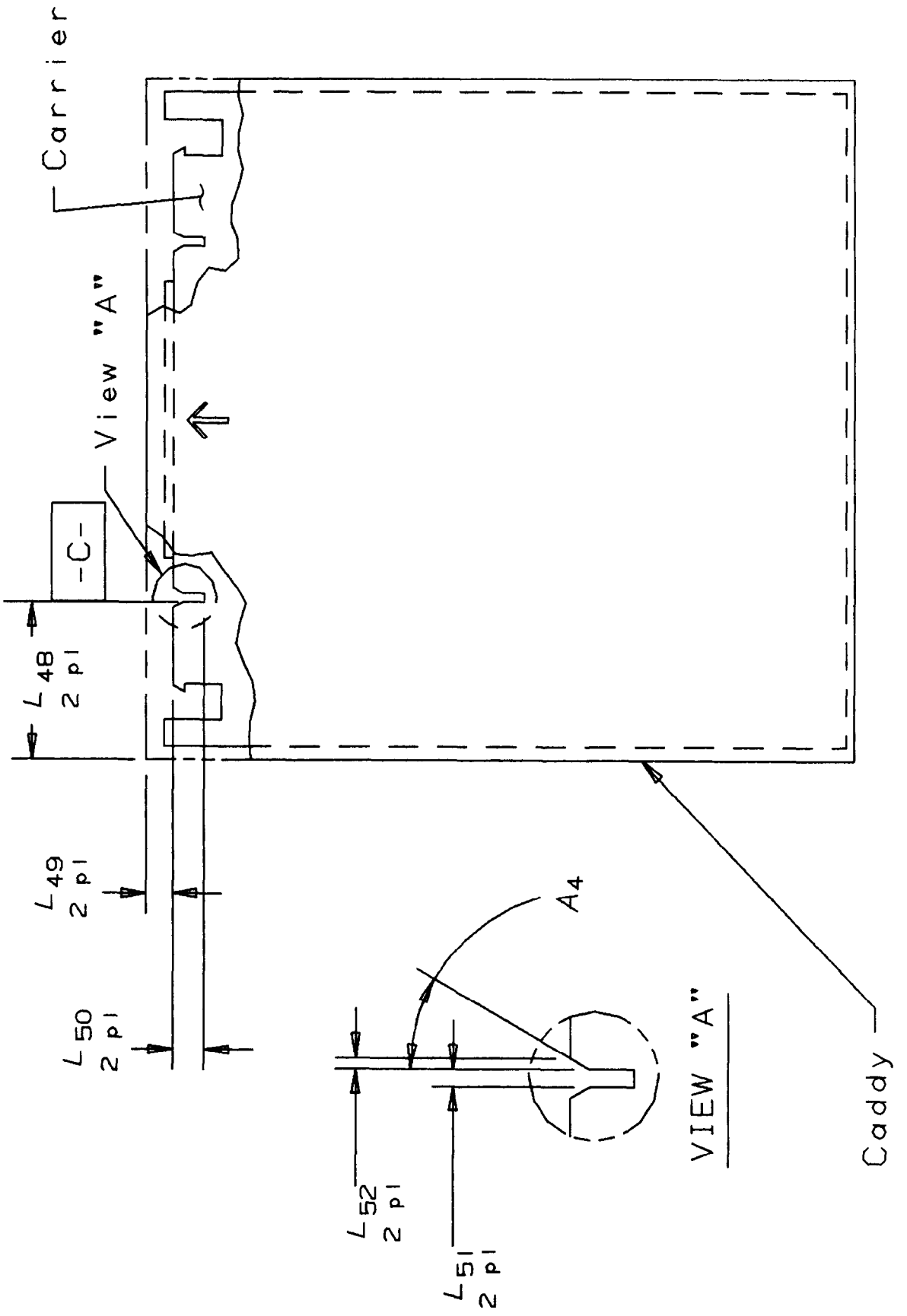

Figure 15 - Carrier locator slot locations (when carrier is inside caddy)

Copyright International Organization for Standardization
Provided by IHS under license with ISO
No reproduction or networking permitted without license from IHS
Not for Resale

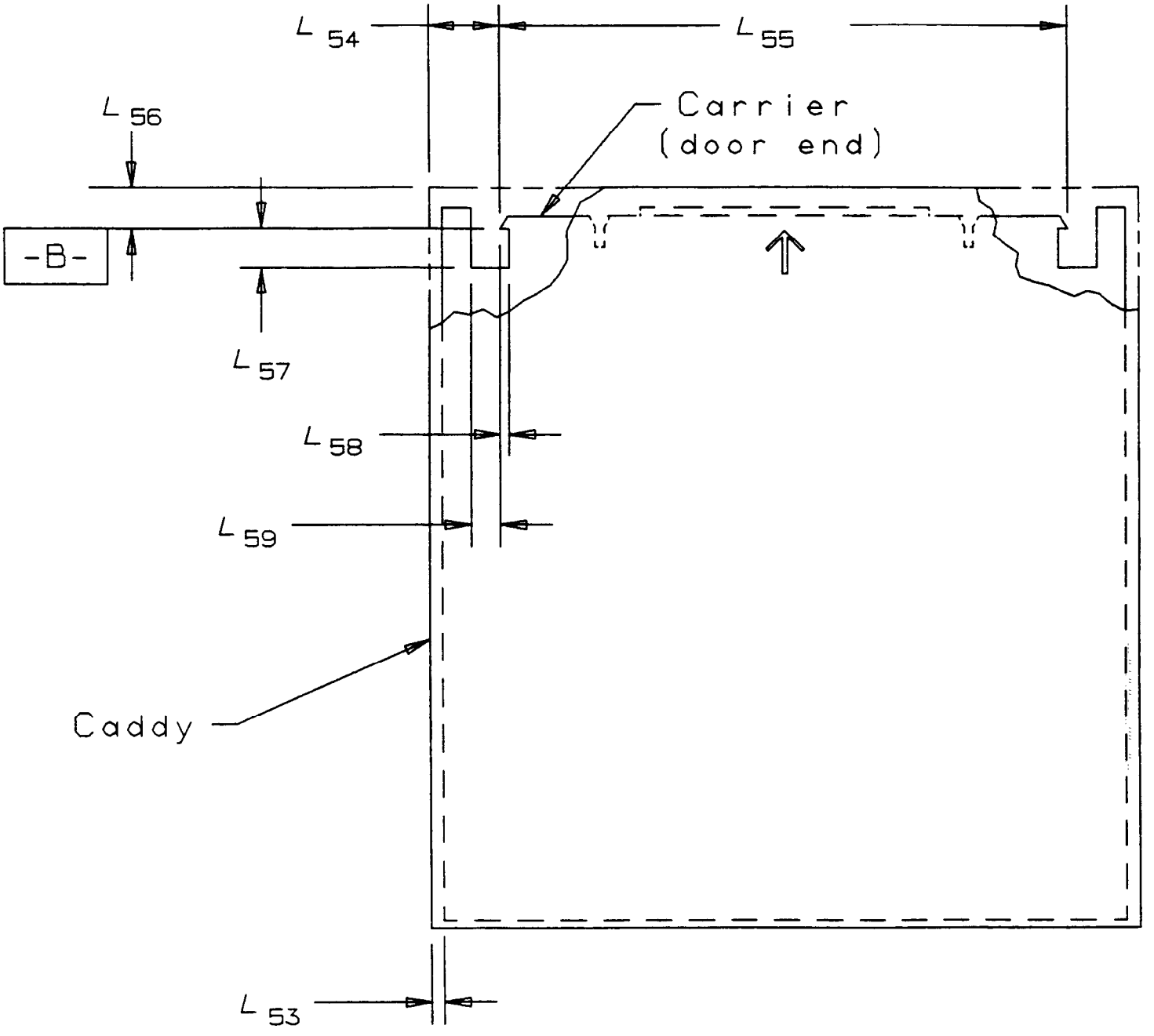

Figure 16 - Carrier latch point locations (when carrier is inside caddy)

Copyright International Organization for Standardization
Provided by IHS under license with ISO
No reproduction or networking permitted without license from IHS
Not for Resale

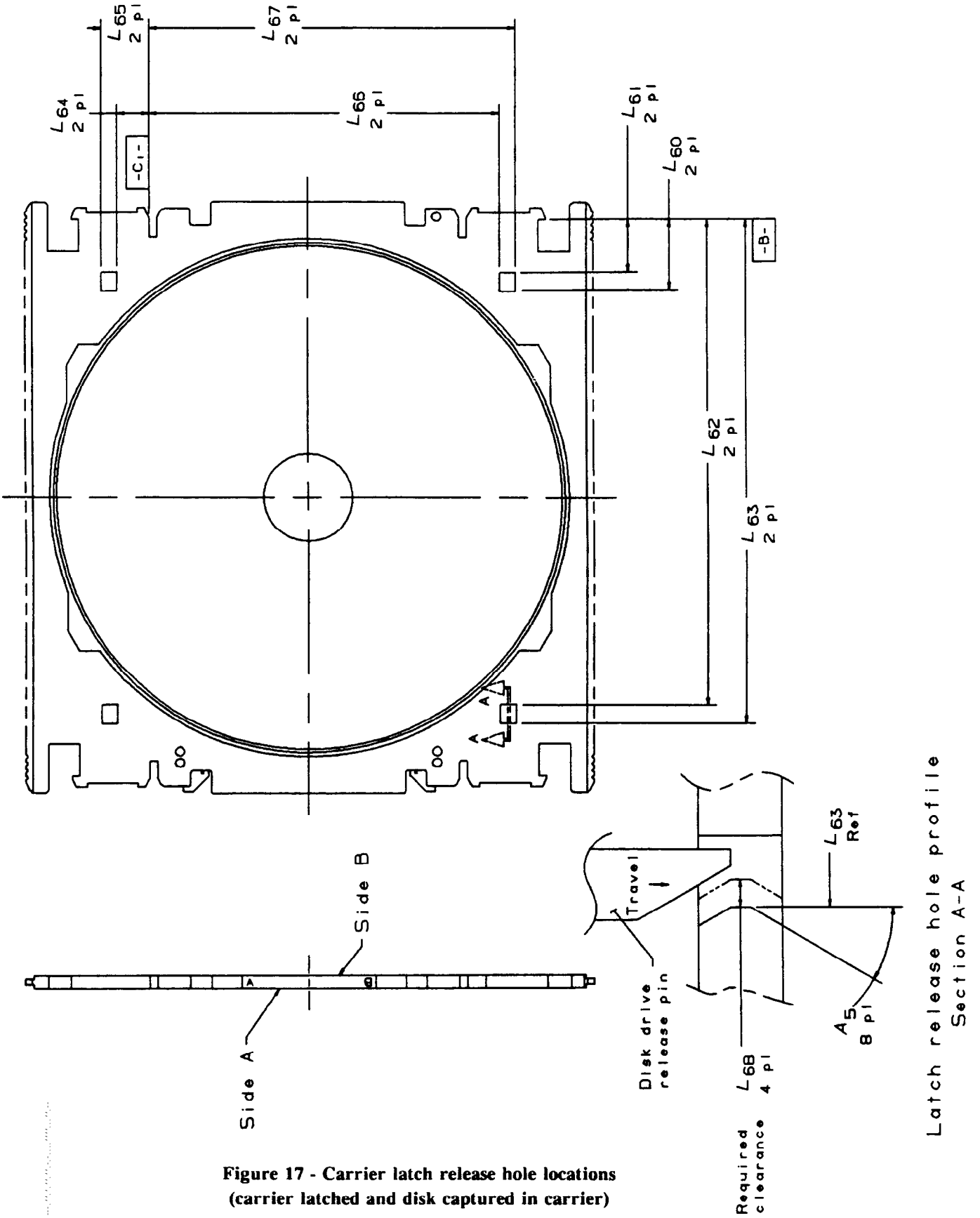

Figure 17 - Carrier latch release hole locations (carrier latched and disk captured in carrier)

Copyright International Organization for Standardization
Provided by IHS under license with ISO
No reproduction or networking permitted without license from IHS
Not for Resale

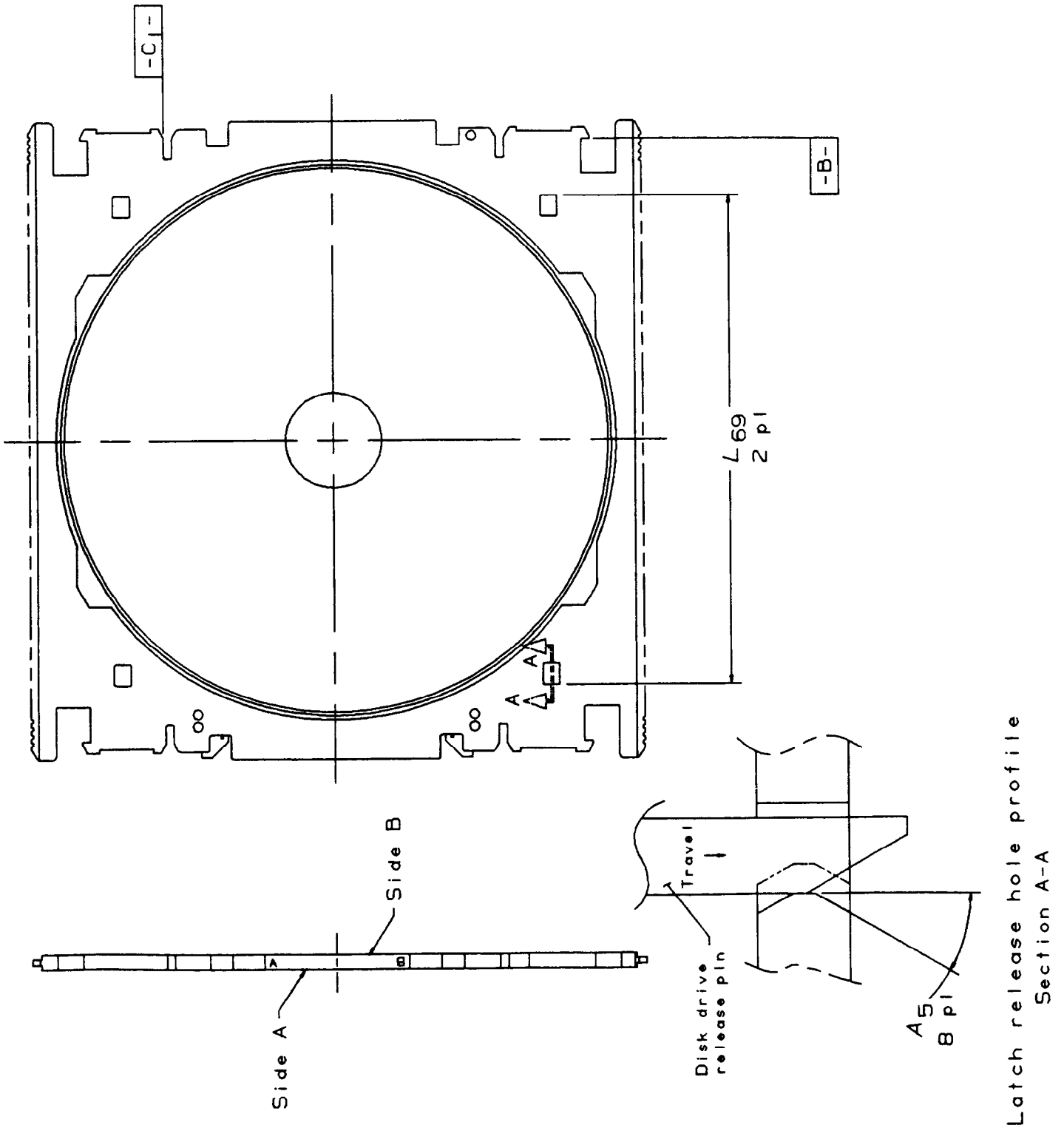

Figure 18 - Unlatched carrier latch release hole location (with disk released, mounted and clamped on spindle)

Copyright International Organization for Standardization
Provided by IHS under license with ISO
No reproduction or networking permitted without license from IHS
Not for Resale

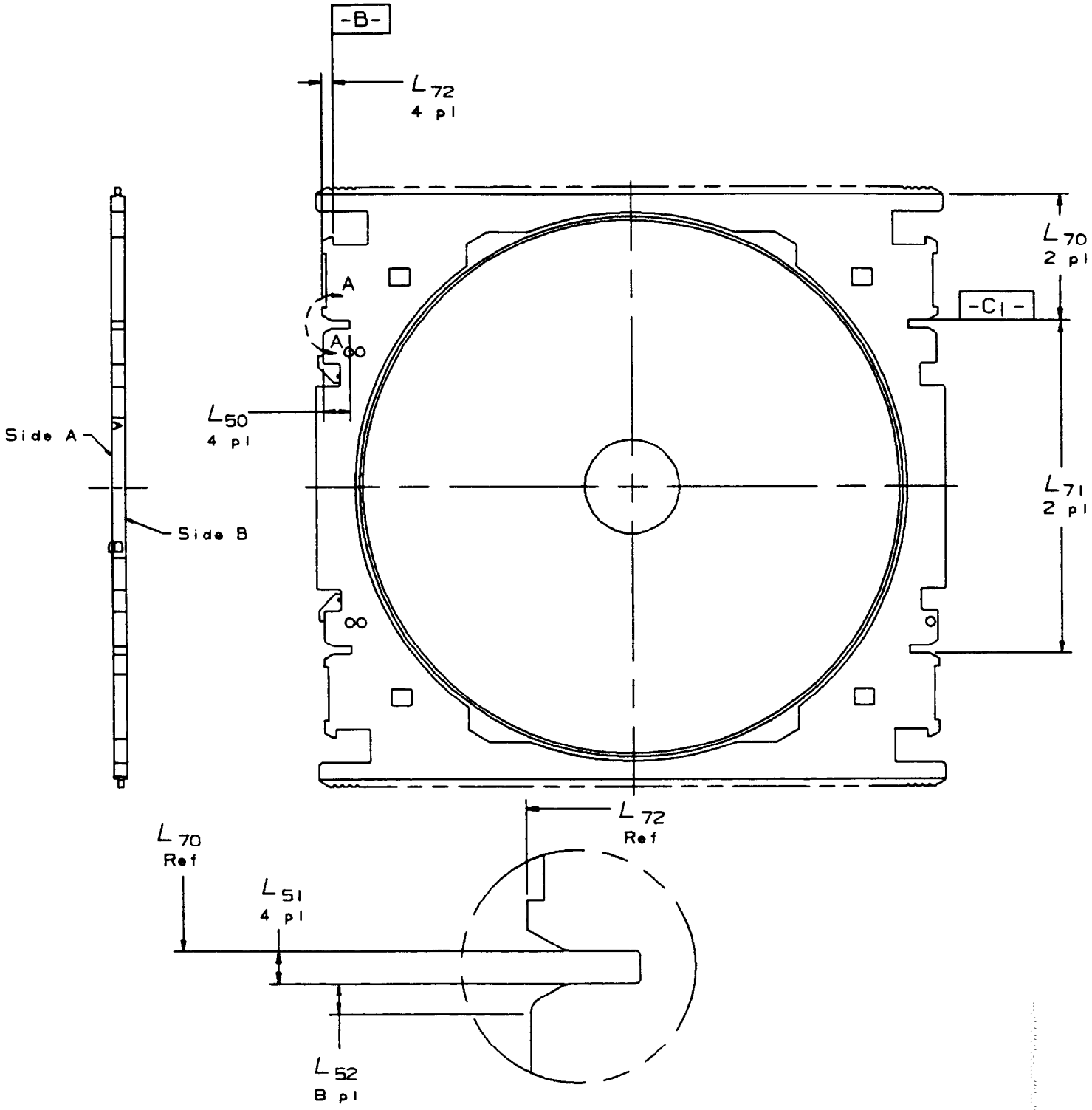

Figure 19 - Carrier locator pin slot locations

Copyright International Organization for Standardization
Provided by IHS under license with ISO
No reproduction or networking permitted without license from IHS
Not for Resale

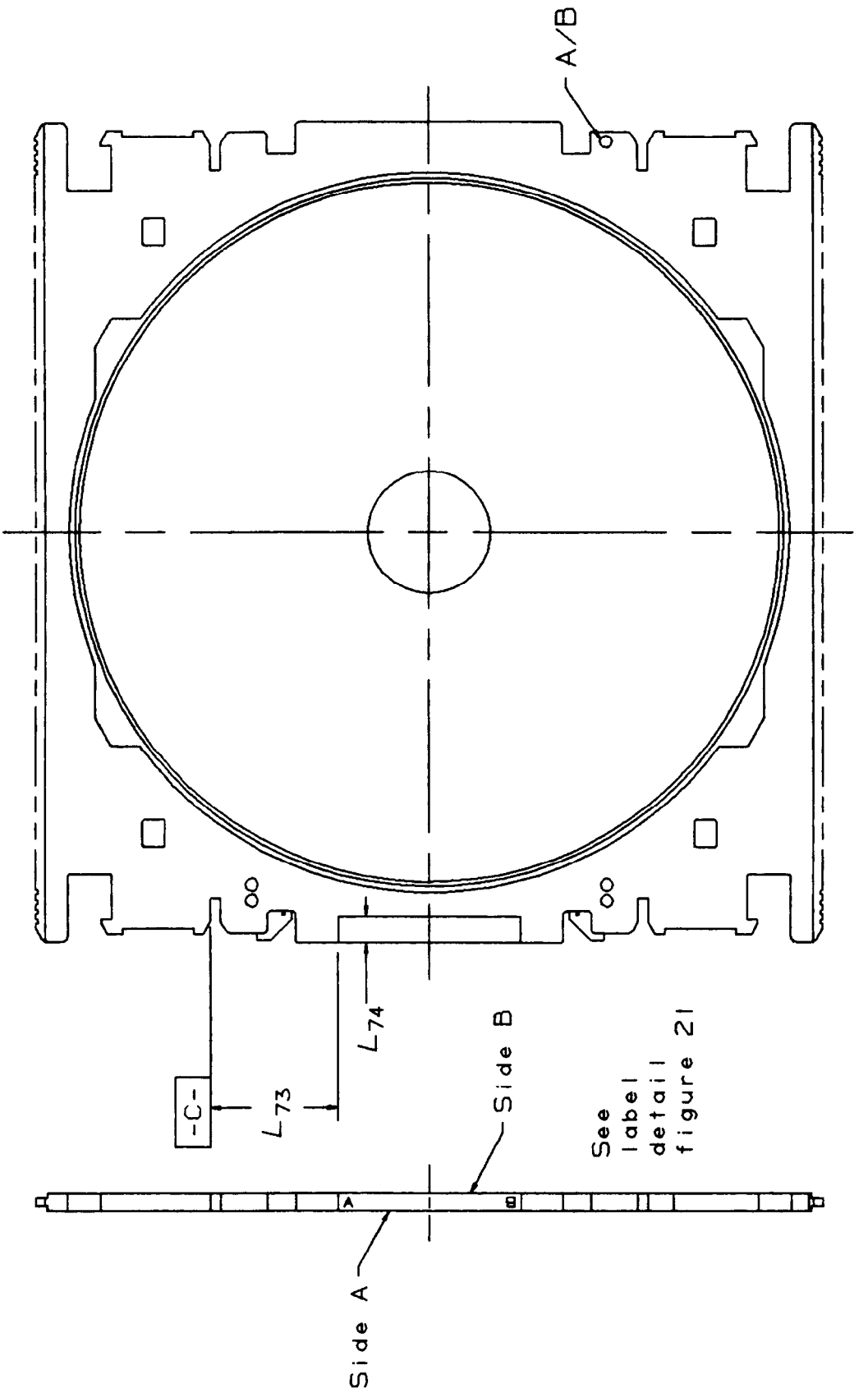

Figure 20 - Carrier label location

Copyright International Organization for Standardization
Provided by IHS under license with ISO
No reproduction or networking permitted without license from IHS
Not for Resale

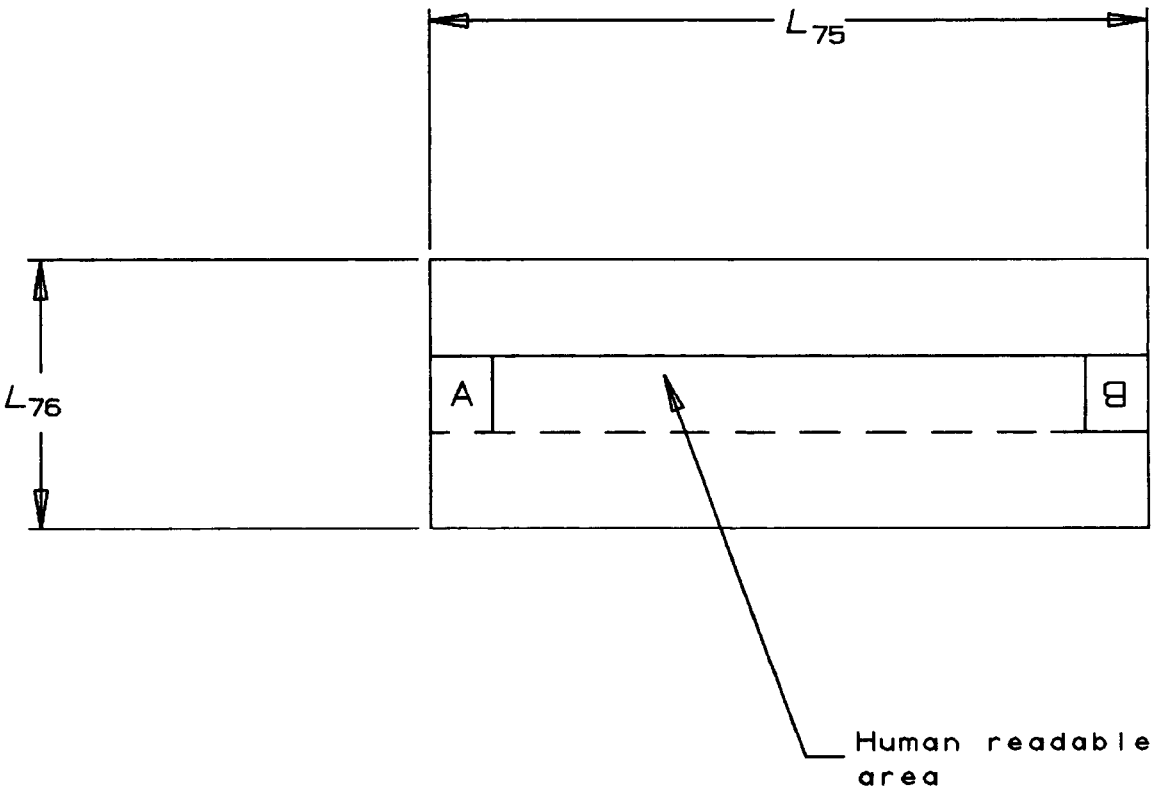

Figure 21 - Carrier label

Copyright International Organization for Standardization
Provided by IHS under license with ISO
No reproduction or networking permitted without license from IHS
Not for Resale

12 Dimensional and physical characteristics of the disk

12.1 General

12.1.1 Protective layer

This International Standard accommodates optical disks having either a 90 μm thick protective layer or a 1,2 mm thick protective layer configuration. The common dimensions and the dimensions specific to either configuration are specified below. The optical path length and plane of focus differs for the 90 μm and the 1,2 mm protective layer optical disks. Disk drives should provide a means to accommodate optical disks featuring either protective layer construction.

A disk drive manufacturer can accommodate either protective layer configuration optical disk in one drive by providing either a manual or an automatic optical head set-up capability.

One head set-up is used for 1,2 mm thick protective layer optical disks and a second set-up is used for 90 μm thick protective layer configuration optical disks. Both set-ups can use an optical head designed for use with optical disks that have a 1,2 mm thick protective layer. The set-up for use with the 90 μm thick protective layer simply uses the same optical head with a cover glass added to it. Each set-up also requires the head to be properly positioned relative to the spindle reference surface. Interchangeability is achieved by either the manual or the automatic optical head set-up capability. The manual set-up capability requires the end user to select the set-up desired and to have the set-up changed in the field. An automatic set-up capability would use the disk type sensor notches provided in the carrier to sense the disk type in the carrier and to then automatically insert or remove the cover glass and position the head closer or farther from the spindle reference surface. Both set-ups provide interchangeability and differ only in the convenience provided to the end user.

The cover glass should be stationary with respect to the focus and tracking servos of the optical head. Thus there are no differences in servo performance due to the thickness of the protective layer.

a) The main elements of a typical 356 mm optical disk with 90 μm thick protective layer are represented in figure 22A as follows:

1) Substrate
2) Coated information layers on each side of substrate
3) Spacers at the inside diameter on each side
4) Perimeter ring at the outside diameter
5) Transparent 90 μm thick protective layer on each side bonded to the spacer and perimeter ring.

b) The main elements of a typical 356 mm optical disk with a 1,2 mm thick protective layer are represented in figure 22B as follows:

	Sandwich construction:	Air gap construction:
1)	Substrate & Protective Layer	Substrate & protective layer
2)	Coated Layers	Coated layers
3)	Adhesive	Adhesive
4)	-	Spacer
5)	-	Integral hub

12.1.2 Unobstructed access

The optical disk, when loaded and clamped, shall allow unobstructed access to the recording zone by a recording head scanning in from the outer edge.

Copyright International Organization for Standardization
Provided by IHS under license with ISO
No reproduction or networking permitted without license from IHS
Not for Resale

12.2 Disk drawings

Figure 22A shows typical 90 μm thick protective layer optical disk main elements

Figure 22B shows typical 1,2 mm thick protective layer optical disk main elements

Figure 23 shows outside diameter, clamp and recording zones

Figure 24A shows 90 μm thick protective layer optical disk characteristics

Figure 24B shows 1,2 mm thick protective layer optical disk characteristics

Figure 25 shows maximum apparent axial runout

12.3 Sides, reference axes, reference plane

12.3.1 Relationship of Sides A and B

The optical disk cartridge is comprised of an optical disk, a carrier and a caddy. The optical disk is the two sided optical recording medium on which information is recorded once and read many times. The optical disk is captured by the carrier and both the optical disk and carrier are contained inside the caddy. The characteristics described in the following sections apply to each side of the optical disk.

12.3.2 Reference axes and reference planes (see figures 24A and 24B)

Unless specified otherwise, the optical disk dimensions are related to a cylindrical datum reference frame consisting of datum reference plane A and datum diameter B, perpendicular to the plane.

Datum A is the primary datum and is defined as the plane of the optical disk in contact with the reference surface. For measurement purposes, the reference surface is the plane defined by a sleeve contacting the optical disk at the datum target. See annex C.

12.4 Dimensions of the disk

All dimensions related to datum A and datum B shall be measured in conformance to annex C, Mechanical test method.

12.4.1 Outside diameter (see figure 23)

The optical disk outside diameter feature provides an interface to optical disk handling devices of a disk drive.

a) The outside diameter of the optical disk with perimeter ring shall be:

D_3 = 365,43 mm ± 0,25 mm

b) The outside diameter of the optical disk with 1,2 mm thick protective layer shall be:

D_3 = 356,24 mm ± 0,15 mm

12.4.2 Outside diameter of the recording zone (see figure 23)

The recording zone outside diameter on each side of the optical disk shall be:

D_4 = 350,00 mm min.

12.4.3 Inside diameter of the recording zone (see figure 23)

The recording zone inside diameter on each side of the optical disk shall be:

D_5 = 140,00 mm max.

12.4.4 Outside diameter of the clamping zone (see figure 23)

The clamping zone is the datum target, its outside diameter shall be:

Copyright International Organization for Standardization
Provided by IHS under license with ISO
No reproduction or networking permitted without license from IHS
Not for Resale

D_6 = 76,45 mm min.

12.4.5 Inside diameter of the clamping zone (see figure 23)

The inside diameter of the clamping zone shall be:

D_7 = 66,09 mm max.

12.4.6 Inner diameter of the optical disk (see figures 24A and 24B)

The inner diameter of the optical disk shall be:

D_8 = 63,540 mm ± 0,076 mm

12.4.7 Optical disk inner diameter roundness (see figures 24A and 24B)

The inside diameter roundness shall be:

D_9 = 102 µm

12.4.8 Location of the recording surface (see figures 24A and 24B)

a) The location of the recording surface from datum A for the optical disk with 90 µm thick protective layer shall be:

L_{77} = 6 µm max.

b) The location of the recording surface from datum A for the optical disk with 1,2 mm thick protective layer shall be:

L_{77} = 1,230 mm ± 0,025 mm

12.4.9 Thickness of the clamping zone (see figures 24A and 24B)

a) The thickness of the clamping zone for the optical disk with 90 µm thick protective layer is determined by the substrate thickness and shall be:

L_{78} = 1,905 mm ± 0,025 mm

b) The thickness of the clamping zone for the optical disk with 1,2 mm thick protective layer is determined by the thickness of the two glass substrates, adhesive and coated layers or an integral hub and shall be:

L_{78} = 2,40 mm to 3,20 mm

12.4.10 Inner diameter of the chamfer (see figures 24A and 24B)

The inner diameter edges shall be uniformly chamfered or rounded off and a sufficient bore height shall remain to withstand the centring process.

a) The inner diameter chamfer for the optical disk with 90 µm thick protective layer or the 1,2 mm thick protective layer disk with integral hub shall be:

L_{79} = 1,02 mm ± 0,38 mm

b) The inner diameter chamfer for the optical disk with 1,2 mm thick protective layer and sandwich construction shall be:

L_{79} = 0,20 mm max.

12.4.11 Inner diameter chamfer angle (see figures 24A and 24B)

a) The inner diameter chamfer angle for the optical disk with 90 µm thick protective layer or the 1,2 mm thick protective layer disk with integral hub shall be:

A_6 = 15° ± 2°

Copyright International Organization for Standardization
Provided by IHS under license with ISO
No reproduction or networking permitted without license from IHS
Not for Resale

b) The inner diameter chamfer angle for the optical disk with 1,2 mm thick protective layer and sandwich construction shall be:

$A_6 = 45° \pm 2°$

12.4.12 Outer diameter of the chamfer (see figures 24A and 24B)

The outer diameter edges should be uniformly chamfered or rounded off to avoid excessive wear to the carrier interface areas in contact with the optical disk.

a) The outer diameter chamfer for the optical disk with 90 µm thick protective layer shall be:

$L_{80} = 0{,}51$ mm $\pm$ 0,07 mm

b) The outer diameter chamfer for the optical disk with 1,2 mm thick protective layer shall be:

$L_{80} = 0{,}20$ mm max.

12.4.13 Chamfer angle of the outer diameter (see figures 24A and 24B)

The chamfer angle of the outer diameter for either protective layer optical disk shall be:

$A_7 = 45° \pm 2°$

12.4.14 Dimensional characteristics of the protective layers

12.4.14.1 90 µm thick protective layer optical disk (see figure 24A)

a) Under the operating conditions of 8.2 and the operating speeds in 17.2.7, the range of distances from the recording layer to the designated surface of the coversheet shall be as follows:

The distance from the recording surface to the interior of the 90 µm thick protective layer shall be:

$L_{81} = 250$ µm min.

The distance from the recording surface to the exterior of the 90 µm thick protective layer shall be:

$L_{82} = 938$ µm max.

b) The 90 µm thick protective layer relief shall be:

$L_{83} = 1{,}78$ mm $\pm$ 0,53 mm

c) The 90 µm thick protective layer static location with respect to the recording surface at the outer diameter of the optical disk is determined by the perimeter ring and shall be:

$L_{84} = 0{,}483$ mm $\pm$ 0,025 mm

12.4.14.2 1,2 mm thick protective layer optical disk (see figure 24B)

a) The substrate functions as the protective layer and the thickness shall be consistent with 15.3.2.

b) The positional tolerance of Side A and Side B axis of rotation to a common datum axis of rotation shall be 10 µm.

12.5 Mass

The mass of the optical disk shall not exceed 615 g.

12.6 Moment of inertia

The moment of inertia of the optical disk shall not exceed 10,0 $g \cdot m^2$.

Copyright International Organization for Standardization
Provided by IHS under license with ISO
No reproduction or networking permitted without license from IHS
Not for Resale

12.7 Imbalance

The optical disk imbalance, measured according to annex D, relative to a secondary fixture axis, which is the centreline of the optical disk inside diameter perpendicular to datum A shall not exceed 0,1 g.m.

12.8 Apparent axial runout (see figure 25)

The optical deviation of the recording surface from the plane defined by datum surface A and measured according to annex E shall be:

L_{85} = 150 µm max.

The optical deviation of the recording surface of any optical disk shall be:

L_{85} = 150 µm max.

12.9 Residual focus error

The residual focus error of the optical disk shall not exceed 0,25 µm, zero to peak. The residual focus error shall be measured according to annex F.

13 Handling requirements

13.1 Drop test

The optical disk cartridge shall withstand dropping on each surface and on each corner from a height of 760 mm onto a concrete floor covered with a 2 mm thick vinyl layer without loss of data integrity. Measurement shall be according to annex G.

13.2 Dead weight strength

The caddy shall support a load of 132,3 N maximum, applied at any point. Measurement shall be according to annex H.

13.3 Exposure to ambient light

The exposure time of an optical disk to a fluorescent illumination of 860 lux at the plane of the disk shall be less than 4500 accumulated hours over the useful life of the optical disk.

14 Interface between disk and drive

14.1 Clamping technique

A mechanical clamping technique shall be used.

14.2 Radial positioning

Radial positioning of the optical disk on the disk drive spindle shall be provided by the centring of the axle of the spindle in the centre hole of the optical disk. The centre hole of the optical disk may be either a hole in the substrates or the hole in a metal hub which is an integral part of the optical disk.

14.3 Reference surface

The reference surface for the optical disk shall be provided by the rotating reference surface of the disk drive spindle. The spindle reference surface shall support the optical disk in the specified clamp zone and determines the relative axial position of the optical disk in the disk drive relative to the optical head.

The location of the recording surface is specified in 12.4.8.

Copyright International Organization for Standardization
Provided by IHS under license with ISO
No reproduction or networking permitted without license from IHS
Not for Resale

14.4 Clamping force

The clamping force F_5 applied after centring shall not exceed 125 N.

Copyright International Organization for Standardization
Provided by IHS under license with ISO
No reproduction or networking permitted without license from IHS
Not for Resale

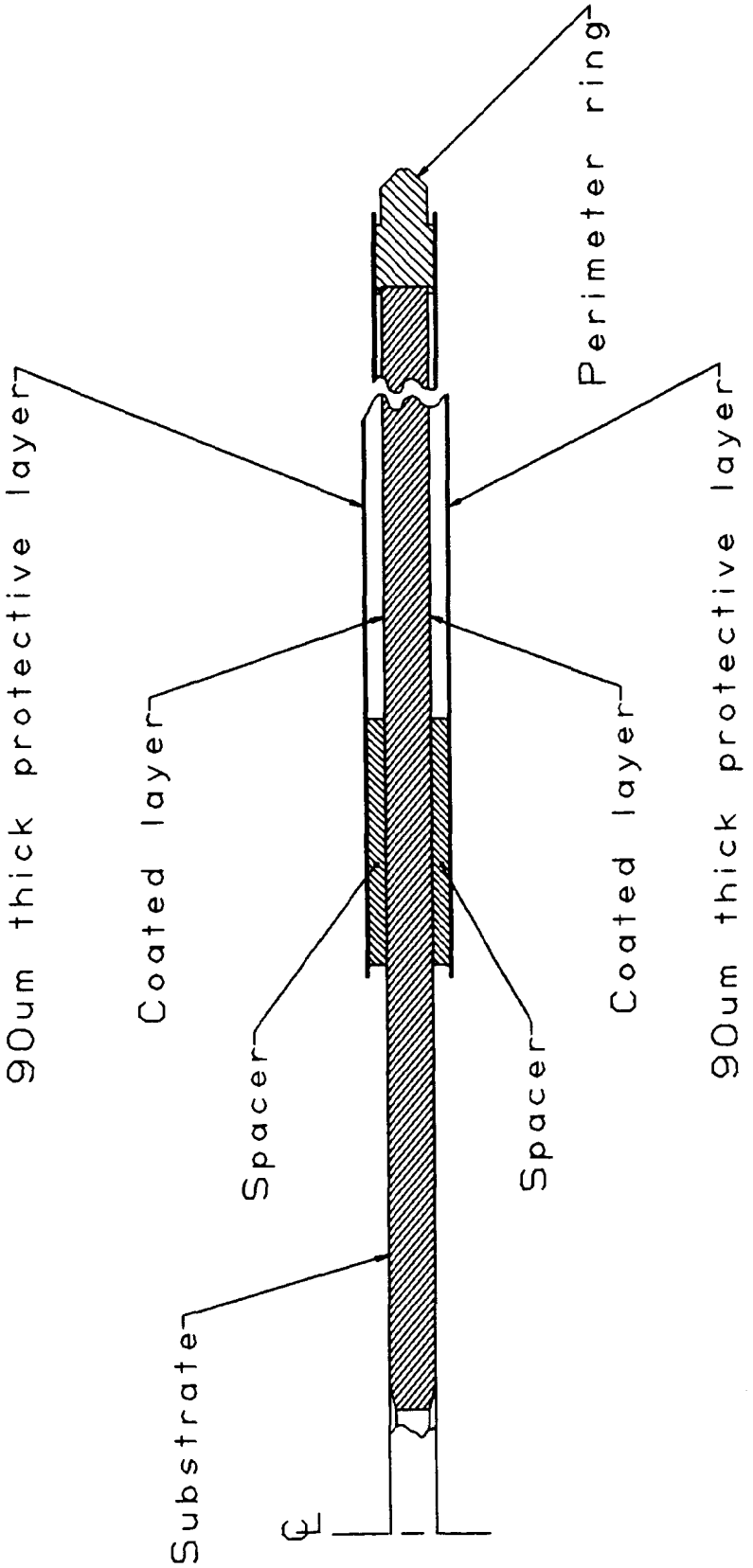

Figure 22A - Typical 90 μm thick protective layer optical disk main elements

Not for Resale
Copyright International Organization for Standardization
Provided by IHS under license with ISO
No reproduction or networking permitted without license from IHS

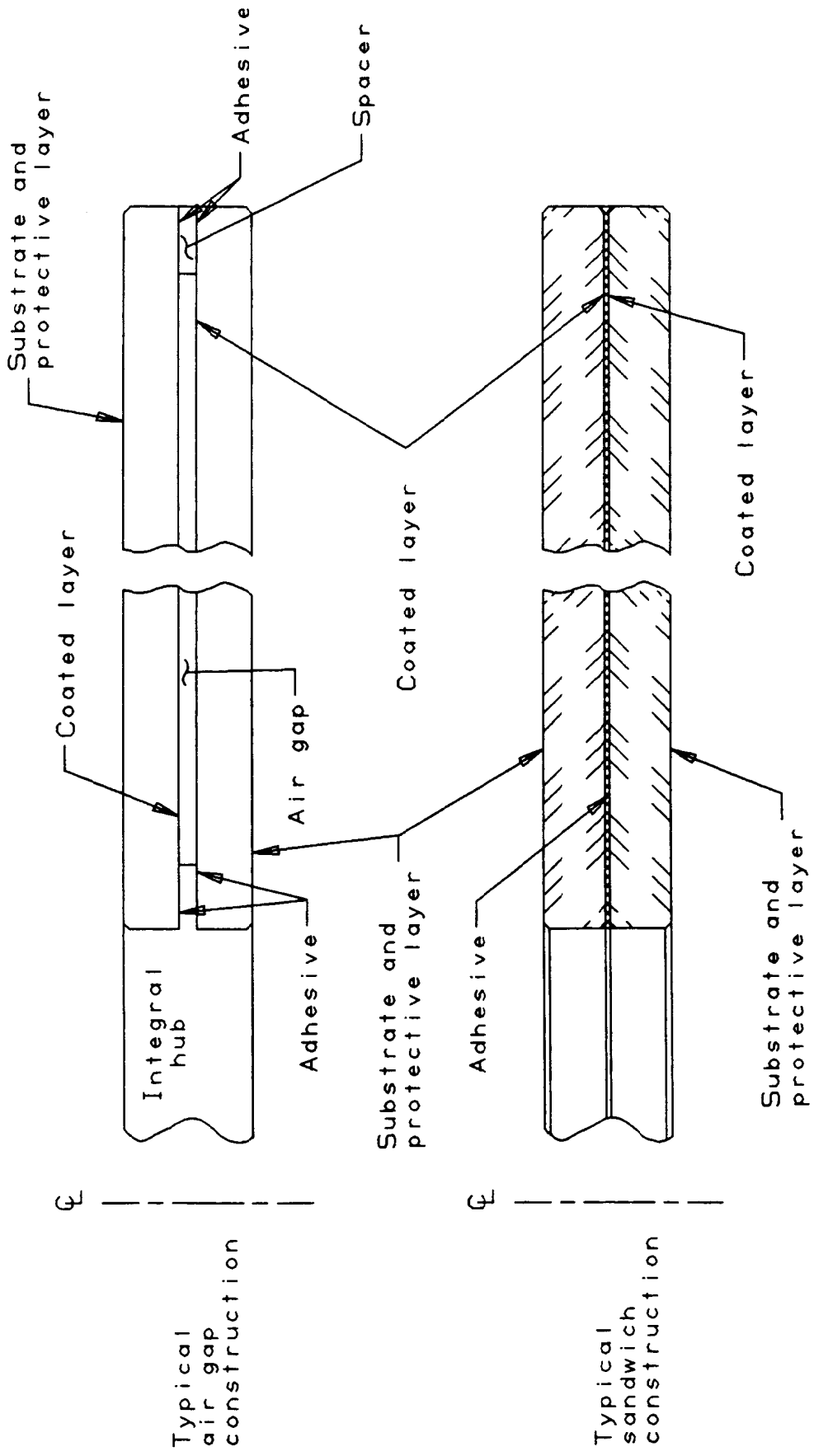

Figure 22B - Typical 1,2 mm thick protective layer optical disk main element

Not for Resale
Copyright International Organization for Standardization
Provided by IHS under license with ISO
No reproduction or networking permitted without license from IHS

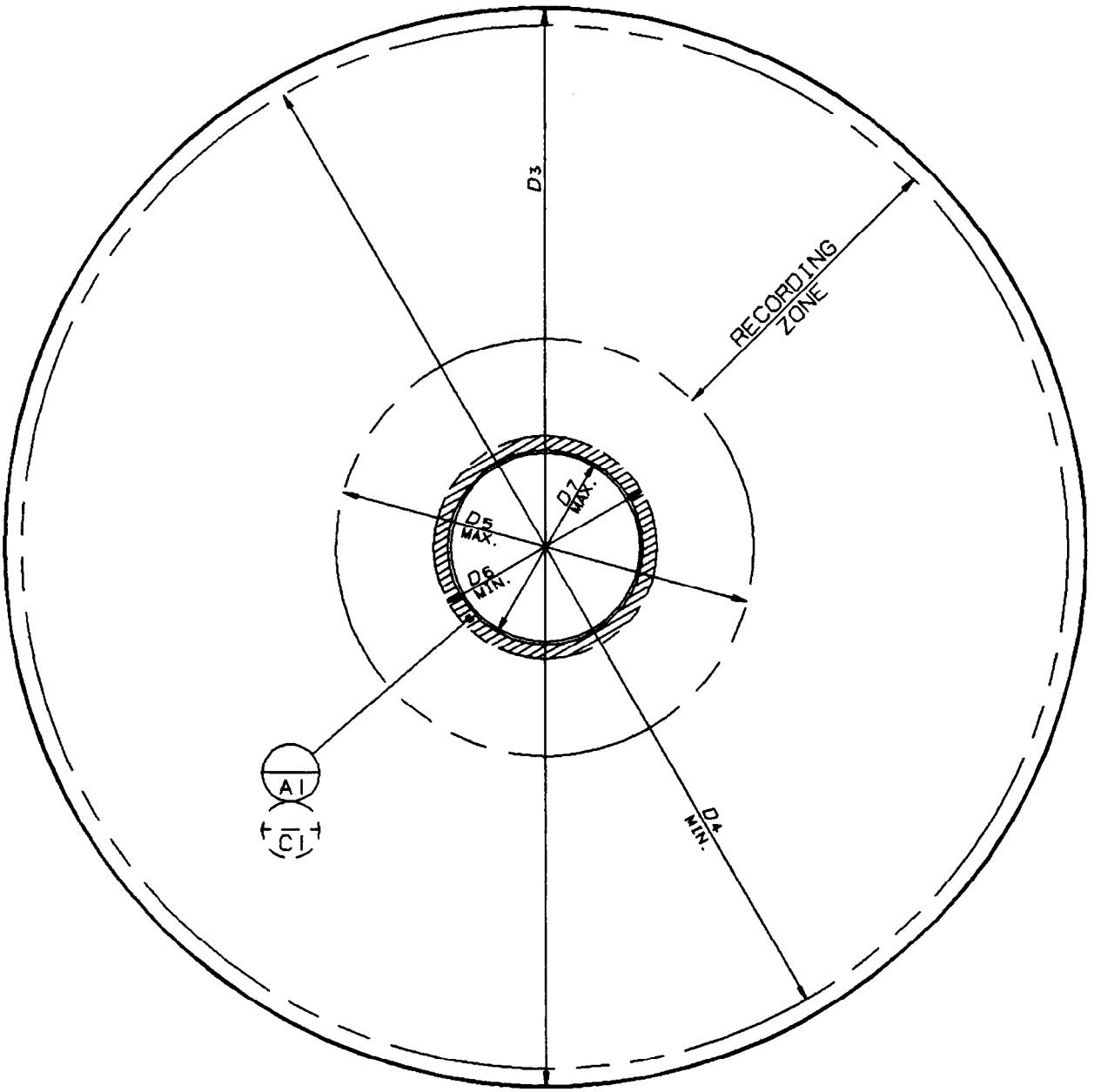

Figure 23 - Outside diameter, clamping and recording zones

Copyright International Organization for Standardization
Provided by IHS under license with ISO
No reproduction or networking permitted without license from IHS
Not for Resale

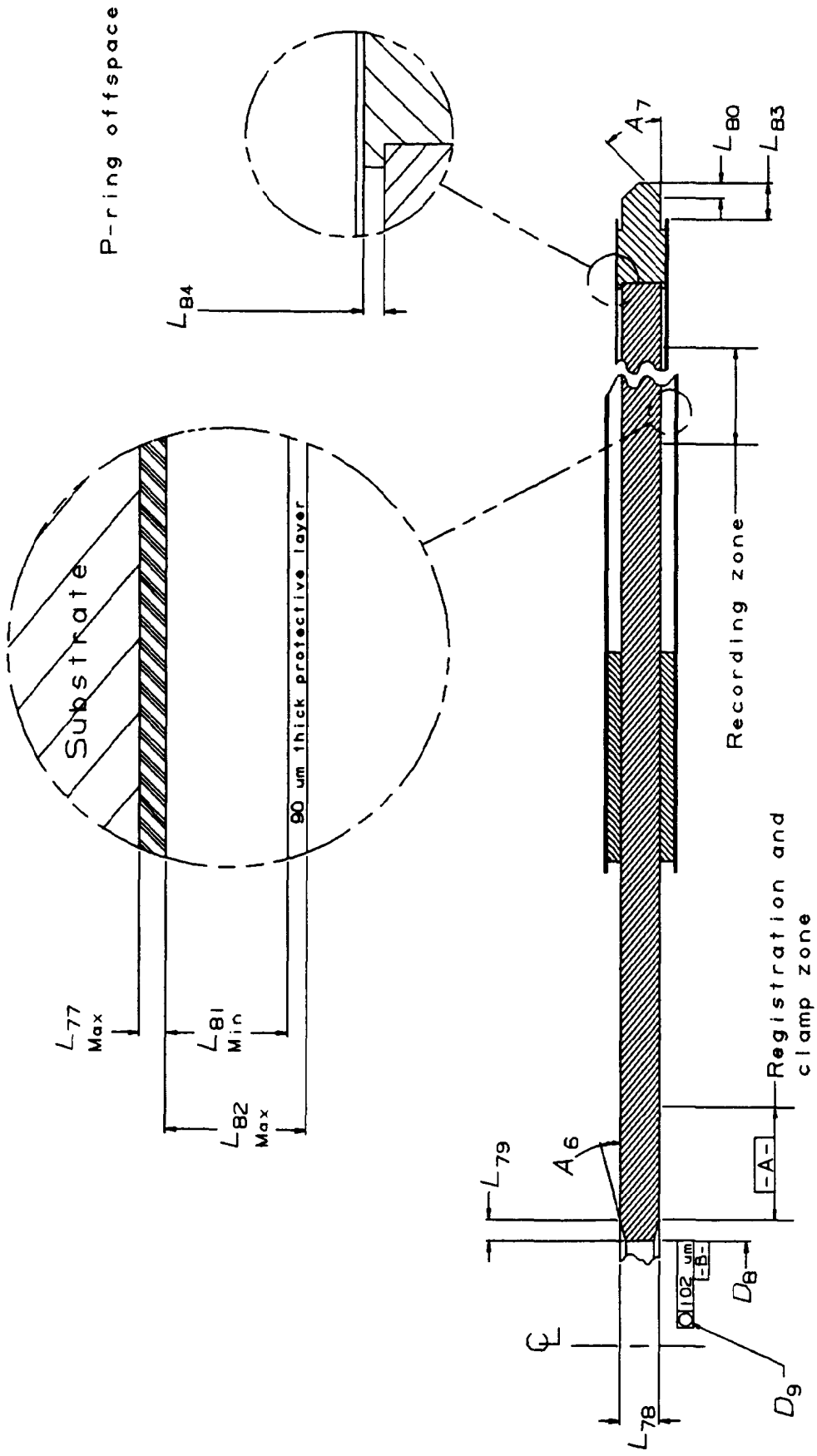

Figure 24A - 90 µm thick protective layer optical disk characteristics

Not for Resale
Copyright International Organization for Standardization
Provided by IHS under license with ISO
No reproduction or networking permitted without license from IHS

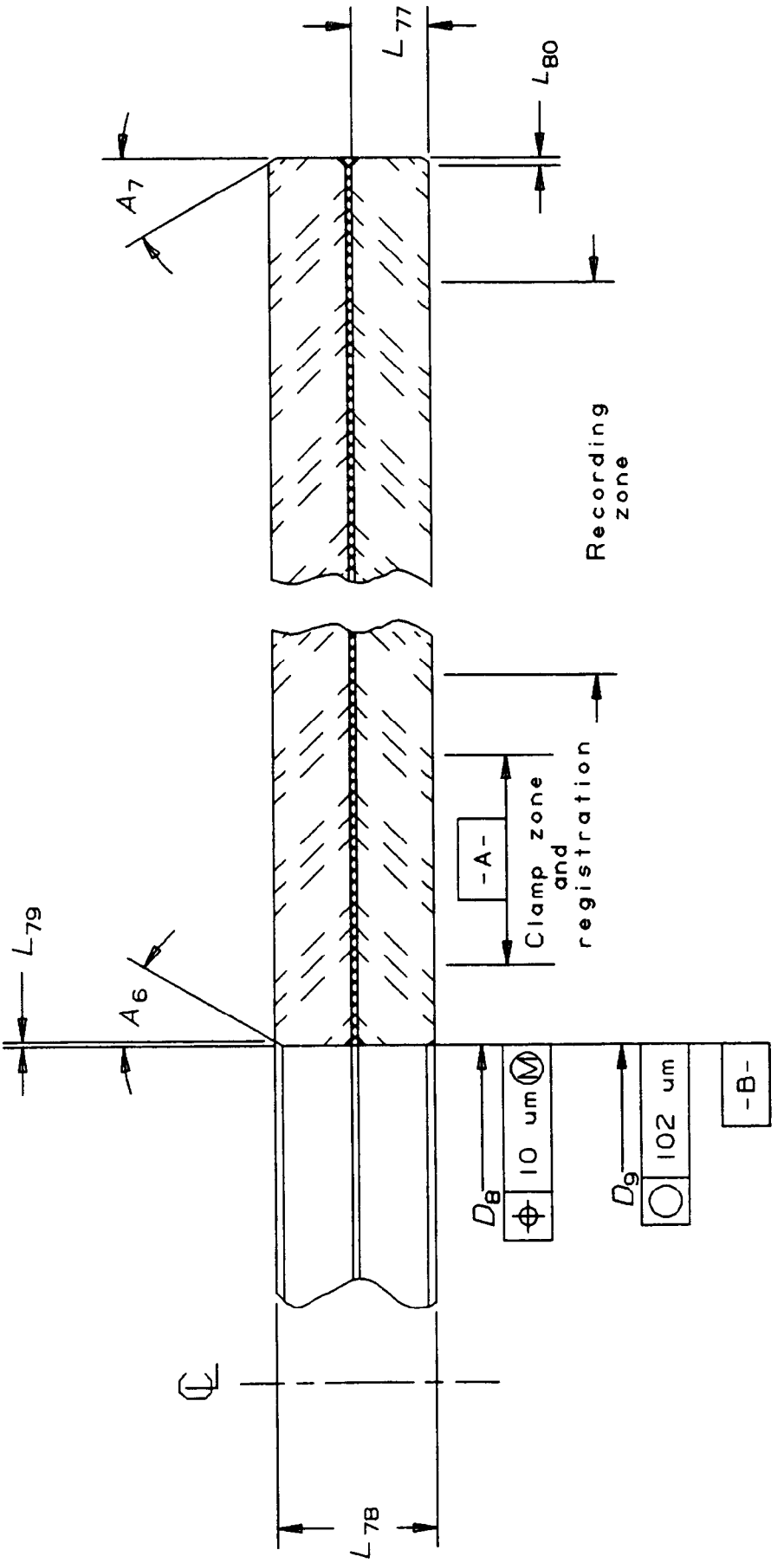

Figure 24B - 1,2 mm thick protective layer optical disk characteristics

Copyright International Organization for Standardization
Provided by IHS under license with ISO
No reproduction or networking permitted without license from IHS
Not for Resale

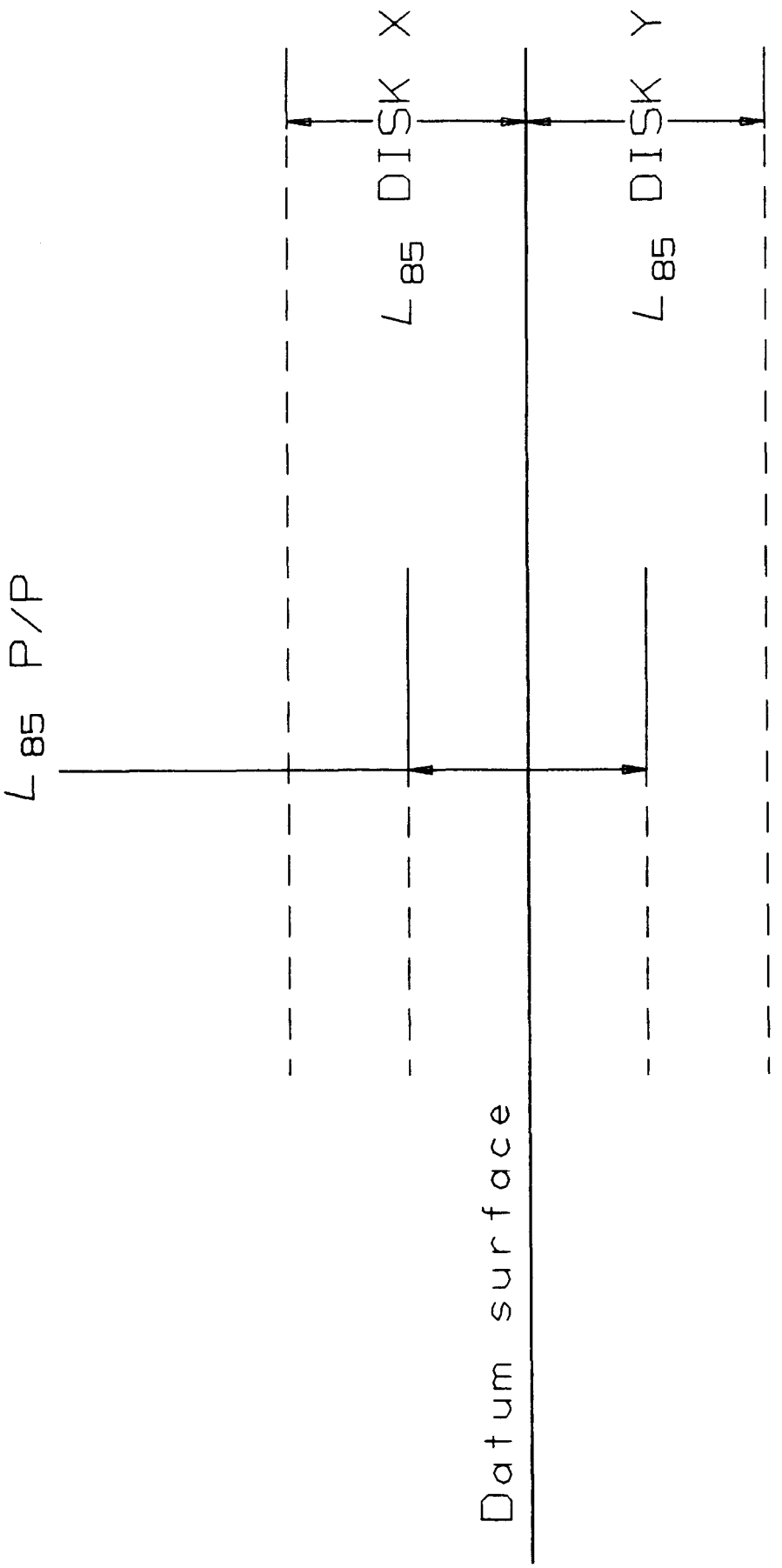

Figure 25 - Maximum axial apparent runout

Copyright International Organization for Standardization
Provided by IHS under license with ISO
No reproduction or networking permitted without license from IHS
Not for Resale

15 Characteristics of the protective layer

15.1 General

The optical path length and plane of focus differs for the 90 μm and 1,2 mm protective layer optical disks. Disk drives should provide a means to accommodate optical disks featuring either protective layer construction.

15.2 Characteristics of a 90 μm thick protective layer

15.2.1 Index of refraction

The index of refraction shall be 1,55 ± 0,05.

15.2.2 Thickness

The physical thickness of the coversheet shall be 90 μm ± 10 μm.

15.2.3 Optical characteristics

a) Optical transmittance shall be greater than 89 %

b) Reflectivity shall not exceed 10 %

c) Double-pass retardation measured according to annex J shall be less than 83 nm.

15.2.4 Tilt

The tilt shall be less than 4 mrad.

15.3 Characteristics of a 1,2 mm thick protective layer

15.3.1 Index of refraction

The index of refraction shall be 1,54 ± 0,06.

15.3.2 Thickness

a) The thickness of the protective layer (in mm) is a function of the index of refraction n according to the following equation:

$$d(n) = 0{,}5079 \frac{(n^3)}{(n^2-1)} \frac{(n^2 + 0{,}2586)}{(n^2 + 0{,}5770)}$$

b) The variation of the physical thickness shall be less than ± 13 μm.

NOTE - In 15.2.2 a tolerance is quoted on an absolute thickness but in 15.3.2 b) the tolerance is quoted on a variation of the physical thickness as determined by 15.3.2 a).

15.3.3 Optical characteristics

a) The optical transmittance shall be greater than 89 %

b) The reflectivity shall not exceed 10 %

c) The double-pass retardation measured according to annex J shall be less than 83 nm.

15.3.4 Tilt

The tilt shall be less than 4 mrad.

16 Characteristics of the recording layer

The read and write characteristics of this clause shall be measured in conformance to the test methods specified in the annexes. The tests to measure conformance to this clause shall be carried out under the conditions of 16.1.1, 16.1.2, and 16.1.3 as appropriate.

Copyright International Organization for Standardization
Provided by IHS under license with ISO
No reproduction or networking permitted without license from IHS
Not for Resale

NOTE - The 90 µm thick protective layer disk has the recording layer coated on the same substrate side as datum reference plane A (see figure 24 A).
The 1,2 mm thick protective layer disk has the recording layer coated on the opposite substrate side from datum reference plane A (see figure 24 B).

16.1 Test conditions

16.1.1 General

a) Environment : Test environment

b) Write and read wavelength : 830 nm ± 5 nm

c) Numerical aperture (NA) : 0,5 ± 0,01

d) Filling of the lens aperture (R/W_x) : 0,8 ± 0,1

e) Beam circularity into objective lens (W_y/W_x) : 1,0 ± 0,1

f) Wavefront at recording layer : $\leq$ 0,045 rms
and coma3 : $\leq$ | 0,10 | rms
and astig3 : $\leq$ | 0,13 | rms
and spher3 : $\leq$ | 0,35 | rms

where:

- 2R is the diameter of the objective lens aperture
- $2W_x$ is the $1/e^2$ diameter of the Gaussian beam in the x dimension of the objective lens pupil coordinates
- $2W_y$ is the $1/e^2$ diameter of the Gaussian beam in the y dimension of the objective lens pupil coordinates
- coma3 = third order coma aberration
- astig3 = third order astigmatism aberration
- spher3 = third order spherical aberration

g) Polarization of the light: circular

h) Detection method:

Reflected light collected by central aperture method

Transitions detected by gated second derivative method

i) The data rate for testing shall be 10 Mbit/s.

16.1.2 Read conditions

Marks on the disk shall be read from the disk with a constant optical power. The read power shall be = 0,8 mW.

Post-emphasis shall be the value specified in the Identification Sector by bytes 93 and 94.

16.1.3 Write conditions

Marks are written on the disk by pulses of optical power superimposed upon the read power. The pulse shape shall be as specified in annex L.

The write power is the optical power incident at the entrance surface when writing in the user area.

The write power is that power at which the amplitude of the first derivative output signal is equal to 90 % of the amplitude of the first derivative output signal from the 2,5 MHz data in the pre-formatted headers. The write power shall be determined according to annex L.

Copyright International Organization for Standardization
Provided by IHS under license with ISO
No reproduction or networking permitted without license from IHS
Not for Resale

The pre-emphasis shall be the value specified in the Identification Sector by bytes 91 and 92.

The direction of rotation shall be counterclockwise for side A and clockwise for side B as seen from the optical head of the disk drive.

The test patterns to be written shall be as specified by the related test method.

16.2 Baseline reflectance

16.2.1 General

The baseline reflectance is the reflectance of the blank area of the optical disk in the recording zone including the protective layer.

The baseline reflectance shall be within 7 % to 55 %.

16.2.2 Actual value

The baseline reflectance shall be measured according to annex K with a 0,5 numerical aperture beam at a wavelength of 830 nm ± 15 nm.

16.2.3 Requirement

The uniformity of baseline reflectance in the recording zone of the optical disk shall be ± 5 % of the actual value.

16.3 Write power requirement

The write power for 14,5 m/s measured according to annex L shall be less than 13,5 mW.

16.4 Read power requirement

The read power measured according to annex M at the entrance surface of the optical disk shall not exceed 0,8 mW or the value specified in byte 88 of the Identification Sector.

16.5 Prerecorded marks

The characteristics of the prewritten information are given in 18.1.6.

16.6 Data written in user area

16.6.1 Reflectivity characteristics of written marks

The written marks shall have higher reflectivity than the not written areas of the record zone.

16.6.2 Signals

The 356 mm optical disk employs delay modulation mark (DM-M) encoding or pulse length encoding. Reflected light signals from recorded areas are detected by the central aperture method and time interval boundaries are determined by the gated second derivative method. (See annex M). Thus, the absolute value of the peak of the first derivative of the AC read signal obtained from recorded marks is the relevant signal. The dI/dt notation used in 16.6.2 represents the absolute value of the peak of the first derivative of a read signal.

All signals referred to below are currents through the photo diode detector and hence are linearly related to the optical power falling on the detector provided the RF channel is DC coupled up to that state. Measure according to annex K.

I_B is the DC signal obtained from an unrecorded (blank) area of the disk with baseline reflectance R_1.

I_{LO} is the AC signal obtained from marks written at the lowest repetition rate at the outside diameter of the band. The lowest frequency is 2,5 MHz and should be user data pattern (AA).

I_{LI} is the AC signal obtained from marks written at the lowest repetition rate at the inside diameter of the band.

Copyright International Organization for Standardization
Provided by IHS under license with ISO
No reproduction or networking permitted without license from IHS
Not for Resale

I_{HO} is the AC signal obtained from marks written at the highest repetition rate at the outside diameter of the band. The highest frequency is 5 MHz and should be user data pattern (FF).

I_{HI} is the AC signal obtained from marks written at the highest repetition rate at the inside diameter of the band.

The marks associated with I_{LO}, I_{LI}, I_{HO} and I_{HI} shall be written under the conditions given in 16.1.3 and read under the conditions given in 16.1.2.

16.6.2.1 dRS_N/dt

The recorded marks produce a reflectivity change during read which is transformed into a change in AC read signals. Optical disk reflectance signal normalization to a 100 % reflector (RS_N) shall be defined as the ratio of the AC signal at the output of the read cell when reading data to the DC signal measured at the read cell with the optical disk replaced by a 100 % reflector.

dRS_N/dt shall be $\geq$ 0,05 % per ns.

16.6.2.2 Signal ramp

The disk drive should decrease the write power from the outside diameter to the inside diameter of the band as a linear function of these diameters:

$dI_{LI} / dI_{LO} \geq 0{,}65$

16.6.2.3 Symmetry

The absolute value of the peak of the first derivative of the read signal obtained from the rising edge of the low frequency user data pattern (AA) is dI_{LR} / dt. The absolute value of the peak of the first derivative of the read signal obtained from the falling edge of the low frequency user data pattern is dI_{LF} / dt. The ratio of the rising edge signal to the falling edge signal is symmetry.

The symmetry shall be within 0,65 to 1,20.

16.6.2.4 Resolution

Resolution is the ratio of the signal from marks written at high frequency to the signal from marks written at low frequency. The resolution at both the outside and inside diameters of each band shall be:

dI_H / dI_L = 0,8 to 1,2

16.6.3 Narrow-band signal-to-noise ratio

The narrow-band signal-to-noise ratio measured according to annex N shall be greater than 55 dB for all tracks in the user zone.

16.6.4 Cross-talk

The track-to-track cross-talk when measured according to annex P at a track pitch of 1,6 µm shall be less than -22 dB.

17 Characteristics of the data organization on the disk

17.1 General description

The 356 mm optical disk is two-sided. The recording area on each side is partitioned into five bands. The format of the optical disk is constant angular velocity within each band.

Copyright International Organization for Standardization
Provided by IHS under license with ISO
No reproduction or networking permitted without license from IHS
Not for Resale

17.2 Band organization

Each side shall have a pre-formatted format organized as five bands as specified below (see figure 26).

17.2.1 Recordable area in each band

The recordable area within each of the five bands shall be per the radii specified in table 1. Positional tolerance shall be ± 0,009 mm.

Table 1 - Recordable area radii

Radii, mm	Band 0	Band 1	Band 2	Band 3	Band 4
Outer radius	174,991	145,751	121,686	101,061	84,101
Inner radius	145,760	121,695	101,070	84,110	70,130

17.2.2 Track shape in each band

The pre-formatted and user-recorded data within each band on both Side A and Side B shall be organized into a spiral with radius decreasing by the track pitch per revolution. The tracks shall spiral inward when the disk rotates as viewed by the objective lens.

17.2.3 Direction of rotation for each side

The optical disk is designed to allow for use in a drive with optical access from both sides simultaneously. Use with a drive with optical access from only one side requires the disk to be rotated in opposite directions for Side A versus Side B.

Side A of the optical disk shall rotate in the counterclockwise direction as seen from the optical head of the disk drive.

Side B of the optical disk shall rotate in the clockwise direction as seen from the optical head of the disk drive.

17.2.4 Track pitch

The radius of the spiral track shall decrease either by 1,8 µm ± 0,2 µm per revolution or by the values specified in bytes 103 and 104 of the identification sector.

17.2.5 Radial eccentricity of pre-formatted information

All requirements shall apply when the optical disk is mounted on the support spindle (see annex C). The optical disk rotation rates shall be as specified in 17.2.7. Radial eccentricity does not include disk drive induced centring errors.

Pre-formatted information shall be concentric relative to datum B of the optical disk within ± 10 µm (see figure 27).

The distance between any two non-adjacent tracks on a side, shall be as specified in 17.2.4 with a maximum cumulative error less than ± 2 µm.

Any spiral track shall be concentric with any other spiral track on the same side within ± 2 µm (see figure 27).

The deviation of the pre-formatted tracking pads and headers from the desired spiral shape shall be less than 0,07 µm with disk drive decentre removed (see figure 28).

Copyright International Organization for Standardization
Provided by IHS under license with ISO
No reproduction or networking permitted without license from IHS
Not for Resale

The residual tracking error signal shall be measured as specified in annex R and shall not exceed 0,1 μm.

17.2.6 Band numbers

The five bands on each side are numbered 0, 1, 2, 3, and 4 with band 0 at the outer and band 4 at the inner radii of the recordable area (see figure 26).

17.2.7 Pre-formatted information in-track bit spacing

The in-track bit length of the pre-formatted information is specified to achieve constant angular velocity recording in each band. The spacing is calculated from the rpm values recorded in table 2 for a data transfer rate of 10 megabits per second (see 16.1.1 i)) and a minimum in-track bit length of 1,2 μm.

Table 2 - Example of rotational velocities in each band (in rpm)

Band 0	Band 1	Band 2	Band 3	Band 4
786	942	1 134	1 362	1 632

17.2.8 Rotational velocity

The spacing and location of the pre-formatted and user recorded data shall be consistent with the optical disk rotational velocities specified for each band in bytes 78 to 86 of the Identification Sector.

The average rotational velocity shall be ± 0,1 % of nominal rotational velocity.

The peak-to-peak velocity variation shall be less than 0,05 %.

17.2.9 Number of sectors in each band

The number of sectors in each band is depending on the track pitch. The Identification Sector specifies the actual addresses of the sectors in each band. Table 3 shows, as an example for a track pitch of 1,8 μm , the absolute address number in decimal notation for the first sector in each band, and the number of sectors that are formatted in each band. The Identification Sector and the Bad Sector Map Sectors shall always be recorded at the addresses specified in table 4.

Copyright International Organization for Standardization
Provided by IHS under license with ISO
No reproduction or networking permitted without license from IHS
Not for Resale

Table 3 - Number of sectors in each band

	Band 0	Band 1	Band 2	Band 3	Band 4
Start address	1	268 435 456	536 870 912	805 306 368	1 073 741 824
Number of sectors formatted	1 230 846	845 354	601 754	411 816	283 362

17.3 Formatted zones

17.3.1 Organization of the sectors in each band

Each band includes manufacturing test sectors, Identification Sector, sectors with a map of the bad sectors, usable sectors, and leader and trailer sectors. The organization of each band is the same, except that the outer and inner radii, rotational velocity, sector addresses, and quantity of sectors vary as shown in table 4.

The sector organization of each band is shown in figure 29.

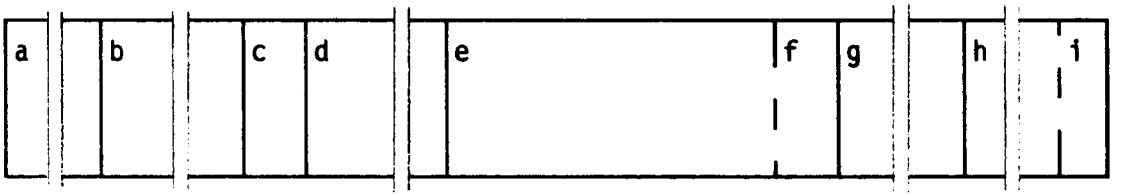

a = Lead-in tracking sectors. See 18.2

b = Manufacturing test sectors. See 18.2

c = Identification Sector. See 18.3

d = Sectors for the Bad Sector Map. See 18.4

e = Minimum number of usable sectors. See 18.8 and figure 30)

f = Allowance for maximum number of bad sectors. See 18.9.1

g = Inside diameter test sectors

h = Spin-out tracking sectors. See 18.9.3

i = Last spin out tracking (trailer) sector.

Figure 29 - Organization of the sectors in each band

Copyright International Organization for Standardization
Provided by IHS under license with ISO
No reproduction or networking permitted without license from IHS
Not for Resale

Table 4 - Allocation of sectors

Sectors	Band 0	Band 1	Band 2	Band 3	Band 4
Lead-in:					
address	1	268 435 456	536 870 912	805 306 368	1 073 741 824
quantity	76	64	53	44	37
OD test:					
address	77	268 435 520	536 870 965	805 306 412	1 073 741 861
quantity	302	315	326	335	342
IDENT:					
address	379	268 435 835	536 871 291	805 306 747	1 073 742 203
quantity	1	1	1	1	1
BSM:					
address	380	268 435 836	536 871 292	805 306 748	1 073 742 204
quantity	48	48	48	48	48
Usable:					
address	428	268 435 884	536 871 340	805 306 796	1 073 742 252
minimum quantity	1 227 000	842 907	599 797	410 244	281 763
allowable Bad:					
address	1 223 986	269 276 352	537 469 363	805 715 781	1 074 023 108
quantity	6 405	4 074	2 985	2 139	1 856
ID test:					
address	1 230 391	269 280 426	537 472 348	805 717 920	1 074 024 964
quantity	380	320	265	220	185
Spin out:					
address	1 230 771	269 280 746	537 472 613	805 718 140	1 074 025 149
quantity	76	64	53	44	37
The Identification Sector (see table 7) specifies the actual address information for each optical disk.					

17.3.2 Organization of the usable sectors

The usable sectors include drive and supplemental user data, write power calibration, automatic rewrite, and user data sectors. The usable sectors have the same organization in each band, except for the addresses and quantities as specified in table 5.

The organization of the usable sectors is shown in figure 30.

Copyright International Organization for Standardization
Provided by IHS under license with ISO
No reproduction or networking permitted without license from IHS
Not for Resale

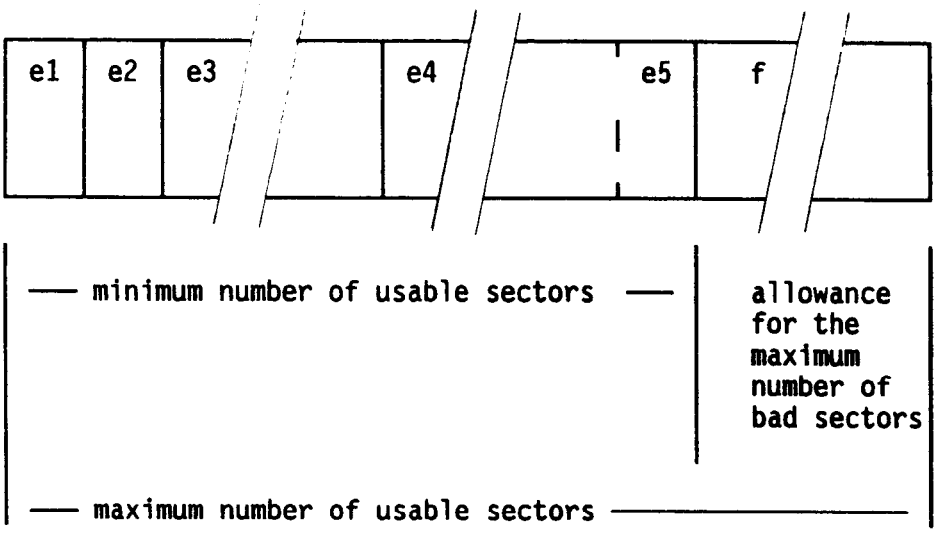

e1 = One sector for drive supplemental data. See 18.5

e2 = One sector for user configuration data. See 18.6

e3 = Write power calibration and auto-rewrite sectors. See 18.7

e4 = User sectors. See 18.8

e5 = Last user sector

f = Allowance for the maximum number of bad sectors. See 18.9.1

Figure 30 - Organization of the usable sectors

Copyright International Organization for Standardization
Provided by IHS under license with ISO
No reproduction or networking permitted without license from IHS
Not for Resale

Table 5 - Usable sectors

Sectors	Band 0	Band 1	Band 2	Band 3	Band 4
Drive supplemental data:					
address	428	268 435 884	536 871 340	805 306 796	1 073 742 252
quantity	1	1	1	1	1
User supplemental data:					
address	429	268 435 885	536 871 341	805 306 797	1 073 742 253
quantity	1	1	1	1	1
Write power calibration:					
address	430	268 435 886	536 871 342	805 306 798	1 073 742 254
quantity	2 436	1 800	1 068	816	576
Auto-rewrite:					
address	2 866	268 437 686	536 872 410	805 307 614	1 073 742 830
quantity	8 698	5 931	4 156	2 791	1 873
User data:					
address	11 564	268 443 617	536 876 566	805 310 405	1 073 744 703
quantity	1 212 422	832 735	592 797	405 376	278 405
Allowance for max no. bad:					
address	1 223 986	269 276 352	537 469 363	805 715 781	1 074 023 108
quantity	6 405	4 074	2 985	2 139	1 856

The Identification Sector (see table 7) specifies the actual address information for each optical disk.

The total number of user data sectors (see table 5) is 3 321 735. The size of a user data sector is 1 024 bytes. Thus the user data capacity is 3,401 gigabytes per side or 6,802 gigabytes per optical disk for a track pitch of 1,8 μm.

17.3.3 User sector organization

The user sectors have the same organization in each band with pre-formatted tracking pads dispersed throughout the user sector. A user sector comprises 1 260 bytes of which 1 024 are for user data (see figure 31). Its format is described in table 6.

Copyright International Organization for Standardization
Provided by IHS under license with ISO
No reproduction or networking permitted without license from IHS
Not for Resale

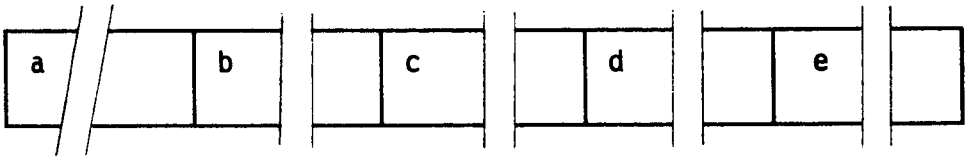

a = Pre-formatted user sector header. See 18.8.1

b = Pre-written user data field preamble including one tracking pad. See 18.8.2

c = User data field including 18 tracking pads. See 18.8.4

d = EDAC including one tracking pad. See 18.8.5

e = Interface sector gap. See 18.8.6

Figure 31 - User sector organization

17.4 Requirements for interchange

An interchanged optical disk cartridge according to this International Standard shall satisfy the following requirements.

17.4.1 Requirements for reading

The data recorded on the disk shall be readable under the read conditions specified in 16.1.2.

17.4.2 Requirements for writing

Data shall be recorded under the write conditions specified in 16.1.3.

18 Format

The format is based upon a sample servo tracking method.

18.1 Track layout

Pre-formatted data and disk drive recorded pre-written and user data are all recorded on a common spiral track centreline.

18.1.1 Tracking

The format is characterized by sampled servo tracking. The pre- formatted information is preformed or pre-recorded on the disk by the manufacturer and includes tracking pads. The tracking servo uses the signals from the tracking pads to perform the tracking function.

18.1.2 Tracking pads

Each user sector contains 20 tracking pads (see table 6).

A tracking pad consists of a 3-byte pattern of one unrecorded byte followed by a 1-byte long mark or groove, followed by one unrecorded byte.

The tracking pads shall be aligned so that the leading edge of the mark or groove is an integer multiple of 60 bytes from the leading edge of the first bit cell for Address Mark 0. Figure 32 shows the location of tracking pads in each user sector.

Copyright International Organization for Standardization
Provided by IHS under license with ISO
No reproduction or networking permitted without license from IHS
Not for Resale

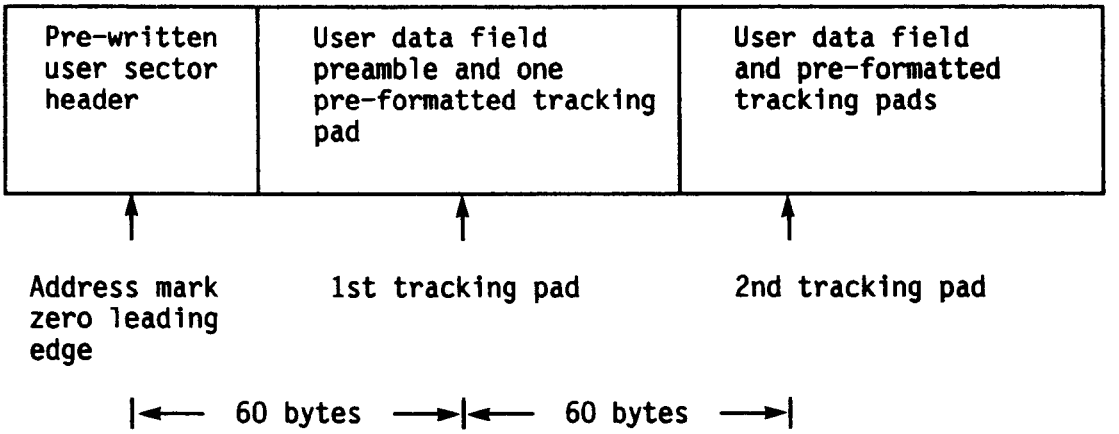

Figure 32 - User sector with tracking pads

18.1.3 Tracking pad tolerances

The distance from the last data edge before a tracking pad mark or groove to the first data edge after a tracking pad mark shall be 3 bytes ± 1/8 bit.

The distance from the end of the user data marked area before a tracking pad to the leading edge of a tracking pad mark or groove shall be 1 byte ± 5 bits.

The length of the tracking pad mark or groove shall be 1 byte ± 1/2 bit.

18.1.4 Tracking push-pull ratio

The push-pull ratio $(I_1 - I_2) / I_B$ shall be between 0,035 and 0,28.

$(I_1 - I_2)$ is the absolute value of the peak amplitude of the differential output of the split photodiode detector when the beam crosses tracking pads. I_B is the signal obtained from an unrecorded blank area of the recording surface.

18.1.5 Focus

Focus can be obtained by any method.

18.1.6 Recorded characteristics

The pre-formatted information shall be recorded the same as for data written in the user area. The read characteristics shall be the same as for data in the user area.

18.2 Leader and manufacturing test sectors

The leader and manufacturing test sectors of the spiral track in each band shall be in conformance to the radial eccentricity requirements of 17.2.5.

The manufacturing test sectors of each band are provided for use by the optical disk manufacturer.

18.3 Disk Identification Sector

One sector per band contains the unique identifier for the optical disk and an identifier indicating the Side A and Side B of the two sided optical disk (see figure 29).

The Identification Sector comprises of a header and band records.

The format of the 128-byte long header shall be as shown in table 7.

Copyright International Organization for Standardization
Provided by IHS under license with ISO
No reproduction or networking permitted without license from IHS
Not for Resale

The format of the 640-byte long band records shall be as shown in table 7.

18.4 Sectors of the bad sector map

The manufacturer of the optical disk should scan the entire surface of the optical disk and determine any unusable (bad) sectors at time of manufacture. The sectors of the Bad Sector Map provide a location for the optical disk manufacturer to record such information for use by the disk drive (see figure 29).

The format and structure of the Bad Sector Map shall be as defined in tables 8 and 9.

The maximum number of bad (unusable) sectors in the recording zone shall not exceed the limits specified in table 5.

18.5 Disk drive supplemental data

The usable sectors in each band include one sector that is provided for use by the disk drive to record any supplemental data desired (see figure 30). This sector shall be contiguous to the Bad Sector Map Sectors. For this International Standard, the contents of this sector shall be ignored in interchange.

18.6 User supplemental data

The usable sectors in each band include one sector that is provided to record user configuration or usage of an optical disk to provide information to the disk drive software as may be necessary (see figure 30). This sector shall be contiguous to the disk drive supplemental data sector. For this International Standard, the contents of this sector shall be ignored in interchange.

18.7 Write power calibration and auto-rewrite sectors

The usable sectors in each band include reserved sectors for automatic rewrite and write power calibration (see figure 30).

Reserved sectors are provided to enable automatic rewrite of user data which is detected by the disk drive to be marginal with respect to data integrity (see table 5).

Reserved sectors are provided for use by the disk drive for write power calibration (see table 5).

18.8 User sector format

The user sector format is summarized in tabular form in table 6.

18.8.1 User sector header

18.8.1.1 VFO sync

A fixed pattern, 19 bytes in length, that allows the variable frequency oscillator (VFO) of the channel decoder to synchronize to the incoming bit stream. The field will consist of bytes set to (FF).

18.8.1.2 Phase sync

A fixed pattern, 4 bytes in length, used by the decoder to resolve the phase ambiguity of the DM-M code. The field shall consist of bytes set to (AA).

18.8.1.3 VFO sync

One byte set to (FF).

18.8.1.4 Address Mark 0

A fixed pattern, 1 byte in length, used by the decoder to identify the byte boundaries for the sector header. See figure 33 which defines the address marks.

Copyright International Organization for Standardization
Provided by IHS under license with ISO
No reproduction or networking permitted without license from IHS
Not for Resale

18.8.1.5 VFO sync

One byte set to (FF).

18.8.1.6 Sector address

A four-byte field that contains the sector address. The sectors are numbered sequentially from the outside of the disk (see tables 4 and 5). Sector number 0 is the first sector in the five tracks preceding the first user available sector in Band 0.

18.8.1.7 CRC field

A two-byte field that contains a two-byte cyclic redundancy check, CRC-16, on the reserved byte and the address field.

18.8.2 User data field preamble and pre-formatted tracking pad

The pre-written user data field preamble is 59 bytes long.

18.8.2.1 Gap

A gap, 1 byte in length, is a blank area between the user sector header and the pre-written data field preamble.

18.8.2.2 VFO sync

The field shall consist of 20 bytes set to (FF).

18.8.2.3 Phase sync

The field shall consist of 4 bytes set to (AA). This phase sync pattern is repeated four times in the user data field preamble as listed in table 6.

18.8.2.4 Address Mark 1, 2, 3 and 4

Each address mark 1, 2, 3 and 4 is a unique fixed pattern, 1 byte in length. One each of the four address marks are contained in the user data field preamble per table 5. The address marks 1, 2, 3 and 4 shall be as defined by figure 33.

18.8.2.5 Data control field

The data control field (DCF) is 7 bytes in length as follows:

The DCF in the user data field preamble contains the logical address. The first byte is set to all ZEROs, the next four bytes are the logical address, and the last two bytes are CRC-16.

The DCF in the Identification Sector and in the Bad Sector Map Sectors consists of five bytes set to all ZEROs followed by two bytes CRC-16 calculated on the reserved bytes.

18.8.3 Pre-formatted tracking pads

A tracking pad consists of a 3-byte pattern of one unrecorded byte followed by a 1-byte long mark or groove, followed by 1 unrecorded byte. The locations of tracking pads throughout the user sector format is given in table 6.

The tracking pads shall be aligned so that the leading edge of the mark is an integer multiple of 60 bytes from the leading edge of the first bit cell for the Address Mark 0.

18.8.4 User data field

The user data field shall be 1024 bytes in length.

The user data field shall contain 18 pre-formatted tracking pads dispersed throughout the user data field consistent with 18.8.3 and locations as given in table 6.

Copyright International Organization for Standardization
Provided by IHS under license with ISO
No reproduction or networking permitted without license from IHS
Not for Resale

18.8.5 Error detection and correction (EDAC)

18.8.5.1 EDAC field

The EDAC field is 80 bytes in length containing the error detection and correction information for the user data field (see table 6).

One pre-formatted tracking pad is included in the EDAC field (see table 6).

18.8.5.2 EDAC type

The EDAC code is a long distance Reed-Solomon code, interleaved to depth five, operating on one byte symbols.

The EDAC polynomial shall be as follows:

The algebra used by this code is defined over the Galois field GF (2^8) by α, where α is a root of the primitive binary polynomial:

$$x^8 + x^7 + x^2 + x^1 + 1$$

The finite field elements are given by $\theta^i = \alpha^{2i}$

The generator polynomial has roots θ^i for $120 \leq i \leq 135$. This leads to:

$$G(x) = \prod_{i=120}^{i=135} (x + \theta^i)$$

The coefficients of G(x) are:

(D4) (75) (BB) (B2) (13) (52) (71) (D4) (9B) (D4) (71) (52) (13) (B2) (BB) (75) (D4)

The EDAC interleaving shall be as follows:

The code is interleaved to depth five. This means that each data byte belongs to one of n subcodes, where n = 0 to 4.

Subcode 0 has block length 220 bytes, 204 data bytes.
Subcode 1 has block length 221 bytes, 205 data bytes.
Subcode 2 has block length 221 bytes, 205 data bytes.
Subcode 3 has block length 221 bytes, 205 data bytes.
Subcode 4 has block length 221 bytes, 205 data bytes.

The 80 check bytes follow the 1024 data bytes and are interleaved such that if the data bytes are numbered sequentially B_1 to B_{1024} and the check bytes are B_{1025} to B_{1104}, then the j-th byte in the n-th subcode is given by:

$S_j^n = B_{5j+n}$ j = 0 to 220

Note that $S_{(}^{0}$ has no corresponding data byte.

18.8.6 Interface sector gap

The interface sector gap is a blank area, 8 bytes in length, between the end and the beginning of physically adjacent sectors. It is used to prevent run over from one sector into an adjacent sector.

- One byte interface sector gap
- Seven unrecorded bytes (reserved)

Copyright International Organization for Standardization
Provided by IHS under license with ISO
No reproduction or networking permitted without license from IHS
Not for Resale

18.9 Sectors following the user sectors in each band

18.9.1 Allowance for the maximum number of bad sectors

The number of sectors provided in each band to replace any sectors specified in the Bad Sector Map Sectors (see figure 30 and 18.4).

18.9.2 Inside diameter test sectors

The inside diameter test sectors are for use as a maintenance/calibration test area (see table 7, band record description, bytes 112 to 115).

18.9.3 Spin out tracking sectors

The spin out tracking sectors must be pre-formatted but their addresses do not need to be accessable by the drive.

18.10 Coding method

All data except the address marks and the tracking pads shall be delay modulation mark (DM-M) encoded.

DM-M code translates data bits to transitions on the media. Each data bit is represented by two DM-M Channel bits. A ONE in a DM-M Channel bit indicates a transition of the record laser power level which produces a transition in reflectivity of the media due to laser marking. The encoding rules for DM-M Channel bits are as follows:

- a ONE data bit shall be represented by two Channel bits set to: ZERO ONE,
- a ZERO data bit preceded by a ZERO data bit shall be represented by two Channel bits set to: ONE ZERO,
- a ZERO data bit preceded by a ONE data bit shall be represented by two Channel bits set to: ZERO ZERO.

The data shall be recorded most significant bit first.

The edges of all data shall be recorded with an accuracy of ± 17,5 % of a data bit.

Copyright International Organization for Standardization
Provided by IHS under license with ISO
No reproduction or networking permitted without license from IHS
Not for Resale

Table 6 - User sector format

	Length (bytes)	Field
Pre-formatted user sector header	19	VFO sync
	4	Phase sync
	1	VFO sync
	1	Address mark 0
	1	VFO sync
	4	Sector address
	2	CRC-16
User data field preamble and pre-formatted tracking pad	1	GAP
	20	VFO sync
	4	Phase sync
	1	Address mark 1
	7	Data control field
	4	Phase sync
	1	Address mark 2
	4	Phase sync
	1	Address mark 3
	4	Phase sync
	4	Data control field
	3	PAD
	3	Data control field
	1	Address mark 4
	1	Phase sync
User data field and pre-formatted tracking pads	52	Data bytes 1 to 52
	3	PAD
	57	Data bytes 53 to 109
	3	PAD
	57	Data bytes 110 to 166
	3	PAD
	57	Data bytes 167 to 223
	3	PAD
	57	Data bytes 224 to 280
	3	PAD
	57	Data bytes 281 to 337
	3	PAD
	57	Data bytes 338 to 394
	3	PAD
	57	Data bytes 395 to 451
	3	PAD
	57	Data bytes 452 to 508
	3	PAD
	57	Data bytes 509 to 565
	3	PAD
	57	Data bytes 566 to 622
	3	PAD
	57	Data bytes 623 to 679

(continued)

--`,,```,,,,````-`-`,,`,,`,`,,`---

Copyright International Organization for Standardization
Provided by IHS under license with ISO
No reproduction or networking permitted without license from IHS

Not for Resale

Table 6 - Concluded

	Length (bytes)	Field
	3	PAD
	57	Data bytes 680 to 736
	3	PAD
	57	Data bytes 737 to 793
	3	PAD
	57	Data bytes 794 to 850
	3	PAD
	57	Data bytes 851 to 907
	3	PAD
	57	Data bytes 908 to 964
	3	PAD
	57	Data bytes 965 to 1021
	3	PAD
	3	Data bytes 1022 to 1024
EDAC & one tracking pad	54	EDAC 1-54
	3	PAD
	26	EDAC 55-80
Interface sector gap	8	GAP
Total	1260	

Copyright International Organization for Standardization
Provided by IHS under license with ISO
No reproduction or networking permitted without license from IHS
Not for Resale

Table 7 - Identification sector format

Byte number	length (bytes)	Identification sector header description
0	10	Disk ID. The number which is on the carrier label (IRV of ISO/IEC 646 aannnnnnnn, where "aa" are two letters and "nnnnnnnn" are eight digits.
10	2	Reserved for future standardization, set to ZERO for this International Standard.
12	1	This byte shall be set to (00) for Side A, and to (01) for Side B.
13	8	Date: The date that disk formatting was completed by the manufacturer (MMDDYYYY).
21	1	Number of bands formatted.
22	1	Number of bytes per band record. This byte shall be set to 128.
23	51	(Reserved for manufacturing production use).
74	2	Size in sectors of BSM excluding the ID sector.
For bytes 76 to 104, n is a signed binary number with a ONE as the most significant bit in the MSB indicating a negative number.		
76	1	This byte shall specify the testing wavelength L1 in nanometres as a number n such that n = 0,5 (L1 - 830). This byte shall be set to n = 0.
77	1	This byte shall specify the baseline reflectance R1 at wavelength L1 as a number n such that n = 100 (R1 - 0,11).
78	2	This byte shall specify the rotational frequency N0 in hertz, for Band 0 testing, as a number n such that n = 10 (N0 - 13,1). This byte shall be set to n = 0.
80	2	This byte shall specify the rotational frequency N1 in hertz, for Band 1 testing, as a number n such that n = 10 (N1 - 15,7). This byte shall be set to n = 0.
82	2	This byte shall specify the rotational frequency N2 in hertz, for Band 2 testing, as a number n such that n = 10 (N2 - 18,9). This byte shall be set to n = 0.

(continued)

Copyright International Organization for Standardization
Provided by IHS under license with ISO
No reproduction or networking permitted without license from IHS
Not for Resale

Table 7 - Identification sector format (continued)

Byte number	Length (bytes)	Identification sector header description
84	2	This byte shall specify the rotational frequency N3 in hertz, for Band 3 testing, as a number n such that n = 10 (N3 - 22,7). This byte shall be set to n = 0.
86	2	This byte shall specify the rotational frequency N4 in hertz, for Band 4 testing, as a number n such that n = 10 (N4 - 27,2). This byte shall be set to n = 0.
88	1	This byte shall specify the maximum read power Pr in milliwatts for the user zone as a number n between 0 and 255 such that n = 20 (Pr - 0,8).
89	1	This byte shall specify the write power Pwo in milliwatts, for the outside diameter of a Band, as a number n = 20 (Pwo - 11).
90	1	This byte shall specify the write power Pwi in milliwatts, for the inside diameter of a Band, as a number n = 20 (Pwi - 8,8).
91	1	This byte shall specify the pre-emphasis in nanoseconds required at the outside diameter of a Band as a number n = 10 (PEO - 10).
92	1	This byte shall specify the pre-emphasis in nanoseconds required at the inside diameter of a Band as a number n = 10 (PEI - 10).
93	1	This byte shall specify the post-emphasis in nanoseconds required at the outside diameter of a Band as a number n = 10 (EPO - 6).
94	1	This byte shall specify the post-emphasis in nanoseconds required at the inside diameter of a band as a number n = 10 (EPI - 6).
95	1	This byte shall be set to all ZEROs to specify delay delay modulation mark (DM-M).
96	1	This byte shall be set to all ZEROs to specify the ECC code R-S LDC degree 16 and 5 interleaves.
97	2	These two bytes shall be set to all ZEROs to specify the number of user bytes per sector as 1024.

(continued)

Copyright International Organization for Standardization
Provided by IHS under license with ISO
No reproduction or networking permitted without license from IHS
Not for Resale

Table 7 Identification sector format (continued)

Byte number	Length (bytes)	Identification sector header description
99	1	This byte shall specify the ratio of the signal obtained from marks written at the lowest repetition rate at the outside diameter of a band to the signal obtained from the blank area as a number n = 100 (dRSn/dt).
100	1	This byte shall specify the polarity of the pre-formatted information. If the byte is set to all ZEROs, the polarity is from dark to bright. If the byte is set to all ONEs, the polarity is from bright to dark.
101	1	This byte shall specify the ratio of the signal obtained from the user data to the signal obtained from the pre-written information for the lowest repetition rate marks at the outside of the band as a number n = [20 (dILO user data / dILO pre-written data) - 18].
102	1	This byte shall specify the polarity of the user data. If the byte is set to all ZEROs, the polarity is from dark to bright. If the byte is set to all ONEs, the polarity is from bright to dark.
103	1	This byte shall specify the nominal track pitch TP as a number n = 20 (TP - 1,8).
104	1	This byte shall specify the ± tolerance TPT of the nominal track pitch as a number n. n = 100 (TPT - 0,2).
105 to 123	19	Reserved, shall be ignored in interchange.
124 to 125	2	These two bytes shall specify the length indication of Bad Sector Maps. These bytes shall set to (02) for Bad Sector Maps of variable length, and to (00) for Bad Sector Maps with a length of 22 sectors.
126 to 127	2	Reserved for future standardization, set to ZERO for this International Standard.

Copyright International Organization for Standardization
Provided by IHS under license with ISO
No reproduction or networking permitted without license from IHS
Not for Resale

Table 7 - (continued)

Byte number	Length (bytes)	Band record description
The following fields describe a band record which is repeated for each band n (n = 0 to 4). The "byte number" in the Identification Sector may be calculated by adding [(n+1) 128] to the byte number in the following band record (i.e., sequential 128-byte band records follow the 128-byte header in the disk Identification Sector.		
0 to 3	4	Band n first address formatted, the address of the first lead-in sector.
4 to 7	4	Band n first trackable address, indicates the first sector of the band which can be reliably tracked by the drive. Note that sectors between here and the following field are used for manufacturing test data.
8 to 11	4	Band n disk Identification Sector address, the location of the sector that contains this identification information.
12 to 15	4	Starting address of the bad sector map (BSM) in band n .
16 to 19	4	Band n drive supplemental data address, specifies the location of a sector which is written by the drive.
20 to 23	4	Band n user supplemental data address, included to support future scenarios which would require drive software to be aware of user configuration/usage of an optical disk.
24 to 27	4	Band n first available drive address. The drive maps the usage of the disk from this point to the first trailer sector for this band. Note that the disk identification contains default, but not necessarily actual pointers to the drive calibration sectors, reserved sectors, or user data sectors.
28 to 31	4	Band n maintenance/calibration starting address. This is the default value used by the drive for maintenance/calibration sector mapping.
32 to 35	4	Band n reserved sector starting address. This is the default value used by the drive for reserved sector mapping.

Copyright International Organization for Standardization
Provided by IHS under license with ISO
No reproduction or networking permitted without license from IHS
Not for Resale

Table 7 - (concluded)

Byte number	Length (bytes)	Band record description
36 to 39	4	Band n user data starting address. This is the default value used by the drive for user sector mapping.
40 to 43	4	Band n last trackable address. Sectors between this address and the end of the band are not addressable by the drive.
44 to 47	4	Band n last address formatted, the address of the last trailer sector.
48 to 51	4	Band n number of guaranteed user sectors. This is the default value used by the drive for logical address mapping (i.e., how many user logical addresses get mapped to this band).
52 to 55	4	Band n number of guaranteed available sectors for drive (from first available drive address to the "train start address", minus the number of start of life defects, minus anticipated growth defects. This indicates to the drive how many sectors it can anticipate to successfully write in this band. From this, the drive can decide how to allocate calibration sectors, reserved sectors and user data sectors.
56 to 59	4	Outer radius of band n expressed as the number of tenths of micrometers, truncated off to integer.
60 to 63	4	Inner radius of band n expressed as the number of tenths of micrometers, truncated off to integer.
64 to 111	48	Reserved for manufacturers'use.
112 to 115	4	Band n maintenance/calibration starting address. This is the default value used by the drive for maintenance/calibration sector mapping at the inner band diameter. If these bytes are set to all ZEROs, there is no inner diameter test area.
116 to 127	12	Reserved
128 Bytes per band or 640 bytes total for a band record		

The total number of bytes for the sector header and the band record is 768 bytes. The bytes 768 to 1023 are reserved.

Copyright International Organization for Standardization
Provided by IHS under license with ISO
No reproduction or networking permitted without license from IHS
Not for Resale

Table 8 - Bad Sector Map format

Field name	Byte Number	Length	Function
BSMHEADER	0-15	16	To present the index to the start of data for each band. BSM HEADER has the five subfields given below.
(INDEX0)	0-1	2	The relative address index from this sector to the header for Band 0.
(INDEX1)	2-3	2	The relative address index from this sector to the header for Band 1.
(INDEX2)	4-5	2	The relative address index from this sector to the header for Band 2.
(INDEX3)	6-7	2	The relative address index from this sector to the header for Band 3.
(INDEX4)	8-9	2	The relative address index from this sector to the header for Band 4.
RESERVED	10-15	6	Reserved.
BANDHEADER	16-23	8	Counts of the number of sectors and records in the Bad Sector Map. BANDHEADER has the two subfields listed below.
(SECCOUNT)	16-19	4	Count of the number of sectors used by the current band.
(DEFCOUNT)	20-23	4	Count of the number of defective sectors on the current band. This count indicates the total number of BADSECADD records.
BADSECADD	24-27	4	Absolute address of a bad sector. This field is repeated for every defective sector in the band.

NOTE 1 - The field BADSECADD is repeated for each defective sector in the band. It is a sequential listing of all defective sectors. It is likely that these repeated BADSECADD records will span contiguously several sequential sectors.

NOTE 2 - No defective sectors shall be skipped within the Bad Sector Maps.

NOTE 3 - The Bad Sector Map shall be located near the start of each band as defined by the contents of the disk Identification Sector. Each Bad Sector Map (in each band) will contain information about all sectors of that surface of the optical disk that are bad.

Copyright International Organization for Standardization
Provided by IHS under license with ISO
No reproduction or networking permitted without license from IHS
Not for Resale

NOTE 4 - The record BSMHEADER will appear at the start of each Bad Sector Map and before each bandheader. It is the first record of the sector pointed to by the disk Identification Sector.

NOTE 5 - The BSM does not necessarily have to be written contiguously. There can be blank sectors preceding the BANDHEADER'S. However, if the BSM is written contiguously then the values of the SECOUNT fields can be computed from the INDEXi fields.

Copyright International Organization for Standardization
Provided by IHS under license with ISO
No reproduction or networking permitted without license from IHS
Not for Resale

Table 9 - Structure of the Bad Sector Map

BSMHEADER and BANDHEADER are records that always are at the start of a band.

For each Bad Sector Map in a band:

```
                                    (Sector number given in the
BSMHEADER                           Identification Sector)
  BANDHEADER       (Band 0)                (sector index 0)
    BADSECADD
      *
      *
      *
    BADSECADD
BSMHEADER
  BANDHEADER       (Band 1)                (sector index 1)
    BADSECADD
      *
      *
      *
    BADSECADD
BSMHEADER
  BANDHEADER       (Band 2)                (sector index 2)
    BADSECADD
      *
      *
      *
    BADSECADD
BSMHEADER
  BANDHEADER       (Band 3)                (sector index 3)
    BADSECADD
      *
      *
      *
    BADSECADD
BSMHEADER
  BANDHEADER       (Band 4)                (sector index 4)
    BADSECADD
      *
      *
      *
    BADSECADD
```


Copyright International Organization for Standardization
Provided by IHS under license with ISO
No reproduction or networking permitted without license from IHS
Not for Resale

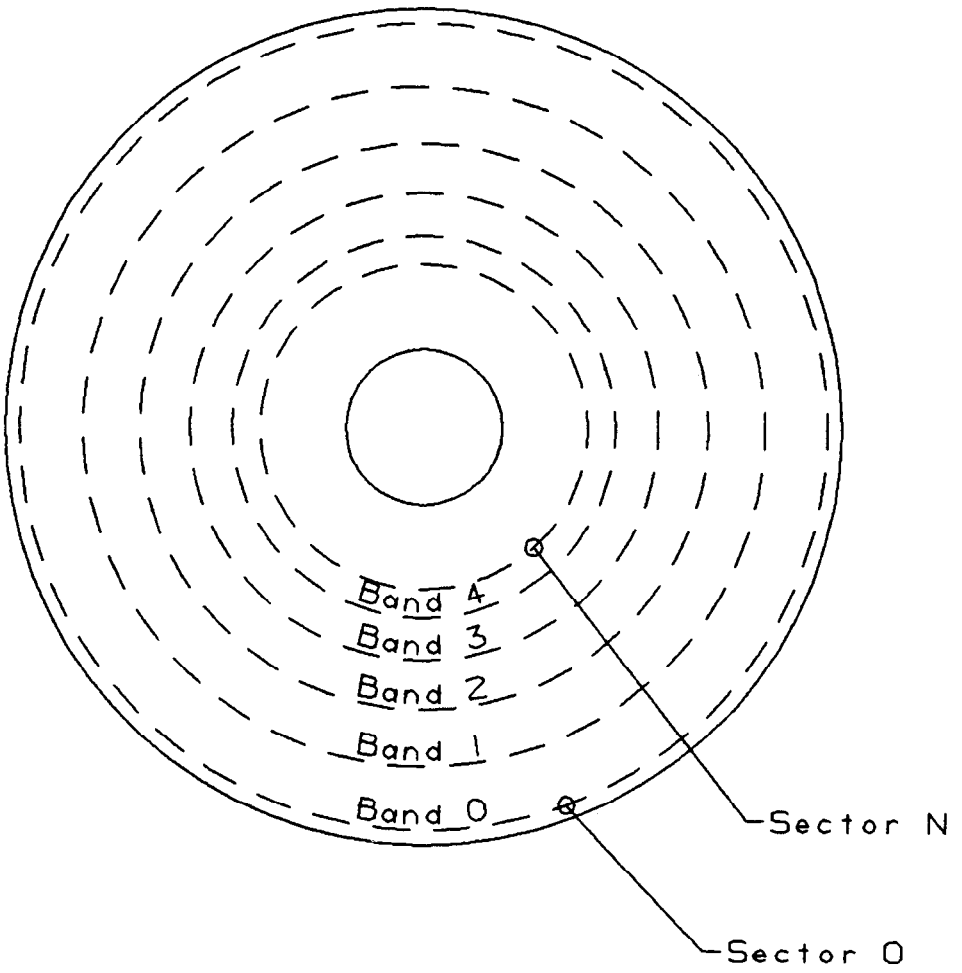

Figure 26 - Band organization

Copyright International Organization for Standardization
Provided by IHS under license with ISO
No reproduction or networking permitted without license from IHS
Not for Resale

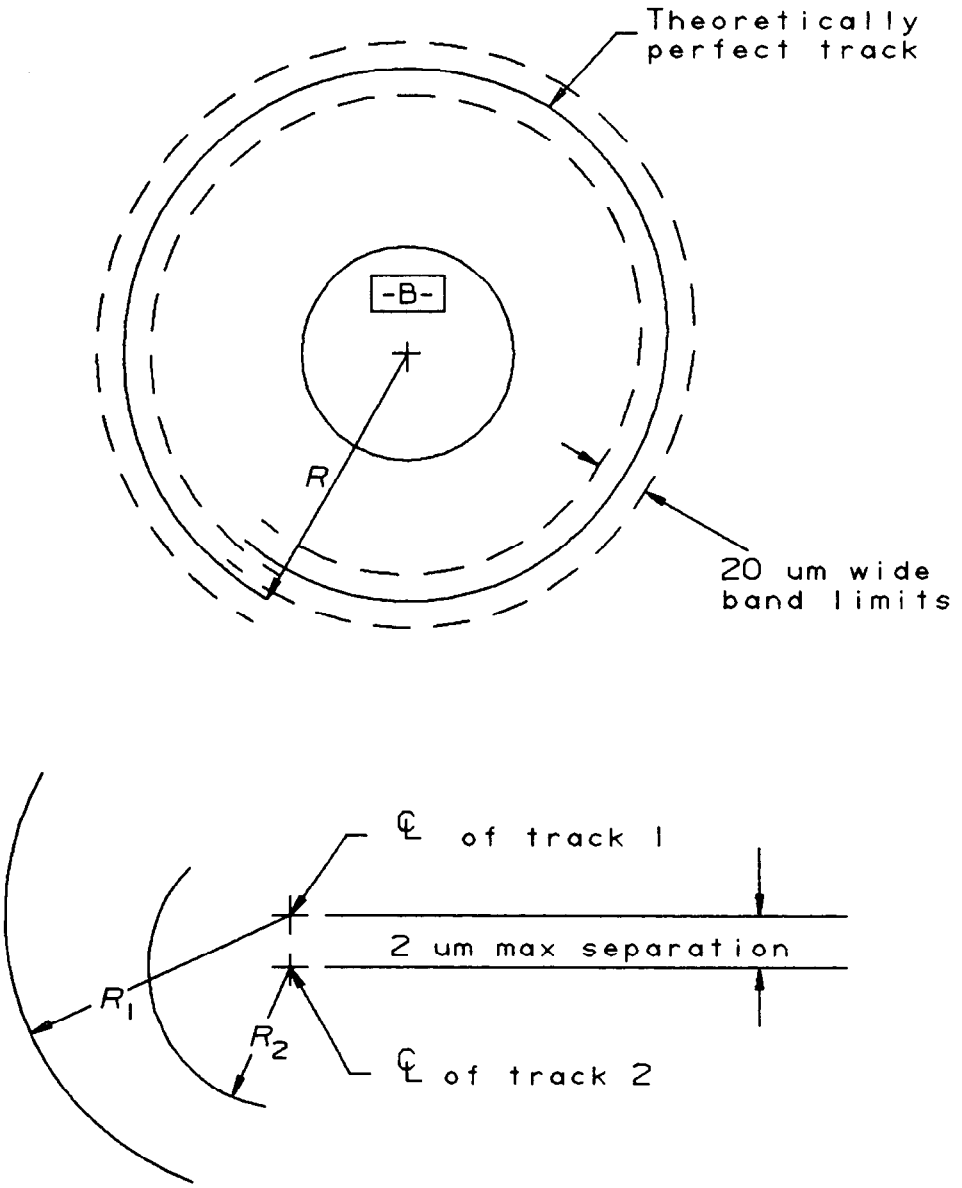

Figure 27 - Track concentricity

Copyright International Organization for Standardization
Provided by IHS under license with ISO
No reproduction or networking permitted without license from IHS
Not for Resale

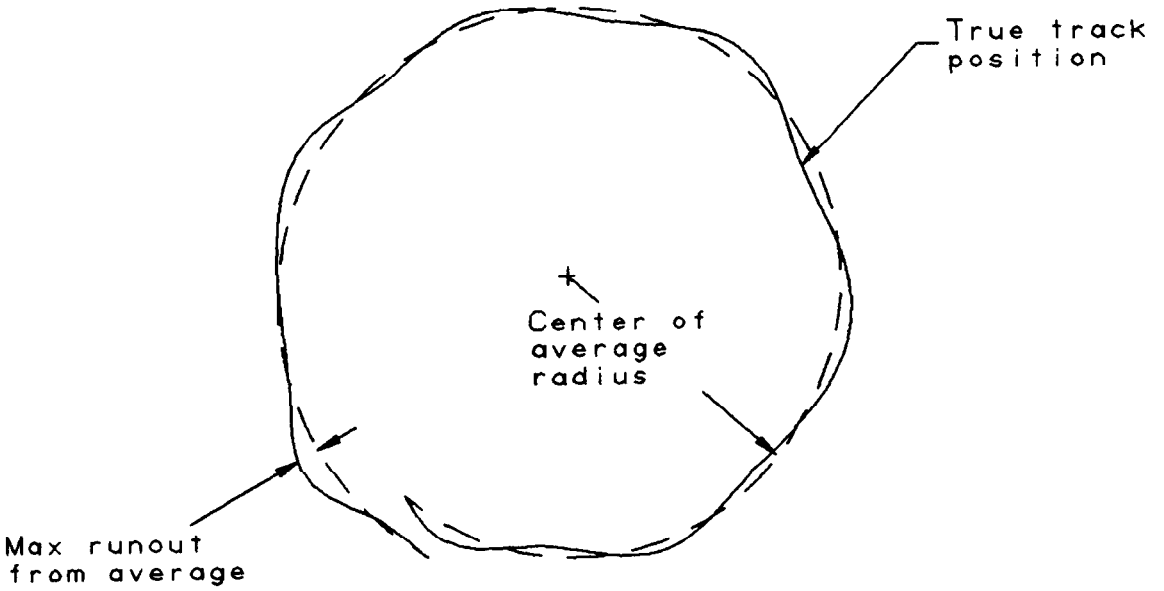

Figure 28 - Track runout

Copyright International Organization for Standardization
Provided by IHS under license with ISO
No reproduction or networking permitted without license from IHS
Not for Resale

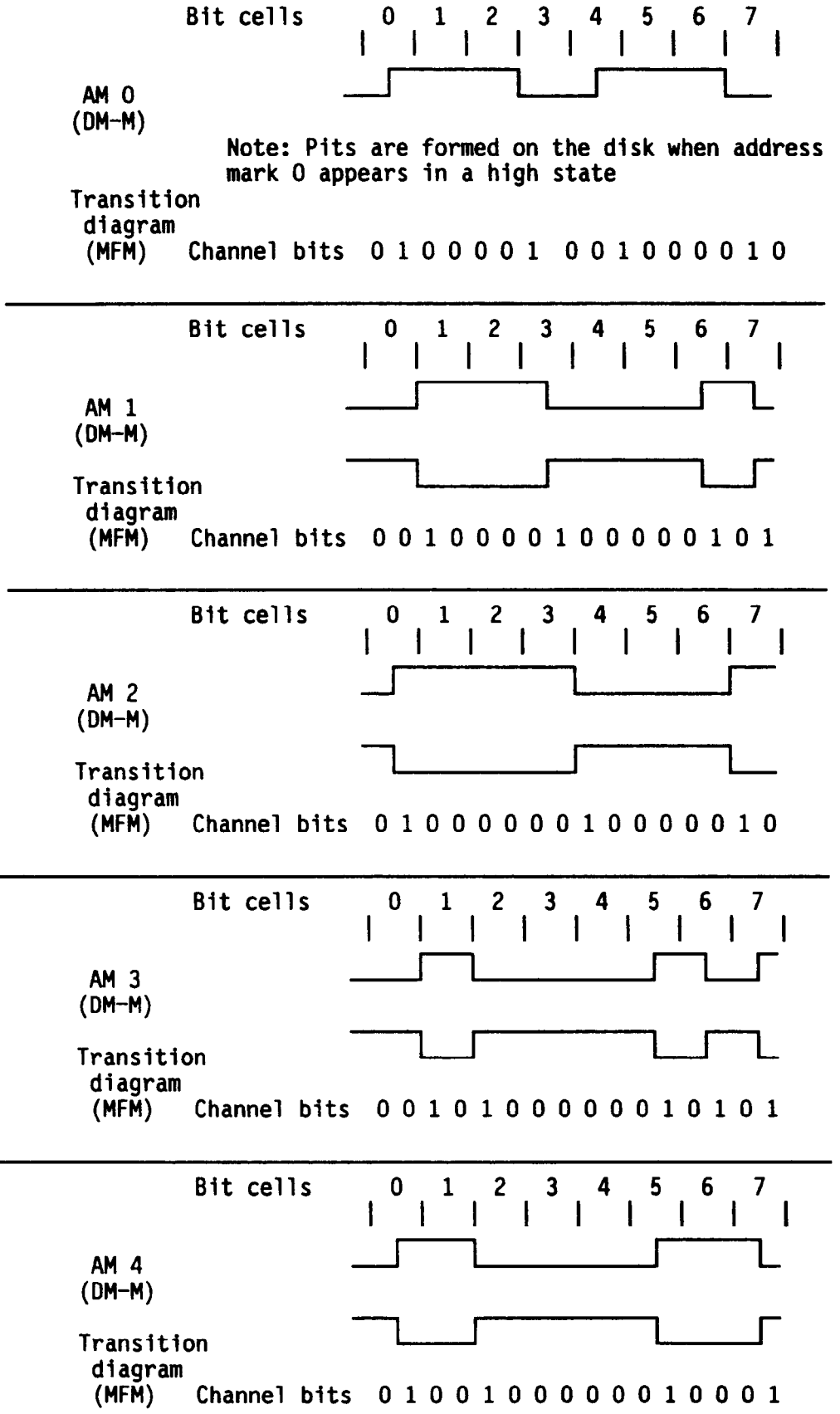

Figure 33 - Address mark definition

Copyright International Organization for Standardization
Provided by IHS under license with ISO
No reproduction or networking permitted without license from IHS
Not for Resale

Annex A
(normative)

Definition of air cleanliness of class 100 000

A.1 Classification

Classification of air cleanliness is based on particle count with a maximum allowable number of specified minimum sized particles per unit volume and on statistical average particle size distribution.

A.2 Definition of class 100 000

The particle count shall not exceed a total of 3 500 000 particles per cubic meter of size 0,5 μm and larger. The statistical average particle size distribution is given in figure A.1. Class 100 000 means that 3 500 000 particles per cubic meter of a size 0,5 μm are allowed, but only 35 000 particles per cubic meter of size 4,0 μm.

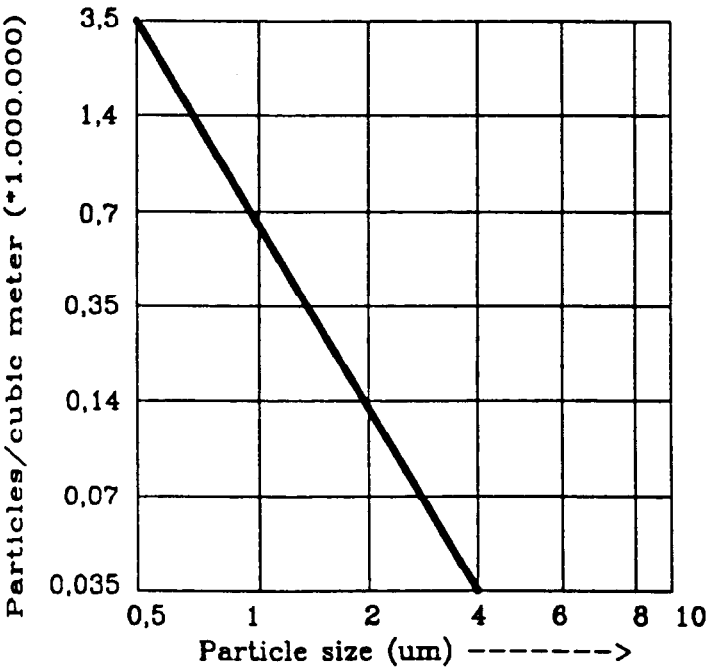

Copyright International Organization for Standardization
Provided by IHS under license with ISO
No reproduction or networking permitted without license from IHS
Not for Resale

Annex B
(informative)

Recommendation for transportation

B.1 The optical disk cartridge should be transported in a shipping package agreed upon by the user and the supplier.

B.2 The transportation period should not exceed 14 consecutive days.

B.3 The optical disk cartridge within its agreed upon shipping package should not be exposed outside the following environmental conditions during the transportation period.

Temperature	-20 °C to 55 °C
Relative humidity	5% to 90%
Wet bulb temperature	29 °C maximum
Atmospheric pressure	75 kPa to 110 kPa
Temperature gradient	20 °C/h max.
Relative humidity gradient	10 %/h max.

B.4 No condensation on or in the optical disk cartridge should occur.

B.5 The optical disk cartridge exposed to these conditions should be in the operating environment at least two hours before use.

Copyright International Organization for Standardization
Provided by IHS under license with ISO
No reproduction or networking permitted without license from IHS
Not for Resale

Annex C
(normative)

Mechanical test method

C.1 Testing environment

Unless otherwise specified, tests and measurements made on the optical disk cartridge to check the requirements of this International Standard shall be carried out under the following conditions:

Temperature	23 °C ± 2 °C
Relative humidity	45 % to 55 %
Atmospheric pressure	75 kPa to 110 kPa
Conditioning before testing	48 h minimum

No condensation on or within the disk shall be allowed to occur.

Measurement precision shall conform to the following description of the Performance-Tolerance Ratio (P/T) where P/T < 0,2:

$$P/T = \frac{6\sigma}{\text{tolerance}}$$

where:

σ = measurement standard deviation

tolerance = specification upper bound minus specification lower bound

C.2 Mechanical test conditions

a) The surface of the support sleeve which contacts the optical disk at datum target A1 during testing, shall have a maximum peak-to-peak physical displacement perpendicular to the datum target A1 of 0,0025 mm.

b) A clamping force F1 smaller than 125 N shall be applied uniformly over the clamping zone.

c) A typical mechanical clamping method is shown in figure C.1

- The centring cone angle (AB) shall be 10° ± 1°.
- The centring cone force (F2) shall be 15,6 N ± 2,2 N.

C.3 Test procedures

Accepted industry practice shall be used to measure dimensional and physical characteristics unless otherwise specified.

Copyright International Organization for Standardization
Provided by IHS under license with ISO
No reproduction or networking permitted without license from IHS
Not for Resale

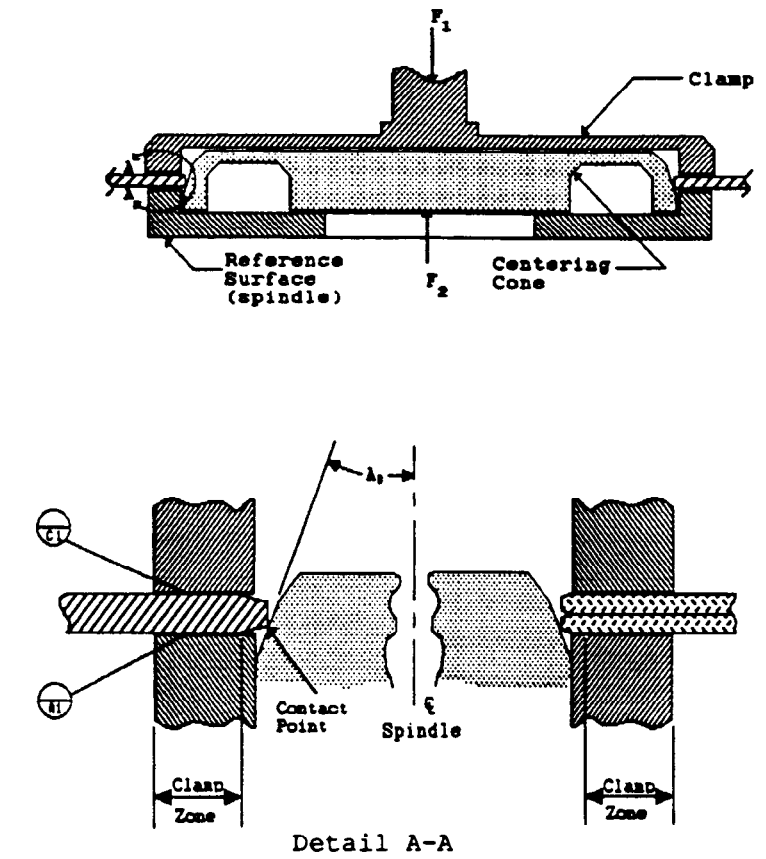

Figure C.1 - Mechanical test conditions

Copyright International Organization for Standardization
Provided by IHS under license with ISO
No reproduction or networking permitted without license from IHS
Not for Resale

Annex D
(normative)

Imbalance test method

D.1 Introduction

Imbalance of the disk can cause excessive radial runout and corrupt linear velocity uniformity. Testing the imbalance of the disk requires the use of commonly available dynamic balancing equipment.

D.2 Test Procedure

Imbalance testing should be conducted at the highest intended operating angular velocity for the system.

Copyright International Organization for Standardization
Provided by IHS under license with ISO
No reproduction or networking permitted without license from IHS
Not for Resale

Annex E
(normative)

Apparent axial runout test method

E.1 Introduction

Apparent axial runout is measured using the nearly paraxial optical lever gauge system shown in concept in figure E.1. This system uses a helium neon laser which is directed toward the surface in question through a focusing lens with a low numerical aperture (e.g. = 0,25). The light is reflected from the surface and directed toward a beam position sensing photodetector. As the distance between the surface and the focusing lens changes, the return beam is deflected along the surface of the photodiode.

This system is sensitive to tilt in the plane of the incident and reflected beams. This tilt sensitivity confounds the axial runout measurement. If the linear position detector is aligned parallel to the tangential direction, then the axial runout measurement is confounded by sensitivity to tilt caused by disk warpage. If the linear position detector is aligned parallel to radial direction then the axial runout measurement is confounded by sensitivity to tilt caused by a bowl-shaped deflection of the disk due to gravity or other sources. Careful selection of the detector orientation will minimize the detrimental sensitivity to tilt.

E.2 Test procedure

E.2.1 The system is calibrated using a reflector and translation stage in place of the optical disk.

E.2.2 Record the photodiode output signal as a function of the measured distance of the reflector from the focusing lens.

E.2.3 Replace the reflector/translation stage with the optical disk.

E.2.4 Measure apparent axial runout caused by disk warpage with the detector parallel to the radial direction directly at the outside diameter of Band 0 (174,991 mm) for the disk rotating at the rates intended for normal use (e.g. 786, 942, 1 134, 1 362, and 1 632 rpm). Note that while the average value of the measurement contains a component caused by tilt due to gravity or the "bowl" shape of the disk, etc., the peak-to-peak value is the runout due to warpage.

E.2.5 Measure the axial runout caused by deflection due to gravity with the detector aligned parallel to the tangential direction with the disk stationary. Translate the disk or measurement system along a radius from 70 mm to 175 mm relative to the rotational centre of the disk.

Copyright International Organization for Standardization
Provided by IHS under license with ISO
No reproduction or networking permitted without license from IHS
Not for Resale

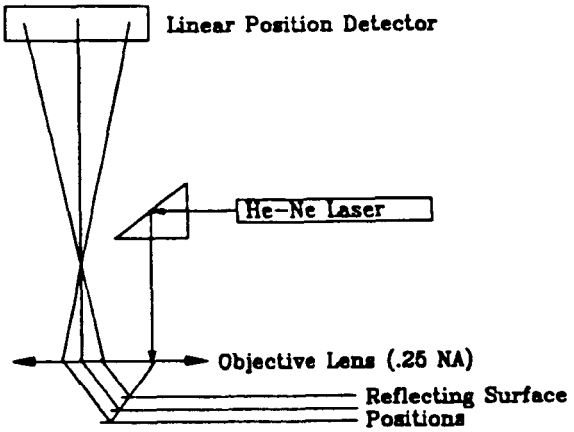

Figure E.1 - Apparent axial runout test method

Copyright International Organization for Standardization
Provided by IHS under license with ISO
No reproduction or networking permitted without license from IHS
Not for Resale

Annex F
(normative)

Residual focus error test method

F.1 Introduction

Residual focus errors can be caused by thickness variations in the protective layer as well as axial runout and acceleration of the disk. Furthermore, it is necessary to measure the completed optical disk assembly to assure compliance with the specification for residual focus error. It may also be desirable to measure the protective layer as one component in the optical disk assembly.

Residual focus errors for the completed optical disk assembly must be measured using the system shown in concept in figure F.1. The closed loop focus servo system shall have sufficient bandwidth such that the residual focus error signal provides a linear, high-resolution measurement of disk position. A position sensor is employed to provide a low resolution measurement of the focusing lens position, therefore also the disk. This sensor can be an interferometer, or an optical, capacitive, or electromagnetic device. When the residual focus error signal is added to the lens position sensor signal, an exact measure of the position of the disk is achieved. This disk position signal is then processed by a digital or analog filter whose disturbance rejection transfer function is given in the following equation. The output of the filter is a simulation of the residual focus error produced by such a "standardized" servo system.

Residual focus errors for the protective layer component are measured using the interferometer system shown in concept in figure F.2. The output signal is processed by a filter which represents the disturbance rejection transfer function given in the following equation. The interferometer system is inherently accurate and provides a means of isolating the contribution of the protective layer to the residual focus error (RFE).

$$\frac{\text{RFE}}{\text{Apparent deviation}} = \frac{1}{1+\dfrac{G\omega_n^2\left(1+\dfrac{s}{a}\right)}{\left(1+\dfrac{s}{b}\right)\left(s^2+2sz\omega_n+\omega_n^2\right)}}$$

where:

G = 400

b = 2π 5 600 rad/s

a = 2π 700 rad/s

ω_n = 2π 40 rad/s

z = ζ 0,2 typ.

s = $j2\pi f$ (Laplace Transform variable)

Copyright International Organization for Standardization
Provided by IHS under license with ISO
No reproduction or networking permitted without license from IHS
Not for Resale

F.2 Calibration of disk position measurement system

F.2.1 A translation stage is employed to move the measurement system relative to a suitable stationary reflector with the appropriate reflectivity and protective layer configuration.

F.2.2 With the measurement system positioned at the centre of the focus error signal range, translate the measurement system a known distance within the linear range of the focus error signal detector to calibrate its output as a function of distance.

F.2.3 Return the measurement system to the centre of the focus signal range and close the focus servo loop.

F.2.4 Translate the measurement system a known amount to calibrate the lens position detection system as a function of distance.

F.2.5 Replace the stationary reflector with the completed optical disk assembly.

F.3 Test procedure for completed optical disk assembly

Measure the residual focus error at the centre of each band of the disk while rotating the disk at the intended rotational speed for each location (786 for Band 0, 942 for Band 1, etc.).

F.4 Test procedure for protective layer component

F.4.1 The sample is held in the system in a manner consistent with its orientation during intended use.

F.4.2 The interferometer system should scan the surface of the sample in predetermined patterns to indicate the effect of apparent thickness variation on the write/read process.

F.4.3 The interferometer output signal is a measure of the double-pass optical path difference induced by apparent protective layer thickness variations. This signal is divided by 2 to give a measure of the apparent position deviation of the disk. This signal is then processed by a filter having the transfer function representing the disturbance rejection capability of the focus servo system as shown above.

F.4.4 The output of the filter above is a measure of the residual focus error caused by the apparent protective layer thickness variations.

Copyright International Organization for Standardization
Provided by IHS under license with ISO
No reproduction or networking permitted without license from IHS
Not for Resale

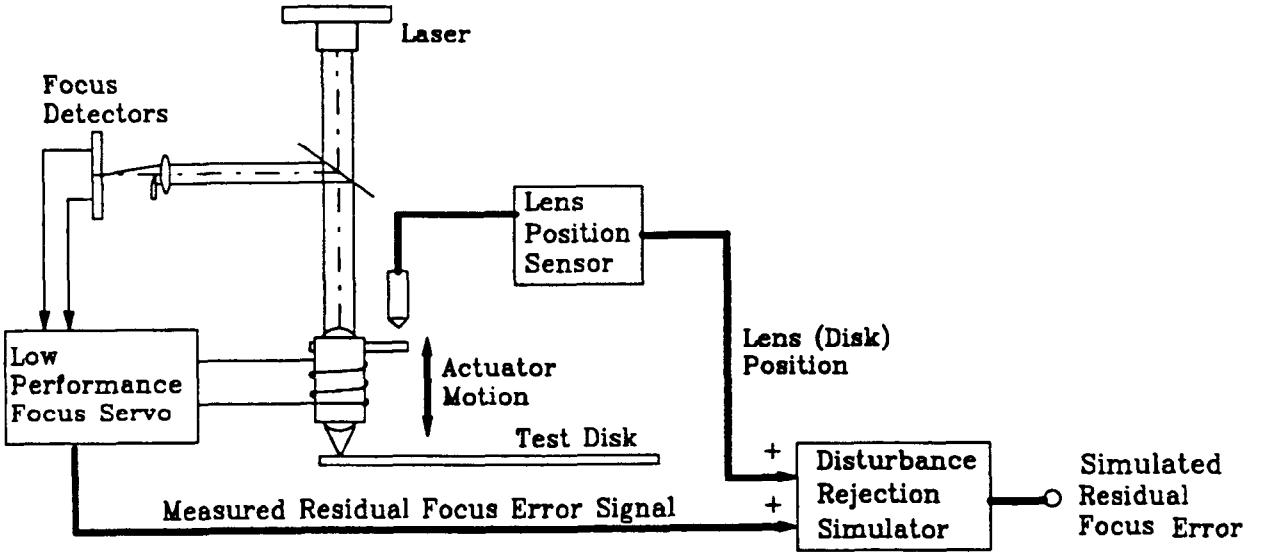

Figure F.1 - Residual focus error test system - Completed optical disk assembly

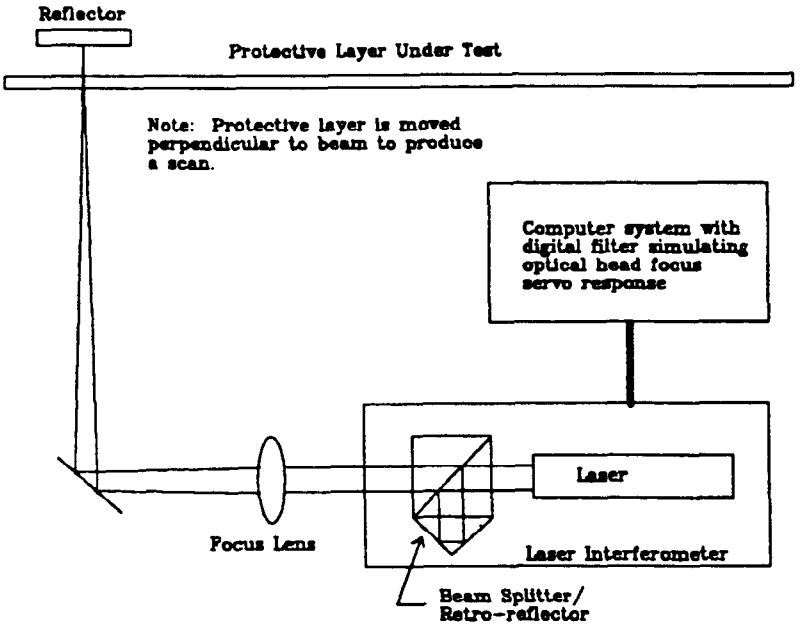

Figure F.2 - Residual focus error gauge - Protective layer component

Copyright International Organization for Standardization
Provided by IHS under license with ISO
No reproduction or networking permitted without license from IHS
Not for Resale

Annex G
(normative)

Drop test method

G.1 Introduction

The purpose of the drop test is to determine the success with which data can be recovered from an optical disk cartridge which has been subjected to the specified fall. This test evaluates conformance with the drop test specification based on preservation of data integrity and cartridge functionality since it is necessary to load and unload the disk in order to recover data.

G.2 Test procedure

G.2.1 Record a delay modulation mark encoded test track consisting of random data or a pseudo-random binary sequence of length 2^n-1 where $n > 9$ in each band on both sides of the optical disk.

G.2.2 Determine the integrity of the recorded data by reading the data under nominal operating conditions as given in the related media standard (with EDAC, etc.). Insure that no bad sectors were encountered by reading the bad sector map.

G.2.3 Drop the optical disk cartridge on each surface and on each corner from a height of 760 mm onto a concrete floor covered with a 2 mm thick vinyl layer.

G.2.4 Each surface and corner shall withstand such an impact without any functional failure.

G.2.5 Re-read the recorded test data to verify that data integrity was preserved.

G.2.6 Write and read an additional test track in each band of the optical disk as in G.2.1 and G.2.2 above.

Copyright International Organization for Standardization
Provided by IHS under license with ISO
No reproduction or networking permitted without license from IHS
Not for Resale

Annex H
(normative)

Dead weight strength test method

H.1 Introduction

This test shall be conducted by applying a force, using a 19 mm diameter rod with a flat end having a 1,6 mm radius edge, at any point on the caddy.

The force shall be 132,3 N.

H.2 Test Procedure

H.2.1 Record a delay modulation mark encoded test track consisting of random data or a pseudo-random binary sequence of length 2^n-1 where $n > 9$ in each band on both sides of the optical disk.

H.2.2 Determine the integrity of the recorded data by reading the data under nominal operating conditions as given in the related media standard (with EDAC, etc.). Ensure that no bad sectors were encountered by reading the bad sector map.

H.2.3 Perform the dead weight strength test described in H.1.

H.2.4 Re-read the recorded test data to verify that data integrity was preserved.

H.2.5 Write and read an additional test track in each band of the optical disk as in H.2.1 and H.2.2 above.

Copyright International Organization for Standardization
Provided by IHS under license with ISO
No reproduction or networking permitted without license from IHS
Not for Resale

Annex J
(normative)

Double-pass retardation test method

J.1 Introduction

The index of refraction of a material can be different for different polarizations of light. Working in a simplified two dimensional space, two indices can exist. One is in the direction called the fast axis, the other in the slow axis. The difference between the two indices of refraction is defined as the birefringence of the material.

$$\text{Birefringence} = |n_x - n_y|$$

Retardation is the optical path difference due to the birefringence of the sample. That is, the exiting wave of light polarized in the direction of one axis is behind or retarded relative to light polarized in the direction of the other axis. This retardation is a function of both the birefringence and thickness of the material. Double the thickness of a birefringent material and the retardation is doubled.

Protective layer birefringence is manifest in modulation of the intensity of the light beam returning to the photodetectors and thus causing feedback to the laser. Therefore, a direct measure of optical modulation caused by the protective layer birefringence would serve as a direct and meaningful measurement of the birefringence effect relevant to the detection method. Thus, the only functional quantity which can be used to specify birefringence of an optical disk is the amount of light returning from the disk with incorrect polarization.

J.2 Measurement equipment set-up

The system shown in concept in figure J.1 provides a measurement of the amount of light returning from the disk with incorrect polarization. The basic method requires a beam with a wavelength of 830 nm and equal intensity in all planes of polarization. This can be produced easily by passing a collimated linearly polarized laser beam through a quarter wave plate to produce circularly polarized light. The orderliness of the circular polarization in this beam is not needed, only the equal intensity of all polarizations.

The beam then passes through a linear polarizer which is rotating at a moderate rate. In practice, 1000 rpm seems to be a reasonable rotation rate. This polarizer passes only one polarization thus the beam becomes linearly polarized with the plane of polarization determined by the rotating polarizer.

The beam next passes through the protective layer sample, reflects off the mirror (or reflecting layer of the disk assembly), passes back through the protective layer sample to the rotating linear polarizer. If no retardation is introduced in this path, the return beam will have the same plane of polarization as the original incident beam. Since the polarizing filter is rotating slowly relative to the travel time of the light to the reflector and back, the beam would pass back through the polarizer unimpeded. In reality, some attenuation occurs due to the density characteristics of polarizers. he beam has a constant intensity, unaffected by the angular orientation of the rotating polarizer. The beam is finally directed to a photo-detector. This situation is shown in figure J.1 as Case 1.

If the sample causes some amount of retardation, more interesting events occur. Figure J.1, Case 2 shows a sample which has 1/2 wave of double-pass retardation. When the plane of polarization of the beam is parallel with either optical axis, no retardation occurs and the return beam is unimpeded as in the previous cases. However, when the plane is at a 45° angle, to the axes, the plane of polarization is rotated by 90°

Copyright International Organization for Standardization
Provided by IHS under license with ISO
No reproduction or networking permitted without license from IHS
Not for Resale

due to the 1/2 wave retardation induced by the sample. As a result, the return beam is completely blocked by the rotating polarizer at this angular position.

The return beam is modulated at 4 times the rate of revolution and is modulated, in this case, 100 %. (An example of this modulated signal is given in figure J.2). If the sample has 1/4 wave of double pass retardation, the beam would be modulated by 50 %. The modulation level is proportional to the retardation with the following relationship:

$$M = 1 - \cos^2\left(\frac{\pi R}{\lambda}\right)$$

$$R = \frac{\lambda}{\pi} \arccos\sqrt{1 - M} \quad \text{nm}$$

where:

M = modulation

R = retardation

The output of the detector is processed by a suitable analog or digital conversion system whose output is a direct measure of retardation.

J.3 Calibration

By using a Soleil-Babinet compensator, known amounts of retardation can be introduced into the beam path to verify the relationship described above. In practice, it is possible to show that the relationship described above is valid down to about 40 nm of retardation where the effects of random noise in the return beam may begin to distort the measurement. System noise of 1 percent modulation would limit any detectable retardation to about 20 nm. Additional processing can correct for this distortion extending the accurate lower limit response down to 20 nm of retardation.

J.4 Test procedure

Place the sample (protective layer or completed disk assembly) into the system as shown in figure J.1. Rotate the sample at a rate of less than 14 mm/s. Plot the double pass retardation as a function of position throughout the recording zone. The optical disk must meet the double pass retardation specification at all radii in the recording zone (70 mm to 175 mm).

Copyright International Organization for Standardization
Provided by IHS under license with ISO
No reproduction or networking permitted without license from IHS
Not for Resale

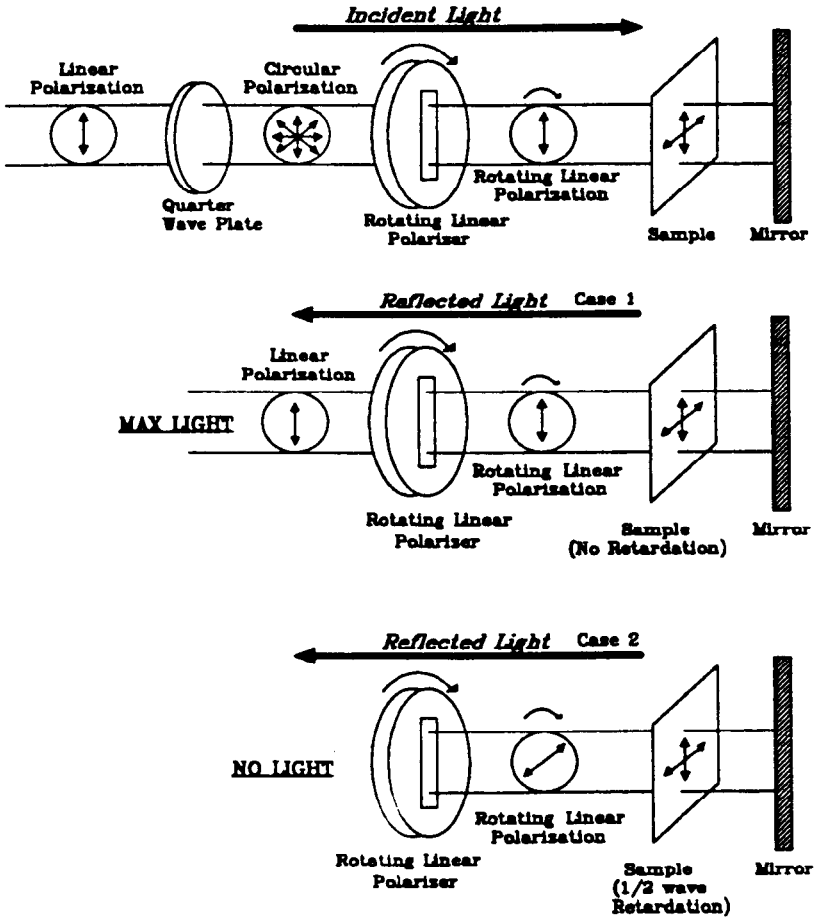

Figure J.1 -Double pass retardation test method

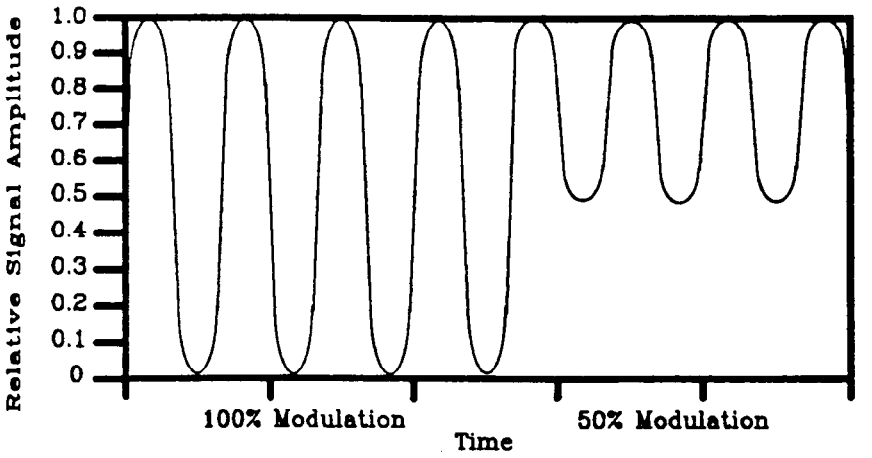

Figure J.2 - Reflected beam modulation

Copyright International Organization for Standardization
Provided by IHS under license with ISO
No reproduction or networking permitted without license from IHS
Not for Resale

Annex K
(normative)

Signal characteristics test method

K.1 Introduction

Measurement of the reflectance characteristics of the pre-recorded and user recorded marks is necessary to insure conformance to the requirements for prerecorded marks and data written in the user area. The signal parameters I_b, dI_{LO}/dt, Ramp, Symmetry, Resolution, and Tracking Push-Pull amplitudes are measured using this test method.

K.2 Definitions

K.2.1 Central aperture method

The reflected light is collected by the same objective lens through which the illumination was focused. This light is then directed onto a detector by an optical system with the same or larger aperture as the objective. The detector is larger than the redirected spot and the total light power in this spot is the reflected light signal.

K.2.2 Gated second derivative method

The reflected light signal is low pass filtered by a 5-pole Bessel filter with bandwidth at 0,75 times the bit rate. A transition is detected when the absolute value of the first derivative of the signal is greater than one third of the illumination power multiplied by the bit rate and the absolute value of the second derivative of the signal is less than 1 % of the illumination power multiplied by the square of the bit rate.

K.2.3 Pre-emphasis

The time interval that the recording optical pulses are lengthened (or shortened) as measured at the 50 % amplitude level. If the encoder generates a 100 ns pulse, 10 ns of pre-emphasis would cause the laser to emit a pulse 110 ns long, both pulses being measured at the 50 % amplitude levels. The purpose of pre-emphasis is to align the optimum write power with the recording power that produces the best combination of signal level, non-linearity, signal to noise ratio, track to track cross talk and recording power latitude.

K.2.4 Post-emphasis

The time interval that the digitized readback signal is lengthened (or shortened) as measured at its 50 % amplitude level. The purpose of post-emphasis is to correct for a systematic shortening (or lengthening) of the mark lengths read back. This effect is due to the convolution of the geometries of the read spot and the mark ends. The proper amount of post-emphasis is determined by comparing the detected mark lengths with a highly resolving read back technique.

K.3 Calibration

Measure the output of the DC coupled RF preamplifier to determine the DC voltage corresponding to 0 % reflectance (i.e. laser off) and to samples of known reflectance while in focus under the head to calibrate the system.

Copyright International Organization for Standardization
Provided by IHS under license with ISO
No reproduction or networking permitted without license from IHS
Not for Resale

K.4 Test procedure

K.4.1 Measure the DC voltage at the output of the RF preamplifier while focused over an unwritten section of the rotating disk. This measurement gives both the absolute level and uniformity of baseline reflectance, I_b. Determine conformance with 16.2, baseline reflectance specification.

An alternative method of determining baseline reflectance is to measure the sum of the preamplified focus cell outputs which have been calibrated against samples of known reflectance.

K.4.2 Write delay modulation mark encoded tracks at the lowest and highest repetition rates at the outside diameter of a band of the record area. The lowest frequency is 2,5 MHz and should be user data pattern (AAAA). The highest frequency is 5,0 MHz and should be pattern FFFF. The linear velocity at the outside diameter of the band should be 14,5 m/s. Measure the AC voltages from the 2,5 MHz and 5,0 MHz patterns using an analog or digital differentiator and time base sufficient for resolving individual marks. The write power shall be in conformance to 16.3, write power specification.

K.4.3 Write delay modulation mark encoded tracks at the lowest and highest repetition rates at the inside diameter of a band of the record area. The linear velocity at the inside diameter of the band should be 12 m/s. Measure the AC voltages.

K.4.4 Mathematically process the data from a through c above to calculate the absolute value of the peak of the first derivative of the read signal from both the rising and falling edges of the low frequency pattern. Alternatively, the first derivative data may be measured directly at the output of the disk drive first differentiator provided the RF channel is DC coupled up to that stage.

K.4.5 The tracking push-pull signal, I_{pp}, shall be measured using the DC coupled tracking photo detector preamplifier outputs, I_1 and I_2. The tracking push-pull signal is normalized to the baseline reflectance measured using I_1 and I_2 over an unrecorded area of the disk as in the following relationship:

$$I_{pp} = \frac{I_1 - I_2}{(I_1 + I_2)_{base}}$$

Copyright International Organization for Standardization
Provided by IHS under license with ISO
No reproduction or networking permitted without license from IHS
Not for Resale

Annex L
(normative)

Optical disk write power test method

L.1 Introduction

Since the pre-recorded information is an integral part of the optical disk, it is necessary to determine the required write power such that consistent data recovery can be achieved. Consistent data recovery requires that the pre-recorded information and the data consist of the same basic waveform properties. In this test method, write power will be determined by comparing data amplitudes with the amplitudes of pre-recorded information.

L.2 Test procedure

The definition of write pulse shape is given in figure L.1.

L.2.1 Record a series of delay modulation mark encoded tracks containing user data pattern (AAAA) at various powers which are expected to bracket the write power required. The user data pattern (AAAA) should correspond to 2,5 MHz and marks of 200 ns nominal length (T_{nom} in figure L.1).

L.2.2 Verify that the mean mark lengths recorded are 200 ns ± 10 ns.

L.2.3 Measure the AC voltages from the 2,5 MHz pattern for the various test write powers using a timebase sufficient for resolving individual recorded marks.

L.2.4 Mathematically process the data from L.2.3 above to calculate the absolute value of the peak of the first derivative of the read signals obtained for the various test write powers. Alternatively, the first derivative data may be measured directly at the output of the disk drive first differentiator.

L.2.5 Similarly, measure the AC voltages and calculate the absolute value of the peak of the first derivative of the read signals obtained from the 2,5 MHz data contained in the preformatted sector headers.

L.2.6 The write power required for the test optical disk is that power at which the amplitude of the first derivative output signal is equal to 90 % of the amplitude of the first derivative output signal from the 2,5 MHz data in the pre-formatted headers.

Copyright International Organization for Standardization
Provided by IHS under license with ISO
No reproduction or networking permitted without license from IHS
Not for Resale

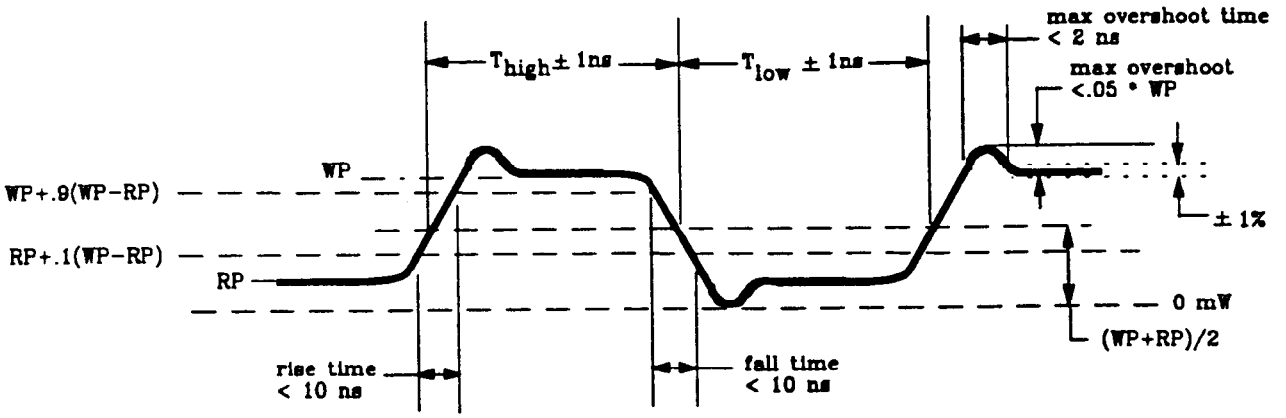

RP = Read Power
T_{nom} = Ideal time for DMM encoding at the data rate specified

WP = Write Power
T_{low} = T_{nom} - Pre-emphasis
T_{high} = T_{nom} + Pre-emphasis

Figure L.1 -- Definition of write pulse shape

Copyright International Organization for Standardization
Provided by IHS under license with ISO
No reproduction or networking permitted without license from IHS
Not for Resale

Annex M
(normative)

Read power test method

M.1 Introduction

The optical disk must be capable of withstanding the specified read power without loss of data integrity. This test method shall be used to determine conformance of the optical disk to 16.4.

M.2 Test procedure

M.2.1 Write a delay modulation mark encoded test track consisting of random data or a pseudo-random binary sequence of length 2^n-1 where $n > 9$.

M.2.2 Read the test track under nominal operating conditions to confirm that the user data recorded in the test track is error free.

M.2.3 Perform one million re-reads of the test track at 0,8 mW read power.

M.2.4 Measure the signal characteristics as described in annex K and also re-read the test track to confirm that the user data is error free.

Copyright International Organization for Standardization
Provided by IHS under license with ISO
No reproduction or networking permitted without license from IHS
Not for Resale

Annex N
(normative)

Narrow-band signal-to-noise ratio test method

N.1 Introduction

N.1.1 The narrow-band signal-to-noise ratio (NB-SNR) shall be determined by measuring the signal power (dBm) of a 5 MHz tone written at the required write power, (see annex L) with a 30 kHz resolution bandwidth and subtracting the estimated noise floor at 5 MHz.

N.1.2 The estimated noise floor shall be determined by interpolation of the noise floor in the range 4,5 MHz to 5,5 MHz.

N.1.3 It is permitted to use a spectrum analyzer with a bandwidth of 3 kHz to 100 kHz and to convert the measured value to that for a 30 kHz value.

N.2 Test Procedure

N.2.1 Write a test track in the user zone at 5,0 MHz + 0,1 MHz at the required write power as determined in annex L.

N.2.2 Measure the 5 MHz signal content (S in dBm) of the test track under the conditions given in 16.4 using a spectrum analyzer with a centre frequency of 5,0 MHz + 0,1 MHz and a resolution bandwidth of 30 kHz.

N.2.3 Interpolate the noise floor (N in dBm) in the range 4,5 MHz to 5,5 MHz and estimate the noise at 5,0 MHz.

N.2.4 Calculate the narrow-band signal-to-noise ratio (S-N in dB).

Copyright International Organization for Standardization
Provided by IHS under license with ISO
No reproduction or networking permitted without license from IHS
Not for Resale

Annex P
(normative)

Cross-talk test method

P.1 Introduction

The track-to-track cross-talk shall be determined by recording a set of three test tracks in an unformatted section of the disk at a pitch of 1,6 μm at the required write power.

P.2 Test Procedure

P.2.1 Record a series of alternating single frequency tracks at the required write power (as determined in annex N) in an unformatted section of the disk at 14,5 m/s. The alternating single frequencies are 2,5 MHz and 3,33 MHz. The track pitch is 1.6 μm. Each of the 3,33 MHz tracks is considered the "information" track and the two adjacent 2,5 MHz tracks are considered the "interference" tracks.

P.2.2 Since there can be track pitch variations as a function of angle, it is necessary to measure the 3,3 MHz carrier and the 2,5 MHz signal power using a spectrum analyzer with zero frequency span capability. With the analyzer set up for external triggering (the trigger source is once-per-rev index pulse), measure the worst case 2,5 MHz signal content and the corresponding 3,3 MHz signal content.

P.2.3 The ratio between the 3,3 MHz signal power in the centre track and the 2,5 MHz signal power from the adjacent tracks is the cross-talk level.

Copyright International Organization for Standardization
Provided by IHS under license with ISO
No reproduction or networking permitted without license from IHS
Not for Resale

Annex Q
(normative)

Radial runout test method

Q.1 Introduction

The radial runout, track-to-track pitch variability, and cumulative track pitch error shall be measured using this test method. This test method requires the implementation of a sensor which detects the position of the tracking actuator such as an interferometer or an optical, capacitive, or electromagnetic sensor. Such a system is shown in concept in figure Q.1.

Q.2 Calibration

Calibration of the sensor can be accomplished by writing two concentric tracks of known separation distance (e.g. 10 µm) in an unformatted area of the disk.

Translation of the fine tracking actuator from one track to the other can be correlated to the position sensor output.

Alternatively, if the sensitivity of the actuator deflection mechanism to input signal (e.g. microns per milliamp at DC) is known, the position sensor can be indirectly calibrated (see example below).

Example

Tracking actuator sensitivity	0,75 µm/mA
Deflection of the Actuator	10 mA
Position sensor output	75 mV
Therefore, the position sensor calibration factor	F = 75 mV/(10 mA x 0,75 µm/mA) = 10 mV/µm.

Q.3 Test Procedure

Acquire closed-loop tracking operation at the mid-point of each band.

Measure the radial runout at the output of the calibrated position sensor as a function of angular position.

Repeat on the adjacent tracks.

The difference between the radial runout of two adjacent tracks is a measure of the track-to-track pitch variability.

Cumulative track pitch error measurement requires the implementation of a high precision radial access system with which to translate the head accurately a known distance. Comparison of actual track location and intended track location gives cumulative track pitch error information.

The measurement of the cumulative inter-band and intra-band track location error shall be made in this manner, using a random seek algorithm.

Copyright International Organization for Standardization
Provided by IHS under license with ISO
No reproduction or networking permitted without license from IHS
Not for Resale

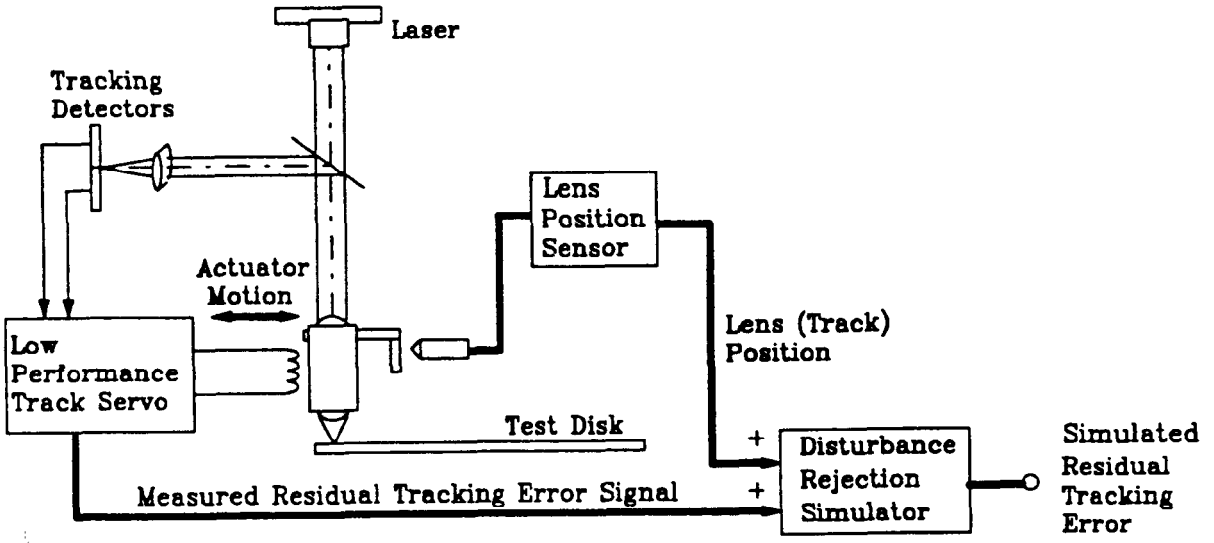

Figure Q.1 - Radial runout test method

Copyright International Organization for Standardization
Provided by IHS under license with ISO
No reproduction or networking permitted without license from IHS
Not for Resale

Annex R
(normative)

Residual tracking error signal test method

R.1 Introduction

The residual tracking error signal is the result of the tracking servo system's inability to perfectly reject disturbances. The sources of these disturbances are numerous and include radial runout, radial acceleration, vibration.

Residual tracking error shall be measured using the system shown in concept in figure R.1. The closed-loop tracking servo system shall have sufficient bandwidth so that the residual tracking error signal provides a linear, high-resolution measurement of the track position. A position sensor is used to provide a low resolution measurement of the tracking lens position, therefore also of the track. When the residual tracking error (RTE) signal is added to the lens position sensor signal, an exact measure of the position of the track is achieved. This track position signal is then processed by a digital or analog filter the disturbance rejection transfer function of which is given in the following equation. The output of the filter is a simulation of the residual tracking error produced by such a "standardized" servo system.

$$\frac{\text{RTE}}{\text{Actual deviation}} = \frac{1}{1+\dfrac{G\omega_n^2\left(1+\dfrac{s}{a}\right)}{\left(1+\dfrac{s}{b}\right)\left(s^2+2sz\omega_n+\omega_n^2\right)}}$$

where:

G = 1 000
b = 2π 5 690 rad/s
a = 2π 569 rad/s
ω_n = 2π 40 rad/s
z = ζ 0,2 typ.
s = $j2\pi f$ (Laplace Transform variable)

R.2 Test Procedure

Measure the residual tracking error in each band of the disk in keeping with the intended rotational speed at each location (786 for Band 0, 942 for Band 1 , etc.).

Copyright International Organization for Standardization
Provided by IHS under license with ISO
No reproduction or networking permitted without license from IHS
Not for Resale

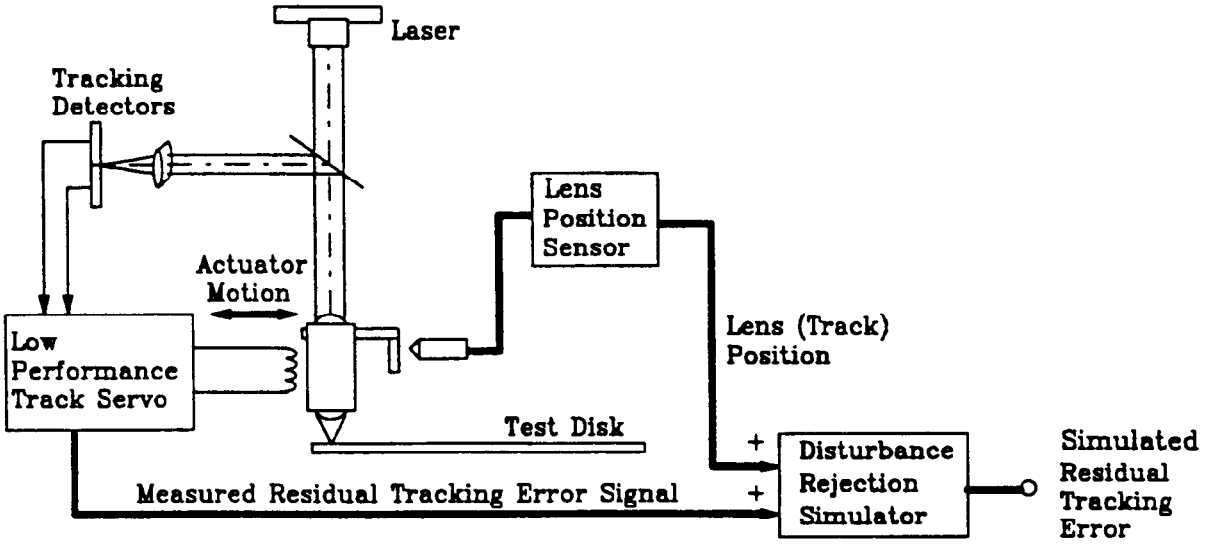

Figure R.1 - Residual tracking error signal

Copyright International Organization for Standardization
Provided by IHS under license with ISO
No reproduction or networking permitted without license from IHS
Not for Resale

UDC 681.327.68

Descriptors: data processing, information interchange, data storage devices, optical disks, optical disk cartridges, specifications, dimensions, track formats, tests.

Price based on 104 pages

Copyright International Organization for Standardization
Provided by IHS under license with ISO
No reproduction or networking permitted without license from IHS

Not for Resale