**INTERNATIONAL STANDARD ISO/IEC 10742:1994/Amd.1:1995**
TECHNICAL CORRIGENDUM 1

Published 1999-06-15

INTERNATIONAL ORGANIZATION FOR STANDARDIZATION • МЕЖДУНАРОДНАЯ ОРГАНИЗАЦИЯ ПО СТАНДАРТИЗАЦИИ • ORGANISATION INTERNATIONALE DE NORMALISATION
INTERNATIONAL ELECTROTECHNICAL COMMISSION • МЕЖДУНАРОДНАЯ ЭЛЕКТРОТЕХНИЧЕСКАЯ КОМИССИЯ • COMMISSION ÉLECTROTECHNIQUE INTERNATIONALE

# Information technology — Telecommunications and information exchange between systems — Elements of management information related to OSI Data Link Layer standards

## AMENDMENT 1: Addition of DCE conditions and new attributes

## TECHNICAL CORRIGENDUM 1

*Technologies de l'information — Télécommunications et échange d'information entre systèmes — Éléments de l'information de gestion liés aux normes de la couche de liaison de données OSI*

*AMENDEMENT 1: Addition de conditions DCE et de nouveaux attributs*

*RECTIFICATIF TECHNIQUE 1*

Technical Corrigendum 1 to International Standard ISO/IEC 10742:1994/Amd.1:1995 was prepared by Joint Technical Committee ISO/IEC JTC 1, *Information technology*, Subcommittee SC 6, *Telecommunications and information exchange between systems.*

This material is reproduced from ISO documents under International Organization for Standardization (ISO) Copyright License Number HIS/CC/1996. Not for resale. No part of these ISO documents may be reproduced in any form, electronic retrieval system or otherwise, except as allowed in the copyright law of the country of use, or with the prior written consent of ISO (Case postale 56,1211 Geneva 20, Switzerland Fax +41 22 734 10 79), IHS or the ISO Licensor's members

*Page 5*

**New Annex**

*Change* "annex E" *to* "annex J".

*Page 6*

*Change* "annex E" *to* "annex J" *and renumber clauses E.1 to E.3 as J.1 to J.3.*

**ICS 35.100.20** **Ref. No. ISO/IEC 10742:1994/Amd.1:1995/Cor.1:1999(E)**

© ISO/IEC 1999

Printed in Switzerland

Copyright International Organization for Standardization
Provided by IHS under license with ISO
No reproduction or networking permitted without license from IHS Not for Resale

STD.ISO 10742-ENGL 1994 ■ 4851903 0689368 777 ■

# INTERNATIONAL STANDARD

# ISO/IEC 10742

First edition
1994-08-01

**AMENDMENT 3**
1996-12-15

# Information technology — Telecommunications and information exchange between systems — Elements of management information related to OSI Data Link Layer standards

## AMENDMENT 3: Addition of new counter attributes

*Technologies de l'information — Télécommunications et échange d'information entre systèmes — Éléments de l'information de gestion liés aux normes de la couche de liaison de données OSI*

*AMENDEMENT 3: Addition de nouveaux contre-attributs*

**This material is reproduced from ISO documents under International Organization for Standardization (ISO) Copyright License number IHS/ICC/1996. Not for resale. No part of these ISO documents may be reproduced in any form, electronic retrieval system or otherwise, except as allowed in the copyright law of the country of use, or with the prior written consent of ISO (Case postale 56, 1211 Geneva 20, Switzerland, Fax +41 22 734 10 79), IHS or the ISO Licensor's members.**

Reference number
ISO/IEC 10742:1994/Amd.3:1996(E)

Copyright International Organization for Standardization
Provided by IHS under license with ISO
No reproduction or networking permitted without license from IHS

Not for Resale

# Foreword

ISO (the International Organization for Standardization) and IEC (the International Electrotechnical Commission) form the specialized system for worldwide standardization. National bodies that are members of ISO or IEC participate in the development of International Standards through technical committees established by the respective organization to deal with particular fields of technical activity. ISO and IEC technical committees collaborate in fields of mutual interest. Other international organizations, governmental and non-governmental, in liaison with ISO and IEC, also take part in the work.

In the field of information technology, ISO and IEC have established a joint technical committee, ISO/IEC JTC 1. Draft International Standards adopted by the joint technical committee are circulated to national bodies for voting. Publication as an International Standard requires approval by at least 75 % of the national bodies casting a vote.

Amendment 3 to International Standard ISO/IEC 10742:1994 was prepared by Joint Technical Committee ISO/IEC JTC 1, *Information technology*, Subcommittee SC 6, *Telecommunications and information exchange between systems*.

© ISO/IEC 1996

All rights reserved. Unless otherwise specified, no part of this publication may be reproduced or utilized in any form or by any means, electronic or mechanical, including photocopying and microfilm, without permission in writing from the publisher.

ISO/IEC Copyright Office • Case postale 56 • CH-1211 Genève 20 • Switzerland

Printed in Switzerland



Copyright International Organization for Standardization
Provided by IHS under license with ISO
No reproduction or networking permitted without license from IHS

Not for Resale

© ISO/IEC 

## Introduction

This Amendment to ISO/IEC 10742 adds specifications answering to requirements for Counter Attributes from ITU-T SG 7.

These new specifications came out of the comments to ISO/IEC 10742 DAM 1. They will be merged into the base document ISO/IEC 10742:1994 at the next revision.



Copyright International Organization for Standardization
Provided by IHS under license with ISO
No reproduction or networking permitted without license from IHS
Not for Resale

© ISO/IEC 

# Information technology — Telecommunications and information exchange between systems — Elements of management information related to OSI Data Link Layer standards

## AMENDMENT 3: Addition of new counter attributes

### 5.6 The LAPB Data Link Entity managed object

*Add the following attributes in the new CONDITIONAL PACKAGE* mLP-Counters-P PACKAGE:

```
"   mlpFramesReceived REPLACE-WITH-DEFAULT GET-REPLACE,
    mlpFramesSent REPLACE-WITH-DEFAULT GET-REPLACE,
    mlpFramesOutsideWindowGuard REPLACE-WITH-DEFAULT GET-REPLACE,"
```

*Add the following definitions of the new ATTRIBUTES in Attributes:*

```
" mlpFramesReceived  ATTRIBUTE
 DERIVED FROM "GMI":nonWrapping64BitCounter;
 BEHAVIOUR mlpFramesReceived-B  BEHAVIOUR
   DEFINED AS
    Counter. Total number of mlp frames received.;;
 REGISTERED AS   {DLM.aoi mlpFramesReceived(52)};

 mlpFramesSent  ATTRIBUTE
 DERIVED FROM "GMI":nonWrapping64BitCounter;
 BEHAVIOUR mlpFramesSent-B  BEHAVIOUR
   DEFINED AS
    Counter. Total number of mlp frames Sent.;;
 REGISTERED AS   {DLM.aoi mlpFramesSent(53)};

 mlpFramesOutsideWindowGuard  ATTRIBUTE
 DERIVED FROM "GMI":nonWrapping64BitCounter;
 BEHAVIOUR  mlpFramesOutsideWindowGuard-B  BEHAVIOUR
   DEFINED AS
    Counter. Total number of mlp frames outside the window guard that have been received.;;
 REGISTERED AS   {DLM.aoi mlpFramesOutsideWindowGuard(54)};"
```

### Annex A (normative) Allocation of Object Identifiers

*Add the following Object Identifiers to attribute (7)*

```
"mlpFramesReceived(52)
 mlpFramesSent(53)
 mlpFramesOutsideWindowGuard(54)"
```



Copyright International Organization for Standardization
Provided by IHS under license with ISO
No reproduction or networking permitted without license from IHS
Not for Resale

© ISO/IEC

**ICS 35.100.20**

**Descriptors:** data processing, information interchange, telecommunications, network interconnection, open systems interconnection, data link layer, management, information.

Price based on 1 page

Copyright International Organization for Standardization
Provided by IHS under license with ISO
No reproduction or networking permitted without license from IHS

Not for Resale

4851903 0667962 063

# INTERNATIONAL STANDARD

# ISO/IEC 10742

First edition
1994-08-01

**AMENDMENT 2**
1996-07-15

# Information technology — Telecommunications and information exchange between systems — Elements of management information related to OSI Data Link Layer standards

## AMENDMENT 2: Implementation conformance statement proformas

*Technologies de l'information — Télécommunications et échange d'information entre systèmes — Éléments d'information de gestion concernant les normes de la couche de liaison de données OSI*

*AMENDEMENT 2: Proformes de déclaration de conformité de mise en œuvre*

**This material is reproduced from ISO documents under International Organization for Standardization (ISO) Copyright License number IHS/ICC/1996. Not for resale. No part of these ISO documents may be reproduced in any form, electronic retrieval system or otherwise, except as allowed in the copyright law of the country of use, or with the prior written consent of ISO (Case postale 56, 1211 Geneva 20, Switzerland, Fax +41 22 734 10 79), IHS or the ISO Licensor's members.**

Reference number
ISO/IEC 10742:1994/Amd.2:1996(E)

Copyright International Organization for Standardization
Provided by IHS under license with ISO
No reproduction or networking permitted without license from IHS

Not for Resale

# Foreword

ISO (the International Organization for Standardization) and IEC (the International Electrotechnical Commission) form the specialized system for worldwide standardization. National bodies that are members of ISO or IEC participate in the development of International Standards through technical committees established by the respective organization to deal with particular fields of technical activity. ISO and IEC technical committees collaborate in fields of mutual interest. Other international organizations, governmental and non-governmental, in liaison with ISO and IEC, also take part in the work.

In the field of information technology, ISO and IEC have established a joint technical committee, ISO/IEC JTC 1. Draft International Standards adopted by the joint technical committee are circulated to national bodies for voting. Publication as an International Standard requires approval by at least 75% of the national bodies casting a vote.

Amendment 2 to International Standard ISO/IEC 10742 : 1994 was prepared by Joint Technical Committee ISO/IEC JTC 1, *Information technology*, Subcommittee SC 6, *Telecommunications and information exchange between systems.*

This Amendment is also published by ITU-T as Rec. X.282/Amd. 2 but not as identical text.

© ISO/IEC 1996

All rights reserved. Unless otherwise specified, no part of this publication may be reproduced or utilized in any form or by any means, electronic or mechanical, including photocopying and microfilm, without permission in writing from the publisher.

ISO/IEC Copyright Office • Case postale 56 • CH-1211 Genève • Switzerland

Printed in Switzerland



Copyright International Organization for Standardization
Provided by IHS under license with ISO
No reproduction or networking permitted without license from IHS

Not for Resale

4851903 0667964 936



# Information technology – Telecommunications and information exchange between systems – Elements of management information related to OSI Data Link Layer standards

## AMENDMENT 2:

## Implementation conformance statement proformas

**Page 1**

*Add the following as the last paragraph of Clause 1 "Scope".*

"

Annexes E, F, G and H, which are integral parts of this International Standard provide ICS proformas associated with Data link layer management information.

"

*Add the following reference to subclause 2.1:*

"

- ITU-T Recommendation X.724 (1993) | ISO/IEC 10165-6: 1994, *Information technology - Open Systems Interconnection - Structure of management information: Requirements and guidelines for implementation conformance statement proformas associated with OSI management*.

"

**Page 2**

*Add the following references to subclause 2.2:*

"

- CCITT Recommendation X.209 (1988), *Specification of basic encoding rules for abstract syntax notation one (ASN.1).*

  ISO/IEC 8825: 1990, *Information technology - Open Systems Interconnection - Specification of Basic Encoding Rules for Abstract Syntax Notation One (ASN.1).*

- CCITT Recommendation X.290 (1991), *OSI conformance testing methodology and framework for protocol Recommendations for CCITT applications - General concepts.*

  ISO/IEC 9646-1: 1994, *Information technology - Open Systems Interconnection - Conformance testing methodology and framework - Part 1: General concepts.*

- CCITT Recommendation X.291 (1992), *OSI conformance testing methodology and framework for protocol Recommendations for CCITT applications - Abstract test suite specification.*

  ISO/IEC 9646-2: 1994, *Information technology - Open Systems Interconnection - Conformance testing methodology and framework - Part 2: Abstract Test Suite specification.*

  NOTE – ISO/IEC 9646-1:1994 and ISO/IEC 9646-2:1994 supersede ISO/IEC 9646-1:1991 and ISO/IEC 9646-2: 1991 respectively. However, when this International Standard was under development, the previous editions were valid and this International Standard is therefore based on these editions, which are listed below.

  ISO/IEC 9646-1: 1991, *Information technology - Open Systems Interconnection - Conformance testing methodology and framework - Part 1: General concepts.*

  ISO/IEC 9646-2: 1991, *Information technology - Open Systems Interconnection - Conformance testing methodology and framework - Part 2: Abstract test suite specification.*

- ITU-T Recommendation X.296 (1995), *OSI conformance testing methodology and framework for protocol Recommendations for ITU-T applications - Implementation Conformance Statements.*



Copyright International Organization for Standardization
Provided by IHS under license with ISO
No reproduction or networking permitted without license from IHS Not for Resale

ISO/IEC 9646-7: 1995, *Information technology - Open Systems Interconnection - Conformance testing methodology and framework - Part 7: Implementation conformance statements.*

"

**Page 4**

*Add the following abbreviations to clause 4:*

"

| | |
|---|---|
| MCS | management conformance summary |
| MICS | management information conformance statement |
| MOCS | managed object conformance statement |
| MRCS | managed relationship conformance statement |

"

**Page 33**

*Replace clause 7 with the following:*

"

# 7 Conformance

Implementations claiming to conform to this International Standard shall comply with the conformance requirements as defined in the following subclauses.

## 7.1 Conformance requirements to this International Standard

### 7.1.1 Static conformance

The implementation shall conform to the requirements of this International Standard in the manager role, the agent role, or both roles. A claim of conformance to at least one role shall be made in Table E.1 of this International Standard.

If a claim of conformance is made for support in the manager role, the implementation shall support at least one management operation or notification or action of the managed objects specified by this International Standard. The conformance requirements in the manager role for those management operations, notifications and actions are identified in Table E.3 and further tables referenced by Annex E.

If a claim of conformance is made for support in the agent role, the implementation shall support one or more instances of the data link subsystem managed object class and the data link service access point managed object class identified in Table E.4 of this International Standard and further tables referenced by Annex E.

If a claim of conformance is made for support in the agent role, the implementation shall support at least one name binding identified in Table E.7 of this International Standard for each supported managed object.

The implementation shall support the transfer syntax derived from the encoding rules specified in CCITT Rec. X.209 | ISO/IEC 8825 named {joint-iso-ccitt asn1(1) basicEncoding(1)} for the abstract data types referenced by the definitions for which support is claimed.

### 7.1.2 Dynamic conformance

Implementations claiming to conform to this International Standard shall support the elements of procedure and definitions of semantics corresponding to the definitions for which support is claimed.



Copyright International Organization for Standardization
Provided by IHS under license with ISO
No reproduction or networking permitted without license from IHS Not for Resale

### 7.1.3 Management implementation conformance statement requirements

Any MCS proforma, MICS proforma, MOCS proforma, and MRCS proforma which conform to this International Standard shall be technically identical to the proformas specified in Annexes E, F, G and H preserving table numbering and the index numbers of items, and differing only in pagination and page headers.

The supplier of an implementation which is claimed to conform to this International Standard shall complete a copy of the management conformance summary (MCS) provided in Annex E as part of the conformance requirements together with any other ICS proformas referenced as applicable from that MCS. Any MCS, MICS, MOCS, and MRCS which conform to this International Standard shall:

- describe an implementation which conforms to this International Standard;
- have been completed in accordance with the instructions for completion given in ITU-T Rec. X.724 | ISO/IEC 10165-6;
- include the information necessary to uniquely identify both the supplier and the implementation.

## 7.2 Protocol specific conformance requirements

The supplier of an implementation which is claimed to conform to this International Standard shall support at least one protocol identified in Table E.2 of this International Standard.

### 7.2.1 Conformance to the ISO 7776

An implementation claming conformance to ISO/IEC 7776 in the agent role as a managed implementation shall:

a) conform to ITU-T Recommendation X.282 | ISO/IEC 10742 as defined in 7.1;

b) support the lAPBDLE MO, the sLPPM MO and sLPConnection MO.

### 7.2.2 Conformance to the ISO/IEC 8802-2 connectionless-mode LLC

An implementation claming conformance to ISO/IEC 8802-2 connectionless-mode LLC in the agent role as a managed implementation shall:

a) conform to ITU-T Recommendation X.282 | ISO/IEC 10742 as defined in 7.1;

b) support the lLCDLE MO and at least one class derived from the lLCCLPM MO.

### 7.2.3 Conformance to the ISO/IEC 8802-2 connection-mode LLC

An implementation claming conformance to ISO/IEC 8802-2 connection-mode LLC in the agent role as a managed implementation shall:

a) conform to ITU-T Recommendation X.282 | ISO/IEC 10742 as defined in 7.1;

b) support the lLCDLE MO and at least one class derived from the lLCCOPM MO.

### 7.2.4 Conformance to the ISO 8802 MAC

An implementation claming conformance to ISO 8802 MAC in the agent role as a managed implementation shall:

a) conform to ITU-T Recommendation X.282 | ISO/IEC 10742 as defined in 7.1;

b) support the mACDLE MO and at least one class derived from the mAC MO.

"

**Page 60**

*Add the following annexes after Annex D.*



Copyright International Organization for Standardization
Provided by IHS under license with ISO
No reproduction or networking permitted without license from IHS Not for Resale

# Annex E
(normative)

# MCS proforma[1)]

## E.1 Introduction

### E.1.1 Purpose and structure

The management conformance summary (MCS) is a statement by a supplier that identifies an implementation and provides information on whether the implementation claims conformance to any of the listed set of documents that specify conformance requirements to OSI management.

The MCS proforma is a document, in the form of a questionnaire that when completed by the supplier of an implementation becomes the MCS.

### E.1.2 Instructions for completing the MCS proforma to produce an MCS[2)]

The supplier of the implementation shall enter an explicit statement in each of the boxes provided. Specific instruction is provided in the text which precedes each table.

### E.1.3 Symbols, abbreviations and terms

For all annexes of this International Standard, the following common notations, defined in CCITT Rec. X.291 | ISO/IEC 9646-2 and ITU-T Rec. X.296 | ISO/IEC 9646-7 are used for the Status column:

m mandatory;

o optional;

c conditional;

x prohibited;

— not applicable or out of scope.

NOTES

1 – 'c', 'm', and 'o' are prefixed by a 'c:' when nested under a conditional or optional item of the same table;

2 – 'o' may be suffixed by '.N' (where N is a unique number) for mutually exclusive or selectable options among a set of status values. Support of at least one of the choices (from the items with the same values of N) is required.

For all annexes of this International Standard, the following common notations, defined in CCITT Rec. X.291 | ISO/IEC 9646-2 and ITU-T Rec. X.296 | ISO/IEC 9646-7 are used for the Support column:

Y implemented;

N not implemented;

— no answer required;

Ig the item is ignored (i.e. processed syntactically but not semantically).

---

[1)] Users of this International Standard may freely reproduce the MCS proforma in this annex so that it can be used for its intended purpose, and may further publish the completed MCS.

[2)] Instructions for completing the MCS proforma are specified in ITU-T Rec.X.724 | ISO/IEC 10165-6 .



Copyright International Organization for Standardization
Provided by IHS under license with ISO
No reproduction or networking permitted without license from IHS Not for Resale

## E.2 Identification of the implementation

### E.2.1 Date of statement

The supplier of the implementation shall enter the date of this statement in the box below. Use the format DD-MM-YYYY.

| Date of statement |
|---|
| |

### E.2.2 Identification of the implementation

The supplier of the implementation shall enter information necessary to uniquely identify the implementation and the system(s) in which it may reside, in the box below.

| |
|---|
| |

### E.2.3 Contact

The supplier of the implementation shall provide information on whom to contact if there are any queries concerning the content of the MCS, in the box below.

| |
|---|
| |

## E.3 Identification of the International Standard in which the management information is defined

The supplier of the implementation shall enter the title, reference number and date of the publication of the International Standard which specifies the management information to which conformance is claimed, in the box below.

| International Standard to which conformance is claimed |
|---|
| |

### E.3.1 Technical corrigenda implemented

The supplier of the implementation shall enter the reference numbers of implemented technical corrigenda which modify the identified International Standard, in the box below.

| |
|---|
| |



Copyright International Organization for Standardization
Provided by IHS under license with ISO
No reproduction or networking permitted without license from IHS Not for Resale

### E.3.2 Amendments implemented

The supplier of the implementation shall state the titles and reference numbers of implemented amendments to the identified International Standard, in the box below.

| |
|---|
| |

## E.4 Management conformance summary

The supplier of implementation shall state the capabilities and features supported and provide summary of conformance claims to Recommendations | International Standards using the tables in this annex.

The supplier of the implementation shall specify the roles that are supported, in Table E.1

**Table E.1 – Roles**

| Index | Roles supported | Status | Support | Additional information |
|---|---|---|---|---|
| 1 | Manager role support | o.1 | | |
| 2 | Agent role support | o.1 | | |

The supplier of the implementation shall specify the protocols that are supported, in Table E.2

**Table E.2 – Protocol**

| Index | Protocol supported | Status | Support | Additional information |
|---|---|---|---|---|
| 1 | ISO 7776 support | o.2 | | |
| 2 | ISO 8802-2 (CL mode) support | o.2 | | |
| 3 | ISO 8802-2 (CO mode) support | o.2 | | |
| 4 | ISO/IEC 8802 MAC support | c1 | | |

c1: if E.2/2a or E.2/3a then m else -

The supplier of the implementation shall specify support for management information in the manager role, in Table E.3.

**Table E.3 – Manager role minimum conformance requirement**

| | Item | Status | Support | Additional information |
|---|---|---|---|---|
| 1 | Operations on managed objects | c1 | | |
| 2 | Attribute value change notification for EWMA metric monitor managed object | c1 | | |
| 3 | Object creation notification for EWMA metric monitor managed object | c1 | | |
| 4 | Object deletion notification for EWMA metric monitor managed object | c1 | | |
| 5 | Quality of service alarm notification for EWMA metric monitor managed object | c1 | | |
| 6 | State change notification for EWMA metric monitor managed object | c1 | | |
| 7 | Object creation notification for LAPB data link entity managed object | c2 | | |
| 8 | Object deletion notification for LAPB data link entity managed object | c2 | | |
| 9 | State change notification for LAPB data link entity managed object | c2 | | |
| 10 | Object creation notification for LLC data link entity managed object | c3 | | |
| 11 | Object deletion notification for LLC data link entity managed object | c3 | | |
| 12 | State change notification for LLC data link entity managed object | c3 | | |
| 13 | Object creation notification for MAC data link entity managed object | c4 | | |
| 14 | Object deletion notification for MAC data link entity managed object | c4 | | |
| 15 | State change notification for MAC data link entity managed object | c4 | | |
| 16 | Deactivate action for SLP connection managed object | c2 | | |
| 17 | Communications alarm notification for SLP connection managed object | c2 | | |
| 18 | Object creation notification for SLP connection managed object | c2 | | |
| 19 | Object deletion notification for SLP connection managed object | c2 | | |
| 20 | Object creation notification for SLP connection IV managed object | c2 | | |



Copyright International Organization for Standardization
Provided by IHS under license with ISO
No reproduction or networking permitted without license from IHS Not for Resale

**Table E.3 (concluded) – Manager role minimum conformance requirement**

| | Item | Status | Support | Additional information |
|---|---|---|---|---|
| 21 | Object deletion notification for SLP connection IV managed object | c2 | | |
| 22 | Activate action for SLP protocol machine managed object | c2 | | |
| 23 | Deactivate action for SLP protocol machine managed object | c2 | | |
| 24 | Object creation notification for SLP protocol managed object | c2 | | |
| 25 | Object deletion notification for SLP protocol managed object | c2 | | |
| 26 | State change notification for SLP protocol machine managed object | c2 | | |

c1: if E.1/1a then o.3 else -

c2: if E.1/1a and E.2/1a then o.3 else -

c3: if E.1/1a and (E.2/2a or E.2/3a) then o.3 else -

c4: if E.1/1a and E.2/4a then o.3 else -

The supplier of the implementation shall specify support for management information in the agent role, in Table E.4

**Table E.4 – Agent role minimum conformance requirement**

| Index | Item | Status | Support | Additional information |
|---|---|---|---|---|
| 1 | Data link subsystem managed object | m | | |
| 2 | Data link service access point managed object | m | | |
| 3 | LAPB data link entity managed object | c5 | | |
| 4 | LAPB single link protocol machine managed object | c5 | | |
| 5 | LAPB single link protocol connection managed object | c5 | | |
| 6 | LAPB single link protocol connection initial values managed object | c6 | | |
| 7 | MAC data link entity managed object | c7 | | |
| 8 | MAC managed object | c8 | | |
| 9 | LLC data link managed object | c9 | | |
| 10 | LLC connectionless protocol machine managed object | c10 | | |
| 11 | LLC connection-mode protocol machine managed object | c11 | | |

c5: if E.1/2a and E.2/1a then m else -

c6: if E.1/2a and E.2/1a then o else -

c7: if E.1/2a and E.2/4a then m else -

c8: if E.1/2a and E.2/4a then o else -

c9: if E.1/2a and E2/2a or G.2/3a then m else -

c10: if E.1/2a and E.2/2a then o else -

c11: if E.1/2a and E.2/3a then o else -

**Table E.5 – Logging of event records**

| Index | | Status | Support | Additional information |
|---|---|---|---|---|
| 1 | Does the implementation support logging of event records in agent role? | c12 | | |

c12: if E.1/2a then o else -

NOTE – Conformance to this International Standard does not require conformance to CCITT Rec. X.735 | ISO/IEC 10164-6.

The supplier of the implementation shall provide information on claims of conformance to any of the International Standards summarized in the following tables. For each International Standard that the supplier of the implementation claims conformance to, the corresponding conformance statement(s) shall be completed, or referenced by, the MCS. The supplier of the implementation shall complete the Support, Table numbers and Additional information columns.



Copyright International Organization for Standardization
Provided by IHS under license with ISO
No reproduction or networking permitted without license from IHS Not for Resale

In tables E.6, E.7 and E.8, the Status column is used to indicate whether the supplier of the implementation is required to complete the referenced tables or referenced items. Conformance requirements are as specified in the referenced tables or referenced items and are not changed by the value of the MCS Status column. Similarly, the Support column is used by the supplier of the implementation to indicate completion of the referenced tables or referenced items.

**Table E.6 – MOCS support summary**

| index | Identification of the document that includes the MOCS proforma | Table numbers of MOCS proforma | Description | Constraints and values | Status | Support | Table numbers of MOCS | Additional information |
|---|---|---|---|---|---|---|---|---|
| 1 | "ISO/IEC 10742" | G.1 - G.4 | dLSAP | — | m | | | |
| 2 | "ISO/IEC 10742" | G.5 - G.8 | datalinkSubsystem | — | m | | | |
| 3 | "ISO/IEC 10742" | G.9 - G.14 | eWMAMetricMonitor | — | o | | | |
| 4 | "ISO/IEC 10742" | G.15 - G.20 | iAPBDLE | — | c13 | | | |
| 5 | "ISO/IEC 10742" | G.21 | iLCCLPM | — | c14 | | | |
| 6 | "ISO/IEC 10742" | G.22 | iLCCOPM | — | c15 | | | |
| 7 | "ISO/IEC 10742" | G.23 - G.28 | iLCDLE | — | c16 | | | |
| 8 | "ISO/IEC 10742" | G.29 | mAC | — | c17 | | | |
| 9 | "ISO/IEC 10742" | G.30 - G.35 | mACDLE | — | c18 | | | |
| 10 | "ISO/IEC 10742" | G.36 - G.39 | resourceTypeId | — | o | | | |
| 11 | "ISO/IEC 10742" | G.40 - G.47 | sLPConnection | — | c19 | | | |
| 12 | "ISO/IEC 10742" | G.48 - G.53 | sLPConnectionIVMO | — | c20 | | | |
| 13 | "ISO/IEC 10742" | G.54 - G.60 | sLPPM | — | c21 | | | |
| 14 | "ISO/IEC 10164-1" | Table C.1 - C.4 | objectCreationRecord | — | c22 | | | |
| 15 | "ISO/IEC 10164-1" | Table C.5 - C.8 | objectDeletionRecord | — | c22 | | | |
| 16 | "ISO/IEC 10164-1" | Table C.9 - C.12 | attributeValueChangeRecord | — | c23 | | | |
| 17 | "ISO/IEC 10164-2" | Table C.1 - C.4 | stateChangeRecord | — | c24 | | | |
| 18 | "ISO/IEC 10164-4" | Table C.1 - C.4 | alarmRecord | — | c25 | | | |

c13: if E.4/3a then m else -

c14: if E.4/10a then m else -

c15: if E.4/11a then m else -

c16: if E.4/9a then m else -

c17: if E.4/8a then m else -

c18: if E.4/7a then m else -

c19: if E.4/5a then m else -

c20: if E.4/6a then m else -

c21: if E.4/4a then m else -

c22: if E.6/4a or E.6/5a or E.6/6a or E.6/7a or E.6/8a or E.6/9a or E.6/11a or E.6/12a or E.6/13a then m else -

c23: if E.6/4a then m else -

c24: if E.6/4a or E.6/5a or E.6/6a or E.6/7a or E.6/8a or E.6/9a or E.6/13a then m else -

c25: if E.6/4a or E.6/11a then m else -



Copyright International Organization for Standardization
Provided by IHS under license with ISO
No reproduction or networking permitted without license from IHS Not for Resale

**Table E.7 – MRCS support summary**

| Index | Identification of the document that includes the MRCS proforma | Table numbers of MRCS proforma | Description | Constraints and values | Status | Support | Table numbers of MRCS | Additional information |
|---|---|---|---|---|---|---|---|---|
| 1 | "ISO/IEC 10742" | Table H.1/1 | dLSAP-datalinkEntity-Management | — | o.4 | | | |
| 2 | "ISO/IEC 10742" | Table H.1/2 | "CCITT Rec. X.723 (1993) \| ISO/IEC 10165-5 : 1993": sap1-communicationsEntity | — | o.4 | | | |
| 3 | "ISO/IEC 10742" | Table H.1/3 | datalinkEntity-datalinkSubsystem-Management | — | o.5 | | | |
| 4 | "ISO/IEC 10742" | Table H.1/4 | "CCITT Rec. X.723 (1993) \| ISO/IEC 10165-5 : 1993": communicationsEntity-subsystem | — | o.5 | | | |
| 5 | "ISO/IEC 10742" | Table H.1/5 | "CCITT Rec. X.723 (1993) \| ISO/IEC 10165-5 : 1993": subsystem-system | — | m | | | |
| 6 | "ISO/IEC 10742" | Table H.1/6 | eWMAMetricMonitor-ILCDLE-Management | — | c26 | | | |
| 7 | "ISO/IEC 10742" | Table H.1/7 | eWMAMetricMonitor-mACDLE-Management | — | c26 | | | |
| 8 | "ISO/IEC 10742" | Table H.1/8 | ILCCLPM-ILCDLE-Management | — | c27 | | | |
| 9 | "ISO/IEC 10742" | Table H.1/9 | "CCITT Rec. X.723 (1993) \| ISO/IEC 10165-5 : 1993": clProtocolMachine-entity | — | c27 | | | |
| 10 | "ISO/IEC 10742" | Table H.1/10 | ILCCOPM-ILCDLE-Management | — | c28 | | | |
| 11 | "ISO/IEC 10742" | Table H.1/11 | "CCITT Rec. X.723 (1993) \| ISO/IEC 10165-5 : 1993": coProtocolMachine-entity | — | c29 | | | |
| 12 | "ISO/IEC 10742" | Table H.1/12 | mAC-mACDLE-Automatic | — | c30 | | | |
| 13 | "ISO/IEC 10742" | Table H.1/13 | mAC-mACDLE-Management | — | c30 | | | |
| 14 | "ISO/IEC 10742" | Table H.1/14 | resourceTypeId-ILCDLE-Automatic | — | c31 | | | |
| 15 | "ISO/IEC 10742" | Table H.1/15 | resourceTypeId-mACDLE-Automatic | — | c31 | | | |
| 16 | "ISO/IEC 10742" | Table H.1/16 | sLPConnection-sLPPM-Automatic | — | c32 | | | |
| 17 | "ISO/IEC 10742" | Table H.1/17 | sLPConnection-sLPPM-Management | — | c32 | | | |
| 18 | "ISO/IEC 10742" | Table H.1/18 | "CCITT Rec. X.723 (1993) \| ISO/IEC 10165-5 : 1993": singlePeerConnection-coProtocolMachine | — | c32 | | | |
| 19 | "ISO/IEC 10742" | Table H.1/19 | sLPConnectionIVMO-sLPPM-Management | — | c33 | | | |
| 20 | "ISO/IEC 10742" | Table H.1/20 | sLPPM-IAPBDLE-Management | — | c34 | | | |
| 21 | "ISO/IEC 10164-6" | Table D.1/1 | logRecord-log | — | c35 | | | |

c26: if E.6/3a then o.6 else -

c27: if E.6/4a then o.7 else -

c28: if E.6/5a then o.9 else -

c29: if E.6/6a then o.9, if E.6/13a then o.10, if E.6/6a and E.6/13a then o.9 and o.10 else -

c30: if E.6/8a then o.11 else -

c31: if E.6/10a then o.12 else -

c32: if E.6/11a then o.13 else -

c33: if E.6/12a then m else -

c34: if E.6/13a then o.10 else -

c35: if E.6/14a or E.6/15a or E.6/16a or E.6/17a or E.6/18a then m else -



Copyright International Organization for Standardization
Provided by IHS under license with ISO
No reproduction or networking permitted without license from IHS Not for Resale

**Table E.8 – MICS support summary**

| Index | Identification of the document that includes the MICS proforma | Table numbers of MICS proforma | Description | Constraints and values | Status | Support | Table numbers of MICS | Additional information |
|---|---|---|---|---|---|---|---|---|
| 1 | "ISO/IEC 10742" | Table F.1 to F.23 | management operations | — | c36 | | | |
| 2 | "ISO/IEC 10742" | Table F.24 | notifications | — | c37 | | | |
| 3 | "ISO/IEC 10742" | Table F.25 | actions | — | c38 | | | |

c36: if E.3/1a then m else -

c37: if E.3/2a or E.3/3a or E.3/4a or E.3/5a or E.3/6a or E.3/7a or E.3/8a or E.3/9a or E.3/10a or E.3/11a or E.3/12a or E.3/13a or E.3/14a E.3/15 or E.3/17a or E.3/18a or E.3/19a or E.3/20a or E.3/21a or E.3/24a or E.3/25a or E.3/26a then m else -

c38: if E.3/16a or E.3/22a or E.3/23a then m else -



Copyright International Organization for Standardization
Provided by IHS under license with ISO
No reproduction or networking permitted without license from IHS Not for Resale

# Annex F
(normative)

# MICS proforma[1)]

## F.1 Introduction

The purpose of this MICS proforma is to provide a mechanism for a supplier of an implementation which claims conformance, in the manager role, to management information specified in this International Standard, to provide conformance information in a standard form.

## F.2 Instructions for completing the MICS proforma to produce a MICS

The MICS proforma contained in this annex is comprised of information in tabular form, in accordance with ITU-T Rec. X.724 | ISO/IEC 10165-6. In addition to the general guidance given in ITU-T Rec. X.724 | ISO/IEC 10165-6. The supplier of the implementation shall state which items are supported in tables below and if necessary, provide additional information.

## F.3 Symbols, abbreviations and terms

The MICS proforma contained in this Annex is comprised of information in tabular form, in accordance with CCITT Rec. X.291 | ISO/IEC 9646-2.

The notations used in the Status and Support columns are specified in F.1.3.

## F.4 Statement of conformance to the management information

### F.4.1 Attributes

The specifier of a manager role implementation that claims to support management operations on the attributes specified in this International Standard shall import a copy of the following tables and complete them.

#### F.4.1.1 The Data Link Service Access Point managed object

**Table F.1 – dLSAP Attribute support**

| | | | | Set by create | | Get | | Replace | | Add | | Remove | | Set to default | | |
|---|---|---|---|---|---|---|---|---|---|---|---|---|---|---|---|---|
| Index | Attribute template label | Value of object identifier for attribute | Constraints and values | Status | Support | Status | Support | Status | Support | Status | Support | Status | Support | Status | Support | Additional information |
| 1 | "Rec. X.721 \| ISO/IEC 10165-2 : 1992": allomorphs | {2 9 3 2 7 50} | SET OF ObjectClass | c1 | | o.14 | | - | | - | | - | | - | | |
| 2 | "Rec. X.721 \| ISO/IEC 10165-2 : 1992": nameBinding | {2 9 3 2 7 63} | OBJECT IDENTIFIER | c1 | | o.14 | | - | | - | | - | | - | | |
| 3 | "Rec. X.721 \| ISO/IEC 10165-2 : 1992": objectClass | {2 9 3 2 7 65} | ObjectClass | c1 | | o.14 | | - | | - | | - | | - | | |
| 4 | "Rec. X.721 \| ISO/IEC 10165-2 : 1992": packages | {2 9 3 2 7 66} | SET OF OBJECT IDENTIFIER | c1 | | o.14 | | - | | - | | - | | - | | |

[1)] Users of this International Standard may freely reproduce the PICS proforma in this Annex so that it can be used for its intended purpose, and may further publish the completed PICS.



Copyright International Organization for Standardization
Provided by IHS under license with ISO
No reproduction or networking permitted without license from IHS Not for Resale

**Table F.1 (concluded) – dLSAP Attribute support**

| | | | | Set by create | | Get | | Replace | | Add | | Remove | | Set to default | | |
|---|---|---|---|---|---|---|---|---|---|---|---|---|---|---|---|---|
| Index | Attribute template label | Value of object identifier for attribute | Constraints and values | Status | Support | Status | Support | Status | Support | Status | Support | Status | Support | Status | Support | Additional information |
| 5 | "CCITT Rec. X.723 (1993) \| ISO/IEC 10165-5 : 1993": sap1Address | {2 9 3 5 7 8} | INTEGER | - | | o.14 | | - | | - | | - | | - | | |
| 6 | "CCITT Rec. X.723 (1993) \| ISO/IEC 10165-5 : 1993": sapId | {2 9 3 5 7 10} | GraphicString | c1 | | o.14 | | - | | - | | - | | - | | |
| 7 | "CCITT Rec. X.723 (1993) \| ISO/IEC 10165-5 : 1993": userEntityNames | {2 9 3 5 7 15} | SET OF ObjectInstance | - | | o.14 | | - | | - | | - | | - | | |

c1: if F.17/1a then o.14 else -

## F.4.1.2 The Data Link Subsystem managed object

**Table F.2 – datalinkSubsystem Attribute support**

| | | | | Set by create | | Get | | Replace | | Add | | Remove | | Set to default | | |
|---|---|---|---|---|---|---|---|---|---|---|---|---|---|---|---|---|
| Index | Attribute template label | Value of object identifier for attribute | Constraints and values | Status | Support | Status | Support | Status | Support | Status | Support | Status | Support | Status | Support | Additional information |
| 1 | "Rec. X.721 \| ISO/IEC 10165-2 : 1992": allomorphs | {2 9 3 2 7 50} | SET OF ObjectClass | - | | o.14 | | - | | - | | - | | - | | |
| 2 | "Rec. X.721 \| ISO/IEC 10165-2 : 1992": nameBinding | {2 9 3 2 7 63} | OBJECT IDENTIFIER | - | | o.14 | | - | | - | | - | | - | | |
| 3 | "Rec. X.721 \| ISO/IEC 10165-2 : 1992": objectClass | {2 9 3 2 7 65} | ObjectClass | - | | o.14 | | - | | - | | - | | - | | |
| 4 | "Rec. X.721 \| ISO/IEC 10165-2 : 1992": packages | {2 9 3 2 7 66} | SET OF OBJECT IDENTIFIER | - | | o.14 | | - | | - | | - | | - | | |
| 5 | "CCITT Rec. X.723 (1993) \| ISO/IEC 10165-5 : 1993": subsystemId | {2 9 3 5 7 11} | GraphicString | - | | o.14 | | - | | - | | - | | - | | |

## F.4.1.3 The EWMA Metric Monitor managed object

**Table F.3 – eWMAMetricMonitor Attribute support**

| | | | | Set by create | | Get | | Replace | | Add | | Remove | | Set to default | | |
|---|---|---|---|---|---|---|---|---|---|---|---|---|---|---|---|---|
| Index | Attribute template label | Value of object identifier for attribute | Constraints and values | Status | Support | Status | Support | Status | Support | Status | Support | Status | Support | Status | Support | Additional information |
| 1 | "Rec. X.721 \| ISO/IEC 10165-2 : 1992": administrativeState | {2 9 3 2 7 31} | ENUMERATED | o.14 | | o.14 | | o.14 | | - | | - | | - | | |
| 2 | "Rec. X.721 \| ISO/IEC 10165-2 : 1992": allomorphs | {2 9 3 2 7 50} | SET OF ObjectClass | o.14 | | o.14 | | - | | - | | - | | - | | |
| 3 | counterModulus | {1 2 840 10011 7 5} | INTEGER | - | | o.14 | | o.14 | | - | | - | | - | | |
| 4 | counterTMinusGP | {1 2 840 10011 7 4} | INTEGER | - | | o.14 | | o.14 | | - | | - | | - | | |



Copyright International Organization for Standardization
Provided by IHS under license with ISO
No reproduction or networking permitted without license from IHS Not for Resale

**Table F.3 (concluded) – eWMAMetricMonitor Attribute support**

| | | | | Set by create | | Get | | Replace | | Add | | Remove | | Set to default | | |
|---|---|---|---|---|---|---|---|---|---|---|---|---|---|---|---|---|
| Index | Attribute template label | Value of object identifier for attribute | Constraints and values | Status | Support | Status | Support | Status | Support | Status | Support | Status | Support | Status | Support | Additional information |
| 5 | derivedGauge | {1 2 840 10011 7 6} | CHOICE derivedGaugeNotCurrent | o.14 | | o.14 | | o.14 | | - | | - | | - | | |
| 6 | estimateOfMean | {1 2 840 10011 7 7} | CHOICE | o.14 | | o.14 | | o.14 | | - | | - | | - | | |
| 7 | granularityPeriod | {1 2 840 10011 7 8} | CHOICE | o.14 | | o.14 | | o.14 | | - | | - | | - | | |
| 8 | movingTimePeriod | {1 2 840 10011 7 12} | CHOICE | o.14 | | o.14 | | o.14 | | - | | - | | - | | |
| 9 | "Rec. X.721 \| ISO/IEC 10165-2 : 1992": nameBinding | {2 9 3 2 7 63} | OBJECT IDENTIFIER | o.14 | | o.14 | | - | | - | | - | | - | | |
| 10 | "Rec. X.721 \| ISO/IEC 10165-2 : 1992": objectClass | {2 9 3 2 7 65} | ObjectClass | o.14 | | o.14 | | - | | - | | - | | - | | |
| 11 | observedAttributeId | {1 2 840 10011 7 9} | AttributeId | o.14 | | o.14 | | o.14 | | - | | - | | - | | |
| 12 | observedManagedObjectInstance | {1 2 840 10011 7 10} | ObjectInstance | o.14 | | o.14 | | o.14 | | - | | - | | - | | |
| 13 | "Rec. X.721 \| ISO/IEC 10165-2 : 1992": operationalState | {2 9 3 2 7 35} | ENUMERATED | - | | o.14 | | - | | - | | - | | - | | |
| 14 | "Rec. X.721 \| ISO/IEC 10165-2 : 1992": packages | {2 9 3 2 7 66} | SET OF OBJECT IDENTIFIER | o.14 | | o.14 | | - | | - | | - | | - | | |
| 15 | scannerId | {1 2 840 10011 7 3} | GraphicString | o.14 | | o.14 | | - | | - | | - | | - | | |
| 16 | severityIndicatingThreshold | {1 2 840 10011 7 11} | SET OF SEQUENCE | o.14 | | o.14 | | o.14 | | o.14 | | o.14 | | - | | |

## F.4.1.4 The LAPB Data Link Entity managed object

**Table F.4 – IAPBDLE Attribute support**

| | | | | Set by create | | Get | | Replace | | Add | | Remove | | Set to default | | |
|---|---|---|---|---|---|---|---|---|---|---|---|---|---|---|---|---|
| Index | Attribute template label | Value of object identifier for attribute | Constraints and values | Status | Support | Status | Support | Status | Support | Status | Support | Status | Support | Status | Support | Additional information |
| 1 | "Rec. X.721 \| ISO/IEC 10165-2 : 1992": allomorphs | {2 9 3 2 7 50} | SET OF ObjectClass | c2 | | o.14 | | - | | - | | - | | - | | |
| 2 | "CCITT Rec. X.723 (1993) \| ISO/IEC 10165-5 : 1993": communicationsEntityId | {2 9 3 5 7 0} | GraphicString | c2 | | o.14 | | - | | - | | - | | - | | |
| 3 | "CCITT Rec. X.723 (1993) \| ISO/IEC 10165-5 : 1993": localSapNames | {2 9 3 5 7 6} | SET OF ObjectInstance | - | | o.14 | | - | | - | | - | | - | | |
| 4 | mT1Timer | {2 15 0 7 12} | SEQUENCE | c2 | | o.14 | | o.14 | | - | | - | | o.14 | | |
| 5 | mT2Timer | {2 15 0 7 13} | SEQUENCE | c2 | | o.14 | | o.14 | | - | | - | | o.14 | | |
| 6 | mT3Timer | {2 15 0 7 14} | SEQUENCE | c2 | | o.14 | | o.14 | | - | | - | | o.14 | | |
| 7 | "Rec. X.721 \| ISO/IEC 10165-2 : 1992": nameBinding | {2 9 3 2 7 63} | OBJECT IDENTIFIER | c2 | | o.14 | | - | | - | | - | | - | | |
| 8 | "Rec. X.721 \| ISO/IEC 10165-2 : 1992": objectClass | {2 9 3 2 7 65} | ObjectClass | c2 | | o.14 | | - | | - | | - | | - | | |
| 9 | "Rec. X.721 \| ISO/IEC 10165-2 : 1992": operationalState | {2 9 3 2 7 35} | ENUMERATED | - | | o.14 | | - | | - | | - | | - | | |



Copyright International Organization for Standardization
Provided by IHS under license with ISO
No reproduction or networking permitted without license from IHS
Not for Resale

**Table F.4 (concluded) – IAPBDLE Attribute support**

| | | | | Set by create | | Get | | Replace | | Add | | Remove | | Set to default | | |
|---|---|---|---|---|---|---|---|---|---|---|---|---|---|---|---|---|
| Index | Attribute template label | Value of object identifier for attribute | Constraints and values | Status | Support | Status | Support | Status | Support | Status | Support | Status | Support | Status | Support | Additional information |
| 10 | "Rec. X.721 \| ISO/IEC 10165-2 : 1992": packages | {2 9 3 2 7 66} | SET OF OBJECT IDENTIFIER | c2 | | o.14 | | - | | - | | - | | - | | |
| 11 | providerEntityNames | {2 15 0 7 11} | SET OF ObjectInstance | c2 | | o.14 | | o.14 | | - | | - | | o.14 | | |

c2: if F.19/1a then o.14 else -

### F.4.1.5 The LLC Data Link Entity managed object

**Table F.5 – ILCDLE Attribute support**

| | | | | Set by create | | Get | | Replace | | Add | | Remove | | Set to default | | |
|---|---|---|---|---|---|---|---|---|---|---|---|---|---|---|---|---|
| Index | Attribute template label | Value of object identifier for attribute | Constraints and values | Status | Support | Status | Support | Status | Support | Status | Support | Status | Support | Status | Support | Additional information |
| 1 | "Rec. X.721 \| ISO/IEC 10165-2 : 1992": allomorphs | {2 9 3 2 7 50} | SET OF ObjectClass | c3 | | o.14 | | - | | - | | - | | - | | |
| 2 | "CCITT Rec. X.723 (1993) \| ISO/IEC 10165-5 : 1993": communicationsEntityId | {2 9 3 5 7 0} | GraphicString | c3 | | o.14 | | - | | - | | - | | - | | |
| 3 | "CCITT Rec. X.723 (1993) \| ISO/IEC 10165-5 : 1993": localSapNames | {2 9 3 5 7 6} | SET OF ObjectInstance | - | | o.14 | | - | | - | | - | | - | | |
| 4 | "Rec. X.721 \| ISO/IEC 10165-2 : 1992": nameBinding | {2 9 3 2 7 63} | OBJECT IDENTIFIER | c3 | | o.14 | | - | | - | | - | | - | | |
| 5 | "Rec. X.721 \| ISO/IEC 10165-2 : 1992": objectClass | {2 9 3 2 7 65} | ObjectClass | c3 | | o.14 | | - | | - | | - | | - | | |
| 6 | "Rec. X.721 \| ISO/IEC 10165-2 : 1992": operationalState | {2 9 3 2 7 35} | ENUMERATED | - | | o.14 | | - | | - | | - | | - | | |
| 7 | "Rec. X.721 \| ISO/IEC 10165-2 : 1992": packages | {2 9 3 2 7 66} | SET OF OBJECT IDENTIFIER | c3 | | o.14 | | - | | - | | - | | - | | |
| 8 | providerEntityNames | {2 15 0 7 11} | SET OF ObjectInstance | c3 | | o.14 | | o.14 | | - | | - | | o.14 | | |

c3: if F.20/1a then o.14 else -



Copyright International Organization for Standardization
Provided by IHS under license with ISO
No reproduction or networking permitted without license from IHS
Not for Resale

### F.4.1.6 The MAC Data Link Entity managed object

**Table F.6 – mACDLE Attribute support**

| | | | | Set by create | | Get | | Replace | | Add | | Remove | | Set to default | | |
|---|---|---|---|---|---|---|---|---|---|---|---|---|---|---|---|---|
| Index | Attribute template label | Value of object identifier for attribute | Constraints and values | Status | Support | Status | Support | Status | Support | Status | Support | Status | Support | Status | Support | Additional information |
| 1 | "Rec. X.721 \| ISO/IEC 10165-2 : 1992": allomorphs | {2 9 3 2 7 50} | SET OF ObjectClass | c4 | | o.14 | | - | | - | | - | | - | | |
| 2 | "CCITT Rec. X.723 (1993) \| ISO/IEC 10165-5 : 1993": communicationsEntityId | {2 9 3 5 7 0} | GraphicString | c4 | | o.14 | | - | | - | | - | | - | | |
| 3 | "CCITT Rec. X.723 (1993) \| ISO/IEC 10165-5 : 1993": localSapNames | {2 9 3 5 7 6} | SET OF ObjectInstance | - | | o.14 | | - | | - | | - | | - | | |
| 4 | "Rec. X.721 \| ISO/IEC 10165-2 : 1992": nameBinding | {2 9 3 2 7 63} | OBJECT IDENTIFIER | c4 | | o.14 | | - | | - | | - | | - | | |
| 5 | "Rec. X.721 \| ISO/IEC 10165-2 : 1992": objectClass | {2 9 3 2 7 65} | ObjectClass | c4 | | o.14 | | - | | - | | - | | - | | |
| 6 | "Rec. X.721 \| ISO/IEC 10165-2 : 1992": operationalState | {2 9 3 2 7 35} | ENUMERATED | - | | o.14 | | - | | - | | - | | - | | |
| 7 | "Rec. X.721 \| ISO/IEC 10165-2 : 1992": packages | {2 9 3 2 7 66} | SET OF OBJECT IDENTIFIER | c4 | | o.14 | | - | | - | | - | | - | | |
| 8 | providerEntityNames | {2 15 0 7 11} | SET OF ObjectInstance | c4 | | o.14 | | o.14 | | - | | - | | o.14 | | |

c4: if F.21/1a then o.14 else -

### F.4.1.7 The Resource TypeId managed object

**Table F.7 – resourceTypeId Attribute support**

| | | | | Set by create | | Get | | Replace | | Add | | Remove | | Set to default | | |
|---|---|---|---|---|---|---|---|---|---|---|---|---|---|---|---|---|
| Index | Attribute template label | Value of object identifier for attribute | Constraints and values | Status | Support | Status | Support | Status | Support | Status | Support | Status | Support | Status | Support | Additional information |
| 1 | "Rec. X.721 \| ISO/IEC 10165-2 : 1992": allomorphs | {2 9 3 2 7 50} | SET OF ObjectClass | - | | o.14 | | - | | - | | - | | - | | |
| 2 | "Rec. X.721 \| ISO/IEC 10165-2 : 1992": nameBinding | {2 9 3 2 7 63} | OBJECT IDENTIFIER | - | | o.14 | | - | | - | | - | | - | | |
| 3 | "Rec. X.721 \| ISO/IEC 10165-2 : 1992": objectClass | {2 9 3 2 7 65} | ObjectClass | - | | o.14 | | - | | - | | - | | - | | |
| 4 | "Rec. X.721 \| ISO/IEC 10165-2 : 1992": packages | {2 9 3 2 7 66} | SET OF OBJECT IDENTIFIER | - | | o.14 | | - | | - | | - | | - | | |
| 5 | resourceInfo | {1 2 840 10011 7 2} | SEQUENCE | - | | o.14 | | - | | - | | - | | - | | |
| 6 | resourceTypeIdName | {1 2 840 10011 7 1} | GraphicString | - | | o.14 | | - | | - | | - | | - | | |



Copyright International Organization for Standardization
Provided by IHS under license with ISO
No reproduction or networking permitted without license from IHS Not for Resale

## F.4.1.8 The LAPB Single Link Protocol Connection managed object

**Table F.8 – sLPConnection Attribute support**

| | | | | Set by create | | Get | | Replace | | Add | | Remove | | Set to default | | |
|---|---|---|---|---|---|---|---|---|---|---|---|---|---|---|---|---|
| Index | Attribute template label | Value of object identifier for attribute | Constraints and values | Status | Support | Status | Support | Status | Support | Status | Support | Status | Support | Status | Support | Additional information |
| 1 | "Rec. X.721 \| ISO/IEC 10165-2 : 1992": allomorphs | {2 9 3 2 7 50} | SET OF ObjectClass | - | | o.14 | | - | | - | | - | | - | | |
| 2 | "CCITT Rec. X.723 (1993) \| ISO/IEC 10165-5 : 1993": connectionId | {2 9 3 5 7 1} | GraphicString | - | | o.14 | | - | | - | | - | | - | | |
| 3 | fCSErrorsReceived | {2 15 0 7 15} | INTEGER | - | | o.14 | | - | | - | | - | | - | | |
| 4 | fRMRsReceived | {2 15 0 7 1} | INTEGER | - | | o.14 | | - | | - | | - | | - | | |
| 5 | fRMRsSent | {2 15 0 7 2} | INTEGER | - | | o.14 | | - | | - | | - | | - | | |
| 6 | iFrameDataOctetsReceived | {2 15 0 7 16} | INTEGER | - | | o.14 | | - | | - | | - | | - | | |
| 7 | iFrameDataOctetsSent | {2 15 0 7 17} | INTEGER | - | | o.14 | | - | | - | | - | | - | | |
| 8 | iFramesReceived | {2 15 0 7 3} | INTEGER | - | | o.14 | | - | | - | | - | | - | | |
| 9 | iFramesSent | {2 15 0 7 4} | INTEGER | - | | o.14 | | - | | - | | - | | - | | |
| 10 | interfaceType | {2 15 0 7 18} | ENUMERATED | - | | o.14 | | o.14 | | - | | - | | o.14 | | |
| 11 | k | {2 15 0 7 19} | CHOICE | - | | o.14 | | o.14 | | - | | - | | o.14 | | |
| 12 | n1 | {2 15 0 7 20} | INTEGER | - | | o.14 | | o.14 | | - | | - | | o.14 | | |
| 13 | n2 | {2 15 0 7 21} | INTEGER | - | | o.14 | | o.14 | | - | | - | | o.14 | | |
| 14 | "Rec. X.721 \| ISO/IEC 10165-2 : 1992": nameBinding | {2 9 3 2 7 63} | OBJECT IDENTIFIER | - | | o.14 | | - | | - | | - | | - | | |
| 15 | "Rec. X.721 \| ISO/IEC 10165-2 : 1992": objectClass | {2 9 3 2 7 65} | ObjectClass | - | | o.14 | | - | | - | | - | | - | | |
| 16 | "Rec. X.721 \| ISO/IEC 10165-2 : 1992": packages | {2 9 3 2 7 66} | SET OF OBJECT IDENTIFIER | - | | o.14 | | - | | - | | - | | - | | |
| 17 | pollsReceived | {2 15 0 7 22} | INTEGER | - | | o.14 | | - | | - | | - | | - | | |
| 18 | rEJsReceived | {2 15 0 7 5} | INTEGER | - | | o.14 | | - | | - | | - | | - | | |
| 19 | rEJsSent | {2 15 0 7 6} | INTEGER | - | | o.14 | | - | | - | | - | | - | | |
| 20 | rNRsReceived | {2 15 0 7 7} | INTEGER | - | | o.14 | | - | | - | | - | | - | | |
| 21 | rNRsSent | {2 15 0 7 8} | INTEGER | - | | o.14 | | - | | - | | - | | - | | |
| 22 | sABMsReceived | {2 15 0 7 9} | INTEGER | - | | o.14 | | - | | - | | - | | - | | |
| 23 | sABMsSent | {2 15 0 7 10} | INTEGER | - | | o.14 | | - | | - | | - | | - | | |
| 24 | sLPProtocolState | {2 15 0 7 23} | ENUMERATED | - | | o.14 | | - | | - | | - | | - | | |
| 25 | sequenceModulus | {2 15 0 7 24} | INTEGER | - | | o.14 | | o.14 | | - | | - | | o.14 | | |
| 26 | "CCITT Rec. X.723 (1993) \| ISO/IEC 10165-5 : 1993": supportedConnectionNames | {2 9 3 5 7 12} | SET OF ObjectInstance | - | | o.14 | | - | | - | | - | | - | | |
| 27 | t1Timer | {2 15 0 7 25} | SEQUENCE | - | | o.14 | | o.14 | | - | | - | | o.14 | | |
| 28 | t2Timer | {2 15 0 7 26} | SEQUENCE | - | | o.14 | | o.14 | | - | | - | | o.14 | | |
| 29 | t3Timer | {2 15 0 7 27} | SEQUENCE | - | | o.14 | | o.14 | | - | | - | | o.14 | | |
| 30 | t4Timer | {2 15 0 7 28} | SEQUENCE | - | | o.14 | | o.14 | | - | | - | | o.14 | | |
| 31 | timesT1Expired | {2 15 0 7 29} | INTEGER | - | | o.14 | | - | | - | | - | | - | | |
| 32 | timesT3Expired | {2 15 0 7 30} | INTEGER | - | | o.14 | | o.14 | | - | | - | | o.14 | | |
| 33 | "CCITT Rec. X.723 (1993) \| ISO/IEC 10165-5 : 1993": underlyingConnectionNames | {2 9 3 5 7 14} | SET OF ObjectInstance | - | | o.14 | | - | | - | | - | | - | | |



Copyright International Organization for Standardization
Provided by IHS under license with ISO
No reproduction or networking permitted without license from IHS

Not for Resale

## F.4.1.9 The LAPB Single Link Protocol Connection Initial Values managed object

**Table F.9 – sLPConnectionIVMO Attribute support**

| | | | | Set by create | | Get | | Replace | | Add | | Remove | | Set to default | | |
|---|---|---|---|---|---|---|---|---|---|---|---|---|---|---|---|---|
| Index | Attribute template label | Value of object identifier for attribute | Constraints and values | Status | Support | Status | Support | Status | Support | Status | Support | Status | Support | Status | Support | Additional information |
| 1 | "Rec. X.721 \| ISO/IEC 10165-2 : 1992": allomorphs | {2 9 3 2 7 50} | SET OF ObjectClass | o.14 | | o.14 | | - | | - | | - | | - | | |
| 2 | interfaceType | {2 15 0 7 18} | ENUMERATED | o.14 | | o.14 | | o.14 | | - | | - | | o.14 | | |
| 3 | k | {2 15 0 7 19} | CHOICE | o.14 | | o.14 | | o.14 | | - | | - | | o.14 | | |
| 4 | n1 | {2 15 0 7 20} | INTEGER | o.14 | | o.14 | | o.14 | | - | | - | | o.14 | | |
| 5 | n2 | {2 15 0 7 21} | INTEGER | o.14 | | o.14 | | o.14 | | - | | - | | o.14 | | |
| 6 | "Rec. X.721 \| ISO/IEC 10165-2 : 1992": nameBinding | {2 9 3 2 7 63} | OBJECT IDENTIFIER | o.14 | | o.14 | | - | | - | | - | | - | | |
| 7 | "Rec. X.721 \| ISO/IEC 10165-2 : 1992": objectClass | {2 9 3 2 7 65} | ObjectClass | o.14 | | o.14 | | - | | - | | - | | - | | |
| 8 | "Rec. X.721 \| ISO/IEC 10165-2 : 1992": packages | {2 9 3 2 7 66} | SET OF OBJECT IDENTIFIER | o.14 | | o.14 | | - | | - | | - | | - | | |
| 9 | sLPConnectionIVMOId | {2 15 0 7 31} | GraphicString | o.14 | | o.14 | | - | | - | | - | | - | | |
| 10 | sequenceModulus | {2 15 0 7 24} | INTEGER | o.14 | | o.14 | | o.14 | | - | | - | | o.14 | | |
| 11 | t1Timer | {2 15 0 7 25} | SEQUENCE | o.14 | | o.14 | | o.14 | | - | | - | | o.14 | | |
| 12 | t2Timer | {2 15 0 7 26} | SEQUENCE | o.14 | | o.14 | | o.14 | | - | | - | | o.14 | | |
| 13 | t3Timer | {2 15 0 7 27} | SEQUENCE | o.14 | | o.14 | | o.14 | | - | | - | | o.14 | | |
| 14 | t4Timer | {2 15 0 7 28} | SEQUENCE | o.14 | | o.14 | | o.14 | | - | | - | | o.14 | | |

## F.4.1.10 The LAPB Single Link Protocol Machine managed object

**Table F.10 – sLPPM Attribute support**

| | | | | Set by create | | Get | | Replace | | Add | | Remove | | Set to default | | |
|---|---|---|---|---|---|---|---|---|---|---|---|---|---|---|---|---|
| Index | Attribute template label | Value of object identifier for attribute | Constraints and values | Status | Support | Status | Support | Status | Support | Status | Support | Status | Support | Status | Support | Additional information |
| 1 | "Rec. X.721 \| ISO/IEC 10165-2 : 1992": allomorphs | {2 9 3 2 7 50} | SET OF ObjectClass | c5 | | o.14 | | - | | - | | - | | - | | |
| 2 | "CCITT Rec. X.723 (1993) \| ISO/IEC 10165-5 : 1993": coProtocolMachineId | {2 9 3 5 7 3} | GraphicString | c5 | | o.14 | | - | | - | | - | | - | | |
| 3 | "Rec. X.721 \| ISO/IEC 10165-2 : 1992": nameBinding | {2 9 3 2 7 63} | OBJECT IDENTIFIER | c5 | | o.14 | | - | | - | | - | | - | | |
| 4 | "Rec. X.721 \| ISO/IEC 10165-2 : 1992": objectClass | {2 9 3 2 7 65} | ObjectClass | c5 | | o.14 | | - | | - | | - | | - | | |
| 5 | "Rec. X.721 \| ISO/IEC 10165-2 : 1992": operationalState | {2 9 3 2 7 35} | ENUMERATED | - | | o.14 | | - | | - | | - | | - | | |
| 6 | "Rec. X.721 \| ISO/IEC 10165-2 : 1992": packages | {2 9 3 2 7 66} | SET OF OBJECT IDENTIFIER | c5 | | o.14 | | - | | - | | - | | - | | |

c5: if F.23/1a then o.14 else -



Copyright International Organization for Standardization
Provided by IHS under license with ISO
No reproduction or networking permitted without license from IHS Not for Resale

## F.4.2 Attribute groups

The specifier of a manager role implementation that claims to support management operations on the attribute groups specified in this International Standard shall import a copy of the following tables and complete them.

### F.4.2.1 The LAPB Data Link Entity managed object

**Table F.11 – lAPBDLE Attribute group support**

| | | | | Get | | Set to default | | |
|---|---|---|---|---|---|---|---|---|
| Index | Attribute group template label | Value of object identifier for attribute group | Constraints and values | Status | Support | Status | Support | Additional information |
| 1 | "Rec. X.721 \| ISO/IEC 10165-2 : 1992": state | {2 9 3 2 8 1} | "Rec. X.721 \| ISO/IEC 10165-2 : 1992": operationalState | o.14 | | - | | |
| 2 | timers | {2 15 0 8 1} | mT1Timer<br>mT2Timer<br>mT3Timer | o.14 | | o.14 | | |

### F.4.2.2 The LLC Data Link Entity managed object

**Table F.12 – lLCDLE Attribute group support**

| | | | | Get | | Set to default | | |
|---|---|---|---|---|---|---|---|---|
| Index | Attribute group template label | Value of object identifier for attribute group | Constraints and values | Status | Support | Status | Support | Additional information |
| 1 | "Rec. X.721 \| ISO/IEC 10165-2 : 1992": state | {2 9 3 2 8 1} | "Rec. X.721 \| ISO/IEC 10165-2 : 1992": operationalState | o.14 | | - | | |

### F.4.2.3 The MAC Data Link Entity managed object

**Table F.13 – mACDLE Attribute group support**

| | | | | Get | | Set to default | | |
|---|---|---|---|---|---|---|---|---|
| Index | Attribute group template label | Value of object identifier for attribute group | Constraints and values | Status | Support | Status | Support | Additional information |
| 1 | "Rec. X.721 \| ISO/IEC 10165-2 : 1992": state | {2 9 3 2 8 1} | "Rec. X.721 \| ISO/IEC 10165-2 : 1992": operationalState | o.14 | | - | | |



Copyright International Organization for Standardization
Provided by IHS under license with ISO
No reproduction or networking permitted without license from IHS
Not for Resale

### F.4.2.4 The LAPB Single Link Protocol Connection managed object

**Table F.14 – sLPConnection Attribute group support**

| Index | Attribute group template label | Value of object identifier for attribute group | Constraints and values | Get | | Set to default | | Additional information |
|---|---|---|---|---|---|---|---|---|
| | | | | Status | Support | Status | Support | |
| 1 | "CCITT Rec. X.723 (1993) \| ISO/IEC 10165-5 : 1993" counters | {2 9 3 5 8 0} | fCSErrorsReceived<br>fRMRsReceived<br>fRMRsSent<br>iFrameDataOctetsReceived<br>iFrameDataOctetsSent<br>iFramesReceived<br>iFramesSent<br>pollsReceived<br>rEJsReceived<br>rEJsSent<br>rNRsReceived<br>rNRsSent<br>sABMsReceived<br>sABMsSent<br>timesT1Expired<br>timerT3Expired (condition) | o.14 | | - | | |
| 2 | "Rec. X.721 \| ISO/IEC 10165-2 : 1992": state | {2 9 3 2 8 1} | sLPProtocolState | o.14 | | - | | |
| 3 | timers | {2 15 0 8 1} | t1Timer<br>t2Timer<br>t4Timer<br>t3Timer (condition) | o.14 | | o.14 | | |

### F.4.2.5 The LAPB Single Link Protocol Connection Initial Values managed object

**Table F.15 – sLPConnectionIVMO Attribute group support**

| Index | Attribute group template label | Value of object identifier for attribute group | Constraints and values | Get | | Set to default | | Additional information |
|---|---|---|---|---|---|---|---|---|
| | | | | Status | Support | Status | Support | |
| 1 | timers | {2 15 0 8 1} | t1Timer<br>t2Timer<br>t4Timer<br>t3Timer (condition) | o.14 | | o.14 | | |

### F.4.2.6 The LAPB Single Link Protocol Machine managed object

**Table F.16 – sLPPM Attribute group support**

| Index | Attribute group template label | Value of object identifier for attribute group | Constraints and values | Get | | Set to default | | Additional information |
|---|---|---|---|---|---|---|---|---|
| | | | | Status | Support | Status | Support | |
| 1 | "Rec. X.721 \| ISO/IEC 10165-2 : 1992": state | {2 9 3 2 8 1} | "Rec. X.721 \| ISO/IEC 10165-2 : 1992": operationalState | o.14 | | - | | |



Copyright International Organization for Standardization
Provided by IHS under license with ISO
No reproduction or networking permitted without license from IHS Not for Resale

### F.4.3 Create and delete management operations

The specifier of a manager role implementation that claims to support the create or delete management operations on the managed objects specified in this International Standard shall import a copy of the following tables and complete them.

#### F.4.3.1 The Data Link Service Access Point managed object

**Table F.17 — Create and delete support**

| Index | Operation | Constraints and values | Status | Support | Additional information |
|---|---|---|---|---|---|
| 1 | Create support | dLSAP MO | o | | |
| 1.1 | Create with reference object | — | — | | |
| 2 | Delete support | dLSAP MO | o | | |

#### F.4.3.2 The EWMA Metric Monitor managed object

**Table F.18 — Create and delete support**

| Index | Operation | Constraints and values | Status | Support | Additional information |
|---|---|---|---|---|---|
| 1 | Create support | eWMAMetricMonitor MO | o.14 | | |
| 1.1 | Create with reference object | — | — | | |
| 2 | Delete support | eWMAMetricMonitor MO | o.14 | | |

#### F.4.3.3 The LAPB Data Link Entity managed object

**Table F.19 — Create and delete support**

| Index | Operation | Constraints and values | Status | Support | Additional information |
|---|---|---|---|---|---|
| 1 | Create support | lAPBDLE MO | o | | |
| 1.1 | Create with reference object | — | — | | |
| 2 | Delete support | lAPBDLE MO | o | | |

#### F.4.3.4 The LLC Data Link Entity managed object

**Table F.20 — Create and delete support**

| Index | Operation | Constraints and values | Status | Support | Additional information |
|---|---|---|---|---|---|
| 1 | Create support | lLCDLE MO | o | | |
| 1.1 | Create with reference object | — | — | | |
| 2 | Delete support | lLCDLE MO | o | | |

#### F.4.3.5 The MAC Data Link Entity managed object

**Table F.21 — Create and delete support**

| Index | Operation | Constraints and values | Status | Support | Additional information |
|---|---|---|---|---|---|
| 1 | Create support | mACDLE MO | o | | |
| 1.1 | Create with reference object | — | — | | |
| 2 | Delete support | mACDLE MO | o | | |



Copyright International Organization for Standardization
Provided by IHS under license with ISO
No reproduction or networking permitted without license from IHS Not for Resale

### F.4.3.6 The LAPB Single Link Protocol Connection Initial Values managed object

**Table F.22 — Create and delete support**

| Index | Operation | Constraints and values | Status | Support | Additional information |
|---|---|---|---|---|---|
| 1 | Create support | sLPConnectionIVMO | o.14 | | |
| 1.1 | Create with reference object | — | — | | |
| 2 | Delete support | sLPConnectionIVMO | o.14 | | |

### F.4.3.7 The LAPB Single Link Protocol Machine managed object

**Table F.23 — Create and delete support**

| Index | Operation | Constraints and values | Status | Support | Additional information |
|---|---|---|---|---|---|
| 1 | Create support | sLPPM MO | o | | |
| 1.1 | Create with reference object | — | — | | |
| 2 | Delete support | sLPPM MO | o | | |

## F.4.4 Notifications

The specifier of a manager role implementation that claims to support the notifications specified in this International Standard shall import a copy of this table and complete it.

**Table F.24 – Notification support**

| | | | | | Support | | | | | | | | | | |
|---|---|---|---|---|---|---|---|---|---|---|---|---|---|---|---|
| Index | Notification type template label | Value of object identifier for notification type | Constraints and values | Status | Confirmed | Nonconfirmed | Additional information | Subindex | Notification field name label | Value of object identifier of attribute type associated with field | Constraints and values | Status | Support | Additional information |
| 1 | "Rec. X.721 \| ISO/IEC 10165-2 : 1992": attributeValueChange | {2 9 3 2 10 1} | - | c6 | | | | 1.1 | AttributeValueChangeInfo | - | **Information Syntax** SEQUENCE | c6 | | |
| | | | | | | | | 1.1.1 | sourceIndicator | {2 9 3 2 7 26} | ENUMERATED | c:m | | |
| | | | | | | | | 1.1.2 | attributeIdentifierList | {2 9 3 2 7 8} | SET OF AttributeId | c:m | | |
| | | | | | | | | 1.1.3 | attributeValueChangeDefinition | {2 9 3 2 7 10} | SET OF SEQUENCE | c:m | | |
| | | | | | | | | 1.1.3.1 | attributeID | - | AttributeId | c:m | | |
| | | | | | | | | 1.1.3.2 | oldAttributeValue | - | ANY DEFINED BY attributeID | c:m | | |
| | | | | | | | | 1.1.3.3 | newAttributeValue | - | ANY DEFINED BY attributeID | c:m | | |
| | | | | | | | | 1.1.4 | notificationIdentifier | {2 9 3 2 7 16} | INTEGER | c:m | | |
| | | | | | | | | 1.1.5 | correlatedNotifications | {2 9 3 2 7 12} | SET OF SEQUENCE | c:m | | |
| | | | | | | | | 1.1.5.1 | correlatedNotifications | {2 9 3 2 7 12} | SET OF INTEGER | c:m | | |
| | | | | | | | | 1.1.5.2 | sourceObjectInst | - | ObjectInstance | c:m | | |
| | | | | | | | | 1.1.6 | additionalText | {2 9 3 2 7 7} | GraphicString | c:m | | |
| | | | | | | | | 1.1.7 | additionalInformation | {2 9 3 2 7 6} | SET OF SEQUENCE | c:m | | |
| | | | | | | | | 1.1.7.1 | identifier | - | OBJECT IDENTIFIER | c:m | | |
| | | | | | | | | 1.1.7.2 | significance | - | BOOLEAN | c:m | | |
| | | | | | | | | 1.1.7.3 | information | - | ANY DEFINED BY identifier | c:m | | |



Copyright International Organization for Standardization
Provided by IHS under license with ISO
No reproduction or networking permitted without license from IHS
Not for Resale

**Table F.24 (continued) – Notification support**

| Index | Notification type template label | Value of object identifier for notification type | Constraints and values | Status | Support: Confirmed | Support: Nonconfirmed | Additional information | Subindex | Notification field name label | Value of object identifier of attribute type associated with field | Constraints and values | Status | Support | Additional information |
|---|---|---|---|---|---|---|---|---|---|---|---|---|---|---|
| 2 | "Rec. X.721 \| ISO/IEC 10165-2 : 1992": objectCreation | {2 9 3 2 10 6} | - | c7 | | | | 2.1 | ObjectInfo | - | **Information Syntax** SEQUENCE | c7 | | |
| | | | | | | | | 2.1.1 | sourceIndicator | {2 9 3 2 7 26} | ENUMERATED | c:m | | |
| | | | | | | | | 2.1.2 | attributeList | {2 9 3 2 7 9} | SET OF Attribute | c:m | | |
| | | | | | | | | 2.1.3 | notificationIdentifier | {2 9 3 2 7 16} | INTEGER | c:m | | |
| | | | | | | | | 2.1.4 | correlatedNotifications | {2 9 3 2 7 12} | SET OF SEQUENCE | c:m | | |
| | | | | | | | | 2.1.4.1 | correlatedNotifications | {2 9 3 2 7 12} | SET OF INTEGER | c:m | | |
| | | | | | | | | 2.1.4.2 | sourceObjectInst | - | ObjectInstance | c:m | | |
| | | | | | | | | 2.1.5 | additionalText | {2 9 3 2 7 7} | GraphicString | c:m | | |
| | | | | | | | | 2.1.6 | additionalInformation | {2 9 3 2 7 6} | SET OF SEQUENCE | c:m | | |
| | | | | | | | | 2.1.6.1 | identifier | - | OBJECT IDENTIFIER | c:m | | |
| | | | | | | | | 2.1.6.2 | significance | - | BOOLEAN | c:m | | |
| | | | | | | | | 2.1.6.3 | information | - | ANY DEFINED BY identifier | c:m | | |
| 3 | "Rec. X.721 \| ISO/IEC 10165-2 : 1992": objectDeletion | {2 9 3 2 10 7} | - | c8 | | | | 3.1 | ObjectInfo | - | **Information Syntax** SEQUENCE | c8 | | |
| | | | | | | | | 3.1.1 | sourceIndicator | {2 9 3 2 7 26} | ENUMERATED | c:m | | |
| | | | | | | | | 3.1.2 | attributeList | {2 9 3 2 7 9} | SET OF Attribute | c:m | | |
| | | | | | | | | 3.1.3 | notificationIdentifier | {2 9 3 2 7 16} | INTEGER | c:m | | |
| | | | | | | | | 3.1.4 | correlatedNotifications | {2 9 3 2 7 12} | SET OF SEQUENCE | c:m | | |
| | | | | | | | | 3.1.4.1 | correlatedNotifications | {2 9 3 2 7 12} | SET OF INTEGER | c:m | | |
| | | | | | | | | 3.1.4.2 | sourceObjectInst | - | ObjectInstance | c:m | | |
| | | | | | | | | 3.1.5 | additionalText | {2 9 3 2 7 7} | GraphicString | c:m | | |
| | | | | | | | | 3.1.6 | additionalInformation | {2 9 3 2 7 6} | SET OF SEQUENCE | c:m | | |
| | | | | | | | | 3.1.6.1 | identifier | - | OBJECT IDENTIFIER | c:m | | |
| | | | | | | | | 3.1.6.2 | significance | - | BOOLEAN | c:m | | |
| | | | | | | | | 3.1.6.3 | information | - | ANY DEFINED BY identifier | c:m | | |
| 4 | "Rec. X.721 \| ISO/IEC 10165-2 : 1992": qualityofServiceAlarm | {2 9 3 2 10 11} | - | c9 | | | | 4.1 | AlarmInfo | - | **Information Syntax** SEQUENCE | c9 | | |
| | | | | | | | | 4.1.1 | probableCause | {2 9 3 2 7 18} | CHOICE | c:m | | |
| | | | | | | | | 4.1.1.1 | globalValue | - | OBJECT IDENTIFIER | c:m | | |
| | | | | | | | | 4.1.1.2 | localValue | - | INTEGER | c:m | | |
| | | | | | | | | 4.1.2 | specificProblems | {2 9 3 2 7 27} | SET OF CHOICE | c:m | | |
| | | | | | | | | 4.1.2.1 | OBJECT IDENTIFIER | - | OBJECT IDENTIFIER | c:m | | |
| | | | | | | | | 4.1.2.2 | INTEGER | - | INTEGER | c:m | | |
| | | | | | | | | 4.1.3 | perceivedSeverity | {2 9 3 2 7 17} | ENUMERATED | c:m | | |
| | | | | | | | | 4.1.4 | backedUpStatus | {2 9 3 2 7 11} | BOOLEAN | c:m | | |



Copyright International Organization for Standardization
Provided by IHS under license with ISO
No reproduction or networking permitted without license from IHS
Not for Resale

**Table F.24 (continued) – Notification support**

| Index | Notification type template label | Value of object identifier for notification type | Constraints and values | Status | Support: Confirmed | Support: Nonconfirmed | Additional information | Subindex | Notification field name label | Value of object identifier of attribute type associated with field | Constraints and values | Status | Support | Additional information |
|---|---|---|---|---|---|---|---|---|---|---|---|---|---|---|
| | | | | | | | | 4.1.5 | backUpObject | {2 9 3 2 7 40} | ObjectInstance | c:m | | |
| | | | | | | | | 4.1.6 | trendIndication | {2 9 3 2 7 30} | ENUMERATED | c:m | | |
| | | | | | | | | 4.1.7 | thresholdInfo | {2 9 3 2 7 29} | SEQUENCE | c:m | | |
| | | | | | | | | 4.1.7.1 | triggeredThreshold | - | AttributeId | c:m | | |
| | | | | | | | | 4.1.7.2 | observedValue | - | CHOICE | c:m | | |
| | | | | | | | | 4.1.7.2.1 | integer | - | INTEGER | c:m | | |
| | | | | | | | | 4.1.7.2.2 | real | - | REAL | c:m | | |
| | | | | | | | | 4.1.7.3 | thresholdLevel | - | CHOICE | c:m | | |
| | | | | | | | | 4.1.7.3.1 | up | - | SEQUENCE | c:m | | |
| | | | | | | | | 4.1.7.3.1.1 | high | - | CHOICE | c:m | | |
| | | | | | | | | 4.1.7.3.1.1.1 | integer | - | INTEGER | c:m | | |
| | | | | | | | | 4.1.7.3.1.1.2 | real | - | REAL | c:m | | |
| | | | | | | | | 4.1.7.3.1.2 | low | - | CHOICE | c:m | | |
| | | | | | | | | 4.1.7.3.1.2.1 | integer | - | INTEGER | c:m | | |
| | | | | | | | | 4.1.7.3.1.2.2 | real | - | REAL | c:m | | |
| | | | | | | | | 4.1.7.3.2 | down | - | SEQUENCE | c:m | | |
| | | | | | | | | 4.1.7.3.2.1 | high | - | CHOICE | c:m | | |
| | | | | | | | | 4.1.7.3.2.1.1 | integer | - | INTEGER | c:m | | |
| | | | | | | | | 4.1.7.3.2.1.2 | real | - | REAL | c:m | | |
| | | | | | | | | 4.1.7.3.2.2 | low | - | CHOICE | c:m | | |
| | | | | | | | | 4.1.7.3.2.2.1 | integer | - | INTEGER | c:m | | |
| | | | | | | | | 4.1.7.3.2.2.2 | real | - | REAL | c:m | | |
| | | | | | | | | 4.1.7.4 | armTime | - | GeneralizedTime | c:m | | |
| | | | | | | | | 4.1.8 | notificationIdentifier | {2 9 3 2 7 16} | INTEGER | c:m | | |
| | | | | | | | | 4.1.9 | correlatedNotifications | {2 9 3 2 7 12} | SET OF SEQUENCE | c:m | | |
| | | | | | | | | 4.1.9.1 | correlatedNotifications | {2 9 3 2 7 12} | SET OF INTEGER | c:m | | |
| | | | | | | | | 4.1.9.2 | sourceObjectInst | - | ObjectInstance | c:m | | |
| | | | | | | | | 4.1.10 | stateChangeDefinition | {2 9 3 2 7 28} | SET OF SEQUENCE | c:m | | |
| | | | | | | | | 4.1.10.1 | attributeID | - | AttributeId | c:m | | |
| | | | | | | | | 4.1.10.2 | oldAttributeValue | - | ANY DEFINED BY attributeID | c:m | | |
| | | | | | | | | 4.1.10.3 | newAttributeValue | - | ANY DEFINED BY attributeID | c:m | | |
| | | | | | | | | 4.1.11 | monitoredAttributes | {2 9 3 2 7 15} | SET OF Attribute | c:m | | |
| | | | | | | | | 4.1.12 | proposedRepairActions | {2 9 3 2 7 19} | SET OF CHOICE | c:m | | |
| | | | | | | | | 4.1.12.1 | OBJECT IDENTIFIER | - | OBJECT IDENTIFIER | c:m | | |
| | | | | | | | | 4.1.12.2 | INTEGER | - | INTEGER | c:m | | |
| | | | | | | | | 4.1.13 | additionalText | {2 9 3 2 7 7} | GraphicString | c:m | | |
| | | | | | | | | 4.1.14 | additionalInformation | {2 9 3 2 7 6} | SET OF SEQUENCE | c:m | | |
| | | | | | | | | 4.1.14.1 | identifier | - | OBJECT IDENTIFIER | c:m | | |
| | | | | | | | | 4.1.14.2 | significance | - | BOOLEAN | c:m | | |



Copyright International Organization for Standardization
Provided by IHS under license with ISO
No reproduction or networking permitted without license from IHS
Not for Resale

**Table F.24 (continued) – Notification support**

| Index | Notification type template label | Value of object identifier for notification type | Constraints and values | Status | Support: Confirmed | Support: Nonconfirmed | Additional information | Subindex | Notification field name label | Value of object identifier of attribute type associated with field | Constraints and values | Status | Support | Additional information |
|---|---|---|---|---|---|---|---|---|---|---|---|---|---|---|
| | | | | | | | | 4.1.14.3 | information | - | ANY DEFINED BY *identifier* | c:m | | |
| 5 | "Rec. X.721 \| ISO/IEC 10165-2 : 1992": communicationsAlarm | {2 9 3 2 10 2} | - | c10 | | | | 5.1 | AlarmInfo | - | **Information Syntax** SEQUENCE | c10 | | |
| | | | | | | | | 5.1.1 | probableCause | {2 9 3 2 7 18} | CHOICE | c:m | | |
| | | | | | | | | 5.1.1.1 | globalValue | - | OBJECT IDENTIFIER | c:m | | |
| | | | | | | | | 5.1.1.2 | localValue | - | INTEGER | c:m | | |
| | | | | | | | | 5.1.2 | specificProblems | {2 9 3 2 7 27} | SET OF CHOICE | c:m | | |
| | | | | | | | | 5.1.2.1 | OBJECT IDENTIFIER | - | OBJECT IDENTIFIER | c:m | | |
| | | | | | | | | 5.1.2.2 | INTEGER | - | INTEGER | c:m | | |
| | | | | | | | | 5.1.3 | perceivedSeverity | {2 9 3 2 7 17} | ENUMERATED | c:m | | |
| | | | | | | | | 5.1.4 | backedUpStatus | {2 9 3 2 7 11} | BOOLEAN | c:m | | |
| | | | | | | | | 5.1.5 | backUpObject | {2 9 3 2 7 40} | ObjectInstance | c:m | | |
| | | | | | | | | 5.1.6 | trendIndication | {2 9 3 2 7 30} | ENUMERATED | c:m | | |
| | | | | | | | | 5.1.7 | thresholdInfo | {2 9 3 2 7 29} | SEQUENCE | c:m | | |
| | | | | | | | | 5.1.7.1 | triggeredThreshold | - | AttributeId | c:m | | |
| | | | | | | | | 5.1.7.2 | *observedValue* | - | CHOICE | c:m | | |
| | | | | | | | | 5.1.7.2.1 | integer | - | INTEGER | c:m | | |
| | | | | | | | | 5.1.7.2.2 | real | - | REAL | c:m | | |
| | | | | | | | | 5.1.7.3 | thresholdLevel | - | CHOICE | c:m | | |
| | | | | | | | | 5.1.7.3.1 | up | - | SEQUENCE | c:m | | |
| | | | | | | | | 5.1.7.3.1.1 | high | - | CHOICE | c:m | | |
| | | | | | | | | 5.1.7.3.1.1.1 | integer | - | INTEGER | c:m | | |
| | | | | | | | | 5.1.7.3.1.1.2 | real | - | REAL | c:m | | |
| | | | | | | | | 5.1.7.3.1.2 | low | - | CHOICE | c:m | | |
| | | | | | | | | 5.1.7.3.1.2.1 | integer | - | INTEGER | c:m | | |
| | | | | | | | | 5.1.7.3.1.2.2 | real | - | REAL | c:m | | |
| | | | | | | | | 5.1.7.3.2 | down | - | SEQUENCE | c:m | | |
| | | | | | | | | 5.1.7.3.2.1 | high | - | CHOICE | c:m | | |
| | | | | | | | | 5.1.7.3.2.1.1 | integer | - | INTEGER | c:m | | |
| | | | | | | | | 5.1.7.3.2.1.2 | real | - | REAL | c:m | | |
| | | | | | | | | 5.1.7.3.2.2 | low | - | CHOICE | c:m | | |
| | | | | | | | | 5.1.7.3.2.2.1 | integer | - | INTEGER | c:m | | |
| | | | | | | | | 5.1.7.3.2.2.2 | real | - | REAL | c:m | | |
| | | | | | | | | 5.1.7.4 | armTime | - | GeneralizedTime | c:m | | |
| | | | | | | | | 5.1.8 | notificationIdentifier | {2 9 3 2 7 16} | INTEGER | c:m | | |
| | | | | | | | | 5.1.9 | correlatedNotifications | {2 9 3 2 7 12} | SET OF SEQUENCE | c:m | | |
| | | | | | | | | 5.1.9.1 | correlatedNotifications | {2 9 3 2 7 12} | SET OF INTEGER | c:m | | |
| | | | | | | | | 5.1.9.2 | sourceObjectInst | - | ObjectInstance | c:m | | |



Copyright International Organization for Standardization
Provided by IHS under license with ISO
No reproduction or networking permitted without license from IHS

Not for Resale

**Table F.24 (concluded) – Notification support**

| Index | Notification type template label | Value of object identifier for notification type | Constraints and values | Status | Support | | Additional information | Subindex | Notification field name label | Value of object identifier of attribute type associated with field | Constraints and values | Status | Support | Additional information |
|---|---|---|---|---|---|---|---|---|---|---|---|---|---|---|
| | | | | | Confirmed | Nonconfirmed | | | | | | | | |
| | | | | | | | | 5.1.10 | stateChangeDefinition | {2 9 3 2 7 28} | SET OF SEQUENCE | c:m | | |
| | | | | | | | | 5.1.10.1 | attributeID | - | AttributeId | c:m | | |
| | | | | | | | | 5.1.10.2 | oldAttributeValue | - | ANY DEFINED BY attributeID | c:m | | |
| | | | | | | | | 5.1.10.3 | newAttributeValue | - | ANY DEFINED BY attributeID | c:m | | |
| | | | | | | | | 5.1.11 | monitoredAttributes | {2 9 3 2 7 15} | SET OF Attribute | c:m | | |
| | | | | | | | | 5.1.12 | proposedRepairActions | {2 9 3 2 7 19} | SET OF CHOICE | c:m | | |
| | | | | | | | | 5.1.12.1 | OBJECT IDENTIFIER | - | OBJECT IDENTIFIER | c:m | | |
| | | | | | | | | 5.1.12.2 | INTEGER | - | INTEGER | c:m | | |
| | | | | | | | | 5.1.13 | additionalText | {2 9 3 2 7 7} | GraphicString | c:m | | |
| | | | | | | | | 5.1.14 | additionalInformation | {2 9 3 2 7 6} | SET OF SEQUENCE | c:m | | |
| | | | | | | | | 5.1.14.1 | identifier | - | OBJECT IDENTIFIER | c:m | | |
| | | | | | | | | 5.1.14.2 | significance | - | BOOLEAN | c:m | | |
| | | | | | | | | 5.1.14.3 | information | - | ANY DEFINED BY identifier | c:m | | |
| 6 | "Rec. X.721 \| ISO/IEC 10165-2 : 1992" stateChange | {2 9 3 2 10 14} | - | c11 | | | | 6.1 | StateChangeInfo | - | **Information Syntax** SEQUENCE | c11 | | |
| | | | | | | | | 6.1.1 | sourceIndicator | {2 9 3 2 7 26} | ENUMERATED | c:m | | |
| | | | | | | | | 6.1.2 | attributeIdentifierList | {2 9 3 2 7 8} | SET OF AttributeId | c:m | | |
| | | | | | | | | 6.1.3 | stateChangeDefinition | {2 9 3 2 7 28} | SET OF SEQUENCE | c:m | | |
| | | | | | | | | 6.1.3.1 | attributeID | - | AttributeId | c:m | | |
| | | | | | | | | 6.1.3.2 | oldAttributeValue | - | ANY DEFINED BY attributeID | c:m | | |
| | | | | | | | | 6.1.3.3 | newAttributeValue | - | ANY DEFINED BY attributeID | c:m | | |
| | | | | | | | | 6.1.4 | notificationIdentifier | {2 9 3 2 7 16} | INTEGER | c:m | | |
| | | | | | | | | 6.1.5 | correlatedNotifications | {2 9 3 2 7 12} | SET OF SEQUENCE | c:m | | |
| | | | | | | | | 6.1.5.1 | correlatedNotifications | {2 9 3 2 7 12} | SET OF INTEGER | c:m | | |
| | | | | | | | | 6.1.5.2 | sourceObjectInst | - | ObjectInstance | c:m | | |
| | | | | | | | | 6.1.6 | additionalText | {2 9 3 2 7 7} | GraphicString | c:m | | |
| | | | | | | | | 6.1.7 | additionalInformation | {2 9 3 2 7 6} | SET OF SEQUENCE | c:m | | |
| | | | | | | | | 6.1.7.1 | identifier | - | OBJECT IDENTIFIER | c:m | | |
| | | | | | | | | 6.1.7.2 | significance | - | BOOLEAN | c:m | | |
| | | | | | | | | 6.1.7.3 | information | - | ANY DEFINED BY identifier | c:m | | |

c6: if E.3/2a then m else -

c7: if E.3/3a or E.3/7a or E.3/10a or E.3/13a or E.3/18a or E.3/20a or E.3/24a then m else -

c8: if E.3/4a or E.3/8a or E.3/11a or E.3/14a or E.3/19a or E.3/21a or E.3/25a then m else -

c9: if E.3/5a then m else -

c10: if E.3/17a then m else -



Copyright International Organization for Standardization
Provided by IHS under license with ISO
No reproduction or networking permitted without license from IHS
Not for Resale

c11: if E.3/6a or E.3/9a or E.3/12a or E.3/15a or E.3/26a then m else -

### F.4.5 Actions

The specifier of a manager role implementation that claims to support the actions specified in this International Standard shall import a copy of this table and complete it.

**Table F.25 – Action support**

| Index | Action type template label | Value of object identifier for action type | Constraints and values | Status | Support | Additional information | Subindex | Action field name label | Constraints and values | Status | Support | Additional information |
|---|---|---|---|---|---|---|---|---|---|---|---|---|
| 1 | "CCITT Rec. X.723 (1993) \| ISO/IEC 10165-5 : 1993": activate | {2 9 3 5 9 0} | | c12 | | | 1.1 | ActionInfo | **Information Syntax** SET OF SEQUENCE | c12 | | |
| | | | | | | | 1.1.1 | identifier | OBJECT IDENTIFIER | c:m | | |
| | | | | | | | 1.1.2 | significance | BOOLEAN | c:o | | |
| | | | | | | | 1.1.3 | information | ANY DEFINED BY identifier | c:m | | |
| | | | | | | | 1.2 | ActionReply | **Reply Syntax** SET OF SEQUENCE | c:m | | |
| | | | | | | | 1.2.1 | identifier | OBJECT IDENTIFIER | c:m | | |
| | | | | | | | 1.2.2 | significance | BOOLEAN | c:o | | |
| | | | | | | | 1.2.3 | information | ANY DEFINED BY identifier | c:m | | |
| 2 | "CCITT Rec. X.723 (1993) \| ISO/IEC 10165-5 : 1993": deactivate | {2 9 3 5 9 1} | | c13 | | | 2.1 | ActionInfo | **Information Syntax** SET OF SEQUENCE | c13 | | |
| | | | | | | | 2.1.1 | identifier | OBJECT IDENTIFIER | c:m | | |
| | | | | | | | 2.1.2 | significance | BOOLEAN | c:o | | |
| | | | | | | | 2.1.3 | information | ANY DEFINED BY identifier | c:m | | |
| | | | | | | | 2.2 | ActionReply | **Reply Syntax** SET OF SEQUENCE | c:m | | |
| | | | | | | | 2.2.1 | identifier | OBJECT IDENTIFIER | c:m | | |
| | | | | | | | 2.2.2 | significance | BOOLEAN | c:o | | |
| | | | | | | | 2.2.3 | information | ANY DEFINED BY identifier | c:m | | |

c12: if E.3/22a then m else -

c13: if E.3/16a or E.3/23 then m else -

### F.4.6 Parameters

The specifier of a manager role implementation that claims to support the parameters specified in this International Standard shall import a copy of this table and complete it.

**Table F.26 – Parameter support**

| Index | Parameter template label | Value of object identifier for parameter | Constraints and values | Status | Support | Additional information |
|---|---|---|---|---|---|---|
| 1 | derivedGaugeNotCurrent | {1 2 840 10011 5 0} | SPECIFIC-ERROR DerivedGauge | c14 | | |
| 2 | fRMR | {2 15 0 5 1} | EVENT-INFO communicationsAlarm | c15 | | |

c14: if F.3/5a or F.3/5b or F.3/5c then m else -

c15: if F.17/5a then m else -



Copyright International Organization for Standardization
Provided by IHS under license with ISO
No reproduction or networking permitted without license from IHS Not for Resale

# Annex G
(normative)

# MOCS proforma[1)]

## G.1 Introduction

The purpose of this MOCS proforma is to provide a mechanism for a supplier of an implementation of a International Standard which claims conformance to a managed object class, to provide conformance information in a standard form.

### G.1.1 Instructions for completing the MOCS proforma to produce a MOCS[2)]

The MOCS proforma contained in this annex is comprised of information in tabular form, in accordance with ITU-T Rec X.724 | ISO/IEC 10165-6. The supplier of the implementation shall state which items are supported in tables below and if necessary provide additional information.

### G.1.2 Symbols, abbreviations and terms

The MOCS proforma contained in this Annex is comprised of information in tabular form, in accordance with CCITT Rec. X.291 | ISO/IEC 9646-2.

The notations used in the Status and Support columns are specified in E.1.3.

## G.2 The Data Link Service Access Point managed object

### G.2.1 Statement of conformance to the managed object class

**Table G.1 – dLSAP Managed object class support**

| Index | Managed object class template label | Value of object identifier for class | Support of all mandatory features? (Y/N) | Is the actual class the same as the managed object class to which conformance is claimed? (Y/N) |
|---|---|---|---|---|
| 1 | dLSAP | {2 15 0 3 13} | | |

If the answer to the actual class question in the managed object class support table is no, the supplier of the implementation shall fill in the actual class support table below.

**Table G.2 – dLSAP Actual class support**

| Index | Managed object class template for actual class | Value of object identifier for managed object class definition of actual class | Additional information |
|---|---|---|---|
| | | | |
| | | | |

[1)] Users of this International Standard may freely reproduce the PICS proforma in this Annex so that it can be used for its intended purpose, and may further publish the completed PICS.

[2)] Instructions for MOCS proforma are specified in ITU-T Rec. X.724 | ISO/IEC 10165-6.



Copyright International Organization for Standardization
Provided by IHS under license with ISO
No reproduction or networking permitted without license from IHS Not for Resale

### G.2.2 Packages

The supplier of the implementation shall state whether or not the packages specified by this managed object of this class are supported, in Table G.3.

**Table G.3 – dLSAP Package support**

| Index | Package template label | Value of object identifier for package | Constraints and values | Status | Support | Additional information |
|---|---|---|---|---|---|---|
| 1 | "Rec. X.721 \| ISO/IEC 10165-2 : 1992": allomorphicPackage | {2 9 3 2 4 17} | "if an object supports allomorphism" | c1 | | |
| 2 | "Rec. X.721 \| ISO/IEC 10165-2 : 1992": packagesPackage | {2 9 3 2 4 16} | "any registered package, other than this package has been instantiated" | c2 | | |
| 3 | "CCITT Rec. X.723 (1993) \| ISO/IEC 10165-5 : 1993": sap1P1 | | Mandatory | m | | |
| 4 | "Rec. X.721 \| ISO/IEC 10165-2 : 1992": topPackage | | Mandatory | m | | |

c1: if G.1/1b then - else m

c2: if G.3/1a then m else -

### G.2.3 Attributes

The supplier of the implementation shall state whether or not the attributes specified by all of the packages instantiated in a managed object of this class are supported, in the Support and Additional information columns of Table G.4. The supplier of the implementation shall indicate support for each of the operations for each attribute supported.

**Table G.4 – dLSAP Attribute support**

| | | | | Set by create | | Get | | Replace | | Add | | Remove | | Set to default | | |
|---|---|---|---|---|---|---|---|---|---|---|---|---|---|---|---|---|
| Index | Attribute template label | Value of object identifier for attribute | Constraints and values | Status | Support | Status | Support | Status | Support | Status | Support | Status | Support | Status | Support | Additional information |
| 1 | "Rec. X.721 \| ISO/IEC 10165-2 : 1992": allomorphs | {2 9 3 2 7 50} | SET OF ObjectClass | c3 | | c4 | | - | | - | | - | | - | | |
| 2 | "Rec. X.721 \| ISO/IEC 10165-2 : 1992": nameBinding | {2 9 3 2 7 63} | OBJECT IDENTIFIER | c5 | | m | | x | | - | | - | | x | | |
| 3 | "Rec. X.721 \| ISO/IEC 10165-2 : 1992": objectClass | {2 9 3 2 7 65} | ObjectClass | c6 | | m | | x | | - | | - | | x | | |
| 4 | "Rec. X.721 \| ISO/IEC 10165-2 : 1992": packages | {2 9 3 2 7 66} | SET OF OBJECT IDENTIFIER | c7 | | c8 | | c9 | | c9 | | c9 | | c9 | | |
| 5 | "CCITT Rec. X.723 (1993) \| ISO/IEC 10165-5 : 1993": sap1Address | {2 9 3 5 7 8} | INTEGER | c10 | | m | | c10 | | - | | - | | c10 | | |
| 6 | "CCITT Rec. X.723 (1993) \| ISO/IEC 10165-5 : 1993": sapId | {2 9 3 5 7 10} | GraphicString | c5 | | m | | x | | - | | - | | x | | |
| 7 | "CCITT Rec. X.723 (1993) \| ISO/IEC 10165-5 : 1993": userEntityNames | {2 9 3 5 7 15} | SET OF ObjectInstance | c10 | | m | | c11 | | c11 | | c11 | | c11 | | |

c3: if G.3/1a then (if H.1/1a then o else x) else -

c4: if G.3/1a then m else -



Copyright International Organization for Standardization
Provided by IHS under license with ISO
No reproduction or networking permitted without license from IHS Not for Resale

c5: if H.1/1a then o else x

c6: if H.1/1a then m else -

c7: if G.3/2a then (if H.1/1a then o else x) else -

c8: if G.3/2a then m else -

c9: if G.3/2a then x else -

c10: if G.1/1b or H.1/2a then x else -

c11: if G.1/1b then x else -

## G.3 The Data Link Subsystem managed object

### G.3.1 Statement of conformance to the managed object class

**Table G.5 – datalinkSubsystem Managed object class support**

| Index | Managed object class template label | Value of object identifier for class | Support of all mandatory features? (Y/N) | Is the actual class the same as the managed object class to which conformance is claimed? (Y/N) |
|---|---|---|---|---|
| 1 | datalinkSubsystem | {2 15 0 3 1} | | |

If the answer to the actual class question in the managed object class support table is no, the supplier of the implementation shall fill in the actual class support table below.

**Table G.6 – datalinkSubsystem Actual class support**

| Index | Managed object class template for actual class | Value of object identifier for managed object class definition of actual class | Additional information |
|---|---|---|---|
| | | | |
| | | | |

### G.3.2 Packages

The supplier of the implementation shall state whether or not the packages specified by this managed object of this class are supported, in Table G.7.

**Table G.7 – datalinkSubsystem Package support**

| Index | Package template label | Value of object identifier for package | Constraints and values | Status | Support | Additional information |
|---|---|---|---|---|---|---|
| 1 | "Rec. X.721 \| ISO/IEC 10165-2 : 1992": allomorphicPackage | {2 9 3 2 4 17} | "if an object supports allomorphism" | c12 | | |
| 2 | datalinkSubsystem-P | | Mandatory | m | | |
| 3 | "Rec. X.721 \| ISO/IEC 10165-2 : 1992": packagesPackage | {2 9 3 2 4 16} | "any registered package, other than this package has been instantiated" | c13 | | |
| 4 | "CCITT Rec. X.723 (1993) \| ISO/IEC 10165-5 : 1993": subsystemP1 | | Mandatory | m | | |
| 5 | "Rec. X.721 \| ISO/IEC 10165-2 : 1992": topPackage | | Mandatory | m | | |

c12: if G.5/1b then - else m

c13: if G.7/1a then m else -



Copyright International Organization for Standardization
Provided by IHS under license with ISO
No reproduction or networking permitted without license from IHS Not for Resale

### G.3.3 Attributes

The supplier of the implementation shall state whether or not the attributes specified by all of the packages instantiated in a managed object of this class are supported, in the Support and Additional information columns of Table G.8. The supplier of the implementation shall indicate support for each of the operations for each attribute supported.

**Table G.8 – datalinkSubsystem Attribute support**

| | | | | Set by create | | Get | | Replace | | Add | | Remove | | Set to default | | |
|---|---|---|---|---|---|---|---|---|---|---|---|---|---|---|---|---|
| Index | Attribute template label | Value of object identifier for attribute | Constraints and values | Status | Support | Status | Support | Status | Support | Status | Support | Status | Support | Status | Support | Additional information |
| 1 | "Rec. X.721 \| ISO/IEC 10165-2 : 1992": allomorphs | {2 9 3 2 7 50} | SET OF ObjectClass | c14 | | c15 | | - | | - | | - | | - | | |
| 2 | "Rec. X.721 \| ISO/IEC 10165-2 : 1992": nameBinding | {2 9 3 2 7 63} | OBJECT IDENTIFIER | x | | m | | x | | - | | - | | x | | |
| 3 | "Rec. X.721 \| ISO/IEC 10165-2 : 1992": objectClass | {2 9 3 2 7 65} | ObjectClass | x | | m | | x | | - | | - | | x | | |
| 4 | "Rec. X.721 \| ISO/IEC 10165-2 : 1992": packages | {2 9 3 2 7 66} | SET OF OBJECT IDENTIFIER | c16 | | c17 | | c16 | | c16 | | c16 | | c16 | | |
| 5 | "CCITT Rec. X.723 (1993) \| ISO/IEC 10165-5 : 1993": subsystemId | {2 9 3 5 7 11} | GraphicString | x | | m | | x | | - | | - | | x | | |

c14: if G.7/1a then x else -

c15: if G.7/1a then m else -

c16: if G.7/3a then x else -

c17: if G.7/3a then m else -

## G.4 The EWMA Metric Monitor managed object

### G.4.1 Statement of conformance to the managed object class

**Table G.9 – eWMAMetricMonitor Managed object class support**

| Index | Managed object class template label | Value of object identifier for class | Support of all mandatory features? (Y/N) | Is the actual class the same as the managed object class to which conformance is claimed? (Y/N) |
|---|---|---|---|---|
| 1 | eWMAMetricMonitor | {1 2 840 10011 3 2} | | |

If the answer to the actual class question in the managed object class support table is no, the supplier of the implementation shall fill in the actual class support table below.

**Table G.10 – eWMAMetricMonitor Actual class support**

| Index | Managed object class template for actual class | Value of object identifier for managed object class definition of actual class | Additional information |
|---|---|---|---|
| | | | |
| | | | |



Copyright International Organization for Standardization
Provided by IHS under license with ISO
No reproduction or networking permitted without license from IHS Not for Resale

### G.4.2 Packages

The supplier of the implementation shall state whether or not the packages specified by this managed object of this class are supported, in Table G.11.

**Table G.11 – eWMAMetricMonitor Package support**

| Index | Package template label | Value of object identifier for package | Constraints and values | Status | Support | Additional information |
|---|---|---|---|---|---|---|
| 1 | "Rec. X.721 \| ISO/IEC 10165-2 : 1992": allomorphicPackage | {2 9 3 2 4 17} | "if an object supports allomorphism" | c18 | | |
| 2 | configurationEventsReporting-P | {1 2 840 10011 4 1} | "configuration event reporting is supported." | o | | |
| 3 | counterDifference-P | {1 2 840 10011 4 0} | "counter to gauge conversion is requested" | o | | |
| 4 | counterOverflow-P | {1 2 840 10011 4 2} | "the counterDifference-P package is present and module arithmetic is required to calculate the new value of the derived gauge on counter overflow" | c19 | | |
| 5 | eWMAMetricMonitor-P | | Mandatory | m | | |
| 6 | "Rec. X.721 \| ISO/IEC 10165-2 : 1992": packagesPackage | {2 9 3 2 4 16} | "any registered package, other than this package has been instantiated" | c20 | | |
| 7 | scanner-P | | Mandatory | m | | |
| 8 | "Rec. X.721 \| ISO/IEC 10165-2 : 1992": topPackage | | Mandatory | m | | |

c18: if G.9/1b then - else m

c19: if G.11/3a then o else -

c20: if G.11/1a or G.11/2a or G.11/3a or G.11/4a then m else -

### G.4.3 Attributes

The supplier of the implementation shall state whether or not the attributes specified by all of the packages instantiated in a managed object of this class are supported, in the Support and Additional information columns of Table G.12. The supplier of the implementation shall indicate support for each of the operations for each attribute supported.

**Table G.12 – eWMAMetricMonitor Attribute support**

| | | | | Set by create | | Get | | Replace | | Add | | Remove | | Set to default | | |
|---|---|---|---|---|---|---|---|---|---|---|---|---|---|---|---|---|
| Index | Attribute template label | Value of object identifier for attribute | Constraints and values | Status | Support | Status | Support | Status | Support | Status | Support | Status | Support | Status | Support | Additional information |
| 1 | "Rec. X.721 \| ISO/IEC 10165-2 : 1992": administrativeState | {2 9 3 2 7 31} | ENUMERATED | m | | m | | m | | - | | - | | c21 | | |
| 2 | "Rec. X.721 \| ISO/IEC 10165-2 : 1992": allomorphs | {2 9 3 2 7 50} | SET OF ObjectClass | c22 | | c23 | | - | | - | | - | | - | | |
| 3 | counterModulus | {1 2 840 10011 7 5} | INTEGER | c24 | | c24 | | c24 | | - | | - | | c21 | | |
| 4 | counterTMinusGP | {1 2 840 10011 7 4} | INTEGER | c25 | | c25 | | c25 | | - | | - | | c21 | | |
| 5 | derivedGauge | {1 2 840 10011 7 6} | CHOICE derivedGaugeNotCurrent | m | | m | | m | | - | | - | | c21 | | |
| 6 | estimateOfMean | {1 2 840 10011 7 7} | CHOICE | m | | m | | m | | - | | - | | c21 | | |
| 7 | granularityPeriod | {1 2 840 10011 7 8} | CHOICE | m | | m | | m | | - | | - | | c21 | | |
| 8 | movingTimePeriod | {1 2 840 10011 7 12} | CHOICE | m | | m | | m | | - | | - | | c21 | | |



Copyright International Organization for Standardization
Provided by IHS under license with ISO
No reproduction or networking permitted without license from IHS Not for Resale

**Table G.12 (concluded) – eWMAMetricMonitor Attribute support**

| | | | | Set by create | | Get | | Replace | | Add | | Remove | | Set to default | | |
|---|---|---|---|---|---|---|---|---|---|---|---|---|---|---|---|---|
| Index | Attribute template label | Value of object identifier for attribute | Constraints and values | Status | Support | Status | Support | Status | Support | Status | Support | Status | Support | Status | Support | Additional information |
| 9 | "Rec. X.721 \| ISO/IEC 10165-2 : 1992": nameBinding | {2 9 3 2 7 63} | OBJECT IDENTIFIER | o | | m | | x | | - | | - | | x | | |
| 10 | "Rec. X.721 \| ISO/IEC 10165-2 : 1992": objectClass | {2 9 3 2 7 65} | ObjectClass | m | | m | | x | | - | | - | | x | | |
| 11 | observedAttributeId | {1 2 840 10011 7 9} | AttributeId | m | | m | | m | | - | | - | | c21 | | |
| 12 | observedManagedObjectInstance | {1 2 840 10011 7 10} | ObjectInstance | m | | m | | m | | - | | - | | c21 | | |
| 13 | "Rec. X.721 \| ISO/IEC 10165-2 : 1992": operationalState | {2 9 3 2 7 35} | ENUMERATED | x | | m | | x | | - | | - | | x | | |
| 14 | "Rec. X.721 \| ISO/IEC 10165-2 : 1992": packages | {2 9 3 2 7 66} | SET OF OBJECT IDENTIFIER | c26 | | c27 | | c28 | | c28 | | c28 | | c28 | | |
| 15 | scannerId | {1 2 840 10011 7 3} | GraphicString | o | | m | | x | | - | | - | | x | | |
| 16 | severityIndicatingThreshold | {1 2 840 10011 7 11} | SET OF SEQUENCE | m | | m | | m | | m | | m | | c21 | | |

c21: if G.9/1b then x else -

c22: if G.11/1a then o else -

c23: if G.11/1a then m else -

c24: if G.11/4a then m else -

c25: if G.11/3a then m else -

c26: if G.11/6a then o else -

c27: if G.11/6a then m else -

c28: if G.11/6a then x else -

## G.4.4 Notifications

**Table G.13 – eWMAMetricMonitor Notification support**

| | | | | | Support | | | | | | | | | | |
|---|---|---|---|---|---|---|---|---|---|---|---|---|---|---|---|
| Index | Notification type template label | Value of object identifier for notification type | Constraints and values | Status | Confirmed | Nonconfirmed | Additional information | Subindex | Notification field name label | Value of object identifier of attribute type associated with field | Constraints and values | Status | Support | Additional information |
| 1 | "Rec. X.721 \| ISO/IEC 10165-2 : 1992": attributeValueChange | {2 9 3 2 10 1} | - | c29 | | | | 1.1 | AttributeValueChangeInfo | - | **Information Syntax** SEQUENCE | c29 | | |
| | | | | | | | | 1.1.1 | sourceIndicator | {2 9 3 2 7 26} | ENUMERATED | c:o | | |
| | | | | | | | | 1.1.2 | attributeIdentifierList | {2 9 3 2 7 8} | SET OF AttributeId | c:o | | |
| | | | | | | | | 1.1.3 | attributeValueChangeDefinition | {2 9 3 2 7 10} | SET OF SEQUENCE | c:m | | |
| | | | | | | | | 1.1.3.1 | attributeID | - | AttributeId | c:m | | |
| | | | | | | | | 1.1.3.2 | oldAttributeValue | - | ANY DEFINED BY attributeID | c:o | | |
| | | | | | | | | 1.1.3.3 | newAttributeValue | - | ANY DEFINED BY attributeID | c:m | | |



Copyright International Organization for Standardization
Provided by IHS under license with ISO
No reproduction or networking permitted without license from IHS
Not for Resale

**Table G.13 (continued) – eWMAMetricMonitor Notification support**

| Index | Notification type template label | Value of object identifier for notification type | Constraints and values | Status | Support: Confirmed | Support: Nonconfirmed | Additional information | Subindex | Notification field name label | Value of object identifier of attribute type associated with field | Constraints and values | Status | Support | Additional information |
|---|---|---|---|---|---|---|---|---|---|---|---|---|---|---|
| | | | | | | | | 1.1.4 | notificationIdentifier | {2 9 3 2 7 16} | INTEGER | c:o | | |
| | | | | | | | | 1.1.5 | correlatedNotifications | {2 9 3 2 7 12} | SET OF SEQUENCE | c:o | | |
| | | | | | | | | 1 1.5.1 | correlatedNotifications | {2 9 3 2 7 12} | SET OF INTEGER | c:m | | |
| | | | | | | | | 1.1.5.2 | sourceObjectInst | - | ObjectInstance | c:o | | |
| | | | | | | | | 1.1.6 | additionalText | {2 9 3 2 7 7} | GraphicString | c:o | | |
| | | | | | | | | 1.1.7 | additionalInformation | {2 9 3 2 7 6} | SET OF SEQUENCE | c:o | | |
| | | | | | | | | 1.1.7.1 | identifier | - | OBJECT IDENTIFIER | c:m | | |
| | | | | | | | | 1.1.7.2 | significance | - | BOOLEAN | c:o | | |
| | | | | | | | | 1.1.7.3 | information | - | ANY DEFINED BY identifier | c:m | | |
| 2 | "Rec. X.721 \| ISO/IEC 10165-2 : 1992" objectCreation | {2 9 3 2 10 6} | - | c29 | | | | 2.1 | ObjectInfo | - | **Information Syntax** SEQUENCE | c29 | | |
| | | | | | | | | 2.1.1 | sourceIndicator | {2 9 3 2 7 26} | ENUMERATED | c:o | | |
| | | | | | | | | 2.1.2 | attributeList | {2 9 3 2 7 9} | SET OF Attribute | c:o | | |
| | | | | | | | | 2.1.3 | notificationIdentifier | {2 9 3 2 7 16} | INTEGER | c:o | | |
| | | | | | | | | 2.1.4 | correlatedNotifications | {2 9 3 2 7 12} | SET OF SEQUENCE | c:o | | |
| | | | | | | | | 2.1.4.1 | correlatedNotifications | {2 9 3 2 7 12} | SET OF INTEGER | c:m | | |
| | | | | | | | | 2.1.4.2 | sourceObjectInst | - | ObjectInstance | c:o | | |
| | | | | | | | | 2.1.5 | additionalText | {2 9 3 2 7 7} | GraphicStnng | c:o | | |
| | | | | | | | | 2.1.6 | additionalInformation | {2 9 3 2 7 6} | SET OF SEQUENCE | c:o | | |
| | | | | | | | | 2.1.6.1 | identifier | - | OBJECT IDENTIFIER | c:m | | |
| | | | | | | | | 2.1.6.2 | significance | - | BOOLEAN | c:o | | |
| | | | | | | | | 2.1.6.3 | information | - | ANY DEFINED BY identifier | c:m | | |
| 3 | "Rec. X.721 \| ISO/IEC 10165-2 : 1992" objectDeletion | {2 9 3 2 10 7} | - | c29 | | | | 3.1 | ObjectInfo | - | **Information Syntax** SEQUENCE | c29 | | |
| | | | | | | | | 3.1.1 | sourceIndicator | {2 9 3 2 7 26} | ENUMERATED | c:o | | |
| | | | | | | | | 3.1.2 | attributeList | {2 9 3 2 7 9} | SET OF Attribute | c:o | | |
| | | | | | | | | 3.1.3 | notificationIdentifier | {2 9 3 2 7 16} | INTEGER | c:o | | |
| | | | | | | | | 3.1.4 | correlatedNotifications | {2 9 3 2 7 12} | SET OF SEQUENCE | c:o | | |
| | | | | | | | | 3.1.4.1 | correlatedNotifications | {2 9 3 2 7 12} | SET OF INTEGER | c:m | | |
| | | | | | | | | 3.1.4.2 | sourceObjectInst | - | ObjectInstance | c:o | | |
| | | | | | | | | 3.1.5 | additionalText | {2 9 3 2 7 7} | GraphicString | c:o | | |
| | | | | | | | | 3.1.6 | additionalInformation | {2 9 3 2 7 6} | SET OF SEQUENCE | c:o | | |
| | | | | | | | | 3.1.6.1 | identifier | - | OBJECT IDENTIFIER | c:m | | |
| | | | | | | | | 3.1.6.2 | significance | - | BOOLEAN | c:o | | |
| | | | | | | | | 3.1.6.3 | information | - | ANY DEFINED BY identifier | c:m | | |



Copyright International Organization for Standardization
Provided by IHS under license with ISO
No reproduction or networking permitted without license from IHS
Not for Resale

**Table G.13 (continued) – eWMAMetricMonitor Notification support**

| Index | Notification type template label | Value of object identifier for notification type | Constraints and values | Status | Support: Confirmed | Support: Nonconfirmed | Additional information | Subindex | Notification field name label | Value of object identifier of attribute type associated with field | Constraints and values | Status | Support | Additional information |
|---|---|---|---|---|---|---|---|---|---|---|---|---|---|---|
| 4 | "Rec. X.721 \| ISO/IEC 10165-2 : 1992": qualityofServiceAlarm | {2 9 3 2 10 11} | - | m | | | | 4.1 | AlarmInfo | - | **Information Syntax** SEQUENCE | m | | |
| | | | | | | | | 4.1.1 | probableCause | {2 9 3 2 7 18} | CHOICE | m | | |
| | | | | | | | | 4.1.1.1 | globalValue | - | OBJECT IDENTIFIER | o.1 | | |
| | | | | | | | | 4.1.1.2 | localValue | - | INTEGER | o.1 | | |
| | | | | | | | | 4.1.2 | specificProblems | {2 9 3 2 7 27} | SET OF CHOICE | o | | |
| | | | | | | | | 4.1.2.1 | OBJECT IDENTIFIER | - | OBJECT IDENTIFIER | c:o.2 | | |
| | | | | | | | | 4.1.2.2 | INTEGER | - | INTEGER | c:o.2 | | |
| | | | | | | | | 4.1.3 | perceivedSeverity | {2 9 3 2 7 17} | ENUMERATED | m | | |
| | | | | | | | | 4.1.4 | backedUpStatus | {2 9 3 2 7 11} | BOOLEAN | o | | |
| | | | | | | | | 4.1.5 | backUpObject | {2 9 3 2 7 40} | ObjectInstance | o | | |
| | | | | | | | | 4.1.6 | trendIndication | {2 9 3 2 7 30} | ENUMERATED | o | | |
| | | | | | | | | 4.1.7 | thresholdInfo | {2 9 3 2 7 29} | SEQUENCE | o | | |
| | | | | | | | | 4.1.7.1 | triggeredThreshold | - | AttributeId | c:m | | |
| | | | | | | | | 4.1.7.2 | observedValue | - | CHOICE | c:m | | |
| | | | | | | | | 4.1.7.2.1 | integer | - | INTEGER | c:o.3 | | |
| | | | | | | | | 4.1.7.2.2 | real | - | REAL | c:o.3 | | |
| | | | | | | | | 4.1.7.3 | thresholdLevel | - | CHOICE | c:o | | |
| | | | | | | | | 4.1.7.3.1 | up | - | SEQUENCE | c:o.4 | | |
| | | | | | | | | 4.1.7.3.1.1 | high | - | CHOICE | c:m | | |
| | | | | | | | | 4.1.7.3.1.1.1 | integer | - | INTEGER | c:o.5 | | |
| | | | | | | | | 4.1.7.3.1.1.2 | real | - | REAL | c:o.5 | | |
| | | | | | | | | 4.1.7.3.1.2 | low | - | CHOICE | c:o | | |
| | | | | | | | | 4.1.7.3.1.2.1 | integer | - | INTEGER | c:o.6 | | |
| | | | | | | | | 4.1.7.3.1.2.2 | real | - | REAL | c:o.6 | | |
| | | | | | | | | 4.1.7.3.2 | down | - | SEQUENCE | c:o.4 | | |
| | | | | | | | | 4.1.7.3.2.1 | high | - | CHOICE | c:m | | |
| | | | | | | | | 4.1.7.3.2.1.1 | integer | - | INTEGER | c:o.7 | | |
| | | | | | | | | 4.1.7.3.2.1.2 | real | - | REAL | c:o.7 | | |
| | | | | | | | | 4.1.7.3.2.2 | low | - | CHOICE | c:m | | |
| | | | | | | | | 4.1.7.3.2.2.1 | integer | - | INTEGER | c:o.8 | | |
| | | | | | | | | 4.1.7.3.2.2.2 | real | - | REAL | c:o.8 | | |
| | | | | | | | | 4.1.7.4 | armTime | - | GeneralizedTime | c:o | | |
| | | | | | | | | 4.1.8 | notificationIdentifier | {2 9 3 2 7 16} | INTEGER | o | | |
| | | | | | | | | 4.1.9 | correlatedNotifications | {2 9 3 2 7 12} | SET OF SEQUENCE | o | | |
| | | | | | | | | 4.1.9.1 | correlatedNotifications | {2 9 3 2 7 12} | SET OF INTEGER | c:m | | |
| | | | | | | | | 4.1.9.2 | sourceObjectInst | - | ObjectInstance | c:o | | |
| | | | | | | | | 4.1.10 | stateChangeDefinition | {2 9 3 2 7 28} | SET OF SEQUENCE | o | | |
| | | | | | | | | 4.1.10.1 | attributeID | - | AttributeId | c:m | | |
| | | | | | | | | 4.1.10.2 | oldAttributeValue | - | ANY DEFINED BY attributeID | c:o | | |



Copyright International Organization for Standardization
Provided by IHS under license with ISO
No reproduction or networking permitted without license from IHS

Not for Resale

**Table G.13 (concluded) – eWMAMetricMonitor Notification support**

| Index | Notification type template label | Value of object identifier for notification type | Constraints and values | Status | Support: Confirmed | Support: Nonconfirmed | Additional information | Subindex | Notification field name label | Value of object identifier of attribute type associated with field | Constraints and values | Status | Support | Additional information |
|---|---|---|---|---|---|---|---|---|---|---|---|---|---|---|
| | | | | | | | | 4.1.10.3 | newAttributeValue | - | ANY DEFINED BY attributeID | c:m | | |
| | | | | | | | | 4.1 11 | monitoredAttributes | {2 9 3 2 7 15} | SET OF Attribute | o | | |
| | | | | | | | | 4.1.12 | proposedRepairActions | {2 9 3 2 7 19} | SET OF CHOICE | o | | |
| | | | | | | | | 4.1.12.1 | OBJECT IDENTIFIER | - | OBJECT IDENTIFIER | c:o.9 | | |
| | | | | | | | | 4.1.12.2 | INTEGER | - | INTEGER | c:o.9 | | |
| | | | | | | | | 4.1.13 | additionalText | {2 9 3 2 7 7} | GraphicString | o | | |
| | | | | | | | | 4.1.14 | additionalInformation | {2 9 3 2 7 6} | SET OF SEQUENCE | o | | |
| | | | | | | | | 4.1.14.1 | identifier | - | OBJECT IDENTIFIER | c:m | | |
| | | | | | | | | 4.1.14.2 | significance | - | BOOLEAN | c:o | | |
| | | | | | | | | 4.1.14.3 | information | - | ANY DEFINED BY identifier | c:m | | |
| 5 | "Rec. X.721 \| ISO/IEC 10165-2 : 1992": stateChange | {2 9 3 2 10 14} | - | c29 | | | | 5.1 | StateChangeInfo | - | **Information Syntax** SEQUENCE | c29 | | |
| | | | | | | | | 5.1.1 | sourceIndicator | {2 9 3 2 7 26} | ENUMERATED | c:o | | |
| | | | | | | | | 5.1.2 | attributeIdentifierList | {2 9 3 2 7 8} | SET OF AttributeId | c:o | | |
| | | | | | | | | 5.1.3 | stateChangeDefinition | {2 9 3 2 7 28} | SET OF SEQUENCE | c:m | | |
| | | | | | | | | 5.1.3.1 | attributeID | - | AttributeId | c:m | | |
| | | | | | | | | 5.1.3.2 | oldAttributeValue | - | ANY DEFINED BY attributeID | c:o | | |
| | | | | | | | | 5.1.3.3 | newAttributeValue | - | ANY DEFINED BY attributeID | c:m | | |
| | | | | | | | | 5.1.4 | notificationIdentifier | {2 9 3 2 7 16} | INTEGER | c:o | | |
| | | | | | | | | 5.1.5 | correlatedNotifications | {2 9 3 2 7 12} | SET OF SEQUENCE | c:o | | |
| | | | | | | | | 5.1.5.1 | correlatedNotifications | {2 9 3 2 7 12} | SET OF INTEGER | c:m | | |
| | | | | | | | | 5.1.5.2 | sourceObjectInst | - | ObjectInstance | c:o | | |
| | | | | | | | | 5.1.6 | additionalText | {2 9 3 2 7 7} | GraphicString | c:o | | |
| | | | | | | | | 5.1.7 | additionalInformation | {2 9 3 2 7 6} | SET OF SEQUENCE | c:o | | |
| | | | | | | | | 5.1.7.1 | identifier | - | OBJECT IDENTIFIER | c:m | | |
| | | | | | | | | 5.1.7.2 | significance | - | BOOLEAN | c:o | | |
| | | | | | | | | 5.1.7.3 | information | - | ANY DEFINED BY identifier | c:m | | |

c29: if G.11/2a then m else -

## G.4.5 Parameter

**Table G.14 – eWMAMetricMonitor Parameter support**

| Index | Parameter template label | Value of object identifier for parameter | Constraints and values | Status | Support | Additional information |
|---|---|---|---|---|---|---|
| 1 | derivedGaugeNotCurrent | {1 2 840 10011 5 0} | SPECIFIC-ERROR DerivedGauge | m | | |



Copyright International Organization for Standardization
Provided by IHS under license with ISO
No reproduction or networking permitted without license from IHS
Not for Resale

## G.5 The LAPB Data Link Entity managed object

### G.5.1 Statement of conformance to the managed object class

**Table G.15 – IAPBDLE Managed object class support**

| Index | Managed object class template label | Value of object identifier for class | Support of all mandatory features? (Y/N) | Is the actual class the same as the managed object class to which conformance is claimed? (Y/N) |
|---|---|---|---|---|
| 1 | IAPBDLE | {2 15 0 3 3} | | |

If the answer to the actual class question in the managed object class support table is no, the supplier of the implementation shall fill in the actual class support table below.

**Table G.16 – IAPBDLE Actual class support**

| Index | Managed object class template for actual class | Value of object identifier for managed object class definition of actual class | Additional information |
|---|---|---|---|
| | | | |
| | | | |

### G.5.2 Packages

The supplier of the implementation shall state whether or not the packages specified by this managed object of this class are supported, in Table G.17.

**Table G.17 – IAPBDLE Package support**

| Index | Package template label | Value of object identifier for package | Constraints and values | Status | Support | Additional information |
|---|---|---|---|---|---|---|
| 1 | "Rec. X.721 \| ISO/IEC 10165-2 : 1992": allomorphicPackage | {2 9 3 2 4 17} | "if an object supports allomorphism" | c30 | | |
| 2 | "CCITT Rec. X.723 (1993) \| ISO/IEC 10165-5 : 1993": communicationsEntityP1 | | Mandatory | m | | |
| 3 | datalinkEntity-P | | Mandatory | m | | |
| 4 | *mLP-P* | {2 15 0 4 1} | "IAPBDLE supports mlp procedures" | o | | |
| 5 | mT2-P | {2 15 0 4 5} | "IAPBDLE supports mlp procedures and mT2 timer." | o | | |
| 6 | "Rec. X.721 \| ISO/IEC 10165-2 : 1992": packagesPackage | {2 9 3 2 4 16} | "any registered package, other than this package has been instantiated" | c31 | | |
| 7 | "Rec. X.721 \| ISO/IEC 10165-2 : 1992": topPackage | | Mandatory | m | | |

c30: if G.15/1b then - else m

c31: if G.17/1a or G.17/4a or G.17/5a then m else -



Copyright International Organization for Standardization
Provided by IHS under license with ISO
No reproduction or networking permitted without license from IHS Not for Resale

### G.5.3 Attributes

The supplier of the implementation shall state whether or not the attributes specified by all of the packages instantiated in a managed object of this class are supported, in the Support and Additional information columns of Table G.23. The supplier of the implementation shall indicate support for each of the operations for each attribute supported.

**Table G.18 – IAPBDLE Attribute support**

| | | | | Set by create | | Get | | Replace | | Add | | Remove | | Set to default | | |
|---|---|---|---|---|---|---|---|---|---|---|---|---|---|---|---|---|
| Index | Attribute template label | Value of object identifier for attribute | Constraints and values | Status | Support | Status | Support | Status | Support | Status | Support | Status | Support | Status | Support | Additional information |
| 1 | "Rec. X.721 \| ISO/IEC 10165-2 : 1992": allomorphs | {2 9 3 2 7 50} | SET OF ObjectClass | c32 | | c33 | | - | | - | | - | | - | | |
| 2 | "CCITT Rec. X.723 (1993) \| ISO/IEC 10165-5 : 1993": communicationsEntityId | {2 9 3 5 7 0} | GraphicString | c34 | | m | | x | | - | | - | | x | | |
| 3 | "CCITT Rec. X.723 (1993) \| ISO/IEC 10165-5 : 1993": localSapNames | {2 9 3 5 7 6} | SET OF ObjectInstance | c35 | | m | | c36 | | c36 | | c36 | | c36 | | |
| 4 | mT1Timer | {2 15 0 7 12} | SEQUENCE | c37 | | c38 | | c38 | | - | | - | | c38 | | |
| 5 | mT2Timer | {2 15 0 7 13} | SEQUENCE | c39 | | c40 | | c40 | | - | | - | | c40 | | |
| 6 | mT3Timer | {2 15 0 7 14} | SEQUENCE | c37 | | c38 | | c38 | | - | | - | | c38 | | |
| 7 | "Rec. X.721 \| ISO/IEC 10165-2 : 1992": nameBinding | {2 9 3 2 7 63} | OBJECT IDENTIFIER | c34 | | m | | x | | - | | - | | x | | |
| 8 | "Rec. X.721 \| ISO/IEC 10165-2 : 1992": objectClass | {2 9 3 2 7 65} | ObjectClass | c41 | | m | | x | | - | | - | | x | | |
| 9 | "Rec. X.721 \| ISO/IEC 10165-2 : 1992": operationalState | {2 9 3 2 7 35} | ENUMERATED | x | | m | | x | | - | | - | | x | | |
| 10 | "Rec. X.721 \| ISO/IEC 10165-2 : 1992": packages | {2 9 3 2 7 66} | SET OF OBJECT IDENTIFIER | c42 | | c43 | | c44 | | c44 | | c44 | | c44 | | |
| 11 | providerEntityNames | {2 15 0 7 11} | SET OF ObjectInstance | c41 | | m | | m | | - | | - | | m | | |

c32: if G.17/1a then (if H.1/3a then o else x) else -

c33: if G.17/1a then m else -

c34: if H.1/3a then o else x

c35: if G.15/1b or H.1/4a then x else -

c36: if G.15/1b then x else -

c37: if G.17/4a then (if H.1/3a then m else x) else -

c38: if G.17/4a then m else -

c39: if G.17/5a then (if H.1/3a then m else then x) else -

c40: if G.17/5a then m else -

c41: if H.1/3a then m else x

c42: if G.17/6a then (if H.1/3a then o else x) else -

c43: if G.17/6a then m else -

c44: if G.17/6a then x else -



Copyright International Organization for Standardization
Provided by IHS under license with ISO
No reproduction or networking permitted without license from IHS Not for Resale

## G.5.4 Attribute group

**Table G.19 – IAPBDLE Attribute group support**

| | | | | Get | | Set to default | | |
|---|---|---|---|---|---|---|---|---|
| Index | Attribute group template label | Value of object identifier for attribute group | Constraints and values | Status | Support | Status | Support | Additional information |
| 1 | "Rec. X.721 \| ISO/IEC 10165-2 : 1992": state | {2 9 3 2 8 1} | "Rec. X.721 \| ISO/IEC 10165-2 : 1992": operationalState | m | | c36 | | |
| 2 | timers | {2 15 0 8 1} | mT1Timer<br>mT2Timer<br>mT3Timer | c45 | | c45 | | |

c45: if G.17/4a or G.17/5a then m else -

## G.5.5 Notifications

**Table G.20 – IAPBDLE Notification support**

| | | | | | Support | | | | | | | | | |
|---|---|---|---|---|---|---|---|---|---|---|---|---|---|---|
| Index | Notification type template label | Value of object identifier for notification type | Constraints and values | Status | Confirmed | Nonconfirmed | Additional information | Subindex | Notification field name label | Value of object identifier of attribute type associated with field | Constraints and values | Status | Support | Additional information |
| 1 | "Rec. X.721 \| ISO/IEC 10165-2 : 1992": objectCreation | {2 9 3 2 10 6} | | m | | | | 1.1 | ObjectInfo | | **Information Syntax** SEQUENCE | m | | |
| | | | | | | | | 1.1.1 | sourceIndicator | {2 9 3 2 7 26} | ENUMERATED | o | | |
| | | | | | | | | 1.1.2 | attributeList | {2 9 3 2 7 9} | SET OF Attribute | o | | |
| | | | | | | | | 1.1.3 | notificationIdentifier | {2 9 3 2 7 16} | INTEGER | o | | |
| | | | | | | | | 1.1.4 | correlatedNotifications | {2 9 3 2 7 12} | SET OF SEQUENCE | o | | |
| | | | | | | | | 1.1.4.1 | correlatedNotifications | {2 9 3 2 7 12} | SET OF INTEGER | c:m | | |
| | | | | | | | | 1.1.4.2 | sourceObjectInst | - | ObjectInstance | c:o | | |
| | | | | | | | | 1.1.5 | additionalText | {2 9 3 2 7 7} | GraphicString | o | | |
| | | | | | | | | 1.1.6 | additionalInformation | {2 9 3 2 7 6} | SET OF SEQUENCE | o | | |
| | | | | | | | | 1.1.6.1 | identifier | - | OBJECT IDENTIFIER | c:m | | |
| | | | | | | | | 1.1.6.2 | significance | - | BOOLEAN | c:o | | |
| | | | | | | | | 1.1.6.3 | information | - | ANY DEFINED BY identifier | c:m | | |
| 2 | "Rec. X.721 \| ISO/IEC 10165-2 : 1992": objectDeletion | {2 9 3 2 10 7} | | m | | | | 2.1 | ObjectInfo | | **Information Syntax** SEQUENCE | m | | |
| | | | | | | | | 2.1.1 | sourceIndicator | {2 9 3 2 7 26} | ENUMERATED | o | | |
| | | | | | | | | 2.1.2 | attributeList | {2 9 3 2 7 9} | SET OF Attribute | o | | |
| | | | | | | | | 2.1.3 | notificationIdentifier | {2 9 3 2 7 16} | INTEGER | o | | |
| | | | | | | | | 2.1.4 | correlatedNotifications | {2 9 3 2 7 12} | SET OF SEQUENCE | o | | |
| | | | | | | | | 2.1.4.1 | correlatedNotifications | {2 9 3 2 7 12} | SET OF INTEGER | c:m | | |
| | | | | | | | | 2.1.4.2 | sourceObjectInst | - | ObjectInstance | c:o | | |



Copyright International Organization for Standardization
Provided by IHS under license with ISO
No reproduction or networking permitted without license from IHS

Not for Resale

**Table G.20 (concluded) – IAPBDLE Notification support**

| Index | Notification type template label | Value of object identifier for notification type | Constraints and values | Status | Support: Confirmed | Support: Nonconfirmed | Additional information | Subindex | Notification field name label | Value of object identifier of attribute type associated with field | Constraints and values | Status | Support | Additional information |
|---|---|---|---|---|---|---|---|---|---|---|---|---|---|---|
| | | | | | | | | 2.1.5 | additionalText | {2 9 3 2 7 7} | GraphicString | o | | |
| | | | | | | | | 2.1.6 | additionalInformation | {2 9 3 2 7 6} | SET OF SEQUENCE | o | | |
| | | | | | | | | 2.1.6.1 | identifier | - | OBJECT IDENTIFIER | c:m | | |
| | | | | | | | | 2.1.6.2 | significance | - | BOOLEAN | c:o | | |
| | | | | | | | | 2.1.6.3 | information | - | ANY DEFINED BY identifier | c:m | | |
| 3 | "Rec. X.721 \| ISO/IEC 10165-2 : 1992": stateChange | {2 9 3 2 10 14} | | m | | | | 3.1 | StateChangeInfo | | **Information Syntax** SEQUENCE | m | | |
| | | | | | | | | 3.1.1 | sourceIndicator | {2 9 3 2 7 26} | ENUMERATED | o | | |
| | | | | | | | | 3.1.2 | attributeIdentifierList | {2 9 3 2 7 8} | SET OF AttributeId | o | | |
| | | | | | | | | 3.1.3 | stateChangeDefinition | {2 9 3 2 7 28} | SET OF SEQUENCE | m | | |
| | | | | | | | | 3.1.3.1 | attributeID | - | AttributeId | m | | |
| | | | | | | | | 3.1.3.2 | oldAttributeValue | - | ANY DEFINED BY attributeID | o | | |
| | | | | | | | | 3.1.3.3 | newAttributeValue | - | ANY DEFINED BY attributeID | m | | |
| | | | | | | | | 3.1.4 | notificationIdentifier | {2 9 3 2 7 16} | INTEGER | o | | |
| | | | | | | | | 3.1.5 | correlatedNotifications | {2 9 3 2 7 12} | SET OF SEQUENCE | o | | |
| | | | | | | | | 3.1.5.1 | correlatedNotifications | {2 9 3 2 7 12} | SET OF INTEGER | c:m | | |
| | | | | | | | | 3.1.5.2 | sourceObjectInst | - | ObjectInstance | c:o | | |
| | | | | | | | | 3.1.6 | additionalText | {2 9 3 2 7 7} | GraphicString | o | | |
| | | | | | | | | 3.1.7 | additionalInformation | {2 9 3 2 7 6} | SET OF SEQUENCE | o | | |
| | | | | | | | | 3.1.7.1 | identifier | - | OBJECT IDENTIFIER | c:m | | |
| | | | | | | | | 3.1.7.2 | significance | - | BOOLEAN | c:o | | |
| | | | | | | | | 3.1.7.3 | information | - | ANY DEFINED BY identifier | c:m | | |

## G.6 The LLC Connectionless Protocol Machine managed object

### G.6.1 Statement of conformance to the managed object class

The supplier of the implementation shall support at least one managed object class derived from lLCCLPM managed object class. The supplier of the implementation shall fill in the support managed object class below.

**Table G.21 – subclass of lLCCLPM support**

| Index | Supported managed object class template | Value of object identifier for managed object class definition | Additional information |
|---|---|---|---|
| | | | |



Copyright International Organization for Standardization
Provided by IHS under license with ISO
No reproduction or networking permitted without license from IHS Not for Resale

## G.7 The LLC Connection-mode Protocol Machine managed object

### G.7.1 Statement of conformance to the managed object class

The supplier of the implementation shall support at least one managed object class derived from ILCCOPM managed object class. The supplier of the implementation shall fill in the support managed object class below.

**Table G.22 – subclass of ILCCOPM support**

| Index | Supported managed object class template | Value of object identifier for managed object class definition | Additional information |
|---|---|---|---|
| | | | |

## G.8 The LLC Data Link Entity managed object

### G.8.1 Statement of conformance to the managed object class

**Table G.23 – ILCDLE Managed object class support**

| Index | Managed object class template label | Value of object identifier for class | Support of all mandatory features? (Y/N) | Is the actual class the same as the managed object class to which conformance is claimed? (Y/N) |
|---|---|---|---|---|
| 1 | ILCDLE | {2 15 0 3 9} | | |

If the answer to the actual class question in the managed object class support table is no, the supplier of the implementation shall fill in the actual class support table below.

**Table G.24 – ILCDLE Actual class support**

| Index | Managed object class template for actual class | Value of object identifier for managed object class definition of actual class | Additional information |
|---|---|---|---|
| | | | |
| | | | |

### G.8.2 Packages

The supplier of the implementation shall state whether or not the packages specified by this managed object of this class are supported, in Table G.25.

**Table G.25 – ILCDLE Package support**

| Index | Package template label | Value of object identifier for package | Constraints and values | Status | Support | Additional information |
|---|---|---|---|---|---|---|
| 1 | "Rec. X.721 \| ISO/IEC 10165-2 : 1992": allomorphicPackage | {2 9 3 2 4 17} | "if an object supports allomorphism" | c46 | | |
| 2 | "CCITT Rec. X.723 (1993) \| ISO/IEC 10165-5 : 1993": communicationsEntityP1 | | Mandatory | m | | |
| 3 | datalinkEntity-P | | Mandatory | m | | |
| 4 | "Rec. X.721 \| ISO/IEC 10165-2 : 1992": packagesPackage | {2 9 3 2 4 16} | "any registered package, other than this package has been instantiated" | c47 | | |
| 5 | "Rec. X.721 \| ISO/IEC 10165-2 : 1992": topPackage | | Mandatory | m | | |

c46: if G.23/1b then - else m

c47: if G.25/1a then m else -



Copyright International Organization for Standardization
Provided by IHS under license with ISO
No reproduction or networking permitted without license from IHS Not for Resale

### G.8.3 Attributes

The supplier of the implementation shall state whether or not the attributes specified by all of the packages instantiated in a managed object of this class are supported, in the Support and Additional information columns of Table G.26. The supplier of the implementation shall indicate support for each of the operations for each attribute supported.

**Table G.26 – ILCDLE Attribute support**

| | | | | Set by create | | Get | | Replace | | Add | | Remove | | Set to default | | |
|---|---|---|---|---|---|---|---|---|---|---|---|---|---|---|---|---|
| Index | Attribute template label | Value of object identifier for attribute | Constraints and values | Status | Support | Status | Support | Status | Support | Status | Support | Status | Support | Status | Support | Additional information |
| 1 | "Rec. X.721 \| ISO/IEC 10165-2 : 1992": allomorphs | {2 9 3 2 7 50} | SET OF ObjectClass | c48 | | c49 | | - | | - | | - | | - | | |
| 2 | "CCITT Rec. X.723 (1993) \| ISO/IEC 10165-5 : 1993": communicationsEntityId | {2 9 3 5 7 0} | GraphicString | c50 | | m | | x | | - | | - | | x | | |
| 3 | "CCITT Rec. X.723 (1993) \| ISO/IEC 10165-5 : 1993": localSapNames | {2 9 3 5 7 6} | SET OF ObjectInstance | c51 | | m | | c52 | | c52 | | c52 | | c52 | | |
| 4 | "Rec. X.721 \| ISO/IEC 10165-2 : 1992": nameBinding | {2 9 3 2 7 63} | OBJECT IDENTIFIER | c50 | | m | | x | | - | | - | | x | | |
| 5 | "Rec. X.721 \| ISO/IEC 10165-2 : 1992": objectClass | {2 9 3 2 7 65} | ObjectClass | c53 | | m | | x | | - | | - | | x | | |
| 6 | "Rec. X.721 \| ISO/IEC 10165-2 : 1992": operationalState | {2 9 3 2 7 35} | ENUMERATED | x | | m | | x | | - | | - | | x | | |
| 7 | "Rec. X.721 \| ISO/IEC 10165-2 : 1992": packages | {2 9 3 2 7 66} | SET OF OBJECT IDENTIFIER | c54 | | c55 | | c56 | | c56 | | c56 | | c56 | | |
| 8 | providerEntityNames | {2 15 0 7 11} | SET OF ObjectInstance | c53 | | m | | m | | c52 | | c52 | | m | | |

c48: if G.25/1a then (if H.1/3a then o else x) else -

c49: if G.25/1a then m else -

c50: if H.1/3a then o else x

c51: if G.23/1b or H.1/4a then x else -

c52: if G.23/1b then x else -

c53: if H.1/3a then m else x

c54: if G.25/4a then (if H.1/3a then o else x) else -

c55: if G.25/4a then m else -

c56: if G.25/4a then x else -

### G.8.4 Attribute group

**Table G.27 – ILCDLE Attribute group support**

| | | | | Get | | Set to default | | |
|---|---|---|---|---|---|---|---|---|
| Index | Attribute group template label | Value of object identifier for attribute group | Constraints and values | Status | Support | Status | Support | Additional information |
| 1 | "Rec. X.721 \| ISO/IEC 10165-2 : 1992": state | {2 9 3 2 8 1} | "Rec. X.721 \| ISO/IEC 10165-2 : 1992": operationalState | m | | c52 | | |



Copyright International Organization for Standardization
Provided by IHS under license with ISO
No reproduction or networking permitted without license from IHS Not for Resale

## G.8.5 Notifications

**Table G.28 – ILCDLE Notification support**

| Index | Notification type template label | Value of object identifier for notification type | Constraints and values | Status | Support | | Additional information | Subindex | Notification field name label | Value of object identifier of attribute type associated with field | Constraints and values | Status | Support | Additional information |
|---|---|---|---|---|---|---|---|---|---|---|---|---|---|---|
| | | | | | Confirmed | Nonconfirmed | | | | | | | | |
| 1 | "Rec. X.721 \| ISO/IEC 10165-2 : 1992": objectCreation | {2 9 3 2 10 6} | | m | | | | 1.1 | ObjectInfo | | **Information Syntax** SEQUENCE | m | | |
| | | | | | | | | 1.1.1 | sourceIndicator | {2 9 3 2 7 26} | ENUMERATED | o | | |
| | | | | | | | | 1.1.2 | attributeList | {2 9 3 2 7 9} | SET OF Attribute | o | | |
| | | | | | | | | 1.1.3 | notificationIdentifier | {2 9 3 2 7 16} | INTEGER | o | | |
| | | | | | | | | 1.1.4 | correlatedNotifications | {2 9 3 2 7 12} | SET OF SEQUENCE | o | | |
| | | | | | | | | 1.1.4.1 | correlatedNotifications | {2 9 3 2 7 12} | SET OF INTEGER | c:m | | |
| | | | | | | | | 1.1.4.2 | sourceObjectInst | - | ObjectInstance | c:o | | |
| | | | | | | | | 1.1.5 | additionalText | {2 9 3 2 7 7} | GraphicString | o | | |
| | | | | | | | | 1.1.6 | additionalInformation | {2 9 3 2 7 6} | SET OF SEQUENCE | o | | |
| | | | | | | | | 1.1.6.1 | identifier | - | OBJECT IDENTIFIER | c:m | | |
| | | | | | | | | 1.1.6.2 | significance | - | BOOLEAN | c:o | | |
| | | | | | | | | 1.1.6.3 | information | - | ANY DEFINED BY identifier | c:m | | |
| 2 | "Rec. X.721 \| ISO/IEC 10165-2 : 1992": objectDeletion | {2 9 3 2 10 7} | | m | | | | 2.1 | ObjectInfo | | **Information Syntax** SEQUENCE | m | | |
| | | | | | | | | 2.1.1 | sourceIndicator | {2 9 3 2 7 26} | ENUMERATED | o | | |
| | | | | | | | | 2.1.2 | attributeList | {2 9 3 2 7 9} | SET OF Attribute | o | | |
| | | | | | | | | 2.1.3 | notificationIdentifier | {2 9 3 2 7 16} | INTEGER | o | | |
| | | | | | | | | 2.1.4 | correlatedNotifications | {2 9 3 2 7 12} | SET OF SEQUENCE | o | | |
| | | | | | | | | 2.1.4.1 | correlatedNotifications | {2 9 3 2 7 12} | SET OF INTEGER | c:m | | |
| | | | | | | | | 2.1.4.2 | *sourceObjectInst* | - | *ObjectInstance* | c:o | | |
| | | | | | | | | 2.1.5 | additionalText | {2 9 3 2 7 7} | GraphicString | o | | |
| | | | | | | | | 2.1.6 | additionalInformation | {2 9 3 2 7 6} | SET OF SEQUENCE | o | | |
| | | | | | | | | 2.1.6.1 | identifier | - | OBJECT IDENTIFIER | c:m | | |
| | | | | | | | | 2.1.6.2 | significance | - | BOOLEAN | c:o | | |
| | | | | | | | | 2.1.6.3 | information | - | ANY DEFINED BY identifier | c:m | | |
| 3 | "Rec. X.721 \| ISO/IEC 10165-2 : 1992": stateChange | {2 9 3 2 10 14} | | m | | | | 3.1 | StateChangeInfo | | **Information Syntax** SEQUENCE | m | | |
| | | | | | | | | 3.1.1 | sourceIndicator | {2 9 3 2 7 26} | ENUMERATED | o | | |
| | | | | | | | | 3.1.2 | attributeIdentifierList | {2 9 3 2 7 8} | SET OF AttributeId | o | | |
| | | | | | | | | 3.1.3 | stateChangeDefinition | {2 9 3 2 7 28} | SET OF SEQUENCE | m | | |
| | | | | | | | | 3.1.3.1 | attributeID | - | AttributeId | m | | |
| | | | | | | | | 3.1.3.2 | oldAttributeValue | - | ANY DEFINED BY *attributeID* | o | | |



Copyright International Organization for Standardization
Provided by IHS under license with ISO
No reproduction or networking permitted without license from IHS

Not for Resale

**Table G.28 (concluded) – ILCDLE Notification support**

| Index | Notification type template label | Value of object identifier for notification type | Constraints and values | Status | Support: Confirmed | Support: Nonconfirmed | Additional information | Subindex | Notification field name label | Value of object identifier of attribute type associated with field | Constraints and values | Status | Support | Additional information |
|---|---|---|---|---|---|---|---|---|---|---|---|---|---|---|
| | | | | | | | | 3.1.3.3 | newAttributeValue | - | ANY DEFINED BY attributeID | m | | |
| | | | | | | | | 3.1.4 | notificationIdentifier | {2 9 3 2 7 16} | INTEGER | o | | |
| | | | | | | | | 3.1.5 | correlatedNotifications | {2 9 3 2 7 12} | SET OF SEQUENCE | o | | |
| | | | | | | | | 3.1.5.1 | correlatedNotifications | {2 9 3 2 7 12} | SET OF INTEGER | c:m | | |
| | | | | | | | | 3.1.5.2 | sourceObjectInst | - | ObjectInstance | c:o | | |
| | | | | | | | | 3.1.6 | additionalText | {2 9 3 2 7 7} | GraphicString | o | | |
| | | | | | | | | 3.1.7 | additionalInformation | {2 9 3 2 7 6} | SET OF SEQUENCE | o | | |
| | | | | | | | | 3.1.7.1 | identifier | - | OBJECT IDENTIFIER | c:m | | |
| | | | | | | | | 3.1.7.2 | significance | - | BOOLEAN | c:o | | |
| | | | | | | | | 3.1.7.3 | information | - | ANY DEFINED BY identifier | c:m | | |

## G.9 The MAC managed object

### G.9.1 Statement of conformance to the managed object class

The supplier of the implementation shall support at least one managed object class derived from mAC managed object class. The supplier of the implementation shall fill in the support managed object class below.

**Table G.29 – subclass of mAC support**

| Index | Supported managed object class template | Value of object identifier for managed object class definition | Additional information |
|---|---|---|---|
| | | | |

## G.10 The MAC Data Link Entity managed object

### G.10.1 Statement of conformance to the managed object class

**Table G.30 – mACDLE Managed object class support**

| Index | Managed object class template label | Value of object identifier for class | Support of all mandatory features? (Y/N) | Is the actual class the same as the managed object class to which conformance is claimed? (Y/N) |
|---|---|---|---|---|
| 1 | mACDLE | {2 15 0 3 7} | | |

If the answer to the actual class question in the managed object class support table is no, the supplier of the implementation shall fill in the actual class support table below.

**Table G.31 – mACDLE Actual class support**

| Index | Managed object class template for actual class | Value of object identifier for managed object class definition of actual class | Additional information |
|---|---|---|---|
| | | | |
| | | | |



Copyright International Organization for Standardization
Provided by IHS under license with ISO
No reproduction or networking permitted without license from IHS Not for Resale

### G.10.2 Packages

The supplier of the implementation shall state whether or not the packages specified by this managed object of this class are supported, in Table G.32.

**Table G.32 – mACDLE Package support**

| Index | Package template label | Value of object identifier for package | Constraints and values | Status | Support | Additional *information* |
|---|---|---|---|---|---|---|
| 1 | "Rec. X.721 \| ISO/IEC 10165-2 : 1992": allomorphicPackage | {2 9 3 2 4 17} | "if an object supports allomorphism" | c57 | | |
| 2 | "CCITT Rec. X.723 (1993) \| ISO/IEC 10165-5 : 1993": communicationsEntityP1 | | Mandatory | m | | |
| 3 | datalinkEntity-P | | Mandatory | m | | |
| 4 | "Rec. X.721 \| ISO/IEC 10165-2 : 1992": packagesPackage | {2 9 3 2 4 16} | "any registered package, other than this package has been instantiated" | c58 | | |
| 5 | "Rec. X.721 \| ISO/IEC 10165-2 : 1992": topPackage | | Mandatory | m | | |

c57: if G.30/1b then - else m

c58: if G.32/1a then m else -

### G.10.3 Attributes

The supplier of the implementation shall state whether or not the attributes specified by all of the packages instantiated in a managed object of this class are supported, in the Support and Additional information columns of Table G.33. The supplier of the implementation shall indicate support for each of the operations for each attribute supported.

**Table G.33 – mACDLE Attribute support**

| | | | | Set by create | | Get | | Replace | | Add | | Remove | | Set to default | | |
|---|---|---|---|---|---|---|---|---|---|---|---|---|---|---|---|---|
| Index | Attribute template label | Value of object identifier for attribute | Constraints and values | Status | Support | Status | Support | Status | Support | Status | Support | Status | Support | Status | Support | Additional *information* |
| 1 | "Rec. X.721 \| ISO/IEC 10165-2 : 1992": allomorphs | {2 9 3 2 7 50} | SET OF ObjectClass | c59 | | c60 | | - | | - | | - | | - | | |
| 2 | "CCITT Rec. X.723 (1993) \| ISO/IEC 10165-5 : 1993": communicationsEntityId | {2 9 3 5 7 0} | GraphicString | c61 | | m | | x | | - | | - | | x | | |
| 3 | "CCITT Rec. X.723 (1993) \| ISO/IEC 10165-5 : 1993": localSapNames | {2 9 3 5 7 6} | SET OF ObjectInstance | c62 | | m | | c63 | | c63 | | c63 | | c63 | | |
| 4 | "Rec. X.721 \| ISO/IEC 10165-2 : 1992": nameBinding | {2 9 3 2 7 63} | OBJECT IDENTIFIER | c61 | | m | | x | | - | | - | | x | | |
| 5 | "Rec. X.721 \| ISO/IEC 10165-2 : 1992": objectClass | {2 9 3 2 7 65} | ObjectClass | c64 | | m | | x | | - | | - | | x | | |
| 6 | "Rec. X.721 \| ISO/IEC 10165-2 : 1992": operationalState | {2 9 3 2 7 35} | ENUMERATED | x | | m | | x | | - | | - | | x | | |
| 7 | "Rec. X.721 \| ISO/IEC 10165-2 : 1992": packages | {2 9 3 2 7 66} | SET OF OBJECT IDENTIFIER | c65 | | c66 | | c67 | | c67 | | c67 | | c67 | | |
| 8 | providerEntityNames | {2 15 0 7 11} | SET OF ObjectInstance | c64 | | m | | m | | c63 | | c63 | | m | | |

c59: if G.32/1a then (if H.1/3a then o else x) else -



Copyright International Organization for Standardization
Provided by IHS under license with ISO
No reproduction or networking permitted without license from IHS Not for Resale

c60: if G.31/1a then m else -

c61: if H.1/3a then o else x

c62: if G.30/1b or H.1/4a then x else -

c63: if G.30/1b then x else -

c64: if H.1/3a then m else x

c65: if G.32/4a then (if H.1/3a then o else x) else -

c66: if G.32/4a then m else -

c67: if G.32/4a then x else -

### G.10.4 Attribute group

**Table G.34 – mACDLE Attribute group support**

| | | | | Get | | Set to default | | |
|---|---|---|---|---|---|---|---|---|
| Index | Attribute group template label | Value of object identifier for attribute group | Constraints and values | Status | Support | Status | Support | Additional information |
| 1 | "Rec. X.721 \| ISO/IEC 10165-2 : 1992": state | {2 9 3 2 8 1} | "Rec. X.721 \| ISO/IEC 10165-2 : 1992": operationalState | m | | c63 | | |

### G.10.5 Notifications

**Table G.35 – mACDLE Notification support**

| | | | | | Support | | | | | | | | | |
|---|---|---|---|---|---|---|---|---|---|---|---|---|---|---|
| Index | Notification type template label | Value of object identifier for notification type | Constraints and values | Status | Confirmed | Nonconfirmed | Additional information | Subindex | Notification field name label | Value of object identifier of attribute type associated with field | Constraints and values | Status | Support | Additional information |
| 1 | "Rec. X.721 \| ISO/IEC 10165-2 : 1992": objectCreation | {2 9 3 2 10 6} | | m | | | | 1.1 | ObjectInfo | | **Information Syntax** SEQUENCE | m | | |
| | | | | | | | | 1.1.1 | sourceIndicator | {2 9 3 2 7 26} | ENUMERATED | o | | |
| | | | | | | | | 1.1.2 | attributeList | {2 9 3 2 7 9} | SET OF Attribute | o | | |
| | | | | | | | | 1.1.3 | notificationIdentifier | {2 9 3 2 7 16} | INTEGER | o | | |
| | | | | | | | | 1.1.4 | correlatedNotifications | {2 9 3 2 7 12} | SET OF SEQUENCE | o | | |
| | | | | | | | | 1.1.4.1 | correlatedNotifications | {2 9 3 2 7 12} | SET OF INTEGER | c:m | | |
| | | | | | | | | 1.1.4.2 | sourceObjectInst | - | ObjectInstance | c:o | | |
| | | | | | | | | 1.1.5 | additionalText | {2 9 3 2 7 7} | GraphicString | o | | |
| | | | | | | | | 1.1.6 | additionalInformation | {2 9 3 2 7 6} | SET OF SEQUENCE | o | | |
| | | | | | | | | 1.1.6.1 | identifier | - | OBJECT IDENTIFIER | c:m | | |
| | | | | | | | | 1.1.6.2 | significance | - | BOOLEAN | c:o | | |
| | | | | | | | | 1.1.6.3 | information | - | ANY DEFINED BY identifier | c:m | | |
| 2 | "Rec. X.721 \| ISO/IEC 10165-2 : 1992": objectDeletion | {2 9 3 2 10 7} | | m | | | | 2.1 | ObjectInfo | | **Information Syntax** SEQUENCE | m | | |



Copyright International Organization for Standardization
Provided by IHS under license with ISO
No reproduction or networking permitted without license from IHS Not for Resale

**Table G.35 (concluded) – mACDLE Notification support**

| Index | Notification type template label | Value of object identifier for notification type | Constraints and values | Status | Support: Confirmed | Support: Nonconfirmed | Additional information | Subindex | Notification field name label | Value of object identifier of attribute type associated with field | Constraints and values | Status | Support | Additional information |
|---|---|---|---|---|---|---|---|---|---|---|---|---|---|---|
| | | | | | | | | 2.1.1 | sourceIndicator | {2 9 3 2 7 26} | ENUMERATED | o | | |
| | | | | | | | | 2.1.2 | attributeList | {2 9 3 2 7 9} | SET OF Attribute | o | | |
| | | | | | | | | 2.1.3 | notificationIdentifier | {2 9 3 2 7 16} | INTEGER | o | | |
| | | | | | | | | 2.1.4 | correlatedNotifications | {2 9 3 2 7 12} | SET OF SEQUENCE | o | | |
| | | | | | | | | 2.1.4.1 | correlatedNotifications | {2 9 3 2 7 12} | SET OF INTEGER | c:m | | |
| | | | | | | | | 2.1.4.2 | sourceObjectInst | - | ObjectInstance | c:o | | |
| | | | | | | | | 2.1.5 | additionalText | {2 9 3 2 7 7} | GraphicString | o | | |
| | | | | | | | | 2.1.6 | additionalInformation | {2 9 3 2 7 6} | SET OF SEQUENCE | o | | |
| | | | | | | | | 2.1.6.1 | identifier | - | OBJECT IDENTIFIER | c:m | | |
| | | | | | | | | 2.1.6.2 | significance | - | BOOLEAN | c:o | | |
| | | | | | | | | 2.1.6.3 | information | - | ANY DEFINED BY identifier | c:m | | |
| 3 | "Rec. X.721 \| ISO/IEC 10165-2 : 1992": stateChange | {2 9 3 2 10 14} | | m | | | | 3.1 | StateChangeInfo | | **Information Syntax** SEQUENCE | m | | |
| | | | | | | | | 3.1.1 | sourceIndicator | {2 9 3 2 7 26} | ENUMERATED | o | | |
| | | | | | | | | 3.1.2 | attributeIdentifierList | {2 9 3 2 7 8} | SET OF AttributeId | o | | |
| | | | | | | | | 3.1.3 | stateChangeDefinition | {2 9 3 2 7 28} | SET OF SEQUENCE | m | | |
| | | | | | | | | 3.1.3.1 | attributeID | - | AttributeId | m | | |
| | | | | | | | | 3.1.3.2 | oldAttributeValue | - | ANY DEFINED BY attributeID | o | | |
| | | | | | | | | 3.1.3.3 | newAttributeValue | - | ANY DEFINED BY attributeID | m | | |
| | | | | | | | | 3.1.4 | notificationIdentifier | {2 9 3 2 7 16} | INTEGER | o | | |
| | | | | | | | | 3.1.5 | correlatedNotifications | {2 9 3 2 7 12} | SET OF SEQUENCE | o | | |
| | | | | | | | | 3.1.5.1 | correlatedNotifications | {2 9 3 2 7 12} | SET OF INTEGER | c:m | | |
| | | | | | | | | 3.1.5.2 | sourceObjectInst | - | ObjectInstance | c:o | | |
| | | | | | | | | 3.1.6 | additionalText | {2 9 3 2 7 7} | GraphicString | o | | |
| | | | | | | | | 3.1.7 | additionalInformation | {2 9 3 2 7 6} | SET OF SEQUENCE | o | | |
| | | | | | | | | 3.1.7.1 | identifier | - | OBJECT IDENTIFIER | c:m | | |
| | | | | | | | | 3.1.7.2 | significance | - | BOOLEAN | c:o | | |
| | | | | | | | | 3.1.7.3 | information | - | ANY DEFINED BY identifier | c:m | | |



Copyright International Organization for Standardization
Provided by IHS under license with ISO
No reproduction or networking permitted without license from IHS

Not for Resale

## G.11 The Resource TypeId managed object

### G.11.1 Statement of conformance to the managed object class

**Table G.36 – resourceTypeId Managed object class support**

| Index | Managed object class template label | Value of object identifier for class | Support of all mandatory features? (Y/N) | Is the actual class the same as the managed object class to which conformance is claimed? (Y/N) |
|---|---|---|---|---|
| 1 | resourceTypeId | {1 2 840 10011 3 0} | | |

If the answer to the actual class question in the managed object class support table is no, the supplier of the implementation shall fill in the actual class support table below.

**Table G.37 – resourceTypeId Actual class support**

| Index | Managed object class template for actual class | Value of object identifier for managed object class definition of actual class | Additional information |
|---|---|---|---|
| | | | |
| | | | |

### G.11.2 Packages

The supplier of the implementation shall state whether or not the packages specified by this managed object of this class are supported, in Table G.38.

**Table G.38 – resourceTypeId Package support**

| Index | Package template label | Value of object identifier for package | Constraints and values | Status | Support | Additional information |
|---|---|---|---|---|---|---|
| 1 | "Rec. X.721 \| ISO/IEC 10165-2 : 1992": allomorphicPackage | {2 9 3 2 4 17} | "if an object supports allomorphism" | c68 | | |
| 2 | "Rec. X.721 \| ISO/IEC 10165-2 : 1992": packagesPackage | {2 9 3 2 4 16} | "any registered package, other than this package has been instantiated" | c69 | | |
| 3 | resourceTypeId-P | | Mandatory | m | | |
| 4 | "Rec. X.721 \| ISO/IEC 10165-2 : 1992": topPackage | | Mandatory | m | | |

c68: if G.36/1b then - else m

c69: if G.38/1a then m else -

### G.2.3 Attributes

The supplier of the implementation shall state whether or not the attributes specified by all of the packages instantiated in a managed object of this class are supported, in the Support and Additional information columns of Table G.39. The supplier of the implementation shall indicate support for each of the operations for each attribute supported.



Copyright International Organization for Standardization
Provided by IHS under license with ISO
No reproduction or networking permitted without license from IHS Not for Resale

**Table G.39 – resourceTypeId Attribute support**

| | | | | Set by create | | Get | | Replace | | Add | | Remove | | Set to default | | |
|---|---|---|---|---|---|---|---|---|---|---|---|---|---|---|---|---|
| Index | Attribute template label | Value of object identifier for attribute | Constraints and values | Status | Support | Status | Support | Status | Support | Status | Support | Status | Support | Status | Support | Additional information |
| 1 | "Rec. X.721 \| ISO/IEC 10165-2 : 1992": allomorphs | {2 9 3 2 7 50} | SET OF ObjectClass | c70 | | c71 | | - | | - | | - | | - | | |
| 2 | "Rec. X.721 \| ISO/IEC 10165-2 : 1992": nameBinding | {2 9 3 2 7 63} | OBJECT IDENTIFIER | x | | m | | x | | - | | - | | x | | |
| 3 | "Rec. X.721 \| ISO/IEC 10165-2 : 1992": objectClass | {2 9 3 2 7 65} | ObjectClass | x | | m | | x | | - | | - | | x | | |
| 4 | "Rec. X.721 \| ISO/IEC 10165-2 : 1992": packages | {2 9 3 2 7 66} | SET OF OBJECT IDENTIFIER | c72 | | c73 | | c72 | | c72 | | c72 | | c72 | | |
| 5 | resourceInfo | {1 2 840 10011 7 2} | SEQUENCE | x | | m | | c74 | | - | | - | | c74 | | |
| 6 | resourceTypeIdName | {1 2 840 10011 7 1} | GraphicString | x | | m | | x | | - | | - | | x | | |

c70: if G.38/1a then x else -

c71: if G.38/1a then m else -

c72: if G.38/2a then x else -

c73: if G.38/2a then m else -

c74: if G.36/1a then x else -

## G.12 The LAPB Single Link Protocol Connection managed object

### G.12.1 Statement of conformance to the managed object class

**Table G.40 – sLPConnection Managed object class support**

| Index | Managed object class template label | Value of object identifier for class | Support of all mandatory features? (Y/N) | Is the actual class the same as the managed object class to which conformance is claimed? (Y/N) |
|---|---|---|---|---|
| 1 | sLPConnection | {2 15 0 3 5} | | |

If the answer to the actual class question in the managed object class support table is no, the supplier of the implementation shall fill in the actual class support table below.

**Table G.41 – sLPConnection Actual class support**

| Index | Managed object class template for actual class | Value of object identifier for managed object class definition of actual class | Additional information |
|---|---|---|---|
| | | | |
| | | | |

### G.12.2 Packages

The supplier of the implementation shall state whether or not the packages specified by this managed object of this class are supported, in Table G.42.



Copyright International Organization for Standardization
Provided by IHS under license with ISO
No reproduction or networking permitted without license from IHS Not for Resale

**Table G.42 – sLPConnection Package support**

| Index | Package template label | Value of object identifier for package | Constraints and values | Status | Support | Additional information |
|---|---|---|---|---|---|---|
| 1 | "Rec. X.721 \| ISO/IEC 10165-2 : 1992": allomorphicPackage | {2 9 3 2 4 17} | "if an object supports allomorphism" | c75 | | |
| 2 | commonSLPConnection-P | | Mandatory | m | | |
| 3 | "Rec. X.721 \| ISO/IEC 10165-2 : 1992": packagesPackage | {2 9 3 2 4 16} | "any registered package, other than this package has been instantiated" | c76 | | |
| 4 | sLPConnection-P | | Mandatory | m | | |
| 5 | "CCITT Rec. X.723 (1993) \| ISO/IEC 10165-5 : 1993": singlePeerConnectionP1 | | Mandatory | m | | |
| 6 | "CCITT Rec. X.723 (1993) \| ISO/IEC 10165-5 : 1993": singlePeerConnectionP2 | {2 9 3 5 4 2} | "The names of the connections supported by this connection can be provided" | o | | |
| 7 | t3-P | {2 15 0 4 2} | "Optional Timer T3 of ISO 7776 is supported." | o | | |
| 8 | "Rec. X.721 \| ISO/IEC 10165-2 : 1992": topPackage | | Mandatory | m | | |

c75: if G.40/1b then - else m

c76: if G.42/1a or G.42/6a or G.42/7a then m else -

## G.12.3 Attributes

The supplier of the implementation shall state whether or not the attributes specified by all of the packages instantiated in a managed object of this class are supported, in the Support and Additional information columns of Table G.43. The supplier of the implementation shall indicate support for each of the operations for each attribute supported.

**Table G.43 – sLPConnection Attribute support**

| | | | | Set by create | | Get | | Replace | | Add | | Remove | | Set to default | | |
|---|---|---|---|---|---|---|---|---|---|---|---|---|---|---|---|---|
| Index | Attribute template label | Value of object identifier for attribute | Constraints and values | Status | Support | Status | Support | Status | Support | Status | Support | Status | Support | Status | Support | Additional information |
| 1 | "Rec. X.721 \| ISO/IEC 10165-2 : 1992": allomorphs | {2 9 3 2 7 50} | SET OF ObjectClass | c77 | | c78 | | - | | - | | - | | - | | |
| 2 | "CCITT Rec. X.723 (1993) \| ISO/IEC 10165-5 : 1993": connectionId | {2 9 3 5 7 1} | GraphicString | x | | m | | x | | - | | - | | x | | |
| 3 | fCSErrorsReceived | {2 15 0 7 15} | INTEGER | x | | m | | c79 | | - | | - | | c79 | | |
| 4 | fRMRsReceived | {2 15 0 7 1} | INTEGER | x | | m | | c79 | | - | | - | | c79 | | |
| 5 | fRMRsSent | {2 15 0 7 2} | INTEGER | x | | m | | c79 | | - | | - | | c79 | | |
| 6 | iFrameDataOctetsReceived | {2 15 0 7 16} | INTEGER | x | | m | | c79 | | - | | - | | c79 | | |
| 7 | iFrameDataOctetsSent | {2 15 0 7 17} | INTEGER | x | | m | | c79 | | - | | - | | c79 | | |
| 8 | iFramesReceived | {2 15 0 7 3} | INTEGER | x | | m | | c79 | | - | | - | | c79 | | |
| 9 | iFramesSent | {2 15 0 7 4} | INTEGER | x | | m | | c79 | | - | | - | | c79 | | |
| 10 | interfaceType | {2 15 0 7 18} | ENUMERATED | x | | m | | m | | - | | - | | m | | |
| 11 | k | {2 15 0 7 19} | CHOICE | x | | m | | m | | - | | - | | m | | |
| 12 | n1 | {2 15 0 7 20} | INTEGER | x | | m | | m | | - | | - | | m | | |
| 13 | n2 | {2 15 0 7 21} | INTEGER | x | | m | | m | | - | | - | | m | | |
| 14 | "Rec. X.721 \| ISO/IEC 10165-2 : 1992": nameBinding | {2 9 3 2 7 63} | OBJECT IDENTIFIER | x | | m | | x | | - | | - | | x | | |
| 15 | "Rec. X.721 \| ISO/IEC 10165-2 : 1992": objectClass | {2 9 3 2 7 65} | ObjectClass | x | | m | | x | | - | | - | | x | | |
| 16 | "Rec. X.721 \| ISO/IEC 10165-2 : 1992": packages | {2 9 3 2 7 66} | SET OF OBJECT IDENTIFIER | c80 | | c81 | | c80 | | c80 | | c80 | | c80 | | |



Copyright International Organization for Standardization
Provided by IHS under license with ISO
No reproduction or networking permitted without license from IHS
Not for Resale

**Table G.43 (concluded) – sLPConnection Attribute support**

| | | | | Set by create | | Get | | Replace | | Add | | Remove | | Set to default | | |
|---|---|---|---|---|---|---|---|---|---|---|---|---|---|---|---|---|
| Index | Attribute template label | Value of object identifier for attribute | Constraints and values | Status | Support | Status | Support | Status | Support | Status | Support | Status | Support | Status | Support | Additional information |
| 17 | pollsReceived | {2 15 0 7 22} | INTEGER | x | | m | | c79 | | - | | - | | c79 | | |
| 18 | rEJsReceived | {2 15 0 7 5} | INTEGER | x | | m | | c79 | | - | | - | | c79 | | |
| 19 | rEJsSent | {2 15 0 7 6} | INTEGER | x | | m | | c79 | | - | | - | | c79 | | |
| 20 | rNRsReceived | {2 15 0 7 7} | INTEGER | x | | m | | c79 | | - | | - | | c79 | | |
| 21 | rNRsSent | {2 15 0 7 8} | INTEGER | x | | m | | c79 | | - | | - | | c79 | | |
| 22 | sABMsReceived | {2 15 0 7 9} | INTEGER | x | | m | | c79 | | - | | - | | c79 | | |
| 23 | sABMsSent | {2 15 0 7 10} | INTEGER | x | | m | | c79 | | - | | - | | c79 | | |
| 24 | sLPProtocolState | {2 15 0 7 23} | ENUMERATED | x | | m | | c79 | | - | | - | | c79 | | |
| 25 | sequenceModulus | {2 15 0 7 24} | INTEGER | x | | m | | m | | - | | - | | m | | |
| 26 | "CCITT Rec. X.723 (1993) \| ISO/IEC 10165-5 : 1993": supportedConnectionNames | {2 9 3 5 7 12} | SET OF ObjectInstance | c82 | | c83 | | c84 | | c84 | | c84 | | c84 | | |
| 27 | t1Timer | {2 15 0 7 25} | SEQUENCE | x | | m | | m | | - | | - | | m | | |
| 28 | t2Timer | {2 15 0 7 26} | SEQUENCE | x | | m | | m | | - | | - | | m | | |
| 29 | t3Timer | {2 15 0 7 27} | SEQUENCE | c85 | | c86 | | c86 | | - | | - | | c86 | | |
| 30 | t4Timer | {2 15 0 7 28} | SEQUENCE | x | | m | | m | | - | | - | | m | | |
| 31 | timesT1Expired | {2 15 0 7 29} | INTEGER | x | | m | | c79 | | - | | - | | c79 | | |
| 32 | timesT3Expired | {2 15 0 7 30} | INTEGER | c85 | | c86 | | c87 | | - | | - | | c87 | | |
| 33 | "CCITT Rec. X.723 (1993) \| ISO/IEC 10165-5 : 1993": underlyingConnectionNames | {2 9 3 5 7 14} | SET OF ObjectInstance | x | | m | | c79 | | c79 | | c79 | | c79 | | |

c77: if G.42/1a then x else -

c78: if G.42/1a then m else -

c79: if G.40/1b then x else -

c80: if G.42/3a then x else -

c81: if G.42/3a then m else -

c82: if G.42/6a then x else -

c83: if G.42/6a then m else -

c84: if G.40/1b and G.42/6a then x else -

c85: if G.42/7a then x else -

c86: if G.42/7a then m else -

c87: if G.40/1b and G.42/7a then x else -



Copyright International Organization for Standardization
Provided by IHS under license with ISO
No reproduction or networking permitted without license from IHS

Not for Resale

## G.12.4 Attribute group

**Table G.44 – sLPConnection Attribute group support**

| | | | | Get | | Set to default | | |
|---|---|---|---|---|---|---|---|---|
| Index | Attribute group template label | Value of object identifier for attribute group | Constraints and values | Status | Support | Status | Support | Additional information |
| 1 | "CCITT Rec. X.723 (1993) \| ISO/IEC 10165-5 : 1993": counters | {2 9 3 5 8 0} | fCSErrorsReceived<br>fRMRsReceived<br>fRMRsSent<br>iFrameDataOctetsReceived<br>iFrameDataOctetsSent<br>iFramesReceived<br>iFramesSent<br>pollsReceived<br>rEJsReceived<br>rEJsSent<br>rNRsReceived<br>rNRsSent<br>sABMsReceived<br>sABMsSent<br>timesT1Expired<br>timerT3Expired (condition) | m | | c79 | | |
| 2 | "Rec. X.721 \| ISO/IEC 10165-2 : 1992": state | {2 9 3 2 8 1} | sLPProtocolState | m | | c79 | | |
| 3 | timers | {2 15 0 8 1} | t1Timer<br>t2Timer<br>t4Timer<br>t3Timer (condition) | m | | m | | |

## G.12.5 Actions

**Table G.45 – sLPConnection Action support**

| Index | Action type template label | Value of object identifier for action type | Constraints and values | Status | Support | Additional information | Subindex | Action field name label | Constraints and values | Status | Support | Additional information |
|---|---|---|---|---|---|---|---|---|---|---|---|---|
| 1 | "CCITT Rec. X.723 (1993) \| ISO/IEC 10165-5 : 1993": deactivate | {2 9 3 5 9 1} | | m | | | 1.1 | ActionInfo | **Information Syntax** SET OF SEQUENCE | m | | |
| | | | | | | | 1.1.1 | identifier | OBJECT IDENTIFIER | m | | |
| | | | | | | | 1.1.2 | significance | BOOLEAN | o | | |
| | | | | | | | 1.1.3 | information | ANY DEFINED BY identifier | m | | |
| | | | | | | | 1.2 | ActionReply | **Reply Syntax** SET OF SEQUENCE | m | | |
| | | | | | | | 1.2.1 | identifier | OBJECT IDENTIFIER | m | | |
| | | | | | | | 1.2.2 | significance | BOOLEAN | o | | |
| | | | | | | | 1.2.3 | information | ANY DEFINED BY identifier | m | | |

## G.12.6 Notifications



Copyright International Organization for Standardization
Provided by IHS under license with ISO
No reproduction or networking permitted without license from IHS
Not for Resale

**Table G.46 – sLPConnection Notification support**

| Index | Notification type template label | Value of object identifier for notification type | Constraints and values | Status | Support: Confirmed | Support: Nonconfirmed | Additional information | Subindex | Notification field name label | Value of object identifier of attribute type associated with field | Constraints and values | Status | Support | Additional information |
|---|---|---|---|---|---|---|---|---|---|---|---|---|---|---|
| 1 | "Rec. X.721 \| ISO/IEC 10165-2 : 1992": communicationsAlarm | {2 9 3 2 10 2} | | m | | | fRMR | 1.1 | AlarmInfo | | **Information Syntax** SEQUENCE | m | | |
| | | | | | | | | 1.1.1 | probableCause | {2 9 3 2 7 18} | CHOICE | m | | |
| | | | | | | | | 1.1.1.1 | globalValue | - | OBJECT IDENTIFIER | o.1 | | |
| | | | | | | | | 1.1.1.2 | localValue | - | INTEGER | o.1 | | |
| | | | | | | | | 1.1.2 | specificProblems | {2 9 3 2 7 27} | SET OF CHOICE | o | | |
| | | | | | | | | 1.1.2.1 | OBJECT IDENTIFIER | - | OBJECT IDENTIFIER | c:o.2 | | |
| | | | | | | | | 1.1.2.2 | INTEGER | - | INTEGER | c:o.2 | | |
| | | | | | | | | 1.1.3 | perceivedSeverity | {2 9 3 2 7 17} | ENUMERATED | m | | |
| | | | | | | | | 1.1.4 | backedUpStatus | {2 9 3 2 7 11} | BOOLEAN | o | | |
| | | | | | | | | 1.1.5 | backUpObject | {2 9 3 2 7 40} | ObjectInstance | o | | |
| | | | | | | | | 1.1.6 | trendIndication | {2 9 3 2 7 30} | ENUMERATED | o | | |
| | | | | | | | | 1.1.7 | thresholdInfo | {2 9 3 2 7 29} | SEQUENCE | o | | |
| | | | | | | | | 1.1.7.1 | triggeredThreshold | - | AttributeId | c:m | | |
| | | | | | | | | 1.1.7.2 | observedValue | - | CHOICE | c:m | | |
| | | | | | | | | 1.1.7.2.1 | integer | - | INTEGER | c:o.3 | | |
| | | | | | | | | 1.1.7.2.2 | real | - | REAL | c:o.3 | | |
| | | | | | | | | 1.1.7.3 | thresholdLevel | - | CHOICE | c:o | | |
| | | | | | | | | 1.1.7.3.1 | up | - | SEQUENCE | c:o.4 | | |
| | | | | | | | | 1.1.7.3.1.1 | high | - | CHOICE | c:m | | |
| | | | | | | | | 1.1.7.3.1.1.1 | integer | - | INTEGER | c:o.5 | | |
| | | | | | | | | 1.1.7.3.1.1.2 | real | - | REAL | c:o.5 | | |
| | | | | | | | | 1.1.7.3.1.2 | low | - | CHOICE | c:o | | |
| | | | | | | | | 1.1.7.3.1.2.1 | integer | - | INTEGER | c:o.6 | | |
| | | | | | | | | 1.1.7.3.1.2.2 | real | - | REAL | c:o.6 | | |
| | | | | | | | | 1.1.7.3.2 | down | - | SEQUENCE | c:o.4 | | |
| | | | | | | | | 1.1.7.3.2.1 | high | - | CHOICE | c:m | | |
| | | | | | | | | 1.1.7.3.2.1.1 | integer | - | INTEGER | c:o.7 | | |
| | | | | | | | | 1.1.7.3.2.1.2 | real | - | REAL | c:o.7 | | |
| | | | | | | | | 1.1.7.3.2.2 | low | - | CHOICE | c:m | | |
| | | | | | | | | 1.1.7.3.2.2.1 | integer | - | INTEGER | c:o.8 | | |
| | | | | | | | | 1.1.7.3.2.2.2 | real | - | REAL | c:o.8 | | |
| | | | | | | | | 1.1.7.4 | armTime | - | GeneralizedTime | c:o | | |
| | | | | | | | | 1.1.8 | notificationIdentifier | {2 9 3 2 7 16} | INTEGER | o | | |
| | | | | | | | | 1.1.9 | correlatedNotifications | {2 9 3 2 7 12} | SET OF SEQUENCE | o | | |
| | | | | | | | | 1.1.9.1 | correlatedNotifications | {2 9 3 2 7 12} | SET OF INTEGER | c:m | | |
| | | | | | | | | 1.1.9.2 | sourceObjectInst | - | ObjectInstance | c:o | | |
| | | | | | | | | 1.1.10 | stateChangeDefinition | {2 9 3 2 7 28} | SET OF SEQUENCE | o | | |
| | | | | | | | | 1.1.10.1 | attributeID | - | AttributeId | c:m | | |
| | | | | | | | | 1.1.10.2 | oldAttributeValue | - | ANY DEFINED BY attributeID | c:o | | |



Copyright International Organization for Standardization
Provided by IHS under license with ISO
No reproduction or networking permitted without license from IHS
Not for Resale

**Table G.46 (concluded) – sLPConnection Notification support**

| Index | Notification type template label | Value of object identifier for notification type | Constraints and values | Status | Support: Confirmed | Support: Nonconfirmed | Additional information | Subindex | Notification field name label | Value of object identifier of attribute type associated with field | Constraints and values | Status | Support | Additional information |
|---|---|---|---|---|---|---|---|---|---|---|---|---|---|---|
| | | | | | | | | 1.1.10.3 | newAttributeValue | - | ANY DEFINED BY attributeID | c:m | | |
| | | | | | | | | 1.1.11 | monitoredAttributes | {2 9 3 2 7 15} | SET OF Attribute | o | | |
| | | | | | | | | 1.1.12 | proposedRepairActions | {2 9 3 2 7 19} | SET OF CHOICE | o | | |
| | | | | | | | | 1.1.12.1 | OBJECT IDENTIFIER | - | OBJECT IDENTIFIER | c:o.9 | | |
| | | | | | | | | 1.1.12.2 | INTEGER | - | INTEGER | c:o.9 | | |
| | | | | | | | | 1.1.13 | additionalText | {2 9 3 2 7 7} | GraphicString | o | | |
| | | | | | | | | 1.1.14 | additionalInformation | {2 9 3 2 7 6} | SET OF SEQUENCE | o | | |
| | | | | | | | | 1.1.14.1 | identifier | - | OBJECT IDENTIFIER | c:m | | |
| | | | | | | | | 1.1.14.2 | significance | - | BOOLEAN | c:o | | |
| | | | | | | | | 1.1.14.3 | information | - | ANY DEFINED BY identifier | c:m | | |
| 2 | "Rec. X.721 \| ISO/IEC 10165-2 : 1992": objectCreation | {2 9 3 2 10 6} | | m | | | | 2.1 | ObjectInfo | | **Information Syntax** SEQUENCE | m | | |
| | | | | | | | | 2.1.1 | sourceIndicator | {2 9 3 2 7 26} | ENUMERATED | o | | |
| | | | | | | | | 2.1.2 | attributeList | {2 9 3 2 7 9} | SET OF Attribute | o | | |
| | | | | | | | | 2.1.3 | notificationIdentifier | {2 9 3 2 7 16} | INTEGER | o | | |
| | | | | | | | | 2.1.4 | correlatedNotifications | {2 9 3 2 7 12} | SET OF SEQUENCE | o | | |
| | | | | | | | | 2.1.4.1 | correlatedNotifications | {2 9 3 2 7 12} | SET OF INTEGER | c:m | | |
| | | | | | | | | 2.1.4.2 | sourceObjectInst | - | ObjectInstance | c:o | | |
| | | | | | | | | 2.1.5 | additionalText | {2 9 3 2 7 7} | GraphicString | o | | |
| | | | | | | | | 2.1.6 | additionalInformation | {2 9 3 2 7 6} | SET OF SEQUENCE | o | | |
| | | | | | | | | 2.1.6.1 | identifier | - | OBJECT IDENTIFIER | c:m | | |
| | | | | | | | | 2.1.6.2 | significance | - | BOOLEAN | c:o | | |
| | | | | | | | | 2.1.6.3 | information | - | ANY DEFINED BY identifier | c:m | | |
| 3 | "Rec. X.721 \| ISO/IEC 10165-2 : 1992": objectDeletion | {2 9 3 2 10 7} | | m | | | | 3.1 | ObjectInfo | | **Information Syntax** SEQUENCE | m | | |
| | | | | | | | | 3.1.1 | sourceIndicator | {2 9 3 2 7 26} | ENUMERATED | o | | |
| | | | | | | | | 3.1.2 | attributeList | {2 9 3 2 7 9} | SET OF Attribute | o | | |
| | | | | | | | | 3.1.3 | notificationIdentifier | {2 9 3 2 7 16} | INTEGER | o | | |
| | | | | | | | | 3.1.4 | correlatedNotifications | {2 9 3 2 7 12} | SET OF SEQUENCE | o | | |
| | | | | | | | | 3.1.4.1 | correlatedNotifications | {2 9 3 2 7 12} | SET OF INTEGER | c:m | | |
| | | | | | | | | 3.1.4.2 | sourceObjectInst | - | ObjectInstance | c:o | | |
| | | | | | | | | 3.1.5 | additionalText | {2 9 3 2 7 7} | GraphicString | o | | |
| | | | | | | | | 3.1.6 | additionalInformation | {2 9 3 2 7 6} | SET OF SEQUENCE | o | | |
| | | | | | | | | 3.1.6.1 | identifier | - | OBJECT IDENTIFIER | c:m | | |
| | | | | | | | | 3.1.6.2 | significance | - | BOOLEAN | c:o | | |
| | | | | | | | | 3.1.6.3 | information | - | ANY DEFINED BY identifier | c:m | | |



Copyright International Organization for Standardization
Provided by IHS under license with ISO
No reproduction or networking permitted without license from IHS
Not for Resale

### G.12.7 Parameter

**Table G.47 – sLPConnection Parameter support**

| Index | Parameter template label | Value of object identifier for parameter | Constraints and values | Status | Support | Additional information |
|---|---|---|---|---|---|---|
| 1 | fRMR | {2 15 0 5 1} | EVENT-INFO communicationsAlarm | m | | |

## G.13 The LAPB Single Link Protocol Connection Initial Values managed object

### G.13.1 Statement of conformance to the managed object class

**Table G.48 – sLPConnectionIVMO Managed object class support**

| Index | Managed object class template label | Value of object identifier for class | Support of all mandatory features? (Y/N) | Is the actual class the same as the managed object class to which conformance is claimed? (Y/N) |
|---|---|---|---|---|
| 1 | sLPConnectionIVMO | {2 15 0 3 6} | | |

If the answer to the actual class question in the managed object class support table is no, the supplier of the implementation shall fill in the actual class support table below.

**Table G.49 – sLPConnectionIVMO Actual class support**

| Index | Managed object class template for actual class | Value of object identifier for managed object class definition of actual class | Additional information |
|---|---|---|---|
| | | | |
| | | | |

### G.13.2 Packages

The supplier of the implementation shall state whether or not the packages specified by this managed object of this class are supported, in Table G.50.

**Table G.50 – sLPConnectionIVMO Package support**

| Index | Package template label | Value of object identifier for package | Constraints and values | Status | Support | Additional information |
|---|---|---|---|---|---|---|
| 1 | "Rec. X.721 \| ISO/IEC 10165-2 : 1992": allomorphicPackage | {2 9 3 2 4 17} | "if an object supports allomorphism" | c88 | | |
| 2 | commonSLPConnection-P | | Mandatory | m | | |
| 3 | "Rec. X.721 \| ISO/IEC 10165-2 : 1992": packagesPackage | {2 9 3 2 4 16} | "any registered package, other than this package has been instantiated" | c89 | | |
| 4 | sLPConnectionIVMO-P | | Mandatory | m | | |
| 5 | t3IVMO-P | {2 15 0 4 3} | "optional Timer T3 of ISO 7776 is supported." | o | | |
| 6 | "Rec. X.721 \| ISO/IEC 10165-2 : 1992": topPackage | | Mandatory | m | | |

c88: if G.48/1b then - else m

c89: if G.50/1a or G.50/5a then m else -



Copyright International Organization for Standardization
Provided by IHS under license with ISO
No reproduction or networking permitted without license from IHS Not for Resale

### G.13.3 Attributes

The supplier of the implementation shall state whether or not the attributes specified by all of the packages instantiated in a managed object of this class are supported, in the Support and Additional information columns of Table G.51. The supplier of the implementation shall indicate support for each of the operations for each attribute supported.

**Table G.51 – sLPConnectionIVMO Attribute support**

| | | | | Set by create | | Get | | Replace | | Add | | Remove | | Set to default | | |
|---|---|---|---|---|---|---|---|---|---|---|---|---|---|---|---|---|
| Index | Attribute template label | Value of object identifier for attribute | Constraints and values | Status | Support | Status | Support | Status | Support | Status | Support | Status | Support | Status | Support | Additional information |
| 1 | "Rec. X.721 \| ISO/IEC 10165-2 : 1992": allomorphs | {2 9 3 2 7 50} | SET OF ObjectClass | c90 | | c91 | | - | | - | | - | | - | | |
| 2 | interfaceType | {2 15 0 7 18} | ENUMERATED | m | | m | | m | | - | | - | | m | | |
| 3 | k | {2 15 0 7 19} | CHOICE | m | | m | | m | | - | | - | | m | | |
| 4 | n1 | {2 15 0 7 20} | INTEGER | m | | m | | m | | - | | - | | m | | |
| 5 | n2 | {2 15 0 7 21} | INTEGER | m | | m | | m | | - | | - | | m | | |
| 6 | "Rec. X.721 \| ISO/IEC 10165-2 : 1992": nameBinding | {2 9 3 2 7 63} | OBJECT IDENTIFIER | o | | m | | x | | - | | - | | x | | |
| 7 | "Rec. X.721 \| ISO/IEC 10165-2 : 1992": objectClass | {2 9 3 2 7 65} | ObjectClass | m | | m | | x | | - | | - | | x | | |
| 8 | "Rec. X.721 \| ISO/IEC 10165-2 : 1992": packages | {2 9 3 2 7 66} | SET OF OBJECT IDENTIFIER | c92 | | c93 | | c94 | | c94 | | c94 | | c94 | | |
| 9 | sLPConnectionIVMOId | {2 15 0 7 31} | GraphicString | o | | m | | x | | - | | - | | x | | |
| 10 | sequenceModulus | {2 15 0 7 24} | INTEGER | m | | m | | m | | - | | - | | m | | |
| 11 | t1Timer | {2 15 0 7 25} | SEQUENCE | m | | m | | m | | - | | - | | m | | |
| 12 | t2Timer | {2 15 0 7 26} | SEQUENCE | m | | m | | m | | - | | - | | m | | |
| 13 | t3Timer | {2 15 0 7 27} | SEQUENCE | c95 | | c95 | | c95 | | - | | - | | c95 | | |
| 14 | t4Timer | {2 15 0 7 28} | SEQUENCE | m | | m | | m | | - | | - | | m | | |

c90: if G.50/1a then o else -

c91: if G.50/1a then m else -

c92: if G.50/3a then o else -

c93: if G.50/3a then m else -

c94: if G.48/1b and G.50/3a then x else -

c95: if G.50/5a then m else -

### G.13.4 Attribute group

**Table G.52 – sLPConnectionIVMO Attribute group support**

| | | | | Get | | Set to default | | |
|---|---|---|---|---|---|---|---|---|
| Index | Attribute group template label | Value of object identifier for attribute group | Constraints and values | Status | Support | Status | Support | Additional information |
| 1 | timers | {2 15 0 8 1} | t1Timer<br>t2Timer<br>t4Timer<br>t3Timer (condition) | m | | m | | |



Copyright International Organization for Standardization
Provided by IHS under license with ISO
No reproduction or networking permitted without license from IHS Not for Resale

## G.13.5 Notifications

**Table G.53 – sLPConnectionIVMO Notification support**

| Index | Notification type template label | Value of object identifier for notification type | Constraints and values | Status | Support: Confirmed | Support: Nonconfirmed | Additional information | Subindex | Notification field name label | Value of object identifier of attribute type associated with field | Constraints and values | Status | Support | Additional information |
|---|---|---|---|---|---|---|---|---|---|---|---|---|---|---|
| 1 | "Rec. X.721 \| ISO/IEC 10165-2 : 1992": objectCreation | {2 9 3 2 10 6} | | m | | | | 1.1 | ObjectInfo | | **Information Syntax** SEQUENCE | m | | |
| | | | | | | | | 1.1.1 | sourceIndicator | {2 9 3 2 7 26} | ENUMERATED | o | | |
| | | | | | | | | 1.1.2 | attributeList | {2 9 3 2 7 9} | SET OF Attribute | o | | |
| | | | | | | | | 1.1.3 | notificationIdentifier | {2 9 3 2 7 16} | INTEGER | o | | |
| | | | | | | | | 1.1.4 | correlatedNotifications | {2 9 3 2 7 12} | SET OF SEQUENCE | o | | |
| | | | | | | | | 1.1.4.1 | correlatedNotifications | {2 9 3 2 7 12} | SET OF INTEGER | c:m | | |
| | | | | | | | | 1.1.4.2 | sourceObjectInst | - | ObjectInstance | c:o | | |
| | | | | | | | | 1.1.5 | additionalText | {2 9 3 2 7 7} | GraphicString | o | | |
| | | | | | | | | 1.1.6 | additionalInformation | {2 9 3 2 7 6} | SET OF SEQUENCE | o | | |
| | | | | | | | | 1.1.6.1 | identifier | - | OBJECT IDENTIFIER | c:m | | |
| | | | | | | | | 1.1.6.2 | significance | - | BOOLEAN | c:o | | |
| | | | | | | | | 1.1.6.3 | information | - | ANY DEFINED BY identifier | c:m | | |
| 2 | "Rec. X.721 \| ISO/IEC 10165-2 : 1992": objectDeletion | {2 9 3 2 10 7} | | m | | | | 2.1 | *ObjectInfo* | | **Information Syntax** SEQUENCE | m | | |
| | | | | | | | | 2.1.1 | sourceIndicator | {2 9 3 2 7 26} | ENUMERATED | o | | |
| | | | | | | | | 2.1.2 | attributeList | {2 9 3 2 7 9} | SET OF Attribute | o | | |
| | | | | | | | | 2.1.3 | notificationIdentifier | {2 9 3 2 7 16} | INTEGER | o | | |
| | | | | | | | | 2.1.4 | correlatedNotifications | {2 9 3 2 7 12} | SET OF SEQUENCE | o | | |
| | | | | | | | | 2.1.4.1 | correlatedNotifications | {2 9 3 2 7 12} | SET OF INTEGER | c:m | | |
| | | | | | | | | 2.1.4.2 | sourceObjectInst | - | ObjectInstance | c:o | | |
| | | | | | | | | 2.1.5 | additionalText | {2 9 3 2 7 7} | GraphicString | o | | |
| | | | | | | | | 2.1.6 | additionalInformation | {2 9 3 2 7 6} | SET OF SEQUENCE | o | | |
| | | | | | | | | 2.1.6.1 | identifier | - | OBJECT IDENTIFIER | c:m | | |
| | | | | | | | | 2.1.6.2 | significance | - | BOOLEAN | c:o | | |
| | | | | | | | | 2.1.6.3 | information | - | ANY DEFINED BY identifier | c:m | | |



Copyright International Organization for Standardization
Provided by IHS under license with ISO
No reproduction or networking permitted without license from IHS

Not for Resale

## G.14 The LAPB Single Link Protocol Machine managed object

### G.14.1 Statement of conformance to the managed object class

**Table G.54 – sLPPM Managed object class support**

| Index | Managed object class template label | Value of object identifier for class | Support of all mandatory features? (Y/N) | Is the actual class the same as the managed object class to which conformance is claimed? (Y/N) |
|---|---|---|---|---|
| 1 | sLPPM | {2 15 0 3 4} | | |

If the answer to the actual class question in the managed object class support table is no, the supplier of the implementation shall fill in the actual class support table below.

**Table G.55 – sLPPM Actual class support**

| Index | Managed object class template for actual class | Value of object identifier for managed object class definition of actual class | Additional information |
|---|---|---|---|
| | | | |
| | | | |

### G.14.2 Packages

The supplier of the implementation shall state whether or not the packages specified by this managed object of this class are supported, in Table G.56.

**Table G.56 – sLPPM Package support**

| Index | Package template label | Value of object identifier for package | Constraints and values | Status | Support | Additional information |
|---|---|---|---|---|---|---|
| 1 | "Rec. X.721 \| ISO/IEC 10165-2 : 1992": allomorphicPackage | {2 9 3 2 4 17} | "if an object supports allomorphism" | c96 | | |
| 2 | "CCITT Rec. X.723 (1993) \| ISO/IEC 10165-5 : 1993": coProtocolMachineP1 | | Mandatory | m | | |
| 3 | "Rec. X.721 \| ISO/IEC 10165-2 : 1992": packagesPackage | {2 9 3 2 4 16} | "any registered package, other than this package has been instantiated" | c97 | | |
| 4 | sLPPM-P | | Mandatory | m | | |
| 5 | "Rec. X.721 \| ISO/IEC 10165-2 : 1992": topPackage | | Mandatory | m | | |

c96: if G.54/1b then - else m

c97: if G.56/1a then m else -



Copyright International Organization for Standardization
Provided by IHS under license with ISO
No reproduction or networking permitted without license from IHS
Not for Resale

### G.14.3 Attributes

The supplier of the implementation shall state whether or not the attributes specified by all of the packages instantiated in a managed object of this class are supported, in the Support and Additional information columns of Table G.57. The supplier of the implementation shall indicate support for each of the operations for each attribute supported.

**Table G.57 – sLPPM Attribute support**

| | | | | Set by create | | Get | | Replace | | Add | | Remove | | Set to default | | |
|---|---|---|---|---|---|---|---|---|---|---|---|---|---|---|---|---|
| Index | Attribute template label | Value of object identifier for attribute | Constraints and values | Status | Support | Status | Support | Status | Support | Status | Support | Status | Support | Status | Support | Additional information |
| 1 | "Rec. X.721 \| ISO/IEC 10165-2 : 1992": allomorphs | {2 9 3 2 7 50} | SET OF ObjectClass | c98 | | c99 | | - | | - | | - | | - | | |
| 2 | "CCITT Rec. X.723 (1993) \| ISO/IEC 10165-5 : 1993": coProtocolMachineId | {2 9 3 5 7 3} | GraphicString | c100 | | m | | x | | - | | - | | x | | |
| 3 | "Rec. X.721 \| ISO/IEC 10165-2 : 1992": nameBinding | {2 9 3 2 7 63} | OBJECT IDENTIFIER | c100 | | m | | x | | - | | - | | x | | |
| 4 | "Rec. X.721 \| ISO/IEC 10165-2 : 1992": objectClass | {2 9 3 2 7 65} | ObjectClass | c101 | | m | | x | | - | | - | | x | | |
| 5 | "Rec. X.721 \| ISO/IEC 10165-2 : 1992": operationalState | {2 9 3 2 7 35} | ENUMERATED | x | | m | | x | | - | | - | | x | | |
| 6 | "Rec. X.721 \| ISO/IEC 10165-2 : 1992": packages | {2 9 3 2 7 66} | SET OF OBJECT IDENTIFIER | c102 | | c103 | | c104 | | c104 | | c104 | | c104 | | |

c98: if G.56/1a then (if H.1/20a then o else x) else -

c99: if G.56/1a then m else -

c100: if H.1/20a then o else x

c101: if H.1/20a then m else x

c102: if G.56/3a then (if H.1/20a then o else x) else -

c103: if G.56/3a then m else -

c104: if G.54/1b and G.56/3a then x else -

### G.14.4 Attribute group

**Table G.58 – sLPPM Attribute group support**

| | | | | Get | | Set to default | | |
|---|---|---|---|---|---|---|---|---|
| Index | Attribute group template label | Value of object identifier for attribute group | Constraints and values | Status | Support | Status | Support | Additional information |
| 1 | "Rec. X.721 \| ISO/IEC 10165-2 : 1992": state | {2 9 3 2 8 1} | "Rec. X.721 \| ISO/IEC 10165-2 : 1992": operationalState | m | | c105 | | |

c105: if G.54/1b then x else -



Copyright International Organization for Standardization
Provided by IHS under license with ISO
No reproduction or networking permitted without license from IHS
Not for Resale

4851903 0668022 136



## G.14.5 Actions

**Table G.59 – sLPPM Action support**

| Index | Action type template label | Value of object identifier for action type | Constraints and values | Status | Support | Additional information | Subindex | Action field name label | Constraints and values | Status | Support | Additional information |
|---|---|---|---|---|---|---|---|---|---|---|---|---|
| 1 | "CCITT Rec. X.723 (1993) \| ISO/IEC 10165-5 : 1993": activate | {2 9 3 5 9 0} | | m | | | 1.1 | ActionInfo | **Information Syntax** SET OF SEQUENCE | m | | |
| | | | | | | | 1.1.1 | identifier | OBJECT IDENTIFIER | m | | |
| | | | | | | | 1.1.2 | significance | BOOLEAN | o | | |
| | | | | | | | 1.1.3 | information | ANY DEFINED BY identifier | m | | |
| | | | | | | | 1.2 | ActionReply | **Reply Syntax** SET OF SEQUENCE | m | | |
| | | | | | | | 1.2.1 | identifier | OBJECT IDENTIFIER | m | | |
| | | | | | | | 1.2.2 | significance | BOOLEAN | o | | |
| | | | | | | | 1.2.3 | information | ANY DEFINED BY identifier | m | | |
| 2 | "CCITT Rec. X.723 (1993) \| ISO/IEC 10165-5 : 1993": deactivate | {2 9 3 5 9 1} | | m | | | 2.1 | ActionInfo | **Information Syntax** SET OF SEQUENCE | m | | |
| | | | | | | | 2.1.1 | identifier | OBJECT IDENTIFIER | m | | |
| | | | | | | | 2.1.2 | significance | BOOLEAN | o | | |
| | | | | | | | 2.1.3 | information | ANY DEFINED BY identifier | m | | |
| | | | | | | | 2.2 | ActionReply | **Reply Syntax** SET OF SEQUENCE | m | | |
| | | | | | | | 2.2.1 | identifier | OBJECT IDENTIFIER | m | | |
| | | | | | | | 2.2.2 | significance | BOOLEAN | o | | |
| | | | | | | | 2.2.3 | information | ANY DEFINED BY identifier | m | | |

## G.14.6 Notifications

**Table G.60 – sLPPM Notification support**

| Index | Notification type template label | Value of object identifier for notification type | Constraints and values | Status | Support: Confirmed | Support: Nonconfirmed | Additional information | Subindex | Notification field name label | Value of object identifier of attribute type associated with field | Constraints and values | Status | Support | Additional information |
|---|---|---|---|---|---|---|---|---|---|---|---|---|---|---|
| 1 | "Rec. X.721 \| ISO/IEC 10165-2 : 1992": objectCreation | {2 9 3 2 10 6} | | m | | | | 1.1 | ObjectInfo | | **Information Syntax** SEQUENCE | m | | |
| | | | | | | | | 1.1.1 | sourceIndicator | {2 9 3 2 7 26} | ENUMERATED | o | | |
| | | | | | | | | 1.1.2 | attributeList | {2 9 3 2 7 9} | SET OF Attribute | o | | |
| | | | | | | | | 1.1.3 | notificationIdentifier | {2 9 3 2 7 16} | INTEGER | o | | |
| | | | | | | | | 1.1.4 | correlatedNotifications | {2 9 3 2 7 12} | SET OF SEQUENCE | o | | |
| | | | | | | | | 1.1.4.1 | correlatedNotifications | {2 9 3 2 7 12} | SET OF INTEGER | c:m | | |
| | | | | | | | | 1.1.4.2 | sourceObjectInst | - | ObjectInstance | c:o | | |



Copyright International Organization for Standardization
Provided by IHS under license with ISO
No reproduction or networking permitted without license from IHS
Not for Resale

**Table G.60 (concluded) – sLPPM Notification support**

| Index | *Notification type template* label | *Value of* object identifier for notification type | Constraints and values | Status | Support: Confirmed | Support: Non-confirmed | Additional information | Subindex | Notification field name label | Value of object identifier of attribute type associated with field | Constraints and values | Status | Support | Additional information |
|---|---|---|---|---|---|---|---|---|---|---|---|---|---|---|
| | | | | | | | | 1.1.5 | additionalText | {2 9 3 2 7 7} | GraphicString | o | | |
| | | | | | | | | 1.1.6 | additionalInformation | {2 9 3 2 7 6} | SET OF SEQUENCE | o | | |
| | | | | | | | | 1.1.6.1 | identifier | - | OBJECT IDENTIFIER | c:m | | |
| | | | | | | | | 1.1.6.2 | significance | - | BOOLEAN | c:o | | |
| | | | | | | | | 1.1.6.3 | information | - | ANY DEFINED BY identifier | c:m | | |
| 2 | "Rec. X.721 \| ISO/IEC 10165-2 : 1992": objectDeletion | {2 9 3 2 10 7} | | m | | | | 2.1 | ObjectInfo | | **Information Syntax** SEQUENCE | m | | |
| | | | | | | | | 2.1.1 | sourceIndicator | {2 9 3 2 7 26} | ENUMERATED | o | | |
| | | | | | | | | 2.1.2 | attributeList | {2 9 3 2 7 9} | SET OF Attribute | o | | |
| | | | | | | | | 2.1.3 | notificationIdentifier | {2 9 3 2 7 16} | INTEGER | o | | |
| | | | | | | | | 2.1.4 | correlatedNotifications | {2 9 3 2 7 12} | SET OF SEQUENCE | o | | |
| | | | | | | | | 2.1.4.1 | correlatedNotifications | {2 9 3 2 7 12} | SET OF INTEGER | c:m | | |
| | | | | | | | | 2.1.4.2 | sourceObjectInst | - | ObjectInstance | c:o | | |
| | | | | | | | | 2.1.5 | additionalText | {2 9 3 2 7 7} | GraphicString | o | | |
| | | | | | | | | 2.1.6 | additionalInformation | {2 9 3 2 7 6} | SET OF SEQUENCE | o | | |
| | | | | | | | | 2.1.6.1 | identifier | - | OBJECT IDENTIFIER | c:m | | |
| | | | | | | | | 2.1.6.2 | significance | - | BOOLEAN | c:o | | |
| | | | | | | | | 2.1.6.3 | information | - | ANY DEFINED BY identifier | c:m | | |
| 3 | "Rec. X.721 \| ISO/IEC 10165-2 : 1992": stateChange | {2 9 3 2 10 14} | | m | | | | 3.1 | *StateChangeInfo* | | **Information Syntax** SEQUENCE | m | | |
| | | | | | | | | 3.1.1 | sourceIndicator | {2 9 3 2 7 26} | ENUMERATED | o | | |
| | | | | | | | | 3.1.2 | attributeIdentifierList | {2 9 3 2 7 8} | SET OF AttributeId | o | | |
| | | | | | | | | 3.1.3 | *stateChangeDefinition* | {2 9 3 2 7 28} | SET OF SEQUENCE | *m* | | |
| | | | | | | | | 3.1.3.1 | attributeID | - | AttributeId | m | | |
| | | | | | | | | 3.1.3.2 | oldAttributeValue | - | ANY DEFINED BY attributeID | o | | |
| | | | | | | | | 3.1.3.3 | newAttributeValue | - | ANY DEFINED BY attributeID | m | | |
| | | | | | | | | 3.1.4 | notificationIdentifier | {2 9 3 2 7 16} | INTEGER | o | | |
| | | | | | | | | 3.1.5 | *correlatedNotifications* | {2 9 3 2 7 12} | SET OF SEQUENCE | o | | |
| | | | | | | | | 3.1.5.1 | correlatedNotifications | {2 9 3 2 7 12} | SET OF INTEGER | c:m | | |
| | | | | | | | | 3.1.5.2 | sourceObjectInst | - | ObjectInstance | c:o | | |
| | | | | | | | | 3.1.6 | additionalText | {2 9 3 2 7 7} | GraphicString | o | | |
| | | | | | | | | 3.1.7 | additionalInformation | {2 9 3 2 7 6} | SET OF SEQUENCE | o | | |
| | | | | | | | | 3.1.7.1 | identifier | - | OBJECT IDENTIFIER | c:m | | |
| | | | | | | | | 3.1.7.2 | significance | - | BOOLEAN | c:o | | |
| | | | | | | | | 3.1.7.3 | information | - | ANY DEFINED BY identifier | c:m | | |



Copyright International Organization for Standardization
Provided by IHS under license with ISO
No reproduction or networking permitted without license from IHS
Not for Resale

# Annex H
(normative)

# MRCS proforma for name binding[1)]

## H.1 Introduction

The purpose of this MRCS proforma for name bindings is to provide a mechanism for a supplier which claims conformance to a name binding to provide conformance information in a standard form.

## H.2 Instructions for completing the MRCS proforma for name binding to produce a MRCS[2)]

The supplier of the implementation shall state which items are supported in the tables below and if necessary provide additional information.

## H.3 Statement of conformance to the name binding

**Table H.1 – Name Binding support**

| Index | Name binding template label | Value of object identifier for name binding | Constraints and values | Status | Support | Additional information | Subindex | Operation | Constraints and values | Status | Support | Additional information |
|---|---|---|---|---|---|---|---|---|---|---|---|---|
| 1 | dLSAP-datalinkEntity-Management | {2 15 0 6 2} | Superior class: datalinkEntity AND SUBCLASSES | o | | | 1.1 | Create support | | m | | |
| | | | | | | | 1.2 | Create with reference object | | - | | |
| | | | | | | | 1.3 | Create with automatic instance naming | | - | | |
| | | | | | | | 1.4 | Delete support | | m | | |
| | | | | | | | 1.5 | Delete only if no contained objects | | m | | |
| | | | | | | | 1.6 | Delete contained objects | | x | | |
| 2 | "CCITT Rec. X.723 (1993) \| ISO/IEC 10165-5 : 1993": sap1-communicationsEntity | {2 9 3 5 6 3} | Superior class: "CCITT Rec. X.723 (1993) \| ISO/IEC 10165-5 : 1993": communicationsEntity AND SUBCLASSES | o | | | 2.1 | Create support | | x | | |
| | | | | | | | 2.2 | Create with reference object | | - | | |
| | | | | | | | 2.3 | Create with automatic instance naming | | - | | |
| | | | | | | | 2.4 | Delete support | | x | | |
| | | | | | | | 2.5 | Delete only if no contained objects | | - | | |
| | | | | | | | 2.6 | Delete contained objects | | - | | |
| 3 | datalinkEntity-datalinkSubsystem-Management | {2 15 0 6 1} | Superior class: datalinkSubsystem AND SUBCLASSES | o | | | 3.1 | Create support | | m | | |
| | | | | | | | 3.2 | Create with reference object | | - | | |
| | | | | | | | 3.3 | Create with automatic instance naming | | - | | |
| | | | | | | | 3.4 | Delete support | | m | | |

1) Users of this International Standard may freely reproduce the MRCS proforma in this Annex so that it can be used for its intended purpose, and may further publish the completed MRCS.

2) Instructions for MRCS proforma are found in ITU-T Rec.X.724 | ISO/IEC 10165-6 Clause 5.



Copyright International Organization for Standardization
Provided by IHS under license with ISO
No reproduction or networking permitted without license from IHS
Not for Resale

**Table H.1 (continued) – Name Binding support**

| Index | Name binding template label | Value of object identifier for name binding | Constraints and values | Status | Support | Additional information | Subindex | Operation | Constraints and values | Status | Support | Additional information |
|---|---|---|---|---|---|---|---|---|---|---|---|---|
| | | | | | | | 3.5 | Delete only if no contained objects | | m | | |
| | | | | | | | 3.6 | Delete contained objects | | x | | |
| 4 | "CCITT Rec. X.723 (1993) \| ISO/IEC 10165-5 : 1993": communicationsEntity-subsystem | {2 9 3 5 6 1} | Superior class: "CCITT Rec. X.723 (1993) \| ISO/IEC 10165-5 : 1993": subsystem AND SUBCLASSES | o | | | 4.1 | Create support | | x | | |
| | | | | | | | 4.2 | Create with reference object | | - | | |
| | | | | | | | 4.3 | Create with automatic instance naming | | - | | |
| | | | | | | | 4.4 | Delete support | | x | | |
| | | | | | | | 4.5 | Delete only if no contained objects | | - | | |
| | | | | | | | 4.6 | Delete contained objects | | - | | |
| 5 | "CCITT Rec. X.723 (1993) \| ISO/IEC 10165-5 : 1993": subsystem-system | {2 9 3 5 6 6} | Superior class: "Rec. X.721 \| ISO/IEC 10165-2 : 1992": system AND SUBCLASSES | o | | | 5.1 | Create support | | x | | |
| | | | | | | | 5.2 | Create with reference object | | - | | |
| | | | | | | | 5.3 | Create with automatic instance naming | | - | | |
| | | | | | | | 5.4 | Delete support | | x | | |
| | | | | | | | 5.5 | Delete only if no contained objects | | - | | |
| | | | | | | | 5.6 | Delete contained objects | | - | | |
| 6 | eWMAMetricMonitor-ILCDLE-Management | {2 15 0 6 13} | Superior class: ILCDLE AND SUBCLASSES | o | | | 6.1 | Create support | | m | | |
| | | | | | | | 6.2 | Create with reference object | | m | | |
| | | | | | | | 6.3 | Create with automatic instance naming | | m | | |
| | | | | | | | 6.4 | Delete support | | m | | |
| | | | | | | | 6.5 | Delete only if no contained objects | | m | | |
| | | | | | | | 6.6 | Delete contained objects | | x | | |
| 7 | eWMAMetricMonitor-mACDLE-Management | {2 15 0 6 14} | Superior class: mACDLE AND SUBCLASSES | o | | | 7.1 | Create support | | m | | |
| | | | | | | | 7.2 | Create with reference object | | m | | |
| | | | | | | | 7.3 | Create with automatic instance naming | | m | | |
| | | | | | | | 7.4 | Delete support | | m | | |
| | | | | | | | 7.5 | Delete only if no contained objects | | m | | |
| | | | | | | | 7.6 | Delete contained objects | | x | | |
| 8 | ILCCLPM-ILCDLE-Management | {2 15 0 6 9} | Superior class: ILCDLE AND SUBCLASSES | o | | | 8.1 | Create support | | m | | |
| | | | | | | | 8.2 | Create with reference object | | - | | |
| | | | | | | | 8.3 | Create with automatic instance naming | | - | | |
| | | | | | | | 8.4 | Delete support | | m | | |



Copyright International Organization for Standardization
Provided by IHS under license with ISO
No reproduction or networking permitted without license from IHS
Not for Resale

**Table H.1 (continued) – Name Binding support**

| Index | Name binding template label | Value of object identifier for name binding | Constraints and values | Status | Support | Additional information | Subindex | Operation | Constraints and values | Status | Support | Additional information |
|---|---|---|---|---|---|---|---|---|---|---|---|---|
| | | | | | | | 8.5 | Delete only if no contained objects | | m | | |
| | | | | | | | 8.6 | Delete contained objects | | x | | |
| 9 | "CCITT Rec. X.723 (1993) \| ISO/IEC 10165-5 : 1993": clProtocolMachine-entity | {2 9 3 5 6 0} | Superior class: "CCITT Rec. X.723 (1993) \| ISO/IEC 10165-5 : 1993": communicationsEntity AND SUBCLASSES | o | | | 9.1 | Create support | | x | | |
| | | | | | | | 9.2 | Create with reference object | | - | | |
| | | | | | | | 9.3 | Create with automatic instance naming | | - | | |
| | | | | | | | 9.4 | Delete support | | x | | |
| | | | | | | | 9.5 | Delete only if no contained objects | | - | | |
| | | | | | | | 9.6 | Delete contained objects | | - | | |
| 10 | ILCCOPM-ILCDLE-Management | {2 15 0 6 10} | Superior class: ILCDLE AND SUBCLASSES | o | | | 10.1 | Create support | | m | | |
| | | | | | | | 10.2 | Create with reference object | | - | | |
| | | | | | | | 10.3 | Create with automatic instance naming | | - | | |
| | | | | | | | 10.4 | Delete support | | m | | |
| | | | | | | | 10.5 | Delete only if no contained objects | | m | | |
| | | | | | | | 10.6 | Delete contained objects | | x | | |
| 11 | "CCITT Rec. X.723 (1993) \| ISO/IEC 10165-5 : 1993": coProtocolMachine-entity | {2 9 3 5 6 2} | Superior class: "CCITT Rec. X.723 (1993) \| ISO/IEC 10165-5 : 1993": communicationsEntity AND SUBCLASSES | o | | | 11.1 | Create support | | x | | |
| | | | | | | | 11.2 | Create with reference object | | - | | |
| | | | | | | | 11.3 | Create with automatic instance naming | | - | | |
| | | | | | | | 11.4 | Delete support | | x | | |
| | | | | | | | 11.5 | Delete only if no contained objects | | - | | |
| | | | | | | | 11.6 | Delete contained objects | | - | | |
| 12 | mAC-mACDLE-Automatic | {2 15 0 6 7} | Superior class: mACDLE AND SUBCLASSES | o | | | 12.1 | Create support | | x | | |
| | | | | | | | 12.2 | Create with reference object | | - | | |
| | | | | | | | 12.3 | Create with automatic instance naming | | - | | |
| | | | | | | | 12.4 | Delete support | | x | | |
| | | | | | | | 12.5 | Delete only if no contained objects | | - | | |
| | | | | | | | 12.6 | Delete contained objects | | - | | |
| 13 | mAC-mACDLE-Management | {2 15 0 6 8} | Superior class: mACDLE AND SUBCLASSES | o | | | 13.1 | Create support | | m | | |
| | | | | | | | 13.2 | Create with reference object | | - | | |
| | | | | | | | 13.3 | Create with automatic instance naming | | - | | |
| | | | | | | | 13.4 | Delete support | | m | | |



Copyright International Organization for Standardization
Provided by IHS under license with ISO
No reproduction or networking permitted without license from IHS Not for Resale

**Table H.1 (continued) – Name Binding support**

| Index | Name binding template label | Value of object identifier for name binding | Constraints and values | Status | Support | Additional information | Subindex | Operation | Constraints and values | Status | Support | Additional information |
|---|---|---|---|---|---|---|---|---|---|---|---|---|
| | | | | | | | 13.5 | Delete only if no contained objects | | m | | |
| | | | | | | | 13.6 | Delete contained objects | | x | | |
| 14 | resourceTypeId-ILCDLE-Automatic | {2 15 0 6 11} | Superior class: ILCDLE AND SUBCLASSES | o | | | 14.1 | Create support | | x | | |
| | | | | | | | 14.2 | Create with reference object | | - | | |
| | | | | | | | 14.3 | Create with automatic instance naming | | - | | |
| | | | | | | | 14.4 | Delete support | | x | | |
| | | | | | | | 14.5 | Delete only if no contained objects | | - | | |
| | | | | | | | 14.6 | Delete contained objects | | - | | |
| 15 | resourceTypeId-mACDLE-Automatic | {2 15 0 6 12} | Superior class: mACDLE AND SUBCLASSES | o | | | 15.1 | Create support | | x | | |
| | | | | | | | 15.2 | Create with reference object | | - | | |
| | | | | | | | 15.3 | Create with automatic instance naming | | - | | |
| | | | | | | | 15.4 | Delete support | | x | | |
| | | | | | | | 15.5 | Delete only if no contained objects | | - | | |
| | | | | | | | 15.6 | Delete contained objects | | - | | |
| 16 | sLPConnection-sLPPM-Automatic | {2 15 0 6 4} | Superior class: sLPPM AND SUBCLASSES | o | | | 16.1 | Create support | | x | | |
| | | | | | | | 16.2 | Create with reference object | | - | | |
| | | | | | | | 16.3 | Create with automatic instance naming | | - | | |
| | | | | | | | 16.4 | Delete support | | x | | |
| | | | | | | | 16.5 | Delete only if no contained objects | | - | | |
| | | | | | | | 16.6 | Delete contained objects | | - | | |
| 17 | sLPConnection-sLPPM-Management | {2 15 0 6 5} | Superior class: sLPPM AND SUBCLASSES | o | | | 17.1 | Create support | | x | | |
| | | | | | | | 17.2 | Create with reference object | | - | | |
| | | | | | | | 17.3 | Create with automatic instance naming | | - | | |
| | | | | | | | 17.4 | Delete support | | m | | |
| | | | | | | | 17.5 | Delete only if no contained objects | | m | | |
| | | | | | | | 17.6 | Delete contained objects | | x | | |
| 18 | "CCITT Rec. X.723 (1993) \| ISO/IEC 10165-5 : 1993": singlePeerConnection-coProtocolMachine | {2 9 3 5 6 5} | Superior class: "CCITT Rec. X.723 (1993) \| ISO/IEC 10165-5 : 1993": coProtocolMachine AND SUBCLASSES | o | | | 18.1 | Create support | | x | | |
| | | | | | | | 18.2 | Create with reference object | | - | | |
| | | | | | | | 18.3 | Create with automatic instance naming | | - | | |
| | | | | | | | 18.4 | Delete support | | x | | |



Copyright International Organization for Standardization
Provided by IHS under license with ISO
No reproduction or networking permitted without license from IHS
Not for Resale

**Table H.1 (concluded) – Name Binding support**

| Index | Name binding template label | Value of object identifier for name binding | Constraints and values | Status | Support | Additional information | Subindex | Operation | Constraints and values | Status | Support | Additional information |
|---|---|---|---|---|---|---|---|---|---|---|---|---|
| | | | | | | | 18.5 | Delete only if no contained objects | | - | | |
| | | | | | | | 18.6 | Delete contained objects | | - | | |
| 19 | sLPConnectionIVMO-sLPPM-Management | {2 15 0 6 6} | Superior class: sLPPM AND SUBCLASSES | o | | | 19.1 | Create support | | m | | |
| | | | | | | | 19.2 | Create with reference object | | - | | |
| | | | | | | | 19.3 | Create with automatic instance naming | | - | | |
| | | | | | | | 19.4 | Delete support | | m | | |
| | | | | | | | 19.5 | Delete only if no contained objects | | m | | |
| | | | | | | | 19.6 | Delete contained objects | | x | | |
| 20 | sLPPM-IAPBDLE-Management | {2 15 0 6 3} | Superior class: IAPBDLE AND SUBCLASSES | o | | | 20.1 | Create support | | m | | |
| | | | | | | | 20.2 | Create with reference object | | - | | |
| | | | | | | | 20.3 | Create with automatic instance naming | | - | | |
| | | | | | | | 20.4 | Delete support | | m | | |
| | | | | | | | 20.5 | Delete only if no contained objects | | m | | |
| | | | | | | | 20.6 | Delete contained objects | | x | | |



Copyright International Organization for Standardization
Provided by IHS under license with ISO
No reproduction or networking permitted without license from IHS
Not for Resale

© ISO/IEC

**ICS 35.100.20**

**Descriptors:** data processing, information interchange, telecommunications, network interconnection, open systems interconnection, data link layer, management, information.

Price based on 65 pages

Copyright International Organization for Standardization
Provided by IHS under license with ISO
No reproduction or networking permitted without license from IHS

Not for Resale

4851903 0636023 593

# INTERNATIONAL STANDARD

# ISO/IEC 10742

First edition
1994-08-01

**AMENDMENT 1**
1995-11-15

# Information technology — Telecommunications and information exchange between systems — Elements of management information related to OSI Data Link Layer standards

## AMENDMENT 1: Addition of DCE conditions and new attributes

*Technologies de l'information — Télécommunications et échange d'information entre systèmes — Éléments d'information de gestion concernant les normes de la couche de liaison de données OSI*

*AMENDEMENT 1: Addition de conditions DCE et de nouveaux atrtributs*




Reference number
ISO/IEC 10742:1994/Amd.1:1995(E)

Copyright International Organization for Standardization
Provided by IHS under license with ISO
No reproduction or networking permitted without license from IHS

Not for Resale

# Foreword

ISO (the International Organization for Standardization) and IEC (the International Electrotechnical Commission) form the specialized system for worldwide standardization. National bodies that are members of ISO or IEC participate in the development of International Standards through technical committees established by the respective organization to deal with particular fields of technical activity. ISO and IEC technical committees collaborate in fields of mutual interest. Other international organizations, governmental and non-governmental, in liaison with ISO and IEC, also take part in the work.

In the field of information technology, ISO and IEC have established a joint technical committee, ISO/IEC JTC 1. Draft International Standards adopted by the joint technical committee are circulated to national bodies for voting. Publication as an International Standard requires approval by at least 75 % of the national bodies casting a vote.

Amendment 1 to International Standard ISO/IEC 10742:1994 was prepared by Joint Technical Committee ISO/IEC JTC 1, *Information technology*, Subcommittee SC 6, *Telecommunications and information exchange between systems*.

© ISO/IEC 1995
All rights reserved. Unless otherwise specified, no part of this publication may be reproduced or utilized in any form or by any means, electronic or mechanical, including photocopying and microfilm, without permission in writing from the publisher.

ISO/IEC Copyright Office • Case postale 56 • CH-1211 Genève 20 . Switzerland

Printed in Switzerland



Copyright International Organization for Standardization
Provided by IHS under license with ISO
No reproduction or networking permitted without license from IHS

Not for Resale

4851903 0636025 366



# Introduction

This amendment to ISO/IEC 10742:1994 adds specifications answering to requirements for DCE aspects and some new attributes for LAPBDLE MOs and IVMOs.

These new specifications came out of the comments to DIS 10742. They will be merged into the base document ISO/IEC 10742:1994 at the next revision.



Copyright International Organization for Standardization
Provided by IHS under license with ISO
No reproduction or networking permitted without license from IHS
Not for Resale

4851903 0636026 2T2



# Information technology - Telecommunications and information exchange between systems - Elements of management information related to OSI Data Link Layer standards

## AMENDMENT 1: Addition of DCE conditions and new attributes

**5.1.3.2 DLE**

*Change the last sentence to:*

"The sN-ServiceProvider attribute of the Network layer Linkage,X25PLE-DTE MOs and X25PLE-DCE" MOs contains the local distinguished name of a 'DLE' MO".

**5.6 The LAPB Data Link Entity managed object**

*Add a new CONDITIONAL PACKAGE to lAPBDLE MO CLASS:*

"mLP-Counters-P PRESENT IF ITU-T DCE mode operation is supported"

*Add the attributes mW and mX in the mLP-P PACKAGE:*

"mW REPLACE-WITH-DEFAULT GET-REPLACE
mX REPLACE-WITH-DEFAULT GET-REPLACE"

*Add the following definition of the new CONDITIONAL PACKAGE in Packages:*

"mLP-Counters-P PACKAGE
BEHAVIOUR mLP-Counters-P-B BEHAVIOUR
DEFINED AS
Additional properties present when ITU-T DCE mode operation is supported;;
ATTRIBUTES
receivedMlpResets REPLACE-WITH-DEFAULT GET-REPLACE,
timesMT1Expired REPLACE-WITH-DEFAULT GET-REPLACE,
iFramesReassignments REPLACE-WITH-DEFAULT GET-REPLACE,
receivedMlpFramesInGuardRegion REPLACE-WITH-DEFAULT GET-REPLACE,
REGISTERED AS {DLM.poi mLP-Counters-P(6)};"

*Add the following definitions of the new ATTRIBUTES in Attributes:*

"iFramesReassignments ATTRIBUTE
DERIVED FROM "GMI":nonWrapping64BitCounter;
BEHAVIOUR iFramesReassignments-B BEHAVIOUR
DEFINED AS
Counter. Number of reassignments of IFrames on another slp.;;
REGISTERED AS {DLM.aoi iFramesReassignments(46)};

mW ATTRIBUTE
WITH ATTRIBUTE SYNTAX DLM.MW;



Copyright International Organization for Standardization
Provided by IHS under license with ISO
No reproduction or networking permitted without license from IHS Not for Resale

4851903 0636027 139



```
MATCHES FOR EQUALITY, ORDERING;
BEHAVIOUR  mW-B  BEHAVIOUR
  DEFINED AS
    MLP window size.;;
REGISTERED AS   {DLM.aoi mW(47)};

mX  ATTRIBUTE
WITH ATTRIBUTE SYNTAX DLM.MX;
MATCHES FOR EQUALITY, ORDERING;
BEHAVIOUR  mX-B  BEHAVIOUR
  DEFINED AS
    Receive MLP window in the Guard Region.;;
REGISTERED AS  {DLM.aoi mX(48)};

receivedMlpFramesInGuardRegion  ATTRIBUTE
DERIVED FROM "GMI":nonWrapping64BitCounter;
BEHAVIOUR  receivedMlpFramesInGuardRegion-B  BEHAVIOUR
  DEFINED AS
    Counter. Number of MLP Frames received in the Guard Region.;;
REGISTERED AS  {DLM.aoi receivedMlpFramesInGuardRegion(49)};

receivedMlpResets  ATTRIBUTE
DERIVED FROM "GMI":nonWrapping64BitCounter;
BEHAVIOUR receivedMlpResets-B  BEHAVIOUR
  DEFINED AS
    Counter. Number of received MLP Resets.;;
REGISTERED AS   {DLM.aoi receivedMlpResets(50)};

timesMT1Expired ATTRIBUTE
DERIVED FROM "GMI":nonWrapping64BitCounter;
BEHAVIOUR timesMT1Expired-B  BEHAVIOUR
  DEFINED AS
    Counter. Lost multilink frames.;;
REGISTERED AS   {DLM.aoi timesMT1Expired(51)};"
```

### 5.8 The LAPB Single Link Protocol Connection managed object

*Complete the condition for the CONDITIONAL PACKAGE t3-P with:*

"or ITU-T DCE mode operation is supported"

*Add a new CONDITIONAL PACKAGE to sLPConnection MO CLASS:*

"t4-P PRESENT IF Timer T4 of ISO/IEC 7776 or ITU-T DCE mode is supported"

*Add a new CONDITIONAL PACKAGE to sLPConnection MO CLASS:*

"link-reset-disconnect-n2-P PRESENT IF supported"

*Remove in commonSLPConnection-P PACKAGE:*

"ATTRIBUTE :  t4Timer" *and*
"ATTRIBUTE GROUP:  t4Timer"

*Add in Packages the following definitions:*

```
"link-reset-disconnect-n2-P PACKAGE
 BEHAVIOUR link-reset-disconnect-n2-P-B BEHAVIOUR
   DEFINED AS
     Present if supported.;;
 ATTRIBUTES
   abnormalLinkDisconnectsReceived GET,
   abnormalLinkDisconnectsSent GET,
```



Copyright International Organization for Standardization
Provided by IHS under license with ISO
No reproduction or networking permitted without license from IHS Not for Resale

4851903 0636028 075



```
  linkResetsReceived GET,
  linkResetsSent GET,
  timesN2Reached GET;
ATTRIBUTE GROUPS
  "GMI":counters
      abnormalLinkDisconnectsReceived
      abnormalLinkDisconnectsSent
      linkResetsReceived
      linkResetsSent
      timesN2Reached;
REGISTERED AS {DLM.poi link-reset-disconnect-n2-P(4)};

t4-P PACKAGE
BEHAVIOUR t4-P-B BEHAVIOUR
  DEFINED AS
     Present if the Timer T4 is supported.;;
ATTRIBUTES
  t4Timer REPLACE-WITH-DEFAULT GET REPLACE,
  times T4Expired GET;
ATTRIBUTES GROUPS
  "GMI":counters
      timesT4Expired,
   timers
      t4Timer;
REGISTERED AS {DLM.poi t4-P(7)};"
```

*Add the following definitions in Attributes:*

```
"abnormalLinkDisconnectsReceived ATTRIBUTE
DERIVED FROM "GMI":nonWrapping64BitCounter;
BEHAVIOUR abnormalLinkDisconnectsReceived-B BEHAVIOUR
  DEFINED AS
     Counter. Total number of received abnormal Link Disconnects.;;
REGISTERED AS {DLM.aoi abnormalLinkDisconnectsReceived(41)};

abnormalLinkDisconnectsSent ATTRIBUTE
DERIVED FROM "GMI":nonWrapping64BitCounter;
BEHAVIOUR abnormalLinkDisconnectsSent-B BEHAVIOUR
  DEFINED AS
     Counter. Total number of sent abnormal Link Disconnects.;;
REGISTERED AS {DLM.aoi abnormalLinkDisconnectsSent(42)};

linkResetsReceived ATTRIBUTE
DERIVED FROM "GMI":nonWrapping64BitCounter;
BEHAVIOUR linkResetsReceived-B BEHAVIOUR
  DEFINED AS
     Counter. Total number of received Link Resets.;;
REGISTERED AS {DLM.aoi linkResetsReceived(43)};

linkResetsSent ATTRIBUTE
DERIVED FROM "GMI":nonWrapping64BitCounter;
BEHAVIOUR linkResetsSent-B BEHAVIOUR
  DEFINED AS
     Counter. Total number of sent Link Resets.;;
REGISTERED AS {DLM.aoi linkResetsSent(44)};

timesN2Reached ATTRIBUTE
DERIVED FROM "GMI":nonWrapping64BitCounter;
BEHAVIOUR timesN2Reached-B BEHAVIOUR
  DEFINED AS
     Counter. Total number of times N2 was Reached.;;
REGISTERED AS {DLM.aoi timesN2Reached(45)};"
```



Copyright International Organization for Standardization
Provided by IHS under license with ISO
No reproduction or networking permitted without license from IHS Not for Resale

*Add in the definition of Attribute t3Timer ATTRIBUTE for DEFINED AS:*

"or ITU-T X25 mandatory parameter"

*Add in the definition of Attribute t4Timer ATTRIBUTE for DEFINED AS:*

"or a DCE"

**5.9 The LAPB Single Link Protocol Connection Initial Values managed object**

*Complete the condition for the CONDITIONAL PACKAGE t3IVMO-P with:*

"or ITU-T DCE mode operation is supported"

*Add a new CONDITIONAL PACKAGE to sLPConnection IVMO CLASS:*

"t4IVMO-P PRESENT IF Timer T4 of ISO/IEC 7776 or ITU-T DCE mode is supported"

*Add the following definition in Packages:*

```
"t4IVMO-P PACKAGE
 BEHAVIOUR t4IVMO-P-B BEHAVIOUR
    DEFINED AS
       Present if the Timer T4 is supported.;;
 ATTRIBUTES
    t4Timer REPLACE-WITH-DEFAULT GET REPLACE,
    times T4Expired GET;
 ATTRIBUTES GROUPS
     "GMI":counters
        timesT4Expired,
      timers
        t4Timer;
 REGISTERED AS {DLM.poi t4IVMO-P(8)};"
```

**6 ASN.1 module**

*Add to other definitions*

```
"MW  ::= SEQUENCE{
    mWSend      [0] IMPLICIT INTEGER (1...4095),
    mWReceive   [1] IMPLICIT INTEGER (1...4095)}

 MX  ::= SEQUENCE{
    mXSend      [0] IMPLICIT INTEGER (1...4095),
    mXReceive   [1] IMPLICIT INTEGER (1...4095)}"
```

**Annex A (normative) Allocation of Object Identifiers**

*Add the following Object Identifiers to package(4)*

```
"link-reset-disconnect-n2-P(4)
 mLP-Counters-P(6)"
 t4-P(7)}
 t4IVMO-P(8)"
```

*Add the following Object Identifiers to attribute (7)*

```
"abnormalLinkDisconnectsReceived(41)
 abnormalLinkDisconnectsSent(42)
 linkResetsReceived(43)
 linkResetsSent(44)
 timesN2Reached(45)
 iFramesReassignments(46)
```



Copyright International Organization for Standardization
Provided by IHS under license with ISO
No reproduction or networking permitted without license from IHS Not for Resale

4851903 0636030 723



mW(47)
mX(48)
receivedMlpFramesInGuardRegion(49)
receivedMlpResets(50)
timesMT1Expired(51)

**New Annex**

*Add the following informative annex E.*



Copyright International Organization for Standardization
Provided by IHS under license with ISO
No reproduction or networking permitted without license from IHS Not for Resale

# Annex E
(informative)

# Additional attributes and action required for systems

## E.1 Introduction

In complete intermediate systems, such as a repeater, some attributes and actions are necessary to fill out the management of a complete system. These items are generic in the sense that they are required for managed systems in general. The following items are defined to aid in the completeness of this International Standard, although it is recognized that they are outside the bounds of the definition area for a layer 2 standard.

## E.2 Scope

This annex defines additional attributes and an action that are necessary to the management of a complete intermediate system such as a repeater. They are not specifically related to a Data Link Layer Management Standard.

When a generic systems management standard is available with these definitions (or similar), it is expected that this portion of this International Standard will be removed.

## E.3 Attributes and Action

**-- Attributes**

aTimeSinceSystemReset ATTRIBUTE
DERIVED FROM AttributeModule.ResettableCounter32;
BEHAVIOUR bTimeSinceSystemReset;
DEFINED AS
The time in tens of milliseconds since the last time that the system, including network management was reset. This may have been caused by ResetSystemAction or other means. This counter has a value of 0 when initialized.

Though the count is reported in tens of milliseconds, the required resolution is to the nearest 100 ms. The clocking source for the counter shall be accurate to within 1 % througout the full counting range.;

NOTE: The approximate minimum time for counter rollover is 497 days.
REGISTERED AS {iso(1)member-body(2) us(840) 802dot3(1006) repeaterMgt(19)attribute(7) sysResetTime(47)};

aRepeaterResetTimeStamp ATTRIBUTE
WITH ATTRIBUTE SYNTAX AttributeModule.Integer32;
BEHAVIOUR brepeaterResetTimeStamp;
DEFINED AS
Not a counter, this attribute provides the value of aTimeSinceSystemReset when the repeater enters the START state. This value may never be greater than aTimeSinceSystemReset.;
REGISTERED AS {iso(1)member-body(2) us(840)802dot3(10006)repeaterMgt(19) attribute(7) repeaterResetTimeStamp(48)};

**-- Action**

acResetSystemAction ACTION
BEHAVIOUR acResetSystem;
DEFINED AS
This action initializes the resettable management counters of the system and also of all contained objects. The value of non-resettable counters may change as a result of this action.;



Copyright International Organization for Standardization
Provided by IHS under license with ISO
No reproduction or networking permitted without license from IHS Not for Resale

NOTE: This action may result in the loss of packets.
MODE CONFIRMED;
REGISTERED AS {iso(1)member-body(2) us(840)802dot3(10006)repeaterMgt(19) action(9)
resetSystem(49)}



Copyright International Organization for Standardization
Provided by IHS under license with ISO
No reproduction or networking permitted without license from IHS Not for Resale

© ISO/IEC

**ICS 35.100.20**

**Descriptors:** data processing, information interchange, telecommunications, network interconnection, open systems interconnection, data link layer, management, information.

Price based on 7 pages

Copyright International Organization for Standardization
Provided by IHS under license with ISO
No reproduction or networking permitted without license from IHS

Not for Resale

10742 94 ■ 4851903 0571087 8T0 ■

INTERNATIONAL STANDARD

# ISO/IEC 10742

First edition
1994-08-01

# Information technology — Telecommunications and information exchange between systems — Elements of management information related to OSI Data Link Layer standards

*Technologies de l'information — Télécommunications et échange d'information entre systèmes — Éléments de l'information de gestion liés aux normes de la couche de liaison de données OSI*

Reference number
ISO/IEC 10742:1994(E)

Copyright International Organization for Standardization
Provided by IHS under license with ISO
No reproduction or networking permitted without license from IHS
Not for Resale

# Contents

Page

Foreword ... iii
Introduction ... iv
1 Scope ... 1
2 Normative references ... 1
2.1 Identical Recommendations | International Standards ... 1
2.2 Paired Recommendations | International Standards equivalent in technical content ... 2
2.3 Additional references ... 2
3 Definitions ... 3
3.1 Basic reference model ... 3
3.2 Management framework ... 3
3.3 Systems Management Overview ... 3
3.4 Common Management Information Service Definition ... 3
3.5 Information Model ... 3
3.6 GDMO ... 4
4 Abbreviations ... 4
5 Elements of Data Link Layer Management Information ... 5
5.1 Managed Object Hierarchy ... 5
5.2 Common Data Link Layer GDMO definitions ... 8
5.3 The Data Link Subsystem managed object ... 9
5.4 The Data Link Entity managed object ... 10
5.5 The Data Link Service Access Point managed object ... 11
5.6 The LAPB Data Link Entity managed object ... 12
5.7 The LAPB Single Link Protocol Machine managed object ... 14
5.8 The LAPB Single Link Protocol Connection managed object ... 15
5.9 The LAPB Single Link Protocol Connection Initial Values managed object ... 22
5.10 The MAC Data Link Entity managed object ... 23
5.11 The MAC managed object ... 24
5.12 The LLC Data Link Entity managed object ... 27
5.13 The LLC Connectionless Protocol Machine managed object ... 28
5.14 The LLC Connection-mode Protocol Machine managed object ... 29
6 ASN.1 module ... 30
7 Conformance ... 33
7.1 Conformance requirements to ISO/IEC 10742 ... 33
7.2 Protocol specific conformance requirements ... 33

Annexes
A Allocation of Object Identifiers ... 34
B IEEE 802.1F Common Models and Generic Definitions ... 36
B.1 Introduction ... 36
B.2 Common Models ... 36
B.2.1 Resource Type Managed Object ... 36
B.2.2 MACAddress Attribute ... 36
B.2.3 EWMA Metric Monitor Managed Object ... 36
B.3 Generic Definitions ... 38
B.3.1 Managed Objects ... 38
B.3.2 Packages ... 42
B.3.3 Use of Quality Of Service (QOS) Alarm Notification ... 43
B.4 Common Managed Objects ... 44
B.4.1 The ResourceTypeId managed object ... 44
B.4.2 The Scanner managed object ... 45
B.4.3 The Exponentially Weighted Moving Average Metric Monitor managed object ... 46
B.5 ASN.1 Module ... 50
C Shorthand Description of Managed Objects ... 52
D Examples of the use of Relationship Attributes ... 57
Index ... 61

© ISO/IEC 1994
All rights reserved. Unless otherwise specified, no part of this publication may be reproduced or utilized in any form or by any means, electronic or mechanical, including photocopying and microfilm, without permission in writing from the publisher.

ISO/IEC Copyright Office • Case postale 56 • CH-1211 Genève 20 • Switzerland

Printed in Switzerland



Copyright International Organization for Standardization
Provided by IHS under license with ISO
No reproduction or networking permitted without license from IHS Not for Resale

# Foreword

ISO (the International Organization for Standardization) and IEC (the International Electrotechnical Commission) form the specialized system for worldwide standardization. National bodies that are members of ISO or IEC participate in the development of International Standards through technical committees established by the respective organization to deal with particular fields of technical activity. ISO and IEC technical committees collaborate in fields of mutual interest. Other international organizations, governmental and non-governmental, in liaison with ISO and IEC, also take part in the work.

In the field of information technology, ISO and IEC have established a joint technical committee, ISO/IEC JTC 1. Draft International Standards adopted by the joint technical committee are circulated to national bodies for voting. Publication as an International Standard requires approval by at least 75 % of the national bodies casting a vote.

International Standard ISO/IEC 10742 was prepared by Joint Technical Committee ISO/IEC JTC 1, *Information technology.*

Annexes A and B form an integral part of this International Standard. Annexes C and D are for information only.



Copyright International Organization for Standardization
Provided by IHS under license with ISO
No reproduction or networking permitted without license from IHS
Not for Resale

# Introduction

This document is intended to become one of a set of International Standards produced to facilitate the interconnection of open systems. The set of International Standards covers the services, protocols and management information required to achieve such interconnection.

This International Standard is positioned with respect to other related Specifications by the layers defined in the *Reference Model for Open System Interconnection* (ISO 7498). In particular, it is concerned with the definition of Data Link Layer management information.



Copyright International Organization for Standardization
Provided by IHS under license with ISO
No reproduction or networking permitted without license from IHS Not for Resale

# Information technology — Telecommunications and information exchange between systems — Elements of management information related to OSI Data Link Layer standards

## 1 Scope

This International Standard provides the specification of management information within an Open System related to those operations of the OSI Data Link Layer specified by the specifications in this document. Specifics on how Data Link layer management is accomplished is beyond the scope of this International Standard. Data Link Layer management is defined by specifying:

- the managed object class definition of Data Link Layer Managed Objects following guidelines put forth by the *Structure of Management Information* (ISO/IEC 10165)
- the relationship of the Managed Objects and attributes to both the operation of the layer and to other objects and attributes of the layer, and
- the action type operations on the attributes of Data Link Layer Managed Objects that are available to OSI Systems Management.

## 2 Normative references

The following Recommendations and International Standards contain provisions which, through reference in this text, constitute provisions of this Recommendation | International Standard. At the time of publication, the editions indicated were valid. All Recommendations and Standards are subject to revision, and parties to agreements based on this Recommendation | International Standard are encouraged to investigate the possibility of applying the most recent editions of the Recommendations and Standards listed below. Members of IEC and ISO maintain Registers of currently valid International Standards. The Telecommunication Standardization Bureau of the ITU maintains a list of the currently valid ITU-T Recommendations.

### 2.1 Identical Recommendations | International Standards

- ITU-T Recommendation X.200(1993) | ISO 7498-1: 1994, *Information technology - Open Systems Interconnection Reference Model: Basic Reference Model.*

- CCITT Recommendation X.701(1992) | ISO/IEC 10040: 1992, *Information technology - Open Systems Interconnection - Systems management overview.*

- CCITT Recommendation X.720(1992) | ISO/IEC 10165-1: 1993, *Information technology - Open Systems Interconnection - Structure of management information: Management Information Model.*

- CCITT Recommendation X.721(1992) | ISO/IEC 10165-2: 1992, *Information technology - Open Systems Interconnection - Structure of management information: Definition of Management Information.*

- CCITT Recommendation X.722(1992) | ISO/IEC 10165-4: 1992, *Information technology - Open Systems Interconnection - Structure of management information: Guidelines for the definition of managed objects.*



Copyright International Organization for Standardization
Provided by IHS under license with ISO
No reproduction or networking permitted without license from IHS
Not for Resale

- ITU-T Recommendation X.723(1993) | ISO/IEC 10165-5:1994, *Information technology - Open Systems Interconnection -Structure of Management Information: Generic management information.*

- CCITT Recommendation X.730(1992) | ISO/IEC 10164-1: 1993, *Information technology - Open Systems Interconnection - Systems management: Object management function.*

- CCITT Recommendation X.731(1992) | ISO/IEC 10164-2: 1993, *Information technology - Open Systems Interconnection - Systems management: State management function.*

- CCITT Recommendation X.732(1992) | ISO/IEC 10164-3: 1993, *Information technology - Open Systems Interconnection - Systems management: Attributes for representing relationships.*

- CCITT Recommendation X.733(1992) | ISO/IEC /10164-4: 1992, *Information technology - Open Systems Interconnection - Systems management: Alarm reporting function.*

- CCITT Recommendation X.734(1992) | ISO/IEC 10164-5: 1993, *Information technology - Open Systems Interconnection - Systems management: Event report management function.*

- CCITT Recommendation X.735(1992) | ISO/IEC 10164-6: 1993, *Information technology -Open Systems Interconnection - Systems management: Log control function.*

## 2.2 Paired Recommendations | International Standards equivalent in technical content

- CCITT Recommendation X.700 (1992), *Management Framework for Open Systems Interconnection (OSI) for CCITT Applications.*

ISO 7498 - 4: 1989, *Information Processing Systems - Open Systems Interconnection - Basic Reference Model - Management framework.*

- CCITT Recommendation X.212(1988), *Data link service definition for open systems interconnection for CCITT applications.*

ISO/IEC 8886: 1992, *Information technology - Telecommunications and information exchange between systems - Data link service definition for Open Systems Interconnection.*

- CCITT Recommendation X.208(1988), *Specification of abstract syntax notation one (ASN.1).*

ISO/IEC 8824:1990, *Information technology - Open Systems Interconnection - Specification of the Abstract Syntax Notation One (ASN.1).*

- CCITT Recommendation X.710 (1991), *Common Management Information Service Definition for CCITT Applications.*

ISO/IEC 9595:1991, *Information technology - Open Systems Interconnection - Common management information service definition.*

- CCITT Recommendation X.711 (1991), *Common Management Information Protocol Specification for CCITT Applications.*

ISO/IEC 9596-1:1991, *Information technology - Open Systems Interconnection - Common management information protocol - Part 1: Specification.*

## 2.3 Additional references

- ITU-T Recommendation X.25 (1993), *Interface between data terminal equipment (DTE) and data circuit-terminating equipment (DCE) for terminals operating in the packet mode and connected to public data networks by dedicated circuit.*



Copyright International Organization for Standardization
Provided by IHS under license with ISO
No reproduction or networking permitted without license from IHS Not for Resale

ISO 7776: 1986, *Information processing Systems - Data communications - High-level data link control procedures - Description of the X.25 LAPB-compatible DTE data link procedures.*

- ISO 8802-2: 1989, *Information processing systems - Local area networks - Logical link control.*

- ISO/IEC 8802-3: 1993, *Information technology - Local and metropolitan area networks - Carrier Sence multiple access with collision detection (CSMA/CD) access method and physical layer specifications.*

- ISO/IEC 11575, *Information Technology - Telecommunications and Information Exchange Between Systems - Protocol Mappings for the OSI Data Link Service.*

## 3 Definitions

### 3.1 Basic reference model

This International Standard makes use of the following terms defined in ITU-T Rec X.200 | ISO/IEC 7498-1

a) Data Link Layer

b) open system

c) (N)-entity

d) (N)-protocol

e) (N)-service access point

### 3.2 Management framework

This International Standard makes use of the following terms defined in CCITT Rec X.700 | ISO/IEC 7498-4

a) Managed object

### 3.3 Systems Management Overview

This International Standard makes use of the following terms defined in CCITT Rec X.701 | ISO/IEC 10040.

a) Managed object class

b) Notification

### 3.4 Common Management Information Service Definition

This International Standard makes use of the following terms defined in CCITT Rec X.710 | ISO/IEC 9595.

a) Attribute

### 3.5 Information Model

This International Standard makes use of the following terms defined in CCITT Rec X.720 | ISO/IEC 10165-1.

a) Attribute Type

b) Behaviour

c) Containment



Copyright International Organization for Standardization
Provided by IHS under license with ISO
No reproduction or networking permitted without license from IHS Not for Resale

d) Distinguished Name

e) Inheritance

f) Name Binding

g) Package

h) Parameter

i) Relative Distinguished Name

j) Subclass

k) Superclass

### 3.6 GDMO

This International Standard makes use of the following terms defined in CCITT Rec X.722 | ISO/IEC 10165-4

a) Managed Object Class Definition

b) Template

## 4 Abbreviations

Within the Managed Object definitions and GDMO templates the following abbreviations are used in the standard-name element of a document-identifier when making references to other documents.

| | |
|---|---|
| DMI | CCITT Rec. X.721 I ISO/IEC 10165-2 |
| GMI | CCITT Rec. X.723 I ISO/IEC 10165-5 |

This International Standard makes use of the following symbols and abbreviations.

| | |
|---|---|
| CSMA/CD | Carrier sense multiple access with collision detection |
| DL | Data Link |
| DLE | Data Link Entity |
| DLL | Data Link Layer |
| DLM | Data Link Management |
| DLSAP | Data Link Service Access Point |
| DMI | Definition of Management Information |
| EWMA | Exponentially Weighted Moving Average |
| GDMO | Guidelines for the Definition of Managed Objects |
| GMI | Generic Management Information |
| IVMO | Initial Value Managed Object |
| LLC | Logical Link Control |
| MAC | Media Access Control |
| MLP | Multi Link Protocol |
| MO | Managed Object |
| NSAP | Network Service Access Point |
| PLE | Packet Level Entity |
| SAP | Service Access Point |
| SLP | Single Link Protocol |



Copyright International Organization for Standardization
Provided by IHS under license with ISO
No reproduction or networking permitted without license from IHS Not for Resale

# 5 Elements of Data Link Layer Management Information

## 5.1 Managed Object Hierarchy

### 5.1.1 Summary of managed objects

The following set of common managed objects are defined in this International Standard for the OSI Data Link Layer:

a) The Data Link Subsystem managed object (datalinkSubsystem) (see 5.3, page 9).
b) The Data Link Entity managed object (datalinkEntity) (see 5.4, page 10). (This managed object is never instantiated.)
c) The Data Link Service Access Point managed object (dLSAP) (see 5.5, page 11).
d) The LAPB Data Link Entity managed object (lAPBDLE) (see 5.6, page 12).
e) The LAPB Single Link Protocol Machine managed object (sLPPM) (see 5.7, page 14).
f) The LAPB Single Link Protocol Connection managed object (sLPConnection) (see 5.8, page 15).
g) The LAPB Single Link Protocol Connection Initial Values managed object (sLPConnectionIVMO) (see 5.9, page 22).
h) The Mac Data Link Entity managed object (mACDLE) (see 5.10, page 23).
i) The MAC managed object /mAC) (see 5.11, page 24). (This managed object is never instantiated.)
j) The LLC Data Link Entity managed object (lLCDLE) (see 5.12, page 27).
k) The LLC Connectionless Protocol Machine managed object (lLCCLPM)(see 5.13, page 28). (This managed object is never instantiated.)
l) The LLC Connection-mode Protocol Machine managed object (lLCCOPM) (see 5.14, page 29). (This managed object is never instantiated.)
m) The Resource TypeId managed object (resourceTypeId) (see annex B)
n) The Scanner managed object (scanner) (see annex B)(This managed object is never instantiated.)
o) The Exponentially Weighted Moving Average Metric Monitor managed object (eWMAMetricMonitor) (see annex B)

These Managed Objects represent OSI Management's view of those elements of an Open System which support the OSI Data Link Service subject to OSI management operations. Other MOs may be defined under Data Link Subsystem using these generic specifications.

### 5.1.2 Containment hierarchy

The containment hierarchy is illustrated in figure 1. Managed objects which can have multiple instances are illustrated by shadowed (multiple) boxes. These objects are defined in detail in the following clauses of this International Standard.



Copyright International Organization for Standardization
Provided by IHS under license with ISO
No reproduction or networking permitted without license from IHS Not for Resale

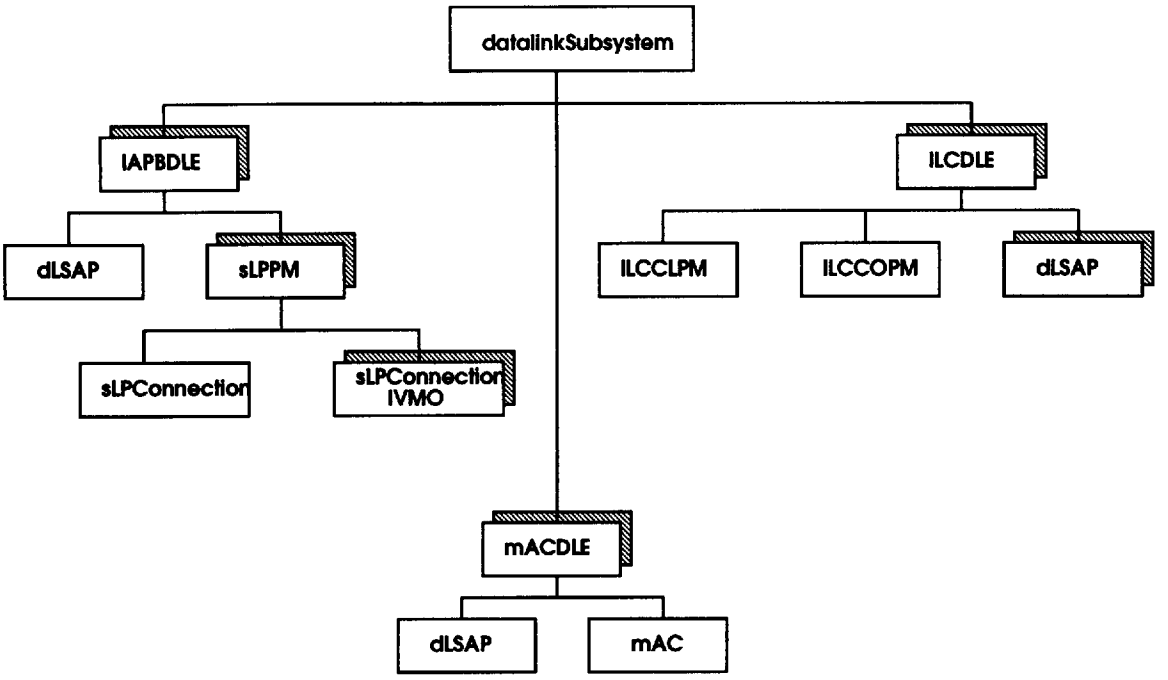


**Figure 1 - Data Link Layer Containment Hierarchy**

The datalink subsystem MO is subordinate to the system MO. The LAPB DLE, MAC DLE and LLC DLE MOs represent protocol- and media-specific communication entities.

The SLP PM MO represents the operation of the protocol machine for the single-link procedures specified in ISO 7776. The MAC, LLC CL PM and LLC CO PM MOs are generic managed objects from which MAC-specific and LLC-specific protocol machine managed objects can be derived, e.g. for CSMA/CD MAC specified in ISO/IEC 8802-3, and for LLC Type 1 and LLC Type 2 protocol operation specified in ISO 8802-2. The SLP Connection MO represent the management view of connections established using the SLP.

### 5.1.3 Relationships

#### 5.1.3.1 General

The use of relationship attributes is illustrated by examples in annex D. The following describes the individual relationships in more detail.

#### 5.1.3.2 DLE

There is a relationship between a 'DLE' MO (i.e. an LAPB, LLC and MAC DLE MO) and the MO representing the underlying service provider. This is represented by the attribute providerEntityNames inherited from the generic datalinkEntity MO. This is a read-write attribute which allows a manager to configure which entities are to be used to provide services to this entity. For example, a LAPB DLE MO might be configured with the local distinguished name of a Ph-Entity MO or an LLC DLE MO with the name of a MAC DLE MO (e.g. one containing a CSMA/CD MAC MO).

Additionally, a 'DLE' MO has a localSapNames attribute inherited from GMI:communicationsEntity. This is a read-only attribute which contains the local distinguished name(s) of SAP MO(s), representing the point at which services are provided to the entity. For example, in a LAPB DLE MO localSapNames might contain the name of a Ph-SAP MO or, in an LLC DLE MO, the name of a dLSAP MO contained in a MAC DLE MO.

The sN-ServiceProvider attribute of the Network layer Linkage and X25PLE-DTE MOs contains the local distinguished name of a 'DLE' MO.



Copyright International Organization for Standardization
Provided by IHS under license with ISO
No reproduction or networking permitted without license from IHS Not for Resale

**5.1.3.3** dlSAP

There is a relationship between a dlSAP MO and the managed objects that represent the (Network layer) user entities that are using the SAP. This is represented by the userEntityNames attribute inherited from GMI:sap1. For example, in an dlSAP MO contained in an LAPB DLE MO, userEntityNames might contain the distinguished name of an X25PLE-DTE MO.

The sN-SAP attribute of the Network layer Linkage and X25PLE-DTE MOs contains the distinguished name of a dlSAP MO.

**5.1.3.4** sLPConnection

There is a relationship between an sLPConnection MO and the MO representing the underlying Ph-Connection. This represented by the attribute underlyingConnectionNames inherited from GMI:singlePeerConnection.

### 5.1.4 Minimum Event Filtering Capabilities

The Data Link Layer management definitions embodied in this International Standard imply the frequent, and possibly excessive, generation of notifications during regular layer operation. These notifications are especially useful for effective fault management, where they facilitate the tracing and pinpointing of error situations. To avoid the excessive dissemination of these event reports under normal operating conditions, it is advisable for a managed system to have, as a minimum, the capability to perform discrimination based upon:

a) The source managed object class.
b) The object identifier values in the probable cause and specific problems field of communication alarms.

### 5.1.5 Use of Optional Fields

Where reference is made in this International Standard to ASN.1 syntax defined in DMI or GMI, only the following fields shall be employed.

1) Those which are not OPTIONAL in the ASN.1 syntax.

2) Those which are OPTIONAL, but whose use is explicitly required by this International Standard.

3) Those which are OPTIONAL, but whose ASN.1 type is SET OF ManagementExtension.

The use of any other fields is prohibited.



Copyright International Organization for Standardization
Provided by IHS under license with ISO
No reproduction or networking permitted without license from IHS Not for Resale

## 5.2 Common Data Link Layer GDMO definitions

**-- Behaviours**

commonCreationDeletion-B BEHAVIOUR
DEFINED AS
Managed object class imports the ISO/IEC 10165-2 objectCreation and/or objectDeletion notifications. Used as follows:

objectCreation - Generated whenever an instance of the managed object class is created. Implementations may optionally include the sourceIndicator parameter in the notification. If creation occured as a result of internal operation of the resource, the value 'resourceOperation' is used. If creation occured in response to a management operation, the value 'managementOperation' is used. A value of 'unknown' may be returned if it is not possible to determine the source of the operation. None of the other optional parameters are used.

objectDeletion - Generated whenever an instance of the managed object class is deleted. Implementations may optionally include the sourceIndicator parameter in the notification. If deletion occured as a result of internal operation of the resource, the value 'resourceOperation' is used. If deletion occured in response to a management operation, the value 'managementOperation' is used. A value of 'unknown' may be returned if it is not possible to determine the source of the operation. None of the other optional parameters are used.;

commonStateChange-B BEHAVIOUR
DEFINED AS
Managed object class imports the ISO/IEC 10165-2 stateChange notification. Used to report the changes to the operationalState attribute, and where present, the administrativeState attribute. A single parameter set is included in the State change definition field. Only the (mandatory) attributeId and (optional) newAttributeValue parameters are used.;

**-- Attribute Groups**

timers ATTRIBUTE GROUP
-- Empty group definition. Timer attributes are added to the group in
-- package definitions.
DESCRIPTION The group of all timer attributes;
REGISTERED AS {DLM.agoi timers(1)};



Copyright International Organization for Standardization
Provided by IHS under license with ISO
No reproduction or networking permitted without license from IHS Not for Resale

## 5.3 The Data Link Subsystem managed object

```
-- There shall be exactly one of these managed objects within a system.
-- It exists to provide a container for all managed objects in a system
-- that relate to the operation of the Datalink layer.
--
-- The datalinkSubsystem managed object can not be created or deleted
-- explicitly by management operation. It exists inherently in a system;
-- created and deleted as part of system operation.

datalinkSubsystem MANAGED OBJECT CLASS
DERIVED FROM "GMI":subsystem;
CHARACTERIZED BY datalinkSubsystem-P PACKAGE
   ATTRIBUTES
      "GMI":subsystemId
         INITIAL VALUE DLM.datalinkSubsystemId-Value
         GET;;;
REGISTERED AS {DLM.moi datalinkSubsystem(1)};

-- Name Bindings

-- IMPORT "GMI":subsystem-system NAME BINDING
```



Copyright International Organization for Standardization
Provided by IHS under license with ISO
No reproduction or networking permitted without license from IHS Not for Resale

## 5.4 The Data Link Entity managed object

```
-- The generic DLE MO from which protocol- and media-specific DLE MOs
-- may be derived.

datalinkEntity MANAGED OBJECT CLASS
DERIVED FROM "GMI":communicationsEntity;
CHARACTERIZED BY datalinkEntity-P PACKAGE
  BEHAVIOUR
    commonCreationDeletion-B,
    commonStateChange-B;
  ATTRIBUTES
    providerEntityNames REPLACE-WITH-DEFAULT
      GET-REPLACE;
  ATTRIBUTE GROUPS
    "DMI":state
      "DMI":operationalState;
  NOTIFICATIONS
    "DMI":objectCreation,
    "DMI":objectDeletion,
    "DMI":stateChange;;;
REGISTERED AS {DLM.moi datalinkEntity(2)};
```

**-- Name Bindings**

```
-- IMPORT "GMI":communicationsEntity-subsystem NAME BINDING

datalinkEntity-datalinkSubsystem-Management NAME BINDING
SUBORDINATE OBJECT CLASS datalinkEntity AND SUBCLASSES;
NAMED BY
SUPERIOR OBJECT CLASS datalinkSubsystem AND SUBCLASSES;
WITH ATTRIBUTE "GMI":communicationsEntityId;
BEHAVIOUR datalinkEntity-datalinkSubsystem-Management-B BEHAVIOUR
  DEFINED AS
    The name binding which applies when a datalinkEntity managed object (or
    an instance of a subclass of the datalinkEntity MO class) can be created by
    management as a subordinate object of the datalinkSubsystem
    managed object (or subclass), and deleted by management.;;
CREATE;
DELETE ONLY-IF-NO-CONTAINED-OBJECTS;
REGISTERED AS {DLM.nboi datalinkEntity-datalinkSubsystem-Management(1)};
```

**-- Attributes**

```
providerEntityNames ATTRIBUTE
WITH ATTRIBUTE SYNTAX DLM.GroupObjects;
MATCHES FOR EQUALITY, SET-COMPARISON, SET-INTERSECTION;
BEHAVIOUR providerEntityNames-B BEHAVIOUR
 DEFINED AS
    The distinguished names of provider entity managed objects.
    The managed objects that represent the entities to be used to
    provide services to this entity.;;
REGISTERED AS {DLM.aoi providerEntityNames(11)};
```



Copyright International Organization for Standardization
Provided by IHS under license with ISO
No reproduction or networking permitted without license from IHS Not for Resale

## 5.5 The Data Link Service Access Point managed object

```
-- The dLSAP managed object class is used to represent a service access
-- point at which services are provided by a DLE to the user entity.
-- Instances of the dLSAP managed object class are contained within
-- instances of subclasses derived from the datalinkEntity managed object
-- class. Constraints on the number of contained dLSAP MOs and any
-- specific semantics of the attributes are given as part of  the definition
-- of the containing DLE managed object class.
--
-- A dLSAP managed object may be created and deleted explicitly by
-- management operation or created and deleted automatically as part of
-- system operation, e.g. when a user of the Data Link layer service
-- requests and is granted use of the service. The mechanism by which
-- this happens is a local matter and not subject to OSI standardisation.

dLSAP MANAGED OBJECT CLASS
DERIVED FROM "GMI":sap1;
REGISTERED AS {DLM.moi dLSAP(13)};

-- Name Bindings

-- IMPORT "GMI":sap1-communicationsEntity NAME BINDING

dLSAP-datalinkEntity-Management NAME BINDING
SUBORDINATE OBJECT CLASS dLSAP AND SUBCLASSES;
NAMED BY
SUPERIOR OBJECT CLASS datalinkEntity AND SUBCLASSES;
WITH ATTRIBUTE "GMI":sapId;
BEHAVIOUR dLSAP-datalinkEntity-Management-B BEHAVIOUR
  DEFINED AS
      The name binding which applies when a dLSAP managed object (or
      an instance of a subclass of the dLSAP MO class) can be created
      by management as a subordinate object of a datalinkEntity managed
      object (or subclass), and deleted by management.;;
CREATE;
DELETE ONLY-IF-NO-CONTAINED-OBJECTS;
REGISTERED AS {DLM.nboi dLSAP-datalinkEntity-Management(2)};
```



Copyright International Organization for Standardization
Provided by IHS under license with ISO
No reproduction or networking permitted without license from IHS Not for Resale

## 5.6 The LAPB Data Link Entity managed object

```
-- There may be multiple instances of the lAPBDLE managed object in a
-- system. Systems not supporting the LAPB Data Link procedures defined
-- in IS 7776 are not required to support the lAPBDLE and contained
---.managed objects.
--
-- The lAPBDLE managed object has a conditional mlp Package. There may
-- be multiple instances of lAPBDLE MO in a system, both with and without
-- the mlp Package. For those instances in which the package is absent,
-- the mlp procedures do not apply and the lAPBDLE MO may contain at
-- most one sLPPM MO. For those instances in which the package is
-- present, the mlp procedures do apply and the lAPBDLE MO may contain
-- multiple instances of sLPPM MO.
--
-- A lAPBDLE MO may contain at most one dLSAP MO. The value of the
-- sap1Address attribute is of no significance. The cardinality of the
-- userEntityNames attribute is limited to one.
--
-- A lAPBDLE MO may be created and deleted explicitly by
-- management operation or created and deleted automatically as
-- part of system operation.
--
-- When the lAPBDLE MO is operable, the operationalState shall
-- have the value 'enabled'; otherwise it shall have the value 'disabled'.
-- Transitions of operationalState shall be reported using the
-- stateChange notification.

lAPBDLE MANAGED OBJECT CLASS
DERIVED FROM datalinkEntity;
CONDITIONAL PACKAGES
   mLP-P PRESENT IF lAPBDLE supports mlp procedures,
   mT2-P PRESENT IF lAPBDLE supports mlp procedures and mT2 timer.;
REGISTERED AS {DLM.moi lAPBDLE(3)};

-- Packages

mLP-P PACKAGE
BEHAVIOUR mLP-P-B BEHAVIOUR
   DEFINED AS
      Additional properties of an lAPBDLE MO, present when mlp procedures supported.;;
ATTRIBUTES
   mT1Timer REPLACE-WITH-DEFAULT
      GET-REPLACE,
   mT3Timer REPLACE-WITH-DEFAULT
      GET-REPLACE;
ATTRIBUTE GROUPS
   timers
      mT1Timer
      mT3Timer;
REGISTERED AS {DLM.poi mLP-P(1)};

mT2-P PACKAGE
BEHAVIOUR mT2-P-B BEHAVIOUR
   DEFINED AS
      Additional properties present when mT2 timer is supported.;;
ATTRIBUTES
   mT2Timer REPLACE-WITH-DEFAULT
      GET-REPLACE;
ATTRIBUTE GROUPS
   timers
      mT2Timer;
REGISTERED AS {DLM.poi mT2-P(5)};
```



Copyright International Organization for Standardization
Provided by IHS under license with ISO
No reproduction or networking permitted without license from IHS
Not for Resale

```
-- Attributes

mT1Timer ATTRIBUTE
DERIVED FROM "GMI":timer;
BEHAVIOUR mT1Timer-B BEHAVIOUR
  DEFINED AS
    Value of the ISO 7776 parameter MT1 (lost frame timer).
    Unit is seconds.;;
REGISTERED AS {DLM.aoi mT1Timer(12)};

mT2Timer ATTRIBUTE
DERIVED FROM "GMI":timer;
BEHAVIOUR mT2Timer-B BEHAVIOUR
  DEFINED AS
    Value of the ISO 7776 parameter MT2 (group busy timer).
    Unit is seconds.;;
REGISTERED AS {DLM.aoi mT2Timer(13)};

mT3Timer ATTRIBUTE
DERIVED FROM "GMI":timer;
BEHAVIOUR mT3Timer-B BEHAVIOUR
  DEFINED AS
    Value of the ISO 7776 parameter MT3 (mlp reset confirmation
    timer). Unit is seconds.;;
REGISTERED AS {DLM.aoi mT3Timer(14)};
```



Copyright International Organization for Standardization
Provided by IHS under license with ISO
No reproduction or networking permitted without license from IHS Not for Resale

## 5.7 The LAPB Single Link Protocol Machine managed object

```
-- The sLPPM managed object represents the operation of the LAPB Data
-- Link layer protocol machine described in IS 7776 over a single physical
-- link. An sLPPM managed object may contain at most one sLPConnection
-- MO and one or more sLPConnectionIVMO.
--
-- An sLPPM MO may be created and deleted explicitly by
-- management operation or created and deleted automatically as
-- part of system operation.
--
-- When the sLPPM MO is operable, the operationalState shall
-- have the value 'enabled'; otherwise it shall have the value 'disabled'.
-- Transitions of operationalState shall be reported using the
-- stateChange notification.

sLPPM MANAGED OBJECT CLASS
DERIVED FROM "GMI":coProtocolMachine;
CHARACTERIZED BY sLPPM-P PACKAGE
  BEHAVIOUR
    commonCreationDeletion-B,
    commonStateChange-B;
  ATTRIBUTE GROUPS
    "DMI":state
      "DMI":operationalState;
  ACTIONS
    "GMI":activate,
    "GMI":deactivate;
  NOTIFICATIONS
    "DMI":objectCreation,
    "DMI":objectDeletion,
    "DMI":stateChange;;;
REGISTERED AS {DLM.moi sLPPM(4)};

-- Name Bindings

-- IMPORT "GMI":coProtocolMachine-entity NAME BINDING

sLPPM-IAPBDLE-Management NAME BINDING
SUBORDINATE OBJECT CLASS sLPPM AND SUBCLASSES;
NAMED BY
SUPERIOR OBJECT CLASS IAPBDLE AND SUBCLASSES;
WITH ATTRIBUTE "GMI":coProtocolMachineId;
BEHAVIOUR sLPPM-IAPBDLE-Management-B BEHAVIOUR
  DEFINED AS
    The name binding which applies when a sLPPM managed object (or
    an instance of a subclass of the sLPPM MO class) can be created
    by management as a subordinate object of a IAPBDLE managed
    object (or subclass), and deleted by management.;;
CREATE;
DELETE ONLY-IF-NO-CONTAINED-OBJECTS;
REGISTERED AS {DLM.nboi sLPPM-IAPBDLE-Management(3)};
```



Copyright International Organization for Standardization
Provided by IHS under license with ISO
No reproduction or networking permitted without license from IHS Not for Resale

## 5.8 The LAPB Single Link Protocol Connection managed object

```
-- The sLPConnection managed object represents the local view of a
-- connection between LAPB DLEs over a single physical link.

-- An sLPConnection MO is created automatically as part of system
-- operation.
-- An sLPConnection MO may be deleted automatically as part of system
-- operation or may be deleted as a result of the deactivate or delete
-- management
-- operations. An sLPConnectionIVMO may be used as the source of
-- initial values of attributes of an slpConnection MO.

sLPConnection MANAGED OBJECT CLASS
DERIVED FROM "GMI":singlePeerConnection;
CHARACTERIZED BY
   commonSLPConnection-P,
   sLPConnection-P;
CONDITIONAL PACKAGES
  t3-P PRESENT IF Optional Timer T3 of ISO 7776 is supported.;
REGISTERED AS {DLM.moi sLPConnection(5)};

-- Packages

commonSLPConnection-P PACKAGE
BEHAVIOUR
   commonCreationDeletion-B;
ATTRIBUTES
   interfaceType REPLACE-WITH-DEFAULT
      DEFAULT VALUE DLM.interfaceTypeDefault -- dTE
      GET-REPLACE,
   k REPLACE-WITH-DEFAULT
      GET-REPLACE,
   n1 REPLACE-WITH-DEFAULT
      GET-REPLACE,
   n2 REPLACE-WITH-DEFAULT
      GET-REPLACE,
   sequenceModulus REPLACE-WITH-DEFAULT
      GET-REPLACE,
   t1Timer REPLACE-WITH-DEFAULT
      GET-REPLACE,
   t2Timer REPLACE-WITH-DEFAULT
      GET-REPLACE,
   t4Timer REPLACE-WITH-DEFAULT
      GET-REPLACE;
ATTRIBUTE GROUPS
   timers
      t1Timer
      t2Timer
      t4Timer;
NOTIFICATIONS
   "DMI":objectCreation,
   "DMI":objectDeletion;
; -- not registered

sLPConnection-P PACKAGE
BEHAVIOUR
   commonDeactivateConnection-B,
   commonStateChange-B,
   fRMRReceivedCommunicationsAlarm-B;
ATTRIBUTES
   fCSErrorsReceived GET,
   fRMRsReceived  GET,
```



Copyright International Organization for Standardization
Provided by IHS under license with ISO
No reproduction or networking permitted without license from IHS Not for Resale

```
    fRMRsSent  GET,
    iFrameDataOctetsReceived GET,
    iFrameDataOctetsSent GET,
    iFramesReceived GET,
    iFramesSent GET,
    pollsReceived GET,
    rEJsReceived GET,
    rEJsSent GET,
    rNRsReceived GET,
    rNRsSent GET,
    sABMsReceived GET,
    sABMsSent GET,
    sLPProtocolState GET,
    timesT1Expired GET;
ATTRIBUTE GROUPS
    "GMI":counters
        fCSErrorsReceived
        fRMRsReceived
        fRMRsSent
        iFrameDataOctetsReceived
        iFrameDataOctetsSent
        iFramesReceived
        iFramesSent
        pollsReceived
        rEJsReceived
        rEJsSent
        rNRsReceived
        rNRsSent
        sABMsReceived
        sABMsSent
        timesT1Expired,
    "DMI":state
        sLPProtocolState;
ACTIONS
    "GMI":deactivate;
NOTIFICATIONS
    "DMI":communicationsAlarm
        fRMR;
        -- Note: The fRMR parameter is carried
        -- as additionalInformation in the communicationsAlarm.
; -- not registered

t3-P PACKAGE
BEHAVIOUR t3-P-B BEHAVIOUR
    DEFINED AS
        Present if the optional Timer T3 is supported.;;
ATTRIBUTES
    t3Timer REPLACE-WITH-DEFAULT
        GET-REPLACE,
    timesT3Expired
        GET;
ATTRIBUTE GROUPS
    "GMI":counters
        timesT3Expired,
    timers
        t3Timer;
REGISTERED AS {DLM.poi t3-P(2)};

-- Behaviours

commonDeactivateConnection-B BEHAVIOUR
DEFINED AS
    Managed object class imports the ISO/IEC 10165-5 deactivate
```



Copyright International Organization for Standardization
Provided by IHS under license with ISO
No reproduction or networking permitted without license from IHS Not for Resale

action. The deactivate action causes the connection to be terminated. The termination should occur as rapidly as practical, but no particular time constraints are implied. Typically, this action simulates a disconnect request received across the service interface. If a more rapid means for terminating the connection exists, then this should be used. The termination shall occur in conformance to the protocol standard. The Managed Object remains in existence after completion of the deactivate action. It is subsequently deleted when the connection is terminated, in the same way as if the connection had been terminated by other means. A deactivate action may fail (with the ProcessingFailure response) if it is temporarily not possible to terminate the connection.;

fRMRReceivedCommunicationsAlarm-B BEHAVIOUR
DEFINED AS
Managed object imports the ISO/IEC 10165-2 communicationsAlarm notification. Used to report the following conditions:

fRMRReceived - A FRMR frame is received. The received FRMR frame is reported as additionalInformation in the notification, using the fRMR parameter. The significance subparameter shall be set as described above.

The probableCause parameter is set to the value communicationsProtocolError.

The value DLM.fRMRReceived shall be reported in the specificProblems parameter. In addition, the reason why the frame was sent is also returned in specificProblems. Values are specified in the DLM ASN.1 module for controlFieldUndefinedOrUnimplemented, infoFieldLengthGreaterThanMaximum, invalidNR, formatError, and nonSpecific.

The perceivedSeverity parameter is set to the value Minor. A subsequent communicationsAlarm with a perceivedSeverity value of Cleared is not generated. No other parameters are used.;

sLPConnection-sLPPM-Automatic-B BEHAVIOUR
DEFINED AS
The name binding which applies when an sLPConnection managed object (or an instance of a subclass of the sLPConnection MO class) is created automatically by the operation of the system as a subordinate object of an sLPPM managed object (or subclass), and deleted automatically.

The creation of an instance of an sLPConnection MO (or subclass) using this name binding may reference an instance of the sLPConnectionIVMO (or subclass). The means by which an instance (if any) of the sLPConnectionIVMO are identified are a local matter. When this occurs, some of the initial values of the attributes of the instance of the sLPConnection MO may be supplied by the values of the attributes in the specified instance of sLPConnectionIVMO. However any such value may be overridden by a value supplied by local means (for example across an internal interface). Where values are supplied by the IVMO, the initial value of an attribute of the sLPConnection MO shall be the value of the corresponding attribute in the sLPConnectionIVMO (that is, which has the same attribute template label). The naming attribute of the sLPConnection MO is assigned a value according to local mechanisms.;

sLPConnection-sLPPM-Management-B BEHAVIOUR
DEFINED AS
The name binding which applies when an sLPConnection managed



Copyright International Organization for Standardization
Provided by IHS under license with ISO
No reproduction or networking permitted without license from IHS Not for Resale

object (or an instance of a subclass of the sLPConnection MO class) which is a subordinate object of an sLPPM managed object (or subclass), can be deleted by management.;

**-- Name Bindings**

```
sLPConnection-sLPPM-Automatic NAME BINDING
SUBORDINATE OBJECT CLASS sLPConnection AND SUBCLASSES;
NAMED BY
SUPERIOR OBJECT CLASS sLPPM AND SUBCLASSES;
WITH ATTRIBUTE "GMI":connectionId;
BEHAVIOUR sLPConnection-sLPPM-Automatic-B;
REGISTERED AS {DLM.nboi sLPConnection-sLPPM-Automatic(4)};

sLPConnection-sLPPM-Management NAME BINDING
SUBORDINATE OBJECT CLASS sLPConnection AND SUBCLASSES;
NAMED BY
SUPERIOR OBJECT CLASS sLPPM AND SUBCLASSES;
WITH ATTRIBUTE "GMI":connectionId;
BEHAVIOUR
   sLPConnection-sLPPM-Automatic-B,
   sLPConnection-sLPPM-Management-B;
DELETE ONLY-IF-NO-CONTAINED-OBJECTS;
REGISTERED AS {DLM.nboi sLPConnection-sLPPM-Management(5)};
```

**-- Attributes**

```
fCSErrorsReceived ATTRIBUTE
DERIVED FROM "GMI":nonWrapping64BitCounter;
BEHAVIOUR fCSErrorsReceived-B BEHAVIOUR
  DEFINED AS
    Counter. Total number of frames received with a bad frame
     check.;;
REGISTERED AS {DLM.aoi fCSErrorsReceived(15)};

fRMRsReceived ATTRIBUTE
DERIVED FROM "GMI":nonWrapping64BitCounter;
BEHAVIOUR fRMRsReceived-B BEHAVIOUR
  DEFINED AS
    Counter. Total number of FRMR frames received.;;
REGISTERED AS {DLM.aoi fRMRsReceived(1)};

fRMRsSent ATTRIBUTE
DERIVED FROM "GMI":nonWrapping64BitCounter;
BEHAVIOUR fRMRsSent-B BEHAVIOUR
  DEFINED AS
    Counter. Total number of FRMR frames sent.;;
REGISTERED AS {DLM.aoi fRMRsSent(2)};

iFrameDataOctetsReceived ATTRIBUTE
DERIVED FROM "GMI":nonWrapping64BitCounter;
BEHAVIOUR iFrameDataOctetsReceived-B BEHAVIOUR
  DEFINED AS
    Counter. Total number of data octets received in I frames.
    Only data octets in new I frames are counted, i.e. retransmitted
    frames that are received do not cause the counter to be
    incremented.;;
REGISTERED AS {DLM.aoi iFrameDataOctetsReceived(16)};

iFrameDataOctetsSent ATTRIBUTE
DERIVED FROM "GMI":nonWrapping64BitCounter;
BEHAVIOUR iFrameDataOctetsSent-B BEHAVIOUR
  DEFINED AS
```



Copyright International Organization for Standardization
Provided by IHS under license with ISO
No reproduction or networking permitted without license from IHS Not for Resale

```
      Counter. Total number of data octets sent in I frames.
      Only data octets in new I frames are counted, i.e. retransmitted
      frames that are sent do not cause the counter to be incremented.;;
REGISTERED AS {DLM.aoi iFrameDataOctetsSent(17)};

iFramesReceived ATTRIBUTE
DERIVED FROM "GMI":nonWrapping64BitCounter;
BEHAVIOUR iFramesReceived-B BEHAVIOUR
  DEFINED AS
      Counter. Total number of I frames received.
      Only new I frames are counted, i.e. retransmitted frames that
      are received do not cause the counter to be incremented.;;
REGISTERED AS {DLM.aoi iFramesReceived(3)};

iFramesSent ATTRIBUTE
DERIVED FROM "GMI":nonWrapping64BitCounter;
BEHAVIOUR iFramesSent-B BEHAVIOUR
  DEFINED AS
      Counter. Total number of I frames sent.
      Only new I frames are counted, i.e. retransmitted frames that
      are sent do not cause the counter to be incremented.;;
REGISTERED AS {DLM.aoi iFramesSent(4)};

interfaceType ATTRIBUTE
WITH ATTRIBUTE SYNTAX DLM.InterfaceType;
MATCHES FOR EQUALITY;
BEHAVIOUR interfaceType-B BEHAVIOUR
  DEFINED AS
      Determines the address mode used by the local DTE.;;
REGISTERED AS {DLM.aoi interfaceType(18)};

k ATTRIBUTE
WITH ATTRIBUTE SYNTAX DLM.WindowSize;
MATCHES FOR EQUALITY, ORDERING;
BEHAVIOUR k-B BEHAVIOUR
  DEFINED AS
      Value of the ISO 7776 parameter k.
      The maximum number of sequentially numbered I frames that a DTE
      may have outstanding (i.e. unacknowledged) at any given time.;;
REGISTERED AS {DLM.aoi k(19)};

n1 ATTRIBUTE
WITH ATTRIBUTE SYNTAX DLM.MaximumIFrameSize;
MATCHES FOR EQUALITY, ORDERING;
BEHAVIOUR n1-B BEHAVIOUR
  DEFINED AS
      Value of the ISO 7776 parameter N1.
      The maximum number of bits in an I frame (excluding flags and
      "0" bits inserted for transparency).;;
REGISTERED AS {DLM.aoi n1(20)};

n2 ATTRIBUTE
WITH ATTRIBUTE SYNTAX DLM.Integer;
MATCHES FOR EQUALITY, ORDERING;
BEHAVIOUR n2-B BEHAVIOUR
  DEFINED AS
      Value of the ISO 7776 parameter N2.
      The maximum number of attempts that shall be made to complete
      the successful transmission of a frame.;;
REGISTERED AS {DLM.aoi n2(21)};

pollsReceived ATTRIBUTE
DERIVED FROM "GMI":nonWrapping64BitCounter;
```



Copyright International Organization for Standardization
Provided by IHS under license with ISO
No reproduction or networking permitted without license from IHS Not for Resale

```
BEHAVIOUR pollsReceived-B BEHAVIOUR
  DEFINED AS
    Counter. Total number of command frames received with P-bit set.;;
REGISTERED AS {DLM.aoi pollsReceived(22)};

rEJsReceived ATTRIBUTE
DERIVED FROM "GMI":nonWrapping64BitCounter;
BEHAVIOUR rEJsReceived-B BEHAVIOUR
  DEFINED AS
    Counter. Total number of REJ frames received.;;
REGISTERED AS {DLM.aoi rEJsReceived(5)};

rEJsSent ATTRIBUTE
DERIVED FROM "GMI":nonWrapping64BitCounter;
BEHAVIOUR rEJsSent-B BEHAVIOUR
  DEFINED AS
    Counter. Total number of REJ frames sent.;;
REGISTERED AS {DLM.aoi rEJsSent(6)};

rNRsReceived ATTRIBUTE
DERIVED FROM "GMI":nonWrapping64BitCounter;
BEHAVIOUR rNRsReceived-B BEHAVIOUR
  DEFINED AS
    Counter. Total number of RNR frames received.;;
REGISTERED AS {DLM.aoi rNRsReceived(7)};

rNRsSent ATTRIBUTE
DERIVED FROM "GMI":nonWrapping64BitCounter;
BEHAVIOUR rNRsSent-B BEHAVIOUR
  DEFINED AS
    Counter. Total number of RNR frames sent.;;
REGISTERED AS {DLM.aoi rNRsSent(8)};

sABMsReceived ATTRIBUTE
DERIVED FROM "GMI":nonWrapping64BitCounter;
BEHAVIOUR sABMsReceived-B BEHAVIOUR
  DEFINED AS
    Counter. Total number of SABM frames received.;;
REGISTERED AS {DLM.aoi sABMsReceived(9)};

sABMsSent ATTRIBUTE
DERIVED FROM "GMI":nonWrapping64BitCounter;
BEHAVIOUR sABMsSent-B BEHAVIOUR
  DEFINED AS
    Counter. Total number of SABM frames sent.;;
REGISTERED AS {DLM.aoi sABMsSent(10)};

sLPProtocolState ATTRIBUTE
WITH ATTRIBUTE SYNTAX DLM.SLPProtocolState;
MATCHES FOR EQUALITY;
BEHAVIOUR sLPProtocolState-B BEHAVIOUR
  DEFINED AS
    Local state of a LAPB (SLP) connection.;;
REGISTERED AS {DLM.aoi sLPProtocolState(23)};

sequenceModulus ATTRIBUTE
WITH ATTRIBUTE SYNTAX DLM.SequenceModulus;
MATCHES FOR EQUALITY;
BEHAVIOUR sequenceModulus-B BEHAVIOUR
  DEFINED AS
    Determines basic (modulo 8) or extended (modulo 128) operation.;;
REGISTERED AS {DLM.aoi sequenceModulus(24)};
```



Copyright International Organization for Standardization
Provided by IHS under license with ISO
No reproduction or networking permitted without license from IHS Not for Resale

```
t1Timer ATTRIBUTE
DERIVED FROM "GMI":timer;
BEHAVIOUR t1Timer-B BEHAVIOUR
  DEFINED AS
    Value of the ISO 7776 parameter Timer T1.
    Unit is hundreds of milliseconds.;;
REGISTERED AS {DLM.aoi t1Timer(25)};

t2Timer ATTRIBUTE
DERIVED FROM "GMI":timer;
BEHAVIOUR t2Timer-B BEHAVIOUR
  DEFINED AS
    Value of the ISO 7776 parameter T2.
    Unit is hundreds of milliseconds.;;
REGISTERED AS {DLM.aoi t2Timer(26)};

t3Timer ATTRIBUTE
DERIVED FROM "GMI":timer;
BEHAVIOUR t3Timer-B BEHAVIOUR
  DEFINED AS
    Value of the ISO 7776 optional parameter T3.
    Unit is seconds.;;
REGISTERED AS {DLM.aoi t3Timer(27)};

t4Timer ATTRIBUTE
DERIVED FROM "GMI":timer;
BEHAVIOUR t4Timer-B BEHAVIOUR
  DEFINED AS
    Value of the ISO 7776 parameter T4.
    The maximum time a DTE will allow without frames being
    exchanged on the data link. Unit is seconds.;;
REGISTERED AS {DLM.aoi t4Timer(28)};

timesT1Expired ATTRIBUTE
DERIVED FROM "GMI":nonWrapping64BitCounter;
BEHAVIOUR timesT1Expired-B BEHAVIOUR
  DEFINED AS
    Counter. Total number of times the local Timer T1 expired.;;
REGISTERED AS {DLM.aoi timesT1Expired(29)};

timesT3Expired ATTRIBUTE
DERIVED FROM "GMI":nonWrapping64BitCounter;
BEHAVIOUR timesT3Expired-B BEHAVIOUR
  DEFINED AS
    Counter. Total number of times local Timer T3 expired.;;
REGISTERED AS {DLM.aoi timesT3Expired(30)};

-- Parameters

fRMR PARAMETER
CONTEXT EVENT-INFO;
WITH SYNTAX DLM.FRMRSyntax;
BEHAVIOUR fRMR-B BEHAVIOUR
  DEFINED AS
    FRMR frame.
    Returned as additionalInformation in a communicationsAlarm notification
    when specificProblems has the value DLM.fRMRReceived.;;
REGISTERED AS {DLM.proi fRMR(1)};
```



Copyright International Organization for Standardization
Provided by IHS under license with ISO
No reproduction or networking permitted without license from IHS Not for Resale

## 5.9 The LAPB Single Link Protocol Connection Initial Values managed object

```
-- An sLPConnectionIVMO may be used to supply initial values for the
-- attributes of sLPConnection MOs. Different instances of sLPConnectionIVMO may
-- contain different initial values.
--
-- An sLPConnectionIVMO may be created and deleted explicitly by management operation.

sLPConnectionIVMO MANAGED OBJECT CLASS
DERIVED FROM "DMI":top;
CHARACTERIZED BY
   commonSLPConnection-P,
   sLPConnectionIVMO-P;
CONDITIONAL PACKAGES
   t3IVMO-P PRESENT IF optional Timer T3 of ISO 7776 is supported.;
REGISTERED AS {DLM.moi sLPConnectionIVMO(6)};

-- Packages

sLPConnectionIVMO-P PACKAGE
ATTRIBUTES
   sLPConnectionIVMOId GET;
; -- not registered

t3IVMO-P PACKAGE
BEHAVIOUR t3IVMO-P-B BEHAVIOUR
   DEFINED AS
      Present if the optional Timer T3 is supported.;;
ATTRIBUTES
   t3Timer REPLACE-WITH-DEFAULT
      GET-REPLACE;
ATTRIBUTE GROUPS
   timers
      t3Timer;
REGISTERED AS {DLM.poi t3IVMO-P(3)};

-- Name Bindings

sLPConnectionIVMO-sLPPM-Management NAME BINDING
SUBORDINATE OBJECT CLASS sLPConnectionIVMO AND SUBCLASSES;
NAMED BY
SUPERIOR OBJECT CLASS sLPPM AND SUBCLASSES;
WITH ATTRIBUTE sLPConnectionIVMOId;
BEHAVIOUR sLPConnectionIVMO-sLPPM-B BEHAVIOUR
   DEFINED AS
      The name binding which applies when an sLPConnectionIVMO
      managed object (or an instance of a subclass of the
      sLPConnectionIVMO MO class) can be created by
      management as a subordinate object of a sLPPM managed object
      (or subclass), and deleted by management.;;
CREATE;
DELETE ONLY-IF-NO-CONTAINED-OBJECTS;
REGISTERED AS {DLM.nboi sLPConnectionIVMO-sLPPM-Management(6)};

-- Attributes

sLPConnectionIVMOId ATTRIBUTE
WITH ATTRIBUTE SYNTAX DLM.NamingString;
MATCHES FOR EQUALITY;
BEHAVIOUR sLPConnectionIMVOId-B BEHAVIOUR
   DEFINED AS
      Naming attribute for the sLPConnectionIVMO managed object.;;
REGISTERED AS {DLM.aoi sLPConnectionIVMOId(31)};
```



Copyright International Organization for Standardization
Provided by IHS under license with ISO
No reproduction or networking permitted without license from IHS Not for Resale

## 5.10 The MAC Data Link Entity managed object

```
-- There may be multiple instances of the mACDLE managed object in a
-- system. Systems not supporting connections to LAN media are not
-- required to support the mACDLE and contained managed objects.
--
-- A mACDLE managed object may contain at most one instance of a
-- mac-specific MO derived from the generic mAC MO.  A mACDLE MO
-- may contain at most one dLSAP MO. The value of the
-- sap1Address attribute is of no significance. The cardinality of the
-- userEntityNames attribute is limited to one.
--
-- A mACDLE MO may be created and deleted explicitly by
-- management operation or created and deleted automatically as
-- part of system operation.
--
-- When the mACDLE MO is operable, the operationalState shall
-- have the value 'enabled'; otherwise it shall have the value 'disabled'.
-- Transitions of operationalState shall be reported using the
-- stateChange notification.

mACDLE MANAGED OBJECT CLASS
DERIVED FROM datalinkEntity;
REGISTERED AS {DLM.moi mACDLE(7)};

-- Name Bindings

-- IMPORT "GMI":communicationsEntity-subsystem NAME BINDING
-- datalinkEntity-datalinkSubsystem-Management NAME BINDING
```



Copyright International Organization for Standardization
Provided by IHS under license with ISO
No reproduction or networking permitted without license from IHS Not for Resale

## 5.11 The MAC managed object

-- The generic MAC MO from which media-specific MAC MOs may be derived.

```
mAC MANAGED OBJECT CLASS
DERIVED FROM "DMI":top;
CHARACTERIZED BY mAC-P PACKAGE
  BEHAVIOUR
    commonCreationDeletion-B,
    commonStateChange-B;
  ATTRIBUTES
    "DMI":operationalState GET,
    mACId GET;
  ATTRIBUTE GROUPS
    "DMI":state
      "DMI":operationalState,
    "GMI":counters;
  ACTIONS
    "GMI":activate,
    "GMI":deactivate;
  NOTIFICATIONS
    "DMI":objectCreation,
    "DMI":objectDeletion,
    "DMI":stateChange;;;
REGISTERED AS {DLM.moi mAC(8)};
```

**-- Name Bindings**

```
mAC-mACDLE-Automatic NAME BINDING
SUBORDINATE OBJECT CLASS mAC AND SUBCLASSES;
NAMED BY
SUPERIOR OBJECT CLASS mACDLE AND SUBCLASSES;
WITH ATTRIBUTE mACId;
BEHAVIOUR mAC-mACDLE-Automatic-B BEHAVIOUR
  DEFINED AS
    The name binding which applies when a mAC managed object (or
    an instance of a subclass of the mAC MO class) is created
    automatically by the operation of the system as a subordinate object
    of a mACDLE managed object (or subclass), and deleted
    automatically.;;
REGISTERED AS {DLM.nboi mAC-mACDLE-Automatic(7)};

mAC-mACDLE-Management NAME BINDING
SUBORDINATE OBJECT CLASS mAC AND SUBCLASSES;
NAMED BY
SUPERIOR OBJECT CLASS mACDLE AND SUBCLASSES;
WITH ATTRIBUTE mACId;
BEHAVIOUR mAC-mACDLE-Management-B BEHAVIOUR
  DEFINED AS
    The name binding which applies when a mAC managed object (or
    an instance of a subclass of the mAC MO class) can be created by
    management as a subordinate object of a mACDLE managed object
    (or subclass), and deleted by management.;;
CREATE;
DELETE ONLY-IF-NO-CONTAINED-OBJECTS;
REGISTERED AS {DLM.nboi mAC-mACDLE-Management(8)};
```

**-- Attributes**

```
framesReceivedOK ATTRIBUTE
DERIVED FROM "GMI":nonWrapping64BitCounter;
BEHAVIOUR framesReceivedOK-B BEHAVIOUR
  DEFINED AS
```



Copyright International Organization for Standardization
Provided by IHS under license with ISO
No reproduction or networking permitted without license from IHS Not for Resale

```
      Counter. Total number of frames sucessfully received.
      These are frames that passed address and protocol type filtering
      and include multicast frames. This provides a gross measurement
      of incoming MAC usage by the local system and
      information that can be used in conjunction with other counters
      to determine the ratio of error conditions to successful receives
      or to approximate average receive frame size.;;
REGISTERED AS {DLM.aoi framesReceivedOK(32)};

framesTransmittedOK ATTRIBUTE
DERIVED FROM "GMI":nonWrapping64BitCounter;
BEHAVIOUR framesTransmittedOK-B BEHAVIOUR
  DEFINED AS
      Counter. Total number of frames sucessfully transmitted.
      This provides a gross measurement of outgoing MAC
      usage by the local system and information that can be used in
      conjunction with other counters to determine the ratio of error
      conditions to successful transmits or to approximate average
      transmit frame size.;;
REGISTERED AS {DLM.aoi framesTransmittedOK(33)};

localMACAddresses ATTRIBUTE
WITH ATTRIBUTE SYNTAX DLM.MACAddresses;
MATCHES FOR EQUALITY, SET-COMPARISON, SET-INTERSECTION;
BEHAVIOUR localMACAddresses-B BEHAVIOUR
  DEFINED AS
      MAC address(es) of the local system.;;
REGISTERED AS {DLM.aoi localMACAddresses(34)};

mACAddress ATTRIBUTE
WITH ATTRIBUTE SYNTAX DLM.MACAddress;
MATCHES FOR EQUALITY, ORDERING;
BEHAVIOUR mACAddress-B BEHAVIOUR
   DEFINED AS
      Octet string of fixed length of 6 octets (48 bit MAC address) or 8
      octets (60 bit 802.6 MAC address). Used to represent a MAC
      address of a LAN or MAN station. This attribute is readable,
      and may also be writable if the specific use to which it is put
      permits modification of its contents.  See Annex B, MACAddress
      Attribute for further behaviour definition.;;
REGISTERED AS {IEEE 802 CommonDefinitions.partf attribute(7) macaddress(0)};

mACId ATTRIBUTE
WITH ATTRIBUTE SYNTAX DLM.NamingString;
MATCHES FOR EQUALITY;
BEHAVIOUR mACId-B BEHAVIOUR
  DEFINED AS The naming attribute for the mAC MO.;;
REGISTERED AS {DLM.aoi mACId(36)};

multicastFramesReceivedOK ATTRIBUTE
DERIVED FROM "GMI":nonWrapping64BitCounter;
BEHAVIOUR multicastFramesReceivedOK-B BEHAVIOUR
  DEFINED AS
      Counter. Number of multicast frames successfully received.
      In conjunction with total frames received, it provides a gross
      percentage of the MAC medium usage for multicast frames
      received by the local system.;;
REGISTERED AS {DLM.aoi multicastFramesReceivedOK(37)};

multicastFramesTransmittedOK ATTRIBUTE
DERIVED FROM "GMI":nonWrapping64BitCounter;
BEHAVIOUR multicastFramesTransmittedOK-B BEHAVIOUR
  DEFINED AS
```



Copyright International Organization for Standardization
Provided by IHS under license with ISO
No reproduction or networking permitted without license from IHS Not for Resale

Counter. Number of multicast frames transmitted.
It is a subset of the framesSent counter. In conjunction with total frames sent, it provides a gross percentage of the MAC medium usage for multicast frames transmitted by the local system.;;
REGISTERED AS {DLM.aoi multicastFramesTransmittedOK(38)};

octetsReceivedOK ATTRIBUTE
DERIVED FROM "GMI":nonWrapping64BitCounter;
BEHAVIOUR octetsReceivedOK-B BEHAVIOUR
DEFINED AS
Counter. Total number of MAC user octets sucessfully received. This does not include MAC headers. These are the octets from frames that passed address and protocol type filtering for both individual and multicast MAC addresses. When the framesReceived counter is used to calculate protocol overhead, the overhead plus octetsReceived provides a measurement of the amount of MAC bandwidth consumed by frames received by the local system.;;
REGISTERED AS {DLM.aoi octetsReceivedOK(39)};

octetsTransmittedOK ATTRIBUTE
DERIVED FROM "GMI":nonWrapping64BitCounter;
BEHAVIOUR octetsTransmittedOK-B BEHAVIOUR
DEFINED AS
Counter. Total number of MAC user octets sucessfully transmitted. This does not include MAC headers. When the number of frames sent is used to calculate protocol overhead, the overhead plus octetsSent provides a measurement of the amount of MAC bandwidth (over time) consumed by frames sent by the local system. The counter is not incremented until a frame has been successfull transmitted.;;
REGISTERED AS {DLM.aoi octetsTransmittedOK(40)};



Copyright International Organization for Standardization
Provided by IHS under license with ISO
No reproduction or networking permitted without license from IHS Not for Resale

## 5.12 The LLC Data Link Entity managed object

```
-- There may be multiple instances of the ILCDLE managed object in a
-- system. Systems not supporting LLC procedures are not required
-- to support the ILCDLE and contained managed objects.
--
-- An ILCDLE managed object may contain instances of
-- llc-specific connectionless and connection-mode protocol machine
-- MOs derived from the generic ILCCOPM and ILCCLPM MO. An
-- ILCDLE MO may contain multiple dLSAP MOs. The cardinality of the
-- userEntityNames attribute is limited to one.
--
-- An ILCDLE MO may be created and deleted explicitly by
-- management operation or created and deleted automatically as
-- part of system operation.
--
-- When the ILCDLE MO is operable, the operationalState shall
-- have the value 'enabled'; otherwise it shall have the value 'disabled'.
-- Transitions of operationalState shall be reported using the
-- stateChange notification.

ILCDLE MANAGED OBJECT CLASS
DERIVED FROM datalinkEntity;
REGISTERED AS {DLM.moi ILCDLE(9)};

-- Name Bindings

-- IMPORT "GMI":communicationsEntity-subsystem NAME BINDING
-- datalinkEntity-datalinkSubsystem-Management NAME BINDING
```



Copyright International Organization for Standardization
Provided by IHS under license with ISO
No reproduction or networking permitted without license from IHS Not for Resale

## 5.13 The LLC Connectionless Protocol Machine managed object

```
-- The generic LLC Connectionless PM MO from which protocol-specific LLC
-- PM MOs may be derived.

ILCCLPM MANAGED OBJECT CLASS
DERIVED FROM "GMI":clProtocolMachine;
CHARACTERIZED BY ILCCLPM-P PACKAGE
  BEHAVIOUR
    commonCreationDeletion-B,
    commonStateChange-B;
  ATTRIBUTE GROUPS
    "DMI":state
      "DMI":operationalState;
  ACTIONS
    "GMI":activate,
    "GMI":deactivate;
  NOTIFICATIONS
    "DMI":objectCreation,
    "DMI":objectDeletion,
    "DMI":stateChange;;;
REGISTERED AS {DLM.moi ILCCLPM(10)};
```

**-- Name Bindings**

```
-- IMPORT "GMI":clProtocolMachine-entity NAME BINDING

ILCCLPM-ILCDLE-Management NAME BINDING
SUBORDINATE OBJECT CLASS ILCCLPM AND SUBCLASSES;
NAMED BY
SUPERIOR OBJECT CLASS ILCDLE AND SUBCLASSES;
WITH ATTRIBUTE "GMI":clProtocolMachineId;
BEHAVIOUR ILCCLPM-ILCDLE-Management-B BEHAVIOUR
  DEFINED AS
    The name binding which applies when an ILCCLPM managed object
    (or an instance of a subclass of the ILCCLPM MO class) can be
    created by management as a subordinate object of an ILCDLE
    managed object (or subclass), and deleted by management.;;
CREATE;
DELETE ONLY-IF-NO-CONTAINED-OBJECTS;
REGISTERED AS {DLM.nboi ILCCLPM-ILCDLE-Management(9)};
```



Copyright International Organization for Standardization
Provided by IHS under license with ISO
No reproduction or networking permitted without license from IHS Not for Resale

## 5.14 The LLC Connection-mode Protocol Machine managed object

```
-- The generic LLC Connection-mode PM MO from which protocol-specific
-- LLC PM MOs may be derived.

ILCCOPM MANAGED OBJECT CLASS
DERIVED FROM "GMI":coProtocolMachine;
CHARACTERIZED BY ILCCOPM-P PACKAGE
  BEHAVIOUR
    commonCreationDeletion-B,
    commonStateChange-B;
  ATTRIBUTE GROUPS
    "DMI":state
      "DMI":operationalState;
  ACTIONS
    "GMI":activate,
    "GMI":deactivate;
  NOTIFICATIONS
    "DMI":objectCreation,
    "DMI":objectDeletion,
    "DMI":stateChange;;;
REGISTERED AS {DLM.moi ILCCOPM(11)};

-- Name Bindings

-- IMPORT "GMI":coProtocolMachine-entity NAME BINDING

ILCCOPM-ILCDLE-Management NAME BINDING
SUBORDINATE OBJECT CLASS ILCCOPM AND SUBCLASSES;
NAMED BY
SUPERIOR OBJECT CLASS ILCDLE AND SUBCLASSES;
WITH ATTRIBUTE "GMI":coProtocolMachineId;
BEHAVIOUR ILCCOPM-ILCDLE-Management-B BEHAVIOUR
  DEFINED AS
    The name binding which applies when a ILCCOPM managed object
    (or an instance of a subclass of the ILCCOPM MO class) can be
    created by management as a subordinate object of a ILCDLE
    managed object (or subclass), and deleted by management.;;
CREATE;
DELETE ONLY-IF-NO-CONTAINED-OBJECTS;
REGISTERED AS {DLM.nboi ILCCOPM-ILCDLE-Management(10)};
```



Copyright International Organization for Standardization
Provided by IHS under license with ISO
No reproduction or networking permitted without license from IHS Not for Resale

# 6 ASN.1 module

```
DLM {joint-iso-itu datalink-layer(15) management(0) asn1Module(2) 0}
DEFINITIONS IMPLICIT TAGS ::= BEGIN

IMPORTS
   GroupObjects, ObservedValue, PerceivedSeverity
      FROM Attribute-ASN1Module {joint-iso-itu ms(9) smi(3) part2(2) asn1Module(2) 1}
   SetInfoStatus, AttributeId, ObjectInstance
      FROM CMIP-1 {joint-iso-itu ms(9) cmip(1) modules(0) protocol(3)};

-- Note: In this standard, the identifier joint-iso-itu is used as a synonym for the identifier joint-iso-ccitt and has
-- the same value (2), defined in ISO/IEC 8824.

-- "infrastructure" object identifier definitions

datalink-layer OBJECT IDENTIFIER ::= {joint-iso-itu datalink-layer(15)}

dloi OBJECT IDENTIFIER ::= {datalink-layer management(0)}

sseoi OBJECT IDENTIFIER ::= {dloi standardSpecificExtension(0)}
moi OBJECT IDENTIFIER ::= {dloi objectClass (3)}
poi OBJECT IDENTIFIER ::= {dloi package (4)}
proi OBJECT IDENTIFIER ::= {dloi parameter (5)}
nboi OBJECT IDENTIFIER ::= {dloi nameBinding (6)}
aoi OBJECT IDENTIFIER ::= {dloi attribute (7)}
agoi OBJECT IDENTIFIER ::= {dloi attributeGroup (8)}
acoi OBJECT IDENTIFIER ::= {dloi action (9)}
noi OBJECT IDENTIFIER ::= {dloi notification (10)}


--
-- value assignments for Data Link layer specificProblems
--

fRMRReceived OBJECT IDENTIFIER ::=
   {sseoi specificProblems(11) fRMRReceived(5)}

fRMRReasons OBJECT IDENTIFIER ::=
   {sseoi specificProblems(11) fRMRReasons(6)}

fRMRReasonsControlFieldUndefinedOrUnimplemented OBJECT IDENTIFIER ::=
   {sseoi specificProblems(11) fRMRReasons(6)
    controlFieldUndefinedOrUnimplemented(1)}

fRMRReasonsFormatError OBJECT IDENTIFIER ::=
   {sseoi specificProblems(11) fRMRReasons(6) formatError(2)}

fRMRReasonsInfoFieldLengthGreaterThanMaximum OBJECT IDENTIFIER ::=
   {sseoi specificProblems(11) fRMRReasons(6)
    infoFieldLengthGreaterThanMaximum(3)}

fRMRReasonsInvalidNR OBJECT IDENTIFIER ::=
   {sseoi specificProblems(11) fRMRReasons(6) invalidNR(4)}

fRMRReasonsNonSpecific OBJECT IDENTIFIER ::=
   {sseoi specificProblems(11) fRMRReasons(6) nonSpecific(5)}
```



Copyright International Organization for Standardization
Provided by IHS under license with ISO
No reproduction or networking permitted without license from IHS Not for Resale

```
--
-- value assignments for Data Link layer specific errorIds for activate action processingFailure errors.
--

activateFailure OBJECT IDENTIFIER ::=
   {sseoi action(9) activate(1) errors(1) processingFailure(1)}

activateFailureInsufficientResources OBJECT IDENTIFIER ::=
   {activateFailure insufficientResources(1)}

activateFailureProviderDoesNotExist OBJECT IDENTIFIER ::=
   {activateFailure providerDoesNotExist(2)}

activateFailureProviderNotAvailable OBJECT IDENTIFIER ::=
   {activateFailure providerNotAvailable(3)}

activateFailureRequiredServiceNotAvailable OBJECT IDENTIFIER ::=
   {activateFailure requiredServiceNotAvailable(4)}

activateFailureSystemSpecific OBJECT IDENTIFIER ::=
   {activateFailure systemSpecific(5)}

--
-- other definitions
--

datalinkSubsystemId-Value GraphicString ::= "datalinkSubsystem"

FRMRSyntax ::= OCTET STRING
NamingString  ::= GraphicString
Integer ::= INTEGER

InterfaceType ::= ENUMERATED{
   dTE(0),
   dCE(1)}

interfaceTypeDefault InterfaceType ::= dTE

MACAddress ::= OCTET STRING -- Minimum length 6 octets

-- If the MAC address is a 48-bit address the minimum length of the octet string shall be 6 octets.
-- If the MAC address is a 60-bit address the minimum length of the octet string shall be 8 octets.
-- The octet encoding is derived from the hexidecimal display representation order for the MAC -- address,
-- AB-CD-EF-GH-IJ-KL for the 48-bit address;  AB-CD-EF-GH-IJ-KL-MN-OP for the 60-bit -- address format.
-- The octets are encoded as follows:
-- The first pair of hexidecimal digits, AB, are encoded in the first octet.
-- The second pair, CD, is encoded in the second octet, etc. (See Annex D, clause D.1.2
-- "MACAddress Attribute" for definition of 60-bit hexidecimal display format)

MACAddresses ::= SET OF MACAddress

MaximumIFrameSize ::= INTEGER
   -- in bits, 1080 (135 octets) minimum

Octet ::= OCTET STRING(SIZE(1))
OctetString ::= OCTET STRING

SequenceModulus ::= Integer

SLPProtocolState ::= ENUMERATED{
   disconnectedPhase(0),
   linkdisconnection-phase(1),
   link-setup-phase(2),
```



Copyright International Organization for Standardization
Provided by IHS under license with ISO
No reproduction or networking permitted without license from IHS Not for Resale

```
    information-Transfer-phase(3),
    frame-Reject-condition(4),
    busy-condition(5),
    sent-Reject-condition(6),
    system-Parameters-and-error-recovery(7)}

WindowSize ::= CHOICE{
    modulo8ws     [0] INTEGER(1..7),     -- for modulo 8
    modulo128ws  [1] INTEGER(1..127)} -- for modulo 128

END
```



Copyright International Organization for Standardization
Provided by IHS under license with ISO
No reproduction or networking permitted without license from IHS Not for Resale

# 7 Conformance

## 7.1 Conformance requirements to ISO/IEC 10742

An implementation for which conformance to this International Standard as a managed implementation is claimed shall

a) support the datalinkSubsystem MO;
b) for each supported MO, support at least one name binding defined in this International Standard, for which the MO is the subordinate.

## 7.2 Protocol specific conformance requirements

**7.2.1** An implementation claiming conformance to the management operation of ISO 7776 as a managed implementation shall:

a) conform to ISO/IEC 10742 as defined in 7.1;
b) support the x25DLE MO, the dLSAP MO, the sLPPM MO and the sLPConnection MO.

**7.2.2** An implementation claiming conformance to the management operation of an ISO/IEC 8802-2 connectionless-mode LLC as a managed implementation shall:

a) conform to ISO/IEC 10742 as defined in 7.1;
b) support the lLCDLE MO, the dLSAP MO and at least one class derived from the lLCCLPM MO.

**7.2.3** An implementation claiming conformance to the management operation of an ISO/IEC 8802-2 connection-mode LLC as a managed implementation shall:

a) conform to ISO/IEC 10742 as defined in 7.1;
b) support the lLCDLE MO, the dLSAP MO and at least one class derived from the lLCCOPM MO.

**7.2.4** An implementation claiming conformance to the management operation of a ISO 8802 MAC as a managed implementation shall:

a) conform to ISO/IEC 10742 as defined in 7.1;
b) support the mACDLE MO, the dLSAP MO and at least one class derived from the mAC MO.

NOTE — Behaviour clauses defined in this standard may not always be testable. Care should be exercised when defining behaviour test suites in order not to impose additional constraints to those defined in this standard for implementations.



Copyright International Organization for Standardization
Provided by IHS under license with ISO
No reproduction or networking permitted without license from IHS
Not for Resale

# Annex A
(normative)

# Allocation of Object Identifiers

The following Object Identifiers have been allocated by the normative main body of this International Standard.

joint-iso-itu
  datalink-layer (15)
    management (0)
      standardSpecificExtension (0)
        action (9)
          activate (1)
            errors (1)
              processingFailure (1)
                insufficientResources (1)
                providerDoesNotExist (2)
                providerNotAvailable (3)
                requiredServiceNotAvailable (4)
                systemSpecific (5)
        specificProblems (11)
          alignmentError (1)
          carrierCheckFailure (2)
          frameTooLong (4)
          fRMRReceived (5)
          fRMRReasons (6)
            controlFieldUndefinedOrUnimplemented (1)
            formatError (2)
            infoFieldLengthGreaterThanMaximum (3)
            invalidNR (4)
            nonSpecific (5)
        asn1Module (2)
          (0)
        objectClass (3)
          datalinkSubsystem (1)
          datalinkEntity (2)
          x25DLE (3)
          sLPPM (4)
          sLPConnection (5)
          sLPConnectionIVMO (6)
          mACDLE (7)
          mAC (8)
          lLCDLE (9)
          lLCCLPM (10)
          lLCCOPM (11)
          dLSAP (13)
        package (4)
          mLP-P (1)
          t3-P (2)
          t3IVMO-P (3)
          mT2-P (5)
        parameter (5)
          fRMR (1)
        nameBinding (6)
          datalinkEntity-datalinkSubsystem-Management (1)
          dLSAP-datalinkEntity-Management (2)
          sLPPM-x25DLE-Management (3)
          sLPConnection-sLPPM-Automatic (4)
          sLPConnection-sLPPM-Management (5)
          sLPConnectionIVMO-sLPPM-Management (6)



Copyright International Organization for Standardization
Provided by IHS under license with ISO
No reproduction or networking permitted without license from IHS Not for Resale

mAC-mACDLE-Automatic (7)
mAC-mACDLE-Management (8)
ILCCLPM-ILCDLE-Management (9)
ILCCOPM-ILCDLE-Management (10)
resourceTypeId-mACDLE-Automatic(12) (In Annex B)
resourceTypeId-mACDLE-Automatic(13) (In Annex B)
eWMAMetricMonitor-ILLCDLE-Management(13)(In Annex B)
eWMAMetricMonitor-ILLCDLE-Management(14)(In Annex B)
attribute (7)
fRMRsReceived (1)
fRMRsSent (2)
iFramesReceived (3)
iFramesSent (4)
rEJsReceived (5)
rEJsSent (6)
rNRsReceived (7)
rNRsSent (8)
sABMsReceived (9)
sABMsSent (10)
providerEntityNames (11)
mT1Timer (12)
mT2Timer (13)
mT3Timer (14)
fCSErrorsReceived (15)
iFrameDataOctetsReceived (16)
iFrameDataOctetsSent (17)
interfaceType (18)
k (19)
n1 (20)
n2 (21)
pollsReceived (22)
sLPProtocolState (23)
sequenceModulus (24)
t1Timer (25)
t2Timer (26)
t3Timer (27)
t4Timer (28)
timesT1Expired (29)
timesT3Expired (30)
sLPConnectionIVMOId (31)
framesReceivedOK (32)
framesTransmittedOK (33)
localMACAddresses (34)
mACId (36)
multicastFramesReceivedOK (37)
multicastFramesTransmittedOK (38)
octetsReceivedOK (39)
octetsTransmittedOK (40)
attributeGroup (8)
timers (1)
action (9)
notification (10)



Copyright International Organization for Standardization
Provided by IHS under license with ISO
No reproduction or networking permitted without license from IHS Not for Resale

# Annex B
(normative)

# IEEE 802.1F Common Models and Generic Definitions

## B.1 Introduction

This Annex identifies management information and procedures developed for IEEE 802 LAN/MAN Standards. It is applicable across the entire family of IEEE LAN/MAN standards but is also applicable for other SC6 standards.

NOTE — The information in Annex B is taken out of IEEE 802.1F/D13.

## B.2 Common Models

Note: Clause B.2 is only informative

### B.2.1 Resource Type Managed Object

The resource type managed object class is used within IEEE 802 LAN/MAN resources to identify information about the managed system such as resource name, manufacturer name, manufacturer OUI, and manufacturer product version. This managed object is used to identify any resource within a LAN/MAN system. The information is provided by the manufacturer, however, and is read-only.

#### B.2.1.1 Containment of Resource Type Managed Object

A single instance of the resource type managed object may be contained within any managed object which represents a resource.

### B.2.2 MACAddress Attribute

A common representation for MAC address attributes is specified by this tandard. Consistent with section 5.2.2 of the 802.1 Overview and Architecture, 48-bit MAC addresses have a fixed length of 6 octets.

Consistent with section 6.5.1.2.1.2 of the 802.6 DQDB specification, 60 bit MAC addresses have a fixed length of 8 octets. For purposes of this International Standard a hexidecimal display representation is defined for 60 bit addresses, AB-CD-EF-GH-IJ-KL-MN-OP, similar to 48-bit addresses. The left-most hexidecimal digit represents the 4 bit address type field. The remaining fifteen hexidecimal digits, "B" through "P", represent the 60 bit MAC address, as defined in ANSI/IEEE Standard 802.6-1990.

NOTE — As in the 48-bit display representation used in IEEE 802-1990, this 60-bit display representation is not the form of the MAC Address attribute, but is used only to map the four bit hexadecimal digits of the 60-bit MAC address attribute.

Since the MAC address address attribute is represented by a fixed length octet string, the attribute type (48 bit vs. 60 bit) can be determined by examining the attribute length. An attribute value 6 octets in length is a 48 bit MAC address; an attribute value 8 octets in length is a 60 bit MAC address.

### B.2.3 EWMA Metric Monitor Managed Object

The Exponentially Weighted Moving Average (EWMA) metric monitor managed object can be used within IEEE 802 LAN/MAN managed systems. This managed object is used to observe any attribute which behaves like a counter (which can be used as input for a derived gauge) or gauge. If the observed attribute is a counter the EWMA metric monitor managed object may derive a gauge value from the counter. In this case the derived gauge value is the difference between successive observations of the counter. If the observed attribute is a gauge the derived gauge value will be qual to the observed attribute at the time of each observation. The EWMA metric monitor managed object may have a severity indicating gauge-threshold applied to the gauge attribute.



Copyright International Organization for Standardization
Provided by IHS under license with ISO
No reproduction or networking permitted without license from IHS Not for Resale

The managed object may emit a quality of service alarm notification whenever the threshold value is crossed. The alarm notification can be generated on either increasing or decreasing threshold crossings (with hysteresis). Observed data is smoothed by the EWMA smoothing algorithm. Depending upon the initialization of attributes, this summarization function can be used to provide either an exponentially weighted behaviour or a simple difference (between scans) behaviour.

#### B.2.3.1 Model for EWMA Metric Monitor

The EWMA metric monitor values of an attribute in an observed managed object. The observed attribute is monitored at intervals specified by the granularity period. A gauge value (derived gauge) is derived from the values of the observed attribute. The value of the derived gauge attribute shall remain the same until the next observation.

The observed attribute can be monitored either as a counter or as a gauge. If the counter difference package is present the observed attribute is treated as a counter and the counter difference algorithm is applied to derive the gauge value.If the counter difference package is absent the observed attribute is treated as a gauge value. No other knowledge is assumed regarding the characteristics of the observed attribute.

An estimate of the mean of the derived gauge is calculated. A threshold is applied to the estimate of the mean value. If the threshold value is exceeded (subject to hysteresis) an alarm notification shall be generated (ISO/IEC 10164-7).

#### B.2.3.2 Properties of EWMA Metric Monitor Managed Objects

The EWMA metric monitor managed object type defined in this International Standard has attributes for

- the identification of the EWMA metric monitor managed object;
- the identification of a managed object to be monitored and its attribute to be observed;
- the frequency of observations;
- the indication of the result value of the observations, and;
- the threshold value(s) at which to report increasing/decreasing alarms;

EWMA metric monitor managed objects may be created as they are needed. If more than one observation is to be made, then a separate EWMA metric monitor managed object shall be created for each such observation. If the managed system creates an EWMA metric monitor managed object, a notification indicating that an object was created may be emitted.

The EWMA metric monitor managed object shall have an attribute to identify the managed object under observation and an attribute to identify the observed attribute.

The EWMA metric monitor managed object shall have an attribute indicating the value of the observed attribute (actual or derived) and an attribute that indicates the value of the results of the EWMA algorithm.

The lifetime of the EWMA metric monitor managed object may be controlled by the managing system by requesting the managed system to delete the EWMA metric monitor managed object. If the managed system deletes an EWMA metric monitor managed object, a notification indicating object deletion may be emitted.

#### B.2.3.3 Threshold Model

The EWMA metric monitor managed object is used to summarize the value of either a derived or an actual gauge within an IEEE 802 managed system. The summarized value may be compared to threshold level values in order to trigger the generation of notifications when threshold level values are crossed. Thresholds generated in this manner are termed severity indicating thresholds.

The severity indicating threshold attribute type has all the behaviour of a gauge-threshold attribute type, as defined in clause 8.4.2 of ISO/IEC 10165-2. As an enhancement to the syntax of the gauge-threshold attribute type it adds an optional severity indication parameter to the syntax of both the notifyHigh and notifyLow submembers within each threshold level member.

The EWMA metric monitor managed object may have zero, one, or more threshold levels. Each of these threshold levels may be triggered on either increasing or decreasing values. Each threshold level has a notify-high and notify-low switch, which can be used to implement hysteresis. The threshold can be setup to generate



Copyright International Organization for Standardization
Provided by IHS under license with ISO
No reproduction or networking permitted without license from IHS Not for Resale

notifications when the mean of the observed value crosses either switch-boundary (with one notification being "clear" if both boundaries are selected).

NOTE — Alarm notifications will not be emitted if the granularity period is set to zero or if all threshold level attributes are removed. Alarm notifications will not be emitted if the administrative state is set to "locked".

#### B.2.3.4 Relationship of EWMA Metric Monitor Managed Objects to other Managed Objects

**Relationship Attributes**

The managed system uses internal mechanisms for conveying the observed attribute values to the metric monitor managed object.

The EWMA metric monitor managed object has a relationship attribute to allow the identification of the observed managed objects and its attribute to be observed. The value of this relationship attribute shall be read-write and is initialized at the time of EWMA metric monitor managed object creation. The relationship of an EWMA metric monitor managed object with an observed managed object is a one-way asymmetric relationship.

**Containment Relationships**

The EWMA metric monitor managed object may either be contained within the observed managed object or within some other managed object. Multiple instances of the managed object may be contained within any other managed object.

## B.3 Generic Definitions

NOTE — Clause B.3 is only informative.

### B.3.1 Managed Objects

#### B.3.1.1 resourceTypeId managed object class

The Resource TypeId managed object class can be used within IEEE 802 LAN/MAN resources to identify information about the managed system. This managed object can be used to identify any resource within a LAN/MAN system. The information is provided by the manufacturer, however, and is read-only. No restrictions are placed upon the containment hierarchy for this class.

**resourceTypeId Behaviour**

The attributes of this managed object class are read-only.

**Attributes of resourceTypeId**

resourceTypeIdName

This attribute is used to contain the name of the resourceTypeId managed object. This contains a fixed value, "RTID".

*resourceInfo*

This attribute is used to describe the resource. The attribute is structured and contains ManufacturerOUI, ManufacturerName, ManufacturerProductName, and ManufacturerProductVersion.

#### B.3.1.2 scanner managed object class

The scanner managed object class is a superclass from which the ewmaMetricMonitor managed object class is derived. It defines the facilities for periodically sampling the value of a specified attribute within a specified object. The scanner managed object class is never instantiated.

The scanner managed object class has a single conditional package:



Copyright International Organization for Standardization
Provided by IHS under license with ISO
No reproduction or networking permitted without license from IHS Not for Resale

- configuration events reporting package (present only if configuration events reporting is supported).

NOTE — The scanner object has been retained as a separate class in this International Standard in order to provide consistency with the scanner object defined in ISO/IEC 10164-13. This definition of scanner does not support all of the packages defined in the ISO version. In particular, scheduling is not supported. Also, while the scope of monitoring allowed by scanner is very flexible, the EWMA metric monitor managed object class limits the scope to a single gauge or derived-gauge attribute in a single managed object.

**scanner Behaviour**

A managed object of this class represents the ability to retrieve values of some attribute of some other managed object and produce summary information from those values. This summary information may be made available in attributes, notifications, action results, or some combination of these. Summary information may consist of observed attribute values or statistics calculated from these values.

Observed attribute values are retrieved during a 'scan', which is initiated periodically, at the end of each granularity period.

The granularity period attribute indicates the length of the granularity period. The granularity period in the scanner managed object class shall not be set unless the administrative state is set to locked.

NOTE — A system does not need to support all time unit values for time-based attributes. If an agent does not support a specific time unit, it can respond with the CMIS inappropriate attribute value indication.

The administrative state attribute is used to suspend or resume the scanning function. If administrative state has the value 'unlocked', the scanner is ready to perform scans. If administrative state has the value 'locked', the scanner is administratively prohibited from performing scans.

The operational state attribute represents the operational capability of the scanner to perform its functions.

If the configuration events reporting package is present, then changes to the granularity period shall cause attribute value change notifications to be emitted, and changes to operational state or administrative state shall cause state change notifications to be emitted. Such notifications shall include a report of all scanner attribute values.

NOTES

1 — It is recommended that the observed attribute be scanned within the granularity period. If a new scan is initiated when another scan is in progress, then it is a local issue to resolve the conflict. The outcome is not deterministic.

2 — The scan may occur at slightly different times for each observed attribute, but the time skew between the start of a scan and the scan time for a given attribute in the scan should be approximately equal between successive scans.

The scanner begins the collection of data immediately upon its creation. The scanner verifies that the granularity period has elapsed since the last scan. If the granularity period has elapsed, the scanner observes and collects the current attribute values of the specified managed objects and attributes to be observed. The scanner continues to scan at the end of each granularity period until it is deleted.

If the granularity period is zero, then the scanner will not emit notifications on a periodic basis.

**Attributes of scanner**

scannerId

This attribute is used to name the scanner managed object class (used for naming).

operationalState

This attribute defines the operational state of the managed object as defined in ISO/IEC 10164-2;

administrativeState

This attribute represents the administrative state of the metric managed object as defined in ISO/IEC 10164-2. The following AdministrativeState values are defined:



Copyright International Organization for Standardization
Provided by IHS under license with ISO
No reproduction or networking permitted without license from IHS Not for Resale

a) Unlocked - the metric managed object is ready to monitor;
b) Locked - the monitoring process in the metric managed object is stopped.

granularityPeriod

This attribute represents the time between scans.

### B.3.1.3 eWMAMetricMonitor managed object class

To report events the eWMAMetricMonitor managed object uses the Alarm Report Service defined in ISO/IEC 10164-4.

Attribute values of managed objects can be read or modified in accordance with the operations described in ISO/IEC 10165-1.

The eWMAMetricMonitor managed object class is defined as a subclass of the scanner managed object class.

The eWMAMetricMonitor managed object class monitors the values of a gauge or counter type attribute of an observed managed object. The presence or absense of the counter difference package determines how the output of the data conversion process is derived from the observed attribute. If the counter difference package is not present, the derived gauge attribute value contains the last observed value of the observed attribute. If the package is present the derived gauge value contains the value of the difference between two successive observations of observed attribute values.

An estimate of the mean of the derived gauge is calculated using the EWMA algorithm. The EWMA algorithm has the property that, given the proper choice of attributes, both exponential smoothing and simple difference gauges can be implemented. A threshold is applied to the estimate of the mean for the purpose of generating alarm notifications of type quality of service. The relationship attributes for the gauge monitor metric managed object are observed managed object instance and observed attribute id.

**eWMAMetricMonitor Behaviour**

An attribute to be observed is specified by the observedAttributeId of the managd object identified by observedManagedObjectInstance. This observed attribute is monitored at intervals specified by the granularity period. A gauge value (derivedGauge) is derived from the values of the observed attribute. The value of the derived gauge attribute shall remain the same until the next observation.

The calculation of the derived gauge attribute value depends on the type of the observed attribute. If the observed attribute is of gauge type, the derived gauge attribute contains the last observed value of the observed attribute. If the observed attribute is a counter, the derived gauge contains the value of the counter difference between two successive observations of the counter.

The presence of the counter difference package determines how the output of the data conversion process is derived from the observed attribute. If the package is present, the observed attribute is considered a counter; otherwise it a considered a gauge.

If the observed attribute is a gauge, the units of the derived gauge are the same as the units of the observed gauge.

If the observed attribute is a counter, the units of the derived gauge is related to the interval between observations (granularityPeriod). For example, if the derived gauge value is for a counter of messages observed over 15 minutes and the derived gauge has a value of 60, then the derived gauge value represents 60 messages per 15 minutes, and not 4 messages per minute.

An estimate of the mean of the derived gauge attribute (estimateOfMean) is calculated using the exponentially weighted moving average (EWMA) algorithm. The value of the estimate of mean remains the same until the next observation. The estimate of mean is updated using subsequent scanned values of the derived gauge attribute, taken over a period specified by the value of the moving time period.

This managed object class also contains a severity indicating gauge threshold, with its associated behaviour. Threshold crossing notifications are triggered by the estimate of mean attribute value crossing a severity indicating gauge threshold level. As a result of a threshold crossing, a QOS Alarm Report is generated with



Copyright International Organization for Standardization
Provided by IHS under license with ISO
No reproduction or networking permitted without license from IHS Not for Resale

probable cause threshold crossing, and with the perceived severity parameter having the value stored in the severity indicator attribute value.

NOTE — There is no requirement that the moving time period and granularity period have the same units. Choice of a common time unit base may more efficient in some implementations, but is not required by this standard.

The severity indicating gauge threshold is applied to the estimate of mean attribute.

When an EWMA metric monitor managed object instance is created, the following shall be specified

—The scanner id, observed managed object instance, observed attribute id;

—The granularity period (i.e., time between observations of the observed attribute);

—The severity indicating gauge threshold (i.e., the threshold levels to be applied to the estimate of mean attribute value for generation of quality of service alarm types).

—The moving time period required by the EWMA algorithm.

—The initial value for the estimate of mean.

If the counter difference package is absent, the observed attribute is treated as a gauge.;

If the counter difference package is present, then the data capture process is derived by the counter difference package behaviour. Before the metric managed object instance can enter the on-duty condition, it shall ensure that counter[T-GP] is initialized.;

If the counter overflow package is present, then the metric object shall ensure that the value of the modulus value attribute is initialized before entering the on-duty condition.;

If the observed attribute id references an attribute that is not of gauge or counter type, the creation shall fail andthe CMIS error "invalid attribute value" shall be returned.

The state change notification shall be applied to the administrative state, operational state, and availability status if the configuration events reporting package is present.

The lifetime of the metric object may be controlled by the managing system by requesting the managed system to delete the metric object.

If the managed system deletes a metric object and the configuration events reporting package is present, a notification indicating managed object deletion is emitted. The notification shall include the values of the attributes of the metric object at the time of deletion.

All attributes of the EWMA Metric Monitor managed object class, including optional attributes of the counter difference and counter overflow packages may only be modified if the adminstrative state is locked. If the configuration events reporting package is present, modifications of these attributes shall result in an attribute value change notification. All attributes shall be reported when such notifications are emitted.

NOTE — It is the responsibility of the manager to assure that the estimate of mean is reinitialized if the scan interval is changed.

The managed object will emit a quality of service alarm (QOS) notification whenever the value of the estimate of the mean attribute triggers the corresponding threshold. This notification will contain the following attributes:

—the estimate of mean attribute will be reported in the observed value element;

—the observed managed object instance and observed attribute identifier will be reported in the monitored attributes parameter.



Copyright International Organization for Standardization
Provided by IHS under license with ISO
No reproduction or networking permitted without license from IHS Not for Resale

**Attributes of EWMA metric Monitor**

observedManagedObjectInstance

This attribute is used to identify the instance of the managed object that contains the observed attribute.

observedAttributeIdentifier

This attribute is used to identify the observed attribute of the observed managed object.

derivedGauge

This attribute contains the gauge value derived from the values of the observed attribute. If the observed attribute is a gauge then this attribute contains the value of the latest observation. If the counter difference package is present, then this attribute's value is the difference between successive observations of the observed attribute.

estimateOfMean

This attribute contains the estimate of the mean calculated by the EWMA algorithm. The initial value of this attribute shall be supplied upon creation of the managed object for use in initialising the algorithm. The attribute may be modified after creation of the managed object in order to re-initialise the EWMA algorithm.

severityIndicatingGaugeThreshold

This attribute contains the threshold levels which are to be applied to the Estimate of the Mean attribute. It shall be initialised when the managed object is created and may be modified.

movingTimePeriod

This attribute contains the effective time period over which values are scanned to calculate an estimate of the mean. This attribute shall be initialised when the managed object is created and may be subsequently modified.

NOTE — Choice of time units for moving time period is not constrained by the choice of time units for granularity period. It is recommended that the same time units be chosen for efficiency within agent systems. If the value of the moving time period is greater than the value specified for the granularity period attribute, the output of the EWMA algorithm will not be useful.

## B.3.2 Packages

The conditional packages which are present are determined at the time of creation, and they are used to control the behaviour of managed object instances.

### B.3.2.1 Counter Difference Package

This package defines the behaviour for deriving a gauge value from an observed attribute that is a wrap counter. The gauge value derived is the difference between the observed counter values for two successive observations. If this package is included, the observed attribute shall be interpreted to be a counter. When the counter difference package is present, the first scan interval subsequent to either creation or transition from unlocked to locked state is treated in a special way. Since the value of the derived gauge does not become valid until the completion of the first scan interval, any attempt to read the derived gauge during this period will receive an error indication. Likewise, if the difference between successive observations is negative, any attempt to read the derived gauge will receive an error indication. The observed value retained by the metric monitor managed object is to be used in calculating the next difference.

NOTE — It is recommended that a gauge not be derived from a resettable counter which may be reset frequently. The resetting of a counter during a granularity period will result in an invalid gauge value for that granularity period. Therefore, gauges should only be derived from resettable counters if the time between resets is significantly greater than the granularity period.

**Counter Difference Behaviour**

See clause B.4 for detailed behaviour.



Copyright International Organization for Standardization
Provided by IHS under license with ISO
No reproduction or networking permitted without license from IHS Not for Resale

**Counter Difference Attributes**

counterTMinusGP

This attribute is used in calculating counter differences for counters. It contains the value of the counter captured by the latest observation. This value shall be initialised upon creation if the observed attribute is a counter.

### B.3.2.2 Configuration Events Reporting Package

The configuration events reporting package contains no attributes.

This package contains the following notifications:

- state change,
- attribute value change,
- object creation, and
- object deletion

**Configuration Events Reporting Behaviour**

If the scanner managed object (or any subclass which is derived from scanner) is created or deleted, a notification shall be generated. If a change is detected in administrative state (in this International Standard changes can only be generated for internal causes), a state change notification shall be emitted. If changes occur to the granularity period, attribute value change notifications shall be emitted. This package is most likely required in multiple manager environments.

**Configuration Events Reporting Attributes**

The configuration events reporting package has no attributes.

### B.3.2.3 Counter Overflow Package

This package defines the modulus value attribute which is used when an observed counter overflows and counter differences are to be calculated. The package contains an attribute which specifies the value to be used when the modulus of the difference between counter values is required on counter overflow.

**Counter Overflow Attributes**

The counter overflow package contains the following attribute:

counterModulus

This attribute holds the value to be used as the modulus value when an observed counter overflows.

**Counter Overflow Behaviour**

See clause B.4 for detailed behaviour definition.

## B.3.3 Use of Quality Of Service (QOS) Alarm Notification

Parameters corresponding to Alarm information in the Alarm Reporting Service (See ISO/IEC 10164-4) and their semantics are presented below. These parameters shall be present in the notification unless otherwise stated.

| | |
|---|---|
| Alarm type: | Quality of service |
| Probable cause: | Threshold crossed |
| Perceived severity: | The values related to the severe and early warning thresholds are defined on a managed object instance basis. The value "Cleared" indicates crossing either of the two values associated with the severe clear and early warning clear. The values related to additional threshold levels are also to be defined on a managed object instance basis. |



Copyright International Organization for Standardization
Provided by IHS under license with ISO
No reproduction or networking permitted without license from IHS Not for Resale

| | |
|---|---|
| Threshold information: | The threshold information is used for the estimate of the mean threshold. |
| Monitored attributes: | Attribute identifiers and values of the observed managed object instance and the observed attribute identifier. Other attributes of the metric may also be included in this parameter. |
| State change: | Optionally used to indicate an operational state change has occurred associated with the alarm reported. |

## B.4 Common Managed Objects

In this clause the following Managed Objects are defined:

the Resource TypeId managed object;
the Scanner managed object;
the Exponentially Weighted Moving Average Metric Monitor managed object.

The Parameters, Name Bindings, Packages, Attributes and Behaviours are defined together with the Managed Object.

NOTE — In IEEE 802.1F all the names of the Managed Objects, Packages, Behaviours, Attributes, Name Bindings and Parameters starts with o, p, b, a, nb and p respectively.

In IEEE 802.1F/D13 the Standards name "ISO/IEC 10165-2" is used for DMI.

The allocation of Object Identifiers are taken from IEEE 802.1F

### B.4.1 The ResourceTypeId managed object

```
-- The resourceTypeId managed object class can be used within IEEE 802 LAN/MAN resources to
-- identify information about the managed system. This managed object can be used to identify
-- any resource within a LAN/MAN system. The information is provided by the manufacturer,
-- however, and is read-only. Support of the resourceTypeId managed object is strongly recommended.

resourceTypeId MANAGED OBJECT CLASS
DERIVED FROM "DMI":top;
CHARACTERIZED BY resourceTypeId-P PACKAGE
  ATTRIBUTES
    resourceTypeIdName GET,
    resourceInfo GET;;;
REGISTERED AS {IEEE802CommonDefinitions.partf managedObjectClass(3) resourcetypeid(0)};

-- Name Bindings

resourceTypeId-ILCDLE-Automatic NAME BINDING
SUBORDINATE OBJECT CLASS resourceTypeId AND SUBCLASSES;
NAMED BY
SUPERIOR OBJECT CLASS ILCDLE AND SUBCLASSES;
WITH ATTRIBUTE resourceTypeIdName;
BEHAVIOUR resourceTypeId-ILCDLE-Automatic-B BEHAVIOUR
  DEFINED AS
    The name binding which applies when a resourceTypeId managed object (or
    an instance of a subclass of the resourceTypeId class) is created automatically
    by the operation of the system as a subordinate object of an ILCDLE
    managed object (or subclass), and deleted automatically.;;
REGISTERED AS {DLM.nboi resourceTypeId-ILCDLE-Automatic(11)};

resourceTypeId-mACDLE-Automatic NAME BINDING
SUBORDINATE OBJECT CLASS resourceTypeId AND SUBCLASSES;
NAMED BY
```



Copyright International Organization for Standardization
Provided by IHS under license with ISO
No reproduction or networking permitted without license from IHS Not for Resale

```
SUPERIOR OBJECT CLASS mACDLE AND SUBCLASSES;
WITH ATTRIBUTE resourceTypeIdName;
BEHAVIOUR resourceTypeId-mACDLE-Automatic-B BEHAVIOUR
  DEFINED AS
     The name binding which applies when a resourceTypeId managed object (or
     an instance of a subclass of the resourceTypeId class) is created automatically
     by the operation of the system as a subordinate object of a mACDLE
     managed object (or subclass), and deleted automatically.;;
REGISTERED AS {DLM.nboi resourceTypeId-mACDLE-Automatic(12)};

-- Note: In EEEEI 802.1F there is only one Name Binding,
-- REGISTERED AS {IEEE802CommonDefinitions.partf nameBinding(6) resourcetypeid-system(0)}.

--Attributes

resourceTypeIdName ATTRIBUTE
WITH ATTRIBUTE SYNTAX IEEE802CommonDefinitions.ResourceTypeIdName;
MATCHES FOR EQUALITY;
BEHAVIOUR resourceTypeIdName-B BEHAVIOUR
  DEFINED AS
     Contains the name of the resourceTypeId managed object.
     The attribute is read-only and always contains the value "RTID".
     This attribute shall not be used as a naming attribute for any other managed object class.;;
REGISTERED AS {IEEE802CommonDefinitions.partf attribute(7)  restypeidname(1)};

resourceInfo ATTRIBUTE
WITH ATTRIBUTE SYNTAX IEEE802CommonDefinitions.ResourceInfo;
MATCHES FOR EQUALITY;
BEHAVIOUR resourceInfo-B BEHAVIOUR
  DEFINED AS
     Manufacturer-supplied info describing the resource.
     A structured attribute that specifies:

     ManufacturerOUI. This takes the value of a valid instance of the organisationally unique
     identifier described in section 5.1 of IEEE 802.1 Overview and Architecture.

     ManufacturerName. This identifies the manufacturer of the resource. Global assignment of
     unique strings is outside the scope of this standard.

     ManufacturerProductName. This is the manufacturer-defined product name.

     ManufacturerProductVersion. This is the manufacturer-defined product revision
     designation.;;
REGISTERED AS {IEEE802CommonDefinitions.partf attribute(7) resourceinfo(2)};
```

## B.4.2 The Scanner managed object

```
-- The scanner managed object class is a superclass from which the eWMAMetricMonitor
-- managed object class is derived. It defines facilities for periodically sampling the value of a
-- specified attribute within a specified object. The scanner managed object class is never
-- instantiated.

scanner MANAGED OBJECT CLASS
DERIVED FROM "DMI":top;
CHARACTERIZED BY scanner-P PACKAGE
   BEHAVIOUR scanner-P-B BEHAVIOUR
      DEFINED AS  See "scanner Behaviour".in clause B.3.1.2.;;
   ATTRIBUTES
      "DMI":administrativeState GET-REPLACE,
      "DMI":operationalState GET,
      granularityPeriod GET-REPLACE,
      scannerId GET;;;
```



Copyright International Organization for Standardization
Provided by IHS under license with ISO
No reproduction or networking permitted without license from IHS Not for Resale

```
CONDITIONAL PACKAGES
   configurationEventsReporting-P PRESENT IF configuration event reporting is supported.;
REGISTERED AS { IEEE802CommonDefinitions.partf managedObjectClass(3) scanner(1) };

-- Packages

configurationEventsReporting-P PACKAGE
BEHAVIOUR configurationEventsReporting-P-B BEHAVIOUR
   DEFINED AS  See ,clause B.6.2.2."Configuration Events Reporting Package".;;
NOTIFICATIONS
   "DMI":attributeValueChange,
   "DMI":objectCreation,
   "DMI":objectDeletion,
   "DMI":stateChange;
REGISTERED AS {IEEE802CommonDefinitions.partf package(4) configchangereport(1) };

-- Attributes

granularityPeriod ATTRIBUTE
WITH ATTRIBUTE SYNTAX IEEE802CommonDefinitions.TimePeriod;
MATCHES FOR EQUALITY, ORDERING;
REGISTERED AS {IEEE802CommonDefinitions.partf attribute(7) granularityperiod(8) };

scannerId ATTRIBUTE
WITH ATTRIBUTE SYNTAX IEEE802CommonDefinitions.ScannerId;
MATCHES FOR  EQUALITY ;
REGISTERED AS {IEEE802CommonDefinitions.partf attribute(7) scannerid(3) };
```

### B.4.3 The Exponentially Weighted Moving Average Metric Monitor managed object

```
-- The eWMAMetricMonitor managed object class is defined as a subclass of the scanner
-- managed object class. Support of the eWMAMetricMonitor managed object is optional.

eWMAMetricMonitor MANAGED OBJECT CLASS
DERIVED FROM scanner;
CHARACTERIZED BY eWMAMetricMonitor-P PACKAGE
   BEHAVIOUR eWMAMetricMonitor-P-B;
   ATTRIBUTES
      derivedGauge GET-REPLACE derivedGaugeNotCurrent,
      estimateOfMean GET-REPLACE,
      movingTimePeriod GET-REPLACE,
      observedAttributeId GET-REPLACE,
      observedManagedObjectInstance GET-REPLACE,
      severityIndicatingThreshold GET-REPLACE ADD-REMOVE;
   NOTIFICATIONS
      "DMI":qualityofServiceAlarm;;;
CONDITIONAL PACKAGES
   counterDifference-P PRESENT IF "counter to gauge conversion is requested",
   counterOverflow-P PRESENT IF "the counterDifference-P package is present and modulo
      arithmetic is required to calculate the new value of the derived gauge on counter overflow";
REGISTERED AS {IEEE802CommonDefinitions.partf managedObjectClass(3) ewmametricmonitor(2) };

-- Packages

counterDifference-P PACKAGE
BEHAVIOUR counterDifference-P-B;
ATTRIBUTES
   counterTMinusGP GET-REPLACE;
REGISTERED AS {IEEE802CommonDefinitions.partf package(4) counterdifference(0) };

counterOverflow-P PACKAGE
BEHAVIOUR counterOverflow-P-B;
```



Copyright International Organization for Standardization
Provided by IHS under license with ISO
No reproduction or networking permitted without license from IHS Not for Resale

ATTRIBUTES
counterModulus GET-REPLACE;
REGISTERED AS {IEEE802CommonDefinitions.partf package(4) countermodulus(2) };

**-- Behaviours**

eWMAMetricMonitor-P-B BEHAVIOUR
DEFINED AS

See "EWMA Metric Monitor Behaviour" in clause B.3.1.3. for general behaviour of this object. The detailed smoothing algorithm for estimateOfMean is as follows:

The estimate of the mean (estimateOfMean), ~V(t), is defined to be a weighted moving average of a gauge, V[t]. The specified weighting is exponential. The algorithm has the property that more recent event occurrences in the moving time period are "weighted" more heavily than older occurrences. The exponentially weighted moving average (EWMA) is defined by the following recursive algorithm.

$$\sim V[t] = \sim V[t - GP] + GP * ( V[t] - \sim V[t - GP] ) / T1$$

where

t is the current value of time,

V[t] is the value of the gauge (derivedGauge) at time t,

~V[t] is the estimate of the mean (estimateOfMean) of the gauge V[t] at time t,

~V[t - GP] is the estimate of the mean of the gauge V[t] at time (t -GP), the last estimate of the mean,

GP is the time between the last observation of V[t] and the current observation constrained to be a positive value larger than zero (granularityPeriod). It is sufficient to have a best effort to make GP a constant value.

T1 is the time constant of the exponentially weighted moving average with the same units as GP. T1 is defined by the equation T1 = (MTP + GP)/2.

MTP is the moving time period (movingTimePeriod) over which the mean is estimated.

MTP must be greater than or equal to GP. Therefore the value of T1 is greater than or equal to GP.

When GP = MTP the calculated mean value for the gauge becomes the current gauge value, i.e. ~V[t] = V[t].

Both GP and MTP can be reset by the managing system. The mean time period, T1, can be chosen to be integer multiples of the granularity period, GP.

The initial condition (or reset condition) of the EWMA of the estimated mean is provided by setting the estimateOfMean attribute.

The units of ~V[t] are the same as the units of the gauge to which the estimate of the mean is applied. ;

counterDifference-P-B BEHAVIOUR
DEFINED AS

$$V[t] = [counter[t] - counter[t-GP]]$$

where



Copyright International Organization for Standardization
Provided by IHS under license with ISO
No reproduction or networking permitted without license from IHS Not for Resale

V[t] is the difference between successive observations of the counter,

counter[t] is the value of the counter at the current time t (not saved in any attribute),

counter[t-GP] is the previous value of the counter at time t-GP (i.e., counterTMinusGP),

GP is the sampling interval in units of time (Granularity Period),

*The initial value of counter[t-GP] determines the initial difference value.*

Whenever the metric object transitions from locked to unlocked status, the first scan is treated in a special manner.

On first scan
counter[t-GP] <- observed counter
derivedGauge <- unspecified, if retrieved returns error parameter
pDerivedGaugeNotCurrent
estimateOfMean <- either as initialized or value when last locked

On second and subsequent scans
read observed counter
derivedGauge <- observed counter - counter[t-GP]
counter[t-GP] <- observed counter
estimate of mean <- results of EWMA summarization function;

severityIndicatingThreshold-B BEHAVIOUR
DEFINED AS

This attribute type has all the behaviour of a gauge-threshold attribute type, as defined in clause 8.4.2 of ISO/IEC 10165-2. As an enhancement to the syntax of the gauge-Threshold attribute type it adds an optional severityIndication parameter to the syntax of both the notifyHigh and notifyLow submembers within each threshold level member. This attribute type has additional behaviour associated with these optional perceivedSeverity indication parameters, which is defined as follows:

- If the notify-high's switch is on, the notify-high's severityIndication value shall be reported in the perceivedSeverity parameter of any notification triggered by the gauge value crossing the notify-high's gaugeThreshold value in the positive going direction.

- If the notify-low's switch is on, the notify-low's severityIndication value shall be reported in the perceivedSeverity parameter of any notification triggered by the gauge value crossing the notify-low's gaugeThreshold value in the negative going direction.

If both switches are on for a single thresholdLevel, one of the severityIndication values shall be "clear".;

counterOverflow-P-B BEHAVIOUR
DEFINED AS

The gauge value derived (V[t]) is calculated using the following method:

If [counter[t] - counter[t-GP]] is positive

V[t] is evaluated as defined in bCounterDifference behaviour

If [counter[t] - counter[t-GP]] is negative

V[t] = [counter[t] - counter[t-GP] + modulus value].

If the value of the modulus value attribute is zero the actual modulus value used to evaluate V[t] is a local matter.;

**– Name Bindings**



Copyright International Organization for Standardization
Provided by IHS under license with ISO
No reproduction or networking permitted without license from IHS Not for Resale

```
eWMAMetricMonitor-ILCDLE-Management NAME BINDING
SUBORDINATE OBJECT CLASS eWMAMetricMonitor AND SUBCLASSES;
NAMED BY
SUPERIOR OBJECT CLASS ILCDLE AND SUBCLASSES;
WITH ATTRIBUTE scannerId;
BEHAVIOUR eWMAMetricMonitor-ILCDLE-Management-B BEHAVIOUR
   DEFINED AS  See "scanner Behaviour" in clause B.3.1.2 and "eWMAMetricMonitor Behaviour" in
     clause B.3.1.3 ;;
CREATE
 WITH-REFERENCE-OBJECT,
 WITH-AUTOMATIC-INSTANCE-NAMING;
DELETE  ONLY-IF-NO-CONTAINED-OBJECTS;
REGISTERED AS {DLM.nboi eWMAMetricMonitor-ILLCDLE-Management(13)};

eWMAMetricMonitor-mACDLE-Management NAME BINDING
SUBORDINATE OBJECT CLASS eWMAMetricMonitor AND SUBCLASSES;
NAMED BY
SUPERIOR OBJECT CLASS mACDLE AND SUBCLASSES;
WITH ATTRIBUTE scannerId;
BEHAVIOUR eWMAMetricMonitor-mACDLE-Management-B BEHAVIOUR
   DEFINED AS  See "scanner Behaviour" in clause B.3.1.2 and "eWMAMetricMonitor Behaviour" in
         clause B.3.1.3;;
CREATE
 WITH-REFERENCE-OBJECT,
 WITH-AUTOMATIC-INSTANCE-NAMING;
DELETE
 ONLY-IF-NO-CONTAINED-OBJECTS;
REGISTERED AS {DLM.nboi eWMAMetricMonitor-mACDLE-Management(14)};

-- Note: In IEEEE 802.1F there is only one Name Binding,
-- REGISTERED AS {IEEE802CommonDefinitions.partf nameBinding(6) ewmametricmonitor-system(1)}.

-- Attributes

counterTMinusGP ATTRIBUTE
DERIVED FROM "GMI":nonWrapping64BitCounter;
REGISTERED AS {IEEE802CommonDefinitions.partf attribute(7) countertminusgp(4) };

-- Note: In IEEE 802.1F "DERIVED FROM" refers to "DMI: counter" instead.

counterModulus ATTRIBUTE
DERIVED FROM "GMI":nonWrapping64BitCounter;
REGISTERED AS {IEEE802CommonDefinitions.partf attribute(7) countermodulus(5) };

-- Note: In IEEE 802.1F "DERIVED FROM" refers to "DMI: counter" instead.

derivedGauge ATTRIBUTE
DERIVED FROM "DMI":gauge;
REGISTERED AS {IEEE802CommonDefinitions.partf attribute(7) derivedGauge(6) };

estimateOfMean ATTRIBUTE
DERIVED FROM "DMI":gauge;
REGISTERED AS {IEEE802CommonDefinitions.partf attribute(7) estimateofmean(7) };

observedAttributeId ATTRIBUTE
WITH ATTRIBUTE SYNTAX DLM.AttributeId;
MATCHES FOR EQUALITY;
REGISTERED AS {IEEE802CommonDefinitions.partf attribute(7) observedattributeid(9) };

-- Note: In IEEE 802.1F "WITH ATTRIBUTE SYNTAX" refers to "ISO/IEC 9596-1:1991,CMIP" instead.

observedManagedObjectInstance ATTRIBUTE
```



Copyright International Organization for Standardization
Provided by IHS under license with ISO
No reproduction or networking permitted without license from IHS Not for Resale

```
WITH ATTRIBUTE SYNTAX DLM.ObjectInstance;
REGISTERED AS {IEEE802CommonDefinitions.partf attribute(7) observedmanagedobjectinstance(10) };

-- Note: In IEEE 802.1F "WITH ATTRIBUTE SYNTAX" refers to "ISO/IEC 9596-1:1991,CMIP" instead.

severityIndicatingThreshold ATTRIBUTE
WITH ATTRIBUTE SYNTAX IEEE802CommonDefinitions.SeverityIndGaugeThreshold ;
MATCHES FOR EQUALITY ;
BEHAVIOUR severityIndicatingThreshold-B;
REGISTERED AS {IEEE802CommonDefinitions.partf attribute(7) severityindicatingthreshold(11) };

movingTimePeriod ATTRIBUTE
WITH ATTRIBUTE SYNTAX IEEE802CommonDefinitions.TimePeriod;
MATCHES FOR EQUALITY, ORDERING;
REGISTERED AS {IEEE802CommonDefinitions.partf attribute(7) movingtimeperiod(12) };

-- Parameters

derivedGaugeNotCurrent PARAMETER
CONTEXT SPECIFIC-ERROR;
WITH SYNTAX IEEE802CommonDefinitions.DerivedGaugeNotCurrentType;
BEHAVIOUR derivedGaugeNotCurrent-B BEHAVIOUR
   DEFINED AS
     Derived gauge set to an inconsistent value.  May occur during the first scan interval after
     transitioning to the unlocked state or when the counter difference derives a negative value.
     The syntax of the parameter permits the recipient of the operation to return the values of all
     attributes referenced by the Set operation.;;
REGISTERED AS {IEEE802CommonDefinitions.partf parameter(5) derivedgaugenotcurrent(0) };
```

## B.5 ASN.1 Module

```
IEEE802CommonDefinitions
{ iso(1) member-body(2) us(840) ieee802dot1partf(10011) asn1Module(2) commondefinitions(0) version1(0)}
DEFINITIONS IMPLICIT TAGS ::=
BEGIN
IMPORTS SetInfoStatus,AttributeId FROM CMIP-1 {joint-iso-itu ms(9) cmip(1) modules(0) protocol(3)}
                GroupObjects, ObservedValue,PerceivedSeverity FROM
Attribute-ASN1Module {joint-iso-itu ms(9) smi(3) part2(2) asn1Module(2) 1};

-- Note: In this standard, the identifier joint-iso-itu is used as a synonym for the identifier joint-iso-ccitt and has
-- the same value (2), defined in ISO/IEC 8824.

-- EXPORTS everything

-- Note: This clause includes ASN.1 definitions specific to Annex B.

DerivedGaugeNotCurrentType ::= SEQUENCE {
   currentTime    [5] IMPLICIT GeneralizedTime OPTIONAL,
   setInfoList    [6] IMPLICIT SET OF SetInfoStatus }

ManufacturerOUI ::= OCTET STRING

-- ManufacturerOUI takes the value of an Organisationally Unique Identifier, as defined in
-- section 5.1 of IEEE 802.1 Overview and Architecture.  When encoded as an
-- OCTET STRING, the encoding of the value field of the OCTET STRING shall comply with
-- the representation defined in section 5.1.2 of the Overview and Architecture.  Inasmuch as
-- multiple OUI assignments are possible for a given manufacturer and no public registry of
-- such assignments exists, methods for application of the OUI as a globally unique
-- manufacturer identifier is outside the scope of this standard.

ManufacturerName ::= PrintableString
```



Copyright International Organization for Standardization
Provided by IHS under license with ISO
No reproduction or networking permitted without license from IHS Not for Resale

```
-- ManufacturerName is a printable string used to identify the manufacturer of the resource.
-- Global assignment of unique name strings is outside the scope of this standard. Maximum
-- string length is 128 octets.

ManufacturerProductName ::= PrintableString

-- ManufacturerProductName is a printable string used to identify the manufacturer's product
-- name of the resource. Maximum string length is 128 octets.

ManufacturerProductVersion ::= PrintableString

-- ManufacturerProductVersion is a printable string used to identify the manufacturer's product
-- version of the resource. Maximum string length is 128 octets.

partf OBJECT IDENTIFIER ::= {iso(1) member-body(2) US(840) ieee802dot1partf(10011)}

ResourceInfo ::= SEQUENCE {
   manufacturerOUI          [0] ManufacturerOUI OPTIONAL,
   manufacturerName         [1] ManufacturerName OPTIONAL,
   manufacturerProductName  [2] ManufacturerProductName OPTIONAL,
   manufacturerProductVersion [3] ManufacturerProductVersion OPTIONAL}

-- ResourceInfo provides a means of indicating, in data readable from a managed object,
-- information that identifies the source of the implementation.

ResourceTypeIdName ::= GraphicString
-- the only value allowed is "RTID"}

ScannerId ::= GraphicString

SeverityIndGaugeThreshold ::= SET OF SEQUENCE {
    severityIndNotifyLow SeverityIndThreshold,
    severityIndNotifyHigh SeverityIndThreshold}

SeverityIndThreshold ::= SEQUENCE {
    threshold           ObservedValue,
    notifyonoff         BOOLEAN,
    severityIndication  PerceivedSeverity OPTIONAL
                        -- shall be present if notifyonoff is TRUE
                        }

-- A range of time period units from picoseconds to days. No implication is to be inferred as to the
-- degree of resolution required within the implementation of a attribute which is to be
-- represented as a time period. Likewise no restriction is imposed on the method (i.e. time period
-- units) by which time period is represented within the implementation of a managed object.
-- Implementations are not required to support all time period values.

TimePeriod ::= CHOICE {
  days        [0] IMPLICIT INTEGER,
  hours       [1] IMPLICIT INTEGER,
  minutes     [2] IMPLICIT INTEGER,
  seconds     [3] IMPLICIT INTEGER,
  milliSecs   [4] IMPLICIT INTEGER,
  microSecs   [5] IMPLICIT INTEGER,
  nanoSecs    [6] IMPLICIT INTEGER,
  picoSecs    [7] IMPLICIT INTEGER}

END
```



--`,,`--`,,`,,`,`,,`---

Copyright International Organization for Standardization
Provided by IHS under license with ISO
No reproduction or networking permitted without license from IHS Not for Resale

# Annex C
(informative)

# Shorthand Description of Managed Objects

The information in this annex is intended only to give a broad outline of the Data Link Layer Management Specification. While the information contained herein has been derived from the normative GDMO text in the body of this Specification, it should be treated with caution, as there may be errors.

The following abbreviations are used to describe the property list of attributes.

| | |
|---|---|
| G | Get |
| R | Replace |
| RWD | Replace With Default |
| A | Add |
| RM | Remove |

The following abbreviations are used for external label references.

| | |
|---|---|
| DMI: | "CCITT Rec. X.721 (1992) \| ISO/IEC 10165-2 : 1992": |
| GMI: | "CCITT Rec. X.723 \| ISO/IEC 10165-5": |

Template types with a "*" suffix (for example ATTRIBUTE*) refer to template types defined in conditional packages. All inherited templates, except those inherited from "top", are included in each Managed Object Class.



Copyright International Organization for Standardization
Provided by IHS under license with ISO
No reproduction or networking permitted without license from IHS Not for Resale

The inheritance hierarchy is illustrated below.

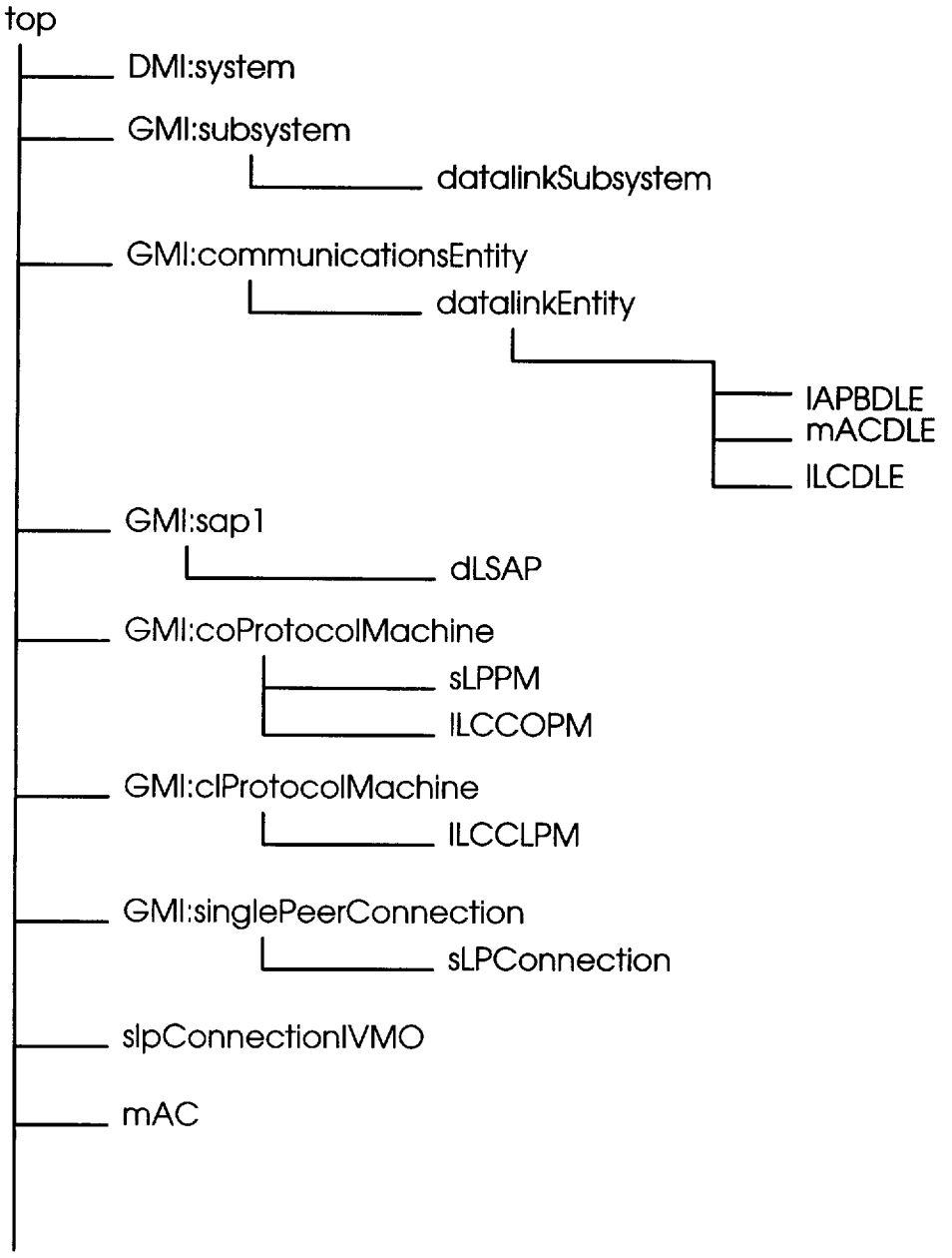


**Figure C.1 - Datalink Layer Inheritance Hierarchy**



Copyright International Organization for Standardization
Provided by IHS under license with ISO
No reproduction or networking permitted without license from IHS
Not for Resale

MANAGED OBJECT CLASS ILCCOPM DERIVED FROM (GMI:coProtocolMachine) CONTAINED IN (ILCDLE)
DMI:objectCreation NOTIFICATION
DMI:objectDeletion NOTIFICATION
DMI:stateChange NOTIFICATION
GMI:activate ACTION
GMI:deactivate ACTION
END MANAGED OBJECT CLASS ILCCOPM

MANAGED OBJECT CLASS ILCCLPM DERIVED FROM (GMI:clProtocolMachine) CONTAINED IN (ILCDLE)
DMI:objectCreation NOTIFICATION
DMI:objectDeletion NOTIFICATION
DMI:stateChange NOTIFICATION
GMI:activate ACTION
GMI:deactivate ACTION
END MANAGED OBJECT CLASS ILCCLPM

MANAGED OBJECT CLASS ILCDLE DERIVED FROM (datalinkEntity) CONTAINED IN (datalinkSubsystem)
DMI:objectCreation NOTIFICATION
DMI:objectDeletion NOTIFICATION
DMI:stateChange NOTIFICATION
providerEntityNames ATTRIBUTE (G, R, RWD)
The distinguished names of provider entity managed objects.
END MANAGED OBJECT CLASS ILCDLE

MANAGED OBJECT CLASS mAC DERIVED FROM (DMI:top) CONTAINED IN (mACDLE)
DMI:objectCreation NOTIFICATION
DMI:objectDeletion NOTIFICATION
DMI:operationalState ATTRIBUTE (G)
DMI:stateChange NOTIFICATION
GMI:activate ACTION
GMI:deactivate ACTION
mACId ATTRIBUTE (G)
The naming attribute for the mAC MO.
END MANAGED OBJECT CLASS mAC

MANAGED OBJECT CLASS mACDLE DERIVED FROM (datalinkEntity) CONTAINED IN (datalinkSubsystem)
DMI:objectCreation NOTIFICATION
DMI:objectDeletion NOTIFICATION
DMI:stateChange NOTIFICATION
providerEntityNames ATTRIBUTE (G, R, RWD)
The distinguished names of provider entity managed objects.
END MANAGED OBJECT CLASS mACDLE

MANAGED OBJECT CLASS sLPConnectionIVMO DERIVED FROM (DMI:top) CONTAINED IN (sLPPM)
DMI:objectCreation NOTIFICATION
DMI:objectDeletion NOTIFICATION
interfaceType ATTRIBUTE (G, R, RWD)
Determines the address mode used by the local DTE.
k ATTRIBUTE (G, R, RWD)
Value of the ISO 7776 parameter k.
n1 ATTRIBUTE (G, R, RWD)
Value of the ISO 7776 parameter N1.
n2 ATTRIBUTE (G, R, RWD)
Value of the ISO 7776 parameter N2.
sLPConnectionIVMOId ATTRIBUTE (G)
Naming attribute for the sLPConnectionIVMO managed object.
sequenceModulus ATTRIBUTE (G, R, RWD)
Determines basic (modulo 8) or extended (modulo 128) operation.
t1Timer ATTRIBUTE (G, R, RWD)
Value of the ISO 7776 parameter Timer T1.
t2Timer ATTRIBUTE (G, R, RWD)
Value of the ISO 7776 parameter T2.
t3Timer ATTRIBUTE* (G, R, RWD)



Copyright International Organization for Standardization
Provided by IHS under license with ISO
No reproduction or networking permitted without license from IHS Not for Resale

Value of the ISO 7776 optional parameter T3.
t4Timer ATTRIBUTE (G, R, RWD)
Value of the ISO 7776 parameter T4.
END MANAGED OBJECT CLASS sLPConnectionIVMO

MANAGED OBJECT CLASS sLPConnection DERIVED FROM (GMI:singlePeerConnection) CONTAINED IN (sLPPM)
DMI:communicationsAlarm NOTIFICATION
DMI:objectCreation NOTIFICATION
DMI:objectDeletion NOTIFICATION
GMI:deactivate ACTION
fCSErrorsReceived ATTRIBUTE (G)
Counter. Total number of frames received with a bad frame check.
fRMRsReceived ATTRIBUTE (G)
Counter. Total number of FRMR frames received.
fRMRsSent ATTRIBUTE (G)
Counter. Total number of FRMR frames sent.
iFrameDataOctetsReceived ATTRIBUTE (G)
Counter. Total number of data octets received in I frames.
iFrameDataOctetsSent ATTRIBUTE (G)
Counter. Total number of data octets sent in I frames.
iFramesReceived ATTRIBUTE (G)
Counter. Total number of I frames received.
iFramesSent ATTRIBUTE (G)
Counter. Total number of I frames sent.
interfaceType ATTRIBUTE (G, R, RWD)
Determines the address mode used by the local DTE.
k ATTRIBUTE (G, R, RWD)
Value of the ISO 7776 parameter k.
n1 ATTRIBUTE (G, R, RWD)
Value of the ISO 7776 parameter N1.
n2 ATTRIBUTE (G, R, RWD)
Value of the ISO 7776 parameter N2.
pollsReceived ATTRIBUTE (G)
Counter. Total number of command frames received with P-bit set.
rEJsReceived ATTRIBUTE (G)
Counter. Total number of REJ frames received.
rEJsSent ATTRIBUTE (G)
Counter. Total number of REJ frames sent.
rNRsReceived ATTRIBUTE (G)
Counter. Total number of RNR frames received.
rNRsSent ATTRIBUTE (G)
Counter. Total number of RNR frames sent.
sABMsReceived ATTRIBUTE (G)
Counter. Total number of SABM frames received.
sABMsSent ATTRIBUTE (G)
Counter. Total number of SABM frames sent.
sLPProtocolState ATTRIBUTE (G)
Local state of a LAPB (SLP) connection.
sequenceModulus ATTRIBUTE (G, R, RWD)
Determines basic (modulo 8) or extended (modulo 128) operation.
t1Timer ATTRIBUTE (G, R, RWD)
Value of the ISO 7776 parameter Timer T1.
t2Timer ATTRIBUTE (G, R, RWD)
Value of the ISO 7776 parameter T2.
t3Timer ATTRIBUTE* (G, R, RWD)
Value of the ISO 7776 optional parameter T3.
t4Timer ATTRIBUTE (G, R, RWD)
Value of the ISO 7776 parameter T4.
timesT1Expired ATTRIBUTE (G)
Counter. Total number of times the local Timer T1 expired.
timesT3Expired ATTRIBUTE* (G)
Counter. Total number of times local Timer T3 expired.



Copyright International Organization for Standardization
Provided by IHS under license with ISO
No reproduction or networking permitted without license from IHS Not for Resale

END MANAGED OBJECT CLASS sLPConnection

MANAGED OBJECT CLASS sLPPM DERIVED FROM (GMI:coProtocolMachine) CONTAINED IN (IAPBDLE)
DMI:objectCreation NOTIFICATION
DMI:objectDeletion NOTIFICATION
DMI:stateChange NOTIFICATION
GMI:activate ACTION
GMI:deactivate ACTION
END MANAGED OBJECT CLASS sLPPM

MANAGED OBJECT CLASS IAPBDLE DERIVED FROM (datalinkEntity) CONTAINED IN (datalinkSubsystem)
DMI:objectCreation NOTIFICATION
DMI:objectDeletion NOTIFICATION
DMI:stateChange NOTIFICATION
mT1Timer ATTRIBUTE* (G, R, RWD)
Value of the ISO 7776 parameter MT1 (lost frame timer).
mT2Timer ATTRIBUTE* (G, R, RWD)
Value of the ISO 7776 parameter MT2 (group busy timer).
mT3Timer ATTRIBUTE* (G, R, RWD)
Value of the ISO 7776 parameter MT3 (mlp reset confirmation timer).
providerEntityNames ATTRIBUTE (G, R, RWD)
The distinguished names of provider entity managed objects.
END MANAGED OBJECT CLASS x25DLE

MANAGED OBJECT CLASS dLSAP DERIVED FROM (GMI:sap1) CONTAINED IN (datalinkEntity)
END MANAGED OBJECT CLASS dLSAP

MANAGED OBJECT CLASS datalinkEntity DERIVED FROM (GMI:communicationsEntity) CONTAINED IN (datalinkSubsystem)
DMI:objectCreation NOTIFICATION
DMI:objectDeletion NOTIFICATION
DMI:stateChange NOTIFICATION
providerEntityNames ATTRIBUTE (G, R, RWD)
The distinguished names of provider entity managed objects.
END MANAGED OBJECT CLASS datalinkEntity

MANAGED OBJECT CLASS datalinkSubsystem DERIVED FROM (GMI:subsystem)
GMI:subsystemId ATTRIBUTE (G)
END MANAGED OBJECT CLASS datalinkSubsystem



Copyright International Organization for Standardization
Provided by IHS under license with ISO
No reproduction or networking permitted without license from IHS Not for Resale

# Annex D
(informative)

# Examples of the use of Relationship Attributes

This annex provides examples of the use of relationship attributes, both within the data link layer and also between the data link layer and its adjoining layers. These examples are not intended to be exhaustive. Relationships for other protocol combinations may be constructed in a similar manner, and a particular implementation may be capable of supporting multiple protocols simulteaneously. For example, network protocol operation over X.25 and LAN. Such possibilities have only been omitted for reasons of clarity.

Note that some relationships are implied by containment, and therefore no explicit relationship attributes are required.

The examples are as follows.

- Figure D.1 - CONS over LAPB (SLP)
- Figure D.2 - CLNS over LLCCL over CSMA/CD
- Figure D.3 - CONS over LLCCO over CSMA/CD



Copyright International Organization for Standardization
Provided by IHS under license with ISO
No reproduction or networking permitted without license from IHS
Not for Resale

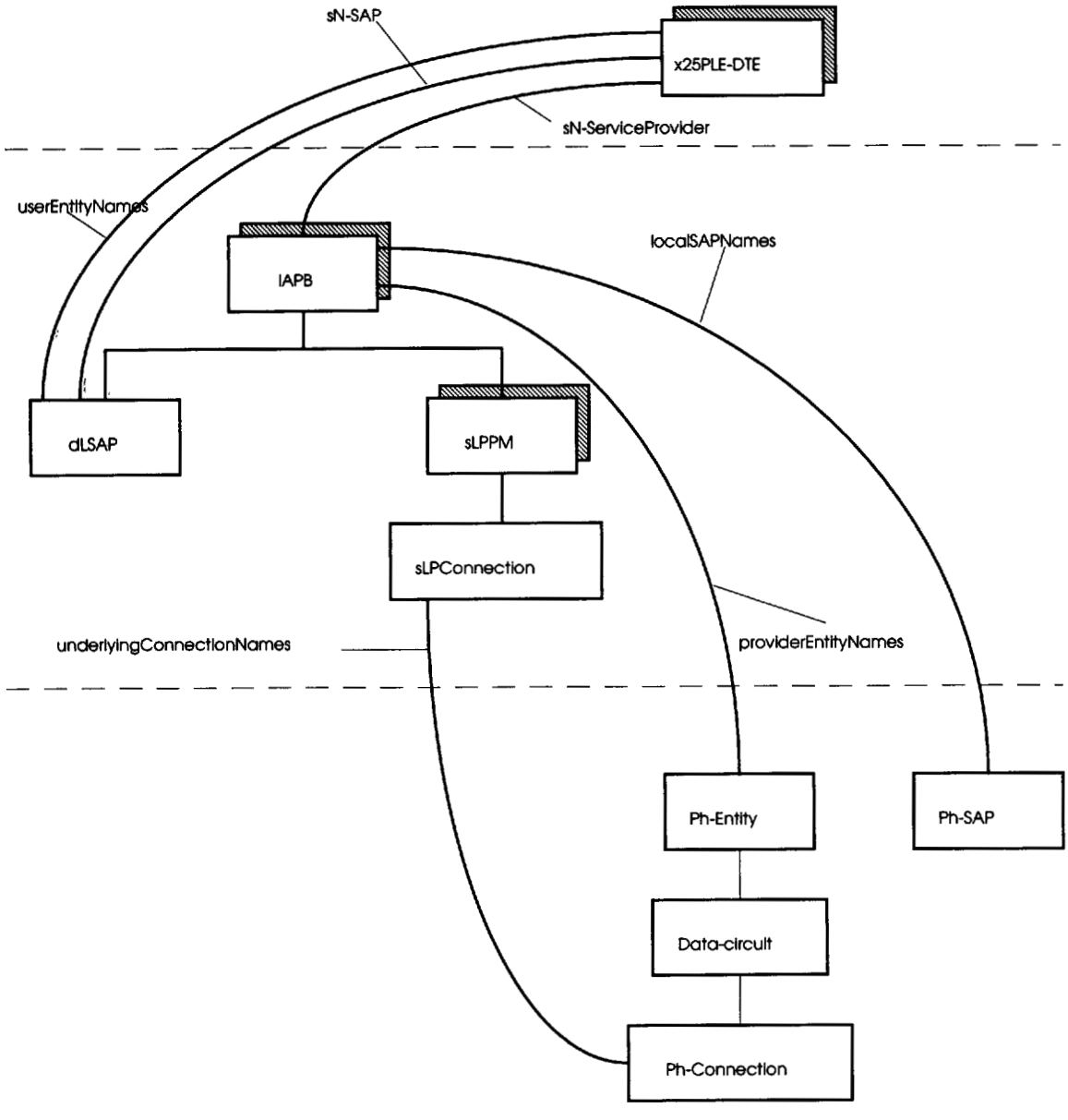


**Figure D.1 - CONS over LAPB (SLP)**



Copyright International Organization for Standardization
Provided by IHS under license with ISO
No reproduction or networking permitted without license from IHS

Not for Resale

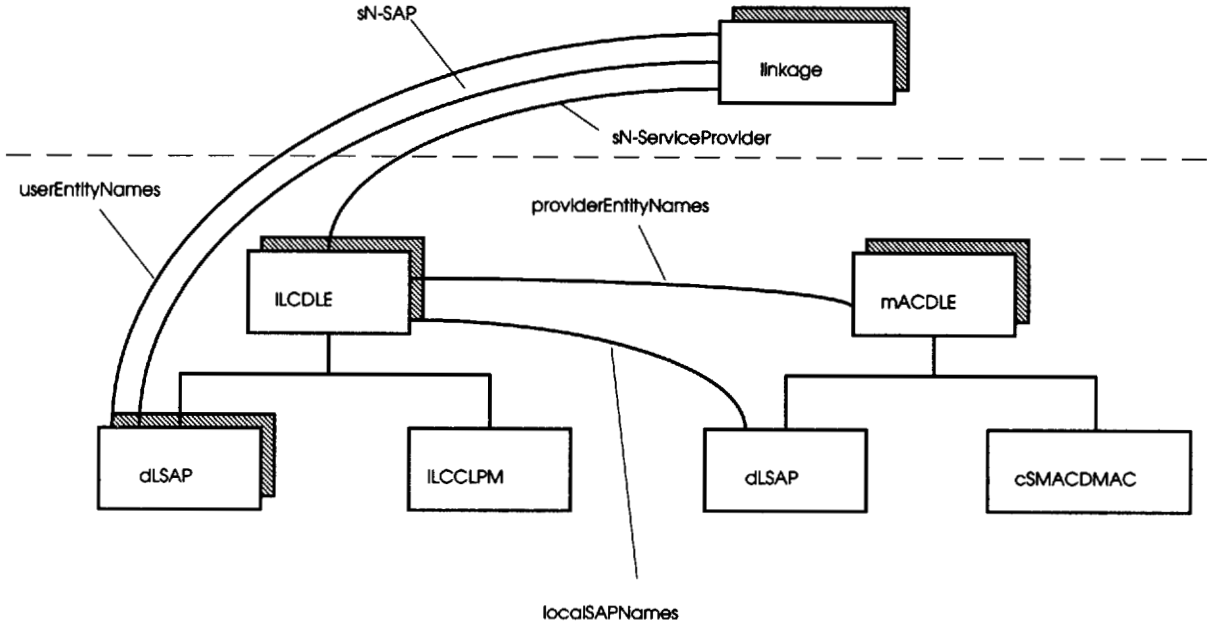


**Figure D.2 - CLNS over LLCCL over CSMA/CD**



Copyright International Organization for Standardization
Provided by IHS under license with ISO
No reproduction or networking permitted without license from IHS Not for Resale

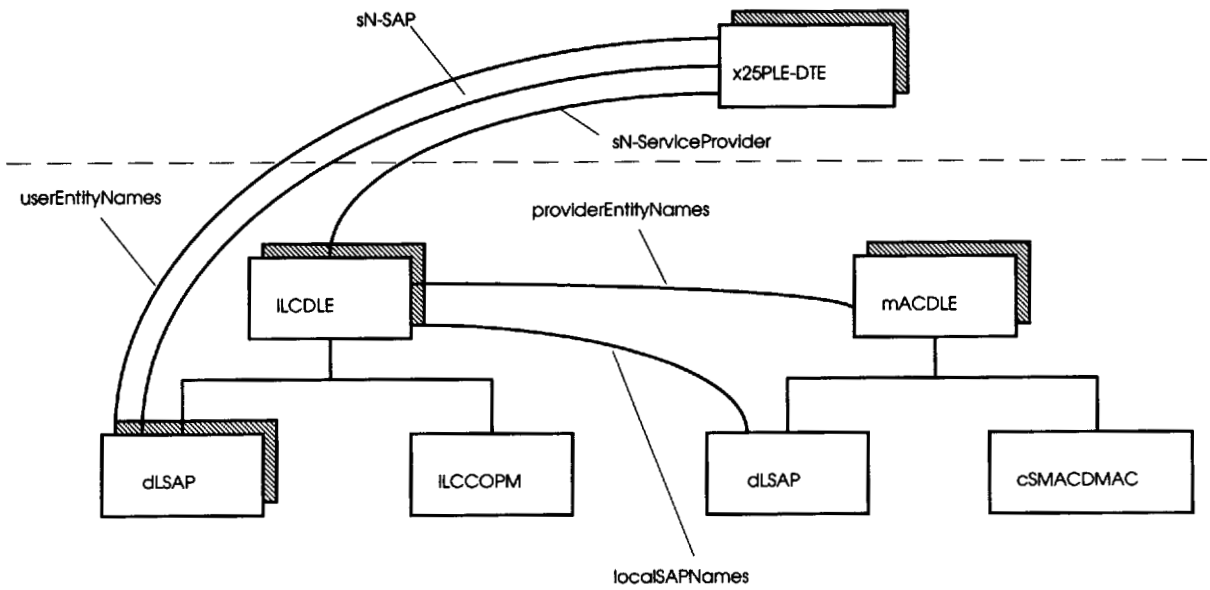


**Figure D.3 - CONS over LLCCO over CSMA/CD**



Copyright International Organization for Standardization
Provided by IHS under license with ISO
No reproduction or networking permitted without license from IHS
Not for Resale

## Index

C
commonCreationDeletion-B, 8
commonDeactivateConnection-B, 16
commonSLPConnection-P, 15
commonStateChange-B, 8
configurationEventsReporting-P, 46
counterDifference-P, 46
counterDifference-P-B, 47
counterModulus, 49
counterOverflow-P, 47
counterOverflow-P-B, 48
counterTMinusGP, 49
D
datalinkEntity, 10
datalinkEntity-datalinkSubsystem-Management, 10
datalinkSubsystem, 9
derivedGauge, 49
derivedGaugeNotCurrent, 50
dLSAP, 11
dLSAP-datalinkEntity-Management, 11
E
estimateOfMean, 49
eWMAMetricMonitor, 46
eWMAMetricMonitor-ILCDLE-Management, 49
eWMAMetricMonitor-mACDLE-Management, 49
eWMAMetricMonitor-P-B, 47
F
fCSErrorsReceived, 18
framesReceivedOK, 24
framesTransmittedOK, 25
fRMR, 21
fRMRReceivedCommunicationsAlarm-B, 17
fRMRsReceived, 18
fRMRsSent, 18
G
granularityPeriod, 46
I
iFrameDataOctetsReceived, 18
iFrameDataOctetsSent, 18
iFramesReceived, 19
iFramesSent, 19
interfaceType, 19
K
k, 19
L
lAPBDLE, 12
lLCCLPM, 28
lLCCLPM-ILCDLE-Management, 28
lLCCOPM, 29
lLCCOPM-ILCDLE-Management, 29
lLCDLE, 27
localMACAddresses, 25
M
mAC, 24
mAC-mACDLE-Automatic, 24
mAC-mACDLE-Management, 24
mACAddress, 25
mACDLE, 23
mACId, 25



Copyright International Organization for Standardization
Provided by IHS under license with ISO
No reproduction or networking permitted without license from IHS
Not for Resale

mLP-P, 12
movingTimePeriod, 50
mT1Timer, 13
mT2-P, 12
mT2Timer, 13
mT3Timer, 13
multicastFramesReceivedOK, 25
multicastFramesTransmittedOK, 25
N
n1, 19
n2, 19
O
observedAttributeId, 49
observedManagedObjectInstance, 50
octetsReceivedOK, 26
octetsTransmittedOK, 26
P
pollsReceived, 19
providerEntityNames, 10
R
rEJsReceived, 20
rEJsSent, 20
resourceInfo, 45
resourceTypeId, 44
resourceTypeId-ILCDLE-Automatic, 44
resourceTypeId-mACDLE-Automatic, 44
resourceTypeIdName, 45
rNRsReceived, 20
rNRsSent, 20
S
sABMsReceived, 20
sABMsSent, 20
scanner, 45
scannerId, 46
sequenceModulus, 20
severityIndicatingThreshold, 50
severityIndicatingThreshold-B, 48
sLPConnection, 15
sLPConnection-P, 15
sLPConnection-sLPPM-Automatic, 18
sLPConnection-sLPPM-Automatic-B, 17
sLPConnection-sLPPM-Management, 18
sLPConnection-sLPPM-Management-B, 17
sLPConnectionIVMO, 22
sLPConnectionIVMO-P, 22
sLPConnectionIVMO-sLPPM-Management, 22
sLPConnectionIVMOId, 22
sLPPM, 14
sLPPM-IAPBDLE-Management, 14
sLPProtocolState, 20
T
t1Timer, 21
t2Timer, 21
t3-P, 16
t3IVMO-P, 22
t3Timer, 21
t4Timer, 21
timers, 8
timesT1Expired, 21
timesT3Expired, 21



Copyright International Organization for Standardization
Provided by IHS under license with ISO
No reproduction or networking permitted without license from IHS
Not for Resale

**ICS 35.100.20**

**Descriptors:** data processing, information interchange, telecommunications, network interconnection, open systems interconnection, data link layer, management

Price based on 62 pages

Copyright International Organization for Standardization
Provided by IHS under license with ISO
No reproduction or networking permitted without license from IHS
Not for Resale