INTERNATIONAL STANDARD

ISO/IEC 10733

Second edition
1998-12-15

Information technology — Elements of management information related to the OSI Network Layer

Technologies de l'information — Éléments d'information de gestion relatifs à la couche OSI réseau

Reference number
ISO/IEC 10733:1998(E)

Copyright International Organization for Standardization
Provided by IHS under license with ISO
No reproduction or networking permitted without license from IHS

Not for Resale

© ISO/IEC 1998

All rights reserved. Unless otherwise specified, no part of this publication may be reproduced or utilized in any form or by any means, electronic or mechanical, including photocopying and microfilm, without permission in writing from the publisher.

ISO/IEC Copyright Office • Case postale 56 • CH-1211 Genève 20 • Switzerland

Printed in Switzerland

Copyright International Organization for Standardization
Provided by IHS under license with ISO
No reproduction or networking permitted without license from IHS
Not for Resale

CONTENTS

Page

1 Scope 1

2 Normative references 1
- 2.1 Identical Recommendations | International Standards 1
- 2.2 Paired Recommendations | International Standards equivalent in technical content 2
- 2.3 Additional references 3

3 Definitions 3
- 3.1 Basic Reference model 3
- 3.2 Information model 4
- 3.3 Guidelines for the Definition of Managed Objects (GDMO) 4
- 3.4 Management framework 4

4 Abbreviations 4

5 Elements of network layer management information 5
- 5.1 Managed object hierarchy 5
  - 5.1.1 Summary of managed objects 5
  - 5.1.2 Containment hierarchy 6
  - 5.1.3 Relationships 8
  - 5.1.4 Minimum event filtering capabilities 8
  - 5.1.5 Use of optional fields 8
- 5.2 Common behaviour templates 9
- 5.3 The network subsystem managed object 10
- 5.4 The network entity managed object 10
- 5.5 The NSAP managed object 11
- 5.6 The connectionless-mode network service managed object 12
- 5.7 The linkage managed object 17
- 5.8 The connection-mode network service managed object 26
- 5.9 The network connection managed object 27
- 5.10 The X.25 PLE and related managed objects 28
  - 5.10.1 The X.25 PLE managed object 28
  - 5.10.2 The X.25 PLE initial values managed object 28
  - 5.10.3 The X.25 PLE DTE managed object 30
  - 5.10.4 The X.25 PLE DCE managed object 32
  - 5.10.5 The X.25 PLE DTE initial values managed object 34
  - 5.10.6 The X.25 PLE DCE initial values managed object 36
- 5.11 The virtual circuit and related managed objects 56
  - 5.11.1 The virtual managed object 56
  - 5.11.2 The virtual circuit DTE managed object 56
  - 5.11.3 The virtual circuit DCE managed object 57
  - 5.11.4 The permanent virtual circuit DTE managed object 57
  - 5.11.5 The permanent virtual circuit DCE managed object 57
  - 5.11.6 The virtual call initial values managed object 49
  - 5.11.7 The virtual call DTE managed object 49
  - 5.11.8 The virtual call DCE managed object 50
  - 5.11.9 The Recommendation D Series counts managed object 50

6 ASN.1 modules 58
- 6.1 Object identifier definitions 58
  - 6.1.1 Abbreviations 58
  - 6.1.2 Other Object Identifier definitions 58
- 6.2 Other definitions 59

Copyright International Organization for Standardization
Provided by IHS under license with ISO
No reproduction or networking permitted without license from IHS
Not for Resale

Page

7 Conformance 61
7.1 Conformance requirements to this Recommendation | International Standard 61
7.1.1 Static conformance 61
7.1.2 Dynamic conformance 62
7.1.3 Management implementation conformance statement requirements 62
7.2 Protocol specific conformance requirements 62
7.2.1 Conformance to the CLNS 62
7.2.2 Conformance to the CONS 62
7.2.3 Conformance to the X.25 DTE 62
7.2.4 Conformance to the X.25 DCE 62
Annex A – Allocation of Object Identifiers 63
Annex B – Shorthand description of Managed Objects 69
Annex C – Examples of the use of relationship attributes 83
Annex D – MCS proforma 87
D.1 Introduction 87
D.1.1 Purpose and structure 87
D.1.2 Instructions for completing the MCS proforma to produce an MCS 87
D.1.3 Symbols, abbreviations and terms 87
D.2 Identification of the implementation 87
D.2.1 Date of statement 87
D.2.2 Identification of the implementation 88
D.2.3 Contact 88
D.3 Identification of the Recommendation | International Standard in which the management information is defined 88
D.3.1 Technical corrigenda implemented 88
D.3.2 Amendments implemented 88
D.4 Management conformance summary 89
Annex E – MICS proforma 95
E.1 Introduction 95
E.2 Instructions for completing the MICS proforma to produce a MICS 95
E.3 Symbols, abbreviations and terms 95
E.4 Statement of conformance to the management information 95
E.4.1 Attributes 95
E.4.2 Attribute groups 127
E.4.3 Create and delete management operations 130
E.4.4 Notifications 134
E.4.5 Actions 139
E.4.6 Parameters 141
Annex F – MOCS proforma 142
F.1 Introduction 142
F.1.1 Instructions for completing the MOCS proforma to produce a MOCS 142
F.1.2 Symbols, abbreviations and terms 142
F.2 The CLNS managed object 142
F.2.1 Statement of conformance to the managed object class 142
F.2.2 Packages 143
F.2.3 Attributes 143
F.2.4 Attribute group 149
F.2.5 Action 149
F.2.6 Notification 151
F.2.7 Parameter 158
F.3 The CONS managed object 159
F.3.1 Statement of conformance to the managed object class 159
F.3.2 Packages 159
F.3.3 Attributes 159
F.3.4 Attribute group 161
F.3.5 Action 162
F.3.6 Notifications 164

Copyright International Organization for Standardization
Provided by IHS under license with ISO
No reproduction or networking permitted without license from IHS Not for Resale

Page

F.4 The Recommendation D-Series counts managed object 167
F.4.1 Statement of conformance to the managed object class 167
F.4.2 Packages 167
F.4.3 Attributes 167
F.4.4 Attribute groups 169
F.4.5 Notifications 170
F.5 The linkage managed object 172
F.5.1 Statement of conformance to the managed object class 172
F.5.2 Packages 172
F.5.3 Attributes 173
F.5.4 Attribute group 180
F.5.5 Action 181
F.5.6 Notifications 182
F.5.7 Parameters 189
F.6 The NSAP managed object 189
F.6.1 Statement of conformance to the managed object class 189
F.6.2 Packages 190
F.6.3 Attributes 190
F.6.4 Notifications 192
F.7 The network connection managed object 194
F.7.1 Statement of conformance to the managed object class 194
F.7.2 Packages 194
F.7.3 Attributes 194
F.7.4 Action 196
F.7.5 Notifications 197
F.8 The network entity managed object 199
F.8.1 Statement of conformance to the managed object class 199
F.8.2 Packages 199
F.8.3 Attributes 199
F.8.4 Notification 201
F.9 The network subsystem managed object 203
F.9.1 Statement of conformance to the managed object class 203
F.9.2 Packages 203
F.9.3 Attributes 203
F.10 The permanent virtual circuit-DCE managed object 205
F.10.1 Statement of conformance to the managed object class 205
F.10.2 Packages 205
F.10.3 Attributes 205
F.10.4 Attribute Groups 208
F.10.5 Notifications 209
F.11 The permanent virtual circuit-DTE managed object 212
F.11.1 Statement of conformance to the managed object class 212
F.11.2 Packages 212
F.11.3 Attributes 212
F.11.4 Attribute Groups 215
F.11.5 Notifications 216
F.12 The virtual call DCE managed object 218
F.12.1 Statement of conformance to the managed object class 218
F.12.2 Packages 218
F.12.3 Attributes 218
F.12.4 Attribute Groups 221
F.12.5 Actions 222
F.12.6 Notifications 223
F.13 The virtual call-DTE managed object 225
F.13.1 Statement of conformance to the managed object class 225
F.13.2 Packages 225
F.13.3 Attributes 225
F.13.4 Attribute Groups 228
F.13.5 Actions 229
F.13.6 Notifications 230

--`,,```,,,,````-`-`,,`,,`,`,,`---

Copyright International Organization for Standardization
Provided by IHS under license with ISO
No reproduction or networking permitted without license from IHS
Not for Resale

Page

F.14 The virtual call initial values managed object 232
F.14.1 Statement of conformance to the managed object class 232
F.14.2 Packages 232
F.14.3 Attributes 232
F.14.4 Notifications 234
F.15 The X25 PLE DCE managed object 236
F.15.1 Statement of conformance to the managed object class 236
F.15.2 Packages 236
F.15.3 Attributes 236
F.15.4 Attribute Groups 240
F.15.5 Actions 241
F.15.6 Notifications 242
F.16 The X25 PLE DTE managed object 245
F.16.1 Statement of conformance to the managed object class 245
F.16.2 Packages 245
F.16.3 Attributes 245
F.16.4 Attribute Groups 249
F.16.5 Actions 250
F.16.6 Notifications 251
F.16.7 Parameters 256
F.17 The X25 PLE DCE initial values managed object 256
F.17.1 Statement of conformance to the managed object class 256
F.17.2 Packages 256
F.17.3 Attributes 256
F.17.4 Notifications 258
F.18 The X25 PLE DTE initial values managed object 260
F.18.1 Statement of conformance to the managed object class 260
F.18.2 Packages 260
F.18.3 Attributes 260
F.18.4 Notifications 263

Annex G – MRCS proforma form name binding 265
G.1 Introduction 265
G.2 Instructions for completing the MRCS proforma for name binding to produce a MRCS 265
G.3 Statement of conformance to the name binding 266

Copyright International Organization for Standardization
Provided by IHS under license with ISO
No reproduction or networking permitted without license from IHS Not for Resale

Foreword

ISO (the International Organization for Standardization) and IEC (the International Electrotechnical Commission) form the specialized system for worldwide standardization. National bodies that are members of ISO or IEC participate in the development of International Standards through technical committees established by the respective organization to deal with particular fields of technical activity. ISO and IEC technical committees collaborate in fields of mutual interest. Other international organizations, governmental and non-governmental, in liaison with ISO and IEC, also take part in the work.

In the field of information technology, ISO and IEC have established a joint technical committee, ISO/IEC JTC 1. Draft International Standards adopted by the joint technical committee are circulated to national bodies for voting. Publication as an International Standard requires approval by at least 75 % of the national bodies casting a vote.

International Standard ISO/IEC 10733 was prepared by Joint Technical Committee ISO/IEC JTC 1, *Information technology*, Subcommittee SC 6, *Telecommunications and information exchange between systems*, in collaboration with ITU-T. The identical text is published as ITU-T Recommendation X.283.

This second edition cancels and replaces the first edition (ISO/IEC 10733:1993), which has been technically revised. It also incorporates Amendment 1:1996, Technical Corrigendum 1:1994, Technical Corrigendum 2:1996 and Technical Corrigendum 3:1997.

Annexes A to G form an integral part of this International Standard.

Copyright International Organization for Standardization
Provided by IHS under license with ISO
No reproduction or networking permitted without license from IHS
Not for Resale

Introduction

This Recommendation | International Standard is one of a set of Recommendations and International Standards produced to facilitate the interconnection of open systems. The set of Recommendations and International Standards covers the services, protocols and management information required to achieve such interconnection.

This Recommendation | International Standard is positioned with respect to other related Recommendations and International Standards by the layers defined in the *Reference Model for Open System Interconnection* (see ITU-T Rec. X.200 | ISO/IEC 7498-1). In particular, it is concerned with the definition of Network Layer management information.

This Recommendation | International Standard is an update of ITU-T Rec. X.283 (1993) and ISO/IEC 10733:1993 to incorporate all Amendments and Technical corrigenda.

Copyright International Organization for Standardization
Provided by IHS under license with ISO
No reproduction or networking permitted without license from IHS Not for Resale

INTERNATIONAL STANDARD

ITU-T RECOMMENDATION

INFORMATION TECHNOLOGY – ELEMENTS OF MANAGEMENT INFORMATION RELATED TO THE OSI NETWORK LAYER

1 Scope

This Recommendation | International Standard provides the specification of management information within an Open System related to those operations of the OSI Network Layer. Specifics on how Network layer management is accomplished is beyond the scope of this Recommendation | International Standard. Network Layer management information is defined by specifying:

- the managed object class definition of Network Layer Managed Objects following guidelines put forth by the *Structure of Management Information* (see Recommendations X.720-X.724 and ISO/IEC 10165);
- the relationship of the Managed Objects and attributes to both the operation of the layer and to other objects and attributes of the layer; and
- the action type operations on the attributes of Network Layer Managed Objects that are available to OSI Systems Management.

Annexes D, E, F and G, which are integral parts of this Recommendation | International Standard, provide ICS proformas associated with Network Layer management information.

2 Normative references

The following Recommendations and International Standards contain provisions which, through reference in this text, constitute provisions of this Recommendation | International Standard. At the time of publication, the editions indicated were valid. All Recommendations and Standards are subject to revision, and parties to agreements based on this Recommendation | International Standard are encouraged to investigate the possibility of applying the most recent edition of the Recommendations and Standards listed below. Members of IEC and ISO maintain registers of currently valid International Standards. The Telecommunication Standardization Bureau of the ITU maintains a list of the currently valid ITU-T Recommendations.

2.1 Identical Recommendations | International Standards

- ITU-T Recommendation X.200 (1994) | ISO/IEC 7498-1:1994, *Information technology – Open Systems Interconnection – Basic Reference Model: The Basic Model.*
- ITU-T Recommendation X.213 (1995) | ISO/IEC 8348:1996, *Information technology – Open Systems Interconnection – Network service definition.*
- ITU-T Recommendation X.233 (1993) | ISO/IEC 8473-1:1994, *Information technology – Protocol for providing the connectionless-mode network service: Protocol specification*.
- ITU-T Recommendation X.263 (1995) | ISO/IEC TR 9577:1996, *Information technology – Protocol Identification in the network layer*.
- ITU-T Recommendation X.284 (1997) | ISO/IEC 10737:1998, *Information technology – Elements of management information related to the OSI Transport Layer*.
- CCITT Recommendation X.612 (1992) | ISO/IEC 9574:1992, *Information technology – Provision of the OSI Connection – mode network service by packet-mode terminal equipment connected to an Integrated Services Digital Network (ISDN).*
- CCITT Recommendation X.701 (1992) | ISO/IEC 10040:1992, *Information technology – Open Systems Interconnection – Systems management overview.*
- ITU-T Recommendation X.710 (1997) | ISO/IEC 9595:1998, *Information technology – Open Systems Interconnection – Common management information service.*
- ITU-T Recommendation X.711 (1997) | ISO/IEC 9596-1:1998, *Information technology – Open Systems Interconnection – Common management information protocol: Specification.*

--`,,```,,,,````-`-,,`,,`,`,,`---

Copyright International Organization for Standardization
Provided by IHS under license with ISO
No reproduction or networking permitted without license from IHS
Not for Resale

- CCITT Recommendation X.720 (1992) | ISO/IEC 10165-1:1993, *Information technology – Open Systems Interconnection – Structure of management information: Management information model.*
- CCITT Recommendation X.721 (1992) | ISO/IEC 10165-2:1992, *Information technology – Open Systems Interconnection – Structure of management information: Definition of management information.*
- CCITT Recommendation X.722 (1992) | ISO/IEC 10165-4:1992, *Information technology – Open Systems Interconnection – Structure of management information: Guidelines for the definition of managed objects.*
- ITU-T Recommendation X.723 (1993) | ISO/IEC 10165-5:1994, *Information technology – Open Systems Interconnection – Structure of management information: Generic management information.*
- ITU-T Recommendation X.724 (1996) | ISO/IEC 10165-6:1997, *Information technology – Open Systems Interconnection – Structure of management information: Requirements and guidelines for implementation conformance statement proformas associated with OSI management*.
- CCITT Recommendation X.730 (1992) | ISO/IEC 10164-1:1993, *Information technology – Open Systems Interconnection – Systems management: Object management function.*
- CCITT Recommendation X.731 (1992) | ISO/IEC 10164-2:1992, *Information technology – Open Systems Interconnection – Systems management: State management function.*
- CCITT Recommendation X.732 (1992) | ISO/IEC 10164-3:1993, *Information technology – Open Systems Interconnection – Systems management: Attributes for representing relationships.*
- CCITT Recommendation X.733 (1992) | ISO/IEC 10164-4:1992, *Information technology – Open Systems Interconnection – Systems management: Alarm Reporting Function.*
- CCITT Recommendation X.734 (1992) | ISO/IEC 10164-5:1993, *Information technology – Open Systems Interconnection – Systems management: Event report management function.*
- CCITT Recommendation X.735 (1992) | ISO/IEC 10164-6:1993, *Information technology – Open Systems Interconnection – Systems management: Log control function.*

2.2 Paired Recommendations | International Standards equivalent in technical content

- CCITT Recommendation X.208 (1988), *Specification of Abstract Syntax Notation One (ASN.1).*

  ISO/IEC 8824:1990, *Information technology – Open Systems Interconnection – Specification of Abstract Syntax Notation One (ASN.1).*
- CCITT Recommendation X.209 (1988), *Specification of basic encoding rules for Abstract Syntax Notation one (ASN.1).*

  ISO/IEC 8825:1990, *Information technology – Open Systems Interconnection – Specification of Basic Encoding Rules for Abstract Syntax Notation One (ASN.1).*
- ITU-T Recommendation X.223 (1993), *Use of X.25 to provide the OSI connection-mode network service for ITU-T applications.*

  ISO/IEC 8878:1992, *Information technology – Telecommunications and information exchange between systems – Use of X.25 to provide the OSI Connection-mode Network Service*.
- ITU-T Recommendation X.290 (1995), *OSI conformance testing methodology and framework for protocol Recommendations for ITU-T applications – General concepts.*

  ISO/IEC 9646-1:1994, *Information technology – Open Systems Interconnection – Conformance testing methodology and framework – Part 1: General concepts.*
- ITU-T Recommendation X.291 (1995), *OSI conformance testing methodology and framework for protocol Recommendations for ITU-T applications – Abstract test suite specification.*

  ISO/IEC 9646-2:1994, *Information technology – Open Systems Interconnection – Conformance testing methodology and framework – Part 2: Abstract Test Suite specification.*
- ITU-T Recommendation X.296 (1995), *OSI conformance testing methodology and framework for protocol Recommendations for ITU-T applications – Implementation conformance statements.*

  ISO/IEC 9646-7:1995, *Information technology – Open Systems Interconnection – Conformance testing methodology and framework – Part 7: Implementation Conformance Statements.*
- CCITT Recommendation X.700 (1992), *Management Framework for Open Systems Interconnection for CCITT applications*.

  ISO/IEC 7498-4:1989, *Information processing systems – Open Systems Interconnection – Basic Reference Model – Part 4: Management framework.*

--`,,```,,,,````-`-`,,`,,`,`,,`---

Copyright International Organization for Standardization
Provided by IHS under license with ISO
No reproduction or networking permitted without license from IHS
Not for Resale

2.3 Additional references

- CCITT Recommendation D.10 (1991), *General tariff principles for international public data communication services*.
- CCITT Recommendation D.11 (1991), *Special tariff principles for international packet-switched public data communication services by means of the virtual call facility*.
- CCITT Recommendation D.12 (1980), *Measurement unit for charging by volume in the international packet-switched data communication service*.
- ITU-T Recommendation E.164 (1997), *The international public telecommunication numbering plan*.
- ITU-T Recommendation X.2 (1996), *International data transmission services and optional user facilities in public data networks and ISDNs*.
- ITU-T Recommendation X.25 (1993), *Interface between Data Terminal Equipment (DTE), and Data Circuit-terminating Equipment (DCE) for terminals operating in the packet mode and connected to public data networks by dedicated circuit*.
- ITU-T Recommendation X.121 (1996), *International numbering plan for public data networks*.
- ISO/IEC 8208:1995, *Information technology – Data communications – X.25 Packet Layer Protocol for Data Terminal Equipment*.
- ISO 8648:1988, *Information processing systems – Open Systems Interconnection – Internal organization of the Network Layer*.
- ISO/IEC 8881:1989, *Information processing systems – Data communications – Use of the X.25 packet level protocol in local area networks*.
- ISO 9542:1988, *Information processing systems – Telecommunications and information exchange between systems – End system to Intermediate system routeing exchange protocol for use in conjunction with the Protocol for providing the connectionless-mode network service (ISO 8473)*.
- ISO/IEC 10030:1990, *Information technology – Telecommunications and information exchange between systems – End System Routeing Information Exchange Protocol for use in conjunction with ISO/IEC 8878*.
- ISO/IEC 10177:1993, *Information technology – Telecommunications and information exchange between systems – Provision of the connection-mode Network internal layer service by intermediate systems using ISO/IEC 8208, the X.25 Packet Layer Protocol.*
- ISO/IEC TR 13532:1995, *Information technology – Telecommunications and information exchange between systems – Protocol combinations to provide and support the OSI Network Service*.
- ISO/IEC 10589:1992, *Information technology – Telecommunications and information exchange between systems – Intermediate system to intermediate system intra-domain routeing information exchange protocol for use in conjunction with the protocol for providing the connectionless-mode Network Service (ISO 8473)*.

3 Definitions

For the purposes of this Recommendation | International Standard, the following definitions apply.

3.1 Basic Reference model

This Recommendation | International Standard makes use of the following terms defined in *OSI Reference Model* (see ITU-T Rec. X.200 | ISO/IEC 7498-1):

a) Open System;

b) (N)-Service Access Point;

c) Network Layer;

d) Network Protocol;

e) Layer Management;

f) Systems Management.

Copyright International Organization for Standardization
Provided by IHS under license with ISO
No reproduction or networking permitted without license from IHS
Not for Resale

3.2 Information model

This Recommendation | International Standard makes use of the following terms defined in *Structure of Management Information: Management Information Model* (see CCITT Rec. X.720 | ISO/IEC 10165-1):

a) Attributes;

b) Attribute Type;

c) Containment;

d) Distinguished Name;

e) Inheritance;

f) Managed Object;

g) Management Operations;

h) Notifications;

i) Object Class;

j) Relative Distinguished Name;

k) Subclass;

l) Superclass.

3.3 Guidelines for the Definition of Managed Objects (GDMO)

This Recommendation | International Standard makes use of the following terms defined in *Structure of Management Information: Guidelines for the Definition of Managed Objects* (see CCITT Rec. X.722 | ISO/IEC 10165-4).

a) Managed Object Class Definition;

b) Template;

c) Parameter.

3.4 Management framework

This Recommendation | International Standard makes use of the following term defined in *Management Framework for Open Systems Interconnection* (see CCITT Rec. X.700 | ISO/IEC 7498-4).

– Management Information.

4 Abbreviations

Within the Managed Object definitions and GDMO templates, the following abbreviations are used in the standard-name element of a document-identifier when making references to other documents.

DMI	CCITT Rec. X.721 (1992) | ISO/IEC 10165-2:1992
GMI	ITU-T Rec. X.723 (1993) | ISO/IEC 10165-5:1994

For the purposes of this Recommendation | International Standard, the following symbols and abbreviations apply:

BCUG	Bilateral Closed User Group
CLNP	Connectionless-mode Network Protocol
CLNS	Connectionless-mode Network Service
CMIP	Common Management Information Protocol
CMIS	Common Management Information Service
CONS	Connection-mode Network Service
CUG	Closed User Group
ES	End System
ESH	End System Hello
ER PDU	Error Report Protocol Data Unit
IS	Intermediate System
ISH	Intermediate System Hello
IVMO	Initial Values Managed Object
LCN	Logical Channel Number
MCS	Management Conformance Summary

--`,,```,,,,````-`-`,,`,,`,`,,`---

Copyright International Organization for Standardization
Provided by IHS under license with ISO
No reproduction or networking permitted without license from IHS
Not for Resale

MICS	Management Information Conformance Statement
MO	Managed Object
MOCS	Managed Object Conformance Statement
MRCS	Managed Relationship Conformance Statement
NSAP	Network Service Access Point
NSE	Network Service Element
NUI	Network User Identification
PLE	Packet Layer Entity
PVC	Permanent Virtual Circuit
RD PDU	Redirect Protocol Data Unit
RDN	Relative Distinguished Name
SNDCF	Subnetwork Dependent Convergence Function
SNPA	Subnetwork Point of Attachment
VC	Virtual Call

5 Elements of network layer management information

5.1 Managed object hierarchy

5.1.1 Summary of managed objects

The following set of managed object classes are defined for the OSI Network Layer:

a) The network subsystem managed object (see 5.3).

b) The network entity managed object (see 5.4).

c) The NSAP managed object (see 5.5).

d) The connectionless-mode network service managed object (see 5.6).

e) The linkage managed object (see 5.7).

f) The connection-mode network service managed object (see 5.8).

g) The network connection managed object (see 5.9).

h) The X.25 PLE DTE managed object (see 5.10.3).

i) The X.25 PLE DCE managed object (see 5.10.4).

j) The X.25 PLE DTE initial values managed object (see 5.10.5).

k) The X.25 PLE DCE initial values managed object (see 5.10.6).

l) The permanent virtual circuit DTE managed object (see 5.11.4).

m) The permanent virtual circuit DCE managed object (see 5.11.5).

n) The virtual call initial values managed object (see 5.11.6).

o) The virtual call DTE managed object (see 5.11.7).

p) The virtual call DCE managed object (see 5.11.8).

q) The Recommendation D Series counts managed object (see 5.11.9).

The following Managed Object classes are never instantiated, but exist only for the purposes of deriving subclasses.

a) The X.25 PLE managed object (see 5.10.1).

b) The X.25 PLE initial values managed object (see 5.10.2).

c) The virtual circuit managed object (see 5.11.1).

d) The virtual circuit DTE managed object (see 5.11.2).

e) The virtual circuit DCE managed object (see 5.11.3).

These Managed Objects represent OSI Management's view of those elements of an Open System which support the OSI Network Service subject to OSI management operations.

5.1.2 Containment hierarchy

The containment hierarchy is illustrated in Figure 1. Managed Objects which can have multiple instances are illustrated by shadowed (multiple) boxes. These objects are defined in detail in the following subclauses.

Copyright International Organization for Standardization
Provided by IHS under license with ISO
No reproduction or networking permitted without license from IHS
Not for Resale

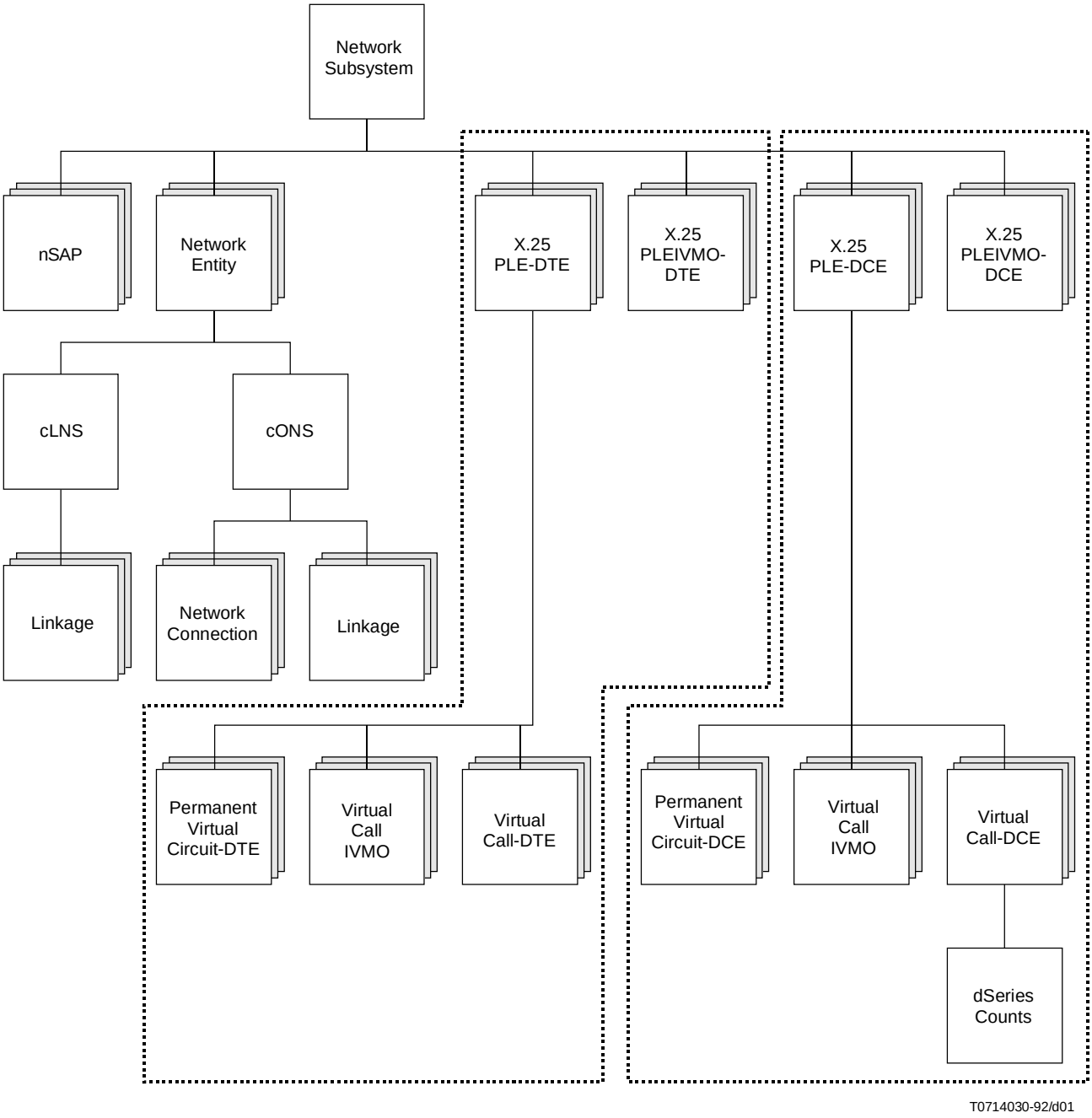

Figure 1 – Network Layer containment hierarchy

The networkSubsystem MO is subordinate to the system MO. The x25PLE MO and IVMOs are examples of what are termed 'SNPA' MOs. The 'SNPA' MOs are subnetwork specific MOs. It is expected that there will in future be a number of additional 'SNPA' MOs, for example for ISDN.

The 'SNPA' MO is concerned with the protocol used to access a subnetwork. For example, there is an 'SNPA' MO corresponding to each X.25 Packet layer entity. The cLNS MO is concerned with the functions of the CLNS protocols (see ITU-T Rec. X.233 | ISO/IEC 8473-1, ISO 9542 and ISO/IEC 10589) which apply to the general operation of the protocol as a whole rather than being specifically related to individual points of attachment, whereas the linkage MO applies to the subnetwork dependent convergence functions. The cONS MO and its associated linkage MOs apply similarly to protocols associated with CONS (see ITU-T Rec. X.223 | ISO/IEC 8878, CCITT Rec. X.612 | ISO/IEC 9574, ISO/IEC 10030, ISO/IEC 10177, etc.)

For the requirements regarding which MOs in the containment tree shall be instantiated for a conforming implementation, see the applicable clauses of the conformance statement.

--`,,```,,,,````-`-`,,`,,`,`,,`---

Copyright International Organization for Standardization
Provided by IHS under license with ISO
No reproduction or networking permitted without license from IHS
Not for Resale

5.1.3 Relationships

5.1.3.1 General

The following subclauses describe the individual relationships. The use of relationship attributes is illustrated by examples in Annex C.

5.1.3.2 Linkage

There is a relationship (sN-ServiceProvider and sN-SAP both pointing to the same MO) between linkage MOs and 'SNPA' MOs. For example, a linkage concerned with the operation of the ITU-T Rec. X.233 | ISO/IEC 8473-1 SNDCF for X.25 has a relationship with an x25PLE-DTE MO. A linkage has a relationship identifying only one 'SNPA', so in the case of a network entity containing one ITU-T Rec. X.233 | ISO/IEC 8473-1 protocol machine operating over a number of X.25 Packet Layer Entities, there would be a number of linkage MOs, each related to a different x25PLE-DTE MO. But although one linkage is related to only one 'SNPA', it is possible for a number of other linkages to be related to the same 'SNPA'; for example, there could be cONS Linkages and cLNS linkages both using the same x25PLE-DTE and therefore the same 'SNPA' MO.

In some cases of network layer operation there is no specific access protocol; for example, ITU-T Rec. X.233 | ISO/IEC 8473-1 contains an SNDCF for use over the data link service directly. In such cases, the linkage has relationships (sN-ServiceProvider and sN-SAP pointing to different MOs), not to an 'SNPA' but to appropriate MOs in the Data Link Layer.

5.1.3.3 NSAPs

There is a relationship (localSAPNames) between a networkEntity MO and an nSAP MO. Each nSAP MO is related to only one networkEntity, although one networkEntity may be related to several nSAP MOs.

5.1.3.4 Layer n + 1 clients

The nSAP MO has a set of relationships (userEntityName) to Layer n + 1 clients (typically the Transport Layer Entity). The Transport Layer Entity has a relationship (actualNSAP) to the nSAP MO.

5.1.3.5 Layer n – 1 services

Both the linkage and x25PLE MOs have relationships (sN-ServiceProvider and sN-SAP) to the appropriate Data Link Layer MOs.

5.1.3.6 Connections

There is a relationship (underlyingConnectionNames) between a transportConnection MO and its underlying networkConnection MO (if one exists), and between the networkConnection MO and the underlying virtualCall-DTE MO. The relationship between the virtualCall-DTE MO and any underlying Datalink Layer MO is implicitly available as a result of the parent x25PLE-DTE or x25PLE-DCE MOs relationships to the Data Link Layer, as described above.

In addition there is a relationship (localNSAPMO) from the networkConnection MO to the corresponding nSAP MO.

5.1.4 Minimum event filtering capabilities

The network layer management definitions embodied in this Recommendation | International Standard imply the frequent, and possibly excessive, generation of notifications during regular layer operation. These notifications are especially useful for effective fault management, where they facilitate the tracing and pinpointing of error situations. To avoid the excessive dissemination of these event reports under normal operating conditions, it is advisable for a managed system to have, as a minimum, the capability to perform discrimination based upon:

a) The source managed object class.

b) The object identifier values in the probable cause and specific problems field of communication alarms, and the communication type field communication informations.

5.1.5 Use of optional fields

Where reference is made in this Recommendation | International Standard to ASN.1 syntax defined in ITU-T Rec. X.723 | ISO/IEC 10165-5 or CCITT Rec. X.721 | ISO/IEC 10165-2, only the following fields shall be employed:

a) those which are not OPTIONAL in the ASN.1 syntax;

b) those which are OPTIONAL, but whose use is explicitly required by this Recommendation | International standard;

c) those which are OPTIONAL, but whose ASN.1 type is SET OF ManagementExtension.

The use of any other fields is prohibited.

Copyright International Organization for Standardization
Provided by IHS under license with ISO
No reproduction or networking permitted without license from IHS
Not for Resale

5.2 Common behaviour templates

commonCreationDeletion-B BEHAVIOUR

DEFINED AS

!Managed object class imports the ISO/IEC 10165-2 objectCreation and objectDeletion notifications. Used as follows:
objectCreation - Generated whenever an instance of the managed object class is created. Implementations may optionally include the sourceIndicator parameter in the notification. If creation occurred as a result of internal operation of the resource, the value 'resourceOperation' is used. If creation occurred in response to a management operation, the value 'managementOperation' is used. A value of 'unknown' may be returned if it is not possible to determine the source of the operation. None of the other optional parameters are used.
objectDeletion - Generated whenever an instance of the managed object class is deleted. Implementations may optionally include the sourceIndicator parameter in the notification. If deletion occurred as a result of internal operation of the resource, the value 'resourceOperation' is used. If deletion occurred in response to a management operation, the value 'managementOperation' is used. A value of 'unknown' may be returned if it is not possible to determine the source of the operation. None of the other optional parameters are used.!;

commonStateChange-B BEHAVIOUR

DEFINED AS

!Managed object class imports the ISO/IEC 10165-2 stateChange notification. Used to report the changes to the operationalState attribute, and where present, the administrativeState attribute. A single parameter set is included in the State change definition field. Only the (mandatory) attributeId and (optional) newAttributeValue parameters are used.!;

octetsSentReceivedCounter-B BEHAVIOUR

DEFINED AS

!The octetsSentCounter and octetsReceivedCounter shall count only user data octets in valid data packets. They shall not count user data octets in data packets which are rejected for any reason, nor user data octets in non data packets.!;

successfulConnectionEstablishment-B BEHAVIOUR

DEFINED AS

!This Package imports the communicationsInformation notification from "GMI".
It is used to report the following events.
successfulConnectionEstablishment: Generated when a connection is successfully established. However, the precise synchronization between the notification and the corresponding protocol and service interface interactions is not defined by this Specification.
The value NLM.successfulConnectionEstablishment shall be reported in the informationType field.!;

deactivateConnection-B BEHAVIOUR

DEFINED AS

!The Deactivate action causes the connection to be terminated. The termination should occur as rapidly as practical, but no particular time constraints are implied. Typically, this action simulates a disconnect request received across the service interface. If a more rapid means for terminating the connection exists, then this should be used. The termination shall occur in conformance to the protocol standard. The Managed Object remains in existence after completion of the Deactivate action. It is subsequently deleted when the connection is terminated, in the same way as if the connection has been terminated by other means. A deactivate action may fail (with the ProcessingError response) if it is temporarily not possible to terminate the connection.!;

--`,,```,,,,````-`-`,,`,,`,`,,`---

Copyright International Organization for Standardization
Provided by IHS under license with ISO
No reproduction or networking permitted without license from IHS
Not for Resale

```
resettingTimer-B BEHAVIOUR
        DEFINED AS
            !This attribute specifies the interval between certain events
            in the operation of the protocol state machine. If the value of this
            attribute is changed to a new value while the protocol state machine
            is in operation, the implementation shall take the necessary steps
            to ensure that for any time interval which was in progress when the
            corresponding attribute was changed, the next expiration of that
            interval takes place no later than the expiration of the interval in
            progress or the specified interval whichever is the sooner. The
            precision with which this time shall be implemented shall be the
            same as that associated with the basic operation of the timer
            attribute.!;
```

5.3 The network subsystem managed object

```
-- Managed Object for Network Layer Subsystem
--
-- There is exactly one of these MOs within a system. It exists to provide a container for the
-- Network Entity MOs, nSAP MOs and the 'SNPA' MOs as described in clause.
--
-- The networkSubsystem managed object cannot be created or deleted
-- explicitly by management operation. It exists inherently in a system;
-- created and deleted as part of system operation.

networkSubsystem MANAGED OBJECT CLASS
        DERIVED FROM "GMI":subsystem;
        CHARACTERIZED BY networkSubsystem-P PACKAGE
            ATTRIBUTES
                "GMI":subsystemId
                    INITIAL VALUE NLM.networkSubsystemId-Value
                    GET;;;

REGISTERED AS { NLM.moi networkSubsystem (1) };

-- Name Bindings

networkSubsystem-system NAME BINDING
        SUBORDINATE OBJECT CLASS networkSubsystem AND SUBCLASSES;
        NAMED BY
            SUPERIOR OBJECT CLASS "DMI":system AND SUBCLASSES;
            WITH ATTRIBUTE "GMI":subsystemId;
REGISTERED AS { NLM.nboi networkSubsystem-system (1) };
```

5.4 The network entity managed object

```
-- There may be multiple instances of these MOs within a system.
-- Its definition permits it to be deleted and created explicitly by
-- management operation, or to be created and deleted automatically
-- as part of system operation.

networkEntity MANAGED OBJECT CLASS
        DERIVED FROM "GMI":communicationsEntity;
        CHARACTERIZED BY networkEntity-P PACKAGE
            BEHAVIOUR commonCreationDeletion-B;
            ATTRIBUTES
                networkEntityTitles
                    GET-REPLACE
                    ADD-REMOVE,
                systemTypes GET;
            NOTIFICATIONS
                "DMI":objectDeletion,
                "DMI":objectCreation;
            ;;
REGISTERED AS { NLM.moi networkEntity (22) };

-- Name Bindings
```

--`,,```,,,,````-`-`,,`,,`,`,,`---

Copyright International Organization for Standardization
Provided by IHS under license with ISO
No reproduction or networking permitted without license from IHS
Not for Resale

```
networkEntity-networkSubsystem-Automatic NAME BINDING
        SUBORDINATE OBJECT CLASS networkEntity AND SUBCLASSES;
        NAMED BY
            SUPERIOR OBJECT CLASS networkSubsystem AND SUBCLASSES;
            WITH ATTRIBUTE "GMI":communicationsEntityId;
        BEHAVIOUR networkEntity-networkSubsystem-Automatic-B BEHAVIOUR
            DEFINED AS !This name binding shall be used when the
                networkEntity MO is created automatically by the operation
                of the system. The details of these operations are outside
                the scope of this Specification.!;;
REGISTERED AS { NLM.nboi networkEntity-networkSubsystem-Automatic (27) };

networkEntity-networkSubsystem-Management NAME BINDING
        SUBORDINATE OBJECT CLASS networkEntity AND SUBCLASSES;
        NAMED BY
            SUPERIOR OBJECT CLASS networkSubsystem AND SUBCLASSES;
            WITH ATTRIBUTE "GMI":communicationsEntityId;
        BEHAVIOUR networkEntity-networkSubsystem-Management-B BEHAVIOUR
            DEFINED AS !This name binding shall be used when the
                networkEntity MO is created automatically by system management.!;;
        CREATE;
        DELETE;
REGISTERED AS { NLM.nboi networkEntity-networkSubsystem-Management (28) };

-- Attributes

networkEntityTitles ATTRIBUTE
        WITH ATTRIBUTE SYNTAX NLM.NAddresses;
        MATCHES FOR EQUALITY;
        BEHAVIOUR networkEntityTitles-B BEHAVIOUR
            DEFINED AS !The set of Network Entity Titles
                (having the same abstract syntax as an NSAP address),
                which unambiguously identify the Network Entity in
                an End or Intermediate System. The value may be entered by a system
                management operation or it may be derived by some local means, for example
                by autoconfiguration.!;;
REGISTERED AS { NLM.aoi networkEntityTitles (3) };

systemTypes ATTRIBUTE
        WITH ATTRIBUTE SYNTAX NLM.SystemTypes;
        MATCHES FOR EQUALITY;
        BEHAVIOUR systemTypes-B BEHAVIOUR
            DEFINED AS !The set of system roles supported by this Network Entity.
                This may be End System, Intermediate System or both. The actual
                role in which a particular instance of the protocol machine
                is operating is determined by the operationalSystemType attribute
                of the cLNS or cONS MO.!;;
REGISTERED AS { NLM.aoi systemTypes (108) };
```

5.5 The NSAP managed object

```
-- There is one nSAP MO for each set of NSAPs supported by the Network Subsystem
-- associated with a single Transport layer client.
-- Each NSAP MO corresponds to a set of one or more NSAPs
-- supported by the Network Subsystem.
--
-- There is not more than one Transport layer client associated with a single nSAP MO,
-- but there may be more than one nSAP MO, and corresponding sets of NSAPs,
-- associated with a single Transport layer client.
-- Its definition permits it to be created and deleted explicitly by
-- management operation or to be created and deleted automatically as
-- part of system operation.

nSAP MANAGED OBJECT CLASS
        DERIVED FROM "GMI":sap2;
        CHARACTERIZED BY nSAP-P PACKAGE
            BEHAVIOUR commonCreationDeletion-B;
```


Copyright International Organization for Standardization
Provided by IHS under license with ISO
No reproduction or networking permitted without license from IHS
Not for Resale

```
        ATTRIBUTES
            "GMI":sap2Address
                INITIAL VALUE DERIVATION RULE nAddressesIV-B
                GET;
        NOTIFICATIONS
            "DMI":objectDeletion,
            "DMI":objectCreation;
    ;;
REGISTERED AS { NLM.moi nSAP (4) };


-- Behaviours

nAddressesIV-B BEHAVIOUR
    DEFINED AS !If the package is created using the nSAP-networkSubsystem-Automatic
        name binding the initial value of this attribute is not constrained by this
        Specification. However, if the package is created using the
        nSAP-networkSubsystem-Management name binding the initial value shall
        be specified in the CMIP create.!;

-- Name Bindings

nSAP-networkSubsystem-Automatic NAME BINDING
    SUBORDINATE OBJECT CLASS nSAP AND SUBCLASSES;
    NAMED BY
        SUPERIOR OBJECT CLASS networkSubsystem AND SUBCLASSES;
        WITH ATTRIBUTE "GMI":sapId;
    BEHAVIOUR nSAP-networkSubsystem-Automatic-B BEHAVIOUR
        DEFINED AS !This name binding shall be used when the nSAP MO is created automatically by the
            operation of the network entity. For example, by the use of autoconfiguration or dynamic
            NSAP Address assignment techniques. The details of the operation of these techniques are
            outside the scope of this Specification.!;;
REGISTERED AS { NLM.nboi nSAP-networkSubsystem-Automatic (4) };


nSAP-networkSubsystem-Management NAME BINDING
    SUBORDINATE OBJECT CLASS nSAP AND SUBCLASSES;
    NAMED BY
        SUPERIOR OBJECT CLASS networkSubsystem AND SUBCLASSES;
        WITH ATTRIBUTE "GMI":sapId;
    BEHAVIOUR nSAP-networkSubsystem-Management-B BEHAVIOUR
        DEFINED AS !This name binding shall be used when the nSAP MO is created by system
            management.
            The value of the sap2Address attribute shall be specified in the CMIP create.!;;
    CREATE;
    DELETE;
REGISTERED AS { NLM.nboi nSAP-networkSubsystem-Management (5) };
```

5.6 The connectionless-mode network service managed object

```
-- There is no more than one of these MOs per network entity.
-- Its definition permits it to be created and deleted explicitly by
-- management operation, but in some systems it will exist inherently
-- and neither creation nor deletion by management operation will be
-- possible. Name bindings are defined for both cases.
--
-- When the protocol machine is operable, the operationalState shall
-- have the value 'enabled'; otherwise it shall have the value 'disabled'.
-- Transitions of operationalState shall be reported using the
-- stateChange notification. A cLNS MO may be created in the
-- 'enabled' operational state.

cLNS MANAGED OBJECT CLASS
    DERIVED FROM "GMI":clProtocolMachine;
    CHARACTERIZED BY cLNS-P PACKAGE
        BEHAVIOUR commonStateChange-B,
            commonCreationDeletion-B;
```

--`,,```,,,,````-`-`,,`,,`,`,,`---

Copyright International Organization for Standardization
Provided by IHS under license with ISO
No reproduction or networking permitted without license from IHS
Not for Resale

```
            ATTRIBUTES
                "DMI":administrativeState GET-REPLACE,
                "GMI":clProtocolMachineId
                    INITIAL VALUE NLM.cLNSId-Value
                    GET,
                supportedProtocols GET,
                operationalSystemType
                    INITIAL VALUE DERIVATION RULE operationalSystemTypeIV-B
                    GET;
            ATTRIBUTE GROUPS
                "DMI":state
                    "DMI":administrativeState
                    "DMI":operationalState;
            ACTIONS
                "GMI":activate,
                "GMI":deactivate;
            NOTIFICATIONS
                "DMI":objectCreation,
                "DMI":objectDeletion,
                "DMI":stateChange;
            ;;
        CONDITIONAL PACKAGES
            cLNS8473-P
                PRESENT IF !The protocol defined in ITU-T Rec. X.233 |ISO/IEC 8473-1 is used to implement
                    the CLNS!,
            cLNSChecksum-P
                PRESENT IF !The ITU-T Rec. X.233 |ISO/IEC 8473-1 Generate Checksum option is
                     implemented!,
-- The following packages are associated with ISO/IEC 10589
            "ISO/IEC 10589":cLNSISISBasic-P
                PRESENT IF !The system is an ISO 10589 IS!,
            "ISO/IEC 10589":cLNSISISAuthentication-P
                PRESENT IF !The system is an ISO 10589 IS
                    and the authentication procedures are implemented!,
            "ISO/IEC 10589":cLNSISISPartitionRepair-P
                PRESENT IF !The system is an ISO 10589 Level 2 IS
                    and the partition repair procedures are implemented!,
            "ISO/IEC 10589":cLNSISISLevel2-P
                PRESENT IF !The system is an ISO 10589 Level 2 IS!,
            "ISO/IEC 10589":cLNSISISLevel2Authentication-P
                PRESENT IF !The system is an ISO 10589 Level 2 IS
                    and the authentication procedures are implemented!;
REGISTERED AS { NLM.moi cLNS (21) };

-- Packages

cLNS8473-P PACKAGE
        BEHAVIOUR cLNS8473-P-B BEHAVIOUR
            DEFINED AS !Present when ITU-T Rec. X.233 |ISO/IEC 8473-1 is used to provide the CLNS.!;,
            cLNS8473PImportedNotifications-B,
            cLNS8473PImportedCounters-B;
        ATTRIBUTES
            "DMI":octetsSentCounter GET,
            "DMI":octetsReceivedCounter GET,
            segmentsReceived GET,
            segmentsSent GET,
            segmentsDiscarded GET,
            assemblingSegmentsDiscarded GET,
            errorReportsReceived GET,
            pDUDiscards GET,
            congestionDiscards GET,
            maximumLifetime GET-REPLACE;
        ATTRIBUTE GROUPS
            "GMI":counters
                "DMI":octetsSentCounter
                "DMI":octetsReceivedCounter
                segmentsReceived
                segmentsDiscarded
```

--`,,```,,,,````-`-`,,`,,`,`,,`---

Copyright International Organization for Standardization
Provided by IHS under license with ISO
No reproduction or networking permitted without license from IHS
Not for Resale

```
                assemblingSegmentsDiscarded
                errorReportsReceived
                pDUDiscards
                congestionDiscards;
        NOTIFICATIONS
            "DMI":communicationsAlarm
                notificationPDUHeader;
REGISTERED AS { NLM.poi cLNS8473-P (20) };

cLNSChecksum-P PACKAGE
        BEHAVIOUR cLNSChecksum-P-B BEHAVIOUR
            DEFINED AS !When present checksum generation is controlled by
                the enableChecksum attribute.!;;
        ATTRIBUTES
            enableChecksum REPLACE-WITH-DEFAULT
                DEFAULT VALUE NLM.false
                GET-REPLACE;
REGISTERED AS { NLM.poi cLNSChecksum-P (1) };

-- Behaviours

cLNS8473PImportedCounters-B BEHAVIOUR
        DEFINED AS !The cLNS8473-P package imports octetsSentCounter and octetsReceivedCounter from
            ISO/IEC 10165-2. They are used to count the number of octets of data transmitted or received by
            the local network entity in ITU-T Rec. X.233 | ISO/IEC 8473-1 Data PDUs. (i.e. those which which
            have a source or
            destination N-Address, respectively, which corresponds to that one of those of the local network
            entity.)!;

cLNS8473PImportedNotifications-B BEHAVIOUR
        DEFINED AS !The cLNS8473-P package imports the communicationsAlarm notification from
            Rec. 721 | ISO/IEC 10165-2.
            It is used to report the following cLNS managed object events.
            pDUDiscard:
                Generated when a data NPDU is discarded due
                to any of the reasons specified in ITU-T Rec. X.233 | ISO/IEC 8473-1 Table 7, with
                the exception of 'PDU Discarded due to Congestion' The header of the PDU in error
                shall be reported as a parameter in the additionalInformation field of the
                communicationsAlarm, using the notificationPDUHeader parameters.
                The significance sub-parameter of each item of additionalInformation
                shall be set to the value 'False' (i.e. not significant) so that a managing
                system receiving the event report will be less likely to reject it.
                The value NLM.pDUDiscard and that corresponding to the Reason For Discard
                shall both be reported in the specificProblems parameter.
                The probableCause shall be set to NLM.communicationsProtocolError.
                The perceivedSeverity shall be set to 'Minor'. A subsequent communicationsAlarm
                with a perceivedSeverity value of 'Cleared' shall not be generated.
                No other fields or parameters shall be used, with the exception of further
                parameters in the AdditionalInformation field.
                A PDU which does not contain one of the protocol identifiers defined
                in ITU-T Rec. X.233 | ISO/IEC 8473-1 shall not cause this event.
                A PDU with a protocol ID 1000 0001 shall not cause this event if it does not also contain
                the Version/Protocol Identifier extension in 7.2.4 of ITU-T Rec. X.233 | ISO/IEC 8473-1.
                If an error report PDU is generated, the PDU header and Discard Reason in the error
                report shall be the same as those in the corresponding notification.!
        ;

operationalSystemTypeIV-B BEHAVIOUR
        DEFINED AS !If the MO is created by management operation (using the
            cLNS-networkEntity-Management or
            cONS-networkEntity-Management name binding), the initial value of the
            operationalSystemType attribute shall be specified in the CMIP create. Otherwise,
            the value shall be determined in an implementation specific manner. The value
            shall be one of those present in the systemTypes attribute of the
            superior Network Entity MO.!;

-- Name Bindings

cLNS-networkEntity-Management NAME BINDING
        SUBORDINATE OBJECT CLASS cLNS AND SUBCLASSES;
```

--`,,```,,,,````-`-`,,`,,`,`,,`---

Copyright International Organization for Standardization
Provided by IHS under license with ISO
No reproduction or networking permitted without license from IHS

Not for Resale

```
        NAMED BY
            SUPERIOR OBJECT CLASS networkEntity AND SUBCLASSES;
            WITH ATTRIBUTE "GMI":clProtocolMachineId;
        BEHAVIOUR cLNS-networkEntity-Management-B BEHAVIOUR
            DEFINED AS !The name binding that applies when the cLNS managed object
                can be created and deleted by management.!;;
        CREATE;
        DELETE ONLY-IF-NO-CONTAINED-OBJECTS;
REGISTERED AS { NLM.nboi cLNS-networkEntity-Management (3) };

cLNS-networkEntity-Automatic NAME BINDING
        SUBORDINATE OBJECT CLASS cLNS AND SUBCLASSES;
        NAMED BY
            SUPERIOR OBJECT CLASS networkEntity AND SUBCLASSES;
            WITH ATTRIBUTE "GMI":clProtocolMachineId;
        BEHAVIOUR cLNS-networkEntity-Automatic-B BEHAVIOUR
            DEFINED AS !The name binding that applies when the cLNS managed object
                cannot be created or deleted by management.!;;
REGISTERED AS { NLM.nboi cLNS-networkEntity-Automatic (16) };

-- Attributes

assemblingSegmentsDiscarded ATTRIBUTE
        DERIVED FROM "GMI":nonWrapping64BitCounter;
        BEHAVIOUR assemblingSegmentsDiscarded-B BEHAVIOUR
            DEFINED AS !Counter of segments discarded due to reassembly time expiry.
                This is the number of data and error report NPDUs discarded
                due to reassembly time expiry.!;;
REGISTERED AS { NLM.aoi assemblingSegmentsDiscarded (8) };

congestionDiscards ATTRIBUTE
        DERIVED FROM "GMI":nonWrapping64BitCounter;
        BEHAVIOUR congestionDiscards-B BEHAVIOUR
            DEFINED AS !Counter of PDUs discarded due to congestion.
                This is the number of data or error report PDUs discarded due to congestion.
                This counter is incremented irrespective of the setting of the Error Report bit in the
                received PDU.!;;
REGISTERED AS { NLM.aoi congestionDiscards (11) };

enableChecksum ATTRIBUTE
        WITH ATTRIBUTE SYNTAX NLM.Boolean;
        MATCHES FOR EQUALITY;
        BEHAVIOUR enableChecksum-B BEHAVIOUR
            DEFINED AS !When True, the generation of checksums is enabled.!;;
REGISTERED AS { NLM.aoi enableChecksum (4) };

errorReportsReceived ATTRIBUTE
        DERIVED FROM "GMI":nonWrapping64BitCounter;
        BEHAVIOUR errorReportsReceived-B BEHAVIOUR
            DEFINED AS !Counter of received error reports.
                This is the number of error report NPDUs received which were addressed to the local
                network entity.!;;
REGISTERED AS { NLM.aoi errorReportsReceived (9) };

maximumLifetime ATTRIBUTE
        WITH ATTRIBUTE SYNTAX NLM.Lifetime;
        MATCHES FOR EQUALITY, ORDERING;
        BEHAVIOUR maximumLifetime-B BEHAVIOUR
            DEFINED AS !Maximum PDU lifetime (in half seconds).
                This attribute controls the maximum value (in half seconds) which may be placed
                in the lifetime field of any ITU-T Rec. X.233 | ISO/IEC 8473-1 data or error report PDU
                generated by the local network entity.
                It does not affect the lifetime field of any PDUs not generated by this network entity,
                for example those relayed by this system acting as an Intermediate System. PDUs generated
                by the local network entity are permitted to have a lower value of lifetime field than this
                attribute, but shall not have a larger value. The means by which the value of the lifetime field
                is determined for an individual PDU is outside the scope of this Specification, provided that it
                meets the above constraints.!;;
REGISTERED AS { NLM.aoi maximumLifetime (102) };
```


Copyright International Organization for Standardization
Provided by IHS under license with ISO
No reproduction or networking permitted without license from IHS
Not for Resale

```
operationalSystemType ATTRIBUTE
        WITH ATTRIBUTE SYNTAX NLM.SystemType;
        MATCHES FOR EQUALITY;
        BEHAVIOUR operationalSystemType-B BEHAVIOUR
            DEFINED AS !The system role in which this instance is operating.
            A value of ES indicates that the system
            shall perform no forwarding operations upon non-local PDUs.
            A value of IS indicates that the system is permitted to perform
            forwarding operations, but the decision to forward individual PDUs,
            or not to forward them, shall be taken on the basis of the available
            routing information.!;;
REGISTERED AS { NLM.aoi operationalSystemType (109) };

pDUDiscards ATTRIBUTE
        DERIVED FROM "GMI":nonWrapping64BitCounter;
        BEHAVIOUR pDUDiscards-B BEHAVIOUR
            DEFINED AS !Counter of PDUs discarded (except for congestion).
                This is the number of data or error report PDUs discarded for any of the reasons
                specified in ITU-T Rec. X.233 | ISO/IEC 8473-1 Table 7 with the exception of 'PDU discarded
                due to congestion'.
                This counter is incremented irrespective of the setting of the Error Report bit in the
                received PDU.!;;
                -- NOTE – This counter is therefore a count of the number of
                -- communicationsAlarm notifications with a specificProblem value of
                -- pDUDiscard generated (as opposed to CMIP events,
                -- may be suppressed) as required by GDMO subclause 9.8.5 (SC21 N4852).
REGISTERED AS { NLM.aoi pDUDiscards (10) };

segmentsDiscarded ATTRIBUTE
        DERIVED FROM "GMI":nonWrapping64BitCounter;
        BEHAVIOUR segmentsDiscarded-B BEHAVIOUR
            DEFINED AS !Counter of segments discarded.
                This is the number of data and error report NPDUs discarded
                without being delivered to a Network Service user or forwarded. This includes
                segments discarded for any reason except reassembly time expiry.!;;
REGISTERED AS { NLM.aoi segmentsDiscarded (7) };

segmentsReceived ATTRIBUTE
        DERIVED FROM "GMI":nonWrapping64BitCounter;
        BEHAVIOUR segmentsReceived-B BEHAVIOUR
            DEFINED AS !Counter of segments received.
                This is the number of data and error report NPDUs received
                prior to reassembly, including those which may subsequently be discarded.!;;
REGISTERED AS { NLM.aoi segmentsReceived (6) };

segmentsSent ATTRIBUTE
        DERIVED FROM "GMI":nonWrapping64BitCounter;
        BEHAVIOUR segmentsSent-B BEHAVIOUR
            DEFINED AS !Counter of segments Sent.
                This is the number of data and error report NPDUs sent
                after segmentation processing occurs.!;;
REGISTERED AS { NLM.aoi segmentsSent (118) };

supportedProtocols ATTRIBUTE
        WITH ATTRIBUTE SYNTAX NLM.SupportedProtocols;
        MATCHES FOR EQUALITY, SET-COMPARISON, SET-INTERSECTION;
        BEHAVIOUR supportedProtocols-B BEHAVIOUR
            DEFINED AS !The set of Connectionless Network protocols supported
                by this instance of the cLNS protocol machine, expressed except
                where otherwise indicated (for example because there are more
                than one protocol described in a single International Standard)
                as the registered object identifiers of the relevant
                International Standard. The operation of a particular protocol
                over a particular linkage is determined by the linkage
                operationalProtocols attribute. The value of the
                supportedProtocols attribute is determined by the implementation.!;;
REGISTERED AS { NLM.aoi supportedProtocols (110) };

-- Parameters
```


Copyright International Organization for Standardization
Provided by IHS under license with ISO
No reproduction or networking permitted without license from IHS
Not for Resale

```
notificationPDUHeader PARAMETER
        CONTEXT EVENT-INFO;
        WITH SYNTAX NLM.OctetString;
        BEHAVIOUR notificationPDUHeader-B BEHAVIOUR
            DEFINED AS !The header of the data NPDU header which caused this event.!;;
REGISTERED AS { NLM.proi notificationPDUHeader (1) };
```

5.7 The linkage managed object

```
-- Linkage Managed Object
--
-- There is one of these MOs associated with each separate provision
-- of the underlying service to the superior protocol machine.
-- Its definition permits it to be created and deleted explicitly by
-- management operation, but in some systems it will exist inherently
-- and neither creation nor deletion by management operation will be
-- possible. Name bindings are defined for both cases.
--
-- When the linkage is operable, the operationalState shall
-- have the value 'enabled'; otherwise it shall have the value 'disabled'.
-- Transitions of operationalState shall be reported using the
-- stateChange notification. A linkage MO may be created in the
-- 'enabled' operational state.

linkage MANAGED OBJECT CLASS
        DERIVED FROM "DMI":top;
        CHARACTERIZED BY linkage-P PACKAGE
            BEHAVIOUR commonCreationDeletion-B,
                      commonStateChange-B;
            ATTRIBUTES
                linkageId GET,
                "DMI":operationalState GET,
                "DMI":administrativeState GET-REPLACE,
                sN-ServiceProvider
                    INITIAL VALUE DERIVATION RULE sN-ServiceProviderIV-B
                    GET,
                sN-SAP GET,
                operationalProtocols
                    INITIAL VALUE DERIVATION RULE operationalProtocolIV-B
                    GET;
            ATTRIBUTE GROUPS
                "DMI":state
                    "DMI":administrativeState
                    "DMI":operationalState;
            ACTIONS
                "GMI":activate,
                "GMI":deactivate;
            NOTIFICATIONS
                "DMI":stateChange,
                "DMI":objectCreation,
                "DMI":objectDeletion;
            ;;
        CONDITIONAL PACKAGES
            linkage-ISO9542IS-P
                PRESENT IF !support for ISO 9542 operating as an IS!,
            linkage-ISO9542ES-P
                PRESENT IF !support for ISO 9542 operating as an ES!,
            linkage-ISO9542Checksum-P
                PRESENT IF !support for ISO 9542 PDU Header Checksum Generation function!,
            linkageInitialMinimumTimer-P
                PRESENT IF !support for the initial minimum timer attribute of the ITU-T Rec. X.233 |
                    ISO/IEC 8473-1SNDCF when operating ITU-T Rec. X.233 | ISO/IEC 8473-1 over
                    an ISO/IEC 8208 or ITU-T Rec.X.25 or CO Datalink Service!,
            linkageReserveTimer-P
                PRESENT IF !support for the reserve timer attribute of the ITU-T Rec. X.233 | ISO/IEC 8473-1
                SNDCF when operating ITU-T Rec. X.233 | ISO/IEC 8473-1 over an ISO/IEC 8208 or ITU-T
                Rec. X.25 or CO Datalink Service!,
```


Copyright International Organization for Standardization
Provided by IHS under license with ISO
No reproduction or networking permitted without license from IHS
Not for Resale

```
            linkageIdleTimer-P
                PRESENT IF !support for the idle timer attribute of the ITU-T Rec. X.233 | ISO/IEC 8473-1
                SNDCF when operating ITU-T Rec. X.233 | ISO/IEC 8473-1 over an ISO/IEC 8208 or ITU-T Rec.
                X.25 or CO Datalink Service!,
            linkage-ISO8473-ISO8208SNDCF-P
                PRESENT IF !operating ITU-T Rec. X.233 | ISO/IEC 8473-1 over ISO/IEC 8208 or
                ITU-T Rec. X.25!,
            linkageCODLService-P
                PRESENT IF !operating ITU-T Rec. X.233 | ISO/IEC 8473-1 over the CO Datalink Service!,
-- The following packages are associated with ISO/IEC 10589
            "ISO/IEC 10589":linkageISISBasic-P
                PRESENT IF !the system is an ISO 10589 IS!,
            "ISO/IEC 10589":linkageISISAuthentication-P
                PRESENT IF !the authentication procedures are implemented
                    on an ISO 10589 IS!,
            "ISO/IEC 10589":linkageISISBroadcast-P
                PRESENT IF !the linkage is a broadcast circuit
                    on an ISO 10589 IS!,
            "ISO/IEC 10589":linkageISISDACallEstablishmentMetricIncrement-P
                PRESENT IF !the linkage is a DA Circuit and support is implemented for
                    call establishment metric increment values greater than zero on an
                    ISO/IEC 10589 IS!,
            "ISO/IEC 10589":linkageISISPtToPt-P
                PRESENT IF !the linkage is a point to point circuit
                    on an ISO 10589 IS!,
            "ISO/IEC 10589":linkageISISStatic-P
                PRESENT IF !the linkage is an X.25 static circuit (IN or OUT)
                    on an ISO 10589 IS!,
            "ISO/IEC 10589":linkageISISLevel2-P
                PRESENT IF !the system is an ISO/IEC 10589 level 2 IS!,
            "ISO/IEC 10589":linkageISISlevel2Broadcast-P
                PRESENT IF !the linkage is a broadcast circuit on an ISO 10589 level 2 IS!;
REGISTERED AS { NLM.moi linkage (23) };

-- Packages

linkageCODLService-P PACKAGE
        BEHAVIOUR linkageCODLService-P-B BEHAVIOUR
            DEFINED AS !Controls the operation of CO Datalink as an SNDCF for ITU-T Rec. X.233 | ISO/IEC
                8473-1.!;;
        ATTRIBUTES
            callsPlaced GET,
            callsFailed GET;
        ATTRIBUTE GROUPS
            "GMI":counters
                callsPlaced
                callsFailed;
REGISTERED AS { NLM.poi linkageCODLService-P (9) };

linkageIdleTimer-P PACKAGE
        BEHAVIOUR linkageIdleTimer-P-B BEHAVIOUR
            DEFINED AS !Controls the ability, when implemented, of an ISO/IEC 8208 or ITU-T Rec. X.25 or CO
                Datalink SNDCF
                for ITU-T Rec. X.233 | ISO/IEC 8473-1 to close an established Virtual Call when it is idle.!;;
        ATTRIBUTES
            idleTimer REPLACE-WITH-DEFAULT
                GET-REPLACE;
REGISTERED AS { NLM.poi linkageIdleTimer-P (5) };

linkageInitialMinimumTimer-P PACKAGE
        BEHAVIOUR linkageInitialMinimumTimer-P-B BEHAVIOUR
            DEFINED AS !Controls the ability, when implemented, of an ISO/IEC 8208 or ITU-T Rec. X.25 or CO
                Datalink SNDCF for ITU-T Rec. X.233 | ISO/IEC 8473-1 to close an established Virtual Call
                when it is idle, but only after a minimum time after its establishment.!;;
        ATTRIBUTES
            initialMinimumTimer REPLACE-WITH-DEFAULT
                GET-REPLACE;
REGISTERED AS { NLM.poi linkageInitialMinimumTimer-P (7) };
```


Copyright International Organization for Standardization
Provided by IHS under license with ISO
No reproduction or networking permitted without license from IHS
Not for Resale

```
linkage-ISO8473-ISO8208SNDCF-P  PACKAGE
        BEHAVIOUR linkage-ISO8473-ISO8208SNDCF-P-B BEHAVIOUR
            DEFINED AS !Controls the operation of ISO/IEC 8208 or ITU-T Rec. X.25 as an SNDCF for
                ITU-T Rec. X.233 | ISO/IEC 8473-1.!;;
        ATTRIBUTES
            callsPlaced GET,
            callsFailed GET;
        ATTRIBUTE GROUPS
            "GMI":counters
                callsPlaced
                callsFailed;
REGISTERED AS { NLM.poi linkage-ISO8473-ISO8208SNDCF-P (4) };

linkage-ISO9542Checksum-P PACKAGE
        BEHAVIOUR linkage-ISO9542Checksum-P-B BEHAVIOUR
            DEFINED AS !When present, checksum generation is controlled
                by the enableChecksum attribute.!;;
        ATTRIBUTES
            enableChecksum REPLACE-WITH-DEFAULT
                DEFAULT VALUE NLM.false
                GET-REPLACE;
REGISTERED AS { NLM.poi linkage-ISO9542Checksum-P(17) };

linkage-ISO9542ES-P PACKAGE
        BEHAVIOUR
            linkage-ISO9542ES-P-B BEHAVIOUR
                DEFINED AS !Controls the operation of ISO 9542 on an End System.!;,
            linkage-ISO9542ImportedAlarmNotifications-B,
            linkage-ISO9542ISReachabilityChange-B,
            linkage-ISO9542ESReachabilityChange-B;
        ATTRIBUTES
            iSO9542OperationalSubsets GET-REPLACE,
            holdingTimerMultiplier
                REPLACE-WITH-DEFAULT
                DEFAULT VALUE NLM.holdingTimerMultiplierDefault
                PERMITTED VALUES NLM.HoldingTimerMultiplierPermitted
                REQUIRED VALUES NLM.HoldingTimerMultiplierRequired
                GET-REPLACE,
            manualISSNPAAddress REPLACE-WITH-DEFAULT
                GET-REPLACE ADD-REMOVE,
            defaultESConfigTimer REPLACE-WITH-DEFAULT
                GET-REPLACE,
            activeESConfigTimer GET,
            iSReachabilityChanges GET,
            invalid9542PDUs GET;
        ATTRIBUTE GROUPS
            "GMI":counters
                iSReachabilityChanges
                invalid9542PDUs;
        NOTIFICATIONS
            "DMI":communicationsAlarm,
            "GMI":communicationsInformation
                reachabilityChange;
REGISTERED AS { NLM.poi linkage-ISO9542ES-P (21) };

linkage-ISO9542IS-P PACKAGE
        BEHAVIOUR linkage-ISO9542IS-P-B BEHAVIOUR
            DEFINED AS !Controls the operation of ISO 9542 on an Intermediate System.!;,
            linkage-ISO9542ImportedAlarmNotifications-B,
            linkage-ISO9542ISReachabilityChange-B,
            linkage-ISO9542ESReachabilityChange-B;
        ATTRIBUTES
            iSO9542OperationalSubsets GET-REPLACE,
            holdingTimerMultiplier
            REPLACE-WITH-DEFAULT
                DEFAULT VALUE NLM.holdingTimerMultiplierDefault
                PERMITTED VALUES NLM.HoldingTimerMultiplierPermitted
                REQUIRED VALUES NLM.HoldingTimerMultiplierRequired
                GET-REPLACE,
```


Copyright International Organization for Standardization
Provided by IHS under license with ISO
No reproduction or networking permitted without license from IHS
Not for Resale

```
            iSConfigurationTimer REPLACE-WITH-DEFAULT
                DEFAULT VALUE NLM.iSConfigurationTimerDefault
                GET-REPLACE,
            suggestedESConfigurationTimer REPLACE-WITH-DEFAULT
                DEFAULT VALUE NLM.suggestedESConfigurationTimerDefault
                GET-REPLACE,
            redirectHoldingTime
                REPLACE-WITH-DEFAULT
                DEFAULT VALUE NLM.redirectHoldingTime-Default
                PERMITTED VALUES NLM.RedirectHoldingTime-Permitted
                GET-REPLACE,
            eSReachabilityChanges GET,
            invalid9542PDUs GET;
        ATTRIBUTE GROUPS
            "GMI":counters
                eSReachabilityChanges
                invalid9542PDUs;
        NOTIFICATIONS
            "DMI":communicationsAlarm,
            "GMI":communicationsInformation
                reachabilityChange;
REGISTERED AS { NLM.poi linkage-ISO9542IS-P (22) };

linkageReserveTimer-P PACKAGE
        BEHAVIOUR linkageReserveTimer-P-B BEHAVIOUR
            DEFINED AS !Controls the ability, when implemented, of an ISO/IEC 8208 or ITU-T Rec. X.25 or
            CO Datalink SNDCF
                for ITU-T Rec. X.233 | ISO/IEC 8473-1 to close an established Virtual Call when it is idle, but
                retain resources for its
                re-establishment.!;;
        ATTRIBUTES
            reserveTimer REPLACE-WITH-DEFAULT
                GET-REPLACE;
REGISTERED AS { NLM.poi linkageReserveTimer-P (6) };

-- Behaviours

linkage-ISO9542ISReachabilityChange-B BEHAVIOUR
        DEFINED AS
            !This package imports the communicationsInformation notification
            from Rec. X.723 | ISO/IEC 10165-5.
            It is used to report the following events.
            iSReachabilityChange:
                Generated when an ES or IS detects a change
                in the reachability of a neighbouring IS.
                The value NLM.iSReachabilityChange shall be reported in the
                informationType field.
                The new State, NET of the IS concerned, snpaAddress (where
                available) and the reason for the change shall be reported
                in the informationData field using the reachabilityChange
                PARAMETER.!;

linkage-ISO9542ESReachabilityChange-B BEHAVIOUR
        DEFINED AS
            !This package imports the communicationsInformation notification
            from Rec. X.723 | ISO/IEC 10165-5.
            It is used to report the following events.

            eSReachabilityChange:

                Generated when an ES or IS detects a change
                in the reachability of a neighboring ES.
                The value NLM.eSReachabilityChange shall be reported in the
                informationType field.
                The new State, set of NSAPAddresses of the IS concerned,
                the snpaAddress (where available) and the reason for
                the change shall be reported in the informationData field
                using the reachabilityChange PARAMETER.!;
```

--`,,```,,,,````-`-`,,`,,`,`,,`---

Copyright International Organization for Standardization
Provided by IHS under license with ISO
No reproduction or networking permitted without license from IHS
Not for Resale

```
linkage-ISO9542ImportedAlarmNotifications-B BEHAVIOUR
        DEFINED AS !This package imports the communicationsAlarm notification
            from Rec. X.721 (1992) | ISO/IEC 10165-2.
            It is used to report the following events.

            invalid9542PDU:

                Generated when an ISO 9542 PDU is received which is discarded
                as result of the PDU Header Error Detection or Protocol Error Processing Functions
                specified in ISO 9542.
                The significance sub-parameter of each item of additionalInformation
                shall be set to the value 'False' (i.e. not significant) so that a managing
                system receiving the event report will be less likely to reject it.
                The value NLM.iSO9542PDUDiscard shall be reported in the specificProblems parameter.
                The probableCause shall be set to NLM.communicationsProtocolError.
                The perceivedSeverity shall be set to 'Minor'. A subsequent communicationsAlarm
                with a perceivedSeverity value of 'Cleared' shall not be generated.
                No other fields or parameters shall be used, with the exception of further
                parameters in the AdditionalInformation field.!;

operationalProtocolIV-B BEHAVIOUR
        DEFINED AS !If the linkage MO is created by management operation (using the
            linkage-cLNS-Management name binding), the initial value of the
            operationalProtocols attribute shall be specified in the CMIP create.
            Otherwise, the value shall be determined in an implementation specific manner.!;

sN-ServiceProviderIV-B BEHAVIOUR
        DEFINED AS !If the linkage MO is created by management operation (using the
            linkage-cONS-Management or linkage-cONS-Management name bindings),
            the initial value of the sN-ServiceProvider attribute shall be specified in the CMIP create.
            Otherwise, the value shall be determined in an implementation specific manner.!;

-- Name Bindings

linkage-cLNS-Management NAME BINDING
        SUBORDINATE OBJECT CLASS linkage AND SUBCLASSES;
        NAMED BY
            SUPERIOR OBJECT CLASS cLNS AND SUBCLASSES;
            WITH ATTRIBUTE linkageId;
        BEHAVIOUR sN-ServiceProviderIV-B, operationalProtocolIV-B,
            linkage-cLNS-Management-B BEHAVIOUR
            DEFINED AS !The name binding which applies when the linkage managed object
                can be created and deleted by management as a subordinate object of the cLNS
                managed object class.!;;
        CREATE WITH-REFERENCE-OBJECT;
        DELETE;
REGISTERED AS { NLM.nboi linkage-cLNS-Management (20) };

linkage-cONS-Management NAME BINDING
        SUBORDINATE OBJECT CLASS linkage AND SUBCLASSES;
        NAMED BY
            SUPERIOR OBJECT CLASS cONS AND SUBCLASSES;
            WITH ATTRIBUTE linkageId;
        BEHAVIOUR sN-ServiceProviderIV-B,
            linkage-cONS-Management-B BEHAVIOUR
            DEFINED AS !The name binding which applies when the linkage managed object
                can be created and deleted by management as a subordinate object of the cONS
                managed object class.!;;
        CREATE WITH-REFERENCE-OBJECT;
        DELETE;
REGISTERED AS { NLM.nboi linkage-cONS-Management (21) };

linkage-cLNS-Automatic NAME BINDING
        SUBORDINATE OBJECT CLASS linkage AND SUBCLASSES;
        NAMED BY
            SUPERIOR OBJECT CLASS cLNS AND SUBCLASSES;
            WITH ATTRIBUTE linkageId;
        BEHAVIOUR sN-ServiceProviderIV-B, operationalProtocolIV-B,
            linkage-cLNS-Automatic-B BEHAVIOUR
```


Copyright International Organization for Standardization
Provided by IHS under license with ISO
No reproduction or networking permitted without license from IHS
Not for Resale

```
            DEFINED AS !The name binding which applies when the linkage managed object
                cannot be created and deleted by management as a subordinate object of the cLNS
                managed object class.!;;
REGISTERED AS { NLM.nboi linkage-cLNS-Automatic (22) };

linkage-cONS-Automatic NAME BINDING
        SUBORDINATE OBJECT CLASS linkage AND SUBCLASSES;
        NAMED BY
            SUPERIOR OBJECT CLASS cONS AND SUBCLASSES;
            WITH ATTRIBUTE linkageId;
        BEHAVIOUR sN-ServiceProviderIV-B,
            linkage-cONS-Automatic-B BEHAVIOUR
            DEFINED AS !The name binding which applies when the linkage managed object
                cannot be created and deleted by management as a subordinate object of the cONS
                managed object class.!;;
REGISTERED AS { NLM.nboi linkage-cONS-Automatic (23) };

-- Attributes

activeESConfigTimer ATTRIBUTE
        DERIVED FROM "GMI":timer;
        BEHAVIOUR activeESConfigTimer-B BEHAVIOUR
            DEFINED AS !Currently active value for the ISO 9542 ES configuration timer
                in seconds.!;;
REGISTERED AS { NLM.aoi activeESConfigTimer (22) };

callsFailed ATTRIBUTE
        DERIVED FROM "GMI":nonWrapping64BitCounter;
        BEHAVIOUR callsFailed-B BEHAVIOUR
            DEFINED AS !Counter of the number of X.25 call failures
                while attempting establishment by the SNDCF.!;;
REGISTERED AS { NLM.aoi callsFailed (30) };

callsPlaced ATTRIBUTE
        DERIVED FROM "GMI":nonWrapping64BitCounter;
        BEHAVIOUR callsPlaced-B BEHAVIOUR
            DEFINED AS !Counter of the number of X.25 VCs successfully established
                by the SNDCF.!;;
REGISTERED AS { NLM.aoi callsPlaced (29) };

defaultESConfigTimer ATTRIBUTE
        DERIVED FROM "GMI":timer;
        BEHAVIOUR resettingTimer-B, defaultESConfigTimer-B BEHAVIOUR
            DEFINED AS !Default value for the ISO 9542 ES configuration timer
                in seconds. This value is used when the ES has not received,
                or has not chosen to accept, a suggested configuration timer
                value from an Intermediate System.!;;
REGISTERED AS { NLM.aoi defaultESConfigTimer (21) };

eSReachabilityChanges ATTRIBUTE
        DERIVED FROM "GMI":nonWrapping64BitCounter;
        BEHAVIOUR eSReachabilityChanges-B BEHAVIOUR
            DEFINED AS !Count of the number of changes in reachability of End Systems
                from this system.!;;
REGISTERED AS { NLM.aoi eSReachabilityChanges (27) };

holdingTimerMultiplier ATTRIBUTE
        WITH ATTRIBUTE SYNTAX NLM.Integer;
        BEHAVIOUR holdingTimerMultiplier-B BEHAVIOUR
            DEFINED AS !The factor to derive holding timer from configuration timer.
                This value, when multiplied by a configuration timer yields the value of
                the holding timer parameter issued with configuration information. The semantics of
                this parameter are such that it is permissible to also add a delta value to the result to
                compensate for possible delays and imprecision of timers. The result of the calculation
                is truncated, upon overflow, to the maximum value for the parameter permitted by the
                protocol (65535).!;;
REGISTERED AS { NLM.aoi holdingTimerMultiplier (20) };

idleTimer ATTRIBUTE
        DERIVED FROM "GMI":timer;
        BEHAVIOUR idleTimer-B BEHAVIOUR
```


Copyright International Organization for Standardization
Provided by IHS under license with ISO
No reproduction or networking permitted without license from IHS
Not for Resale

```
            DEFINED AS !Time in seconds before release of an idle call.
                This timer determines the interval (in seconds) for which a call is
                permitted to remain idle (i.e. no data traffic in either direction) before being
                released by the SNDCF.!;;
REGISTERED AS { NLM.aoi idleTimer (31) };

initialMinimumTimer ATTRIBUTE
        DERIVED FROM "GMI":timer;
        BEHAVIOUR initialMinimumTimer-B BEHAVIOUR
            DEFINED AS !Minimum time in seconds to retain call after establishment.
                This timer determines the interval (in seconds) that a call shall remain
                connected after being established, irrespective of traffic. (NOTE – This should be
                set small enough so that the call is cleared before the start of the next charging interval.)!;;
REGISTERED AS { NLM.aoi initialMinimumTimer (33) };

invalid9542PDUs ATTRIBUTE
        DERIVED FROM "GMI":nonWrapping64BitCounter;
        BEHAVIOUR invalid9542PDUs-B BEHAVIOUR
            DEFINED AS !Counter of invalid 9542 PDUs received.
                This is the number of ISO 9542 PDUs received which are discarded
                as a result of the PDU Header Error Detection or Protocol Error Processing Functions
                specified in ISO 9542.!;;
                -- NOTE – This counter is therefore a count of the number of
                -- communicationsAlarm notifications with a specificProblem value of
                -- NLM.iSO9542PDUDiscard generated.
REGISTERED AS { NLM.aoi invalid9542PDUs (101) };

iSConfigurationTimer ATTRIBUTE
        DERIVED FROM "GMI":timer;
        BEHAVIOUR resettingTimer-B, iSConfigurationTimer-B BEHAVIOUR
            DEFINED AS !Value in seconds for the ISO 9542 IS configuration timer.
                It is used to determine how often an IS reports configuration information to ESs.!;;
REGISTERED AS { NLM.aoi iSConfigurationTimer (24) };

iSO9542OperationalSubsets ATTRIBUTE
        WITH ATTRIBUTE SYNTAX NLM.ISO9542Subsets;
        MATCHES FOR EQUALITY;
        BEHAVIOUR iSO9542OperationalSubsets-B BEHAVIOUR
            DEFINED AS !The set of ISO 9542 subsets operational on this linkage.!;;
REGISTERED AS { NLM.aoi iSO9542OperationalSubsets (115) };

iSReachabilityChanges ATTRIBUTE
        DERIVED FROM "GMI":nonWrapping64BitCounter;
        BEHAVIOUR iSReachabilityChanges-B BEHAVIOUR
            DEFINED AS !Counter of the number of changes in reachability of Intermediate Systems
                from this system.!;;
REGISTERED AS { NLM.aoi iSReachabilityChanges (23) };

linkageId ATTRIBUTE
        WITH ATTRIBUTE SYNTAX NLM.GraphicStringBase;
        MATCHES FOR EQUALITY, SUBSTRINGS;
        BEHAVIOUR linkageId-B BEHAVIOUR
            DEFINED AS !The naming attribute of the linkage MO instance.!;;
REGISTERED AS { NLM.aoi linkageId (17) };

manualISSNPAAddress ATTRIBUTE
        WITH ATTRIBUTE SYNTAX NLM.ManualISSNPAAddress;
        MATCHES FOR SET-COMPARISON, SET-INTERSECTION;
        BEHAVIOUR manualISSNPAAddress-B BEHAVIOUR
            DEFINED AS !The set of SNPA Addresses to which calls associated with the SNDCF are to be
                established in the absence of any other information. The maximum set cardinality shall be
                implementation specific. An attempt to set the value of an element
                of this set to a type of SNPAAddress which is not supported by this
                linkage shall result in a failure of the SET operation.!;;
REGISTERED AS { NLM.aoi manualISSNPAAddress (28) };

operationalProtocols ATTRIBUTE
        WITH ATTRIBUTE SYNTAX NLM.SupportedProtocols;
        MATCHES FOR EQUALITY, SET-COMPARISON, SET-INTERSECTION;
        BEHAVIOUR operationalProtocols-B BEHAVIOUR
```


Copyright International Organization for Standardization
Provided by IHS under license with ISO
No reproduction or networking permitted without license from IHS
Not for Resale

```
            DEFINED AS !The set of network layer protocols supported
                by this instance of the linkage MO, expressed
                as the registered object identifiers of the relevant
                International Standard.!;;
REGISTERED AS { NLM.aoi operationalProtocols (111) };

redirectHoldingTime ATTRIBUTE

        WITH ATTRIBUTE SYNTAX NLM.RedirectHoldingTime;
        MATCHES FOR EQUALITY, ORDERING;
        BEHAVIOUR redirectHoldingTime-B BEHAVIOUR
            DEFINED AS !The holding time (in seconds) to be specified in Redirect PDUs
                generated by this system.!;;
REGISTERED AS { NLM.aoi redirectHoldingTime (26) };

reserveTimer ATTRIBUTE

        DERIVED FROM "GMI":timer;
        BEHAVIOUR reserveTimer-B BEHAVIOUR
            DEFINED AS !Time in seconds to reserve resources for call re-establishment.
                This timer determines the interval (in seconds) for which an attempt
                shall be made to retain those resources, as determined by the implementation,
                whose retention will increase the probability of successful re-establishment of an idled VC.!;;
REGISTERED AS { NLM.aoi reserveTimer (32) };

sN-SAP ATTRIBUTE

        WITH ATTRIBUTE SYNTAX NLM.LocalDistinguishedName;
        MATCHES FOR EQUALITY;
        BEHAVIOUR sN-SAP-B BEHAVIOUR
            DEFINED AS !Distinguished name of the service provider SAP MO
                (if present).
                This is obtained via an internal interface when the linkage is
                enabled. The sN-SAP may be a relationship to an SAP MO in the
                Datalink Layer, or it may be a relationship to another Managed Object
                within the Network Layer which is not an SAP MO.
                For example, when operating ITU-T Rec. X.233 | ISO/IEC 8473-1 over the ISO/IEC 8208 or
                ITU-T Rec. X.25 SNDCF,
                it is a relationship to the same x25PLE-DTE MO which is pointed to by the
                sN-ServiceProvider Attribute.!;;
REGISTERED AS { NLM.aoi sN-SAP (18) };

sN-ServiceProvider ATTRIBUTE

        WITH ATTRIBUTE SYNTAX NLM.LocalDistinguishedName;
        MATCHES FOR EQUALITY;
        BEHAVIOUR sN-ServiceProvider-B BEHAVIOUR
            DEFINED AS !Distinguished name of the SN service provider MO.
                This attribute identifies the subnetwork entity to be used to support the linkage,
                when enabled. The subnetwork service provider may be in the Datalink Layer,
                or it may be in the Network Layer
                (for example when operating ITU-T Rec. X.233 | ISO/IEC 8473-1 over the ISO/IEC 8208 or
                ITU-T Rec. X.25 SNDCF).!;;
REGISTERED AS { NLM.aoi sN-ServiceProvider (19) };

suggestedESConfigurationTimer ATTRIBUTE

        DERIVED FROM "GMI":timer;
        BEHAVIOUR resettingTimer-B, suggestedESConfigurationTimer-B BEHAVIOUR
            DEFINED AS !Value to be used for the ISO 9542 suggested ES configuration timer
                value (in seconds),
                advertised in IS hellos generated by this network entity.!;;
REGISTERED AS { NLM.aoi suggestedESConfigurationTimer (25) };

-- Parameters

reachabilityChange PARAMETER

        CONTEXT EVENT-INFO;
        WITH SYNTAX NLM.ReachabilityChangeSyntax;
REGISTERED AS { NLM.proi reachabilityChange (12) };
```


Copyright International Organization for Standardization
Provided by IHS under license with ISO
No reproduction or networking permitted without license from IHS
Not for Resale

5.8 The connection-mode network service managed object

```
-- There is no more than one of these MOs per network entity.
-- Its definition permits it to be created and deleted explicitly by
-- management operation, but in some systems it will exist inherently
-- and neither creation nor deletion by management operation will be
-- possible. Name bindings are defined for both cases.
--
-- When the protocol machine is operable, the operationalState shall
-- have the value 'enabled'; otherwise it shall have the value 'disabled'.
-- Transitions of operationalState shall be reported using the
-- stateChange notification. A cONS MO may be created in the
-- 'enabled' operational state.


cONS MANAGED OBJECT CLASS
        DERIVED FROM "GMI":coProtocolMachine;
        CHARACTERIZED BY cONS-P PACKAGE
            BEHAVIOUR commonStateChange-B,
                commonCreationDeletion-B;
            ATTRIBUTES
                "DMI":administrativeState GET-REPLACE,
                "GMI":coProtocolMachineId
                    INITIAL VALUE NLM.cONSId-Value
                    GET,
                operationalSystemType
                    INITIAL VALUE DERIVATION RULE operationalSystemTypeIV-B
                    GET;
            ATTRIBUTE GROUPS
                "DMI":state
                    "DMI":administrativeState
                    "DMI":operationalState;
            ACTIONS
                "GMI":activate,
                "GMI":deactivate,
                "GMI":deactivateWhenNoUsers;
            NOTIFICATIONS
                "DMI":objectCreation,
                "DMI":objectDeletion,
                "DMI":stateChange;
        ;;
REGISTERED AS { NLM.moi cONS (24) };

-- Name Bindings

cONS-networkEntity-Management NAME BINDING
        SUBORDINATE OBJECT CLASS cONS AND SUBCLASSES;
        NAMED BY
            SUPERIOR OBJECT CLASS networkEntity AND SUBCLASSES;
            WITH ATTRIBUTE "GMI":coProtocolMachineId;
        BEHAVIOUR cONS-networkEntity-Management-B BEHAVIOUR
            DEFINED AS !The name binding that applies when the cONS managed object
                can be created and deleted by management.!;;
        CREATE;
        DELETE ONLY-IF-NO-CONTAINED-OBJECTS;
REGISTERED AS { NLM.nboi cONS-networkEntity-Management (8) };

cONS-networkEntity-Automatic NAME BINDING
        SUBORDINATE OBJECT CLASS cONS AND SUBCLASSES;
        NAMED BY
            SUPERIOR OBJECT CLASS networkEntity AND SUBCLASSES;
            WITH ATTRIBUTE "GMI":coProtocolMachineId;
        BEHAVIOUR cONS-networkEntity-Automatic-B BEHAVIOUR
            DEFINED AS !The name binding that applies when the cONS managed object
                cannot be created or deleted by management.!;;
REGISTERED AS { NLM.nboi cONS-networkEntity-Automatic (17) };
```


Copyright International Organization for Standardization
Provided by IHS under license with ISO
No reproduction or networking permitted without license from IHS
Not for Resale

5.9 The network connection managed object

```
-- There is one instance of this MO corresponding to each network
-- connection. It is created and deleted by the operation of the protocol
-- machine.
--
-- In some configurations the underlyingConnectionNames attribute may
-- contain more than one distinguished name. In this case, the type of
-- the underlying MO (and hence the particular underlying resource)
-- can only be determined by inspection of the MO pointed to by this
-- distinguished name.


networkConnection MANAGED OBJECT CLASS
        DERIVED FROM "GMI":singlePeerConnection;
        CHARACTERIZED BY networkConnection-P PACKAGE
            BEHAVIOUR
                commonCreationDeletion-B,
                successfulConnectionEstablishment-B,
                deactivateConnection-B,
                networkConnection-P-B BEHAVIOUR
                DEFINED AS !The "GMI":underlyingConnectionNames
                    attribute shall contain the distinguished name(s) of the
                    other MO(s) which represent the resources used to support
                    this connection. In the case of the CONS operating
                    directly over X.25, this shall be the single distinguished
                    name of the underlying virtual call or permanent
                    virtual circuit MO.!;;
            ATTRIBUTES
                localNSAPMO GET,
                remoteNSAPAddress GET;
            ACTIONS
                "GMI":deactivate;
            NOTIFICATIONS
                "DMI":objectCreation,
                "DMI":objectDeletion,
                "GMI":communicationsInformation;
            ;;
REGISTERED AS { NLM.moi networkConnection (13) };

-- Name Bindings

networkConnection-cONS NAME BINDING
        SUBORDINATE OBJECT CLASS networkConnection AND SUBCLASSES;
        NAMED BY
            SUPERIOR OBJECT CLASS cONS AND SUBCLASSES;
            WITH ATTRIBUTE "GMI":connectionId;
        DELETE;
REGISTERED AS { NLM.nboi networkConnection-cONS (19) };

-- Attributes

localNSAPMO ATTRIBUTE
        WITH ATTRIBUTE SYNTAX NLM.LocalDistinguishedName;
        MATCHES FOR EQUALITY;
        BEHAVIOUR localNSAPMO-B BEHAVIOUR
            DEFINED AS !Pointer to local nSAP MO.
                This is a relationship attribute which points to the
                local nSAP MO which is associated with the connection.!;;
REGISTERED AS { NLM.aoi localNSAPMO (106) };

remoteNSAPAddress ATTRIBUTE
        WITH ATTRIBUTE SYNTAX NLM.NAddress;
        MATCHES FOR EQUALITY;
        BEHAVIOUR remoteNSAPAddress-B BEHAVIOUR
            DEFINED AS !The remote NSAP Address
                associated with the connection.!;;
REGISTERED AS { NLM.aoi remoteNSAPAddress (107) };
```


Copyright International Organization for Standardization
Provided by IHS under license with ISO
No reproduction or networking permitted without license from IHS
Not for Resale

5.10 The X.25 PLE and related managed objects

5.10.1 The X.25 PLE managed object

```
-- This MO class is never instantiated. It serves as a generic
-- x25PLE MO from which both the x25PLE-DTE and x25PLE-DCE MO
-- classes are derived.
--
-- Note that the values of the x25PLEId naming attribute are
-- required to be unique across all instances of MOs derived from
-- this, which have a common superior.


x25PLE MANAGED OBJECT CLASS
        DERIVED FROM "DMI":top;
        CHARACTERIZED BY x25PLE-P PACKAGE
            BEHAVIOUR commonStateChange-B,
                commonCreationDeletion-B,
                logicalChannelAssignmentsX25PLE-P-B BEHAVIOUR
                DEFINED AS !The logicalChannelAssignments attribute shall not be replaceable
                    when the value of the operationalState attribute is 'enabled'.!;;
            ATTRIBUTES
                x25PLEId GET,
                "DMI":operationalState GET,
                "DMI":administrativeState GET-REPLACE,
                protocolVersionSupported GET,
                localDTEAddress GET-REPLACE,
                x25PLEMode GET-REPLACE,
                defaultThroughputClasses REPLACE-WITH-DEFAULT
                    DEFAULT VALUE NLM.nullBidirectionalValues
                    GET-REPLACE,
                flowControlParameterNegotiation REPLACE-WITH-DEFAULT
                    GET-REPLACE,
                defaultPacketSizes REPLACE-WITH-DEFAULT
                    DEFAULT VALUE NLM.nullBidirectionalValues
                    GET-REPLACE,
                defaultWindowSizes REPLACE-WITH-DEFAULT
                    DEFAULT VALUE NLM.nullBidirectionalValues
                    GET-REPLACE,
                throughputClassNegotiation REPLACE-WITH-DEFAULT
                    GET-REPLACE,
                sN-ServiceProvider REPLACE-WITH-DEFAULT
                    GET-REPLACE,
                sN-SAP GET,
                logicalChannelAssignments GET-REPLACE;
            ATTRIBUTE GROUPS
                "DMI":state
                    "DMI":administrativeState
                    "DMI":operationalState;
            ACTIONS
                "GMI":activate,
                "GMI":deactivate;
            NOTIFICATIONS
                "DMI":stateChange,
                "DMI":objectCreation,
                "DMI":objectDeletion;
            ;;
REGISTERED AS { NLM.moi x25PLE (25) };
```

5.10.2 The X.25 PLE initial values managed object

```
-- This MO class is never instantiated. It serves as a generic
-- x25PLE IVMO from which both the x25PLEIVMO-DTE and x25PLEIVMO-DCE
-- MO classes are derived.
--
-- Note that the values of the x25PLEIVMOId naming attribute are
-- required to be unique across all instances of MOs derived from
-- this, which have a common superior.
```


Copyright International Organization for Standardization
Provided by IHS under license with ISO
No reproduction or networking permitted without license from IHS
Not for Resale

```
x25PLEIVMO MANAGED OBJECT CLASS
        DERIVED FROM "DMI":top;
        CHARACTERIZED BY x25PLEIVMO-P PACKAGE
            BEHAVIOUR commonCreationDeletion-B;
            ATTRIBUTES
                defaultPacketSizes REPLACE-WITH-DEFAULT
                    DEFAULT VALUE NLM.nullBidirectionalValues
                    GET-REPLACE,
                defaultThroughputClasses REPLACE-WITH-DEFAULT
                    DEFAULT VALUE NLM.nullBidirectionalValues
                    GET-REPLACE,
                defaultWindowSizes REPLACE-WITH-DEFAULT
                    DEFAULT VALUE NLM.nullBidirectionalValues
                    GET-REPLACE,
                flowControlParameterNegotiation REPLACE-WITH-DEFAULT
                    GET-REPLACE,
                localDTEAddress GET-REPLACE,
                logicalChannelAssignments GET-REPLACE,
                sN-ServiceProvider GET-REPLACE,
                throughputClassNegotiation REPLACE-WITH-DEFAULT
                    GET-REPLACE,
                x25PLEIVMOId GET,
                x25PLEMode GET-REPLACE;
            NOTIFICATIONS
                "DMI":objectCreation,
                "DMI":objectDeletion;
            ;;
REGISTERED AS { NLM.moi x25PLEIVMO (26) };
```

5.10.3 The X.25 PLE DTE managed object

```
-- There may be multiple instances of these MOs within a system,
-- corresponding to Multiple X.25 PLEs.
--
-- The definition of this MO
-- permits it to be created and deleted explicitly by
-- management operation or to be created and deleted automatically as
-- part of system operation. When an instance of this MO
-- is created automatically, an instance of the
-- x25PLEIVMO-DTE may be used as the source
-- of the initial values for attributes of this MO.
--
-- When the x25 PLE is operable, the operationalState shall
-- have the value 'enabled'; otherwise it shall have the value 'disabled'.
-- Transitions of operationalState shall be reported using the
-- stateChange notification.
```

```
x25PLE-DTE MANAGED OBJECT CLASS
        DERIVED FROM x25PLE;
        CHARACTERIZED BY x25PLE-DTE-P PACKAGE
            BEHAVIOUR
                x25PLEPImportedNotifications-B;
            ATTRIBUTES
                callDeflectionSubscription REPLACE-WITH-DEFAULT
                    GET-REPLACE,
                callRequestResponseTimer REPLACE-WITH-DEFAULT
                    DEFAULT VALUE NLM.callRequestResponseTimerDefault
                    GET-REPLACE,
                extendedPacketSequenceNumbering REPLACE-WITH-DEFAULT
                    GET-REPLACE,
                maxActiveCircuits REPLACE-WITH-DEFAULT
                    DEFAULT VALUE NLM.nullChoiceInteger
                    GET-REPLACE,
                minimumRecallTimer REPLACE-WITH-DEFAULT
                    GET-REPLACE,
                resetRequestResponseTimer REPLACE-WITH-DEFAULT
                    DEFAULT VALUE NLM.resetRequestResponseTimerDefault
                    GET-REPLACE,
```


Copyright International Organization for Standardization
Provided by IHS under license with ISO
No reproduction or networking permitted without license from IHS
Not for Resale

```
                restartRequestRetransmissionCount REPLACE-WITH-DEFAULT
                    DEFAULT VALUE NLM.restartRequestRetransmissionCountDefault
                    GET-REPLACE,
                restartRequestResponseTimer REPLACE-WITH-DEFAULT
                    DEFAULT VALUE NLM.restartRequestResponseTimerDefault
                    GET-REPLACE,
                clearRequestResponseTimer REPLACE-WITH-DEFAULT
                    DEFAULT VALUE NLM.clearRequestResponseTimerDefault
                    GET-REPLACE,
                interruptResponseTimer REPLACE-WITH-DEFAULT
                    DEFAULT VALUE NLM.interruptResponseTimerDefault
                    GET-REPLACE,
                resetRequestRetransmissionCount REPLACE-WITH-DEFAULT
                    DEFAULT VALUE NLM.resetRequestRetransmissionCountDefault
                    GET-REPLACE,
                clearRequestRetransmissionCount REPLACE-WITH-DEFAULT
                    DEFAULT VALUE NLM.clearRequestRetransmissionCountDefault
                    GET-REPLACE,
                callAttempts GET,
                protocolErrorsDetectedLocally GET,
                protocolErrorsAccusedOf GET,
                callEstablishmentRetryCountsExceeded GET;
            ATTRIBUTE GROUPS
                "GMI":counters
                    callAttempts
                    protocolErrorsDetectedLocally
                    protocolErrorsAccusedOf
                    callEstablishmentRetryCountsExceeded;
            NOTIFICATIONS
                "DMI":communicationsAlarm
                      notificationData;
            ;;
        CONDITIONAL PACKAGES
            dTEX25PLECounters-P
                PRESENT IF !the instance supports the dTEX25PLECounters-P
                    capabilities!,
            receivingWindowRotationRecoveryProcedures-P
                PRESENT IF !The optional window rotation recovery procedures
                    are implemented at a receiving DTE!,
            transmittingWindowRotationRecoveryProcedures-P
                PRESENT IF !The optional window rotation recovery procedures
                    are implemented at a transmitting DTE!,
            packetRetransmissionProcedures-P
                PRESENT IF !The optional packet retransmission procedures
                    are implemented!,
            onlineRegistration-P
                PRESENT IF !The optional online registration facility
                    is implemented!;
REGISTERED AS { NLM.moi x25PLE-DTE (17) };
```

5.10.4 The X.25 PLE DCE managed object

```
-- There may be multiple instances of these MOs within a system,
-- corresponding to Multiple X.25 PLEs.
--
-- The definition of this MO
-- permits it to be created and deleted explicitly by
-- management operation or to be created and deleted automatically as
-- part of system operation. When an instance of this MO
-- is created automatically, an instance of the
-- x25PLEIVMO-DCE may be used as the source
-- of the initial values for attributes of this MO.
--
-- When the x25 PLE is operable, the operationalState shall
-- have the value 'enabled'; otherwise it shall have the value 'disabled'.
-- Transitions of operationalState shall be reported using the
-- stateChange notification.
```


Copyright International Organization for Standardization
Provided by IHS under license with ISO
No reproduction or networking permitted without license from IHS
Not for Resale

```
x25PLE-DCE MANAGED OBJECT CLASS
        DERIVED FROM x25PLE;
        CHARACTERIZED BY x25PLE-DCE-P PACKAGE
            ATTRIBUTES
                callAttempts GET,
                callsConnected GET,
                cUG REPLACE-WITH-DEFAULT
                    GET-REPLACE,
                fastSelectAcceptance REPLACE-WITH-DEFAULT
                    GET-REPLACE,
                incomingCallsBarred REPLACE-WITH-DEFAULT
                    GET-REPLACE,
                oneWayLogicalChannelOutgoing REPLACE-WITH-DEFAULT
                    GET-REPLACE,
                outgoingCallsBarred REPLACE-WITH-DEFAULT
                    GET-REPLACE;
            ATTRIBUTE GROUPS
                "GMI":counters
                    callAttempts
                    callsConnected;
        ;;
        CONDITIONAL PACKAGES
            dCECommonVirtualCircuitCounters-P
                PRESENT IF !the instance supports the dCECommonVirtualCircuitCounters capabilities!,
            dCEX25PLEFacilities-P
                PRESENT IF !the instance supports the dCEX25PLEFacilities capabilities!,
            dCEX25PLETimers-P
                PRESENT IF !the instance supports the dCEX25PLETimers capabilities!;
REGISTERED AS { NLM.moi x25PLE-DCE (27) };
```

5.10.5 The X.25 PLE DTE initial values managed object

```
-- There may be multiple instances of the x25PLEIVMO-DTE in a system.
-- An x25PLEIVMO-DTE may be used to supply initial
-- values for the attributes of the x25PLE-DTE MO.
-- Different instances of x25PLEIVMO-DTE may contain different initial values.
--
-- Its definition permits it to be created and deleted explicitly by
-- management operation.


x25PLEIVMO-DTE MANAGED OBJECT CLASS
        DERIVED FROM x25PLEIVMO;
        CHARACTERIZED BY x25PLEIVMO-DTE-P PACKAGE
            ATTRIBUTES
                callDeflectionSubscription REPLACE-WITH-DEFAULT
                    GET-REPLACE,
                callRequestResponseTimer REPLACE-WITH-DEFAULT
                    DEFAULT VALUE NLM.callRequestResponseTimerDefault
                    GET-REPLACE,
                clearRequestResponseTimer REPLACE-WITH-DEFAULT
                    DEFAULT VALUE NLM.clearRequestResponseTimerDefault
                    GET-REPLACE,
                clearRequestRetransmissionCount REPLACE-WITH-DEFAULT
                    DEFAULT VALUE NLM.clearRequestRetransmissionCountDefault
                    GET-REPLACE,
                extendedPacketSequenceNumbering REPLACE-WITH-DEFAULT
                    GET-REPLACE,
                interruptResponseTimer REPLACE-WITH-DEFAULT
                    DEFAULT VALUE NLM.interruptResponseTimerDefault
                    GET-REPLACE,
                maxActiveCircuits REPLACE-WITH-DEFAULT
                    DEFAULT VALUE NLM.nullChoiceInteger
                    GET-REPLACE,
                minimumRecallTimer REPLACE-WITH-DEFAULT
                    GET-REPLACE,
                resetRequestResponseTimer REPLACE-WITH-DEFAULT
                    DEFAULT VALUE NLM.resetRequestResponseTimerDefault
                    GET-REPLACE,
```


Copyright International Organization for Standardization
Provided by IHS under license with ISO
No reproduction or networking permitted without license from IHS
Not for Resale

```
                resetRequestRetransmissionCount REPLACE-WITH-DEFAULT
                    DEFAULT VALUE NLM.resetRequestRetransmissionCountDefault
                    GET-REPLACE,
                restartRequestResponseTimer REPLACE-WITH-DEFAULT
                    DEFAULT VALUE NLM.restartRequestResponseTimerDefault
                    GET-REPLACE,
                restartRequestRetransmissionCount REPLACE-WITH-DEFAULT
                    DEFAULT VALUE NLM.restartRequestRetransmissionCountDefault
                    GET-REPLACE;
            ;;
        CONDITIONAL PACKAGES
            receivingWindowRotationRecoveryProcedures-P
            PRESENT IF !The optional window rotation recovery procedures are implemented
                at a receiving DTE!,
            transmittingWindowRotationRecoveryProcedures-P
            PRESENT IF !The optional window rotation recovery procedures are implemented
                at a transmitting DTE!,
            packetRetransmissionProcedures-P
            PRESENT IF !The optional packet retransmission procedures are implemented!,
            onlineRegistration-P
                PRESENT IF !The optional online registration facility is implemented!;

REGISTERED AS { NLM.moi x25PLEIVMO-DTE (20) };
```

5.10.6 The X.25 PLE DCE initial values managed object

```
-- There may be multiple instances of the x25PLEIVMO-DCE in a system.
-- An x25PLEIVMO-DCE may be used to supply initial
-- values for the attributes of the x25PLE-DCE MO.
-- Different instances of x25PLEIVMO-DCE may contain different initial values.
--
-- Its definition permits it to be created and deleted explicitly by
-- management operation.


x25PLEIVMO-DCE MANAGED OBJECT CLASS
   DERIVED FROM x25PLEIVMO;
REGISTERED AS { NLM.moi x25PLEIVMO-DCE (28) };

-- Packages

dCECommonVirtualCircuitCounters-P PACKAGE
        BEHAVIOUR dCECommonVirtualCircuitCounters-P-B BEHAVIOUR
            DEFINED AS !provides the set of common counters used in the normal operation of a
                DCE environment, as defined in the appropriate clauses.!;,
            octetsSentReceivedCounter-B;
        ATTRIBUTES
            dataPacketsReceived GET,
            dataPacketsSent GET,
            interruptPacketsReceived GET,
            interruptPacketsSent GET,
            interruptTimerExpiries GET,
            "DMI":octetsReceivedCounter GET,
            "DMI":octetsSentCounter GET,
            providerInitiatedDisconnects GET,
            providerInitiatedResets GET,
            remotelyInitiatedRestarts GET,
            remotelyInitiatedResets GET,
            resetTimeouts GET,
            x25SegmentsReceived GET,
            x25SegmentsSent GET;
        ATTRIBUTE GROUPS
            "GMI":counters
                dataPacketsReceived
                dataPacketsSent
                interruptPacketsReceived
                interruptPacketsSent
                interruptTimerExpiries
```

--`,,```,,,,````-`-`,,`,,`,`,,`---

Copyright International Organization for Standardization
Provided by IHS under license with ISO
No reproduction or networking permitted without license from IHS
Not for Resale

```
                "DMI":octetsReceivedCounter
                "DMI":octetsSentCounter
                providerInitiatedDisconnects
                providerInitiatedResets
                remotelyInitiatedRestarts
                remotelyInitiatedResets
                resetTimeouts
                x25SegmentsReceived
                x25SegmentsSent;
REGISTERED AS { NLM.poi dCECommonVirtualCircuitCounters-P (23) };

dCEX25PLEFacilities-P PACKAGE
        BEHAVIOUR dCEX25PLEFacilities-P-B BEHAVIOUR
            DEFINED AS !provides the set of Facilities which are optional, and may be implemented in a
                DCE environment, as defined in the appropriate clauses.!;;
        ATTRIBUTES
            bilateralCUG REPLACE-WITH-DEFAULT
                GET-REPLACE,
            bilateralCUGWithOutgoingAccess REPLACE-WITH-DEFAULT
                GET-REPLACE,
            callDeflectionSubscription REPLACE-WITH-DEFAULT
                GET-REPLACE,
            callRedirection REPLACE-WITH-DEFAULT
                GET-REPLACE,
            chargingInformation REPLACE-WITH-DEFAULT
                GET-REPLACE,
            cUGWithIncomingAccess REPLACE-WITH-DEFAULT
                GET-REPLACE,
            cUGWithOutgoingAccess REPLACE-WITH-DEFAULT
                GET-REPLACE,
            dBitModification REPLACE-WITH-DEFAULT
                GET-REPLACE,
            defaultThroughputClassesAssignment REPLACE-WITH-DEFAULT
                GET-REPLACE,
            extendedPacketSequenceNumbering REPLACE-WITH-DEFAULT
                GET-REPLACE,
            huntGroup REPLACE-WITH-DEFAULT
                GET-REPLACE,
            incomingCallBarredWithinCUG REPLACE-WITH-DEFAULT
                GET-REPLACE,
            localChargingPrevention REPLACE-WITH-DEFAULT
                GET-REPLACE,
            nonStandardDefaultPacketSizes REPLACE-WITH-DEFAULT
                GET-REPLACE,
            nonStandardDefaultWindowSizes REPLACE-WITH-DEFAULT
                GET-REPLACE,
            nUIOverride REPLACE-WITH-DEFAULT
                GET-REPLACE,
            nUISubscription REPLACE-WITH-DEFAULT
                GET-REPLACE,
            oneWayLogicalChannelIncoming REPLACE-WITH-DEFAULT
                GET-REPLACE,
            onlineFacilityRegistration REPLACE-WITH-DEFAULT
                GET-REPLACE,
            outgoingCallBarredWithinCUG REPLACE-WITH-DEFAULT
                GET-REPLACE,
            packetRetransmission REPLACE-WITH-DEFAULT
                GET-REPLACE,
            reverseChargingAcceptance REPLACE-WITH-DEFAULT
                GET-REPLACE,
             rOASubscription REPLACE-WITH-DEFAULT
                GET-REPLACE;
REGISTERED AS { NLM.poi dCEX25PLEFacilities-P (26) };

dCEX25PLETimers-P PACKAGE
        BEHAVIOUR dCEX25PLETimers-P-B BEHAVIOUR
            DEFINED AS !provides the set of timers used during the normal operation in a DCE
                environment, as defined in the appropriate clauses.!;;
```

--`,,```,,,,````-`-`,,`,,`,`,,`---

Copyright International Organization for Standardization
Provided by IHS under license with ISO
No reproduction or networking permitted without license from IHS
Not for Resale

```
        ATTRIBUTES
            clearIndication GET-REPLACE,
                -- T13 timer.
            incomingCall GET-REPLACE,
                -- T11 timer.
            resetIndication GET-REPLACE,
                -- T12 timer.
            restartIndication GET-REPLACE;
                -- T10 timer.
REGISTERED AS { NLM.poi dCEX25PLETimers-P (25) };

dTEX25PLECounters-P PACKAGE
        BEHAVIOUR dTEX25PLECounters-P-B BEHAVIOUR
            DEFINED AS !Provides the set of counters which may be associated
                with the x25PLE-DTE MO.!;,
                octetsSentReceivedCounter-B;
        ATTRIBUTES
            "DMI":octetsReceivedCounter GET,
                -- Note that the DMI definition is in terms of user data octets.
            "DMI":octetsSentCounter GET,
                -- Note that the DMI definition is in terms of user data octets.
            callTimeouts GET,
            callsConnected GET,
            clearCountsExceeded GET,
            clearTimeouts GET,
            dataPacketsReceived GET,
            dataPacketsSent GET,
                -- Note that the "DMI":PDUsSentCounter
                -- cannot be used here since it is defined as total number of PDUs sent,
                -- not just data PDUs.
            dataRetransmissionTimerExpiries GET,
            providerInitiatedResets GET,
            providerInitiatedDisconnects GET,
            remotelyInitiatedResets GET,
            remotelyInitiatedRestarts GET,
            resetTimeouts GET,
            restartCountsExceeded GET;
        ATTRIBUTE GROUPS
            "GMI":counters
                "DMI":octetsSentCounter
                "DMI":octetsReceivedCounter
                callTimeouts
                callsConnected
                clearCountsExceeded
                clearTimeouts
                dataPacketsReceived
                dataPacketsSent
                dataRetransmissionTimerExpiries
                providerInitiatedDisconnects
                providerInitiatedResets
                remotelyInitiatedResets
                remotelyInitiatedRestarts
                resetTimeouts
                restartCountsExceeded;
REGISTERED AS { NLM.poi dTEX25PLECounters-P (18) };

packetRetransmissionProcedures-P PACKAGE
        BEHAVIOUR packetRetransmissionProcedures-P-B BEHAVIOUR
            DEFINED AS !Controls the operation of the optional packet retransmission procedures
                as described in 13.4 of ISO/IEC 8208 or ITU-T Rec. X.25 (2nd Edition).!;;
        ATTRIBUTES
            rejectResponseTimer REPLACE-WITH-DEFAULT
                DEFAULT VALUE NLM.rejectResponseTimerDefault
                GET-REPLACE,
            rejectRetransmissionCount REPLACE-WITH-DEFAULT
                DEFAULT VALUE NLM.rejectRetransmissionCountDefault
                GET-REPLACE;
REGISTERED AS { NLM.poi packetRetransmissionProcedures-P (14) };
```


Copyright International Organization for Standardization
Provided by IHS under license with ISO
No reproduction or networking permitted without license from IHS
Not for Resale

```
receivingWindowRotationRecoveryProcedures-P PACKAGE
        BEHAVIOUR
            receivingWindowRotationRecoveryProcedures-P-B BEHAVIOUR
            DEFINED AS !Controls the operation of the optional window rotation recovery procedures
                at a receiving DTE as described in 11.2.2 of ISO/IEC 8208 or ITU-T Rec. X.25 (2nd Edition).!;;
        ATTRIBUTES
            windowStatusTransmissionTimer REPLACE-WITH-DEFAULT
                DEFAULT VALUE NLM.windowStatusTransmissionTimerDefault
                GET-REPLACE;
REGISTERED AS { NLM.poi receivingWindowRotationRecoveryProcedures-P (12) };

transmittingWindowRotationRecoveryProcedures-P PACKAGE
        BEHAVIOUR
            transmittingWindowRotationRecoveryProcedures-P-B BEHAVIOUR
            DEFINED AS !Controls the operation of the optional window rotation recovery procedures
              at a transmitting DTE as described in 11.2.1 of ISO/IEC 8208 or ITU-T Rec. X.25 (2nd Edition).!;;
        ATTRIBUTES
            windowRotationTimer REPLACE-WITH-DEFAULT
                DEFAULT VALUE
                    NLM.windowRotationTimerDefault
                GET-REPLACE,
            dataPacketRetransmissionCount REPLACE-WITH-DEFAULT
                DEFAULT VALUE NLM.dataPacketRetransmissionCountDefault
                GET-REPLACE;
REGISTERED AS { NLM.poi transmittingWindowRotationRecoveryProcedures-P (13) };


onlineRegistration-P PACKAGE
        BEHAVIOUR onlineRegistration-P-B BEHAVIOUR
            DEFINED AS !Controls the operation of the optional online registration facility as described
                in 13.1 of ISO/IEC 8208 or ITU-T Rec. X.25 (2nd Edition).!;;
        ATTRIBUTES
            registrationRequestResponseTimer REPLACE-WITH-DEFAULT
                DEFAULT VALUE NLM.registrationRequestResponseTimerDefault
                GET-REPLACE,
            registrationRequestRetransmissionCount REPLACE-WITH-DEFAULT
                DEFAULT VALUE NLM.registrationRequestRetransmissionCountDefault
                GET-REPLACE,
            registrationPermitted REPLACE-WITH-DEFAULT
                DEFAULT VALUE NLM.registrationPermittedDefault
                GET-REPLACE;
REGISTERED AS { NLM.poi onlineRegistration-P (11) };
-- Behaviours

x25PLEPImportedNotifications-B BEHAVIOUR
        DEFINED AS !The x25PLE-P package imports the communicationsAlarm notification from
            Rec. X.721 (1992) | ISO/IEC 10165-2.
            It is used to report the following x25PLE managed object events.
            providerInitiatedDisconnect:

                Issued upon receipt of a clear packet with a cause code other than
                'DTE originated'.
                The information relating to the packet shall be reported as a
                parameter in the additionalInformation field of the communicationsAlarm,
                using the notificationData PARAMETER.
                The significance sub-parameter of each item of additionalInformation
                shall be set to the value 'False' (i.e. not significant) so that a managing
                system receiving the event report will be less likely to reject it.
                The value NLM.providerInitiatedDisconnect shall be reported in the specificProblems
                parameter.
                The probableCause shall be set to NLM.communicationsProtocolError.
                The perceivedSeverity shall be set to 'Minor'. A subsequent communicationsAlarm
                with a perceivedSeverity value of 'Cleared' shall not be generated.
                No other fields or parameters shall be used, with the exception of further
                parameters in the additionalInformation field.
```

Copyright International Organization for Standardization
Provided by IHS under license with ISO
No reproduction or networking permitted without license from IHS
Not for Resale

remotelyInitiatedReset:

**Issued upon occurrence of a remotely initiated reset.
This event is issued in lieu of a 'providerInitiatedReset'
when operating in a DTE-DXE environment.
The information relating to the packet shall be reported as a
parameter in the additionalInformation field of the communicationsAlarm,
using the notificationData PARAMETER
The significance sub-parameter of each item of additionalInformation
shall be set to the value 'False' (i.e. not significant) so that a managing
system receiving the event report will be less likely to reject it.
The value NLM.remotelyInitiatedDisconnect shall be reported in the specificProblems
parameter.
The probableCause shall be set to NLM.communicationsProtocolError.
The perceivedSeverity shall be set to 'Minor'. A subsequent communicationsAlarm
with a perceivedSeverity value of 'Cleared' shall not be generated.
No other fields or parameters shall be used, with the exception of further
parameters in the additionalInformation field.**

providerInitiatedReset:

**Issued upon occurrence of a provider initiated reset.
This event is issued when operating in a DTE-DCE environment.
The information relating to the packet shall be reported as a
parameter in the additionalInformation field of the communicationsAlarm,
using the notificationData PARAMETER
The significance sub-parameter of each item of additionalInformation
shall be set to the value 'False' (i.e. not significant) so that a managing
system receiving the event report will be less likely to reject it.
The value NLM.providerInitiatedReset shall be reported in the specificProblems parameter.
The probableCause shall be set to NLM.communicationsProtocolError.
The perceivedSeverity shall be set to 'Minor'. A subsequent communicationsAlarm
with a perceivedSeverity value of 'Cleared' shall not be generated.
No other fields or parameters shall be used, with the exception of further
parameters in the additionalInformation field.**

remotelyInitiatedRestart:

**Issued upon receipt of a remotely (including provider) initiated
restart.
The information relating to the packet shall be reported as a
parameter in the additionalInformation field of the communicationsAlarm,
using the notificationData PARAMETER
The significance sub-parameter of each item of additionalInformation
shall be set to the value 'False' (i.e. not significant) so that a managing
system receiving the event report will be less likely to reject it.
The value NLM.remotelyInitiatedRestart shall be reported in the specificProblems parameter.
The probableCause shall be set to NLM.communicationsProtocolError.
The perceivedSeverity shall be set to 'Minor'. A subsequent communicationsAlarm
with a perceivedSeverity value of 'Cleared' shall not be generated.
No other fields or parameters shall be used, with the exception of further
parameters in the additionalInformation field.**

restartCountExceeded:

**Issued on restart failure due to restart count (R20) exceeded.
The information relating to the packet shall be reported as a
parameter in the additionalInformation field of the communicationsAlarm,
using the notificationData PARAMETER
The significance sub-parameter of each item of additionalInformation
shall be set to the value 'False' (i.e. not significant) so that a managing
system receiving the event report will be less likely to reject it.
The value NLM.restartCountExceeded shall be reported in the specificProblems parameter.
The probableCause shall be set to NLM.communicationsProtocolError.
The perceivedSeverity shall be set to 'Minor'. A subsequent communicationsAlarm
with a perceivedSeverity value of 'Cleared' shall not be generated.
No other fields or parameters shall be used, with the exception of further
parameters in the additionalInformation field.**

--`,,```,,,,````-`-`,,`,,`,`,,`---

Copyright International Organization for Standardization
Provided by IHS under license with ISO
No reproduction or networking permitted without license from IHS
Not for Resale

protocolErrorDetectedLocally:

Issued upon receipt of a packet which causes the "A=Error" action in the ISO/IEC 8208 or ITU-T Rec. X.25 state tables to be taken.
The information relating to the packet shall be reported as a parameter in the additionalInformation field of the communicationsAlarm, using the notificationData PARAMETER. The values of cause and diagnostic codes shall be those which would have been placed in a diagnostic packet had one been generated by the DTE (i.e. as if it were a DTE). The actual generation of such a packet is not required.
The significance sub-parameter of each item of additionalInformation shall be set to the value 'False' (i.e. not significant) so that a managing system receiving the event report will be less likely to reject it.
The value NLM.communicationsProtocolErrorDetectedLocally shall be reported in the specificProblems parameter.
The probableCause shall be set to NLM.communicationsProtocolError.
The perceivedSeverity shall be set to 'Minor'. A subsequent communicationsAlarm with a perceivedSeverity value of 'Cleared' shall not be generated.
No other fields or parameters shall be used, with the exception of further parameters in the additionalInformation field.

accusedOfProtocolError:

Issued upon receipt of a diagnostic packet or a clear, reset or restart packet with a cause code equal to one of the following:
- **Remote Procedure Error,**
- **Incompatible Destination,**
- **Invalid Facility Request,**
- **Local Procedure Error.**

No other x25PLE communication alarm shall be generated as a result of this particular instance of packet.
The information relating to the packet shall be reported as a parameter in the additionalInformation field of the communicationsAlarm, using the notificationData PARAMETER
The significance sub-parameter of each item of additionalInformation shall be set to the value 'False' (i.e. not significant) so that a managing system receiving the event report will be less likely to reject it.
The value NLM.accusedOfProtocolError shall be reported in the specificProblems parameter.
The probableCause shall be set to NLM.communicationsProtocolError.
The perceivedSeverity shall be set to 'Minor'. A subsequent communicationsAlarm with a perceivedSeverity value of 'Cleared' shall not be generated.
No other fields or parameters shall be used, with the exception of further parameters in the additionalInformation field.

callEstablishmentRetryCountExceeded:

Issued on retry failure during call establishment due to retry limit exceeded.
The information relating to the call shall be reported as a parameter in the additionalInformation field of the communicationsAlarm, using the notificationData PARAMETER
The significance sub-parameter of each item of additionalInformation shall be set to the value 'False' (i.e. not significant) so that a managing system receiving the event report will be less likely to reject it.
The value NLM.callEstablishmentRetryCountExceeded shall be reported in the specificProblems parameter.
The probableCause shall be set to NLM.communicationsProtocolError.
The perceivedSeverity shall be set to 'Minor'. A subsequent communicationsAlarm with a perceivedSeverity value of 'Cleared' shall not be generated.
No other fields or parameters shall be used, with the exception of further parameters in the additionalInformation field.

Copyright International Organization for Standardization
Provided by IHS under license with ISO
No reproduction or networking permitted without license from IHS
Not for Resale

```
            clearCountExceeded:

                Issued on retry failure due to clear limit (R23) exceeded.
                The information relating to the call shall be reported as a
                parameter in the additionalInformation field of the communicationsAlarm,
                using the notificationData PARAMETER
                The significance sub-parameter of each item of additionalInformation
                shall be set to the value 'False' (i.e. not significant) so that a managing
                system receiving the event report will be less likely to reject it.
                The value NLM.clearCountExceeded shall be reported in the
                specificProblems parameter.
                The probableCause shall be set to NLM.communicationsProtocolError.
                The perceivedSeverity shall be set to 'Minor'. A subsequent communicationsAlarm
                with a perceivedSeverity value of 'Cleared' shall not be generated.
                No other fields or parameters shall be used, with the exception of further
                parameters in the additionalInformation field.
        !;

-- Name Bindings

x25PLEIVMO-networkSubsystem NAME BINDING
        SUBORDINATE OBJECT CLASS x25PLEIVMO AND SUBCLASSES;
        NAMED BY
            SUPERIOR OBJECT CLASS networkSubsystem AND SUBCLASSES;
            WITH ATTRIBUTE x25PLEIVMOId;
        CREATE WITH-REFERENCE-OBJECT;
        DELETE;
REGISTERED AS { NLM.nboi x25PLEIVMO-networkSubsystem (10) };

x25PLE-networkSubsystem-Management NAME BINDING
        SUBORDINATE OBJECT CLASS x25PLE AND SUBCLASSES;
        NAMED BY
            SUPERIOR OBJECT CLASS networkSubsystem AND SUBCLASSES;
            WITH ATTRIBUTE x25PLEId;
        BEHAVIOUR x25PLE-networkSubsystem-Management-B BEHAVIOUR
            DEFINED AS !The name binding that applies when the x25PLE Managed Object
                or its subclasses are created by management operation.!;;
        CREATE WITH-REFERENCE-OBJECT;
        DELETE ONLY-IF-NO-CONTAINED-OBJECTS;
REGISTERED AS { NLM.nboi x25PLE-networkSubsystem-Management (9) };

x25PLE-networkSubsystem-Automatic NAME BINDING
        SUBORDINATE OBJECT CLASS x25PLE AND SUBCLASSES;
        NAMED BY
            SUPERIOR OBJECT CLASS networkSubsystem AND SUBCLASSES;
            WITH ATTRIBUTE x25PLEId;
        BEHAVIOUR x25PLE-networkSubsystem-Automatic-B BEHAVIOUR
            DEFINED AS !The name binding that applies when the x25PLE Managed Object
                or its subclasses are created by automatic operation of the system.
                The creation of an instance of the x25PLE MO or its subclass
                using this name binding may reference an instance of the x25PLEIVMO
                (or of its subclass). The means by which such an instance (if any)
                of the x25PLEIVMO (or its subclass) is identified a local matter.
                When this occurs,
                some of the initial values of the attributes of the instance
                of the x25PLE MO (or its subclass) may be supplied by the values of the
                attributes in the specified instance of the x25PLEIVMO. However, any
                such value may be overridden by a value supplied by local means (for
                example across an internal interface). Where values are supplied by the
                IVMO, the initial value of an attribute of the x25PLE MO (or its subclass)
                shall be the value of the corresponding attribute in the x25PLEIVMO
                (that is, which has the same attribute template label). The naming
                attribute of the x25PLE MO (or its subclass) is assigned a value
                according to local mechanisms.!;;
        DELETE;
REGISTERED AS { NLM.nboi x25PLE-networkSubsystem-Automatic (18) };
```


Copyright International Organization for Standardization
Provided by IHS under license with ISO
No reproduction or networking permitted without license from IHS
Not for Resale

```
-- Attributes

bilateralCUG ATTRIBUTE
        WITH ATTRIBUTE SYNTAX NLM.Boolean;
        MATCHES FOR EQUALITY;
        BEHAVIOUR bilateralCUG-B BEHAVIOUR
            DEFINED AS !The subscription of the bilateral closed user group facility
                as described in ITU-T Recommendation X.2. Expressed as a boolean
                where a value of 'True' indicates subscription
                and a value of 'False' indicates non-subscription.!;;
REGISTERED AS {  NLM.aoi bilateralCUG (125) };

bilateralCUGWithOutgoingAccess ATTRIBUTE
        WITH ATTRIBUTE SYNTAX NLM.Boolean;
        MATCHES FOR EQUALITY;
        BEHAVIOUR bilateralCUGWithOutgoingAccess-B BEHAVIOUR
            DEFINED AS !The subscription of the bilateral CUG with outgoing access facility
                as described in ITU-T Recommendation X.2. Expressed as a boolean
                where a value of 'True' indicates subscription
                and a value of 'False' indicates non-subscription.!;;
REGISTERED AS {  NLM.aoi bilateralCUGWithOutgoingAccess (127) };

callAttempts ATTRIBUTE
        DERIVED FROM "GMI":nonWrapping64BitCounter;
        BEHAVIOUR callAttempts-B BEHAVIOUR
            DEFINED AS !Counter of the total number of calls attempted.!;;
REGISTERED AS { NLM.aoi callAttempts (52) };

callDeflectionSubscription ATTRIBUTE
        WITH ATTRIBUTE SYNTAX NLM.Boolean;
        MATCHES FOR EQUALITY;
        BEHAVIOUR callDeflectionSubscription-B BEHAVIOUR
            DEFINED AS !The subscription of the call deflection facility
                as described in ITU-T Recommendation X.2. Expressed as a boolean
                where a value of 'True' indicates subscription and a value
                of "False" indicates non-subscription.!;;
REGISTERED AS {  NLM.aoi callDeflectionSubscription (114) };

callEstablishmentRetryCountsExceeded ATTRIBUTE
        DERIVED FROM "GMI":nonWrapping64BitCounter;
        BEHAVIOUR callEstablishmentRetryCountsExceeded-B BEHAVIOUR
            DEFINED AS !Counter associated with the callEstablishmentRetryCountExceeded event
                which generates a communications alarm notification.!;;
REGISTERED AS { NLM.aoi callEstablishmentRetryCountsExceeded (65) };

callRedirection ATTRIBUTE
        WITH ATTRIBUTE SYNTAX NLM.Boolean;
        MATCHES FOR EQUALITY;
        BEHAVIOUR callRedirection-B BEHAVIOUR
            DEFINED AS !The subscription of the call redirection facility
                as described in ITU-T Recommendation X.2 Expressed as a boolean
                where a value of 'True' indicates subscription and a value
                of 'False' indicates non-subscription.!;;
REGISTERED AS { NLM.aoi callRedirection (129) };

callRequestResponseTimer ATTRIBUTE
        WITH ATTRIBUTE SYNTAX NLM.Integer;
        MATCHES FOR EQUALITY, ORDERING;
        BEHAVIOUR callRequestResponseTimer-B BEHAVIOUR
            DEFINED AS !Value for Timer T21 (Call Request Response Timer)
                in seconds.!;;
REGISTERED AS { NLM.aoi callRequestResponseTimer (77) };

callTimeouts ATTRIBUTE
        DERIVED FROM "GMI":nonWrapping64BitCounter;
        BEHAVIOUR callTimeouts-B BEHAVIOUR
            DEFINED AS !Counter of the number of times timer T21 expiry is experienced
                by the PLE.!;;
REGISTERED AS { NLM.aoi callTimeouts (55) };
```

Copyright International Organization for Standardization
Provided by IHS under license with ISO
No reproduction or networking permitted without license from IHS
Not for Resale

```
callsConnected ATTRIBUTE
        DERIVED FROM "GMI":nonWrapping64BitCounter;
        BEHAVIOUR callsConnected-B BEHAVIOUR
            DEFINED AS !Counter of the total number of calls which have reached the open state.!;;
REGISTERED AS { NLM.aoi callsConnected (53) };

chargingInformation ATTRIBUTE
        WITH ATTRIBUTE SYNTAX NLM.Boolean;
        MATCHES FOR EQUALITY;
        BEHAVIOUR chargingInformation-B BEHAVIOUR
            DEFINED AS !The subscription of the charging information facility
                as described in ITU-T Recommendation X.2.
                Expressed as a boolean where a value of 'True' indicates
                subscription and a value of 'False' indicates non-subscription.!;;
REGISTERED AS { NLM.aoi chargingInformation (132) };

clearCountsExceeded ATTRIBUTE
        DERIVED FROM "GMI":nonWrapping64BitCounter;
        BEHAVIOUR clearCountsExceeded-B BEHAVIOUR
            DEFINED AS !Counter associated with the clearCountExceeded event
                which generates a communications alarm notification.!;;
REGISTERED AS { NLM.aoi clearCountsExceeded (66) };

clearIndication ATTRIBUTE
        WITH ATTRIBUTE SYNTAX NLM.Integer;
        MATCHES FOR EQUALITY, ORDERING;
        BEHAVIOUR clearIndication-B BEHAVIOUR
            DEFINED AS !Value for the Clear Indication, T13 timer, in seconds.!;;
REGISTERED AS { NLM.aoi clearIndication (133) };

clearRequestResponseTimer ATTRIBUTE
        WITH ATTRIBUTE SYNTAX NLM.Integer;
        MATCHES FOR EQUALITY, ORDERING;
        BEHAVIOUR clearRequestResponseTimer-B BEHAVIOUR
            DEFINED AS !Value for Timer T23 (Clear Request Response Timer)
                in seconds.!;;
REGISTERED AS { NLM.aoi clearRequestResponseTimer (79) };

clearRequestRetransmissionCount ATTRIBUTE
        WITH ATTRIBUTE SYNTAX NLM.Integer;
        MATCHES FOR EQUALITY, ORDERING;
        BEHAVIOUR clearRequestRetransmissionCount-B BEHAVIOUR
            DEFINED AS !Value for count R23 (Clear Request Retransmission Count).!;;
REGISTERED AS { NLM.aoi clearRequestRetransmissionCount (81) };

clearTimeouts ATTRIBUTE
        DERIVED FROM "GMI":nonWrapping64BitCounter;
        BEHAVIOUR clearTimeouts-B BEHAVIOUR
            DEFINED AS !Counter of the number of times timer T23 expiry is experienced
                by the PLE.!;;
REGISTERED AS { NLM.aoi clearTimeouts (56) };

cUG ATTRIBUTE
        WITH ATTRIBUTE SYNTAX NLM.Boolean;
        MATCHES FOR EQUALITY;
        BEHAVIOUR cUG-B BEHAVIOUR
            DEFINED AS !The subscription of the closed user group facility
                as described in ITU-T Recommendation X.2. Expressed as a boolean
                where a value of 'True' indicates subscription and a value
                of 'False' indicates non-subscription.!;;
REGISTERED AS { NLM.aoi cUG (134) };

cUGWithIncomingAccess ATTRIBUTE
        WITH ATTRIBUTE SYNTAX NLM.Boolean;
        MATCHES FOR EQUALITY;
        BEHAVIOUR cUGWithIncomingAccess-B BEHAVIOUR
            DEFINED AS !The subscription of the closed user group with incoming access facility
                as described in ITU-T Recommendation X.2. Expressed as a boolean
                where a value of 'True' indicates subscription
                and a value of 'False' indicates non-subscription.!;;
REGISTERED AS { NLM.aoi cUGWithIncomingAccess (136) };
```


Copyright International Organization for Standardization
Provided by IHS under license with ISO
No reproduction or networking permitted without license from IHS
Not for Resale

```
cUGWithOutgoingAccess ATTRIBUTE
        WITH ATTRIBUTE SYNTAX NLM.Boolean;
        MATCHES FOR EQUALITY;
        BEHAVIOUR cUGWithOutgoingAccess-B BEHAVIOUR
            DEFINED AS !The subscription of the CUG with outgoing access facility
                as described in ITU-T Recommendation X.2. Expressed as a boolean
                where a value of 'True' indicates subscription
                and a value of 'False' indicates non-subscription.!;;
REGISTERED AS { NLM.aoi cUGWithOutgoingAccess (137) };

dBitModification ATTRIBUTE
        WITH ATTRIBUTE SYNTAX NLM.Boolean;
        MATCHES FOR EQUALITY;
        BEHAVIOUR dBitModification-B BEHAVIOUR
            DEFINED AS !The subscription of the D bit modification facility
                as described in ITU-T Recommendation X.2. Expressed as a boolean
                where a value of 'True' indicates subscription and a value
                of 'False' indicates non-subscription.!;;
REGISTERED AS { NLM.aoi dBitModification (139) };

dataPacketRetransmissionCount ATTRIBUTE
        WITH ATTRIBUTE SYNTAX NLM.Integer;
        MATCHES FOR EQUALITY, ORDERING;
        BEHAVIOUR dataPacketRetransmissionCount-B BEHAVIOUR
            DEFINED AS !Value for count R25 (Data Packet Retransmission Count).!;;
REGISTERED AS { NLM.aoi dataPacketRetransmissionCount (85) };

dataPacketsReceived ATTRIBUTE
        DERIVED FROM "GMI":nonWrapping64BitCounter;
        BEHAVIOUR dataPacketsReceived-B BEHAVIOUR
            DEFINED AS !Counter of the total number of data packets received.!;;
REGISTERED AS { NLM.aoi dataPacketsReceived (51) };

dataPacketsSent ATTRIBUTE
        DERIVED FROM "GMI":nonWrapping64BitCounter;
        BEHAVIOUR dataPacketsSent-B BEHAVIOUR
            DEFINED AS !Counter of the total number of data packets sent.!;;
REGISTERED AS { NLM.aoi dataPacketsSent (50) };

dataRetransmissionTimerExpiries ATTRIBUTE
        DERIVED FROM "GMI":nonWrapping64BitCounter;
        BEHAVIOUR dataRetransmissionTimerExpiries-B BEHAVIOUR
            DEFINED AS !Counter of the number of expiries of timer T25.
                Returns zero if the option is not implemented.!;;
REGISTERED AS { NLM.aoi dataRetransmissionTimerExpiries (58) };

defaultPacketSizes ATTRIBUTE
        WITH ATTRIBUTE SYNTAX NLM.BidirectionalValues;
        MATCHES FOR EQUALITY;
        BEHAVIOUR defaultPacketSizes-B BEHAVIOUR
            DEFINED AS !The default value of the packet sizes.
                A value of NULL indicates the ISO/IEC 8208 or ITU-T Rec. X.25 default value of 128. Any other
                value indicates the value agreed by the nonstandard default packet sizes facility.!;;
REGISTERED AS { NLM.aoi defaultPacketSizes (103) };

defaultThroughputClasses ATTRIBUTE
        WITH ATTRIBUTE SYNTAX NLM.BidirectionalValues;
        MATCHES FOR EQUALITY;
        BEHAVIOUR defaultThroughputClasses-B BEHAVIOUR
            DEFINED AS !The default throughput class values.
                A value of NULL indicates the normal default.
                Any other value indicates the value agreed by the
                defaultThroughputClassesAssignment facility.!;;
REGISTERED AS { NLM.aoi defaultThroughputClasses (112) };

defaultThroughputClassesAssignment ATTRIBUTE
        WITH ATTRIBUTE SYNTAX NLM.DefaultTCA;
        MATCHES FOR EQUALITY;
        BEHAVIOUR defaultThroughputClassesAssignment-B BEHAVIOUR
```

--`,,```,,,,````-`-`,,`,,`,`,,`---

Copyright International Organization for Standardization
Provided by IHS under license with ISO
No reproduction or networking permitted without license from IHS
Not for Resale

```
            DEFINED AS !The subscription of the default throughput classes assignment facility
                as described in ITU-T Recommendation X.2. Expressed as a boolean
                where a value of 'True' indicates subscription
                and a value of 'False' indicates non-subscription.!;;
REGISTERED AS { NLM.aoi defaultThroughputClassesAssignment (144) };

defaultWindowSizes ATTRIBUTE

        WITH ATTRIBUTE SYNTAX NLM.BidirectionalValues;
        MATCHES FOR EQUALITY;
        BEHAVIOUR defaultWindowSizes-B BEHAVIOUR
            DEFINED AS !The default value of the window sizes.
                A value of NULL indicates the ITU-T Recommendation | International
                Standard default value of 2. Any other value indicates
                the value agreed by the nonstandard default window sizes facility.!;;
REGISTERED AS { NLM.aoi defaultWindowSizes (104) };

extendedPacketSequenceNumbering ATTRIBUTE

        WITH ATTRIBUTE SYNTAX NLM.PacketSequencing;
        MATCHES FOR EQUALITY;
        BEHAVIOUR extendedPacketSequenceNumbering-B BEHAVIOUR
            DEFINED AS !The modulo of the packet sequence number space.
                Expressed as an integer. The ITU-T Recommendation | International
                Standard only requires support for at least one of
                the two values 8 and 128, but it is possible
                that some future revision may extend the range. A system is only
                required to support the setting of values which are also required
                by the protocol standard. A system shall return an error when an
                attempt is made to set the value to a value which is not supported
                by that system.!;;
REGISTERED AS { NLM.aoi extendedPacketSequenceNumbering (49) };

fastSelectAcceptance ATTRIBUTE

        WITH ATTRIBUTE SYNTAX NLM.Boolean;
        MATCHES FOR EQUALITY;
        BEHAVIOUR fastSelectAcceptance-B BEHAVIOUR
            DEFINED AS !The subscription of the fast select acceptance
                as described in ITU-T Recommendation X.2. Expressed as a boolean
                where a value of 'True' indicates subscription and a value
                of 'False' indicates non-subscription.!;;
REGISTERED AS { NLM.aoi fastSelectAcceptance (145) };

flowControlParameterNegotiation ATTRIBUTE

        WITH ATTRIBUTE SYNTAX NLM.Boolean;
        MATCHES FOR EQUALITY;
        BEHAVIOUR flowControlParameterNegotiation-B BEHAVIOUR
            DEFINED AS !The subscription of the flow control parameter negotiation facility
                as described in ITU-T Recommendation X.2.
                When this has the value 'true', the use of flow control
                parameter negotiation (by specifying values for the window
                and packet size in call request and accept packets) is
                permitted. When it has the value 'false', no such values
                shall be specified in call request and accept packets, and
                any values specified in an IVMO or via an internal interface
                shall be ignored.!;;
REGISTERED AS { NLM.aoi flowControlParameterNegotiation (119) };

huntGroup ATTRIBUTE

        WITH ATTRIBUTE SYNTAX NLM.Boolean;
        MATCHES FOR EQUALITY;
        BEHAVIOUR huntGroup-B BEHAVIOUR
            DEFINED AS !The subscription of the hunt group facility
                as described in ITU-T Recommendation X.2. Expressed as a boolean
                where a value of 'True' indicates subscription and a value
                of 'False' indicates non-subscription.!;;
REGISTERED AS { NLM.aoi huntGroup (146) };
```


Copyright International Organization for Standardization
Provided by IHS under license with ISO
No reproduction or networking permitted without license from IHS
Not for Resale

```
incomingCall ATTRIBUTE
        WITH ATTRIBUTE SYNTAX NLM.Integer;
        MATCHES FOR EQUALITY, ORDERING;
        BEHAVIOUR incomingCall-B BEHAVIOUR
            DEFINED AS !Value for the Incoming Call, T11 timer, in seconds.!;;
REGISTERED AS { NLM.aoi incomingCall (147) };

incomingCallBarredWithinCUG ATTRIBUTE
        WITH ATTRIBUTE SYNTAX NLM.Boolean;
        MATCHES FOR EQUALITY;
        BEHAVIOUR incomingCallBarredWithinCUG-B BEHAVIOUR
            DEFINED AS !The subscription of the incoming call barred within a CUG facility
                as described in ITU-T Recommendation X.2. Expressed as a boolean
                where a value of 'True' indicates subscription and
                a value of 'False' indicates non-subscription.!;;
REGISTERED AS { NLM.aoi incomingCallBarredWithinCUG (149) };

incomingCallsBarred ATTRIBUTE
        WITH ATTRIBUTE SYNTAX NLM.Boolean;
        MATCHES FOR EQUALITY;
        BEHAVIOUR incomingCallsBarred-B BEHAVIOUR
            DEFINED AS !The subscription of the incoming calls barred facility
                as described in ITU-T Recommendation X.2. Expressed as a boolean
                where a value of 'True' indicates subscription and a value
                of 'False' indicates non-subscription.!;;
REGISTERED AS { NLM.aoi incomingCallsBarred (148) };

interruptPacketsReceived ATTRIBUTE
        DERIVED FROM "GMI":nonWrapping64BitCounter;
        BEHAVIOUR interruptPacketsReceived-B BEHAVIOUR
            DEFINED AS !Counter of the number of interrupt packets received
                by the PLE or over the PVC/VC.!;;
REGISTERED AS { NLM.aoi interruptPacketsReceived (68) };

interruptPacketsSent ATTRIBUTE
        DERIVED FROM "GMI":nonWrapping64BitCounter;
        BEHAVIOUR interruptPacketsSent-B BEHAVIOUR
            DEFINED AS !Counter of the number of interrupt packets sent
                by the PLE or over the PVC/VC.!;;
REGISTERED AS { NLM.aoi interruptPacketsSent (67) };

interruptResponseTimer ATTRIBUTE
        WITH ATTRIBUTE SYNTAX NLM.Integer;
        MATCHES FOR EQUALITY, ORDERING;
        BEHAVIOUR interruptResponseTimer-B BEHAVIOUR
            DEFINED AS !Value for Timer T26 (Interrupt Response Timer) in seconds.!;;
REGISTERED AS { NLM.aoi interruptResponseTimer (82) };

interruptTimerExpiries ATTRIBUTE
        DERIVED FROM "GMI":nonWrapping64BitCounter;
        BEHAVIOUR interruptTimerExpiries-B BEHAVIOUR
            DEFINED AS !Counter of the number of expiries of timer T26
                experienced by the PLE or over the PVC/VC.!;;
REGISTERED AS { NLM.aoi interruptTimerExpiries (69) };

localChargingPrevention ATTRIBUTE
        WITH ATTRIBUTE SYNTAX NLM.Boolean;
        MATCHES FOR EQUALITY;
        BEHAVIOUR localChargingPrevention-B BEHAVIOUR
            DEFINED AS !The subscription of the local charging prevention facility
                as described in ITU-T Recommendation X.2. Expressed as a boolean
                where a value of 'True' indicates subscription and a value
                of 'False' indicates non-subscription.!;;
REGISTERED AS { NLM.aoi localChargingPrevention (150) };

localDTEAddress ATTRIBUTE
        WITH ATTRIBUTE SYNTAX NLM.DTEAddress;
        MATCHES FOR EQUALITY;
        BEHAVIOUR localDTEAddress-B BEHAVIOUR
```


Copyright International Organization for Standardization
Provided by IHS under license with ISO
No reproduction or networking permitted without license from IHS
Not for Resale

```
            DEFINED AS !The full DTE address of this PLE
                expressed as an X.121, E.164, etc. address.!;;
REGISTERED AS { NLM.aoi localDTEAddress (39) };

logicalChannelAssignments ATTRIBUTE
        WITH ATTRIBUTE SYNTAX NLM.LogicalChannelAssignments;
        MATCHES FOR EQUALITY;
        BEHAVIOUR logicalChannelAssignments-B BEHAVIOUR
            DEFINED AS !Represents the logical channel assignments of this PLE,
                expressed as a four-tuple where the values represent
                    the set (with maximum permitted cardinality (LIC - 1), minimum required
                      cardinality of zero) of PVC channels (with maximum value (LIC - 1),
                      and minimum value 1) assigned,
                    the incoming channel range,
                    the two-way channel range,
                    the outgoing channel range,
                respectively.
                The presence of each of the ranges shall be optional. Absence of a particular range
                shall signify that there are no channels of that type assigned. Within each range, the
                low value shall be less than or equal to the high value, and there shall be no value in any
                set or range which is greater than or equal to a value in a subsequent range when ordered
                as above.
                This attribute is subject to the rules for logical assignments described in 3.7 of
                ISO/IEC 8208 or ITU-T Rec. X.25.!;;
REGISTERED AS { NLM.aoi logicalChannelAssignments (48) };

maxActiveCircuits ATTRIBUTE
        WITH ATTRIBUTE SYNTAX NLM.MaxActiveCircuits;
        MATCHES FOR EQUALITY, ORDERING;
        BEHAVIOUR maxActiveCircuits-B BEHAVIOUR
            DEFINED AS !The maximum number of active circuits permitted on this PLE.
                When the NULL value is specified, the maximum number of active circuits
                shall be limited only by the resources available to the entity.!;;
REGISTERED AS { NLM.aoi maxActiveCircuits (41) };

minimumRecallTimer ATTRIBUTE
        WITH ATTRIBUTE SYNTAX NLM.Integer;
        MATCHES FOR EQUALITY, ORDERING;
        BEHAVIOUR minimumRecallTimer-B BEHAVIOUR
            DEFINED AS !Minimum time in seconds before recall permitted.
                This timer determines the minimum interval (in seconds) which shall elapse
                following an unsuccessful first call attempt before a subsequent call attempt is
                permitted.!;;
REGISTERED AS { NLM.aoi minimumRecallTimer (43) };

nonStandardDefaultPacketSizes ATTRIBUTE
        WITH ATTRIBUTE SYNTAX NLM.NonStandardDPS;
        MATCHES FOR EQUALITY;
        BEHAVIOUR nonStandardDefaultPacketSizes-B BEHAVIOUR
            DEFINED AS !The subscription of the non standard default packet sizes facility
                as described in ITU-T Recommendation X.2. Expressed as a boolean
                where a value of 'True' indicates subscription
                and a value of 'False' indicates non-subscription.!;;
REGISTERED AS { NLM.aoi nonStandardDefaultPacketSizes (151) };

nonStandardDefaultWindowSizes ATTRIBUTE
        WITH ATTRIBUTE SYNTAX NLM.NonStandardDWS;
        MATCHES FOR EQUALITY;
        BEHAVIOUR nonStandardDefaultWindowSizes-B BEHAVIOUR
            DEFINED AS !The subscription of the non standard default window sizes facility
                as described in ITU-T Recommendation X.2. Expressed as a boolean
                where a value of 'True' indicates subscription
                and a value of 'False' indicates non-subscription.!;;
REGISTERED AS { NLM.aoi nonStandardDefaultWindowSizes (152) };

nUIOverride ATTRIBUTE
        WITH ATTRIBUTE SYNTAX NLM.Boolean;
        MATCHES FOR EQUALITY;
        BEHAVIOUR nUIOverride-B BEHAVIOUR
```


Copyright International Organization for Standardization
Provided by IHS under license with ISO
No reproduction or networking permitted without license from IHS
Not for Resale

```
            DEFINED AS !The subscription of the NUI override facility
                as described in ITU-T Recommendation X.2. Expressed as a boolean
                where a value of 'True' indicates subscription and a value
                of 'False' indicates non-subscription.!;;
REGISTERED AS { NLM.aoi nUIOverride (154) };

nUISubscription ATTRIBUTE
        WITH ATTRIBUTE SYNTAX NLM.Boolean;
        MATCHES FOR EQUALITY;
        BEHAVIOUR nUISubscription-B BEHAVIOUR
            DEFINED AS !The subscription of the NUI subscription facility
                as described in ITU-T Recommendation X.2. Expressed as a boolean
                where a value of 'True' indicates subscription and a value
                of 'False' indicates non-subscription.!;;
REGISTERED AS { NLM.aoi nUISubscription (153) };

oneWayLogicalChannelIncoming ATTRIBUTE
        WITH ATTRIBUTE SYNTAX NLM.Boolean;
        MATCHES FOR EQUALITY;
        BEHAVIOUR oneWayLogicalChannelIncoming-B BEHAVIOUR
            DEFINED AS !The subscription of the one way logical channel incoming facility
                as described in ITU-T Recommendation X.2. Expressed as a boolean
                where a value of 'True' indicates subscription
                and a value of 'False' indicates non-subscription.!;;
REGISTERED AS { NLM.aoi oneWayLogicalChannelIncoming (156) };

oneWayLogicalChannelOutgoing ATTRIBUTE
        WITH ATTRIBUTE SYNTAX NLM.Boolean;
        MATCHES FOR EQUALITY;
        BEHAVIOUR oneWayLogicalChannelOutgoing-B BEHAVIOUR
            DEFINED AS !The subscription of the one way logical channel outgoing facility
                as described in ITU-T Recommendation X.2. Expressed as a boolean
                where a value of 'True' indicates subscription
                and a value of 'False' indicates non-subscription.!;;
REGISTERED AS { NLM.aoi oneWayLogicalChannelOutgoing (157) };

onlineFacilityRegistration ATTRIBUTE
        WITH ATTRIBUTE SYNTAX NLM.Boolean;
        MATCHES FOR EQUALITY;
        BEHAVIOUR onlineFacilityRegistration-B BEHAVIOUR
            DEFINED AS !The subscription of the on-line facility registration facility
                as described in ITU-T Recommendation X.2. Expressed as a boolean
                where a value of 'True' indicates subscription
                and a value of 'False' indicates non subscription.!;;
REGISTERED AS { NLM.aoi onlineFacilityRegistration (158) };

outgoingCallBarredWithinCUG ATTRIBUTE
        WITH ATTRIBUTE SYNTAX NLM.Boolean;
        MATCHES FOR EQUALITY;
        BEHAVIOUR outgoingCallBarredWithinCUG-B BEHAVIOUR
            DEFINED AS !The subscription of the outgoing call barred within a CUG facility
                as described in ITU-T Recommendation X.2. Expressed as a boolean
                where a value of 'True' indicates subscription
                and a value of 'False' indicates non-subscription.!;;
REGISTERED AS { NLM.aoi outgoingCallBarredWithinCUG (160) };

outgoingCallsBarred ATTRIBUTE
        WITH ATTRIBUTE SYNTAX NLM.Boolean;
        MATCHES FOR EQUALITY;
        BEHAVIOUR outgoingCallsBarred-B BEHAVIOUR
            DEFINED AS !The subscription of the outgoing calls barred facility
                as described in ITU-T Recommendation X.2. Expressed as a boolean
                where a value of 'True' indicates subscription and a value
                of 'False' indicates non-subscription.!;;
REGISTERED AS { NLM.aoi outgoingCallsBarred (159) };

packetRetransmission ATTRIBUTE
        WITH ATTRIBUTE SYNTAX NLM.Boolean;
        MATCHES FOR EQUALITY;
        BEHAVIOUR packetRetransmission-B BEHAVIOUR
```


Copyright International Organization for Standardization
Provided by IHS under license with ISO
No reproduction or networking permitted without license from IHS
Not for Resale

```
            DEFINED AS !The subscription of the packet retransmissions facility
                as described in ITU-T Recommendation X.2. Expressed as a boolean
                where a value of 'True' indicates subscription and a value
                of 'False' indicates non-subscription. If non-subscription,
                then the attributes for rejectTimer and rejectCount
                will have NULL values.!;;
REGISTERED AS { NLM.aoi packetRetransmission (161) };

protocolErrorsAccusedOf ATTRIBUTE
        DERIVED FROM "GMI":nonWrapping64BitCounter;
        BEHAVIOUR protocolErrorsAccusedOf-B BEHAVIOUR
            DEFINED AS !Counter associated with the accusedOfProtocolError event
                which generates a communications alarm notification.!;;
REGISTERED AS { NLM.aoi protocolErrorsAccusedOf (64) };

protocolErrorsDetectedLocally ATTRIBUTE
        DERIVED FROM "GMI":nonWrapping64BitCounter;
        BEHAVIOUR protocolErrorsDetectedLocally-B BEHAVIOUR
            DEFINED AS !Counter associated with the protocolErrorDetectedLocally event
                which generates a communications alarm notification.!;;
REGISTERED AS { NLM.aoi protocolErrorsDetectedLocally (63) };

protocolVersionSupported ATTRIBUTE
        WITH ATTRIBUTE SYNTAX NLM.ProtocolVersion;
        MATCHES FOR EQUALITY;
        BEHAVIOUR protocolVersionSupported-B BEHAVIOUR
            DEFINED AS !The supported ITU-T Recommendation | International Standard protocol version
                available on the PLE interface.!;;
REGISTERED AS { NLM.aoi protocolVersionSupported (38) };

providerInitiatedDisconnects ATTRIBUTE
        DERIVED FROM "GMI":nonWrapping64BitCounter;
        BEHAVIOUR providerInitiatedDisconnects-B BEHAVIOUR
            DEFINED AS !Counter for the providerInitiatedDisconnect events
                which generate communication alarm notifications.!;;
REGISTERED AS { NLM.aoi providerInitiatedDisconnects (54) };

providerInitiatedResets ATTRIBUTE
        DERIVED FROM "GMI":nonWrapping64BitCounter;
        BEHAVIOUR providerInitiatedResets-B BEHAVIOUR
            DEFINED AS !Counter associated with the providerInitiatedReset event
                which generates a communication alarm notification.!;;
REGISTERED AS { NLM.aoi providerInitiatedResets (59) };

rOASubscription ATTRIBUTE
        WITH ATTRIBUTE SYNTAX NLM.Boolean;
        MATCHES FOR EQUALITY;
        BEHAVIOUR rOASubscription-B BEHAVIOUR
            DEFINED AS !The subscription of the ROA Subscription facility
                as described in ITU-T Recommendation X.2. Expressed as a boolean
                where a value of 'True' indicates subscription and a value
                of 'False' indicates non-subscription.!;;
REGISTERED AS { NLM.aoi rOASubscription (167) };

registrationPermitted ATTRIBUTE
        WITH ATTRIBUTE SYNTAX NLM.Boolean;
        MATCHES FOR EQUALITY;
        BEHAVIOUR registrationPermitted-B BEHAVIOUR
            DEFINED AS !When true, the use of online facility registration is permitted.!;;
REGISTERED AS { NLM.aoi registrationPermitted (105) };

registrationRequestResponseTimer ATTRIBUTE
        WITH ATTRIBUTE SYNTAX NLM.Integer;
        MATCHES FOR EQUALITY, ORDERING;
        BEHAVIOUR registrationRequestResponseTimer-B BEHAVIOUR
            DEFINED AS !Value for Timer T28 (Registration Request Response Timer) in seconds.!;;
REGISTERED AS { NLM.aoi registrationRequestResponseTimer (44) };

registrationRequestRetransmissionCount ATTRIBUTE
        WITH ATTRIBUTE SYNTAX NLM.Integer;
        MATCHES FOR EQUALITY, ORDERING;
        BEHAVIOUR registrationRequestRetransmissionCount-B BEHAVIOUR
```


Copyright International Organization for Standardization
Provided by IHS under license with ISO
No reproduction or networking permitted without license from IHS
Not for Resale

```
            DEFINED AS !Value for count R28 (Registration Request Retransmission Count).!;;
REGISTERED AS { NLM.aoi registrationRequestRetransmissionCount (46) };

rejectResponseTimer ATTRIBUTE
        WITH ATTRIBUTE SYNTAX NLM.Integer;
        MATCHES FOR EQUALITY, ORDERING;
        BEHAVIOUR rejectResponseTimer-B BEHAVIOUR
            DEFINED AS !Value for Timer T27 (Reject Response Timer) in seconds.!;;
REGISTERED AS { NLM.aoi rejectResponseTimer (86) };

rejectRetransmissionCount ATTRIBUTE
        WITH ATTRIBUTE SYNTAX NLM.Integer;
        MATCHES FOR EQUALITY, ORDERING;
        BEHAVIOUR rejectRetransmissionCount-B BEHAVIOUR
            DEFINED AS !Value for count R27 (Reject Retransmission Count).!;;
REGISTERED AS { NLM.aoi rejectRetransmissionCount (87) };

remotelyInitiatedResets ATTRIBUTE
        DERIVED FROM "GMI":nonWrapping64BitCounter;
        BEHAVIOUR remotelyInitiatedResets-B BEHAVIOUR
            DEFINED AS !Counter associated with the remotelyInitiatedReset event
                which generates a communication alarm notification.!;;
REGISTERED AS { NLM.aoi remotelyInitiatedResets (57) };

remotelyInitiatedRestarts ATTRIBUTE
        DERIVED FROM "GMI":nonWrapping64BitCounter;
        BEHAVIOUR remotelyInitiatedRestarts-B BEHAVIOUR
            DEFINED AS !Counter of the number of remotely initiated restarts.
                This is the total number of remotely initiated (including provider initiated) restarts
                experienced by the PLE, excluding the
                restart associated with bringing up the PLE interface.!;;
REGISTERED AS { NLM.aoi remotelyInitiatedRestarts (61) };

resetIndication ATTRIBUTE
        WITH ATTRIBUTE SYNTAX NLM.Integer;
        MATCHES FOR EQUALITY, ORDERING;
        BEHAVIOUR resetIndication-B BEHAVIOUR
            DEFINED AS !Value for the Reset Indication, T12 timer, in seconds.!;;
REGISTERED AS { NLM.aoi resetIndication (163) };

resetRequestResponseTimer ATTRIBUTE
        WITH ATTRIBUTE SYNTAX NLM.Integer;
        MATCHES FOR EQUALITY, ORDERING;
        BEHAVIOUR resetRequestResponseTimer-B BEHAVIOUR
            DEFINED AS !Value for Timer T22 (Reset Request Response Timer) in seconds.!;;
REGISTERED AS { NLM.aoi resetRequestResponseTimer (78) };

resetRequestRetransmissionCount ATTRIBUTE
        WITH ATTRIBUTE SYNTAX NLM.Integer;
        MATCHES FOR EQUALITY, ORDERING;
        BEHAVIOUR resetRequestRetransmissionCount-B BEHAVIOUR
            DEFINED AS !Value for count R22 (Reset Request Retransmission Count).!;;
REGISTERED AS { NLM.aoi resetRequestRetransmissionCount (80) };

resetTimeouts ATTRIBUTE
        DERIVED FROM "GMI":nonWrapping64BitCounter;
        BEHAVIOUR resetTimeouts-B BEHAVIOUR
            DEFINED AS !Counter of the number of timer T22 expiries experienced
                by the PLE.!;;
REGISTERED AS { NLM.aoi resetTimeouts (60) };

restartCountsExceeded ATTRIBUTE
        DERIVED FROM "GMI":nonWrapping64BitCounter;
        BEHAVIOUR restartCountsExceeded-B BEHAVIOUR
            DEFINED AS !Counter associated with the restartCountExceeded event
                which generates a communication alarm notification.!;;
REGISTERED AS { NLM.aoi restartCountsExceeded (62) };

restartIndication ATTRIBUTE
        WITH ATTRIBUTE SYNTAX NLM.Integer;
        MATCHES FOR EQUALITY, ORDERING;
        BEHAVIOUR restartIndication-B BEHAVIOUR
```


Copyright International Organization for Standardization
Provided by IHS under license with ISO
No reproduction or networking permitted without license from IHS
Not for Resale

```
            DEFINED AS !Value for the Restart Indication, T10 timer, in seconds.!;;
REGISTERED AS { NLM.aoi restartIndication (164) };

restartRequestResponseTimer ATTRIBUTE
        WITH ATTRIBUTE SYNTAX NLM.Integer;
        MATCHES FOR EQUALITY, ORDERING;
        BEHAVIOUR restartRequestResponseTimer-B BEHAVIOUR
            DEFINED AS !Value for Timer T20 (Restart Request Response Timer) in seconds.!;;
REGISTERED AS { NLM.aoi restartRequestResponseTimer (42) };

restartRequestRetransmissionCount ATTRIBUTE
        WITH ATTRIBUTE SYNTAX NLM.Integer;
        MATCHES FOR EQUALITY, ORDERING;
        BEHAVIOUR restartRequestRetransmissionCount-B BEHAVIOUR
            DEFINED AS !Value for count R20 (Restart Request Retransmission Count).!;;
REGISTERED AS { NLM.aoi restartRequestRetransmissionCount (45) };

reverseChargingAcceptance ATTRIBUTE
        WITH ATTRIBUTE SYNTAX NLM.Boolean;
        MATCHES FOR EQUALITY;
        BEHAVIOUR reverseChargingAcceptance-B BEHAVIOUR
            DEFINED AS !The subscription of the reverse charging acceptance facility
                as described in ITU-T Recommendation X.2. Expressed as a boolean
                where a value of 'True' indicates subscription
                and a value of 'False' indicates non-subscription.!;;
REGISTERED AS { NLM.aoi reverseChargingAcceptance (165) };

throughputClassNegotiation ATTRIBUTE
        WITH ATTRIBUTE SYNTAX NLM.Boolean;
        MATCHES FOR EQUALITY;
        BEHAVIOUR throughputClassNegotiation-B BEHAVIOUR
            DEFINED AS !The subscription of the throughput class negotiation facility
                as described in ITU-T Recommendation X.2. Expressed as a boolean
                where a value of 'True' indicates subscription
                and a value of 'False' indicates non-subscription.!;;
REGISTERED AS { NLM.aoi throughputClassNegotiation (168) };

windowRotationTimer ATTRIBUTE
        WITH ATTRIBUTE SYNTAX NLM.Integer;
        MATCHES FOR EQUALITY, ORDERING;
        BEHAVIOUR windowRotationTimer-B BEHAVIOUR
            DEFINED AS !Default for Timer T25 (Window Rotation Timer) in seconds.!;;
REGISTERED AS { NLM.aoi windowRotationTimer (84) };

windowStatusTransmissionTimer ATTRIBUTE
        WITH ATTRIBUTE SYNTAX NLM.Integer;
        MATCHES FOR EQUALITY, ORDERING;
        BEHAVIOUR windowStatusTransmissionTimer-B BEHAVIOUR
            DEFINED AS !Value for Timer T24 (Window Status Transmission Timer) in seconds.!;;
REGISTERED AS { NLM.aoi windowStatusTransmissionTimer (83) };

x25PLEId ATTRIBUTE
        WITH ATTRIBUTE SYNTAX NLM.GraphicStringBase;
        MATCHES FOR EQUALITY, SUBSTRINGS;
        BEHAVIOUR x25PLEId-B BEHAVIOUR
            DEFINED AS !The name of this instance of x25PLE MO.!;;
REGISTERED AS { NLM.aoi x25PLEId (36) };

x25PLEMode ATTRIBUTE
        WITH ATTRIBUTE SYNTAX NLM.X25PLEMode;
        MATCHES FOR EQUALITY;
        BEHAVIOUR x25PLEMode-B BEHAVIOUR
            DEFINED AS !The DCE/DTE mode in which the X.25 PLE is currently operating.
                One of the following modes of operation may be indicated.
                (0) DTE mode applying to both ITU-T  Rec. X.25 and ISO/IEC 8208 operation,
                (1) DCE mode applying to ITU-T  Rec. X.25 operation only, and
                (2) DTE acting as a DCE applying to ISO/IEC 8208 operation only.!;;
REGISTERED AS { NLM.aoi x25PLEMode (120) };
```


Copyright International Organization for Standardization
Provided by IHS under license with ISO
No reproduction or networking permitted without license from IHS
Not for Resale

```
x25PLEIVMOId ATTRIBUTE
        WITH ATTRIBUTE SYNTAX NLM.GraphicStringBase;
        MATCHES FOR EQUALITY, SUBSTRINGS;
        BEHAVIOUR x25PLEIVMOId-B BEHAVIOUR
            DEFINED AS !The name of this instance of x25PLE IVMO.!;;
REGISTERED AS { NLM.aoi x25PLEIVMOId (37) };

x25SegmentsReceived ATTRIBUTE
        DERIVED FROM "GMI":nonWrapping64BitCounter;
        MATCHES FOR EQUALITY, ORDERING;
        BEHAVIOUR x25SegmentsReceived-B BEHAVIOUR
            DEFINED AS !Value for count of X.25 Segments Received.!;;
REGISTERED AS { NLM.aoi x25SegmentsReceived (171) };

x25SegmentsSent ATTRIBUTE
        DERIVED FROM "GMI":nonWrapping64BitCounter;
        MATCHES FOR EQUALITY, ORDERING;
        BEHAVIOUR x25SegmentsSent-B BEHAVIOUR
            DEFINED AS !Value for count of X.25 Segments Sent.!;;
REGISTERED AS { NLM.aoi x25SegmentsSent (170) };

-- Parameters

notificationData PARAMETER
        CONTEXT EVENT-INFO;
        WITH SYNTAX NLM.NotificationDataSyntax;
        BEHAVIOUR notificationData-B BEHAVIOUR
            DEFINED AS !Information relating to the call
                which resulted in the notification.!;;
REGISTERED AS { NLM.proi notificationData (7) };
```

5.11 The virtual circuit and related managed objects

5.11.1 The virtual managed object

```
-- This MO Class is never instantiated. It serves as a generic Virtual Circuit MO from which both the
-- Virtual Circuit DTE and Virtual Circuit DCE MOs are derived.
-- Note that the values of the virtualCircuitId naming attribute are
-- required to be unique across all instances of MOs derived from this
-- which have a common superior.

virtualCircuit MANAGED OBJECT CLASS
        DERIVED FROM "DMI":top;
        CHARACTERIZED BY virtualCircuit-P PACKAGE
            BEHAVIOUR
                commonCreationDeletion-B,
                virtualCircuitNaming-B;
            ATTRIBUTES
                virtualCircuitId GET,
                logicalChannel GET,
                packetSizes GET,
                throughputClasses GET,
                windowSizes GET;
            NOTIFICATIONS
                "DMI":objectCreation,
                "DMI":objectDeletion;
            ;;
REGISTERED AS { NLM.moi virtualCircuit (14) };
```

5.11.2 The virtual circuit DTE managed object

```
-- This MO Class is never instantiated. It serves as a generic Virtual Circuit DTE MO from which both the
-- Virtual Call DTE and the Permanent Virtual Circuit DTE MOs are derived.
-- Note that the values of the virtualCircuitId naming attribute are
-- required to be unique across all instances of MOs derived from this
-- which have a common superior.
```


Copyright International Organization for Standardization
Provided by IHS under license with ISO
No reproduction or networking permitted without license from IHS
Not for Resale

```
virtualCircuit-DTE MANAGED OBJECT CLASS

        DERIVED FROM virtualCircuit;
        CONDITIONAL PACKAGES
        dTEVirtualCircuitCounters-P
        PRESENT IF !the instance supports the dTEVirtualCircuitCounters
            capabilities!;
REGISTERED AS { NLM.moi virtualCircuit-DTE (18) };
```

5.11.3 The virtual circuit DCE managed object

```
-- This MO Class is never instantiated. It serves as a generic Virtual Circuit DCE MO from which both the
-- Virtual Call DCE and the Permanent Virtual Circuit DCE MOs are derived.
-- Note that the values of the virtualCircuitId naming attribute are
-- required to be unique across all instances of MOs derived from this
-- which have a common superior.

virtualCircuit-DCE MANAGED OBJECT CLASS

        DERIVED FROM virtualCircuit;
            CONDITIONAL PACKAGES
                dCECommonVirtualCircuitCounters-P
                    PRESENT IF !the instance supports the dCECommonVirtualCircuitCounters capabilities
        !;
REGISTERED AS { NLM.moi virtualCircuit-DCE (29) };
```

5.11.4 The permanent virtual circuit DTE managed object

```
-- An instance of this MO exists for each Permanent Virtual Circuit.
-- It may be both created and deleted by management.

permanentVirtualCircuit-DTE MANAGED OBJECT CLASS

        DERIVED FROM virtualCircuit-DTE;
        CHARACTERIZED BY permanentVirtualCircuit-DTE-P PACKAGE
            BEHAVIOUR permanentVirtualCircuit-DTE-P-B BEHAVIOUR
                DEFINED AS !When the MO is created, the protocol machine
                    shall be reinitialized and a reset PDU with a cause
                    code of DTE originated (encoded as 00000000) and a
                    diagnostic code of DTE operational (161) shall be
                    transmitted. When the MO is deleted, the protocol machine
                    shall be reinitialized and a reset PDU with a cause
                    code of DTE originated (encoded as 00000000) and a
                    diagnostic code of DTE not operational (162) shall be
                    transmitted.!;;
            ATTRIBUTES
                logicalChannel INITIAL VALUE DERIVATION RULE logicalChannelIV-B,
                packetSizes INITIAL VALUE DERIVATION RULE optionalCMIPIV-B,
                throughputClasses INITIAL VALUE DERIVATION RULE optionalCMIPIV-B,
                windowSizes INITIAL VALUE DERIVATION RULE optionalCMIPIV-B;
        ;;
REGISTERED AS { NLM.moi permanentVirtualCircuit-DTE (19) };
```

5.11.5 The permanent virtual circuit DCE managed object

```
-- An instance of this MO exists for each Permanent Virtual Circuit. It may be both created and
-- deleted by management.

permanentVirtualCircuit-DCE MANAGED OBJECT CLASS

        DERIVED FROM virtualCircuit-DCE;
        CHARACTERIZED BY permanentVirtualCircuit-DCE-P PACKAGE
            BEHAVIOUR permanentVirtualCircuit-DCE-P-B BEHAVIOUR
```


Copyright International Organization for Standardization
Provided by IHS under license with ISO
No reproduction or networking permitted without license from IHS
Not for Resale

```
                    DEFINED AS !When the MO is created, the protocol machine shall be re-initialized
                      and a reset PDU shall be transmitted. A cause code of remote DTE Operational
                      (encoded as X000 1001) or Network Operational (encoded as X000 1111) may,
                      for example, be included. When the MO is deleted the protocol machine shall
                      be reinitialized and a reset PDU shall be transmitted. A cause code of
                      Out of Order (encoded as X000 0001) or Network Out of Order
                      (encoded as X001 1101) may, for example, be included.!;,
                commonStateChange-B;

            ATTRIBUTES
                chargingDirection GET,
                logicalChannel INITIAL VALUE DERIVATION RULE logicalChannelIV-B,
                packetSizes INITIAL VALUE DERIVATION RULE optionalCMIPIV-B,
                throughputClasses INITIAL VALUE DERIVATION RULE optionalCMIPIV-B,
                windowSizes INITIAL VALUE DERIVATION RULE optionalCMIPIV-B,
                "DMI":operationalState GET,
                remoteDTEAddress GET,
                remoteLogicalChannel GET;
            ATTRIBUTE GROUPS
                "DMI":state
                    "DMI":operationalState;
            NOTIFICATIONS
                "DMI":stateChange;
        ;;
REGISTERED AS { NLM.moi permanentVirtualCircuit-DCE (30) };
```

5.11.6 The virtual call initial values managed object

```
-- There may be multiple instances of the virtualCallIVMO in a system.
-- A virtualCallIVMO may be used to supply initial
-- values for the attributes of the virtualCall-DTE or virtualCall-DCE MO.
-- Different instances of virtualCallIVMO may contain different initial values.
--
-- Its definition permits it to be created and deleted explicitly by
-- management operation.

virtualCallIVMO MANAGED OBJECT CLASS
        DERIVED FROM "DMI":top;
        CHARACTERIZED BY virtualCallIVMO-P PACKAGE
            BEHAVIOUR commonCreationDeletion-B;
            ATTRIBUTES
                virtualCallIVMOId GET,
                fastSelect REPLACE-WITH-DEFAULT
                    GET-REPLACE,
                packetSizes REPLACE-WITH-DEFAULT
                    GET-REPLACE,
                reverseCharging REPLACE-WITH-DEFAULT
                    GET-REPLACE,
                throughputClasses REPLACE-WITH-DEFAULT
                    GET-REPLACE,
                windowSizes REPLACE-WITH-DEFAULT
                    GET-REPLACE;
            NOTIFICATIONS
                "DMI":objectCreation,
                "DMI":objectDeletion;
            ;;
REGISTERED AS { NLM.moi virtualCallIVMO (15) };
```

5.11.7 The virtual call DTE managed object

```
-- An instance of this MO exists for each Virtual Call. It is not created by
-- management, but by the operation of the protocol state machine.
-- An existing instance may, however, be deactivated by management action,
-- which will cause the associated VC to be cleared.
--
-- An instance of this MO is created and exists as long as real resources
-- are consumed by the existence of the virtual call. It is an implementation
-- matter to determine the point during call establishment when real
-- resources are consumed, and conversely, when during call clearing,
-- when they are released.
```


Copyright International Organization for Standardization
Provided by IHS under license with ISO
No reproduction or networking permitted without license from IHS
Not for Resale

```
virtualCall-DTE MANAGED OBJECT CLASS
        DERIVED FROM virtualCircuit-DTE;
        CHARACTERIZED BY virtualCall-DTE-P PACKAGE
            BEHAVIOUR
                deactivateConnection-B,
                successfulConnectionEstablishment-B;
            ATTRIBUTES
                callingAddressExtension GET,
                calledAddressExtension GET,
                direction GET,
                fastSelect GET,
                originallyCalledAddress GET,
                redirectReason GET,
                remoteDTEAddress GET,
                reverseCharging GET;
            ACTIONS
                "GMI":deactivate;
            NOTIFICATIONS
                "GMI":communicationsInformation;
        ;;
REGISTERED AS { NLM.moi virtualCall-DTE (16) };
```

5.11.8 The virtual call DCE managed object

```
-- An instance of this MO is created and exists as long as real resources are consumed by the existence
-- of the Virtual Call. It is an implementation matter to determine the point during a call establishment
-- when real resources are consumed, and conversely, when during call clearing, when they are released.


virtualCall-DCE MANAGED OBJECT CLASS
        DERIVED FROM virtualCircuit-DCE;
        CHARACTERIZED BY virtualCall-DCE-P PACKAGE
            BEHAVIOUR
                deactivateConnection-B,
                successfulConnectionEstablishment-B;
            ATTRIBUTES
                chargingDirection GET,
                cUGSelection GET,
                direction GET,
                fastSelect GET,
                remoteDTEAddress GET,
                transitDelaySelectionAndIndication GET;
            ACTIONS
                "GMI":deactivate;
            NOTIFICATIONS
                "GMI":communicationsInformation;
            ;;
        CONDITIONAL PACKAGES
            dCEVirtualCallFacilities-P
                PRESENT IF !the instance supports the dCEVirtualCallFacilities capabilities!;
REGISTERED AS { NLM.moi virtualCall-DCE (31) };
```

5.11.9 The Recommendation D Series counts managed object

```
-- There is one instance of this MO created by management action or
-- automatically for each instance of a virtual call where the Tariff
-- Principles applying to Data Communications Services over dedicated
-- Public Data Networks are applicable. The provisions of the tariff
-- principles are defined in Recommendations D.10, D.11 and D.12.
```

--`,,```,,,,````-`-`,,`,,`,`,,`---

Copyright International Organization for Standardization
Provided by IHS under license with ISO
No reproduction or networking permitted without license from IHS
Not for Resale

```
dSeriesCounts MANAGED OBJECT CLASS
        DERIVED FROM "DMI":top;
        CHARACTERIZED BY dSeriesCounts-P PACKAGE
            BEHAVIOUR dSeriesCounts-P-B BEHAVIOUR
                DEFINED AS !provides the set of packet and segment counts required to collect
                    the charges levied according to the tariff principles contained in
                    Recommendations D.10, D.11 and D.12 for international packet switched
                    public data communications services. The values collected are reported
                    at object deletion.!;;
            ATTRIBUTES
                dSeriesId GET,
                dSeriesResetRequestIndicationPackets GET,
                dSeriesSegmentsSent GET,
                dSeriesSegmentsReceived GET;
            ATTRIBUTE GROUPS
                "GMI":counters
                    dSeriesResetRequestIndicationPackets
                    dSeriesSegmentsSent
                    dSeriesSegmentsReceived;
            NOTIFICATIONS
                "DMI":objectCreation,
                "DMI":objectDeletion;
;;
REGISTERED AS { NLM.moi dSeriesCounts (32) };

-- Packages

dTEVirtualCircuitCounters-P PACKAGE
        BEHAVIOUR
            octetsSentReceivedCounter-B;
        ATTRIBUTES
            "DMI":octetsSentCounter GET,

                -- Note that the DMI definition is in terms of user data octets.

            "DMI":octetsReceivedCounter GET,

                -- Note that the DMI definition is in terms of user data octets.

            dataPacketsReceived GET,
            dataPacketsSent GET,

                -- Note the "DMI":PDUsSentCounter
                -- cannot be used here since it is defined as total number of PDUs sent,
                -- not just data PDUs.

            dataRetransmissionTimerExpiries GET,
            interruptPacketsReceived GET,
            interruptPacketsSent GET,
            interruptTimerExpiries GET,
            providerInitiatedResets GET,
            remotelyInitiatedResets GET,
            resetTimeouts GET;
        ATTRIBUTE GROUPS
            "GMI":counters
                "DMI":octetsReceivedCounter
                "DMI":octetsSentCounter
                dataPacketsReceived
                dataPacketsSent
                dataRetransmissionTimerExpiries
                interruptPacketsReceived
                interruptPacketsSent
                interruptTimerExpiries
                providerInitiatedResets
                remotelyInitiatedResets
                resetTimeouts;
REGISTERED AS { NLM.poi dTEVirtualCircuitCounters-P (19) };
```


Copyright International Organization for Standardization
Provided by IHS under license with ISO
No reproduction or networking permitted without license from IHS
Not for Resale

```
dCEVirtualCallFacilities-P PACKAGE
        BEHAVIOUR dCEVirtualCallFacilities-P-B BEHAVIOUR
            DEFINED AS !provides the set of optional facilities used during the normal operation of a
                DCE, as defined in the appropriate clauses .!;;
        ATTRIBUTES
            bilateralCUGSelection GET,
            callRedirectionDeflectionNotification GET,
            calledLineAddressModifiedNotification GET,
            cUGWithOutgoingAccessSelection GET,
            nUISelection GET,
            reverseCharging GET,
             rOASelection GET;
REGISTERED AS { NLM.poi dCEVirtualCallFacilities-P (24) };


-- Behaviours


logicalChannelIV-B BEHAVIOUR
        DEFINED AS !The initial value of the logical channel attribute
            shall be specified in the CMIP create.!;


optionalCMIPIV-B BEHAVIOUR
        DEFINED AS !The initial value of this attribute may be supplied
            in the CMIP create. When not so supplied, the default
            value shall be used.!;


virtualCircuitNaming-B BEHAVIOUR
        DEFINED AS !A system shall ensure that all instances of MOs derived
            from the virtualCircuit MO which have a common x25PLE or subclass
            as their superior MO, shall have unique values for the
            virtualCircuitId attribute. This applies to both automatically
            generated names and those supplied by means of a CMIP create.!;


-- Name Bindings


permanentVirtualCircuit-DTE-x25PLE-DTE NAME BINDING
        SUBORDINATE OBJECT CLASS permanentVirtualCircuit-DTE AND SUBCLASSES;
        NAMED BY
            SUPERIOR OBJECT CLASS x25PLE-DTE AND SUBCLASSES;
            WITH ATTRIBUTE virtualCircuitId;
        BEHAVIOUR logicalChannelIV-B;
        CREATE WITH-AUTOMATIC-INSTANCE-NAMING;
        DELETE;
REGISTERED AS { NLM.nboi permanentVirtualCircuit-DTE-x25PLE-DTE (26) };


permanentVirtualCircuit-DCE-x25PLE-DCE NAME BINDING
        SUBORDINATE OBJECT CLASS permanentVirtualCircuit-DCE AND SUBCLASSES;
        NAMED BY
            SUPERIOR OBJECT CLASS x25PLE-DCE AND SUBCLASSES;
            WITH ATTRIBUTE virtualCircuitId;
        BEHAVIOUR logicalChannelIV-B;
        CREATE WITH-AUTOMATIC-INSTANCE-NAMING;
        DELETE;
REGISTERED AS { NLM.nboi permanentVirtualCircuit-DCE-x25PLE-DCE (29) };
```


Copyright International Organization for Standardization
Provided by IHS under license with ISO
No reproduction or networking permitted without license from IHS
Not for Resale

```
virtualCall-DTE-x25PLE-DTE NAME BINDING
        SUBORDINATE OBJECT CLASS virtualCall-DTE AND SUBCLASSES;
        NAMED BY
            SUPERIOR OBJECT CLASS x25PLE-DTE AND SUBCLASSES;
            WITH ATTRIBUTE virtualCircuitId;
        BEHAVIOUR virtualCall-DTE-x25PLE-DTE-B BEHAVIOUR
            DEFINED AS !Created only by the operation of the protocol or local
                interface. The instance name is derived automatically
                (as for CREATE WITH-AUTOMATIC-INSTANCE-NAMING).
                The creation of an instance of the virtualCall-DTE MO
                using this name binding may reference an instance of the
                virtualCallIVMO. The means by which such an instance (if any)
                of the virtualCallIVMO is identified is a local matter.
                When this occurs,
                some of the initial values of the attributes of the instance
                of the virtualCall-DTE MO may be supplied by the values of the
                attributes in the specified instance of the virtualCallIVMO. However, any
                such value may be overridden by a value supplied by local means (for
                example, across an internal interface). Where values are supplied by the
                IVMO, the initial value of an attribute of the virtualCall-DTE MO
                shall be the value of the corresponding attribute in the virtualCallIVMO
                (that is, which has the same attribute template label). The naming
                attribute of the virtualCall-DTE is assigned a value
                according to local mechanisms.!;;
REGISTERED AS { NLM.nboi virtualCall-DTE-x25PLE-DTE (24) };


virtualCall-DCE-x25PLE-DCE-Automatic NAME BINDING
        SUBORDINATE OBJECT CLASS virtualCall-DCE AND SUBCLASSES;
        NAMED BY
            SUPERIOR OBJECT CLASS x25PLE-DCE AND SUBCLASSES;
            WITH ATTRIBUTE virtualCircuitId;
        BEHAVIOUR virtualCall-DCE-x25PLE-DCE-Automatic-B BEHAVIOUR
            DEFINED AS !The name binding that applies when the virtualCall-DCE
                Managed Object is created automatically by the operation of the
                system. The instance name is derived automatically
                (as for CREATE WITH-AUTOMATIC-INSTANCE-NAMING).
                The creation of an instance of the virtualCall-DCE MO
                using this name binding may reference an instance of the
                virtualCallIVMO. The means by which such an instance (if any)
                of the virtualCallIVMO is identified is a local matter.
                When this occurs,
                some of the initial values of the attributes of the instance
                of the virtualCall-DCE MO may be supplied by the values of the
                attributes in the specified instance of the virtualCallIVMO. However, any
                such value may be overridden by a value supplied by local means (for
                example, across an internal interface). Where values are supplied by the
                IVMO, the initial value of an attribute of the virtualCall-DCE MO
                shall be the value of the corresponding attribute in the virtualCallIVMO
                (that is, which has the same attribute template label). The naming
                attribute of the virtualCall-DCE is assigned a value
                according to local mechanisms.!;;
        DELETE;
REGISTERED AS { NLM.nboi virtualCall-DCE-x25PLE-DCE-Automatic (30) };


virtualCall-DCE-x25PLE-DCE-Management NAME BINDING
        SUBORDINATE OBJECT CLASS virtualCall-DCE AND SUBCLASSES;
        NAMED BY
            SUPERIOR OBJECT CLASS x25PLE-DCE AND SUBCLASSES;
            WITH ATTRIBUTE virtualCircuitId;
        BEHAVIOUR virtualCall-DCE-x25PLE-DCE-Management-B BEHAVIOUR
            DEFINED AS !The name binding that applies when the virtualCall-DCE Managed Object
                is created by management operation.!;;
        CREATE WITH-AUTOMATIC-INSTANCE-NAMING;
        DELETE;
REGISTERED AS { NLM.nboi virtualCall-DCE-x25PLE-DCE-Management (31) };
```

Copyright International Organization for Standardization
Provided by IHS under license with ISO
No reproduction or networking permitted without license from IHS
Not for Resale

```
virtualCallIVMO-x25PLE NAME BINDING
        SUBORDINATE OBJECT CLASS virtualCallIVMO AND SUBCLASSES;
        NAMED BY
            SUPERIOR OBJECT CLASS x25PLE AND SUBCLASSES;
            WITH ATTRIBUTE virtualCallIVMOId;
        CREATE;
        DELETE;
REGISTERED AS { NLM.nboi virtualCallIVMO-x25PLE (25) };

dSeriesCounts-virtualCall-DCE-Automatic NAME BINDING
        SUBORDINATE OBJECT CLASS dSeriesCounts AND SUBCLASSES;
        NAMED BY
            SUPERIOR OBJECT CLASS virtualCall-DCE AND SUBCLASSES;
            WITH ATTRIBUTE dSeriesId;
        BEHAVIOUR dSeriesCounts-virtualCall-DCE-Automatic-B BEHAVIOUR
            DEFINED AS !Created only by the operation of the protocol or local interface. The instance
                name is derived automatically (as for CREATE WITH-AUTOMATIC-INSTANCE-NAMING).!;;
            CREATE;
            DELETE;
REGISTERED AS { NLM.nboi dSeriesCounts-virtualCall-DCE-Automatic (32) };

dSeriesCounts-virtualCall-DCE-Management NAME BINDING
        SUBORDINATE OBJECT CLASS dSeriesCounts AND SUBCLASSES;
        NAMED BY
            SUPERIOR OBJECT CLASS virtualCall-DCE AND SUBCLASSES;
            WITH ATTRIBUTE dSeriesId;
        BEHAVIOUR dSeriesCounts-virtualCall-DCE-Management-B BEHAVIOUR
            DEFINED AS !The name binding that applies when the dSeriesCounts Managed Object
                is created by management operation.!;;
        CREATE;
        DELETE;
REGISTERED AS { NLM.nboi dSeriesCounts-virtualCall-DCE-Management (33) };

-- Attributes

bilateralCUGSelection ATTRIBUTE
        WITH ATTRIBUTE SYNTAX NLM.Boolean;
        MATCHES FOR EQUALITY;
        BEHAVIOUR bilateralCUGSelection-B BEHAVIOUR
            DEFINED AS !Indicates the use of the bilateral closed user group selection facility
                for that call.!;;
REGISTERED AS { NLM.aoi bilateralCUGSelection (126) };

calledAddressExtension ATTRIBUTE
        WITH ATTRIBUTE SYNTAX NLM.NAddress;
            -- In the OSI context this will always be an NSAP address but in other uses
            -- it may not. In any case it may be null, for example, when used by ITU-T Rec. X.233 | ISO/IEC 8473-1.
        MATCHES FOR EQUALITY, SUBSTRINGS;
        BEHAVIOUR calledAddressExtension-B BEHAVIOUR
            DEFINED AS !The contents of the called address extension field.!;;
REGISTERED AS { NLM.aoi calledAddressExtension (100) };

calledLineAddressModifiedNotification ATTRIBUTE
        WITH ATTRIBUTE SYNTAX NLM.Boolean;
        MATCHES FOR EQUALITY;
        BEHAVIOUR calledLineAddressModifiedNotification-B BEHAVIOUR
            DEFINED AS !Indicates the use of the called line address modified notification facility
                for that call.!;;
REGISTERED AS { NLM.aoi calledLineAddressModifiedNotification (128) };

callingAddressExtension ATTRIBUTE
        WITH ATTRIBUTE SYNTAX NLM.NAddress;
            -- In the OSI context this will always be an NSAP address but in other uses
            -- it may not. In any case it may be null, for example, when used by ITU-T Rec. X.233 | ISO/IEC 8473-1.
        MATCHES FOR EQUALITY, SUBSTRINGS;
        BEHAVIOUR callingAddressExtension-B BEHAVIOUR
            DEFINED AS !The contents of the calling address extension field.!;;
REGISTERED AS { NLM.aoi callingAddressExtension (99) };
```


Copyright International Organization for Standardization
Provided by IHS under license with ISO
No reproduction or networking permitted without license from IHS
Not for Resale

```
callRedirectionDeflectionNotification ATTRIBUTE
        WITH ATTRIBUTE SYNTAX NLM.Boolean;
        MATCHES FOR EQUALITY;
        BEHAVIOUR callRedirectionDeflectionNotification-B BEHAVIOUR
            DEFINED AS !Indicates the use of the call redirection deflection notification facility
                for that call.!;;
REGISTERED AS { NLM.aoi callRedirectionDeflectionNotification (130) };

chargingDirection ATTRIBUTE
        WITH ATTRIBUTE SYNTAX NLM.Boolean;
        MATCHES FOR EQUALITY;
        BEHAVIOUR chargingDirection-B BEHAVIOUR
            DEFINED AS !Indicates the use of the charging direction facility
                for that call.!;;
REGISTERED AS { NLM.aoi chargingDirection (131) };

cUGSelection ATTRIBUTE
        WITH ATTRIBUTE SYNTAX NLM.Boolean;
        MATCHES FOR EQUALITY;
        BEHAVIOUR cUGSelection-B BEHAVIOUR
            DEFINED AS !Indicates the use of the closed user group selection facility
                for that call.!;;
REGISTERED AS { NLM.aoi cUGSelection (135) };

cUGWithOutgoingAccessSelection ATTRIBUTE
        WITH ATTRIBUTE SYNTAX NLM.Boolean;
        MATCHES FOR EQUALITY;
        BEHAVIOUR cUGWithOutgoingAccessSelection-B BEHAVIOUR
            DEFINED AS !Indicates the use of the Closed User Group With Outgoing Access Selection facility
                for that call. It may only take the value 'True' if the DTE
                does not have a preferential closed user group, as described
                in ITU-T Recommendation X.25 and ISO/IEC 8208.!;;
REGISTERED AS { NLM.aoi cUGWithOutgoingAccessSelection (138) };

dSeriesId ATTRIBUTE
        WITH ATTRIBUTE SYNTAX NLM.GraphicStringBase;
        MATCHES FOR EQUALITY, SUBSTRINGS;
        BEHAVIOUR dSeriesId-B BEHAVIOUR
            DEFINED AS !The name of this instance of the dSeriesCounts MO.!;;
REGISTERED AS { NLM.aoi dSeriesId (140) };

dSeriesResetRequestIndicationPackets ATTRIBUTE
        DERIVED FROM "GMI":nonWrapping64BitCounter;
        MATCHES FOR EQUALITY, ORDERING;
        BEHAVIOUR dSeriesResetRequestIndicationPackets-B BEHAVIOUR
            DEFINED AS !Value for count of Reset Request or Indication Packets
                with restrictions defined in Recommendation D.11 .!;;
REGISTERED AS { NLM.aoi dSeriesResetRequestIndicationPackets (141) };

dSeriesSegmentsReceived ATTRIBUTE
        DERIVED FROM "GMI":nonWrapping64BitCounter;
        MATCHES FOR EQUALITY, ORDERING;
        BEHAVIOUR dSeriesSegmentsReceived-B BEHAVIOUR
            DEFINED AS !Value for count of Segments Received, in 64 octets,
                as per Recommendation D.12.!;;
REGISTERED AS { NLM.aoi dSeriesSegmentsReceived (143) };

dSeriesSegmentsSent ATTRIBUTE
        DERIVED FROM "GMI":nonWrapping64BitCounter;
        MATCHES FOR EQUALITY, ORDERING;
        BEHAVIOUR dSeriesSegmentsSent-B BEHAVIOUR
            DEFINED AS !Value for count of Segments Sent, in 64 octets,
                as per Recommendation D.12.!;;
REGISTERED AS { NLM.aoi dSeriesSegmentsSent (142) };
```

Copyright International Organization for Standardization
Provided by IHS under license with ISO
No reproduction or networking permitted without license from IHS
Not for Resale

```
direction ATTRIBUTE
        WITH ATTRIBUTE SYNTAX NLM.Direction;
            -- Enumerated( Incoming, Outgoing)
        MATCHES FOR EQUALITY;
            BEHAVIOUR direction-B BEHAVIOUR
                DEFINED AS !The direction (incoming or outgoing) of the call.!;;
REGISTERED AS { NLM.aoi direction (92) };


fastSelect ATTRIBUTE
        WITH ATTRIBUTE SYNTAX NLM.FastSelect;
            -- Enumerated( Not Specified, Fast Select, Fast Select With Restricted Response, No Fast Select)
        MATCHES FOR EQUALITY;
        BEHAVIOUR fastSelect-B BEHAVIOUR
            DEFINED AS !Type of fast select used or to be used for call.
                In the case of an IVMO, this specifies that one of 'fast select',
                'fast select with restricted response', or no fast select
                facility is to be used for the call. It includes a value
                'not specified' which indicates that no preference is expressed
                in the IVMO. In the case of a non-IVMO MO, this specifies that one
                of 'fast select' or 'no fast select' was used for the call.!;;
REGISTERED AS { NLM.aoi fastSelect (76) };


logicalChannel ATTRIBUTE
        WITH ATTRIBUTE SYNTAX NLM.LogicalChannelId;
        MATCHES FOR EQUALITY, ORDERING;
        BEHAVIOUR logicalChannel-B BEHAVIOUR
            DEFINED AS !The actual Logical Channel ID used for the call.!;;
REGISTERED AS { NLM.aoi logicalChannel (89) };


nUISelection ATTRIBUTE
        WITH ATTRIBUTE SYNTAX NLM.Boolean;
        MATCHES FOR EQUALITY;
        BEHAVIOUR nUISelection-B BEHAVIOUR
            DEFINED AS !Indicates the use of the network user identification selection facility
                for that call.!;;
REGISTERED AS { NLM.aoi nUISelection (155) };


originallyCalledAddress ATTRIBUTE
        WITH ATTRIBUTE SYNTAX NLM.DTEAddress;
        MATCHES FOR EQUALITY, SUBSTRINGS;
        BEHAVIOUR originallyCalledAddress-B BEHAVIOUR
            DEFINED AS !The originally called address.!;;
REGISTERED AS { NLM.aoi originallyCalledAddress (98) };


packetSizes ATTRIBUTE
        WITH ATTRIBUTE SYNTAX NLM.BidirectionalValues;
        MATCHES FOR EQUALITY;
        BEHAVIOUR packetSizes-B BEHAVIOUR
            DEFINED AS !The packet sizes for this VC.
                In the case of an IVMO MO it is the proposed value of the
                packet sizes (incoming and outgoing) to be used when establishing
                the virtual call, expressed in octets. The value of NULL
                indicates that the default packet size for that direction
                (as indicated by the defaultPacketSizes attribute of the
                containing X.25 PLE MO), is to be used.
                In the case of a non-IVMO MO it is the actual packet sizes
                in use for this VC.!;;
REGISTERED AS { NLM.aoi packetSizes (121) };
```


Copyright International Organization for Standardization
Provided by IHS under license with ISO
No reproduction or networking permitted without license from IHS
Not for Resale

```
redirectReason ATTRIBUTE
        WITH ATTRIBUTE SYNTAX NLM.RedirectReason;
        MATCHES FOR EQUALITY;
        BEHAVIOUR redirectReason-B BEHAVIOUR
            DEFINED AS !The reason why the call has been redirected.
                This is the reason why the call has been offered or has been
                connected to an address different from the originally
                called address.
                That is, the value of the first octet of the Facility
                Parameter Field of the CRCDN or CLAMN facility, indicating
                the reason for call redirection or call deflection.
                The zero value indicates that the call was not redirected.!;;
REGISTERED AS { NLM.aoi redirectReason (97) };

remoteDTEAddress ATTRIBUTE
        WITH ATTRIBUTE SYNTAX NLM.DTEAddress;
        MATCHES FOR EQUALITY, SUBSTRINGS;
        BEHAVIOUR remoteDTEAddress-B BEHAVIOUR
            DEFINED AS !The DTE Address of the remote DTE.
                In the case of an outgoing call, this is the remote DTE address
                from the called address of the transmitted call request packet.
                In the case of an incoming call, it is the calling address from
                the received call request packet.!;;
REGISTERED AS { NLM.aoi remoteDTEAddress (93) };

remoteLogicalChannel ATTRIBUTE
        WITH ATTRIBUTE SYNTAX NLM.LogicalChannelId;
            -- 12 bit Channel ID
        MATCHES FOR EQUALITY, ORDERING;
        BEHAVIOUR remoteLogicalChannel-B BEHAVIOUR
            DEFINED AS !The Remote Logical Channel ID for the Permanent Virtual Circuit.!;;
REGISTERED AS { NLM.aoi remoteLogicalChannel (162) };

reverseCharging ATTRIBUTE
        WITH ATTRIBUTE SYNTAX NLM.Boolean;
        MATCHES FOR EQUALITY;
        BEHAVIOUR reverseCharging-B BEHAVIOUR
            DEFINED AS !Use of reverse charging.
                When 'True' for an outgoing call, it shall be (for an IVMO), or was
                (for a non-IVMO), initiated requesting reverse charging. When
                'True' for an incoming call associated with a virtualCall MO,
                it indicates that reverse charging was accepted.!;;
REGISTERED AS { NLM.aoi reverseCharging (75) };

rOASelection ATTRIBUTE
        WITH ATTRIBUTE SYNTAX NLM.Boolean;
        MATCHES FOR EQUALITY;
        BEHAVIOUR rOASelection-B BEHAVIOUR
            DEFINED AS !Indicates the use of the registered operating agency selection
                facility for that call.!;;
REGISTERED AS { NLM.aoi rOASelection (166) };

throughputClasses ATTRIBUTE
        WITH ATTRIBUTE SYNTAX NLM.BidirectionalValues;
        MATCHES FOR EQUALITY, ORDERING;
        BEHAVIOUR throughputClasses-B BEHAVIOUR
            DEFINED AS !The throughput classes in use or to be used.
                For an IVMO, this is the throughput classes to be proposed.
                For a non-IVMO it is the actual throughput classes in use.
                For Virtual Calls this is the result of negotiation.!;;
REGISTERED AS { NLM.aoi throughputClasses (96) };

transitDelaySelectionAndIndication ATTRIBUTE
        WITH ATTRIBUTE SYNTAX NLM.Boolean;
        MATCHES FOR EQUALITY;
        BEHAVIOUR transitDelaySelectionAndIndication-B BEHAVIOUR
            DEFINED AS !Indicates the use of the transit delay selection and
                indication facility for that call.!;;
REGISTERED AS { NLM.aoi transitDelaySelectionAndIndication (169) };
```

Copyright International Organization for Standardization
Provided by IHS under license with ISO
No reproduction or networking permitted without license from IHS
Not for Resale

```
virtualCallIVMOId ATTRIBUTE
        WITH ATTRIBUTE SYNTAX NLM.GraphicStringBase;
        MATCHES FOR EQUALITY, SUBSTRINGS;
        BEHAVIOUR virtualCallIVMOId-B BEHAVIOUR
            DEFINED AS !The name of this instance of virtualCallIVMO.!;;
REGISTERED AS { NLM.aoi virtualCallIVMOId (117) };

virtualCircuitId ATTRIBUTE
        WITH ATTRIBUTE SYNTAX NLM.GraphicStringBase;
        MATCHES FOR EQUALITY, SUBSTRINGS;
        BEHAVIOUR virtualCircuitId-B BEHAVIOUR
            DEFINED AS !The name of this instance of virtualCircuit MO or subclass.!;;
REGISTERED AS { NLM.aoi virtualCircuitId (116) };

windowSizes ATTRIBUTE
        WITH ATTRIBUTE SYNTAX NLM.BidirectionalValues;
        MATCHES FOR EQUALITY;
        BEHAVIOUR windowSizes-B BEHAVIOUR
            DEFINED AS !The actual window sizes in use for this VC.!;;
REGISTERED AS { NLM.aoi windowSizes (124) };
```

6 ASN.1 modules

```
NLM { joint-iso-ccitt network-layer (13) management (0) nLM(2) asn1Module (2) 0 }
DEFINITIONS IMPLICIT TAGS::= BEGIN
-- EXPORTS everything --
IMPORTS communicationsProtocolError
FROM Attribute-ASN1Module  { joint-iso-ccitt ms(9) smi(3) part2(2) asn1Module(2) 1 }

ObjectInstance
FROM CMIP-1 {joint-iso-ccitt ms(9) cmip(1) modules(0) protocol(3)}

Timer
FROM GMI-AttributeModule {joint-iso-ccitt ms(9) smi(3) part5(5) asn1Module(2) gmiAttributeModule(0)};
```

6.1 Object identifier definitions

6.1.1 Abbreviations

```
network-layer OBJECT IDENTIFIER ::=  { joint-iso-ccitt network-layer (13) }
nl OBJECT IDENTIFIER ::=  { network-layer management (0) }
nloi OBJECT IDENTIFIER ::= { nl nLM(2) }
sseoi OBJECT IDENTIFIER ::= { nloi standardSpecificExtensions (0) }
moi OBJECT IDENTIFIER ::= { nloi managedObjectClass (3) }
poi OBJECT IDENTIFIER ::= { nloi package (4) }
proi OBJECT IDENTIFIER ::= { nloi parameter (5) }
nboi OBJECT IDENTIFIER ::= { nloi nameBinding (6) }
aoi OBJECT IDENTIFIER ::= { nloi attribute (7) }
agoi OBJECT IDENTIFIER ::= { nloi attributeGroup (8) }
acoi OBJECT IDENTIFIER ::= { nloi action (9) }
noi OBJECT IDENTIFIER ::= { nloi notification (10) }
```

6.1.2 Other Object Identifier definitions

```
-- value assignments for specificProblems

pDUDiscard OBJECT IDENTIFIER ::= { sseoi specificProblems(3) pDUDiscard(1) }
pDUDiscardReasonNotSpecified OBJECT IDENTIFIER ::= { pDUDiscard
        reasonNotSpecified(0) }
pDUDiscardProtocolProcedureError OBJECT IDENTIFIER ::= { pDUDiscard
        protocolProcedureError(1) }
pDUDiscardIncorrectChecksum OBJECT IDENTIFIER ::= { pDUDiscard
        incorrectChecksum(2) }
pDUDiscardHeaderSyntaxError OBJECT IDENTIFIER ::= { pDUDiscard
        headerSyntaxError(4) }
pDUDiscardSegmentationNeededButNotPermitted OBJECT IDENTIFIER ::= { pDUDiscard
        segmentationNeededButNotPermitted(5) }
pDUDiscardIncompletePDUReceived OBJECT IDENTIFIER ::= { pDUDiscard
        incompletePDUReceived(6) }
```


Copyright International Organization for Standardization
Provided by IHS under license with ISO
No reproduction or networking permitted without license from IHS
Not for Resale

```
pDUDiscardDuplicateOption OBJECT IDENTIFIER ::= { pDUDiscard
        duplicateOption(7) }
pDUDiscardDestinationAddressUnreachable OBJECT IDENTIFIER ::= { pDUDiscard
        destinationAddressUnreachable(128) }
pDUDiscardDestinationAddressUnknown OBJECT IDENTIFIER ::= { pDUDiscard
        destinationAddressUnknown(129) }
pDUDiscardUnspecifiedSourceRouteingError OBJECT IDENTIFIER ::= { pDUDiscard
        unspecifiedSourceRouteingError(144) }
pDUDiscardSyntaxErrorInSourceRouteingField OBJECT IDENTIFIER ::= { pDUDiscard
        syntaxErrorInSourceRouteingField(145) }
pDUDiscardUnknownAddressInSourceRouteingField OBJECT IDENTIFIER ::= { pDUDiscard
        unknownAddressInSourceRouteingField(146) }
pDUDiscardPathNotAcceptable OBJECT IDENTIFIER ::= { pDUDiscard
        pathNotAcceptable(147) }
pDUDiscardLifetimeExpiredWhileDataUnitInTransit OBJECT IDENTIFIER ::= { pDUDiscard
        lifetimeExpiredWhileDataUnitInTransit(160) }
pDUDiscardLifetimeExpiredDuringReassembly OBJECT IDENTIFIER ::= { pDUDiscard
        lifetimeExpiredDuringReassembly(161) }
pDUDiscardUnsupportedOptionNotSpecified OBJECT IDENTIFIER ::= { pDUDiscard
        unsupportedOptionNotSpecified(176) }
pDUDiscardUnsupportedProtocolVersion OBJECT IDENTIFIER ::= { pDUDiscard
        unsupportedProtocolVersion(177) }
pDUDiscardUnsupportedSecurityOption OBJECT IDENTIFIER ::= { pDUDiscard
        unsupportedSecurityOption(178) }
pDUDiscardUnsupportedSourceRouteingOption OBJECT IDENTIFIER ::= { pDUDiscard
        unsupportedSourceRouteingOption(179) }
pDUDiscardUnsupportedRecordingOfRouteOption OBJECT IDENTIFIER ::= { pDUDiscard
        unsupportedRecordingOfRouteOption(180) }
pDUDiscardReassemblyInterference OBJECT IDENTIFIER ::= { pDUDiscard
        reassemblyInterference(181) }
iSO9542PDUDiscard OBJECT IDENTIFIER ::= { sseoi specificProblems(3) iSO9542PDUDiscard(2) }

-- for communication information notification

iSReachabilityChange OBJECT IDENTIFIER ::= {
        sseoi informationtype(4) iSReachabilityChange(1) }
eSReachabilityChange OBJECT IDENTIFIER ::= {
        sseoi informationtype(4) eSReachabilityChange(2) }
successfulConnectionEstablishment OBJECT IDENTIFIER ::= {
        sseoi informationtype(4) successfulConnectionEstablishment (3) }

-- for SNPAAddress type

sNPADTEAddress OBJECT IDENTIFIER ::= {
        sseoi sNPAAddressType(5) dTEAddress(1) }
sNPAMACAddress OBJECT IDENTIFIER ::= {
        sseoi sNPAAddressType(5) mACAddress(2) }
```

6.2 Other definitions

```
BidirectionalValues ::= SEQUENCE {
        incoming    [0] ChoiceInteger,
        outgoing    [1] ChoiceInteger }
Boolean ::= BOOLEAN
callRequestResponseTimerDefault INTEGER ::= 200
ChoiceInteger ::= CHOICE {
        dontCare[0] IMPLICIT NULL,  -- The 'I don't care' value --
        integer     [1] IMPLICIT INTEGER }
clearRequestRetransmissionCountDefault INTEGER ::= 1
clearRequestResponseTimerDefault INTEGER ::= 180
cLNSId-Value GraphicString ::= "CLNS"
cONSId-Value GraphicString ::= "CONS"

DefaultTCA ::= SEQUENCE {
        subscription                [0] BOOLEAN,
        supportedThroughClasses     [1] SET OF INTEGER OPTIONAL,
        selectedThroughputClasses   [2] BidirectionalValues OPTIONAL }
```

Copyright International Organization for Standardization
Provided by IHS under license with ISO
No reproduction or networking permitted without license from IHS
Not for Resale

```
dataPacketRetransmissionCountDefault INTEGER ::= 0
windowRotationTimerDefault INTEGER ::= 200
DTEAddress ::= SEQUENCE {
        numberingPlanId         [0] ENUMERATED { unknown (0), x121(1), e164(2) },
        addressDigits           [1] OCTET STRING }

Direction ::= ENUMERATED {
            incoming(0),
            outgoing(1) }
DiscardReason ::= INTEGER(0..255)
EndToEndDelay ::= INTEGER(0..65535)
        -- Note that according to ISO/IEC 8208 or ITU-T Rec. X.25 a value of 65535 indicates that the delay is
        -- unknown or exceeds 65534 milliseconds.
false BOOLEAN ::= FALSE
False ::= BOOLEAN (FALSE)
FastSelect ::= ENUMERATED {
            notSpecified(0),
            fastSelect(1),
            fastSelectWithRestrictedResponse(2),
            noFastSelect(3) }
GraphicStringBase ::= GraphicString
holdingTimerMultiplierDefault INTEGER ::= 3
HoldingTimerMultiplierPermitted ::= INTEGER(2..63)
HoldingTimerMultiplierRequired ::= INTEGER(3)
Integer ::= INTEGER
interruptResponseTimerDefault INTEGER ::= 180
iSConfigurationTimerDefault  Timer ::= {exponent 0, mantissa 10}
ISO9542Subsets ::= BIT STRING { configuration(0), redirection(1) }
Lifetime ::= INTEGER(1..255)
LocalDistinguishedName ::= localDistinguishedName < ObjectInstance
LocalDistinguishedNames ::= SET OF LocalDistinguishedName
LogicalChannelAssignments ::= SEQUENCE {
        pVC                     [0] SET OF LogicalChannelId,
        incoming                [1] LogicalChannelRange OPTIONAL,
        twoWay                  [2] LogicalChannelRange OPTIONAL,
        outgoing                [3] LogicalChannelRange OPTIONAL }
LogicalChannelId ::= INTEGER (1..4095)
LogicalChannelRange ::= SEQUENCE {
        low                     [1] LogicalChannelId,
        high                    [2] LogicalChannelId }
ManualISSNPAAddress ::= SET OF SNPAAddress
MaxActiveCircuits ::= ChoiceInteger
NotificationDataSyntax ::= SEQUENCE {
        channel                 [1] LogicalChannelId OPTIONAL,
        packetHeader        [2] OCTET STRING,
        diagnosticCode      [3] OCTET STRING,
        causeCode               [4] OCTET STRING}
NAddress ::= OCTET STRING(SIZE(0..20))
        -- up to 20 octets
NAddresses ::= SET OF NAddress
networkSubsystemId-Value GraphicString ::= "NetworkSubsystem"
NonStandardDPS ::= SEQUENCE {
        subscription                [0] BOOLEAN,
        supportedPacketSizes        [1] SET OF INTEGER OPTIONAL,
        selectedPacketSizes         [2] BidirectionalValues OPTIONAL }
NonStandardDWS ::= SEQUENCE {
        subscription                [0] BOOLEAN,
        supportedWindowSizes        [1] SET OF INTEGER OPTIONAL,
        selectedWindowSizes         [2] BidirectionalValues OPTIONAL }
NUI ::= OctetString(SIZE(0..255))
nullBidirectionalValues BidirectionalValues ::= {
      incoming      dontCare: NULL,
      outgoing      dontCare: NULL }
nullChoiceInteger ChoiceInteger ::= dontCare: NULL
OctetString ::= OCTET STRING
PacketSequencing ::= INTEGER
PDUFormatErrorSyntax ::= PDUHeader
PDUHeader ::= OCTET STRING (SIZE(1..255))
```


Copyright International Organization for Standardization
Provided by IHS under license with ISO
No reproduction or networking permitted without license from IHS
Not for Resale

```
PDUOtherErrorSyntax ::= SEQUENCE {
        errorCode                   [1] INTEGER(0..255),
        header                      [2] PDUHeader }
ProtocolVersion ::= ENUMERATED {
        iSO8208V1 (0),
        iSO8208V2 (1),
        x2584 (2),
        x2588 (3) }
ReachabilityChangeSyntax ::= SEQUENCE {
        newState                    [1] ENUMERATED { down(0), up(1) },
        nAddresses                  [2] SET OF NAddress,
        sNPAAddress                 [3] SNPAAddress OPTIONAL,
        reason                      [4] ENUMERATED
                                        { holdingTimerExpired(0),
                                        circuitDisabled(1) } OPTIONAL } -- Down only
RedirectHoldingTime ::= INTEGER(1..65535)
redirectHoldingTime-Default INTEGER ::= 600
RedirectHoldingTime-Permitted ::= INTEGER(1..65535)
RedirectReason ::= INTEGER(0..127)
registrationRequestRetransmissionCountDefault INTEGER ::= 1
registrationRequestResponseTimerDefault INTEGER ::= 300
registrationPermittedDefault BOOLEAN ::= FALSE
rejectRetransmissionCountDefault INTEGER ::= 0
rejectResponseTimerDefault INTEGER ::= 60
resetRequestRetransmissionCountDefault INTEGER ::= 1
resetRequestResponseTimerDefault INTEGER ::= 180
restartRequestRetransmissionCountDefault INTEGER ::= 1
restartRequestResponseTimerDefault INTEGER ::= 180
ROASequence ::= SEQUENCE OF NumericString (SIZE(0..4))
        -- each numeric string limited to 4 decimal digits
        -- an empty sequence is permitted
SDUSize ::= INTEGER (0..65535)
SNPAAddress ::= SEQUENCE {
        type                        [1] OBJECT IDENTIFIER,
        address                     [2] OCTET STRING }
suggestedESConfigurationTimerDefault Timer ::= {exponent 0,  mantissa 600}
SupportedProtocol ::= SEQUENCE {
        protocol            [1] OBJECT IDENTIFIER,
        versions            [2] SET OF ProtocolVersion,
        defectsRepaired     [3] SET OF OBJECT IDENTIFIER OPTIONAL }
SupportedProtocols ::= SET OF SupportedProtocol
SystemType ::= ENUMERATED { eS(1), iS(2) }
SystemTypes ::= SET OF SystemType
windowStatusTransmissionTimerDefault INTEGER ::= 60
X25PLEMode ::= ENUMERATED {
                dTE(0),
                dCE(1),
                dTEasDCE(2) }
END
```

7 Conformance

Implementations claiming to conform to this Recommendation | International Standard shall comply with the conformance requirements as defined in the following subclauses.

7.1 Conformance requirements to this Recommendation | International Standard

7.1.1 Static conformance

The implementation shall conform to the requirements of this Recommendation | International Standard in the manager role, the agent role, or both roles. A claim of conformance to at least one role shall be made in Table D.1.

If a claim of conformance is made for support in the manager role, the implementation shall support at least one management operation or notification or action of the managed objects specified by this Recommendation | International Standard. The conformance requirements in the manager role for those management operations, notifications and actions are identified in Table D.3 and further tables referenced by Annex D.

Copyright International Organization for Standardization
Provided by IHS under license with ISO
No reproduction or networking permitted without license from IHS
Not for Resale

If a claim of conformance is made for support in the agent role, the implementation shall support one or more instances of the network subsystem managed object class identified in Table D.4 and further tables referenced by Annex D.

If a claim of conformance is made for support in the agent role, the implementation shall support at least one name binding identified in Table D.7 for each supported managed object.

The implementation shall support the transfer syntax derived from the encoding rules specified in CCITT Rec. X.209 | ISO/IEC 8825 named {joint-iso-ccitt asn1(1) basicEncoding(1)} for the abstract data types referenced by the definitions for which support is claimed.

7.1.2 Dynamic conformance

Implementations claiming to conform to this Recommendation | International Standard shall support the elements of procedure and definitions of semantics corresponding to the definitions for which support is claimed.

7.1.3 Management implementation conformance statement requirements

Any MCS proforma, MICS proforma, MOCS proforma, and MRCS proforma which conform to this Recommendation | International Standard shall be technically identical to the proformas specified in Annexes D, E, F, and G preserving table numbering and the index numbers of items, and differing only in pagination and page headers.

The supplier of an implementation which is claimed to conform to this Recommendation | International Standard shall complete a copy of the Management Conformance Summary (MCS) provided in Annex D as part of the conformance requirements together with any other ICS proformas referenced as applicable from that MCS. Any MCS, MICS, MOCS, and MRCS which conform to this Recommendation | International Standard shall:

- describe an implementation which conforms to this Recommendation | International Standard;
- have been completed in accordance with the instructions for completion given in ITU-T Rec. X.724 | ISO/IEC 10165-6;
- include the information necessary to uniquely identify both the supplier and the implementation.

7.2 Protocol specific conformance requirements

The supplier of an implementation which is claimed to conform to this Recommendation | International Standard shall support at least one protocol identified in Table D.2.

7.2.1 Conformance to the CLNS

An implementation claiming conformance to the CLNS in the agent role as a managed implementation shall:

a) conform to ITU-T Rec. X.283 | ISO/IEC 10733 as defined in 7.1;

b) support the network entity MO, the CLNS MO, the NSAP MO and the linkage MO.

7.2.2 Conformance to the CONS

An implementation claiming conformance to the CONS in the agent role as a managed implementation shall:

a) conform to ITU-T Rec. X.283 | ISO/IEC 10733 as defined in 7.1;

b) support the network entity MO, the CONS MO, the NSAP MO, the network connection MO and the linkage MO.

7.2.3 Conformance to the X.25 DTE

An implementation claiming conformance to the X.25 DTE in the agent role as a managed implementation shall:

a) conform to ITU-T Rec. X.283 | ISO/IEC 10733 as defined in 7.1;

b) support the X.25 PLE DTE MO and at least one class derived from the virtual circuit DTE.

7.2.4 Conformance to the X.25 DCE

An implementation claiming conformance to the X.25 DCE in the agent role as a managed implementation shall:

a) conform to ITU-T Rec. X.283 | ISO/IEC 10733 as defined in 7.1;

b) support the X.25 PLE DCE MO and at least one class derived from the virtual circuit DCE.

Copyright International Organization for Standardization
Provided by IHS under license with ISO
No reproduction or networking permitted without license from IHS
Not for Resale

Annex A

Allocation of Object Identifiers

(This annex forms an integral part of this Recommendation | International Standard)

The following Object Identifiers have been allocated by this Recommendation | International Standard. Object Identifiers which had been allocated when the equivalent of this Recommendation | International Standard was at the draft stage have not been re-allocated. If any modification, other than a change to the behaviour clause, has been made to any template which had been allocated an Object Identifier, the new template has been allocated a new Object Identifier and the old Object Identifier [identified thus: *obsolete (1)*] should not be re-used.

joint-iso-ccitt (2)
ms (9)
smi (3)
part2 (2)
asn1Module (2)
(1)
network-layer (13)
management (0)
nLM (2)
standardSpecificExtensions (0)
specificProblems (3)
pDUDiscard (1)
reasonNotSpecified (0)
protocolProcedureError (1)
incorrectChecksum (2)
headerSyntaxError (4)
segmentationNeededButNotPermitted (5)
incompletePDUReceived (6)
duplicateOption (7)
destinationAddressUnreachable (128)
destinationAddressUnknown (129)
unspecifiedSourceRouteingError (144)
syntaxErrorInSourceRouteingField (145)
unknownAddressInSourceRouteingField (146)
pathNotAcceptable (147)
lifetimeExpiredWhileDataUnitInTransit (160)
lifetimeExpiredDuringReassembly (161)
unsupportedOptionNotSpecified (176)
unsupportedProtocolVersion (177)
unsupportedSecurityOption (178)
unsupportedSourceRouteingOption (179)
unsupportedRecordingOfRouteOption (180)
reassemblyInterference (181)
iSO9542PDUDiscard (2)
informationtype (4)
iSReachabilityChange (1)
eSReachabilityChange (2)
successfulConnectionEstablishment (3)
sNPAAddressType (5)
dTEAddress (1)
mACAddress (2)
asn1Module (2)
(0)

--`,,```,,,,````-`-`,,`,,`,`,,`---

Copyright International Organization for Standardization
Provided by IHS under license with ISO
No reproduction or networking permitted without license from IHS
Not for Resale

- **managedObjectClass (3)**
  - **networkSubsystem (1)**
  - ***obsolete (2)***
  - ***obsolete (3)***
  - **nSAP (4)**
  - ***obsolete (5)***
  - ***obsolete (6)***
  - ***obsolete (7)***
  - ***obsolete (8)***
  - ***obsolete (9)***
  - ***obsolete (10)***
  - ***obsolete (11)***
  - ***obsolete (12)***
  - **networkConnection (13)**
  - **virtualCircuit (14)**
  - **virtualCallIVMO (15)**
  - **virtualCall-DTE (16)**
  - **x25PLE-DTE (17)**
  - **virtualCircuit-DTE (18)**
  - **permanentVirtualCircuit-DTE (19)**
  - **x25PLEIVMO-DTE (20)**
  - **cLNS (21)**
  - **networkEntity (22)**
  - **linkage (23)**
  - **cONS (24)**
  - **x25PLE (25)**
  - **x25PLEIVMO (26)**
  - **x25PLE-DCE (27)**
  - **x25PLEIVMO-DCE (28)**
  - **virtualCircuit-DCE (29)**
  - **permanentVirtualCircuit-DCE (30)**
  - **virtualCall-DCE (31)**
  - **dSeriesCounts (32)**
- **package (4)**
  - **cLNSChecksum-P (1)**
  - ***obsolete (2)***
  - ***obsolete (3)***
  - **linkage-ISO8473-ISO8208SNDCF-P (4)**
  - **linkageIdleTimer-P (5)**
  - **linkageReserveTimer-P (6)**
  - **linkageInitialMinimumTimer-P (7)**
  - ***obsolete (8)***
  - **linkageCODLService-P (9)**
  - ***obsolete (10)***
  - **onlineRegistration-P (11)**
  - **receivingWindowRotationRecoveryProcedures-P (12)**
  - **transmittingWindowRotationRecoveryProcedures-P (13)**
  - **packetRetransmissionProcedures-P (14)**
  - ***obsolete (15)***
  - ***obsolete (16)***
  - **linkage-ISO9542Checksum-P (17)**
  - **dTEX25PLECounters-P (18)**
  - **dTEVirtualCircuitCounters-P (19)**
  - **cLNS8473-P (20)**
  - **linkage-ISO9542ES-P (21)**
  - **linkage-ISO9542IS-P (22)**
  - **dCECommonVirtualCircuitCounters-P (23)**
  - **dCEVirtualCallFacilities-P (24)**
  - **dCEX25PLETimers-P (25)**
  - **dCEX25PLEFacilities-P (26)**
- **parameter (5)**
  - **notificationPDUHeader (1)**
  - ***obsolete (2)***
  - ***obsolete (3)***
  - ***obsolete (4)***
  - ***obsolete (5)***
  - ***obsolete (6)***
  - **notificationData (7)**

Copyright International Organization for Standardization
Provided by IHS under license with ISO
No reproduction or networking permitted without license from IHS
Not for Resale

obsolete (8)
obsolete (9)
obsolete (10)
obsolete (11)
reachabilityChange (12)
nameBinding (6)
networkSubsystem-system (1)
obsolete (2)
cLNS-networkEntity-Management (3)
nSAP-networkSubsystem-Automatic (4)
nSAP-networkSubsystem-Management (5)
obsolete (6)
obsolete (7)
cONS-networkEntity-Management (8)
x25PLE-networkSubsystem-Management (9)
x25PLEIVMO-networkSubsystem (10)
obsolete (11)
obsolete (12)
obsolete (13)
obsolete (14)
obsolete (15)
cLNS-networkEntity-Automatic (16)
cONS-networkEntity-Automatic (17)
x25PLE-networkSubsystem-Automatic (18)
networkConnection-cONS (19)
linkage-cLNS-Management (20)
linkage-cONS-Management (21)
linkage-cLNS-Automatic (22)
linkage-cONS-Automatic (23)
virtualCall-DTE-x25PLE-DTE (24)
virtualCallIVMO-x25PLE (25)
permanentVirtualCircuit-DTE-x25PLE-DTE (26)
networkEntity-networkSubsystem-Automatic (27)
networkEntity-networkSubsystem-Management (28)
permanentVirtualCircuit-DCE-x25PLE-DCE (29)
virtualCall-DCE-x25PLE-DCE-Automatic (30)
virtualCall-DCE-x25PLE-DCE-Management (31)
dSeriesCounts-virtualCall-DCE-Automatic (32)
dSeriesCounts-virtualCall-DCE-Management (33)
attribute (7)
obsolete (1)
obsolete (2)
networkEntityTitles (3)
enableChecksum (4)
obsolete (5)
segmentsReceived (6)
segmentsDiscarded (7)
assemblingSegmentsDiscarded (8)
errorReportsReceived (9)
pDUDiscards (10)
congestionDiscards (11)
obsolete (12)
obsolete (13)
obsolete (14)
obsolete (15)
obsolete (16)
linkageId (17)
sN-SAP (18)
sN-ServiceProvider (19)
holdingTimerMultiplier (20)
defaultESConfigTimer (21)
activeESConfigTimer (22)
iSReachabilityChanges (23)
iSConfigurationTimer (24)
suggestedESConfigurationTimer (25)
redirectHoldingTime (26)
eSReachabilityChanges (27)
manualISSNPAAddress (28)

Copyright International Organization for Standardization
Provided by IHS under license with ISO
No reproduction or networking permitted without license from IHS
Not for Resale

callsPlaced (29)
callsFailed (30)
idleTimer (31)
reserveTimer (32)
initialMinimumTimer (33)
obsolete (34)
obsolete (35)
x25PLEId (36)
x25PLEIVMOId (37)
protocolVersionSupported (38)
localDTEAddress (39)
obsolete (40)
maxActiveCircuits (41)
restartRequestResponseTimer (42)
minimumRecallTimer (43)
registrationRequestResponseTimer (44)
restartRequestRetransmissionCount (45)
registrationRequestRetransmissionCount (46)
obsolete (47)
logicalChannelAssignments (48)
extendedPacketSequenceNumbering (49)
dataPacketsSent (50)
dataPacketsReceived (51)
callAttempts (52)
callsConnected (53)
providerInitiatedDisconnects (54)
callTimeouts (55)
clearTimeouts (56)
remotelyInitiatedResets (57)
dataRetransmissionTimerExpiries (58)
providerInitiatedResets (59)
resetTimeouts (60)
remotelyInitiatedRestarts (61)
restartCountsExceeded (62)
protocolErrorsDetectedLocally (63)
protocolErrorsAccusedOf (64)
callEstablishmentRetryCountsExceeded (65)
clearCountsExceeded (66)
interruptPacketsSent (67)
interruptPacketsReceived (68)
interruptTimerExpiries (69)
obsolete (70)
obsolete (71)
obsolete (72)
obsolete (73)
obsolete (74)
reverseCharging (75)
fastSelect (76)
callRequestResponseTimer (77)
resetRequestResponseTimer (78)
clearRequestResponseTimer (79)
resetRequestRetransmissionCount (80)
clearRequestRetransmissionCount (81)
interruptResponseTimer (82)
windowStatusTransmissionTimer (83)
windowRotationTimer (84)
dataPacketRetransmissionCount (85)
rejectResponseTimer (86)
rejectRetransmissionCount (87)
obsolete (88)
logicalChannel (89)
obsolete (90)
obsolete (91)
direction (92)
remoteDTEAddress (93)
obsolete (94)
obsolete (95)
throughputClasses (96)

Copyright International Organization for Standardization
Provided by IHS under license with ISO
No reproduction or networking permitted without license from IHS
Not for Resale

redirectReason (97)
originallyCalledAddress (98)
callingAddressExtension (99)
calledAddressExtension (100)
invalid9542PDUs (101)
maximumLifetime (102)
defaultPacketSizes (103)
defaultWindowSizes (104)
registrationPermitted (105)
localINSAPMO (106)
remoteNSAPAddress (107)
systemTypes (108)
operationalSystemType (109)
supportedProtocols (110)
operationalProtocols (111)
defaultThroughputClasses (112)
obsolete (113)
callDeflectionSubscription (114)
iSO9542OperationalSubsets (115)
virtualCircuitId (116)
virtualCallIVMOId (117)
segmentsSent (118)
flowControlParameterNegotiation (119)
x25PLEMode (120)
packetSizes (121)
obsolete (122)
obsolete (123)
windowSizes (124)
bilateralCUG (125)
bilateralCUGSelection (126)
bilateralCUGWithOutgoingAccess (127)
calledLineAddressModifiedNotification (128)
callRedirection (129)
callRedirectionDeflectionNotification (130)
chargingDirection (131)
chargingInformation (132)
clearIndication (133)
cUG (134)
cUGSelection (135)
cUGWithIncomingAccess (136)
cUGWithOutgoingAccess (137)
cUGWithOutgoingAccessSelection (138)
dBitModification (139)
dSeriesId (140)
dSeriesResetRequestIndicationPackets (141)
dSeriesSegmentsSent (142)
dSeriesSegmentsReceived (143)
defaultThroughputClassesAssignment (144)
fastSelectAcceptance (145)
huntGroup (146)
incomingCall (147)
incomingCallsBarred (148)
incomingCallBarredWithinCUG (149)
localChargingPrevention (150)
nonStandardDefaultPacketSizes (151)
nonStandardDefaultWindowSizes (152)
nUISubscription (153)
nUIOverride (154)
nUISelection (155)
oneWayLogicalChannelIncoming (156)
oneWayLogicalChannelOutgoing (157)
onlineFacilityRegistration (158)
outgoingCallsBarred (159)
outgoingCallBarredWithinCUG (160)
packetRetransmission (161)
remoteLogicalChannel (162)
resetIndication (163)
restartIndication (164)

Copyright International Organization for Standardization
Provided by IHS under license with ISO
No reproduction or networking permitted without license from IHS
Not for Resale

```
        reverseChargingAcceptance (165)
        rPOASelection (166)
        rPOASubscription (167)
        throughputClassNegotiation (168)
        transitDelaySelectionAndIndication (169)
        x25SegmentsSent (170)
        x25SegmentsReceived (171)
    attributeGroup (8)
    action (9)
    notification (10)
END
```


Copyright International Organization for Standardization
Provided by IHS under license with ISO
No reproduction or networking permitted without license from IHS
Not for Resale

Annex B

Shorthand description of Managed Objects

(This annex forms an integral part of this Recommendation | International Standard)

The information in this annex is intended only to give a broad outline of the Network Layer Management Specification. While the information contained herein has been derived from the normative GDMO text in the body of this Recommendation | International Standard, it should be treated with caution, as there may be errors.

The following abbreviations are used to describe the property lists of attributes.

G	Get
R	Replace
RWD	Replace With Default
A	Add
RM	Remove

The following abbreviations are used for external label references

DMI:	"CCITT Rec. X.721 (1992) | ISO/IEC 10165-2:1992"
GMI:	"ITU-T Rec. X.723 (1993) | ISO/IEC 10165-5:1994"

Template types with a '*' suffix (for example ATTRIBUTE*) refer to template types defined in conditional packages. All inherited templates, except those inherited from 'top', are included in each Managed Object Class.

The inheritance hierarchy is illustrated in Figure B.1.

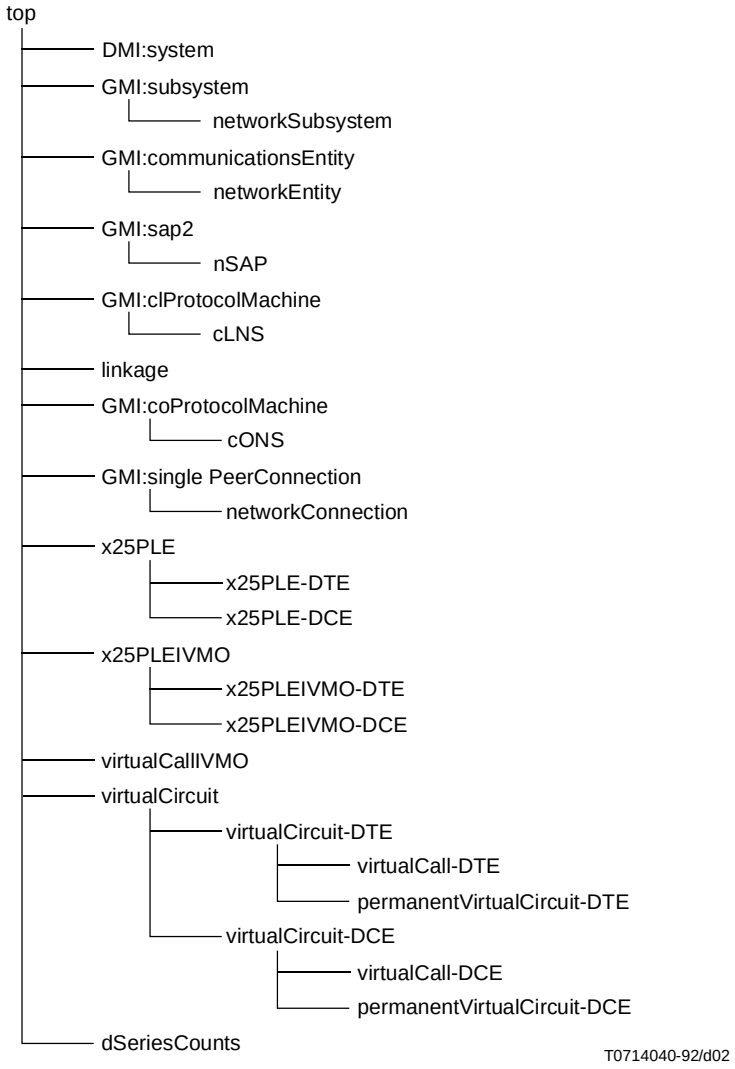

Figure B.1 – Network Layer Inheritance Hierarchy

Copyright International Organization for Standardization
Provided by IHS under license with ISO
No reproduction or networking permitted without license from IHS
Not for Resale

MANAGED OBJECT CLASS networkSubsystem DERIVED FROM (GMI:subsystem) CONTAINED IN (DMI:system)
GMI:subsystemId ATTRIBUTE (G)
END MANAGED OBJECT CLASS networkSubsystem

MANAGED OBJECT CLASS networkEntity DERIVED FROM (GMI:communicationsEntity) CONTAINED IN (networkSubsystem)
DMI:objectCreation NOTIFICATION
DMI:objectDeletion NOTIFICATION
networkEntityTitles ATTRIBUTE (G, R, A, RM)
The set of Network Entity Titles
systemTypes ATTRIBUTE (G)
The set of system roles supported by this Network Entity.
END MANAGED OBJECT CLASS networkEntity

MANAGED OBJECT CLASS nSAP DERIVED FROM (GMI:sap2) CONTAINED IN (networkSubsystem)
DMI:objectCreation NOTIFICATION
DMI:objectDeletion NOTIFICATION
GMI:sap2Address ATTRIBUTE (G)
END MANAGED OBJECT CLASS nSAP

MANAGED OBJECT CLASS cLNS DERIVED FROM (GMI:clProtocolMachine) CONTAINED IN (networkEntity)
DMI:administrativeState ATTRIBUTE (G, R)
DMI:communicationsAlarm NOTIFICATION*
DMI:objectCreation NOTIFICATION
DMI:objectDeletion NOTIFICATION
DMI:octetsReceivedCounter ATTRIBUTE* (G)
DMI:octetsSentCounter ATTRIBUTE* (G)
DMI:stateChange NOTIFICATION
GMI:activate ACTION
GMI:clProtocolMachineId ATTRIBUTE (G)
GMI:deactivate ACTION
assemblingSegmentsDiscarded ATTRIBUTE* (G)
Counter of segments discarded due to reassembly time expiry.
congestionDiscards ATTRIBUTE* (G)
Counter of PDUs discarded due to congestion.
enableChecksum ATTRIBUTE* (G, R, RWD)
When True, the generation of checksums is enabled.
errorReportsReceived ATTRIBUTE* (G)
Counter of received error reports.
maximumLifetime ATTRIBUTE* (G, R)
Maximum PDU lifetime (in half seconds).
operationalSystemType ATTRIBUTE (G)
The system role in which this instance is operating.
pDUDiscards ATTRIBUTE* (G)
Counter of PDUs discarded (except for congestion).
segmentsDiscarded ATTRIBUTE* (G)
Counter of segments discarded.
segmentsReceived ATTRIBUTE* (G)
Counter of segments received.
segmentsSent ATTRIBUTE* (G)
Counter of segments Sent.
supportedProtocols ATTRIBUTE (G)
The set of Connectionless Network protocols supported
END MANAGED OBJECT CLASS cLNS

MANAGED OBJECT CLASS linkage DERIVED FROM (DMI:top) CONTAINED IN (cONS, cLNS)
DMI:administrativeState ATTRIBUTE (G, R)
DMI:communicationsAlarm NOTIFICATION*
DMI:objectCreation NOTIFICATION
DMI:objectDeletion NOTIFICATION
DMI:operationalState ATTRIBUTE (G)
DMI:stateChange NOTIFICATION
GMI:activate ACTION
GMI:communicationsInformation NOTIFICATION*
GMI:deactivate ACTION
activeESConfigTimer ATTRIBUTE* (G)
Currently active value for the ISO 9542 ES configuration timer
callsFailed ATTRIBUTE* (G)
Counter of the number of X.25 call failures

Copyright International Organization for Standardization
Provided by IHS under license with ISO
No reproduction or networking permitted without license from IHS
Not for Resale

callsPlaced ATTRIBUTE* (G)
Counter of the number of X.25 VCs successfully established
defaultESConfigTimer ATTRIBUTE* (G, R, RWD)
Default value for the ISO 9542 ES configuration timer
eSReachabilityChanges ATTRIBUTE* (G)
Count of the number of changes in reachability of End Sytems
enableChecksum ATTRIBUTE* (G, R, RWD)
When True, the generation of checksums is enabled.
holdingTimerMultiplier ATTRIBUTE* (G, R, RWD)
The factor to derive holding timer from configuration timer.
iSConfigurationTimer ATTRIBUTE* (G, R, RWD)
Value in seconds for the ISO 9542 IS configuration timer.
iSO9542OperationalSubsets ATTRIBUTE* (G, R)
The set of ISO 9542 subsets operational on this linkage.
iSReachabilityChanges ATTRIBUTE* (G)
Counter of the number of changes in reachability of Intermediate Systems
idleTimer ATTRIBUTE* (G, R, RWD)
Time in seconds before release of an idle call.
initialMinimumTimer ATTRIBUTE* (G, R, RWD)
Minimum time in seconds to retain call after establishment.
invalid9542PDUs ATTRIBUTE* (G)
Counter of invalid 9542 PDUs received.
linkageId ATTRIBUTE (G)
The naming attribute of the linkage MO instance
manualISSNPAAddress ATTRIBUTE* (G, R, RWD, A, RM)
The set of SNPA Addresses to which calls associated with the SNDCF are to established
operationalProtocols ATTRIBUTE (G)
The set of network layer protocols supported
redirectHoldingTime ATTRIBUTE* (G, R, RWD)
The holding time (in seconds) to be specified in Redirect PDUs
reserveTimer ATTRIBUTE* (G, R, RWD)
Time in seconds to reserve resources for call re-establishment.
sN-SAP ATTRIBUTE (G)
Distinguished name of the service provider SAP MO
sN-ServiceProvider ATTRIBUTE (G)
Distinguished name of the SN service provider MO.
suggestedESConfigurationTimer ATTRIBUTE* (G, R, RWD)
Value to be used for the ISO 9542 suggested ES configuration timer
END MANAGED OBJECT CLASS linkage

MANAGED OBJECT CLASS cONS DERIVED FROM (GMI:coProtocolMachine) CONTAINED IN (networkEntity)
DMI:administrativeState ATTRIBUTE (G, R)
DMI:objectCreation NOTIFICATION
DMI:objectDeletion NOTIFICATION
DMI:stateChange NOTIFICATION
GMI:activate ACTION
GMI:coProtocolMachineId ATTRIBUTE (G)
GMI:deactivate ACTION
GMI:deactivateWhenNoUsers ACTION
operationalSystemType ATTRIBUTE (G)
The system role in which this instance is operating.
END MANAGED OBJECT CLASS cONS

MANAGED OBJECT CLASS networkConnection DERIVED FROM (GMI:singlePeerConnection) CONTAINED IN (cONS)
DMI:objectCreation NOTIFICATION
DMI:objectDeletion NOTIFICATION
GMI:communicationsInformation NOTIFICATION
GMI:deactivate ACTION
localNSAPMO ATTRIBUTE (G)
Pointer to local nSAP MO.
remoteNSAPAddress ATTRIBUTE (G)
The remote NSAP Address
END MANAGED OBJECT CLASS networkConnection

Copyright International Organization for Standardization
Provided by IHS under license with ISO
No reproduction or networking permitted without license from IHS
Not for Resale

MANAGED OBJECT CLASS x25PLE DERIVED FROM (DMI:top) CONTAINED IN (networkSubsystem)
DMI:administrativeState ATTRIBUTE (G, R)
DMI:objectCreation NOTIFICATION
DMI:objectDeletion NOTIFICATION
DMI:operationalState ATTRIBUTE (G)
DMI:stateChange NOTIFICATION
GMI:activate ACTION
GMI:deactivate ACTION
defaultPacketSizes ATTRIBUTE (G, R, RWD)
The default value of the packet sizes.
defaultThroughputClasses ATTRIBUTE (G, R, RWD)
The default throughput class values.
defaultWindowSizes ATTRIBUTE (G, R, RWD)
The default value of the window sizes.
flowControlParameterNegotiation ATTRIBUTE (G, R, RWD)
The subscription of the flow control parameter negotiation facility
localDTEAddress ATTRIBUTE (G, R)
The full DTE address of this PLE
logicalChannelAssignments ATTRIBUTE (G, R)
Represents the logical channel assignments of this PLE,
protocolVersionSupported ATTRIBUTE (G)
The supported Recommendation | International Standard protocol version
sN-SAP ATTRIBUTE (G)
Distinguished name of the service provider SAP MO
sN-ServiceProvider ATTRIBUTE (G, R, RWD)
Distinguished name of the SN service provider MO.
throughputClassNegotiation ATTRIBUTE (G, R, RWD)
The subscription of the throughput class negotiation facility
x25PLEId ATTRIBUTE (G)
The name of this instance of x25PLE MO
x25PLEMode ATTRIBUTE (G, R)
The DCE/DTE mode in which the X.25 PLE is currently operating.
END MANAGED OBJECT CLASS x25PLE

MANAGED OBJECT CLASS x25PLEIVMO DERIVED FROM (DMI:top) CONTAINED IN (networkSubsystem)
DMI:objectCreation NOTIFICATION
DMI:objectDeletion NOTIFICATION
defaultPacketSizes ATTRIBUTE (G, R, RWD)
The default value of the packet sizes.
defaultThroughputClasses ATTRIBUTE (G, R, RWD)
The default throughput class values.
defaultWindowSizes ATTRIBUTE (G, R, RWD)
The default value of the window sizes.
flowControlParameterNegotiation ATTRIBUTE (G, R, RWD)
The subscription of the flow control parameter negotiation facility
localDTEAddress ATTRIBUTE (G, R)
The full DTE address of this PLE
logicalChannelAssignments ATTRIBUTE (G, R)
Represents the logical channel assignments of this PLE,
sN-ServiceProvider ATTRIBUTE (G, R)
Distinguished name of the SN service provider MO.
throughputClassNegotiation ATTRIBUTE (G, R, RWD)
The subscription of the throughput class negotiation facility
x25PLEIVMOId ATTRIBUTE (G)
The name of this instance of x25PLE IVMO
x25PLEMode ATTRIBUTE (G, R)
The DCE/DTE mode in which the X.25 PLE is currently operating.
END MANAGED OBJECT CLASS x25PLEIVMO

MANAGED OBJECT CLASS x25PLE-DTE DERIVED FROM (x25PLE)
DMI:administrativeState ATTRIBUTE (G, R)
DMI:communicationsAlarm NOTIFICATION
DMI:objectCreation NOTIFICATION
DMI:objectDeletion NOTIFICATION
DMI:octetsReceivedCounter ATTRIBUTE* (G)
DMI:octetsSentCounter ATTRIBUTE* (G)
DMI:operationalState ATTRIBUTE (G)
DMI:stateChange NOTIFICATION

Copyright International Organization for Standardization
Provided by IHS under license with ISO
No reproduction or networking permitted without license from IHS
Not for Resale

GMI:activate ACTION
GMI:deactivate ACTION
callAttempts ATTRIBUTE (G)
Counter of the total number of calls attempted
callDeflectionSubscription ATTRIBUTE (G, R, RWD)
The subscription of the call deflection facility
callEstablishmentRetryCountsExceeded ATTRIBUTE (G)
Counter associated with the callEstablishmentRetryCountExceeded event
callRequestResponseTimer ATTRIBUTE (G, R, RWD)
Value for Timer T21 (Call Request Response Timer)
callTimeouts ATTRIBUTE* (G)
Counter of the number of times timer T21 expiry is experienced
callsConnected ATTRIBUTE* (G)
Counter of the total number of calls which have reached the open state
clearCountsExceeded ATTRIBUTE* (G)
Counter associated with the clearCountExceeded event
clearRequestResponseTimer ATTRIBUTE (G, R, RWD)
Value for Timer T23 (Clear Request Response Timer)
clearRequestRetransmissionCount ATTRIBUTE (G, R, RWD)
Value for count R23 (Clear Request Retransmission Count)
clearTimeouts ATTRIBUTE* (G)
Counter of the number of times timer T23 expiry is experienced
dataPacketRetransmissionCount ATTRIBUTE* (G, R, RWD)
Value for count R25 (Data Packet Retransmission Count)
dataPacketsReceived ATTRIBUTE* (G)
Counter of the total number of data packets received
dataPacketsSent ATTRIBUTE* (G)
Counter of the total number of data packets sent
dataRetransmissionTimerExpiries ATTRIBUTE* (G)
Counter of the number of expiries of timer T25.
defaultPacketSizes ATTRIBUTE (G, R, RWD)
The default value of the packet sizes.
defaultThroughputClasses ATTRIBUTE (G, R, RWD)
The default throughput class values.
defaultWindowSizes ATTRIBUTE (G, R, RWD)
The default value of the window sizes.
extendedPacketSequenceNumbering ATTRIBUTE (G, R, RWD)
The modulo of the packet sequence number space.
flowControlParameterNegotiation ATTRIBUTE (G, R, RWD)
The subscription of the flow control parameter negotiation facility
interruptResponseTimer ATTRIBUTE (G, R, RWD)
Value for Timer T26 (Interrupt Response Timer) in seconds
localDTEAddress ATTRIBUTE (G, R)
The full DTE address of this PLE
logicalChannelAssignments ATTRIBUTE (G, R)
Represents the logical channel assignments of this PLE,
maxActiveCircuits ATTRIBUTE (G, R, RWD)
The maximum number of active circuits permitted on this PLE.
minimumRecallTimer ATTRIBUTE (G, R, RWD)
Minimum time in seconds before recall permitted.
protocolErrorsAccusedOf ATTRIBUTE (G)
Counter associated with the accusedOfProtocolError event
protocolErrorsDetectedLocally ATTRIBUTE (G)
Counter associated with the protocolErrorDetectedLocally event
protocolVersionSupported ATTRIBUTE (G)
The supported Recommendation | International Standard protocol version
providerInitiatedDisconnects ATTRIBUTE* (G)
Counter for the providerInitiatedDisconnect events
providerInitiatedResets ATTRIBUTE* (G)
Counter associated with the providerInitiatedReset event
registrationPermitted ATTRIBUTE* (G, R, RWD)
When true, the use of online facility registration is permitted.
registrationRequestResponseTimer ATTRIBUTE* (G, R, RWD)
Value for Timer T28 (Registration Request Response Timer) in seconds
registrationRequestRetransmissionCount ATTRIBUTE* (G, R, RWD)
Value for count R28 (Registration Request Retransmission Count)
rejectResponseTimer ATTRIBUTE* (G, R, RWD)
Value for Timer T27 (Reject Response Timer) in seconds

Copyright International Organization for Standardization
Provided by IHS under license with ISO
No reproduction or networking permitted without license from IHS
Not for Resale

rejectRetransmissionCount ATTRIBUTE* (G, R, RWD)
Value for count R27 (Reject Retransmission Count)
remotelyInitiatedResets ATTRIBUTE* (G)
Counter associated with the remotelyInitiatedReset event
remotelyInitiatedRestarts ATTRIBUTE* (G)
Counter of the number of remotely initiated restarts.
resetRequestResponseTimer ATTRIBUTE (G, R, RWD)
Value for Timer T22 (Reset Request Response Timer) in seconds
resetRequestRetransmissionCount ATTRIBUTE (G, R, RWD)
Value for count R22 (Reset Request Retransmission Count)
resetTimeouts ATTRIBUTE* (G)
Counter of the number of timer T22 expiries experienced
restartCountsExceeded ATTRIBUTE* (G)
Counter associated with the restartCountExceeded event
restartRequestResponseTimer ATTRIBUTE (G, R, RWD)
Value for Timer T20 (Restart Request Response Timer) in seconds
restartRequestRetransmissionCount ATTRIBUTE (G, R, RWD)
Value for count R20 (Restart Request Retransmission Count)
sN-SAP ATTRIBUTE (G)
Distinguished name of the service provider SAP MO
sN-ServiceProvider ATTRIBUTE (G, R, RWD)
Distinguished name of the N service provider MO.
throughputClassNegotiation ATTRIBUTE (G, R, RWD)
The subscription of the throughput class negotiation facility
windowRotationTimer ATTRIBUTE* (G, R, RWD)
Default for Timer T25 (Window Rotation Timer) in seconds
windowStatusTransmissionTimer ATTRIBUTE* (G, R, RWD)
Value for Timer T24 (Window Status Transmission Timer) in seconds
x25PLEId ATTRIBUTE (G)
The name of this instance of x25PLE MO
x25PLEMode ATTRIBUTE (G, R)
The DCE/DTE mode in which the X.25 PLE is currently operating.
END MANAGED OBJECT CLASS x25PLE-DTE

MANAGED OBJECT CLASS x25PLE-DCE DERIVED FROM (x25PLE)
DMI:administrativeState ATTRIBUTE (G, R)
DMI:objectCreation NOTIFICATION
DMI:objectDeletion NOTIFICATION
DMI:octetsReceivedCounter ATTRIBUTE* (G)
DMI:octetsSentCounter ATTRIBUTE* (G)
DMI:operationalState ATTRIBUTE (G)
DMI:stateChange NOTIFICATION
GMI:activate ACTION
GMI:deactivate ACTION
bilateralCUG ATTRIBUTE* (G, R, RWD)
The subscription of the bilateral closed user group facility
bilateralCUGWithOutgoingAccess ATTRIBUTE* (G, R, RWD)
The subscription of the bilateral CUG with outgoing access facility
cUG ATTRIBUTE (G, R, RWD)
The subscription of the closed user group facility
cUGWithIncomingAccess ATTRIBUTE* (G, R, RWD)
The subscription of the closed user group with incoming access facility
cUGWithOutgoingAccess ATTRIBUTE* (G, R, RWD)
The subscription of the CUG with outgoing access facility
callAttempts ATTRIBUTE (G)
Counter of the total number of calls attempted
callDeflectionSubscription ATTRIBUTE* (G, R, RWD)
The subscription of the call deflection facility
callRedirection ATTRIBUTE* (G, R, RWD)
The subscription of the call redirection facility
callsConnected ATTRIBUTE (G)
Counter of the total number of calls which have reached the open state
chargingInformation ATTRIBUTE* (G, R, RWD)
The subscription of the charging information facility
clearIndication ATTRIBUTE* (G, R)
Value for the Clear Indication, T13 timer, in seconds.
dBitModification ATTRIBUTE* (G, R, RWD)
The subscription of the D bit modification facility

Copyright International Organization for Standardization
Provided by IHS under license with ISO
No reproduction or networking permitted without license from IHS
Not for Resale

dataPacketsReceived ATTRIBUTE* (G)
Counter of the total number of data packets received
dataPacketsSent ATTRIBUTE* (G)
Counter of the total number of data packets sent
defaultPacketSizes ATTRIBUTE (G, R, RWD)
The default value of the packet sizes.
defaultThroughputClasses ATTRIBUTE (G, R, RWD)
The default throughput class values.
defaultThroughputClassesAssignment ATTRIBUTE* (G, R, RWD)
The subscription of the default throughput classes assignment facility
defaultWindowSizes ATTRIBUTE (G, R, RWD)
The default value of the window sizes.
extendedPacketSequenceNumbering ATTRIBUTE* (G, R, RWD)
The modulo of the packet sequence number space.
fastSelectAcceptance ATTRIBUTE (G, R, RWD)
The subscription of the fast select acceptance
flowControlParameterNegotiation ATTRIBUTE (G, R, RWD)
The subscription of the flow control parameter negotiation facility
huntGroup ATTRIBUTE* (G, R, RWD)
The subscription of the hunt group facility
incomingCall ATTRIBUTE* (G, R)
Value for the Incoming Call, T11 timer, in seconds.
incomingCallBarredWithinCUG ATTRIBUTE* (G, R, RWD)
The subscription of the incoming call barred within a CUG facility
incomingCallsBarred ATTRIBUTE (G, R, RWD)
The subscription of the incoming calls barred facility
interruptPacketsReceived ATTRIBUTE* (G)
Counter of the number of interrupt packets received
interruptPacketsSent ATTRIBUTE* (G)
Counter of the number of interrupt packets sent
interruptTimerExpiries ATTRIBUTE* (G)
Counter of the number of expiries of timer T26
localChargingPrevention ATTRIBUTE* (G, R, RWD)
The subscription of the local charging prevention facility
localDTEAddress ATTRIBUTE (G, R)
The full DTE address of this PLE
logicalChannelAssignments ATTRIBUTE (G, R)
Represents the logical channel assignments of this PLE,
nUIOverride ATTRIBUTE* (G, R, RWD)
The subscription of the NUI override facility
nUISubscription ATTRIBUTE* (G, R, RWD)
The subscription of the NUI subscription facility
nonStandardDefaultPacketSizes ATTRIBUTE* (G, R, RWD)
The subscription of the non standard default packet sizes facility
nonStandardDefaultWindowSizes ATTRIBUTE* (G, R, RWD)
The subscription of the non standard default window sizes facility
oneWayLogicalChannelIncoming ATTRIBUTE* (G, R, RWD)
The subscription of the one way logical channel incoming facility
oneWayLogicalChannelOutgoing ATTRIBUTE (G, R, RWD)
The subscription of the one way logical channel outgoing facility
onlineFacilityRegistration ATTRIBUTE* (G, R, RWD)
The subscription of the on-line facility registration facility
outgoingCallBarredWithinCUG ATTRIBUTE* (G, R, RWD)
The subscription of the outgoing call barred with a CUG facility
outgoingCallsBarred ATTRIBUTE (G, R, RWD)
The subscription of the outgoing calls barred facility
packetRetransmission ATTRIBUTE* (G, R, RWD)
The subscription of the packet retransmissions facility
protocolVersionSupported ATTRIBUTE (G)
The supported Recommendation | International Standard protocol version
providerInitiatedDisconnects ATTRIBUTE* (G)
Counter for the providerInitiatedDisconnect events
providerInitiatedResets ATTRIBUTE* (G)
Counter associated with the providerInitiatedReset event
rPOASubscription ATTRIBUTE* (G, R, RWD)
The subscription of the RPOA Subscription facility
remotelyInitiatedResets ATTRIBUTE* (G)
Counter associated with the remotelyInitiatedReset event

Copyright International Organization for Standardization
Provided by IHS under license with ISO
No reproduction or networking permitted without license from IHS
Not for Resale

remotelyInitiatedRestarts ATTRIBUTE* (G)
Counter of the number of remotely initiated restarts.
resetIndication ATTRIBUTE* (G, R)
Value for the Reset Indication, T12 timer, in seconds.
resetTimeouts ATTRIBUTE* (G)
Counter of the number of timer T22 expiries experienced
restartIndication ATTRIBUTE* (G, R)
Value for the Restart Indication, T10 timer, in seconds.
reverseChargingAcceptance ATTRIBUTE* (G, R, RWD)
The subscription of the reverse charging acceptance facility
sN-SAP ATTRIBUTE (G)
Distinguished name of the service provider SAP MO
sN-ServiceProvider ATTRIBUTE (G, R, RWD)
Distinguished name of the SN service provider MO.
throughputClassNegotiation ATTRIBUTE (G, R, RWD)
The subscription of the throughput class negotiation facility
x25PLEId ATTRIBUTE (G)
The name of this instance of x25PLE MO
x25PLEMode ATTRIBUTE (G, R)
The DCE/DTE mode in which the X.25 PLE is currently operating.
x25SegmentsReceived ATTRIBUTE* (G)
Value for count of X.25 Segments Received.
x25SegmentsSent ATTRIBUTE* (G)
Value for count of X.25 Segments Sent.
END MANAGED OBJECT CLASS x25PLE-DCE

MANAGED OBJECT CLASS x25PLEIVMO-DTE DERIVED FROM (x25PLEIVMO)
DMI:objectCreation NOTIFICATION
DMI:objectDeletion NOTIFICATION
callDeflectionSubscription ATTRIBUTE (G, R, RWD)
The subscription of the call deflection facility
callRequestResponseTimer ATTRIBUTE (G, R, RWD)
Value for Timer T21 (Call Request Response Timer)
clearRequestResponseTimer ATTRIBUTE (G, R, RWD)
Value for Timer T23 (Clear Request Response Timer)
clearRequestRetransmissionCount ATTRIBUTE (G, R, RWD)
Value for count R23 (Clear Request Retransmission Count)
dataPacketRetransmissionCount ATTRIBUTE* (G, R, RWD)
Value for count R25 (Data Packet Retransmission Count)
defaultPacketSizes ATTRIBUTE (G, R, RWD)
The default value of the packet sizes.
defaultThroughputClasses ATTRIBUTE (G, R, RWD)
The default throughput class values.
defaultWindowSizes ATTRIBUTE (G, R, RWD)
The default value of the window sizes.
extendedPacketSequenceNumbering ATTRIBUTE (G, R, RWD)
The modulo of the packet sequence number space.
flowControlParameterNegotiation ATTRIBUTE (G, R, RWD)
The subscription of the flow control parameter negotiation facility
interruptResponseTimer ATTRIBUTE (G, R, RWD)
Value for Timer T26 (Interrupt Response Timer) in seconds
localDTEAddress ATTRIBUTE (G, R)
The full DTE address of this PLE
logicalChannelAssignments ATTRIBUTE (G, R)
Represents the logical channel assignments of this PLE,
maxActiveCircuits ATTRIBUTE (G, R, RWD)
The maximum number of active circuits permitted on this PLE.
minimumRecallTimer ATTRIBUTE (G, R, RWD)
Minimum time in seconds before recall permitted.
registrationPermitted ATTRIBUTE* (G, R, RWD)
When true, the use of online facility registration is permitted.
registrationRequestResponseTimer ATTRIBUTE* (G, R, RWD)
Value for Timer T28 (Registration Request Response Timer) in seconds
registrationRequestRetransmissionCount ATTRIBUTE* (G, R, RWD)
Value for count R28 (Registration Request Retransmission Count)
rejectResponseTimer ATTRIBUTE* (G, R, RWD)
Value for Timer T27 (Reject Response Timer) in seconds

Copyright International Organization for Standardization
Provided by IHS under license with ISO
No reproduction or networking permitted without license from IHS
Not for Resale

rejectRetransmissionCount ATTRIBUTE* (G, R, RWD)
Value for count R27 (Reject Retransmission Count)
resetRequestResponseTimer ATTRIBUTE (G, R, RWD)
Value for Timer T22 (Reset Request Response Timer) in seconds
resetRequestRetransmissionCount ATTRIBUTE (G, R, RWD)
Value for count R22 (Reset Request Retransmission Count)
restartRequestResponseTimer ATTRIBUTE (G, R, RWD)
Value for Timer T20 (Restart Request Response Timer) in seconds
restartRequestRetransmissionCount ATTRIBUTE (G, R, RWD)
Value for count R20 (Restart Request Retransmission Count)
sN-ServiceProvider ATTRIBUTE (G, R)
Distinguished name of the SN service provider MO.
throughputClassNegotiation ATTRIBUTE (G, R, RWD)
The subscription of the throughput class negotiation facility
windowRotationTimer ATTRIBUTE* (G, R, RWD)
Default for Timer T25 (Window Rotation Timer) in seconds
windowStatusTransmissionTimer ATTRIBUTE* (G, R, RWD)
Value for Timer T24 (Window Status Transmission Timer) in seconds
x25PLEIVMOId ATTRIBUTE (G)
The name of this instance of x25PLE IVMO
x25PLEMode ATTRIBUTE (G, R)
The DCE/DTE mode in which the X.25 PLE is currently operating.
END MANAGED OBJECT CLASS x25PLEIVMO-DTE

MANAGED OBJECT CLASS x25PLEIVMO-DCE DERIVED FROM (x25PLEIVMO)
DMI:objectCreation NOTIFICATION
DMI:objectDeletion NOTIFICATION
defaultPacketSizes ATTRIBUTE (G, R, RWD)
The default value of the packet sizes.
defaultThroughputClasses ATTRIBUTE (G, R, RWD)
The default throughput class values.
defaultWindowSizes ATTRIBUTE (G, R, RWD)
The default value of the window sizes.
flowControlParameterNegotiation ATTRIBUTE (G, R, RWD)
The subscription of the flow control parameter negotiation facility
localDTEAddress ATTRIBUTE (G, R)
The full DTE address of this PLE
logicalChannelAssignments ATTRIBUTE (G, R)
Represents the logical channel assignments of this PLE,
sN-ServiceProvider ATTRIBUTE (G, R)
Distinguished name of the SN service provider MO.
throughputClassNegotiation ATTRIBUTE (G, R, RWD)
The subscription of the throughput class negotiation facility
x25PLEIVMOId ATTRIBUTE (G)
The name of this instance of x25PLE IVMO
x25PLEMode ATTRIBUTE (G, R)
The DCE/DTE mode in which the X.25 PLE is currently operating.
END MANAGED OBJECT CLASS x25PLEIVMO-DCE

MANAGED OBJECT CLASS virtualCircuit DERIVED FROM (DMI:top)
DMI:objectCreation NOTIFICATION
DMI:objectDeletion NOTIFICATION
logicalChannel ATTRIBUTE (G)
The actual Logical Channel ID used for the call
packetSizes ATTRIBUTE (G)
The packet sizes for this VC.
throughputClasses ATTRIBUTE (G)
The throughput classes in use or to be used.
virtualCircuitId ATTRIBUTE (G)
The name of this instance of virtualCircuit MO or subclass
windowSizes ATTRIBUTE (G)
The actual window sizes in use for this VC
END MANAGED OBJECT CLASS virtualCircuit

Copyright International Organization for Standardization
Provided by IHS under license with ISO
No reproduction or networking permitted without license from IHS
Not for Resale

MANAGED OBJECT CLASS virtualCircuit-DTE DERIVED FROM (virtualCircuit)
DMI:objectCreation NOTIFICATION
DMI:objectDeletion NOTIFICATION
DMI:octetsReceivedCounter ATTRIBUTE* (G)
DMI:octetsSentCounter ATTRIBUTE* (G)
dataPacketsReceived ATTRIBUTE* (G)
Counter of the total number of data packets received
dataPacketsSent ATTRIBUTE* (G)
Counter of the total number of data packets sent
dataRetransmissionTimerExpiries ATTRIBUTE* (G)
Counter of the number of expiries of timer T25.
interruptPacketsReceived ATTRIBUTE* (G)
Counter of the number of interrupt packets received
interruptPacketsSent ATTRIBUTE* (G)
Counter of the number of interrupt packets sent
interruptTimerExpiries ATTRIBUTE* (G)
Counter of the number of expiries of timer T26
logicalChannel ATTRIBUTE (G)
The actual Logical Channel ID used for the call
packetSizes ATTRIBUTE (G)
The packet sizes for this VC.
providerInitiatedResets ATTRIBUTE* (G)
Counter associated with the providerInitiatedReset event
remotelyInitiatedResets ATTRIBUTE* (G)
Counter associated with the remotelyInitiatedReset event
resetTimeouts ATTRIBUTE* (G)
Counter of the number of timer T22 expiries experienced
throughputClasses ATTRIBUTE (G)
The throughput classes in use or to be used.
virtualCircuitId ATTRIBUTE (G)
The name of this instance of virtualCircuit MO or subclass
windowSizes ATTRIBUTE (G)
The actual window sizes in use for this VC
END MANAGED OBJECT CLASS virtualCircuit-DTE

MANAGED OBJECT CLASS virtualCircuit-DCE DERIVED FROM (virtualCircuit)
DMI:objectCreation NOTIFICATION
DMI:objectDeletion NOTIFICATION
DMI:octetsReceivedCounter ATTRIBUTE* (G)
DMI:octetsSentCounter ATTRIBUTE* (G)
dataPacketsReceived ATTRIBUTE* (G)
Counter of the total number of data packets received
dataPacketsSent ATTRIBUTE* (G)
Counter of the total number of data packets sent
interruptPacketsReceived ATTRIBUTE* (G)
Counter of the number of interrupt packets received
interruptPacketsSent ATTRIBUTE* (G)
Counter of the number of interrupt packets sent
interruptTimerExpiries ATTRIBUTE* (G)
Counter of the number of expiries of timer T26
logicalChannel ATTRIBUTE (G)
The actual Logical Channel ID used for the call
packetSizes ATTRIBUTE (G)
The packet sizes for this VC.
providerInitiatedDisconnects ATTRIBUTE* (G)
Counter for the providerInitiatedDisconnect events
providerInitiatedResets ATTRIBUTE* (G)
Counter associated with the providerInitiatedReset event
remotelyInitiatedResets ATTRIBUTE* (G)
Counter associated with the remotelyInitiatedReset event
remotelyInitiatedRestarts ATTRIBUTE* (G)
Counter of the number of remotely initiated restarts.
resetTimeouts ATTRIBUTE* (G)
Counter of the number of timer T22 expiries experienced
throughputClasses ATTRIBUTE (G)
The throughput classes in use or to be used.
virtualCircuitId ATTRIBUTE (G)
The name of this instance of virtualCircuit MO or subclass

Copyright International Organization for Standardization
Provided by IHS under license with ISO
No reproduction or networking permitted without license from IHS
Not for Resale

windowSizes ATTRIBUTE (G)
The actual window sizes in use for this VC
x25SegmentsReceived ATTRIBUTE* (G)
Value for count of X.25 Segments Received.
x25SegmentsSent ATTRIBUTE* (G)
Value for count of X.25 Segments Sent.
END MANAGED OBJECT CLASS virtualCircuit-DCE

MANAGED OBJECT CLASS permanentVirtualCircuit-DTE DERIVED FROM (virtualCircuit-DTE) CONTAINED IN (x25PLE-DTE)
DMI:objectCreation NOTIFICATION
DMI:objectDeletion NOTIFICATION
DMI:octetsReceivedCounter ATTRIBUTE* (G)
DMI:octetsSentCounter ATTRIBUTE* (G)
dataPacketsReceived ATTRIBUTE* (G)
Counter of the total number of data packets received
dataPacketsSent ATTRIBUTE* (G)
Counter of the total number of data packets sent
dataRetransmissionTimerExpiries ATTRIBUTE* (G)
Counter of the number of expiries of timer T25.
interruptPacketsReceived ATTRIBUTE* (G)
Counter of the number of interrupt packets received
interruptPacketsSent ATTRIBUTE* (G)
Counter of the number of interrupt packets sent
interruptTimerExpiries ATTRIBUTE (G)
Counter of the number of expiries of timer T26
logicalChannel ATTRIBUTE (G)
The actual Logical Channel ID used for the call
packetSizes ATTRIBUTE (G)
The packet sizes for this VC.
providerInitiatedResets ATTRIBUTE* (G)
Counter associated with the providerInitiatedReset event
remotelyInitiatedResets ATTRIBUTE* (G)
Counter associated with the remotelyInitiatedReset event
resetTimeouts ATTRIBUTE (G)
Counter of the number of timer T22 expiries experienced
throughputClasses ATTRIBUTE (G)
The throughput classes in use or to be used.
virtualCircuitId ATTRIBUTE (G)
The name of this instance of virtualCircuit MO or subclass
windowSizes ATTRIBUTE (G)
The actual window sizes in use for this VC
END MANAGED OBJECT CLASS permanentVirtualCircuit-DTE

MANAGED OBJECT CLASS permanentVirtualCircuit-DCE DERIVED FROM (virtualCircuit-DCE) CONTAINED IN (x25PLE-DCE)
DMI:objectCreation NOTIFICATION
DMI:objectDeletion NOTIFICATION
DMI:octetsReceivedCounter ATTRIBUTE* (G)
DMI:octetsSentCounter ATTRIBUTE* (G)
DMI:operationalState ATTRIBUTE (G)
DMI:stateChange NOTIFICATION
chargingDirection ATTRIBUTE (G)
Indicates the use of the charging direction facility
dataPacketsReceived ATTRIBUTE* (G)
Counter of the total number of data packets received
dataPacketsSent ATTRIBUTE* (G)
Counter of the total number of data packets sent
interruptPacketsReceived ATTRIBUTE* (G)
Counter of the number of interrupt packets received
interruptPacketsSent ATTRIBUTE* (G)
Counter of the number of interrupt packets sent
interruptTimerExpiries ATTRIBUTE (G)
Counter of the number of expiries of timer T26
logicalChannel ATTRIBUTE (G)
The actual Logical Channel ID used for the call
packetSizes ATTRIBUTE (G)
The packet sizes for this VC.

--`,,```,,,,````-`-`,,`,,`,`,,`---

Copyright International Organization for Standardization
Provided by IHS under license with ISO
No reproduction or networking permitted without license from IHS
Not for Resale

providerInitiatedDisconnects ATTRIBUTE* (G)
Counter for the providerInitiatedDisconnect events
providerInitiatedResets ATTRIBUTE* (G)
Counter associated with the providerInitiatedReset event
remoteDTEAddress ATTRIBUTE (G)
The DTE Address of the remote DTE.
remoteLogicalChannel ATTRIBUTE (G)
The Remote Logical Channel ID for the Permanent Virtual Circuit.
remotelyInitiatedResets ATTRIBUTE* (G)
Counter associated with the remotelyInitiatedReset event
remotelyInitiatedRestarts ATTRIBUTE* (G)
Counter of the number of remotely initiated restarts.
resetTimeouts ATTRIBUTE (G)
Counter of the number of timer T22 expiries experienced
throughputClasses ATTRIBUTE (G)
The throughput classes in use or to be used.
virtualCircuitId ATTRIBUTE (G)
The name of this instance of virtualCircuit MO or subclass
windowSizes ATTRIBUTE (G)
The actual window sizes in use for this VC
x25SegmentsReceived ATTRIBUTE* (G)
Value for count of X.25 Segments Received.
x25SegmentsSent ATTRIBUTE* (G)
Value for count of X.25 Segments Sent.
END MANAGED OBJECT CLASS permanentVirtualCircuit-DCE

MANAGED OBJECT CLASS virtualCallIVMO DERIVED FROM (DMI:top) CONTAINED IN (x25PLE)
DMI:objectCreation NOTIFICATION
DMI:objectDeletion NOTIFICATION
fastSelect ATTRIBUTE (G, R, RWD)
Type of fast select used or to be used for call.
packetSizes ATTRIBUTE (G, R, RWD)
The packet sizes for this VC.
reverseCharging ATTRIBUTE (G, R, RWD)
Use of reverse charging.
throughputClasses ATTRIBUTE (G, R, RWD)
The throughput classes in use or to be used.
virtualCallIVMOId ATTRIBUTE (G)
The name of this instance of virtualCallIVMO
windowSizes ATTRIBUTE (G, R, RWD)
The actual window sizes in use for this VC
END MANAGED OBJECT CLASS virtualCallIVMO

MANAGED OBJECT CLASS virtualCall-DTE DERIVED FROM (virtualCircuit-DTE) CONTAINED IN (x25PLE-DTE)
DMI:objectCreation NOTIFICATION
DMI:objectDeletion NOTIFICATION
DMI:octetsReceivedCounter ATTRIBUTE* (G)
DMI:octetsSentCounter ATTRIBUTE* (G)
GMI:communicationsInformation NOTIFICATION
GMI:deactivate ACTION
calledAddressExtension ATTRIBUTE (G)
The contents of the called address extension field.
callingAddressExtension ATTRIBUTE (G)
The contents of the calling address extension field.
dataPacketsReceived ATTRIBUTE* (G)
Counter of the total number of data packets received
dataPacketsSent ATTRIBUTE* (G)
Counter of the total number of data packets sent
dataRetransmissionTimerExpiries ATTRIBUTE* (G)
Counter of the number of expiries of timer T25.
direction ATTRIBUTE (G)
The direction (incoming or outgoing) of the call
fastSelect ATTRIBUTE (G)
Type of fast select used or to be used for call.
interruptPacketsReceived ATTRIBUTE* (G)
Counter of the number of interrupt packets received
interruptPacketsSent ATTRIBUTE* (G)
Counter of the number of interrupt packets sent

Copyright International Organization for Standardization
Provided by IHS under license with ISO
No reproduction or networking permitted without license from IHS
Not for Resale

interruptTimerExpiries ATTRIBUTE* (G)
Counter of the number of expiries of timer T26
logicalChannel ATTRIBUTE (G)
The actual Logical Channel ID used for the call
originallyCalledAddress ATTRIBUTE (G)
The originally called address
packetSizes ATTRIBUTE (G)
The packet sizes for this VC.
providerInitiatedResets ATTRIBUTE* (G)
Counter associated with the providerInitiatedReset event
redirectReason ATTRIBUTE (G)
The reason why the call has been redirected.
remoteDTEAddress ATTRIBUTE (G)
The DTE Address of the remote DTE.
remotelyInitiatedResets ATTRIBUTE* (G)
Counter associated with the remotelyInitiatedReset event
resetTimeouts ATTRIBUTE* (G)
Counter of the number of timer T22 expiries experienced
reverseCharging ATTRIBUTE (G)
Use of reverse charging.
throughputClasses ATTRIBUTE (G)
The throughput classes in use or to be used.
virtualCircuitId ATTRIBUTE (G)
The name of this instance of virtualCircuit MO or subclass
windowSizes ATTRIBUTE (G)
The actual window sizes in use for this VC
END MANAGED OBJECT CLASS virtualCall-DTE

MANAGED OBJECT CLASS virtualCall-DCE DERIVED FROM (virtualCircuit-DCE) CONTAINED IN (x25PLE-DCE)
DMI:objectCreation NOTIFICATION
DMI:objectDeletion NOTIFICATION
DMI:octetsReceivedCounter ATTRIBUTE* (G)
DMI:octetsSentCounter ATTRIBUTE* (G)
GMI:communicationsInformation NOTIFICATION
GMI:deactivate ACTION
bilateralCUGSelection ATTRIBUTE* (G)
Indicates the use of the bilateral closed user group selection facility
cUGSelection ATTRIBUTE (G)
Indicates the use of the closed user group selection facility
cUGWithOutgoingAccessSelection ATTRIBUTE* (G)
Indicates the use of the Closed User Group With Outgoing Access Selection facility
callRedirectionDeflectionNotification ATTRIBUTE* (G)
Indicates the use of the call redirection deflection notification facility
calledLineAddressModifiedNotification ATTRIBUTE* (G)
Indicates the use of the called line address modified notification facility
chargingDirection ATTRIBUTE (G)
Indicates the use of the charging direction facility
dataPacketsReceived ATTRIBUTE* (G)
Counter of the total number of data packets received
dataPacketsSent ATTRIBUTE* (G)
Counter of the total number of data packets sent
direction ATTRIBUTE (G)
The direction (incoming or outgoing) of the call
fastSelect ATTRIBUTE (G)
Type of fast select used or to be used for call.
interruptPacketsReceived ATTRIBUTE* (G)
Counter of the number of interrupt packets received
interruptPacketsSent ATTRIBUTE* (G)
Counter of the number of interrupt packets sent
interruptTimerExpiries ATTRIBUTE* (G)
Counter of the number of expiries of timer T26
logicalChannel ATTRIBUTE (G)
The actual Logical Channel ID used for the call
nUISelection ATTRIBUTE* (G)
Indicates the use of the network user identification selection facility
packetSizes ATTRIBUTE (G)
The packet sizes for this VC.

Copyright International Organization for Standardization
Provided by IHS under license with ISO
No reproduction or networking permitted without license from IHS
Not for Resale

providerInitiatedDisconnects ATTRIBUTE* (G)
Counter for the providerInitiatedDisconnect events
providerInitiatedResets ATTRIBUTE* (G)
Counter associated with the providerInitiatedReset event
rOASelection ATTRIBUTE* (G)
Indicates the use of the registered operating agency selection
remoteDTEAddress ATTRIBUTE (G)
The DTE Address of the remote DTE.
remotelyInitiatedResets ATTRIBUTE* (G)
Counter associated with the remotelyInitiatedReset event
remotelyInitiatedRestarts ATTRIBUTE* (G)
Counter of the number of remotely initiated restarts.
resetTimeouts ATTRIBUTE* (G)
Counter of the number of timer T22 expiries experienced
reverseCharging ATTRIBUTE* (G)
Use of reverse charging.
throughputClasses ATTRIBUTE (G)
The throughput classes in use or to be used.
transitDelaySelectionAndIndication ATTRIBUTE (G)
Indicates the use of the transit delay selection and
virtualCircuitId ATTRIBUTE (G)
The name of this instance of virtualCircuit MO or subclass
windowSizes ATTRIBUTE (G)
The actual window sizes in use for this VC
x25SegmentsReceived ATTRIBUTE* (G)
Value for count of X.25 Segments Received.
x25SegmentsSent ATTRIBUTE* (G)
Value for count of X.25 Segments Sent.
END MANAGED OBJECT CLASS virtualCall-DCE

MANAGED OBJECT CLASS dSeriesCounts DERIVED FROM (DMI:top) CONTAINED IN (virtualCall-DCE)
DMI:objectCreation NOTIFICATION
DMI:objectDeletion NOTIFICATION
dSeriesId ATTRIBUTE (G)
The name of this instance of the dSeriesCounts MO.
dSeriesResetRequestIndicationPackets ATTRIBUTE (G)
Value for count of Reset Request or Indication Packets
dSeriesSegmentsReceived ATTRIBUTE (G)
Value for count of Segments Received, in 64 octets,
dSeriesSegmentsSent ATTRIBUTE (G)
Value for count of Segments Sent, in 64 octets,
END MANAGED OBJECT CLASS dSeriesCounts

--`,,```,,,,````-`-`,,`,,`,`,,`---

Copyright International Organization for Standardization
Provided by IHS under license with ISO
No reproduction or networking permitted without license from IHS
Not for Resale

Annex C

Examples of the use of relationship attributes

(This annex forms an integral part of this Recommendation | International Standard)

This annex provides examples of the use of relationship attributes, both within the network layer and also between the network layer and its adjoining layers. These examples are not intended to be exhaustive. Relationships for other protocol combinations may be constructed in a similar manner, and a particular implementation may be capable of supporting multiple protocols simultaneously. For example, transport connections over CONS at the same time as transport connections over CLNS. Such possibilities have only been omitted for reasons of clarity.

In order to illustrate the use of cross layer relationships, it has been necessary to include diagrams which represent the Transport and Data Link Layer managed objects in the Figures C.1 to C.3. However, these are for illustrative purposes only, and the relevant layer management Recommendations | International Standards should be consulted for accurate details of these managed objects.

Note that some relationships are implied by containment, and therefore no explicit relationship attributes are required. For example, there is no relationship between a VirtualCall MO and an underlying SLP Connection MO. This relationship can be deduced from the sN-ServiceProvider attribute of the parent X.25 PLE MO. Another example is the relationship between the TSAP MO and its parent Transport Entity MO.

The examples are as follows:

- Figure C.1 – COTP over CONS over X.25.
- Figure C.2 – COTP over CLNS over X.25. Note that when operating over the CLNS, the Transport Connection underlyingConnectionNames attribute has a value of the empty set. Note also that when a linkage is operating over an ‘SNPA’ MO within the network layer, as opposed to operating directly over the datalink layer, both the sN-ServiceProvider and sN-SAP linkage relationship attributes point to the same MO within the network layer.
- Figure C.3 – COTP over CLNS over CSMA/CD.

Copyright International Organization for Standardization
Provided by IHS under license with ISO
No reproduction or networking permitted without license from IHS
Not for Resale

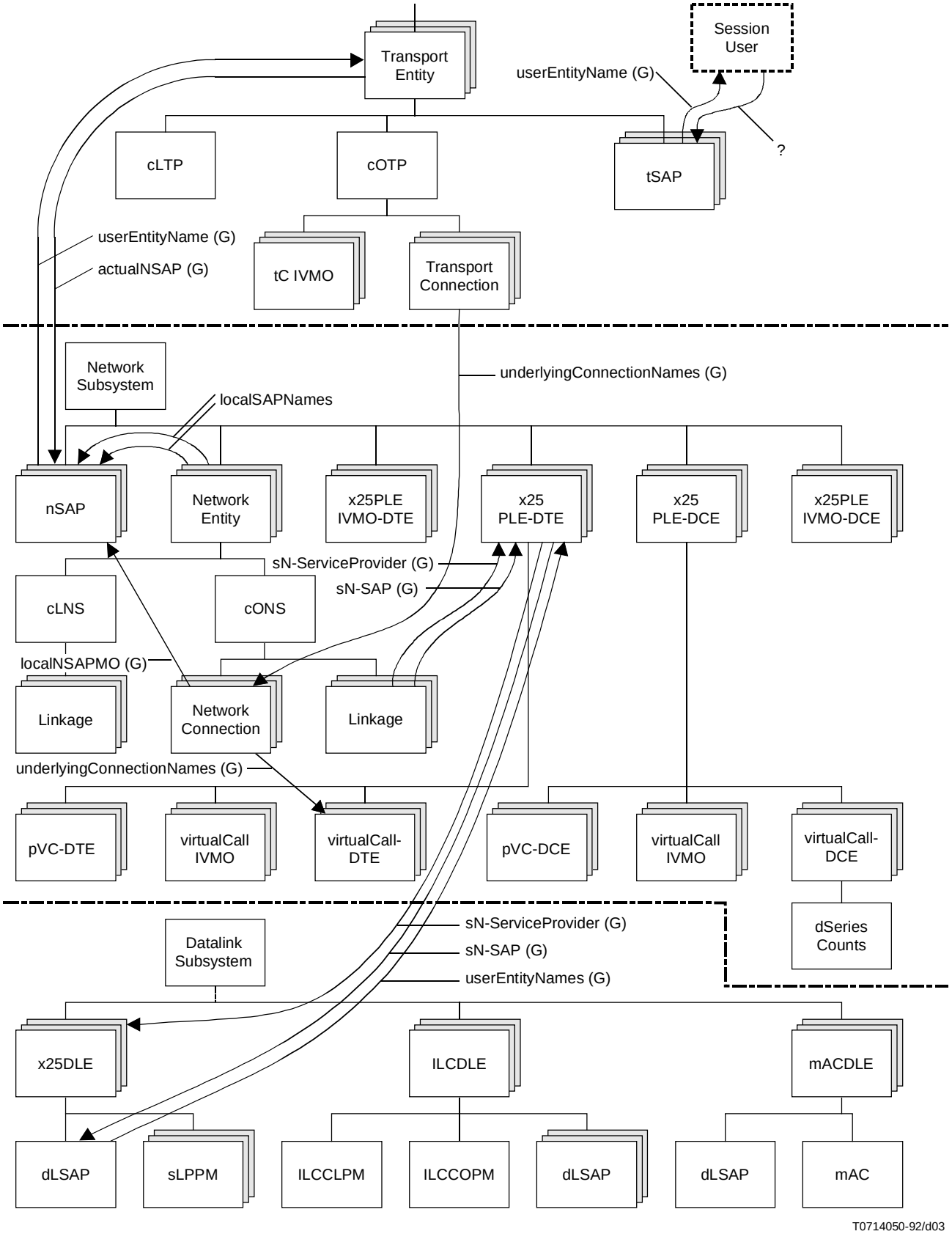

Figure C.1 – COTP over CONS over X.25

Copyright International Organization for Standardization
Provided by IHS under license with ISO
No reproduction or networking permitted without license from IHS
Not for Resale

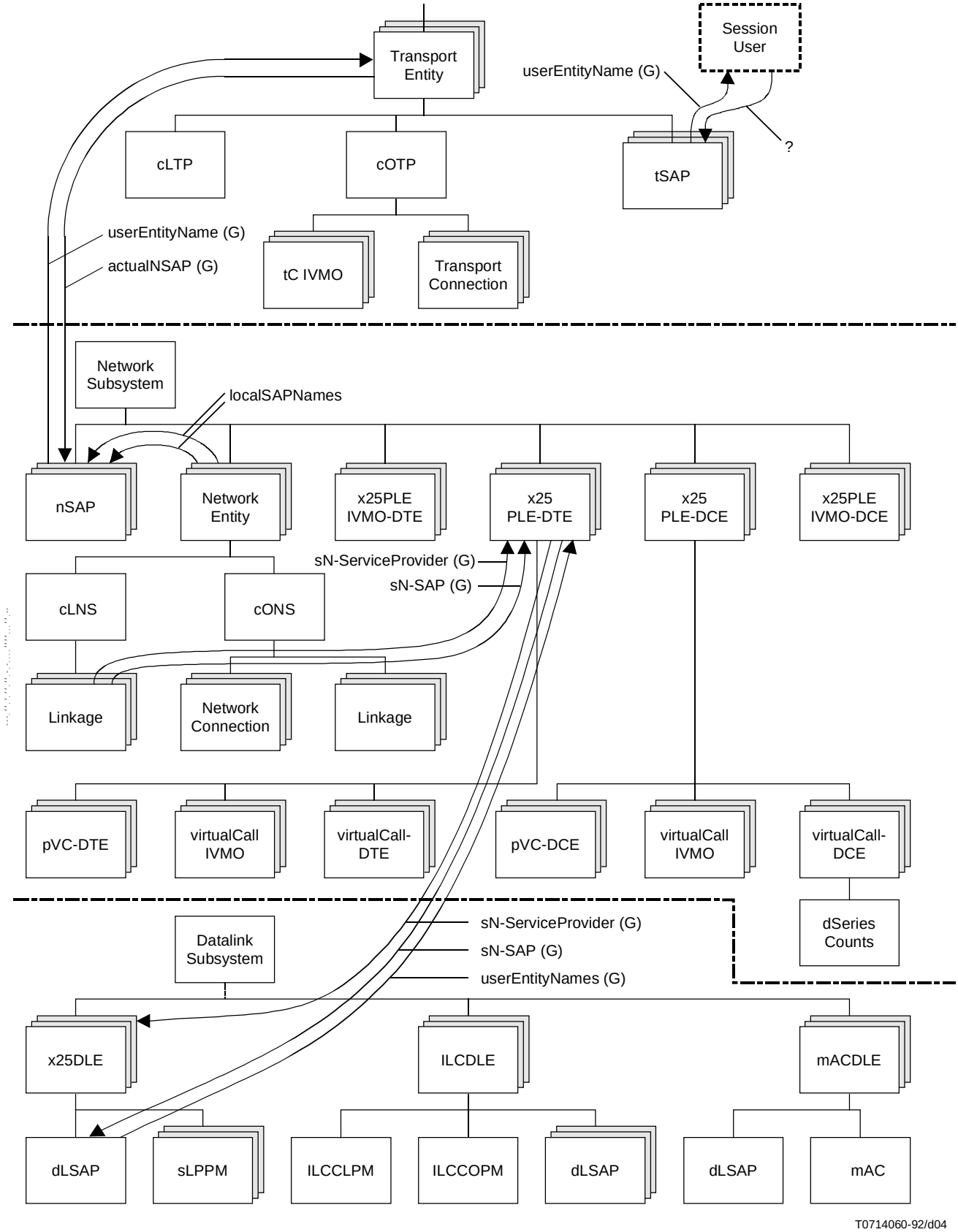

Figure C.2 – COTP over CLNS over X.25

Copyright International Organization for Standardization
Provided by IHS under license with ISO
No reproduction or networking permitted without license from IHS
Not for Resale

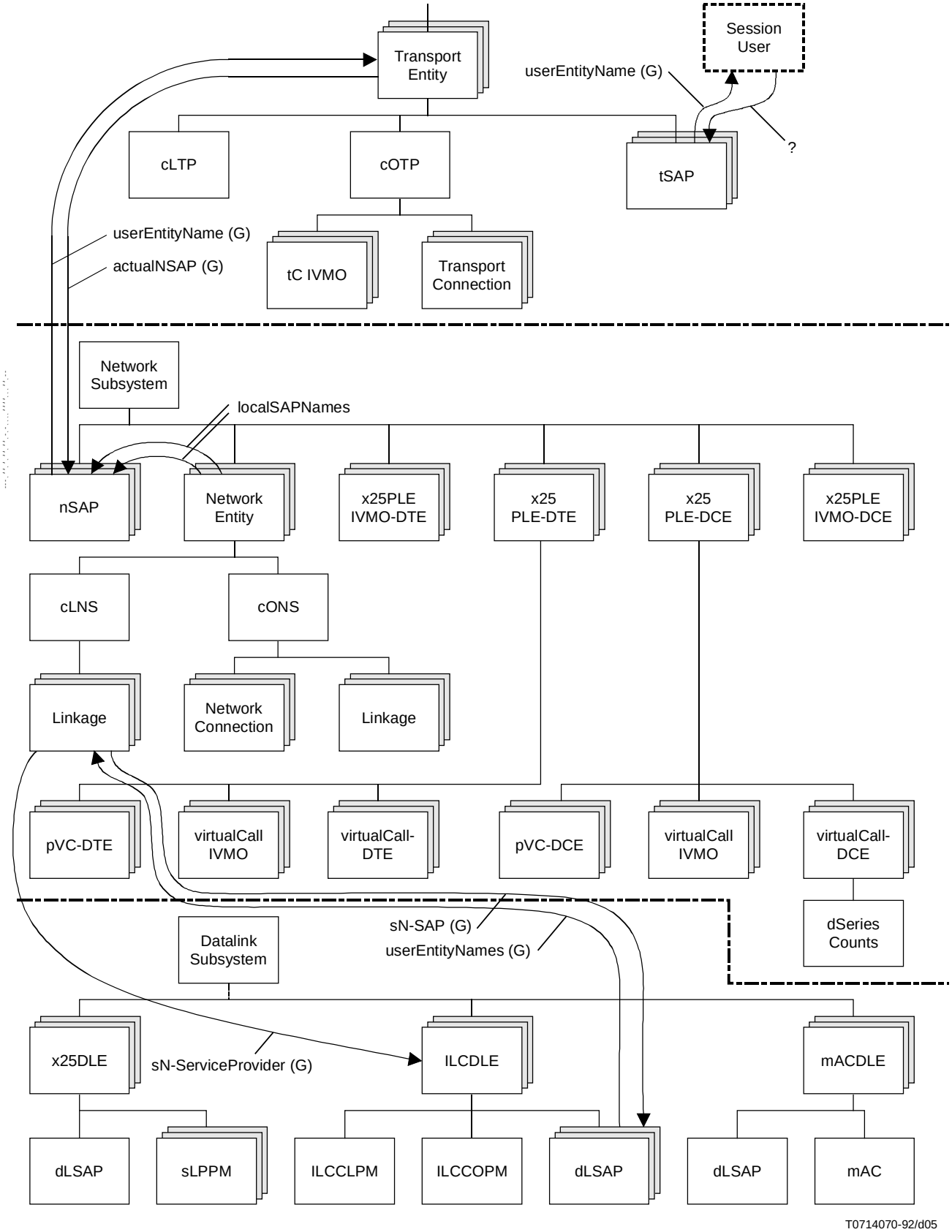

Figure C.3 – COTP over CLNS over CSMA/CD

Copyright International Organization for Standardization
Provided by IHS under license with ISO
No reproduction or networking permitted without license from IHS
Not for Resale

Annex D[1)]

MCS proforma

(This annex forms an integral part of this Recommendation | International Standard)

D.1 Introduction

D.1.1 Purpose and structure

The Management Conformance Summary (MCS) is a statement by a supplier that identifies an implementation and provides information on whether the implementation claims conformance to any of the listed set of documents that specify conformance requirements to OSI management.

The MCS proforma is a document, in the form of a questionnaire that when completed by the supplier of an implementation becomes the MCS.

D.1.2 Instructions for completing the MCS proforma to produce an MCS[2)]

The supplier of the implementation shall enter an explicit statement in each of the boxes provided. Specific instruction is provided in the text which precedes each table.

D.1.3 Symbols, abbreviations and terms

For all annexes of this Recommendation | International Standard, the following common notations, defined in ITU-T Rec. X.291 | ISO/IEC 9646-2 and ITU-T Rec. X.296 | ISO/IEC 9646-7 are used for the Status column:

- m Mandatory
- o Optional
- c Conditional
- x Prohibited
- – Not applicable or out of scope

NOTE 1 – “c”, “m”, and “o” are prefixed by a “c:” when nested under a conditional or optional item of the same table.

NOTE 2 – “o” may be suffixed by “.N” (where N is a unique number) for mutually exclusive or selectable options among a set of status values. Support of at least one of the choices (from the items with the same values of N) is required.

For all annexes of this Recommendation | International Standard, the following common notations, defined in ITU-T Rec. X.291 | ISO/IEC 9646-2 and ITU-T Rec. X.296 | ISO/IEC 9646-7 are used for the Support column:

- Y Implemented
- N Not implemented
- – No answer required
- Ig The item is ignored (i.e. processed syntactically but not semantically)

D.2 Identification of the implementation

D.2.1 Date of statement

The supplier of the implementation shall enter the date of this statement in the box below. Use the format DD-MM-YYYY.

Date of statement

---

1) **Copyright release for MCS proforma**

Users of this Recommendation | International Standard may freely reproduce the MCS proforma in this annex so that it can be used for its intended purpose, and may further publish the completed MCS.

2) Instructions for completing the MCS proforma are specified in ITU-T Rec. X.724 | ISO/IEC 10165-6.

Copyright International Organization for Standardization
Provided by IHS under license with ISO
No reproduction or networking permitted without license from IHS
Not for Resale

D.2.2 Identification of the implementation

The supplier of the implementation shall enter information necessary to uniquely identify the implementation and the system(s) in which it may reside, in the box below.

D.2.3 Contact

The supplier of the implementation shall provide information on whom to contact if there are any queries concerning the content of the MCS, in the box below.

D.3 Identification of the Recommendation | International Standard in which the management information is defined

The supplier of the implementation shall enter the title, reference number and date of the publication of the Recommendation | International Standard which specifies the management information to which conformance is claimed, in the box below.

Recommendation | International Standard to which conformance is claimed

D.3.1 Technical corrigenda implemented

The supplier of the implementation shall enter the reference numbers of implemented technical corrigenda which modify the identified Recommendation | International Standard, in the box below.

D.3.2 Amendments implemented

The supplier of the implementation shall state the titles and reference numbers of implemented amendments to the identified Recommendation | International Standard, in the box below.

Copyright International Organization for Standardization
Provided by IHS under license with ISO
No reproduction or networking permitted without license from IHS
Not for Resale

D.4 Management conformance summary

The supplier of implementation shall state the capabilities and features supported and provide summary of conformance claims to Recommendations | International Standards using the tables in this annex.

The supplier of the implementation shall specify the roles that are supported in Table D.1.

Table D.1 – Roles

Index	Roles supported	Status	Support	Additional information
1	Manager role support	o.1		
2	Agent role support	o.1		

The supplier of the implementation shall specify the protocols that are supported in Table D.2.

Table D.2 – Protocol

Index	Protocol supported	Status	Support	Additional information
1	CONS support	o.2		
2	CLNS support	o.2		
3	X.25-DTE support	o.2		
4	X.25-DCE support	o.2		

The supplier of the implementation shall specify support for management information in the manager role, in Table D.3.

Table D.3 – Manager role minimum conformance requirement

Index	Item	Status	Support	Additional information
1	Operations on managed objects	c1		
2	Activate action for Connectionless-mode network service managed object	c2		
3	Deactivate action for Connectionless-mode network service managed object	c2		
4	Communications Alarm notification for Connectionless-mode network service managed object	c2		
5	Communications information notification for Connectionless-mode network service managed object	c2		
6	Object creation notification for Connectionless-mode network service managed object	c2		
7	Object deletion notification for Connectionless-mode network service managed object	c2		
8	State change notification for Connectionless-mode network service managed object	c2		
9	Activate action for Connection-mode network service managed object	c3		
10	Deactivate action for Connection-mode network service managed object	c3		
11	Deactivate when no users action for Connection-mode network service managed object	c3		
12	Object creation notification for Connection-mode network service managed object	c3		
13	Object deletion notification for Connection-mode network service managed object	c3		
14	State change notification for Connection-mode network service managed object	c3		
15	Object creation notification for D-Series counts managed object	c1		
16	Object deletion notification for D-Series counts managed object	c1		
17	Activate action for Linkage managed object	c4		
18	Deactivate action for Linkage managed object	c4		
19	Communications Alarm notification for Linkage managed object	c4		
20	Communications information notification for Linkage managed object	c4		

--`,,```,,,,````-`-`,,`,,`,`,,`---

Copyright International Organization for Standardization
Provided by IHS under license with ISO
No reproduction or networking permitted without license from IHS
Not for Resale

Table D.3 *(continued)*

Index	Item	Status	Support	Additional information
21	Object creation notification for Linkage managed object	c4		
22	Object deletion notification for Linkage managed object	c4		
23	State change notification for Linkage managed object	c4		
24	Object creation notification for NSAP managed object	c4		
25	Object deletion notification for NSAP managed object	c4		
26	Deactivate action for Network connection managed object	c4		
27	Communications information notification for Network connection managed object	c3		
28	Object creation notification for Network connection managed object	c3		
29	Object deletion notification for Network connection managed object	c3		
30	Object creation notification for Network entity managed object	c3		
31	Object deletion notification for Network entity managed object	c3		
32	Object creation notification for Permanent virtual circuit-DCE managed object	c5		
33	Object deletion notification for Permanent virtual circuit-DCE managed object	c5		
34	State change notification for Permanent virtual circuit-DCE managed object	c5		
35	Object creation notification for Permanent virtual circuit-DTE managed object	c6		
36	Object deletion notification for Permanent virtual circuit-DTE managed object	c6		
37	Communications information notification for Virtual call-DCE managed object	c6		
38	Object creation notification for Virtual call-DCE managed object	c5		
39	Object deletion notification for Virtual call-DCE managed object	c5		
40	Deactivate action for Virtual call-DTE managed object	c6		
41	Communications information notification for Virtual call-DTE managed object	c6		
42	Object creation notification for Virtual call-DTE managed object	c6		
43	Object deletion notification for Virtual call-DTE managed object	c6		
44	Object creation notification for Virtual call IV managed object	c7		
45	Object deletion notification for Virtual call IV managed object	c7		
46	Activate action for X25PLE-DCE managed object	c5		
47	Deactivate action for X25PLE-DCE managed object	c5		
48	Object creation notification for X25PLE-DCE managed object	c5		
49	Object deletion notification for X25PLE-DCE managed object	c5		
50	State change notification for X25PLE-DCE managed object	c5		
51	Activate action for X25PLE-DTE managed object	c6		
52	Deactivate action for X25PLE-DTE managed object	c6		
53	Communications Alarm notification for X25PLE-DTE managed object	c6		
54	Object creation notification for X25PLE-DTE managed object	c6		
55	Object deletion notification for X25PLE-DTE managed object	c6		
56	State change notification for X25PLE-DTE managed object	c6		
57	Object creation notification for X25PLEIVMO-DCE managed object	c5		
58	Object deletion notification for X25PLEIVMO-DCE managed object	c5		
59	Object creation notification for X25PLEIVMO-DTE managed object	c6		
60	Object deletion notification for X25PLEIVMO-DTE managed object	c6		

Copyright International Organization for Standardization
Provided by IHS under license with ISO
No reproduction or networking permitted without license from IHS
Not for Resale

Table D.3 *(concluded)*

Index	Item	Status	Support	Additional information
c1: if D.1/1a then o.3 else –				
c2: if D.1/1a and D.2/2a then o.3 else –				
c3: if D.1/1a and D.2/1a then o.3 else –				
c4: if D.1/1a and (D.2/1a or D.2/2a) then o.3 else –				
c5: if D.1/1a and D.2/4a then o.3 else –				
c6: if D.1/1a and D.2/3a then o.3 else –				
c7: if D.1/1a and (D.2/3a or D.2/4a) then o.3 else –				

The supplier of the implementation shall specify support for management information in the agent role, in Table D.4.

Table D.4 – Agent role minimum conformance requirement

Index	Item	Status	Support	Additional information
1	Network subsystem managed object	m		
2	Network entity managed object	c8		
3	NSAP managed object	c8		
4	Connectionless-mode network service managed object	c9		
5	Linkage managed object	c8		
6	Connection-mode network service managed object	c10		
7	Network connection managed object	c10		
8	X.25 PLE DTE managed object	c11		
9	X.25 PLE DCE managed object	c12		
10	X.25 PLE DTE initial values managed object	o		
11	X.25 PLE DCE initial values managed object	o		
12	Permanent virtual circuit-DTE managed object	c13		
13	Permanent virtual circuit-DCE managed object	c14		
14	Virtual call initial values managed object	o		
15	Virtual call-DTE managed object	c13		
16	Virtual call-DCE managed object	c14		
17	Recommendation D-Series counts managed object	o		
c8: if D.1/2a and (D.2/1a or D.2/2a) then m else –				
c9: if D.1/2a and D.2/1a then m else –				
c10: if D.1/2a and D.2/2a then m else –				
c11: if D.1/2a and D.2/3a then m else –				
c12: if D.1/2a and D.2/4a then m else –				
c13: if D.1/2a and D.2/3a then o.4 else –				
c14: if D.1/2a and D.2/4a then o.5 else –				

Table D.5 – Logging of event records

Index		Status	Support	Additional information
1	Does the implementation support logging of event records in agent role?	c15		
c15: if D.1/2a then o else –				

NOTE – Conformance to this Recommendation | International Standard does not require conformance to CCITT Rec. X.735 | ISO/IEC 10164-6.

The supplier of the implementation shall provide information on claims of conformance to any of the Recommendations | International Standards summarized in Tables D.6, D.7 and D.8. For each Recommendation | International Standard that the supplier of the implementation claims conformance to, the corresponding conformance statement(s) shall be completed, or referenced by, the MCS. The supplier of the implementation shall complete the Support, Table numbers and Additional information columns.

In Tables D.6, D.7 and D.8, the Status column is used to indicate whether the supplier of the implementation is required to complete the referenced tables or referenced items. Conformance requirements are as specified in the referenced tables or referenced items and are not changed by the value of the MCS Status column. Similarly, the Support column is used by the supplier of the implementation to indicate completion of the referenced tables or referenced items.

Copyright International Organization for Standardization
Provided by IHS under license with ISO
No reproduction or networking permitted without license from IHS
Not for Resale

Table D.6 – MOCS support summary

Index	Identification of the document that includes the MOCS proforma	Table numbers of MOCS proforma	Description	Con-straints and values	Status	Support	Table numbers of MOCS	Addi-tional infor-mation
1	"ITU-T Rec. X.283 | ISO/IEC 10733"	Table F.1-F.8	cLNS	–	c16			
2	"ITU-T Rec. X.283 | ISO/IEC 10733"	Table F.9-F.15	cONS	–	c17			
3	"ITU-T Rec. X.283 | ISO/IEC 10733"	Table F.16-F.21	dSeriesCounts	–	c18			
4	"ITU-T Rec. X.283 | ISO/IEC 10733"	Table F.22-F.29	linkage	–	c19			
5	"ITU-T Rec. X.283 | ISO/IEC 10733"	Table F.30-F.34	nSAP	–	c20			
6	"ITU-T Rec. X.283 | ISO/IEC 10733"	Table F.35-F.40	networkConnection	–	c21			
7	"ITU-T Rec. X.283 | ISO/IEC 10733"	Table F.41-F.45	networkEntity	–	c22			
8	"ITU-T Rec. X.283 | ISO/IEC 10733"	Table F.46-F.49	networkSubsystem	–	m			
9	"ITU-T Rec. X.283 | ISO/IEC 10733"	Table F.50-F.55	permanentVirtualCircuit-DCE	–	c23			
10	"ITU-T Rec. X.283 | ISO/IEC 10733"	Table F.56-F.61	permanentVirtualCircuit-DTE	–	c24			
11	"ITU-T Rec. X.283 | ISO/IEC 10733"	Table F.62-F.68	virtualCall-DCE	–	c25			
12	"ITU-T Rec. X.283 | ISO/IEC 10733"	Table F.69-F.75	virtualCall-DTE	–	c26			
13	"ITU-T Rec. X.283 | ISO/IEC 10733"	Table F.76-F.80	virtualCallIVMO	–	c27			
14	"ITU-T Rec. X.283 | ISO/IEC 10733"	Table F.81-F.87	x25PLE-DCE	–	c28			
15	"ITU-T Rec. X.283 | ISO/IEC 10733"	Table F.88-F.95	x25PLE-DTE	–	c29			
16	"ITU-T Rec. X.283 | ISO/IEC 10733"	Table F.96-F.100	x25PLEIVMO-DCE	–	c30			
17	"ITU-T Rec. X.283 | ISO/IEC 10733"	Table F.101-F.105	x25PLEIVMO-DTE	–	c31			
18	"ITU-T Rec. X.284 | ISO/IEC 10737"	Table F.44-F.47	communicationInformationRecord	–	c32			
19	"CCITT Rec. X.730 (1992) | ISO/IEC 10164-1:1993"	Table C.1-C.4	objectCreationRecord	–	c33			
20	"CCITT Rec. X.730 (1992) | ISO/IEC 10164-1:1993"	Table C.5-C.8	objectDeletionRecord	–	c33			
21	"CCITT Rec. X.731 (1992) | ISO/IEC 10164-2:1992"	Table C.1-C.4	stateChangeRecord	–	c34			
22	"CCITT Rec. X.733 (1992) | ISO/IEC 10164-4:1992"	Table C.1-C.4	alarmRecord	–	c35			

c16: if D.4/4a then m else –
c17: if D.4/6a then m else –
c18: if D.4/17a then m else –
c19: if D.4/5a then m else –
c20: if D.4/3a then m else –
c21: if D.4/7a then m else –
c22: if D.4/2a then m else –
c23: if D.4/13a then m else –
c24: if D.4/12a then m else –
c25: if D.4/16a then m else –
c26: if D.4/15a then m else –
c27: if D.4/14a then m else –
c28: if D.4/9a then m else –
c29: if D.4/8a then m else –
c30: if D.4/11a then m else –
c31: if D.4/10a then m else –
c32: if D.5/1a and (D.4/4a or D.4/5a or D.4/7a or D.4/15a or D.4/16a) then m else –
c33: if D.5/1a then m else –
c34: if D.5/1a and (D.4/4a or D.4/5a or D.4/6a or D.4/8a or D.4/9a or D.4/13a) then m else –
c35: if D.5/1a and (D.4/4a or D.4/5a or D.4/8a) then m else –

Copyright International Organization for Standardization
Provided by IHS under license with ISO
No reproduction or networking permitted without license from IHS
Not for Resale

Table D.7 – MRCS support summary

Index	Identification of the document that includes the MOCS proforma	Table numbers of MOCS proforma	Description	Con-straints and values	Status	Support	Table numbers of MRCS	Addi-tional infor-mation
1	"ITU-T Rec. X.283 | ISO/IEC 10733"	Table G.1/1	cLNS-networkEntity-Automatic	–	c36			
2	"ITU-T Rec. X.283 | ISO/IEC 10733"	Table G.1/2	cLNS-networkEntity-Management	–	c36			
3	"ITU-T Rec. X.283 | ISO/IEC 10733"	Table G.1/3	"ITU-T Rec. X.723 (1993) | ISO/IEC 10165-5:1994": clProtocolMachine-entity	–	c36			
4	"ITU-T Rec. X.283 | ISO/IEC 10733"	Table G.1/4	cONS-networkEntity-Automatic	–	c37			
5	"ITU-T Rec. X.283 | ISO/IEC 10733"	Table G.1/5	cONS-networkEntity-Management	–	c37			
6	"ITU-T Rec. X.283 | ISO/IEC 10733"	Table G.1/6	"ITU-T Rec. X.723 (1993) | ISO/IEC 10165-5:1994": coProtocolMachine-entity	–	c37			
7	"ITU-T Rec. X.283 | ISO/IEC 10733"	Table G.1/7	dSeriesCounts-virtual Call-DCE-Automatic	–	c38			
8	"ITU-T Rec. X.283 | ISO/IEC 10733"	Table G.1/8	dSeriesCounts-virtual Call-DCE-Management	–	c38			
9	"ITU-T Rec. X.283 | ISO/IEC 10733"	Table G.1/9	linkage-cLNS-Automatic	–	c39			
10	"ITU-T Rec. X.283 | ISO/IEC 10733"	Table G.1/10	linkage-cLNS-Management	–	c39			
11	"ITU-T Rec. X.283 | ISO/IEC 10733"	Table G.1/11	linkage- cONS-Automatic	–	c40			
12	"ITU-T Rec. X.283 | ISO/IEC 10733"	Table G.1/12	linkage-cONS-Management	–	c40			
13	"ITU-T Rec. X.283 | ISO/IEC 10733"	Table G.1/13	nSAP-network Subsystem-Automatic	–	c41			
14	"ITU-T Rec. X.283 | ISO/IEC 10733"	Table G.1/14	nSAP-network Subsystem-Management	–	c41			
15	"ITU-T Rec. X.283 | ISO/IEC 10733"	Table G.1/15	"ITU-T Rec. X.723 (1993) | ISO/IEC 10165-5:1994": sap2-subsystem	–	c41			
16	"ITU-T Rec. X.283 | ISO/IEC 10733"	Table G.1/16	networkConnection-cONS	–	c42			
17	"ITU-T Rec. X.283 | ISO/IEC 10733"	Table G.1/17	"ITU-T Rec. X.723 (1993) | ISO/IEC 10165-5:1994": singlePeerConnection-co Protocol Machine	–	c42			
18	"ITU-T Rec. X.283 | ISO/IEC 10733"	Table G.1/18	networkEntity-network Subsystem-Automatic	–	c43			
19	"ITU-T Rec. X.283 | ISO/IEC 10733"	Table G.1/19	networkEntity-network Subsystem-Management	–	c43			
20	"ITU-T Rec. X.283 | ISO/IEC 10733"	Table G.1/20	"ITU-T Rec. X.723 (1993) | ISO/IEC 10165-5:1994": communicationsEntity-subsystem	–	c43			
21	"ITU-T Rec. X.283 | ISO/IEC 10733"	Table G.1/21	networkSubsystem-system	–	o.14			
22	"ITU-T Rec. X.283 | ISO/IEC 10733"	Table G.1/22	"ITU-T Rec. X.723 (1993) | ISO/IEC 10165-5:1994": subsystem-system	–	o.14			
23	"ITU-T Rec. X.283 | ISO/IEC 10733"	Table G.1/23	permanentVirtual Circuit-DCE-x25PLE-DCE	–	c44			
24	"ITU-T Rec. X.283 | ISO/IEC 10733"	Table G.1/24	permanentVirtual Circuit-DTE-x25PLE-DTE	–	c45			
25	"ITU-T Rec. X.283 | ISO/IEC 10733"	Table G.1/25	virtualCall-DCE-x25PLE-DCE-Automatic	–	c46			
26	"ITU-T Rec. X.283 | ISO/IEC 10733"	Table G.1/26	virtualCall-DCE-x25PLE-DCE-Management	–	c46			
27	"ITU-T Rec. X.283 | ISO/IEC 10733"	Table G.1/27	virtualCall-DTE-x25PLE-DTE	–	c47			
28	"ITU-T Rec. X.283 | ISO/IEC 10733"	Table G.1/28	virtualCallIVMO-x25PLE	–	c47			

Copyright International Organization for Standardization
Provided by IHS under license with ISO
No reproduction or networking permitted without license from IHS
Not for Resale

Table D.7 *(concluded)*

Index	Identification of the document that includes the MOCS proforma	Table numbers of MOCS proforma	Description	Con-straints and values	Status	Support	Table numbers of MRCS	Addi-tional infor-mation
29	"ITU-T Rec. X.283 | ISO/IEC 10733"	Table G.1/29	x25PLE-networkSubsystem-Automatic	–	c48			
30	"ITU-T Rec. X.283 | ISO/IEC 10733"	Table G.1/30	x25PLE-networkSubsystem-Management	–	c48			
31	"ITU-T Rec. X.283 | ISO/IEC 10733"	Table G.1/31	x25PLEIVMO-networkSubsystem	–	c49			
32	"CCITT Rec. X.735 (1992) | ISO/IEC 10164-6"	Table D.1/1	logRecord-log	–	c50			

c36: if D.4/4a then o.6 else –
c37: if D.4/6a then o.7 else –
c38: if D.4/17a then o.8 else –
c39: if D.4/4a and D.4/5a then o.9 else –
c40: if D.4/5a and D.4/6a then o.10 else –
c41: if D.4/3a then o.11 else –
c42: if D.4/7a then o.12 else –
c43: if D.4/2a then o.13 else –
c44: if D.4/13a then o.15 else –
c45: if D.4/12a then o.16 else –
c46: if D.4/16a then o.17 else –
c47: if D.4/15a then o.18 else –
c48: if D.4/8a or D.4/9a then o.19 else –
c49: if D.4/10a or D.4/11a then m else –
c50: if D.5/1a then o else –

Table D.8 – MICS support summary

Index	Identification of the document that includes the MOCS proforma	Table numbers of MOCS proforma	Description	Con-straints and values	Status	Support	Table numbers of MICS	Addi-tional infor-mation
1	"ITU-T Rec. X.283 | ISO/IEC 10733"	Table E.1 – E.42	management operations	–	c51			
2	"ITU-T Rec. X.283 | ISO/IEC 10733"	Table E.43	notifications	–	c52			
3	"ITU-T Rec. X.283 | ISO/IEC 10733"	Table E.44	actions	–	c53			

c51: if D.3/1a then m else –

c52: if D.3/4a or D.3/5a or D.3/6a or D.3/7a or D.3/8a or D.3/12a or D.3/13a or D.3/14a or D.3/15a or D.3/16a or D.3/19a D.3/20a or D.3/21a or D.3/22a or D.3/23a or D.3/24a or D.3/25a or D.3/27a or D.3/28a or D.3/29a or D.3/30a or D.3/31a or D.3/32a or D.3/33a or D.3/34a or D.3/35a or D.3/36a or D.3/37a or D.3/38a or D.3/39a or D.3/41a or D.3/42a or D.3/43a or D.3/44a or D.3/45a or D.3/48a or D.3/49a or D.3/50a or D.3/53a or D.3/54a or D.3/55a or D.3/56a or D.3/57a or D.3/58a or D.3/59a D.3/60a then m else –

c53: if D.3/2a or D.3/3a or D.3/9a or D.3/10a or D.3/11a or D.3/17a or D.3/18a or D.3/26a or D.3/40a D.3/46a or D.3/47a or D.3/51a or D.3/52a then m else –

--`,,```,,,,````-`-`,,`,,`,`,,`---

Copyright International Organization for Standardization
Provided by IHS under license with ISO
No reproduction or networking permitted without license from IHS
Not for Resale

Annex E[3)]

MICS proforma

(This annex forms an integral part of this Recommendation | International Standard)

E.1 Introduction

The purpose of this MICS proforma is to provide a mechanism for a supplier of an implementation which claims conformance, in the manager role, to management information specified in this Recommendation | International Standard, to provide conformance information in a standard form.

E.2 Instructions for completing the MICS proforma to produce a MICS[4)]

The MICS proforma contained in this annex is comprised of information in tabular form, in accordance with ITU-T Rec. X.724 | ISO/IEC 10165-6. In addition to the general guidance given in ITU-T Rec. X.724 | ISO/IEC 10165-6, the Additional information column shall be used to identify the object classes for which the management operations are supported. The supplier of the implementation shall state which items are supported in the tables below and if necessary, provide additional information.

E.3 Symbols, abbreviations and terms

The MICS proforma contained in this annex is comprised of information in tabular form, in accordance with ITU-T Rec. X.291 | ISO/IEC 9646-2.

The notations used in the Status and Support columns are specified in D.1.3.

E.4 Statement of conformance to the management information

E.4.1 Attributes

The specifier of a manager role implementation that claims to support management operations on the attributes specified in this Recommendation | International Standard shall import a copy of Tables E.1 through E.17 and complete them.

E.4.1.1 The CLNS managed object

See Table E.1.

---

3) **Copyright release for MICS proforma**

Users of this Recommendation | International Standard may freely reproduce the MICS proforma in this annex so that it can be used for its intended purpose, and may further publish the completed MICS.

4) Instructions for completing the MICS proforma are specified in ITU-T Rec. X.724 | ISO/IEC 10165-6.

Copyright International Organization for Standardization
Provided by IHS under license with ISO
No reproduction or networking permitted without license from IHS
Not for Resale

Copyright International Organization for Standardization
Provided by IHS under license with ISO
No reproduction or networking permitted without license from IHS
Not for Resale

Table E.1 – cLNS Attribute support

				Set by create		Get		Replace		Add		Remove		Set to default		
Index	Attribute template label	Value of object identifier for attribute	Constraints and values	Status	Support	Status	Support	Status	Support	Status	Support	Status	Support	Status	Support	Additional information
1	"CCITT Rec. X.721 (1992) | ISO/IEC 10165-2:1992": administrativeState	{2 9 3 2 7 31}	ENUMERATED	c1		o.1		o.1		–		–		–		
2	"CCITT Rec. X.721 (1992) | ISO/IEC 10165-2:1992": allomorphs	{2 9 3 2 7 50}	SET OF ObjectClass	c1		o.1		–		–		–		–		
3	"ISO/IEC 10589:1992": areaAddresses	{2 13 0 1 7 18}	SET OF OCTET STRING	–		o.1		–		–		–		–		
4	"ISO/IEC 10589:1992": areaReceivePasswords	{2 13 0 1 7 112}	SET OF OCTET STRING	c1		o.1		o.1		o.1		o.1		o.1		
5	"ISO/IEC 10589:1992": areaTransmitPassword	{2 13 0 1 7 111}	OCTET STRING	c1		o.1		o.1		–		–		o.1		
6	assemblingSegmentsDiscarded	{2 13 0 2 7 8}	INTEGER	–		o.1		–		–		–		–		
7	"ISO/IEC 10589:1992": attemptsToExceedMaximumSequenceNumber	{2 13 0 1 7 22}	INTEGER	–		o.1		–		–		–		–		
8	"ISO/IEC 10589:1992": authenticationFailures	{2 13 0 1 7 117}	INTEGER	–		o.1		–		–		–		–		
9	"ITU-T Rec. X.723 (1993) | ISO/IEC 10165-5:1994": clProtocolMachineId	{2 9 3 5 7 2}	GraphicString	c1		o.1		–		–		–		–		
10	"ISO/IEC 10589:1992": completeSNPInterval	{2 13 0 1 7 8}	INTEGER	c1		o.1		o.1		–		–		–		
11	congestionDiscards	{2 13 0 2 7 11}	INTEGER	–		o.1		–		–		–		–		
12	"ISO/IEC 10589:1992": corruptedLSPsDetected	{2 13 0 1 7 19}	INTEGER	–		o.1		–		–		–		–		
13	"ISO/IEC 10589:1992": dRISISHelloTimer	{2 13 0 1 7 16}	INTEGER	c1		o.1		o.1		–		–		–		
14	"ISO/IEC 10589:1992": domainReceivePasswords	{2 13 0 1 7 114}	SET OF OCTET STRING	c1		o.1		o.1		o.1		o.1		o.1		
15	"ISO/IEC 10589:1992": domainTransmitPassword	{2 13 0 1 7 113}	OCTET STRING	c1		o.1		o.1		–		–		o.1		

--`,,```,,,,````-`-`,,`,,`,`,,`---

Copyright International Organization for Standardization
Provided by IHS under license with ISO
No reproduction or networking permitted without license from IHS
Not for Resale

Table E.1 *(continued)*

				Set by create		Get		Replace		Add		Remove		Set to default		
Index	Attribute template label	Value of object identifier for attribute	Constraints and values	Status	Support	Status	Support	Status	Support	Status	Support	Status	Support	Status	Support	Additional information
16	enableChecksum	{2 13 0 2 7 4}	BOOLEAN	c1		o.1		o.1		–		–		o.1		
17	errorReportsReceived	{2 13 0 2 7 9}	INTEGER	–		o.1		–		–		–		–		
18	“ISO/IEC 10589:1992”: iDFieldLengthMismatches	{2 13 0 1 7 25}	INTEGER	–		o.1		–		–		–		–		
19	“ISO/IEC 10589:1992”: iSType	{2 13 0 1 7 2}	ENUMERATED	c1		o.1		–		–		–		–		
20	“ISO/IEC 10589:1992”: l1State	{2 13 0 1 7 17}	ENUMERATED	–		o.1		–		–		–		–		
21	“ISO/IEC 10589:1992”: l2State	{2 13 0 1 7 28}	ENUMERATED	–		o.1		–		–		–		–		
22	“ISO/IEC 10589:1992”: ISPL1DatabaseOverloads	{2 13 0 1 7 20}	INTEGER	–		o.1		–		–		–		–		
23	“ISO/IEC 10589:1992”: lSPL2DatabaseOverloads	{2 13 0 1 7 32}	INTEGER	–		o.1		–		–		–		–		
24	“ISO/IEC 10589:1992”: manualAddressesDroppedFromArea	{2 13 0 1 7 21}	INTEGER	–		o.1		–		–		–		–		
25	“ISO/IEC 10589:1992”: manualareaAddresses	{2 13 0 1 7 10}	SET OF OCTET STRING	–		o.1		–		–		–		–		
26	“ISO/IEC 10589:1992”: maximumAreaAddresses	{2 13 0 1 7 4}	INTEGER “ISO/IEC 10589:1992”: constraintViolation	c1		o.1		o.1		–		–		–		
27	“ISO/IEC 10589:1992”: maximumAreaAddressesMismatches	{2 13 0 1 7 118}	INTEGER	–		o.1		–		–		–		–		
28	“ISO/IEC 10589:1992”: maximumLSPGenerationInterval	{2 13 0 1 7 6}	INTEGER	c1		o.1		o.1		–		–		–		
29	maximumLifetime	{2 13 0 2 7 102}	INTEGER	c1		o.1		o.1		–		–		–		
30	“ISO/IEC 10589:1992”: maximumPathSplits	{2 13 0 1 7 3}	INTEGER “ISO/IEC 10589:1992”: constraintViolation	c1		o.1		o.1		–		–		–		

Copyright International Organization for Standardization
Provided by IHS under license with ISO
No reproduction or networking permitted without license from IHS
Not for Resale

Table E.1 *(continued)*

				Set by create		Get		Replace		Add		Remove		Set to default		
Index	Attribute template label	Value of object identifier for attribute	Constraints and values	Status	Support	Status	Support	Status	Support	Status	Support	Status	Support	Status	Support	Additional information
31	"ISO/IEC 10589:1992": maximumVirtualAdjacencies	{2 13 0 1 7 27}	INTEGER "ISO/IEC 10589:1992": constraintViolation	c1		o.1		o.1		–		–		o.1		
32	"ISO/IEC 10589:1992": minimumBroadcastLSPTransmissionInterval	{2 13 0 1 7 7}	INTEGER	c1		o.1		o.1		–		–		–		
33	"ISO/IEC 10589:1992": minimumLSPGenerationInterval	{2 13 0 1 7 11}	INTEGER	c1		o.1		o.1		–		–		–		
34	"ISO/IEC 10589:1992": minimumLSPTransmissionInterval	{2 13 0 1 7 5}	INTEGER	c1		o.1		o.1		–		–		–		
35	CCITT Rec. X.721 (1992) | ISO/IEC 10165-2:1992": nameBinding	{2 9 3 2 7 63}	OBJECT IDENTIFIER	c1		o.1		–		–		–		–		
36	CCITT Rec. X.721 (1992) | ISO/IEC 10165-2:1992": objectClass	{2 9 3 2 7 65}	ObjectClass	c1		o.1		–		–		–		–		
37	CCITT Rec. X.721 (1992) | ISO/IEC 10165-2:1992": octetsReceivedCounter	{2 9 3 2 7 78}	INTEGER	–		o.1		–		–		–		–		
38	CCITT Rec. X.721 (1992) | ISO/IEC 10165-2:1992": octetsSentCounter	{2 9 3 2 7 80}	INTEGER	–		o.1		–		–		–		–		
39	CCITT Rec. X.721 (1992) | ISO/IEC 10165-2:1992": operationalState	{2 9 3 2 7 35}	ENUMERATED	–		o.1		–		–		–		–		
40	operationalSystemType	{2 13 0 2 7 109}	ENUMERATED	c1		o.1		–		–		–		–		
41	"ISO/IEC 10589:1992": originatingL1LSPBufferSize	{2 13 0 1 7 9}	INTEGER "ISO/IEC 10589:1992": constraintViolation	c1		o.1		o.1		–		–		–		

Copyright International Organization for Standardization
Provided by IHS under license with ISO
No reproduction or networking permitted without license from IHS
Not for Resale

Table E.1 *(concluded)*

				Set by create		Get		Replace		Add		Remove		Set to default		
Index	Attribute template label	Value of object identifier for attribute	Constraints and values	Status	Support	Status	Support	Status	Support	Status	Support	Status	Support	Status	Support	Additional information
42	"ISO/IEC 10589:1992": originatingL2LSPBufferSize	{2 13 0 1 7 26}	INTEGER "ISO/IEC 10589:1992": constraintViolation	c1		o.1		o.1		–		–		o.1		
43	"ISO/IEC 10589:1992": ownLSPPurges	{2 13 0 1 7 24}	INTEGER	–		o.1		–		–		–		–		
44	pDUDiscards	{2 13 0 2 7 10}	INTEGER	–		o.1		–		–		–		–		
45	CCITT Rec. X.721 (1992) | ISO/IEC 10165-2:1992": packages	{2 9 3 2 7 66}	SET OF OBJECT IDENTIFIER	c1		o.1		–		–		–		–		
46	"ISO/IEC 10589:1992": partialSNPInterval	{2 13 0 1 7 14}	INTEGER	c1		o.1		o.1		–		–		–		
47	"ISO/IEC 10589:1992": partitionAreaAddresses	{2 13 0 1 7 29}	SET OF OCTET STRING	–		o.1		–		–		–		–		
48	"ISO/IEC 10589:1992": partitionDesignatedL2IntermediateSystem	{2 13 0 1 7 30}	OCTET STRING	–		o.1		–		–		–		–		
49	"ISO/IEC 10589:1992": partitionVirtualLinkChanges	{2 13 0 1 7 31}	INTEGER	–		o.1		–		–		–		–		
50	"ISO/IEC 10589:1992": pollESHelloRate	{2 13 0 1 7 13}	INTEGER	c1		o.1		o.1		–		–		–		
51	segmentsDiscarded	{2 13 0 2 7 7}	INTEGER	–		o.1		–		–		–		–		
52	segmentsReceived	{2 13 0 2 7 6}	INTEGER	–		o.1		–		–		–		–		
53	segmentsSent	{2 13 0 2 7 118}	INTEGER	–		o.1		–		–		–		–		
54	"ISO/IEC 10589:1992": sequenceNumberSkips	{2 13 0 1 7 23}	INTEGER	–		o.1		–		–		–		–		
55	supportedProtocols	{2 13 0 2 7 110}	SET OF SEQUENCE	–		o.1		–		–		–		–		
56	"ISO/IEC 10589:1992": systemId	{2 13 0 1 7 119}	OCTET STRING	–		o.1		–		–		–		–		
57	"ITU-T Rec. X.723 (1993) | ISO/IEC 10165-5:1994": totalRemoteSAPs	{2 9 3 5 7 13}	INTEGER	–		o.1		–		–		–		–		
58	"ISO/IEC 10589:1992": version	{2 13 0 1 7 1}	GraphicString	–		o.1		–		–		–		–		
59	"ISO/IEC 10589:1992": waitingTime	{2 13 0 1 7 15}	INTEGER	c1		o.1		o.1		–		–		–		
c1: if E.28/1a then o.1 else –																

Copyright International Organization for Standardization
Provided by IHS under license with ISO
No reproduction or networking permitted without license from IHS
Not for Resale

E.4.1.2 The CONS managed object

See Table E.2.

Table E.2 – cONS Attribute support

				Set by create		Get		Replace		Add		Remove		Set to default		
Index	Attribute template label	Value of object identifier for attribute	Constraints and values	Status	Support	Status	Support	Status	Support	Status	Support	Status	Support	Status	Support	Additional information
1	"CCITT Rec. X.721 (1992) | ISO/IEC 10165-2:1992": administrativeState	{2 9 3 2 7 31}	ENUMERATED	c2		o.1		o.1		–		–		–		
2	"CCITT Rec. X.721 (1992) | ISO/IEC 10165-2:1992": allomorphs	{2 9 3 2 7 50}	SET OF ObjectClass	c2		o.1		–		–		–		–		
3	"ITU-T Rec. X.723 (1993) | ISO/IEC 10165-5:1994": clProtocolMachineId	{2 9 3 5 7 2}	GraphicString	c2		o.1		–		–		–		–		
4	"CCITT Rec. X.721 (1992) | ISO/IEC 10165-2:1992": nameBinding	{2 9 3 2 7 63}	OBJECT IDENTIFIER	c2		o.1		–		–		–		–		
5	"CCITT Rec. X.721 (1992) | ISO/IEC 10165-2:1992": objectClass	{2 9 3 2 7 65}	ObjectClass	c2		o.1		–		–		–		–		
6	"CCITT Rec. X.721 (1992) | ISO/IEC 10165-2:1992": operationalState	{2 9 3 2 7 35}	ENUMERATED	–		o.1		–		–		–		–		
7	operationalSystemType	{2 13 0 2 7 109}	ENUMERATED	c2		o.1		–		–		–		–		
8	"CCITT Rec. X.721 (1992) | ISO/IEC 10165-2:1992": packages	{2 9 3 2 7 66}	SET OF OBJECT IDENTIFIER	c2		o.1		–		–		–		–		
c2: if E.29/1a then o.1 else –																

--`,,```,,,,````-`-`,,`,,`,`,,`---

Copyright International Organization for Standardization
Provided by IHS under license with ISO
No reproduction or networking permitted without license from IHS
Not for Resale

E.4.1.3 The Recommendation D-Series counts managed object

See Table E.3.

Table E.3 – dSeriesCounts Attribute support

				Set by create		Get		Replace		Add		Remove		Set to default		
Index	Attribute template label	Value of object identifier for attribute	Constraints and values	Status	Support	Status	Support	Status	Support	Status	Support	Status	Support	Status	Support	Additional information
1	"CCITT Rec. X.721 (1992) | ISO/IEC 10165-2:1992": allomorphs	{2 9 3 2 7 50}	SET OF ObjectClass	c3		o.1		–		–		–		–		
2	dSeriesId	{2 13 0 2 7 140}	GraphicString	c3		o.1		–		–		–		–		
3	dSeriesResetRequestIndicationPackets	{2 13 0 2 7 141}	INTEGER	–		o.1		–		–		–		–		
4	dSeriesSegmentsReceived	{2 13 0 2 7 143}	INTEGER	–		o.1		–		–		–		–		
5	dSeriesSegmentsSent	{2 13 0 2 7 142}	INTEGER	–		o.1		–		–		–		–		
6	"CCITT Rec. X.721 (1992) | ISO/IEC 10165-2:1992": nameBinding	{2 9 3 2 7 63}	OBJECT IDENTIFIER	c3		o.1		–		–		–		–		
7	"CCITT Rec. X.721 (1992) | ISO/IEC 10165-2:1992": objectClass	{2 9 3 2 7 65}	ObjectClass	c3		o.1		–		–		–		–		
8	"CCITT Rec. X.721 (1992) | ISO/IEC 10165-2:1992": packages	{2 9 3 2 7 66}	SET OF OBJECT IDENTIFIER	c3		o.1		–		–		–		–		
c3: if E.30/1a then o.1 else –																

Copyright International Organization for Standardization
Provided by IHS under license with ISO
No reproduction or networking permitted without license from IHS
Not for Resale

E.4.1.4 The linkage managed object

See Table E.4.

Table E.4 – linkage Attribute support

				Set by create		Get		Replace		Add		Remove		Set to default		
Index	Attribute template label	Value of object identifier for attribute	Constraints and values	Status	Support	Status	Support	Status	Support	Status	Support	Status	Support	Status	Support	Additional information
1	activeESConfigTimer	{2 13 0 2 7 22}	SEQUENCE	–		o.1		–		–		–		–		
2	“CCITT Rec. X.721 (1992) | ISO/IEC 10165-2:1992”: administrativeState	{2 9 3 2 7 31}	ENUMERATED	c4		o.1		o.1		–		–		–		
3	“CCITT Rec. X.721 (1992) | ISO/IEC 10165-2:1992”: allomorphs	{2 9 3 2 7 50}	SET OF ObjectClass	c4		o.1		–		–		–		–		
4	“ISO/IEC 10589:1992”: authenticationFailures	{2 13 0 1 7 117}	INTEGER	–		o.1		–		–		–		–		
5	“ISO/IEC 10589:1992”: callEstablishmentDefaultMetricIncrement	{2 13 0 1 7 52}	INTEGER	c4		o.1		o.1		–		–		o.1		
6	“ISO/IEC 10589:1992”: callEstablishmentDelayMetricIncrement	{2 13 0 1 7 53}	INTEGER	c4		o.1		o.1		–		–		o.1		
7	“ISO/IEC 10589:1992”: callEstablishmentErrorMetricIncrement	{2 13 0 1 7 55}	INTEGER	c4		o.1		o.1		–		–		o.1		
8	“ISO/IEC 10589:1992”: callEstablishmentExpenseMetricIncrement	{2 13 0 1 7 54}	INTEGER	c4		o.1		o.1		–		–		o.1		
9	callsFailed	{2 13 0 2 7 30}	INTEGER	–		o.1		–		–		–		–		
10	callsPlaced	{2 13 0 2 7 29}	INTEGER	–		o.1		–		–		–		–		
11	“ISO/IEC 10589:1992”: changesInAdjacencyState	{2 13 0 1 7 40}	INTEGER	–		o.1		–		–		–		–		
12	“ISO/IEC 10589:1992”: circuitReceivePasswords	{2 13 0 1 7 116}	SET OF OCTET STRING	c4		o.1		o.1		o.1		o.1		o.1		
13	“ISO/IEC 10589:1992”: circuitTransmitPassword	{2 13 0 1 7 115}	OCTET STRING	c4		o.1		o.1		–		–		o.1		

Copyright International Organization for Standardization
Provided by IHS under license with ISO
No reproduction or networking permitted without license from IHS
Not for Resale

Table E.4 *(continued)*

				Set by create		Get		Replace		Add		Remove		Set to default		
Index	Attribute template label	Value of object identifier for attribute	Constraints and values	Status	Support	Status	Support	Status	Support	Status	Support	Status	Support	Status	Support	Additional information
14	defaultESConfigTimer	{2 13 0 2 7 21}	SEQUENCE	c4		o.1		o.1		–		–		o.1		
15	eSReachabilityChanges	{2 13 0 2 7 27}	INTEGER	–		o.1		–		–		–		–		
16	enableChecksum	{2 13 0 2 7 4}	BOOLEAN	c4		o.1		o.1		–		–		o.1		
17	“ISO/IEC 10589:1992”: externalDomain	{2 13 0 1 7 46}	BOOLEAN	c4		o.1		o.1		–		–		o.1		
18	holdingTimerMultiplier	{2 13 0 2 7 20}	INTEGER	c4		o.1		o.1		–		–		o.1		
19	“ISO/IEC 10589:1992”: iDFieldLengthMismatches	{2 13 0 1 7 25}	INTEGER	–		o.1		–		–		–		–		
20	iSConfigurationTimer	{2 13 0 2 7 24}	SEQUENCE	c4		o.1		o.1		–		–		o.1		
21	“ISO/IEC 10589:1992”: iSISControlPDUsReceived	{2 13 0 1 7 44}	INTEGER	–		o.1		–		–		–		–		
22	“ISO/IEC 10589:1992”: iSISControlPDUsSent	{2 13 0 1 7 43}	INTEGER	–		o.1		–		–		–		–		
23	“ISO/IEC 10589:1992”: iSISHelloTimer	{2 13 0 1 7 45}	INTEGER	c4		o.1		o.1		–		–		o.1		
24	iSO9542OperationalSubsets	{2 13 0 2 7 115}	BIT STRING	c4		o.1		o.1		–		–		–		
25	iSReachabilityChanges	{2 13 0 2 7 23}	INTEGER	–		o.1		–		–		–		–		
26	idleTimer	{2 13 0 2 7 31}	SEQUENCE	c4		o.1		o.1		–		–		o.1		
27	initialMinimumTimer	{2 13 0 2 7 33}	SEQUENCE	c4		o.1		o.1		–		–		o.1		
28	“ISO/IEC 10589:1992”: initializationFailures	{2 13 0 1 7 41}	INTEGER	–		o.1		–		–		–		–		
29	invalid9542PDUs	{2 13 0 2 7 101}	INTEGER	–		o.1		–		–		–		–		
30	“ISO/IEC 10589:1992”: l1CircuitID	{2 13 0 1 7 48}	OCTET STRING	–		o.1		–		–		–		–		
31	“ISO/IEC 10589:1992”: l1DefaultMetric	{2 13 0 1 7 35}	INTEGER	c4		o.1		o.1		–		–		o.1		
32	“ISO/IEC 10589:1992”: l1DelayMetric	{2 13 0 1 7 36}	INTEGER	c4		o.1		o.1		–		–		o.1		
33	“ISO/IEC 10589:1992”: l1DesignatedIntermediateSystem	{2 13 0 1 7 49}	OCTET STRING	–		o.1		–		–		–		–		

Copyright International Organization for Standardization
Provided by IHS under license with ISO
No reproduction or networking permitted without license from IHS
Not for Resale

Table E.4 *(continued)*

				Set by create		Get		Replace		Add		Remove		Set to default		
Index	Attribute template label	Value of object identifier for attribute	Constraints and values	Status	Support	Status	Support	Status	Support	Status	Support	Status	Support	Status	Support	Additional information
34	"ISO/IEC 10589:1992": l1ErrorMetric	{2 13 0 1 7 38}	INTEGER	c4		o.1		o.1		–		–		o.1		
35	"ISO/IEC 10589:1992": l1ExpenseMetric	{2 13 0 1 7 37}	INTEGER	c4		o.1		o.1		–		–		o.1		
36	"ISO/IEC 10589:1992": l1IntermediateSystemPriority	{2 13 0 1 7 47}	INTEGER	c4		o.1		o.1		–		–		o.1		
37	"ISO/IEC 10589:1992": l2CircuitID	{2 13 0 1 7 74}	OCTET STRING	–		o.1		–		–		–		–		
38	"ISO/IEC 10589:1992": l2DefaultMetric	{2 13 0 1 7 68}	INTEGER	c4		o.1		o.1		–		–		o.1		
39	"ISO/IEC 10589:1992": l2DelayMetric	{2 13 0 1 7 69}	INTEGER	c4		o.1		o.1		–		–		o.1		
40	"ISO/IEC 10589:1992": l2DesignatedIntermediateSystem	{2 13 0 1 7 75}	OCTET STRING	–		o.1		–		–		–		–		
41	"ISO/IEC 10589:1992": l2ErrorMetric	{2 13 0 1 7 71}	INTEGER	c4		o.1		o.1		–		–		o.1		
42	"ISO/IEC 10589:1992": l2ExpenseMetric	{2 13 0 1 7 70}	INTEGER	c4		o.1		o.1		–		–		o.1		
43	"ISO/IEC 10589:1992": l2IntermediateSystemPriority	{2 13 0 1 7 73}	INTEGER	c4		o.1		o.1		–		–		o.1		
44	"ISO/IEC 10589:1992": lanL1DesignatedIntermediateSystemChanges	{2 13 0 1 7 50}	INTEGER	–		o.1		–		–		–		–		
45	"ISO/IEC 10589:1992": lanL2DesignatedIntermediateSystemChanges	{2 13 0 1 7 76}	INTEGER	–		o.1		–		–		–		–		
46	linkageId	{2 13 0 2 7 17}	GraphicString	c4		o.1		–		–		–		–		
47	manualISSNPAAddress	{2 13 0 2 7 28}	SET OF SEQUENCE	c4		o.1		o.1		o.1		o.1		o.1		
48	"ISO/IEC 10589:1992": manualL2OnlyMode	{2 13 0 1 7 72}	BOOLEAN "ISO/IEC 10589:1992": constraintViolation	c4		o.1		o.1		–		–		o.1		

Copyright International Organization for Standardization
Provided by IHS under license with ISO
No reproduction or networking permitted without license from IHS
Not for Resale

Table E.4 *(concluded)*

				Set by create		Get		Replace		Add		Remove		Set to default		
Index	Attribute template label	Value of object identifier for attribute	Constraints and values	Status	Support	Status	Support	Status	Support	Status	Support	Status	Support	Status	Support	Additional information
49	"ISO/IEC 10589:1992": maximumAreaAddressesMismatches	{2 13 0 1 7 118}	INTEGER	–		o.1		–		–		–		–		
50	"CCITT Rec. X.721 (1992) | ISO/IEC 10165-2:1992": nameBinding	{2 9 3 2 7 63}	OBJECT IDENTIFIER	c4		o.1		–		–		–		–		
51	"CCITT Rec. X.721 (1992) | ISO/IEC 10165-2:1992": objectClass	{2 9 3 2 7 65}	ObjectClass	c4		o.1		–		–		–		–		
52	operationalProtocols	{2 13 0 2 7 111}	SET OF SEQUENCE	c4		o.1		–		–		–		–		
53	"CCITT Rec. X.721 (1992) | ISO/IEC 10165-2:1992": operationalState	{2 9 3 2 7 35}	ENUMERATED	–		o.1		–		–		–		–		
54	"ISO/IEC 10589:1992": outgoingCallIVMO	{2 13 0 1 7 120}	OCTET STRING	c4		o.1		o.1		–		–		o.1		
55	"CCITT Rec. X.721 (1992) | ISO/IEC 10165-2:1992": packages	{2 9 3 2 7 66}	SET OF OBJECT IDENTIFIER	c4		o.1		–		–		–		–		
56	"ISO/IEC 10589:1992": ptPtCircuitID	{2 13 0 1 7 51}	OCTET STRING	–		o.1		–		–		–		–		
57	redirectHoldingTime	{2 13 0 2 7 26}	INTEGER	c4		o.1		o.1		–		–		o.1		
58	"ISO/IEC 10589:1992": rejectedAdjacencies	{2 13 0 1 7 42}	INTEGER	–		o.1		–		–		–		–		
59	reserveTimer	{2 13 0 2 7 32}	SEQUENCE	c4		o.1		o.1		–		–		o.1		
60	sN-SAP	{2 13 0 2 7 18}	ObjectInstance	–		o.1		–		–		–		–		
61	sN-ServiceProvider	{2 13 0 2 7 19}	ObjectInstance	c4		o.1		–		–		–		–		
62	suggestedESConfigurationTimer	{2 13 0 2 7 25}	SEQUENCE	c4		o.1		o.1		–		–		o.1		
63	"ISO/IEC 10589:1992": type	{2 13 0 1 7 33}	ENUMERATED	c4		o.1		–		–		–		–		
64	neighbourSNPAAddress	{2 13 0 1 7 79}	SEQUENCE	c4		o.1		o.1		–		–		o.1		
c4: if E.31/1a then o.1 else –																

Copyright International Organization for Standardization
Provided by IHS under license with ISO
No reproduction or networking permitted without license from IHS
Not for Resale

E.4.1.5 The NSAP managed object

See Table E.5.

Table E.5 – nSAP Attribute support

				Set by create		Get		Replace		Add		Remove		Set to default		
Index	Attribute template label	Value of object identifier for attribute	Constraints and values	Status	Support	Status	Support	Status	Support	Status	Support	Status	Support	Status	Support	Additional information
1	"CCITT Rec. X.721 (1992) | ISO/IEC 10165-2:1992": allomorphs	{2 9 3 2 7 50}	SET OF ObjectClass	c5		o.1		–		–		–		–		
2	"CCITT Rec. X.721 (1992) | ISO/IEC 10165-2:1992": nameBinding	{2 9 3 2 7 63}	OBJECT IDENTIFIER	c5		o.1		–		–		–		–		
3	"CCITT Rec. X.721 (1992) | ISO/IEC 10165-2:1992": objectClass	{2 9 3 2 7 65}	ObjectClass	c5		o.1		–		–		–		–		
4	"CCITT Rec. X.721 (1992) | ISO/IEC 10165-2:1992": packages	{2 9 3 2 7 66}	SET OF OBJECT IDENTIFIER	c5		o.1		–		–		–		–		
5	"ITU-T Rec. X.723 (1993) | ISO/IEC 10165-5:1994": providerEntityNames	{2 9 3 5 7 7}	SET OF ObjectInstance	–		o.1		–		–		–		–		
6	"ITU-T Rec. X.723 (1993) | ISO/IEC 10165-5:1994": sap2Address	{2 9 3 5 7 9}	SET OF OCTET STRING	c5		o.1		–		–		–		–		
7	"ITU-T Rec. X.723 (1993) | ISO/IEC 10165-5:1994": sapId	{2 9 3 5 7 10}	GraphicString	c5		o.1		–		–		–		–		
8	"ITU-T Rec. X.723 (1993) | ISO/IEC 10165-5:1994": userEntityNames	{2 9 3 5 7 15}	SET OF ObjectInstance	–		o.1		–		–		–		–		
c5: if E.32/1a then o.1 else –																

Copyright International Organization for Standardization
Provided by IHS under license with ISO
No reproduction or networking permitted without license from IHS
Not for Resale

E.4.1.6 The network connection managed object

See Table E.6.

Table E.6 – networkConnection Attribute support

				Set by create		Get		Replace		Add		Remove		Set to default		
Index	Attribute template label	Value of object identifier for attribute	Constraints and values	Status	Support	Status	Support	Status	Support	Status	Support	Status	Support	Status	Support	Additional information
1	"CCITT Rec. X.721 (1992) | ISO/IEC 10165-2:1992": allomorphs	{2 9 3 2 7 50}	SET OF ObjectClass	–		o.1		–		–		–		–		
2	"ITU-T Rec. X.723 (1993) | ISO/IEC 10165-5:1994": connectionId	{2 9 3 5 7 1}	GraphicString	–		o.1		–		–		–		–		
3	localNSAPMO	{2 13 0 2 7 106}	ObjectInstance	–		o.1		–		–		–		–		
4	"CCITT Rec. X.721 (1992) | ISO/IEC 10165-2:1992": nameBinding	{2 9 3 2 7 63}	OBJECT IDENTIFIER	–		o.1		–		–		–		–		
5	"CCITT Rec. X.721 (1992) | ISO/IEC 10165-2:1992": objectClass	{2 9 3 2 7 65}	ObjectClass	–		o.1		–		–		–		–		
6	"CCITT Rec. X.721 (1992) | ISO/IEC 10165-2:1992": packages	{2 9 3 2 7 66}	SET OF OBJECT IDENTIFIER	–		o.1		–		–		–		–		
7	remoteNSAPAddress	{2 13 0 2 7 107}	OCTET STRING	–		o.1		–		–		–		–		
8	"ITU-T Rec. X.723 (1993) | ISO/IEC 10165-5:1994": supportedConnectionNames	{2 9 3 5 7 12}	SET OF ObjectInstance	–		o.1		–		–		–		–		
9	"ITU-T Rec. X.723 (1993) | ISO/IEC 10165-5:1994": underlyingConnectionNames	{2 9 3 5 7 14}	SET OF ObjectInstance	–		o.1		–		–		–		–		

Copyright International Organization for Standardization
Provided by IHS under license with ISO
No reproduction or networking permitted without license from IHS
Not for Resale

E.4.1.7 The network entity managed object

See Table E.7.

Table E.7 – networkEntity Attribute support

				Set by create		Get		Replace		Add		Remove		Set to default		
Index	Attribute template label	Value of object identifier for attribute	Constraints and values	Status	Support	Status	Support	Status	Support	Status	Support	Status	Support	Status	Support	Additional information
1	"CCITT Rec. X.721 (1992) | ISO/IEC 10165-2:1992": allomorphs	{2 9 3 2 7 50}	SET OF ObjectClass	c6		o.1		–		–		–		–		
2	"ITU-T Rec. X.723 (1993) | ISO/IEC 10165-5:1994": communicationsEntityId	{2 9 3 5 7 0}	GraphicString	c6		o.1		–		–		–		–		
3	"ITU-T Rec. X.723 (1993) | ISO/IEC 10165-5:1994": localSapNames	{2 9 3 5 7 6}	SET OF ObjectInstance	–		o.1		–		–		–		–		
4	"CCITT Rec. X.721 (1992) | ISO/IEC 10165-2:1992": nameBinding	{2 9 3 2 7 63}	OBJECT IDENTIFIER	c6		o.1		–		–		–		–		
5	networkEntityTitles	{2 13 0 2 7 3}	SET OF OCTET STRING	c6		o.1		o.1		o.1		o.1		–		
6	"CCITT Rec. X.721 (1992) | ISO/IEC 10165-2:1992": objectClass	{2 9 3 2 7 65}	ObjectClass	c6		o.1		–		–		–		–		
7	"CCITT Rec. X.721 (1992) | ISO/IEC 10165-2:1992": operationalState	{2 9 3 2 7 35}	ENUMERATED	–		o.1		–		–		–		–		
8	"CCITT Rec. X.721 (1992) | ISO/IEC 10165-2:1992": packages	{2 9 3 2 7 66}	SET OF OBJECT IDENTIFIER	c6		o.1		–		–		–		–		
9	systemTypes	{2 13 0 2 7 108}	SET OF ENUMERATED	–		o.1		–		–		–		–		
c6: if E.34/1a then o.1 else –																

Copyright International Organization for Standardization
Provided by IHS under license with ISO
No reproduction or networking permitted without license from IHS
Not for Resale

E.4.1.8 The network subsystem managed object

See Table E.8.

Table E.8 – networkSubsystem Attribute support

				Set by create		Get		Replace		Add		Remove		Set to default		
Index	Attribute template label	Value of object identifier for attribute	Constraints and values	Status	Support	Status	Support	Status	Support	Status	Support	Status	Support	Status	Support	Additional information
1	"CCITT Rec. X.721 (1992) | ISO/IEC 10165-2:1992": allomorphs	{2 9 3 2 7 50}	SET OF ObjectClass	–		o.1		–		–		–		–		
2	"CCITT Rec. X.721 (1992) | ISO/IEC 10165-2:1992": nameBinding	{2 9 3 2 7 63}	OBJECT IDENTIFIER	–		o.1		–		–		–		–		
3	"CCITT Rec. X.721 (1992) | ISO/IEC 10165-2:1992": objectClass	{2 9 3 2 7 65}	ObjectClass	–		o.1		–		–		–		–		
4	"CCITT Rec. X.721 (1992) | ISO/IEC 10165-2:1992": packages	{2 9 3 2 7 66}	SET OF OBJECT IDENTIFIER	–		o.1		–		–		–		–		
5	"ITU-T Rec. X.723 (1993) | ISO/IEC 10165-5:1994": subsystemId	{2 9 3 5 7 11}	GraphicString	–		o.1		–		–		–		–		

Copyright International Organization for Standardization
Provided by IHS under license with ISO
No reproduction or networking permitted without license from IHS
Not for Resale

E.4.1.9 The permanent virtual circuit-DCE managed object

See Table E.9.

Table E.9 – permanentVirtualCircuit-DCE Attribute support

				Set by create		Get		Replace		Add		Remove		Set to default		
Index	Attribute template label	Value of object identifier for attribute	Constraints and values	Status	Support	Status	Support	Status	Support	Status	Support	Status	Support	Status	Support	Additional information
1	"CCITT Rec. X.721 (1992) | ISO/IEC 10165-2:1992": allomorphs	{2 9 3 2 7 50}	SET OF ObjectClass	o.1		o.1		–		–		–		–		
2	chargingDirection	{2 13 0 2 7 131}	BOOLEAN	–		o.1		–		–		–		–		
3	dataPacketsReceived	{2 13 0 2 7 51}	INTEGER	–		o.1		–		–		–		–		
4	dataPacketsSent	{2 13 0 2 7 50}	INTEGER	–		o.1		–		–		–		–		
5	interruptPacketsReceived	{2 13 0 2 7 68}	INTEGER	–		o.1		–		–		–		–		
6	interruptPacketsSent	{2 13 0 2 7 67}	INTEGER	–		o.1		–		–		–		–		
7	interruptTimerExpiries	{2 13 0 2 7 69}	INTEGER	–		o.1		–		–		–		–		
8	logicalChannel	{2 13 0 2 7 89}	INTEGER	o.1		o.1		–		–		–		–		
9	"CCITT Rec. X.721 (1992) | ISO/IEC 10165-2:1992": nameBinding	{2 9 3 2 7 63}	OBJECT IDENTIFIER	o.1		o.1		–		–		–		–		
10	"CCITT Rec. X.721 (1992) | ISO/IEC 10165-2:1992": objectClass	{2 9 3 2 7 65}	ObjectClass	o.1		o.1		–		–		–		–		
11	"CCITT Rec. X.721 (1992) | ISO/IEC 10165-2:1992": octetsReceivedCounter	{2 9 3 2 7 78}	INTEGER	–		o.1		–		–		–		–		
12	"CCITT Rec. X.721 (1992) | ISO/IEC 10165-2:1992": octetsSentCounter	{2 9 3 2 7 80}	INTEGER	–		o.1		–		–		–		–		
13	"CCITT Rec. X.721 (1992) | ISO/IEC 10165-2:1992": operationalState	{2 9 3 2 7 35}	ENUMERATED	–		o.1		–		–		–		–		

Copyright International Organization for Standardization
Provided by IHS under license with ISO
No reproduction or networking permitted without license from IHS
Not for Resale

Table E.9 *(concluded)*

				Set by create		Get		Replace		Add		Remove		Set to default		
Index	Attribute template label	Value of object identifier for attribute	Constraints and values	Status	Support	Status	Support	Status	Support	Status	Support	Status	Support	Status	Support	Additional information
14	"CCITT Rec. X.721 (1992) | ISO/IEC 10165-2:1992": packages	{2 9 3 2 7 66}	SET OF OBJECT IDENTIFIER	o.1		o.1		–		–		–		–		
15	packetSizes	{2 13 0 2 7 121}	SEQUENCE	o.1		o.1		–		–		–		–		
16	providerInitiatedDisconnects	{2 13 0 2 7 54}	INTEGER	–		o.1		–		–		–		–		
17	providerInitiatedResets	{2 13 0 2 7 59}	INTEGER	–		o.1		–		–		–		–		
18	remoteDTEAddress	{2 13 0 2 7 93}	SEQUENCE	–		o.1		–		–		–		–		
19	remoteLogicalChannel	{2 13 0 2 7 162}	INTEGER	–		o.1		–		–		–		–		
20	remotelyInitiatedResets	{2 13 0 2 7 57}	INTEGER	–		o.1		–		–		–		–		
21	remotelyInitiatedRestarts	{2 13 0 2 7 61}	INTEGER	–		o.1		–		–		–		–		
22	resetTimeouts	{2 13 0 2 7 60}	INTEGER	–		o.1		–		–		–		–		
23	throughputClasses	{2 13 0 2 7 96}	SEQUENCE	o.1		o.1		–		–		–		–		
24	virtualCircuitId	{2 13 0 2 7 116}	GraphicString	o.1		o.1		–		–		–		–		
25	windowSizes	{2 13 0 2 7 124}	SEQUENCE	o.1		o.1		–		–		–		–		
26	x25SegmentsReceived	{2 13 0 2 7 171}	INTEGER	–		o.1		–		–		–		–		
27	x25SegmentsSent	{2 13 0 2 7 170}	INTEGER	–		o.1		–		–		–		–		

Copyright International Organization for Standardization
Provided by IHS under license with ISO
No reproduction or networking permitted without license from IHS
Not for Resale

E.4.1.10 The permanent virtual circuit-DTE managed object

See Table E.10.

Table E.10 – permanentVirtualCircuit-DTE Attribute support

				Set by create		Get		Replace		Add		Remove		Set to default		
Index	Attribute template label	Value of object identifier for attribute	Constraints and values	Status	Support	Status	Support	Status	Support	Status	Support	Status	Support	Status	Support	Additional information
1	"CCITT Rec. X.721 (1992) | ISO/IEC 10165-2:1992": allomorphs	{2 9 3 2 7 50}	SET OF ObjectClass	o.1		o.1		–		–		–		–		
2	dataPacketsReceived	{2 13 0 2 7 51}	INTEGER	–		o.1		–		–		–		–		
3	dataPacketsSent	{2 13 0 2 7 50}	INTEGER	–		o.1		–		–		–		–		
4	dataRetransmissionTimerExpiries	{2 13 0 2 7 58}	INTEGER	–		o.1		–		–		–		–		
5	interruptPacketsReceived	{2 13 0 2 7 68}	INTEGER	–		o.1		–		–		–		–		
6	interruptPacketsSent	{2 13 0 2 7 67}	INTEGER	–		o.1		–		–		–		–		
7	interruptTimerExpiries	{2 13 0 2 7 69}	INTEGER	–		o.1		–		–		–		–		
8	logicalChannel	{2 13 0 2 7 89}	INTEGER	o.1		o.1		–		–		–		–		
9	"CCITT Rec. X.721 (1992) | ISO/IEC 10165-2:1992": nameBinding	{2 9 3 2 7 63}	OBJECT IDENTIFIER	o.1		o.1		–		–		–		–		
10	"CCITT Rec. X.721 (1992) | ISO/IEC 10165-2:1992": objectClass	{2 9 3 2 7 65}	ObjectClass	o.1		o.1		–		–		–		–		
11	"CCITT Rec. X.721 (1992) | ISO/IEC 10165-2:1992": octetsReceivedCounter	{2 9 3 2 7 78}	INTEGER	–		o.1		–		–		–		–		
12	"CCITT Rec. X.721 (1992) | ISO/IEC 10165-2:1992": octetsSentCounter	{2 9 3 2 7 80}	INTEGER	–		o.1		–		–		–		–		
13	"CCITT Rec. X.721 (1992) | ISO/IEC 10165-2:1992": packages	{2 9 3 2 7 66}	SET OF OBJECT IDENTIFIER	o.1		o.1		–		–		–		–		
14	packetSizes	{2 13 0 2 7 121}	SEQUENCE	o.1		o.1		–		–		–		–		
15	providerInitiatedResets	{2 13 0 2 7 59}	INTEGER	–		o.1		–		–		–		–		
16	remotelyInitiatedResets	{2 13 0 2 7 57}	INTEGER	–		o.1		–		–		–		–		
17	resetTimeouts	{2 13 0 2 7 60}	INTEGER	–		o.1		–		–		–		–		
18	throughputClasses	{2 13 0 2 7 96}	SEQUENCE	o.1		o.1		–		–		–		–		
19	virtualCircuitId	{2 13 0 2 7 116}	GraphicString	o.1		o.1		–		–		–		–		
20	windowSizes	{2 13 0 2 7 124}	SEQUENCE	o.1		o.1		–		–		–		–		

Copyright International Organization for Standardization
Provided by IHS under license with ISO
No reproduction or networking permitted without license from IHS
Not for Resale

E.4.1.11 The virtual call-DCE managed object

See Table E.11.

Table E.11 – virtualCall-DCE Attribute support

				Set by create		Get		Replace		Add		Remove		Set to default		
Index	Attribute template label	Value of object identifier for attribute	Constraints and values	Status	Support	Status	Support	Status	Support	Status	Support	Status	Support	Status	Support	Additional information
1	"CCITT Rec. X.721 (1992) | ISO/IEC 10165-2:1992": allomorphs	{2 9 3 2 7 50}	SET OF ObjectClass	c7		o.1		–		–		–		–		
2	bilateralCUGSelection	{2 13 0 2 7 126}	BOOLEAN	–		o.1		–		–		–		–		
3	cUGSelection	{2 13 0 2 7 135}	BOOLEAN	–		o.1		–		–		–		–		
4	cUGWithOutgoingAccessSelection	{2 13 0 2 7 138}	BOOLEAN	–		o.1		–		–		–		–		
5	callRedirectionDeflectionNotification	{2 13 0 2 7 130}	BOOLEAN	–		o.1		–		–		–		–		
6	calledLineAddressModifiedNotification	{2 13 0 2 7 128}	BOOLEAN	–		o.1		–		–		–		–		
7	chargingDirection	{2 13 0 2 7 131}	BOOLEAN	–		o.1		–		–		–		–		
8	dataPacketsReceived	{2 13 0 2 7 51}	INTEGER	–		o.1		–		–		–		–		
9	dataPacketsSent	{2 13 0 2 7 50}	INTEGER	–		o.1		–		–		–		–		
10	direction	{2 13 0 2 7 92}	ENUMERATED	–		o.1		–		–		–		–		
11	fastSelect	{2 13 0 2 7 76}	ENUMERATED	–		o.1		–		–		–		–		
12	interruptPacketsReceived	{2 13 0 2 7 68}	INTEGER	–		o.1		–		–		–		–		
13	interruptPacketsSent	{2 13 0 2 7 67}	INTEGER	–		o.1		–		–		–		–		
14	interruptTimerExpiries	{2 13 0 2 7 69}	INTEGER	–		o.1		–		–		–		–		
15	logicalChannel	{2 13 0 2 7 89}	INTEGER	–		o.1		–		–		–		–		
16	nUISelection	{2 13 0 2 7 155}	BOOLEAN	–		o.1		–		–		–		–		
17	"CCITT Rec. X.721 (1992) | ISO/IEC 10165-2:1992": nameBinding	{2 9 3 2 7 63}	OBJECT IDENTIFIER	c7		o.1		–		–		–		–		
18	"CCITT Rec. X.721 (1992) | ISO/IEC 10165-2:1992": objectClass	{2 9 3 2 7 65}	ObjectClass	c7		o.1		–		–		–		–		

Copyright International Organization for Standardization
Provided by IHS under license with ISO
No reproduction or networking permitted without license from IHS
Not for Resale

Table E.11 *(concluded)*

				Set by create		Get		Replace		Add		Remove		Set to default		
Index	Attribute template label	Value of object identifier for attribute	Constraints and values	Status	Support	Status	Support	Status	Support	Status	Support	Status	Support	Status	Support	Additional information
19	"CCITT Rec. X.721 (1992) | ISO/IEC 10165-2:1992": octetsReceivedCounter	{2 9 3 2 7 78}	INTEGER	–		o.1		–		–		–		–		
20	"CCITT Rec. X.721 (1992) | ISO/IEC 10165-2:1992": octetsSentCounter	{2 9 3 2 7 80}	INTEGER	–		o.1		–		–		–		–		
21	"CCITT Rec. X.721 (1992) | ISO/IEC 10165-2:1992": packages	{2 9 3 2 7 66}	SET OF OBJECT IDENTIFIER	c7		o.1		–		–		–		–		
22	packetSizes	{2 13 0 2 7 121}	SEQUENCE	–		o.1		–		–		–		–		
23	providerInitiatedDisconnects	{2 13 0 2 7 54}	INTEGER	–		o.1		–		–		–		–		
24	providerInitiatedResets	{2 13 0 2 7 59}	INTEGER	–		o.1		–		–		–		–		
25	rOASelection	{2 13 0 2 7 166}	BOOLEAN	–		o.1		–		–		–		–		
26	remoteDTEAddress	{2 13 0 2 7 93}	SEQUENCE	–		o.1		–		–		–		–		
27	remotelyInitiatedResets	{2 13 0 2 7 57}	INTEGER	–		o.1		–		–		–		–		
28	remotelyInitiatedRestarts	{2 13 0 2 7 61}	INTEGER	–		o.1		–		–		–		–		
29	resetTimeouts	{2 13 0 2 7 60}	INTEGER	–		o.1		–		–		–		–		
30	reverseCharging	{2 13 0 2 7 75}	BOOLEAN	–		o.1		–		–		–		–		
31	throughputClasses	{2 13 0 2 7 96}	SEQUENCE	–		o.1		–		–		–		–		
32	transitDelaySelectionAndIndication	{2 13 0 2 7 169}	BOOLEAN	–		o.1		–		–		–		–		
33	virtualCircuitId	{2 13 0 2 7 116}	GraphicString	c7		o.1		–		–		–		–		
34	windowSizes	{2 13 0 2 7 124}	SEQUENCE	–		o.1		–		–		–		–		
35	x25SegmentsReceived	{2 13 0 2 7 171}	INTEGER	–		o.1		–		–		–		–		
36	x25SegmentsSent	{2 13 0 2 7 170}	INTEGER	–		o.1		–		–		–		–		
c7: if E.37/1a then o.1 else –																

Copyright International Organization for Standardization
Provided by IHS under license with ISO
No reproduction or networking permitted without license from IHS
Not for Resale

E.4.1.12 The virtual call-DTE managed object

See Table E.12.

Table E.12 – virtualCall-DTE Attribute support

				Set by create		Get		Replace		Add		Remove		Set to default		
Index	Attribute template label	Value of object identifier for attribute	Constraints and values	Status	Support	Status	Support	Status	Support	Status	Support	Status	Support	Status	Support	Additional information
1	"CCITT Rec. X.721 (1992) | ISO/IEC 10165-2:1992": allomorphs	{2 9 3 2 7 50}	SET OF ObjectClass	–		o.1		–		–		–		–		
2	calledAddressExtension	{2 13 0 2 7 100}	OCTET STRING	–		o.1		–		–		–		–		
3	callingAddressExtension	{2 13 0 2 7 99}	OCTET STRING	–		o.1		–		–		–		–		
4	dataPacketsReceived	{2 13 0 2 7 51}	INTEGER	–		o.1		–		–		–		–		
5	dataPacketsSent	{2 13 0 2 7 50}	INTEGER	–		o.1		–		–		–		–		
6	dataRetransmissionTimerExpiries	{2 13 0 2 7 58}	INTEGER	–		o.1		–		–		–		–		
7	direction	{2 13 0 2 7 92}	ENUMERATED	–		o.1		–		–		–		–		
8	fastSelect	{2 13 0 2 7 76}	ENUMERATED	–		o.1		–		–		–		–		
9	interruptPacketsReceived	{2 13 0 2 7 68}	INTEGER	–		o.1		–		–		–		–		
10	interruptPacketsSent	{2 13 0 2 7 67}	INTEGER	–		o.1		–		–		–		–		
11	interruptTimerExpiries	{2 13 0 2 7 69}	INTEGER	–		o.1		–		–		–		–		
12	logicalChannel	{2 13 0 2 7 89}	INTEGER	–		o.1		–		–		–		–		
13	"CCITT Rec. X.721 (1992) | ISO/IEC 10165-2:1992": nameBinding	{2 9 3 2 7 63}	OBJECT IDENTIFIER	–		o.1		–		–		–		–		
14	"CCITT Rec. X.721 (1992) | ISO/IEC 10165-2:1992": objectClass	{2 9 3 2 7 65}	ObjectClass	–		o.1		–		–		–		–		
15	"CCITT Rec. X.721 (1992) | ISO/IEC 10165-2:1992": octetsReceivedCounter	{2 9 3 2 7 78}	INTEGER	–		o.1		–		–		–		–		
16	"CCITT Rec. X.721 (1992) | ISO/IEC 10165-2:1992": octetsSentCounter	{2 9 3 2 7 80}	INTEGER	–		o.1		–		–		–		–		

Copyright International Organization for Standardization
Provided by IHS under license with ISO
No reproduction or networking permitted without license from IHS

Table E.12 *(concluded)*

				Set by create		Get		Replace		Add		Remove		Set to default		
Index	Attribute template label	Value of object identifier for attribute	Constraints and values	Status	Support	Status	Support	Status	Support	Status	Support	Status	Support	Status	Support	Additional information
17	originallyCalledAddress	{2 13 0 2 7 98}	SEQUENCE	–		o.1		–		–		–		–		
18	"CCITT Rec. X.721 (1992) | ISO/IEC 10165-2:1992": packages	{2 9 3 2 7 66}	SET OF OBJECT IDENTIFIER	–		o.1		–		–		–		–		
19	packetSizes	{2 13 0 2 7 121}	SEQUENCE	–		o.1		–		–		–		–		
20	providerInitiatedResets	{2 13 0 2 7 59}	INTEGER	–		o.1		–		–		–		–		
21	redirectReason	{2 13 0 2 7 97}	INTEGER	–		o.1		–		–		–		–		
22	remoteDTEAddress	{2 13 0 2 7 93}	SEQUENCE	–		o.1		–		–		–		–		
23	remotelyInitiatedResets	{2 13 0 2 7 57}	INTEGER	–		o.1		–		–		–		–		
24	resetTimeouts	{2 13 0 2 7 60}	INTEGER	–		o.1		–		–		–		–		
25	reverseCharging	{2 13 0 2 7 75}	BOOLEAN	–		o.1		–		–		–		–		
26	throughputClasses	{2 13 0 2 7 96}	SEQUENCE	–		o.1		–		–		–		–		
27	virtualCircuitId	{2 13 0 2 7 116}	GraphicString	–		o.1		–		–		–		–		
28	windowSizes	{2 13 0 2 7 124}	SEQUENCE	–		o.1		–		–		–		–		

Not for Resale

Copyright International Organization for Standardization
Provided by IHS under license with ISO
No reproduction or networking permitted without license from IHS
Not for Resale

E.4.1.13 The virtual call initial values managed object

See Table E.13.

Table E.13 – virtualCallIVMO Attribute support

				Set by create		Get		Replace		Add		Remove		Set to default		
Index	Attribute template label	Value of object identifier for attribute	Constraints and values	Status	Support	Status	Support	Status	Support	Status	Support	Status	Support	Status	Support	Additional information
1	"CCITT Rec. X.721 (1992) | ISO/IEC 10165-2:1992": allomorphs	{2 9 3 2 7 50}	SET OF ObjectClass	o.1		o.1		–		–		–		–		
2	fastSelect	{2 13 0 2 7 76}	ENUMERATED	o.1		o.1		o.1		–		–		–		
3	"CCITT Rec. X.721 (1992) | ISO/IEC 10165-2:1992": nameBinding	{2 9 3 2 7 63}	OBJECT IDENTIFIER	o.1		o.1		–		–		–		–		
4	"CCITT Rec. X.721 (1992) | ISO/IEC 10165-2:1992": objectClass	{2 9 3 2 7 65}	ObjectClass	o.1		o.1		–		–		–		–		
5	"CCITT Rec. X.721 (1992) | ISO/IEC 10165-2:1992": packages	{2 9 3 2 7 66}	SET OF OBJECT IDENTIFIER	o.1		o.1		–		–		–		–		
6	packetSizes	{2 13 0 2 7 121}	SEQUENCE	o.1		o.1		o.1		–		–		–		
7	reverseCharging	{2 13 0 2 7 75}	BOOLEAN	o.1		o.1		o.1		–		–		–		
8	throughputClasses	{2 13 0 2 7 96}	SEQUENCE	o.1		o.1		o.1		–		–		–		
9	virtualCallIVMOId	{2 13 0 2 7 117}	GraphicString	o.1		o.1		–		–		–		–		
10	windowSizes	{2 13 0 2 7 124}	SEQUENCE	o.1		o.1		o.1		–		–		–		

Copyright International Organization for Standardization
Provided by IHS under license with ISO
No reproduction or networking permitted without license from IHS
Not for Resale

E.4.1.14 The X25 PLE-DCE managed object

See Table E.14.

Table E.14 – x25PLE-DCE Attribute support

				Set by create		Get		Replace		Add		Remove		Set to default		
Index	Attribute template label	Value of object identifier for attribute	Constraints and values	Status	Support	Status	Support	Status	Support	Status	Support	Status	Support	Status	Support	Additional information
1	"CCITT Rec. X.721 (1992) | ISO/IEC 10165-2:1992": administrativeState	{2 9 3 2 7 31}	ENUMERATED	c8		o.1		o.1		–		–		–		
2	"CCITT Rec. X.721 (1992) | ISO/IEC 10165-2:1992": allomorphs	{2 9 3 2 7 50}	SET OF ObjectClass	c8		o.1		–		–		–		–		
3	bilateralCUG	{2 13 0 2 7 125}	BOOLEAN	c8		o.1		o.1		–		–		o.1		
4	bilateralCUGWithOutgoingAccess	{2 13 0 2 7 127}	BOOLEAN	c8		o.1		o.1		–		–		o.1		
5	cUG	{2 13 0 2 7 134}	BOOLEAN	c8		o.1		o.1		–		–		o.1		
6	cUGWithIncomingAccess	{2 13 0 2 7 136}	BOOLEAN	c8		o.1		o.1		–		–		o.1		
7	cUGWithOutgoingAccess	{2 13 0 2 7 137}	BOOLEAN	c8		o.1		o.1		–		–		o.1		
8	callAttempts	{2 13 0 2 7 52}	INTEGER	–		o.1		–		–		–		–		
9	callDeflectionSubscription	{2 13 0 2 7 114}	BOOLEAN	c8		o.1		o.1		–		–		o.1		
10	callRedirection	{2 13 0 2 7 129}	BOOLEAN	c8		o.1		o.1		–		–		o.1		
11	callsConnected	{2 13 0 2 7 53}	INTEGER	–		o.1		–		–		–		–		
12	chargingInformation	{2 13 0 2 7 132}	BOOLEAN	c8		o.1		o.1		–		–		o.1		
13	clearIndication	{2 13 0 2 7 133}	INTEGER	c8		o.1		o.1		–		–		–		
14	dBitModification	{2 13 0 2 7 139}	BOOLEAN	c8		o.1		o.1		–		–		o.1		
15	dataPacketsReceived	{2 13 0 2 7 51}	INTEGER	–		o.1		–		–		–		–		
16	dataPacketsSent	{2 13 0 2 7 50}	INTEGER	–		o.1		–		–		–		–		
17	defaultPacketSizes	{2 13 0 2 7 103}	SEQUENCE	c8		o.1		o.1		–		–		o.1		
18	defaultThroughputClasses	{2 13 0 2 7 112}	SEQUENCE	c8		o.1		o.1		–		–		o.1		
19	defaultThroughputClassesAssignment	{2 13 0 2 7 144}	SEQUENCE	c8		o.1		o.1		–		–		o.1		
20	defaultWindowSizes	{2 13 0 2 7 104}	SEQUENCE	c8		o.1		o.1		–		–		o.1		
21	extendedPacketSequenceNumbering	{2 13 0 2 7 49}	INTEGER	c8		o.1		o.1		–		–		o.1		
22	fastSelectAcceptance	{2 13 0 2 7 145}	BOOLEAN	c8		o.1		o.1		–		–		o.1		

Copyright International Organization for Standardization
Provided by IHS under license with ISO
No reproduction or networking permitted without license from IHS
Not for Resale

Table E.14 *(continued)*

				Set by create		Get		Replace		Add		Remove		Set to default		
Index	Attribute template label	Value of object identifier for attribute	Constraints and values	Status	Support	Status	Support	Status	Support	Status	Support	Status	Support	Status	Support	Additional information
23	flowControlParameterNegotiation	{2 13 0 2 7 119}	BOOLEAN	c8		o.1		o.1		–		–		o.1		
24	huntGroup	{2 13 0 2 7 146}	BOOLEAN	c8		o.1		o.1		–		–		o.1		
25	incomingCall	{2 13 0 2 7 147}	INTEGER	c8		o.1		o.1		–		–		–		
26	incomingCallBarredWithinCUG	{2 13 0 2 7 149}	BOOLEAN	c8		o.1		o.1		–		–		o.1		
27	incomingCallsBarred	{2 13 0 2 7 148}	BOOLEAN	c8		o.1		o.1		–		–		o.1		
28	interruptPacketsReceived	{2 13 0 2 7 68}	INTEGER	–		o.1		–		–		–		–		
29	interruptPacketsSent	{2 13 0 2 7 67}	INTEGER	–		o.1		–		–		–		–		
30	interruptTimerExpiries	{2 13 0 2 7 69}	INTEGER	–		o.1		–		–		–		–		
31	localChargingPrevention	{2 13 0 2 7 150}	BOOLEAN	c8		o.1		o.1		–		–		o.1		
32	localDTEAddress	{2 13 0 2 7 39}	SEQUENCE	c8		o.1		o.1		–		–		–		
33	logicalChannelAssignments	{2 13 0 2 7 48}	SEQUENCE	c8		o.1		o.1		–		–		–		
34	nUIOverride	{2 13 0 2 7 154}	BOOLEAN	c8		o.1		o.1		–		–		o.1		
35	nUISubscription	{2 13 0 2 7 153}	BOOLEAN	c8		o.1		o.1		–		–		o.1		
36	“CCITT Rec. X.721 (1992) | ISO/IEC 10165-2:1992”: nameBinding	{2 9 3 2 7 63}	OBJECT IDENTIFIER	c8		o.1		–		–		–		–		
37	nonStandardDefaultPacketSizes	{2 13 0 2 7 151}	SEQUENCE	c8		o.1		o.1		–		–		o.1		
38	nonStandardDefaultWindowSizes	{2 13 0 2 7 152}	SEQUENCE	c8		o.1		o.1		–		–		o.1		
39	“CCITT Rec. X.721 (1992) | ISO/IEC 10165-2:1992”: objectClass	{2 9 3 2 7 65}	ObjectClass	c8		o.1		–		–		–		–		
40	“CCITT Rec. X.721 (1992) | ISO/IEC 10165-2:1992”: octetsReceivedCounter	{2 9 3 2 7 78}	INTEGER	–		o.1		–		–		–		–		
41	“CCITT Rec. X.721 (1992) | ISO/IEC 10165-2:1992”: octetsSentCounter	{2 9 3 2 7 80}	INTEGER	–		o.1		–		–		–		–		
42	oneWayLogicalChannelIncoming	{2 13 0 2 7 156}	BOOLEAN	c8		o.1		o.1		–		–		o.1		

Copyright International Organization for Standardization
Provided by IHS under license with ISO
No reproduction or networking permitted without license from IHS
Not for Resale

Table E.14 *(concluded)*

				Set by create		Get		Replace		Add		Remove		Set to default		
Index	Attribute template label	Value of object identifier for attribute	Constraints and values	Status	Support	Status	Support	Status	Support	Status	Support	Status	Support	Status	Support	Additional information
43	oneWayLogicalChannelOutgoing	{2 13 0 2 7 157}	BOOLEAN	c8		o.1		o.1		–		–		o.1		
44	onlineFacilityRegistration	{2 13 0 2 7 158}	BOOLEAN	c8		o.1		o.1		–		–		o.1		
45	"CCITT Rec. X.721 (1992) | ISO/IEC 10165-2:1992": operationalState	{2 9 3 2 7 35}	ENUMERATED	–		o.1		–		–		–		–		
46	outgoingCallBarredWithinCUG	{2 13 0 2 7 160}	BOOLEAN	c8		o.1		o.1		–		–		o.1		
47	outgoingCallsBarred	{2 13 0 2 7 159}	BOOLEAN	c8		o.1		o.1		–		–		o.1		
48	"CCITT Rec. X.721 (1992) | ISO/IEC 10165-2:1992": packages	{2 9 3 2 7 66}	SET OF OBJECT IDENTIFIER	c8		o.1		–		–		–		–		
49	packetRetransmission	{2 13 0 2 7 161}	BOOLEAN	c8		o.1		o.1		–		–		o.1		
50	protocolVersionSupported	{2 13 0 2 7 38}	ENUMERATED	–		o.1		–		–		–		–		
51	providerInitiatedDisconnects	{2 13 0 2 7 54}	INTEGER	–		o.1		–		–		–		–		
52	providerInitiatedResets	{2 13 0 2 7 59}	INTEGER	–		o.1		–		–		–		–		
53	rOASubscription	{2 13 0 2 7 167}	BOOLEAN	c8		o.1		o.1		–		–		o.1		
54	remotelyInitiatedResets	{2 13 0 2 7 57}	INTEGER	–		o.1		–		–		–		–		
55	remotelyInitiatedRestarts	{2 13 0 2 7 61}	INTEGER	–		o.1		–		–		–		–		
56	resetIndication	{2 13 0 2 7 163}	INTEGER	c8		o.1		o.1		–		–		–		
57	resetTimeouts	{2 13 0 2 7 60}	INTEGER	–		o.1		–		–		–		–		
58	restartIndication	{2 13 0 2 7 164}	INTEGER	c8		o.1		o.1		–		–		–		
59	reverseChargingAcceptance	{2 13 0 2 7 165}	BOOLEAN	c8		o.1		o.1		–		–		o.1		
60	sN-SAP	{2 13 0 2 7 18}	ObjectInstance	–		o.1		–		–		–		–		
61	sN-ServiceProvider	{2 13 0 2 7 19}	ObjectInstance	c8		o.1		o.1		–		–		o.1		
62	throughputClassNegotiation	{2 13 0 2 7 168}	BOOLEAN	c8		o.1		o.1		–		–		o.1		
63	x25PLEId	{2 13 0 2 7 36}	GraphicString	c8		o.1		–		–		–		–		
64	x25PLEMode	{2 13 0 2 7 120}	ENUMERATED	c8		o.1		o.1		–		–		–		
65	x25SegmentsReceived	{2 13 0 2 7 171}	INTEGER	–		o.1		–		–		–		–		
66	x25SegmentsSent	{2 13 0 2 7 170}	INTEGER	–		o.1		–		–		–		–		
c8: if E.39/1a then o.1 else –																

Copyright International Organization for Standardization
Provided by IHS under license with ISO
No reproduction or networking permitted without license from IHS
Not for Resale

E.4.1.15 The X25 PLE-DTE managed object

See Table E.15.

Table E.15 – x25PLE-DTE Attribute support

				Set by create		Get		Replace		Add		Remove		Set to default		
Index	Attribute template label	Value of object identifier for attribute	Constraints and values	Status	Support	Status	Support	Status	Support	Status	Support	Status	Support	Status	Support	Additional information
1	"CCITT Rec. X.721 (1992) | ISO/IEC 10165-2:1992": administrativeState	{2 9 3 2 7 31}	ENUMERATED	c9		o.1		o.1		–		–		–		
2	"CCITT Rec. X.721 (1992) | ISO/IEC 10165-2:1992": allomorphs	{2 9 3 2 7 50}	SET OF ObjectClass	c9		o.1		–		–		–		–		
3	callAttempts	{2 13 0 2 7 52}	INTEGER	–		o.1		–		–		–		–		
4	callDeflectionSubscription	{2 13 0 2 7 114}	BOOLEAN	c9		o.1		o.1		–		–		o.1		
5	callEstablishmentRetryCo untsExceeded	{2 13 0 2 7 65}	INTEGER	–		o.1		–		–		–		–		
6	callRequestResponseTimer	{2 13 0 2 7 77}	INTEGER	c9		o.1		o.1		–		–		o.1		
7	callTimeouts	{2 13 0 2 7 55}	INTEGER	–		o.1		–		–		–		–		
8	callsConnected	{2 13 0 2 7 53}	INTEGER	–		o.1		–		–		–		–		
9	clearCountsExceeded	{2 13 0 2 7 66}	INTEGER	–		o.1		–		–		–		–		
10	clearRequestResponseTimer	{2 13 0 2 7 79}	INTEGER	c9		o.1		o.1		–		–		o.1		
11	clearRequestRetransmis sion Count	{2 13 0 2 7 81}	INTEGER	c9		o.1		o.1		–		–		o.1		
12	clearTimeouts	{2 13 0 2 7 56}	INTEGER	–		o.1		–		–		–		–		
13	dataPacketRetransmissionCo unt	{2 13 0 2 7 85}	INTEGER	c9		o.1		o.1		–		–		o.1		
14	dataPacketsReceived	{2 13 0 2 7 51}	INTEGER	–		o.1		–		–		–		–		
15	dataPacketsSent	{2 13 0 2 7 50}	INTEGER	–		o.1		–		–		–		–		
16	dataRetransmissionTimerEx piries	{2 13 0 2 7 58}	INTEGER	–		o.1		–		–		–		–		
17	defaultPacketSizes	{2 13 0 2 7 103}	SEQUENCE	c9		o.1		o.1		–		–		o.1		
18	defaultThroughputClasses	{2 13 0 2 7 112}	SEQUENCE	c9		o.1		o.1		–		–		o.1		
19	defaultWindowSizes	{2 13 0 2 7 104}	SEQUENCE	c9		o.1		o.1		–		–		o.1		
20	extendedPacketSequenceNu mbering	{2 13 0 2 7 49}	INTEGER	c9		o.1		o.1		–		–		o.1		

--`,,```,,,,````-`-`,,`,,`,`,,`---

Copyright International Organization for Standardization
Provided by IHS under license with ISO
No reproduction or networking permitted without license from IHS
Not for Resale

Table E.15 *(continued)*

				Set by create		Get		Replace		Add		Remove		Set to default		
Index	Attribute template label	Value of object identifier for attribute	Constraints and values	Status	Support	Status	Support	Status	Support	Status	Support	Status	Support	Status	Support	Additional information
21	flowControlParameterNegotiation	{2 13 0 2 7 119}	BOOLEAN	c9		o.1		o.1		–		–		o.1		
22	interruptResponseTimer	{2 13 0 2 7 82}	INTEGER	c9		o.1		o.1		–		–		o.1		
23	localDTEAddress	{2 13 0 2 7 39}	SEQUENCE	c9		o.1		o.1		–		–		o.1		
24	logicalChannelAssignments	{2 13 0 2 7 48}	SEQUENCE	c9		o.1		o.1		–		–		–		
25	maxActiveCircuits	{2 13 0 2 7 41}	CHOICE	c9		o.1		o.1		–		–		o.1		
26	minimumRecallTimer	{2 13 0 2 7 43}	INTEGER	c9		o.1		o.1		–		–		o.1		
27	“CCITT Rec. X.721 (1992) | ISO/IEC 10165-2:1992”: nameBinding	{2 9 3 2 7 63}	OBJECT IDENTIFIER	c9		o.1		–		–		–		–		
28	“CCITT Rec. X.721 (1992) | ISO/IEC 10165-2:1992”: objectClass	{2 9 3 2 7 65}	ObjectClass	c9		o.1		–		–		–		–		
29	“CCITT Rec. X.721 (1992) | ISO/IEC 10165-2:1992”: octetsReceivedCounter	{2 9 3 2 7 78}	INTEGER	–		o.1		–		–		–		–		
30	“CCITT Rec. X.721 (1992) | ISO/IEC 10165-2:1992”: octetsSentCounter	{2 9 3 2 7 80}	INTEGER	–		o.1		–		–		–		–		
31	“CCITT Rec. X.721 (1992) | ISO/IEC 10165-2:1992”: operationalState	{2 9 3 2 7 35}	ENUMERATED	–		o.1		–		–		–		–		
32	“CCITT Rec. X.721 (1992) | ISO/IEC 10165-2:1992”: packages	{2 9 3 2 7 66}	SET OF OBJECT IDENTIFIER	c9		o.1		–		–		–		–		
33	protocolErrorsAccusedOf	{2 13 0 2 7 64}	INTEGER	–		o.1		–		–		–		–		
34	protocolErrorsDetectedLocally	{2 13 0 2 7 63}	INTEGER	–		o.1		–		–		–		–		
35	protocolVersionSupported	{2 13 0 2 7 38}	ENUMERATED	–		o.1		–		–		–		–		
36	providerInitiatedDisconnects	{2 13 0 2 7 54}	INTEGER	–		o.1		–		–		–		–		
37	providerInitiatedResets	{2 13 0 2 7 59}	INTEGER	–		o.1		–		–		–		–		
38	registrationPermitted	{2 13 0 2 7 105}	BOOLEAN	c9		o.1		o.1		–		–		o.1		
39	registrationRequestResponseTimer	{2 13 0 2 7 44}	INTEGER	c9		o.1		o.1		–		–		o.1		

Copyright International Organization for Standardization
Provided by IHS under license with ISO
No reproduction or networking permitted without license from IHS
Not for Resale

Table E.15 *(concluded)*

				Set by create		Get		Replace		Add		Remove		Set to default		
Index	Attribute template label	Value of object identifier for attribute	Constraints and values	Status	Support	Status	Support	Status	Support	Status	Support	Status	Support	Status	Support	Additional information
40	registrationRequestRetransmissionCount	{2 13 0 2 7 46}	INTEGER	c9		o.1		o.1		–		–		o.1		
41	rejectResponseTimer	{2 13 0 2 7 86}	INTEGER	c9		o.1		o.1		–		–		o.1		
42	rejectRetransmissionCount	{2 13 0 2 7 87}	INTEGER	c9		o.1		o.1		–		–		o.1		
43	remotelyInitiatedResets	{2 13 0 2 7 57}	INTEGER	–		o.1		–		–		–		–		
44	remotelyInitiatedRestarts	{2 13 0 2 7 61}	INTEGER	–		o.1		–		–		–		–		
45	resetRequestResponseTimer	{2 13 0 2 7 78}	INTEGER	c9		o.1		o.1		–		–		o.1		
46	resetRequestRetransmissionCount	{2 13 0 2 7 80}	INTEGER	c9		o.1		o.1		–		–		o.1		
47	resetTimeouts	{2 13 0 2 7 60}	INTEGER	–		o.1		–		–		–		–		
48	restartCountsExceeded	{2 13 0 2 7 62}	INTEGER	–		o.1		–		–		–		–		
49	restartRequestResponseTimer	{2 13 0 2 7 42}	INTEGER	c9		o.1		o.1		–		–		o.1		
50	restartRequestRetransmissionCount	{2 13 0 2 7 45}	INTEGER	c9		o.1		o.1		–		–		o.1		
51	sN-SAP	{2 13 0 2 7 18}	ObjectInstance	–		o.1		–		–		–		–		
52	sN-ServiceProvider	{2 13 0 2 7 19}	ObjectInstance	c9		o.1		o.1		–		–		o.1		
53	throughputClassNegotiation	{2 13 0 2 7 168}	BOOLEAN	c9		o.1		o.1		–		–		o.1		
54	windowRotationTimer	{2 13 0 2 7 84}	INTEGER	c9		o.1		o.1		–		–		o.1		
55	windowStatusTransmissionTimer	{2 13 0 2 7 83}	INTEGER	c9		o.1		o.1		–		–		o.1		
56	x25PLEId	{2 13 0 2 7 36}	GraphicString	c9		o.1		–		–		–		–		
57	x25PLEMode	{2 13 0 2 7 120}	ENUMERATED	c9		o.1		o.1		–		–		–		
c9: if E.40/1a then o.1 else –																

Copyright International Organization for Standardization
Provided by IHS under license with ISO
No reproduction or networking permitted without license from IHS
Not for Resale

E.4.1.16 The X25 PLE-DCE initial values managed object

See Table E.16.

Table E.16 – x25PLEIVMO-DCE Attribute support

				Set by create		Get		Replace		Add		Remove		Set to default		
Index	Attribute template label	Value of object identifier for attribute	Constraints and values	Status	Support	Status	Support	Status	Support	Status	Support	Status	Support	Status	Support	Additional information
1	"CCITT Rec. X.721 (1992) | ISO/IEC 10165-2:1992": allomorphs	{2 9 3 2 7 50}	SET OF ObjectClass	o.1		o.1		–		–		–		–		
2	defaultPacketSizes	{2 13 0 2 7 103}	SEQUENCE	o.1		o.1		o.1		–		–		o.1		
3	defaultThroughputClasses	{2 13 0 2 7 112}	SEQUENCE	o.1		o.1		o.1		–		–		o.1		
4	defaultWindowSizes	{2 13 0 2 7 104}	SEQUENCE	o.1		o.1		o.1		–		–		o.1		
5	flowControlParameterNegotiation	{2 13 0 2 7 119}	BOOLEAN	o.1		o.1		o.1		–		–		o.1		
6	localDTEAddress	{2 13 0 2 7 39}	SEQUENCE	o.1		o.1		o.1		–		–		–		
7	logicalChannelAssignments	{2 13 0 2 7 48}	SEQUENCE	o.1		o.1		o.1		–		–		–		
8	"CCITT Rec. X.721 (1992) | ISO/IEC 10165-2:1992": nameBinding	{2 9 3 2 7 63}	OBJECT IDENTIFIER	o.1		o.1		–		–		–		–		
9	"CCITT Rec. X.721 (1992) | ISO/IEC 10165-2:1992": objectClass	{2 9 3 2 7 65}	ObjectClass	o.1		o.1		–		–		–		–		
10	"CCITT Rec. X.721 (1992) | ISO/IEC 10165-2:1992": packages	{2 9 3 2 7 66}	SET OF OBJECT IDENTIFIER	o.1		o.1		–		–		–		–		
11	sN-ServiceProvider	{2 13 0 2 7 19}	ObjectInstance	o.1		o.1		o.1		–		–		–		
12	throughputClassNegotiation	{2 13 0 2 7 168}	BOOLEAN	o.1		o.1		o.1		–		–		o.1		
13	x25PLEIVMOId	{2 13 0 2 7 37}	GraphicString	o.1		o.1		–		–		–		–		
14	x25PLEMode	{2 13 0 2 7 120}	ENUMERATED	o.1		o.1		o.1		–		–		–		

Copyright International Organization for Standardization
Provided by IHS under license with ISO
No reproduction or networking permitted without license from IHS
Not for Resale

E.4.1.17 The X25 PLE-DTE initial values managed object

See Table E.17.

Table E.17 – x25PLEIVMO-DTE Attribute support

				Set by create		Get		Replace		Add		Remove		Set to default		
Index	Attribute template label	Value of object identifier for attribute	Constraints and values	Status	Support	Status	Support	Status	Support	Status	Support	Status	Support	Status	Support	Additional information
1	"CCITT Rec. X.721 (1992) | ISO/IEC 10165-2:1992": allomorphs	{2 9 3 2 7 50}	SET OF ObjectClass	o.1		o.1		–		–		–		–		
2	callDeflectionSubscription	{2 13 0 2 7 114}	BOOLEAN	o.1		o.1		o.1		–		–		o.1		
3	callRequestResponseTimer	{2 13 0 2 7 77}	INTEGER	o.1		o.1		o.1		–		–		o.1		
4	clearRequestResponseTimer	{2 13 0 2 7 79}	INTEGER	o.1		o.1		o.1		–		–		o.1		
5	clearRequestRetransmissionCount	{2 13 0 2 7 81}	INTEGER	o.1		o.1		o.1		–		–		o.1		
6	dataPacketRetransmissionCount	{2 13 0 2 7 85}	INTEGER	o.1		o.1		o.1		–		–		o.1		
7	defaultPacketSizes	{2 13 0 2 7 103}	SEQUENCE	o.1		o.1		o.1		–		–		o.1		
8	defaultThroughputClasses	{2 13 0 2 7 112}	SEQUENCE	o.1		o.1		o.1		–		–		o.1		
9	defaultWindowSizes	{2 13 0 2 7 104}	SEQUENCE	o.1		o.1		o.1		–		–		o.1		
10	extendedPacketSequenceNumbering	{2 13 0 2 7 49}	INTEGER	o.1		o.1		o.1		–		–		o.1		
11	flowControlParameterNegotiation	{2 13 0 2 7 119}	BOOLEAN	o.1		o.1		o.1		–		–		o.1		
12	interruptResponseTimer	{2 13 0 2 7 82}	INTEGER	o.1		o.1		o.1		–		–		o.1		
13	localDTEAddress	{2 13 0 2 7 39}	SEQUENCE	o.1		o.1		o.1		–		–		–		
14	logicalChannelAssignments	{2 13 0 2 7 48}	SEQUENCE	o.1		o.1		o.1		–		–		–		
15	maxActiveCircuits	{2 13 0 2 7 41}	CHOICE	o.1		o.1		o.1		–		–		o.1		
16	minimumRecallTimer	{2 13 0 2 7 43}	INTEGER	o.1		o.1		o.1		–		–		o.1		
17	"CCITT Rec. X.721 (1992) | ISO/IEC 10165-2:1992": nameBinding	{2 9 3 2 7 63}	OBJECT IDENTIFIER	o.1		o.1		–		–		–		–		
18	"CCITT Rec. X.721 (1992) | ISO/IEC 10165-2:1992": objectClass	{2 9 3 2 7 65}	ObjectClass	o.1		o.1		–		–		–		–		

Copyright International Organization for Standardization
Provided by IHS under license with ISO
No reproduction or networking permitted without license from IHS
Not for Resale

Table E.17 *(concluded)*

				Set by create		Get		Replace		Add		Remove		Set to default		
Index	Attribute template label	Value of object identifier for attribute	Constraints and values	Status	Support	Status	Support	Status	Support	Status	Support	Status	Support	Status	Support	Additional information
19	"CCITT Rec. X.721 (1992) | ISO/IEC 10165-2:1992": packages	{2 9 3 2 7 66}	SET OF OBJECT IDENTIFIER	o.1		o.1		–		–		–		–		
20	registrationPermitted	{2 13 0 2 7 105}	BOOLEAN	o.1		o.1		o.1		–		–		o.1		
21	registrationRequestResponseTimer	{2 13 0 2 7 44}	INTEGER	o.1		o.1		o.1		–		–		o.1		
22	registrationRequestRetransmissionCount	{2 13 0 2 7 46}	INTEGER	o.1		o.1		o.1		–		–		o.1		
23	rejectResponseTimer	{2 13 0 2 7 86}	INTEGER	o.1		o.1		o.1		–		–		o.1		
24	rejectRetransmissionCount	{2 13 0 2 7 87}	INTEGER	o.1		o.1		o.1		–		–		o.1		
25	resetRequestResponseTimer	{2 13 0 2 7 78}	INTEGER	o.1		o.1		o.1		–		–		o.1		
26	resetRequestRetransmissionCount	{2 13 0 2 7 80}	INTEGER	o.1		o.1		o.1		–		–		o.1		
27	restartRequestResponseTimer	{2 13 0 2 7 42}	INTEGER	o.1		o.1		o.1		–		–		o.1		
28	restartRequestRetransmissionCount	{2 13 0 2 7 45}	INTEGER	o.1		o.1		o.1		–		–		o.1		
29	sN-ServiceProvider	{2 13 0 2 7 19}	ObjectInstance	o.1		o.1		o.1		–		–		–		
30	throughputClassNegotiation	{2 13 0 2 7 168}	BOOLEAN	o.1		o.1		o.1		–		–		o.1		
31	windowRotationTimer	{2 13 0 2 7 84}	INTEGER	o.1		o.1		o.1		–		–		o.1		
32	windowStatusTransmissionTimer	{2 13 0 2 7 83}	INTEGER	o.1		o.1		o.1		–		–		o.1		
33	x25PLEIVMOId	{2 13 0 2 7 37}	GraphicString	o.1		o.1		–		–		–		–		
34	x25PLEMode	{2 13 0 2 7 120}	ENUMERATED	o.1		o.1		o.1		–		–		–		

E.4.2 Attribute groups

The specifier of a manager role implementation that claims to support management operations on the attribute groups specified in this Recommendation | International Standard shall import a copy of Tables E.18 through E.27 and complete them.

E.4.2.1 The CLNS managed object

See Table E.18.

Table E.18 – cLNS Attribute group support

				Get		Set to default		
Index	Attribute group template label	Value of object identifier for attribute group	Constraints and values	Status	Support	Status	Support	Additional information
1	"ITU-T Rec. X.723 (1993) | ISO/IEC 10165-5:1994": counters	{2 9 3 5 8 0}		o.1		–		
2	"CCITT Rec. X.721 (1992) | ISO/IEC 10165-2:1992": state	{2 9 3 2 8 1}		o.1		–		

E.4.2.2 The CONS managed object

See Table E.19.

Table E.19 – cONS Attribute group support

				Get		Set to default		
Index	Attribute group template label	Value of object identifier for attribute group	Constraints and values	Status	Support	Status	Support	Additional information
1	"CCITT Rec. X.721 (1992) | ISO/IEC 10165-2:1992": state	{2 9 3 2 8 1}		o.1		–		

E.4.2.3 The Recommendation D-Series counts managed object

See Table E.20.

Table E.20 – dSeriesCounts Attribute group support

				Get		Set to default		
Index	Attribute group template label	Value of object identifier for attribute group	Constraints and values	Status	Support	Status	Support	Additional information
1	"ITU-T Rec. X.723 (1993) | ISO/IEC 10165-5:1994": counters	{2 9 3 5 8 0}		o.1		–		

Copyright International Organization for Standardization
Provided by IHS under license with ISO
No reproduction or networking permitted without license from IHS
Not for Resale

E.4.2.4 The linkage managed object

See Table E.21.

Table E.21 – linkage Attribute group support

				Get		Set to default		
Index	Attribute group template label	Value of object identifier for attribute group	Constraints and values	Status	Support	Status	Support	Additional information
1	"ITU-T Rec. X.723 (1993) | ISO/IEC 10165-5:1994": counters	{2 9 3 5 8 0}		o.1		–		
2	"CCITT Rec. X.721 (1992) | ISO/IEC 10165-2:1992": state	{2 9 3 2 8 1}		o.1		–		

E.4.2.5 The permanent virtual circuit-DCE managed object

See Table E.22.

Table E.22 – permanentVirtualCircuit-DCE Attribute group support

				Get		Set to default		
Index	Attribute group template label	Value of object identifier for attribute group	Constraints and values	Status	Support	Status	Support	Additional information
1	"ITU-T Rec. X.723 (1993) | ISO/IEC 10165-5:1994": counters	{2 9 3 5 8 0}		o.1		–		
2	"CCITT Rec. X.721 (1992) | ISO/IEC 10165-2:1992": state	{2 9 3 2 8 1}		o.1		–		

E.4.2.6 The permanent virtual circuit-DTE managed object

See Table E.23.

Table E.23 – permanentVirtualCircuit-DTE Attribute group support

				Get		Set to default		
Index	Attribute group template label	Value of object identifier for attribute group	Constraints and values	Status	Support	Status	Support	Additional information
1	"ITU-T Rec. X.723 (1993) | ISO/IEC 10165-5:1994": counters	{2 9 3 5 8 0}		o.1		–		

Copyright International Organization for Standardization
Provided by IHS under license with ISO
No reproduction or networking permitted without license from IHS
Not for Resale

E.4.2.7 The virtual call-DCE managed object

See Table E.24.

Table E.24 – virtualCall-DCE Attribute group support

				Get		Set to default		
Index	Attribute group template label	Value of object identifier for attribute group	Constraints and values	Status	Support	Status	Support	Additional information
1	"ITU-T Rec. X.723 (1993) | ISO/IEC 10165-5:1994": counters	{2 9 3 5 8 0}		o.1		–		

E.4.2.8 The virtual call-DTE managed object

See Table E.25.

Table E.25 – virtualCall-DTE Attribute group support

				Get		Set to default		
Index	Attribute group template label	Value of object identifier for attribute group	Constraints and values	Status	Support	Status	Support	Additional information
1	"ITU-T Rec. X.723 (1993) | ISO/IEC 10165-5:1994": counters	{2 9 3 5 8 0}		o.1		–		

E.4.2.9 The X25 PLE-DCE managed object

See Table E.26.

Table E.26 – x25PLE-DCE Attribute group support

				Get		Set to default		
Index	Attribute group template label	Value of object identifier for attribute group	Constraints and values	Status	Support	Status	Support	Additional information
1	"ITU-T Rec. X.723 (1993) | ISO/IEC 10165-5:1994": counters	{2 9 3 5 8 0}		o.1		–		
2	"ITU-T Rec. X.723 (1993) | ISO/IEC 10165-5:1994": counters	{2 9 3 5 8 0}		o.1		–		
3	"CCITT Rec. X.721 (1992) | ISO/IEC 10165-2:1992": state	{2 9 3 2 8 1}		o.1		–		

--`,,```,,,,````-`-`,,`,,`,`,,`---

Copyright International Organization for Standardization
Provided by IHS under license with ISO
No reproduction or networking permitted without license from IHS

Not for Resale

E.4.2.10 The X25 PLE-DTE managed object

See Table E.27.

Table E.27 – x25PLE-DTE Attribute group support

				Get		Set to default		
Index	Attribute group template label	Value of object identifier for attribute group	Constraints and values	Status	Support	Status	Support	Additional information
1	"ITU-T Rec. X.723 (1993) | ISO/IEC 10165-5:1994": counters	{2 9 3 5 8 0}		o.1		–		
2	"ITU-T Rec. X.723 (1993) | ISO/IEC 10165-5:1994": counters	{2 9 3 5 8 0}		o.1		–		
3	"CCITT Rec. X.721 (1992) | ISO/IEC 10165-2:1992": state	{2 9 3 2 8 1}		o.1		–		

E.4.3 Create and delete management operations

The specifier of a manager role implementation that claims to support the create or delete management operations on the managed objects specified in this Recommendation | International Standard shall import a copy of Tables E.28 through E.42 and complete them.

E.4.3.1 The CLNS managed object

See Table E.28.

Table E.28 – cLNS create and delete support

Index	Operation	Constraints and values	Status	Support	Additional information
1	Create support	cLNS MO	o		
1.1	Create with reference object	–	–		
2	Delete support	cLNS MO	o		

E.4.3.2 The CONS managed object

See Table E.29.

Table E.29 – cONS create and delete support

Index	Operation	Constraints and values	Status	Support	Additional information
1	Create support	cONS MO	o		
1.1	Create with reference object	–	–		
2	Delete support	cONS MO	o		

Copyright International Organization for Standardization
Provided by IHS under license with ISO
No reproduction or networking permitted without license from IHS
Not for Resale

E.4.3.3 The Recommendation D-Series counts managed object

See Table E.30.

Table E.30 – dSeriesCounts create and delete support

Index	Operation	Constraints and values	Status	Support	Additional information
1	Create support	dSeriesCounts MO	o		
1.1	Create with reference object	–	–		
2	Delete support	dSeriesCounts MO	o.1		

E.4.3.4 The linkage managed object

See Table E.31.

Table E.31– linkage create and delete support

Index	Operation	Constraints and values	Status	Support	Additional information
1	Create support	linkage MO	o		
1.1	Create with reference object	–	o		
2	Delete support	linkage MO	o		

E.4.3.5 The NSAP managed object

See Table E.32.

Table E.32 –nSAP create and delete support

Index	Operation	Constraints and values	Status	Support	Additional information
1	Create support	nSAP MO	o		
1.1	Create with reference object	–	–		
2	Delete support	nSAP MO	o		

E.4.3.6 The network connection managed object

See Table E.33.

Table E.33 – networkConnection create and delete support

Index	Operation	Constraints and values	Status	Support	Additional information
1	Create support	networkConnection MO	–		
1.1	Create with reference object	–	–		
2	Delete support	networkConnection MO	o		

Copyright International Organization for Standardization
Provided by IHS under license with ISO
No reproduction or networking permitted without license from IHS
Not for Resale

E.4.3.7 The network entity managed object

See Table E.34.

Table E.34 – networkEntity create and delete support

Index	Operation	Constraints and values	Status	Support	Additional information
1	Create support	networkEntity MO	o		
1.1	Create with reference object	–	–		
2	Delete support	networkEntity MO	o		

E.4.3.8 The permanent virtual circuit-DCE managed object

See Table E.35.

Table E.35 – permanentVirtualCircuit-DCE create and delete support

Index	Operation	Constraints and values	Status	Support	Additional information
1	Create support	permanentVirtualCircuit-DCE MO	o.1		
1.1	Create with reference object	–	–		
2	Delete support	permanentVirtualCircuit-DCE MO	o.1		

E.4.3.9 The permanent virtual circuit-DTE managed object

See Table E.36.

Table E.36 – permanentVirtualCircuit-DTE create and delete support

Index	Operation	Constraints and values	Status	Support	Additional information
1	Create support	permanentVirtualCircuit-DTE MO	o.1		
1.1	Create with reference object	–	–		
2	Delete support	permanentVirtualCircuit-DTE MO	o.1		

E.4.3.10 The virtual call-DCE managed object

See Table E.37.

Table E.37 – virtualCall-DCE create and delete support

Index	Operation	Constraints and values	Status	Support	Additional information
1	Create support	virtualCall-DCE MO	o		
1.1	Create with reference object	–	–		
2	Delete support	virtualCall-DCE MO	o.1		

Copyright International Organization for Standardization
Provided by IHS under license with ISO
No reproduction or networking permitted without license from IHS
Not for Resale

E.4.3.11 The virtual call initial values managed object

See Table E.38.

Table E.38 – virtualCallIVMO create and delete support

Index	Operation	Constraints and values	Status	Support	Additional information
1	Create support	virtualCallIVMO MO	o.1		
1.1	Create with reference object	–	–		
2	Delete support	virtualCallIVMO MO	o.1		

E.4.3.12 The X25 PLE-DCE managed object

See Table E.39.

Table E.39 – x25PLE-DCE create and delete support

Index	Operation	Constraints and values	Status	Support	Additional information
1	Create support	x25PLE-DCE MO	o		
1.1	Create with reference object	–	o		
2	Delete support	x25PLE-DCE MO	o.1		

E.4.3.13 The X25 PLE-DTE managed object

See Table E.40.

Table E.40 – x25PLE-DTE create and delete support

Index	Operation	Constraints and values	Status	Support	Additional information
1	Create support	x25PLE-DTE MO	o		
1.1	Create with reference object	–	o		
2	Delete support	x25PLE-DTE MO	o.1		

E.4.3.14 The X25 PLE-DCE initial values managed object

See Table E.41.

Table E.41 – x25PLEIVMO-DCE create and delete support

Index	Operation	Constraints and values	Status	Support	Additional information
1	Create support	x25PLEIVMO-DCE MO	o.1		
1.1	Create with reference object	–	o.1		
2	Delete support	x25PLEIVMO-DCE MO	o.1		

E.4.3.15 The X25 PLE-DTE initial values managed object

See Table E.42.

Table E.42 – x25PLEIVMO-DTE create and delete support

Index	Operation	Constraints and values	Status	Support	Additional information
1	Create support	x25PLEIVMO-DTE MO	o.1		
1.1	Create with reference object	–	o.1		
2	Delete support	x25PLEIVMO-DTE MO	o.1		

Copyright International Organization for Standardization
Provided by IHS under license with ISO
No reproduction or networking permitted without license from IHS
Not for Resale

Copyright International Organization for Standardization
Provided by IHS under license with ISO
No reproduction or networking permitted without license from IHS
Not for Resale

E.4.4 Notifications

The specifier of a manager role implementation that claims to support the notifications specified in this Recommendation | International Standard shall import a copy of Table E.43 and complete it.

Table E.43 – Notification support

					Support									
Index	Notification type templace label	Value of object identifier for notification type	Constraints and values	Status	Con-firmed	Non con-firmed	Additional information	Subindex	Notification field name label	Value of object identifier of attribute type associated with field	Constraints and values	Status	Support	Additional information
1	"CCITT Rec. X.721 (1992) | ISO/IEC 10165-2:1992": communicationsAlarm	{2 9 3 2 10 2}		c10				1.1	AlarmInfo	–	**Information Syntax** SEQUENCE	c10		
								1.1.1	probableCause	{2 9 3 2 7 18}	CHOICE	c:m		
								1.1.1.1	globalValue	–	OBJECT IDENTIFIER	c:m		
								1.1.1.2	localValue	–	INTEGER	c:m		
								1.1.2	specificProblems	{2 9 3 2 7 27}	SET OF CHOICE	c:m		
								1.1.2.1	OBJECT IDENTIFIER	–	OBJECT IDENTIFIER	c:m		
								1.1.2.2	INTEGER	–	INTEGER	c:m		
								1.1.3	perceivedSeverity	{2 9 3 2 7 17}	ENUMERATED	c:m		
								1.1.4	backedUpStatus	{2 9 3 2 7 11}	BOOLEAN	c:m		
								1.1.5	backUpObject	{2 9 3 2 7 40}	ObjectInstance	c:m		
								1.1.6	trendIndication	{2 9 3 2 7 30}	ENUMERATED	c:m		
								1.1.7	thresholdInfo	{2 9 3 2 7 29}	SEQUENCE	c:m		
								1.1.7.1	triggeredThreshold	–	AttributeId	c:m		
								1.1.7.2	observedValue	–	CHOICE	c:m		
								1.1.7.2.1	integer	–	INTEGER	c:m		
								1.1.7.2.2	real	–	REAL	c:m		
								1.1.7.3	thresholdLevel	–	CHOICE	c:m		
								1.1.7.3.1	up	–	SEQUENCE	c:m		

Copyright International Organization for Standardization
Provided by IHS under license with ISO
No reproduction or networking permitted without license from IHS
Not for Resale

Table E.43 *(continued)*

Index	Notification type templace label	Value of object identifier for notification type	Constraints and values	Status	Support		Additional information	Subindex	Notification field name label	Value of object identifier of attribute type associated with field	Constraints and values	Status	Support	Additional information
					Con-firmed	Non con-firmed								
								1.1.7.3.1.1	high	–	CHOICE	c:m		
								1.1.7.3.1.1.1	integer	–	INTEGER	c:m		
								1.1.7.3.1.1.2	real	–	REAL	c:m		
								1.1.7.3.1.2	low	–	CHOICE	c:m		
								1.1.7.3.1.2.1	integer	–	INTEGER	c:m		
								1.1.7.3.1.2.2	real	–	REAL	c:m		
								1.1.7.3.2	down	–	SEQUENCE	c:m		
								1.1.7.3.2.1	high	–	CHOICE	c:m		
								1.1.7.3.2.1.1	integer	–	INTEGER	c:m		
								1.1.7.3.2.1.2	real	–	REAL	c:m		
								1.1.7.3.2.2	low	–	CHOICE	c:m		
								1.1.7.3.2.2.1	integer	–	INTEGER	c:m		
								1.1.7.3.2.2.2	real	–	REAL	c:m		
								1.1.7.4	armTime	–	GeneralizedTime	c:m		
								1.1.8	notificationIdentifier	{2 9 3 2 7 16}	INTEGER	c:m		
								1.1.9	correlatedNotifications	{2 9 3 2 7 12}	SET OF SEQUENCE	c:m		
								1.1.9.1	correlatedNotifications	{2 9 3 2 7 12}	SET OF INTEGER	c:m		
								1.1.9.2	sourceObjectInst	–	ObjectInstance	c:m		
								1.1.10	stateChangeDefinition	{2 9 3 2 7 28}	SET OF SEQUENCE	c:m		
								1.1.10.1	attributeID	–	AttributeId	c:m		
								1.1.10.2	oldAttributeValue	–	ANY DEFINED BY attributeID	c:m		
								1.1.10.3	newAttributeValue	–	ANY DEFINED BY attributeID	c:m		
								1.1.11	monitoredAttributes	{2 9 3 2 7 15}	SET OF Attribute	c:m		
								1.1.12	proposedRepair Actions	{2 9 3 2 7 19}	SET OF CHOICE	c:m		
								1.1.12.1	OBJECT IDENTIFIER	–	OBJECT IDENTIFIER	c:m		
								1.1.12.2	INTEGER	–	INTEGER	c:m		

Copyright International Organization for Standardization
Provided by IHS under license with ISO
No reproduction or networking permitted without license from IHS
Not for Resale

Table E.43 *(continued)*

					Support									
Index	Notification type templace label	Value of object identifier for notification type	Constraints and values	Status	Con-firmed	Non con-firmed	Additional information	Subindex	Notification field name label	Value of object identifier of attribute type associated with field	Constraints and values	Status	Support	Additional information
								1.1.13	additionalText	{2 9 3 2 7 7}	GraphicString	c:m		
								1.1.14	additionalInformation	{2 9 3 2 7 6}	SET OF SEQUENCE	c:m		
								1.1.14.1	identifier	–	OBJECT IDENTIFIER	c:m		
								1.1.14.2	significance	–	BOOLEAN	c:m		
								1.1.14.3	information	–	ANY DEFINED BY identifier	c:m		
2	"CCITT Rec. X.721 (1992) | ISO/IEC 10165-2:1992": objectCreation	{2 9 3 2 10 6}		c11				2.1	ObjectInfo	–	**Information Syntax** SEQUENCE	c11		
								2.1.1	sourceIndicator	{2 9 3 2 7 26}	ENUMERATED	c:m		
								2.1.2	attributeList	{2 9 3 2 7 9}	SET OF Attribute	c:m		
								2.1.3	notificationIdentifier	{2 9 3 2 7 16}	INTEGER	c:m		
								2.1.4	correlatedNotifications	{2 9 3 2 7 12}	SET OF SEQUENCE	c:m		
								2.1.4.1	correlatedNotifications	{2 9 3 2 7 12}	SET OF INTEGER	c:m		
								2.1.4.2	sourceObjectInst	–	ObjectInstance	c:m		
								2.1.5	additionalText	{2 9 3 2 7 7}	GraphicString	c:m		
								2.1.6	additionalInformation	{2 9 3 2 7 6}	SET OF SEQUENCE	c:m		
								2.1.6.1	identifier	–	OBJECT IDENTIFIER	c:m		
								2.1.6.2	significance	–	BOOLEAN	c:m		
								2.1.6.3	information	–	ANY DEFINED BY identifier	c:m		

Copyright International Organization for Standardization
Provided by IHS under license with ISO
No reproduction or networking permitted without license from IHS
Not for Resale

Table E.43 *(continued)*

					Support									
Index	Notification type templace label	Value of object identifier for notification type	Constraints and values	Status	Con-firmed	Non con-firmed	Additional information	Subindex	Notification field name label	Value of object identifier of attribute type associated with field	Constraints and values	Status	Support	Additional information
3	"CCITT Rec. X.721 (1992) | ISO/IEC 10165-2:1992": objectDeletion	{2 9 3 2 10 7}		c12				3.1	ObjectInfo	–	**Information Syntax** SEQUENCE	c12		
								3.1.1	sourceIndicator	{2 9 3 2 7 26}	ENUMERATED	c:m		
								3.1.2	attributeList	{2 9 3 2 7 9}	SET OF Attribute	c:m		
								3.1.3	notificationIdentifier	{2 9 3 2 7 16}	INTEGER	c:m		
								3.1.4	correlatedNotifications	{2 9 3 2 7 12}	SET OF SEQUENCE	c:m		
								3.1.4.1	correlatedNotifications	{2 9 3 2 7 12}	SET OF INTEGER	c:m		
								3.1.4.2	sourceObjectInst	–	ObjectInstance	c:m		
								3.1.5	additionalText	{2 9 3 2 7 7}	GraphicString	c:m		
								3.1.6	additionalInformation	{2 9 3 2 7 6}	SET OF SEQUENCE	c:m		
								3.1.6.1	identifier	–	OBJECT IDENTIFIER	c:m		
								3.1.6.2	significance	–	BOOLEAN	c:m		
								3.1.6.3	information	–	ANY DEFINED BY identifier	c:m		
4	"CCITT Rec. X.721 (1992) | ISO/IEC 10165-2:1992": stateChange	{2 9 3 2 10 14}		c13				4.1	StateChangeInfo	–	**Information Syntax** SEQUENCE	c13		
								4.1.1	sourceIndicator	{2 9 3 2 7 26}	ENUMERATED	c:m		
								4.1.2	attributeIdentifierList	{2 9 3 2 7 8}	SET OF AttributeId	c:m		
								4.1.3	stateChangeDefinition	{2 9 3 2 7 28}	SET OF SEQUENCE	c:m		
								4.1.3.1	attributeID	–	AttributeId	c:m		
								4.1.3.2	oldAttributeValue	–	ANY DEFINED BY attributeID	c:m		

Copyright International Organization for Standardization
Provided by IHS under license with ISO
No reproduction or networking permitted without license from IHS
Not for Resale

Table E.43 *(concluded)*

Index	Notification type templace label	Value of object identifier for notification type	Constraints and values	Status	Support: Con-firmed	Support: Non con-firmed	Additional information	Subindex	Notification field name label	Value of object identifier of attribute type associated with field	Constraints and values	Status	Support	Additional information
								4.1.3.3	newAttributeValue	–	ANY DEFINED BY attributeID	c:m		
								4.1.4	notificationIdentifier	{2 9 3 2 7 16}	INTEGER	c:m		
								4.1.5	correlatedNotifications	{2 9 3 2 7 12}	SET OF SEQUENCE	c:m		
								4.1.5.1	correlatedNotifications	{2 9 3 2 7 12}	SET OF INTEGER	c:m		
								4.1.5.2	sourceObjectInst	–	ObjectInstance	c:m		
								4.1.6	additionalText	{2 9 3 2 7 7}	GraphicString	c:m		
								4.1.7	additionalInformation	{2 9 3 2 7 6}	SET OF SEQUENCE	c:m		
								4.1.7.1	identifier	–	OBJECT IDENTIFIER	c:m		
								4.1.7.2	significance	–	BOOLEAN	c:m		
								4.1.7.3	information	–	ANY DEFINED BY identifier	c:m		
5	"ITU-T Rec. X.723 (1993) | ISO/IEC 10165-5:1994": communicationsInformation	{2 9 3 5 10 0}		c14				5.1	CommunicationsInformation	–	**Information Syntax** SEQUENCE	c14		
								5.1.1	informationType	{2 9 3 5 7 5}	OBJECT IDENTIFIER	c:m		
								5.1.2	informationData	{2 9 3 5 7 4}	SET OF SEQUENCE	c:m		
								5.1.2.1	identifier	–	OBJECT IDENTIFIER	c:m		
								5.1.2.2	significance	–	BOOLEAN	c:m		
								5.1.2.3	information	–	ANY DEFINED BY identifier	c:m		

c10: if D.3/4a or D.3/19a or D.3/53a then m else –
c11: if D.3/6a or D.3/12a or D.3/15a or D.3/21a or D.3/24a or D.3/28a or D.3/30a or D.3/32a or D.3/35a or D.3/38a or D.3/42a or D.3/44a or D.3/48a or D.3/54a or D.3/57a or D.3/59a then m else –
c12: if D.3/7a or D.3/13a or D.3/17a or D.3/22a or D.3/25a or D.3/29a or D.3/31a or D.3/33a or D.3/36a or D.3/39a or D.3/43a or D.3/45a or D.3/49a or D.3/55a or D.3/58a or D.3/60a then m else –
c13: if D.3/8a or D.3/14a or D.3/23a or D.3/34a or D.3/50a or D.3/56a then m else –
c14: if D.3/5a or D.3/20a or D.3/27a or D.3/37a or D.3/41a then m else –

Copyright International Organization for Standardization
Provided by IHS under license with ISO
No reproduction or networking permitted without license from IHS
Not for Resale

E.4.5 Actions

The specifier of a manager role implementation that claims to support the actions specified in this Recommendation | International Standard shall import a copy of Table E.44 and complete it.

Table E.44 – Action support

Index	Action type template label	Value of object identifier for action type	Constraints and values	Status	Support	Additional information	Subindex	Action field name label	Constraints and values	Status	Support	Additional information
1	"ITU-T Rec. X.723 (1993) | ISO/IEC 10165-5:1994": activate	{2 9 3 5 9 0}		c15			1.1	ActionInfo	**Information Syntax** SET OF SEQUENCE	c15		
							1.1.1	identifier	OBJECT IDENTIFIER	c:m		
							1.1.2	significance	BOOLEAN	c:o		
							1.1.3	information	ANY DEFINED BY identifier	c:m		
							1.2	ActionReply	**Reply Syntax** SET OF SEQUENCE	c:m		
							1.2.1	identifier	OBJECT IDENTIFIER	c:m		
							1.2.2	significance	BOOLEAN	c:o		
							1.2.3	information	ANY DEFINED BY identifier	c:m		
2	"ITU-T Rec. X.723 (1993) | ISO/IEC 10165-5:1994": deactivate	{2 9 3 5 9 1}		c16			2.1	ActionInfo	**Information Syntax** SET OF SEQUENCE	c16		
							2.1.1	identifier	OBJECT IDENTIFIER	c:m		
							2.1.2	significance	BOOLEAN	c:o		

--`,,```,,,,````-`-`,,`,,`,`,,`---

Copyright International Organization for Standardization
Provided by IHS under license with ISO
No reproduction or networking permitted without license from IHS
Not for Resale

Table E.44 *(concluded)*

Index	Action type template label	Value of object identifier for action type	Constraints and values	Status	Support	Additional information	Subindex	Action field name label	Constraints and values	Status	Support	Additional information
							2.1.3	information	ANY DEFINED BY identifier	c:m		
							2.2	ActionReply	**Reply Syntax** SET OF SEQUENCE	c:m		
							2.2.1	identifier	OBJECT IDENTIFIER	c:m		
							2.2.2	significance	BOOLEAN	c:o		
							2.2.3	information	ANY DEFINED BY identifier	c:m		
3	"ITU-T Rec. X.723 (1993) | ISO/IEC 10165-5:1994": deactivateWhenNoUsers	{2 9 3 5 9 2}		c17			3.1	ActionInfo	**Information Syntax** SET OF SEQUENCE	c17		
							3.1.1	identifier	OBJECT IDENTIFIER	c:m		
							3.1.2	significance	BOOLEAN	c:o		
							3.1.3	information	ANY DEFINED BY identifier	c:m		
							3.2	ActionReply	**Reply Syntax** SET OF SEQUENCE	c:m		
							3.2.1	identifier	OBJECT IDENTIFIER	c:m		
							3.2.2	significance	BOOLEAN	c:o		
							3.2.3	information	ANY DEFINED BY identifier	c:m		

c15: if D.3/2a or D.3/9a or D.3/17a or D.3/46a or D.3/51 then m else –
c16: if D.3/3a or D.3/10a or D.3/18a or D.3/40a or D.3/47a or D.3/52 then m else –
c17: if D.3/11a then m else –

--`,,```,,,,````-`-`,,`,,`,`,,`---

E.4.6 Parameters

The specifier of a manager role implementation that claims to support the parameters specified in this Recommendation | International Standard shall import a copy of Table E.45 and complete it.

Table E.45 – Parameter support

Index	Parameter template label	Value of object identifier for parameter	Constraints and values	Status	Support	Additional information
1	notificationPDUHeader	{2 13 0 2 5 1}	EVENT-INFO communicationsAlarm	c18		
2	"ISO/IEC 10589:1992": notificationAreaAddress	{2 13 0 1 5 x}	EVENT-INFO communicationsAlarm	c18		
3	"ISO/IEC 10589:1992": notificationIDLength	{2 13 0 1 5 x}	EVENT-INFO communicationsAlarm	c18		
4	"ISO/IEC 10589:1992": notificationAreaAddress	{2 13 0 1 5 x}	EVENT-INFO communicationsAlarm	c18		
5	"ISO/IEC 10589:1992": notificationOverloadStateChange	{2 13 0 1 5 25}	EVENT-INFO communicationsAlarm	c18		
6	"ISO/IEC 10589:1992": notificationReceivingAdjacency	{2 13 0 1 5 x}	EVENT-INFO communicationsAlarm	c18		
7	"ISO/IEC 10589:1992": notificationSourceId	{2 13 0 1 5 14}	EVENT-INFO communicationsAlarm	c18		
8	"ISO/IEC 10589:1992": notificationSystemId	{2 13 0 1 5 19}	EVENT-INFO communicationsAlarm	c19		
9	"ISO/IEC 10589:1992": notificationVirtualLinkAddress	{2 13 0 1 5 16}	EVENT-INFO communicationsInformation	c20		
10	"ISO/IEC 10589:1992": notificationVirtualLinkChange	{2 13 0 1 5 15}	EVENT-INFO communicationsInformation	c20		
11	"ISO/IEC 10589:1992": constraintViolation	{2 13 0 1 5 10}	SPECIFIC-ERROR maximumAreaAddresses maximumPathSplits maximumVirtualAdjacencies originatingL1LSPBufferSize originatingL2LSPBufferSize neighbourSNPAAddress manualL2OnlyMode	c21		
12	reachabilityChange	{2 13 0 2 5 12}	EVENT-INFO communicationsInformation	c22		
13	"ISO/IEC 10589:1992": notificationDesignatedIntermediateSystemChange	{2 13 0 1 5 24}	EVENT-INFO communicationsInformation	c22		
14	notificationData	{2 13 0 2 5 7}	EVENT-INFO communicationsAlarm	c23		

c18: if D.3/4a then m else –

c19: if D.3/4a or D.3/19a then m else –

c20: if D.3/5a then m else –

c21: if E.1/26a or E.1/26b or E.1/26c or E.1/30a or E.1/30b or E.1/30c or E.1/31a or E.1/31b or E.1/31c or E.1/31f or E.1/41a or E.1/41b or E.1/41c or E.1/42a or E.1/42b or E.1/42c or E.1/42f or E.4/48a or E.4/48b or E.4/48c or E.4/48f or E.4/64a or E.4/64b or E.4/64c or E.4/64f then m else –

c22: if D.3/20a then m else –

c23: if D.3/53a then m else –

--`,,```,,,,````-`-`,,`,,`,`,,`---

Copyright International Organization for Standardization
Provided by IHS under license with ISO
No reproduction or networking permitted without license from IHS
Not for Resale

Annex F[5)]

MOCS proforma

(This annex forms an integral part of this Recommendation | International Standard)

F.1 Introduction

The purpose of this MOCS proforma is to provide a mechanism for a supplier of an implementation of a Recommendation | International Standard which claims conformance to a managed object class, to provide conformance information in a standard form.

F.1.1 Instructions for completing the MOCS proforma to produce a MOCS[6)]

The MOCS proforma contained in this annex is comprised of information in tabular form, in accordance with ITU-T Rec. X.724 | ISO/IEC 10165-6. The supplier of the implementation shall state which items are supported in the tables below and if necessary provide additional information.

F.1.2 Symbols, abbreviations and terms

The MOCS proforma contained in this annex is comprised of information in tabular form, in accordance with ITU-T Rec. X.291 | ISO/IEC 9646-2.

The notations used in the Status and Support columns are specified in D.1.3.

F.2 The CLNS managed object

F.2.1 Statement of conformance to the managed object class

See Table F.1.

Table F.1 – cLNS Managed object class support

Index	Managed object class template label	Value of object identifier for class	Support of all mandatory features? (Y/N)	Is the actual class the same as the managed object class to which conformance is claimed? (Y/N)
1	cLNS	{2 13 0 2 3 21}		

If the answer to the actual class question in Table F.1 is No, the supplier of the implementation shall fill in the actual class support Table F.2.

Table F.2 – cLNS Actual class support

Index	Managed object class template for actual class	Value of object identifier for managed object class definition of actual class	Additional information

5) **Copyright release for MOCS proforma**

Users of this Recommendation | International Standard may freely reproduce the MOCS proforma in this annex so that it can be used for its intended purpose, and may further publish the completed MOCS.

6) Instructions for MOCS proforma are specified in ITU-T Rec. X.724 | ISO/IEC 10165-6.

Copyright International Organization for Standardization
Provided by IHS under license with ISO
No reproduction or networking permitted without license from IHS
Not for Resale

F.2.2 Packages

The supplier of the implementation shall state whether or not the packages specified by this managed object of this class are supported, in Table F.3.

Table F.3 – cLNS Package support

Index	Package template label	Value of object identifier for package	Constraints and values	Status	Support	Additional information
1	"CCITT Rec. X.721 (1992) | ISO/IEC 10165-2:1992": topPackage		Mandatory	m		
2	"CCITT Rec. X.721 (1992) | ISO/IEC 10165-2:1992": packagesPackage	{2 9 3 2 4 16}	"any registered package, other than this package has been instantiated"	c1		
3	"CCITT Rec. X.721 (1992) | ISO/IEC 10165-2:1992": allomorphicPackage	{2 9 3 2 4 17}	"if an object supports allomorphism"	c2		
4	cLNS-P		Mandatory	m		
5	"ITU-T Rec. X.723 (1993) | ISO/IEC 10165-5:1994": clProtocolMachineP1		Mandatory	m		
6	"ITU-T Rec. X.723 (1993) | ISO/IEC 10165-5:1994": clProtocolMachineP2	{2 9 3 5 4 1}	"there is a requirement to keep statistics concerning remote connectionless protocol machines that this protocol machine communicates with"	o		
7	cLNS8473-P	{2 13 0 2 4 20}	"The protocol defined in ISO 8473 is used to implement the CLNS"	o		
8	cLNSChecksum-P	{2 13 0 2 4 1}	"The ISO 8473 Generate Checksum option is implemented"	o		
9	"ISO/IEC 10589:1992": cLNSISISBasic-P	{2 13 0 1 4 1}	"The system is an ISO 10589 IS"	o		
10	"ISO/IEC 10589:1992": cLNSISISAuthentication-P	{2 13 0 1 4 4}	"The system is an ISO 10589 IS and the authentication procedures are implemented"	o		
11	"ISO/IEC 10589:1992": cLNSISISPartitionRepair-P	{2 13 0 1 4 3}	"The system is an ISO 10589 Level 2 IS and the partition repair procedures are implemented"	o		
12	"ISO/IEC 10589:1992": cLNSISISLevel2-P	{2 13 0 1 4 2}	"The system is an ISO 10589 Level 2 IS"	o		
13	"ISO/IEC 10589:1992": cLNSISISLevel2Authentication-P	{2 13 0 1 4 5}	"The system is an ISO 10589 Level 2 IS and the authentication procedures are implemented"	o		

c1: if F.3/3a or F.3/6a or F.3/8a or F.3/9a or F.3/10a or F.3/11a or F.3/12a or F.3/13a then m else –
c2: if F.1/1b then – else m

F.2.3 Attributes

The supplier of the implementation shall state whether or not the attributes specified by all of the packages instantiated in a managed object of this class are supported, in the Support and Additional information columns of Table F.4. The supplier of the implementation shall indicate support for each of the operations for each attribute supported.

Copyright International Organization for Standardization
Provided by IHS under license with ISO
No reproduction or networking permitted without license from IHS
Not for Resale

Copyright International Organization for Standardization
Provided by IHS under license with ISO
No reproduction or networking permitted without license from IHS
Not for Resale

Table F.4 – cLNS Attribute support

				Set by create		Get		Replace		Add		Remove		Set to default		
Index	Attribute template label	Value of object identifier for attribute	Constraints and values	Status	Support	Status	Support	Status	Support	Status	Support	Status	Support	Status	Support	Additional information
1	"CCITT Rec. X.721 (1992) | ISO/IEC 10165-2:1992": administrativeState	{2 9 3 2 7 31}	ENUMERATED	c3		m		m		–		–		c4		
2	"CCITT Rec. X.721 (1992) | ISO/IEC 10165-2:1992": allomorphs	{2 9 3 2 7 50}	SET OF ObjectClass	c5		c6		–		–		–		–		
3	"ISO/IEC 10589:1992": areaAddresses	{2 13 0 1 7 18}	SET OF OCTET STRING	c7		c8		c9		c9		c9		c9		
4	"ISO/IEC 10589:1992": areaReceivePasswords	{2 13 0 1 7 112}	SET OF OCTET STRING	c10		c11		c11		c11		c11		c11		
5	"ISO/IEC 10589:1992": areaTransmitPassword	{2 13 0 1 7 111}	OCTET STRING	c10		c11		c11		–		–		c11		
6	assemblingSegmentsDiscarded	{2 13 0 2 7 8}	INTEGER	c12		m		c4		–		–		c4		
7	"ISO/IEC 10589:1992": attemptsToExceedMaximumSequenceNumber	{2 13 0 1 7 22}	INTEGER	c7		c8		c9		–		–		c9		
8	"ISO/IEC 10589:1992": authenticationFailures	{2 13 0 1 7 117}	INTEGER	c13		c11		c14		–		–		c14		
9	"ITU-T Rec. X.723 (1993) | ISO/IEC 10165-5:1994": clProtocolMachineId	{2 9 3 5 7 2}	GraphicString	c15		m		x		–		–		x		
10	"ISO/IEC 10589:1992": completeSNPInterval	{2 13 0 1 7 8}	INTEGER	c16		c8		c8		–		–		c9		
11	congestionDiscards	{2 13 0 2 7 11}	INTEGER	c12		m		c4		–		–		c4		
12	"ISO/IEC 10589:1992": corruptedLSPsDetected	{2 13 0 1 7 19}	INTEGER	c7		c8		c9		–		–		c9		
13	"ISO/IEC 10589:1992": dRISISHelloTimer	{2 13 0 1 7 16}	INTEGER	c16		c8		c8		–		–		c9		
14	"ISO/IEC 10589:1992": domainReceivePasswords	{2 13 0 1 7 114}	SET OF OCTET STRING	c17		c18		c18		c18		c18		c18		
15	"ISO/IEC 10589:1992": domainTransmitPassword	{2 13 0 1 7 113}	OCTET STRING	c17		c18		c18		–		–		c18		

--`,,```,,,,````-`-`,,`,,`,`,,`---

Copyright International Organization for Standardization
Provided by IHS under license with ISO
No reproduction or networking permitted without license from IHS
Not for Resale

Table F.4 *(continued)*

				Set by create		Get		Replace		Add		Remove		Set to default		
Index	Attribute template label	Value of object identifier for attribute	Constraints and values	Status	Support	Status	Support	Status	Support	Status	Support	Status	Support	Status	Support	Additional information
16	enableChecksum	{2 13 0 2 7 4}	BOOLEAN	c19		c20		c20		–		–		c20		
17	errorReportsReceived	{2 13 0 2 7 9}	INTEGER	c12		m		c4		–		–		c4		
18	“ISO/IEC 10589:1992”: iDFieldLengthMismatches	{2 13 0 1 7 25}	INTEGER	c7		c8		c9		–		–		c9		
19	“ISO/IEC 10589:1992”: iSType	{2 13 0 1 7 2}	ENUMERATED	c16		c8		c9		–		–		c9		
20	“ISO/IEC 10589:1992”: l1State	{2 13 0 1 7 17}	ENUMERATED	c7		c8		c9		–		–		c9		
21	“ISO/IEC 10589:1992”: l2State	{2 13 0 1 7 28}	ENUMERATED	c21		c22		c23		–		–		c23		
22	“ISO/IEC 10589:1992”: lSPL1DatabaseOverloads	{2 13 0 1 7 20}	INTEGER	c7		c8		c9		–		–		c9		
23	“ISO/IEC 10589:1992”: lSPL2DatabaseOverloads	{2 13 0 1 7 32}	INTEGER	c21		c22		c23		–		–		c23		
24	“ISO/IEC 10589:1992”: manualAddressesDroppedFromArea	{2 13 0 1 7 21}	INTEGER	c7		c8		c9		–		–		c9		
25	“ISO/IEC 10589:1992”: manualareaAddresses	{2 13 0 1 7 10}	SET OF OCTET STRING	c7		c8		c9		c9		c9		c9		
26	“ISO/IEC 10589:1992”: maximumAreaAddresses	{2 13 0 1 7 4}	INTEGER “ISO/IEC 10589:1992”: constraintViolation	c16		c8		c8		–		–		c9		
27	“ISO/IEC 10589:1992”: maximumAreaAddressesMismatches	{2 13 0 1 7 118}	INTEGER	c7		c8		c9		–		–		c9		
28	“ISO/IEC 10589:1992”: maximumLSPGenerationInterval	{2 13 0 1 7 6}	INTEGER	c16		c8		c8		–		–		c9		
29	maximumLifetime	{2 13 0 2 7 102}	INTEGER	c3		m		m		–		–		c4		
30	“ISO/IEC 10589:1992”: maximumPathSplits	{2 13 0 1 7 3}	INTEGER “ISO/IEC 10589:1992”: constraintViolation	c16		c8		c8		–		–		c8		

Copyright International Organization for Standardization
Provided by IHS under license with ISO
No reproduction or networking permitted without license from IHS
Not for Resale

Table F.4 *(continued)*

				Set by create		Get		Replace		Add		Remove		Set to default		
Index	Attribute template label	Value of object identifier for attribute	Constraints and values	Status	Support	Status	Support	Status	Support	Status	Support	Status	Support	Status	Support	Additional information
31	"ISO/IEC 10589:1992": maximumVirtualAdjacencies	{2 13 0 1 7 27}	INTEGER "ISO/IEC 10589:1992": constraintViolation	c24		c25		c25		–		–		c25		
32	"ISO/IEC 10589:1992": minimumBroadcastLSPTransmissionInterval	{2 13 0 1 7 7}	INTEGER	c16		c8		c8		–		–		c9		
33	"ISO/IEC 10589:1992": minimumLSPGenerationInterval	{2 13 0 1 7 11}	INTEGER	c16		c8		c8		–		–		c9		
34	"ISO/IEC 10589:1992": minimumLSPTransmissionInterval	{2 13 0 1 7 5}	INTEGER	c16		c8		c8		–		–		c9		
35	"CCITT Rec. X.721 (1992) | ISO/IEC 10165-2:1992": nameBinding	{2 9 3 2 7 63}	OBJECT IDENTIFIER	c15		m		x		–		–		x		
36	"CCITT Rec. X.721 (1992) | ISO/IEC 10165-2:1992": objectClass	{2 9 3 2 7 65}	ObjectClass	c3		m		x		–		–		x		
37	"CCITT Rec. X.721 (1992) | ISO/IEC 10165-2:1992": octetsReceivedCounter	{2 9 3 2 7 78}	INTEGER	c12		m		c4		–		–		c4		
38	"CCITT Rec. X.721 (1992) | ISO/IEC 10165-2:1992": octetsSentCounter	{2 9 3 2 7 80}	INTEGER	c12		m		c4		–		–		c4		
39	"CCITT Rec. X.721 (1992) | ISO/IEC 10165-2:1992": operationalState	{2 9 3 2 7 35}	ENUMERATED	x		m		x		–		–		x		
40	operationalSystemType	{2 13 0 2 7 109}	ENUMERATED	c3		m		c4		–		–		c4		
41	"ISO/IEC 10589:1992": originatingL1LSPBufferSize	{2 13 0 1 7 9}	INTEGER "ISO/IEC 10589:1992": constraintViolation	c16		c8		c8		–		–		c9		

Copyright International Organization for Standardization
Provided by IHS under license with ISO
No reproduction or networking permitted without license from IHS
Not for Resale

Table F.4 *(continued)*

				Set by create		Get		Replace		Add		Remove		Set to default		
Index	Attribute template label	Value of object identifier for attribute	Constraints and values	Status	Support	Status	Support	Status	Support	Status	Support	Status	Support	Status	Support	Additional information
42	"ISO/IEC 10589:1992": originatingL2LSPBufferSize	{2 13 0 1 7 26}	INTEGER "ISO/IEC 10589:1992": constraintViolation	c26		c22		c22		–		–		c22		
43	"ISO/IEC 10589:1992": ownLSPPurges	{2 13 0 1 7 24}	INTEGER	c7		c8		c9		–		–		c9		
44	pDUDiscards	{2 13 0 2 7 10}	INTEGER	c12		m		c4		–		–		c4		
45	"CCITT Rec. X.721 (1992) | ISO/IEC 10165-2:1992": packages	{2 9 3 2 7 66}	SET OF OBJECT IDENTIFIER	c27		c28		c29		c29		c29		c29		
46	"ISO/IEC 10589:1992": partialSNPInterval	{2 13 0 1 7 14}	INTEGER	c16		c8		c8		–		–		c9		
47	"ISO/IEC 10589:1992": partitionAreaAddresses	{2 13 0 1 7 29}	SET OF OCTET STRING	c30		c25		c31		c31		c31		c31		
48	"ISO/IEC 10589:1992": partitionDesignatedL2IntermediateSystem	{2 13 0 1 7 30}	OCTET STRING	c30		c25		c31		–		–		c31		
49	"ISO/IEC 10589:1992": partitionVirtualLinkChanges	{2 13 0 1 7 31}	INTEGER	c30		c25		c31		–		–		c31		
50	"ISO/IEC 10589:1992": pollESHelloRate	{2 13 0 1 7 13}	INTEGER	c16		c8		c8		–		–		c9		
51	segmentsDiscarded	{2 13 0 2 7 7}	INTEGER	c12		m		c4		–		–		c4		
52	segmentsReceived	{2 13 0 2 7 6}	INTEGER	c12		m		c4		–		–		c4		
53	segmentsSent	{2 13 0 2 7 118}	INTEGER	c12		m		c4		–		–		c4		
54	"ISO/IEC 10589:1992": sequenceNumberSkips	{2 13 0 1 7 23}	INTEGER	c7		c8		c9		–		–		c9		
55	supportedProtocols	{2 13 0 2 7 110}	SET OF SEQUENCE	c12		m		c4		c4		c4		c4		
56	"ISO/IEC 10589:1992": systemId	{2 13 0 1 7 119}	OCTET STRING	c7		c8		c9		–		–		c9		
57	"ITU-T Rec. X.723 (1993) | ISO/IEC 10165-5:1994": totalRemoteSAPs	{2 9 3 5 7 13}	INTEGER	c32		c33		c34		–		–		c34		
58	"ISO/IEC 10589:1992": version	{2 13 0 1 7 1}	GraphicString	c7		c8		c9		–		–		c9		

Copyright International Organization for Standardization
Provided by IHS under license with ISO
No reproduction or networking permitted without license from IHS
Not for Resale

Table F.4 *(concluded)*

				Set by create		Get		Replace		Add		Remove		Set to default		
Index	Attribute template label	Value of object identifier for attribute	Constraints and values	Status	Support	Status	Support	Status	Support	Status	Support	Status	Support	Status	Support	Additional information
59	"ISO/IEC 10589:1992": waitingTime	{2 13 0 1 7 15}	INTEGER	c16		c8		c8		–		–		c9		

c3: if G.1/2a then m else x
c4: if F.1/1b then x else –
c5: if F.3/3a then (if G.1/2a then o else x) else –
c6: if F.3/3a then m else –
c7: if F.3/9a and [F.1/1b or (G.1/1a or G.1/3a)] then x else –
c8: if F.3/9a then m else –
c9: if F.3/9a and F.1/1b then x else –
c10: if F.3/10a then (if G.1/2a then m else x) else –
c11: if F.3/10a then m else –
c12: if F.1/1b or (G.1/1a or G.1/3a) then x else –
c13: if F.3/10a and [F.1/1b or (G.1/1a or G.1/3a)] then x else –
c14: if F.3/10a and F.1/1b then x else –
c15: if G.1/2a then o else x
c16: if F.3/9a then (if G.1/2a then m else x) else –
c17: if F.3/13a then (if G.1/2a then m else x) else –
c18: if F.3/13a then m else –
c19: if F.3/8a then (if G.1/2a then m else x) else –
c20: if F.3/8a then m else –
c21: if F.3/12a and [F.1/1b or (G.1/1a or G.1/3a)] then x else –
c22: if F.3/12a then m else –
c23: if F.3/12a and F.1/1b then x else –
c24: if F.3/11a then (if G.1/2a then m else x) else –
c25: if F.3/11a then m else –
c26: if F.3/12a then (if G.1/2a then m else x) else –
c27: if F.3/2a then (if G.1/2a then o else x) else –
c28: if F.3/2a then m else –
c29: if F.3/2a then x else –
c30: if F.3/11a and [F.1/1b or (G.1/1a or G.1/3a)] then x else –
c31: if F.3/11a and F.1/1b then x else –
c32: if F.3/6a and [F.1/1b or (G.1/1a or G.1/3a)] then x else –
c33: if F.3/6a then m else –
c34: if F.3/6a and F.1/1b then x else –

--`,,```,,,,````-`-`,,`,,`,`,,`---

F.2.4 Attribute group

See Table F.5.

Table F.5 – cLNS Attribute group support

				Get		Set to default		
Index	Attribute group template label	Value of object identifier for attribute group	Constraints and values	Status	Support	Status	Support	Additional information
1	"ITU-T Rec. X.723 (1993) | ISO/IEC 10165-5:1994": counters	{2 9 3 5 8 0}		m		c4		
2	"CCITT Rec. X.721 (1992) | ISO/IEC 10165-2:1992": state	{2 9 3 2 8 1}		m		c4		

F.2.5 Action

See Table F.6.

Copyright International Organization for Standardization
Provided by IHS under license with ISO
No reproduction or networking permitted without license from IHS
Not for Resale

Copyright International Organization for Standardization
Provided by IHS under license with ISO
No reproduction or networking permitted without license from IHS
Not for Resale

Table F.6 – cLNS Action support

Index	Action type template label	Value of object identifier for action type	Constraints and values	Status	Support	Additional information	Subindex	Action field name label	Constraints and values	Status	Support	Additional information
1	"ITU-T Rec. X.723 (1993) | ISO/IEC 10165-5:1994": activate	{2 9 3 5 9 0}		m			1.1	ActionInfo	**Information Syntax** SET OF SEQUENCE	m		
							1.1.1	identifier	OBJECT IDENTIFIER	m		
							1.1.2	significance	BOOLEAN	o		
							1.1.3	information	ANY DEFINED BY identifier	m		
							1.2	ActionReply	**Reply Syntax** SET OF SEQUENCE	m		
							1.2.1	identifier	OBJECT IDENTIFIER	m		
							1.2.2	significance	BOOLEAN	o		
							1.2.3	information	ANY DEFINED BY identifier	m		
2	"ITU-T Rec. X.723 (1993) | ISO/IEC 10165-5:1994": deactivate	{2 9 3 5 9 1}		m			2.1	ActionInfo	**Information Syntax** SET OF SEQUENCE	m		
							2.1.1	identifier	OBJECT IDENTIFIER	m		
							2.1.2	significance	BOOLEAN	o		
							2.1.3	information	ANY DEFINED BY identifier	m		
							2.2	ActionReply	**Reply Syntax** SET OF SEQUENCE	m		
							2.2.1	identifier	OBJECT IDENTIFIER	m		
							2.2.2	significance	BOOLEAN	o		
							2.2.3	information	ANY DEFINED BY identifier	m		

Copyright International Organization for Standardization
Provided by IHS under license with ISO
No reproduction or networking permitted without license from IHS
Not for Resale

F.2.6 Notification

See Table F.7.

Table F.7 – cLNS Notification support

					Support									
Index	Notification type template label	Value of object identifier for notification type	Constraints and values	Status	Con-firmed	Non-con-firmed	Additional information	Subindex	Notification field name label	Value of object identifier of attribute type associated with field	Constraints and values	Status	Support	Additional information
1	"CCITT Rec. X.721 (1992) | ISO/IEC 10165-2:1992": communicationsAlarm	{2 9 3 2 10 2}		m			notificationPDUHeader	1.1	AlarmInfo		**Information Syntax** SEQUENCE	m		
								1.1.1	probableCause	{2 9 3 2 7 18}	CHOICE	m		
								1.1.1.1	globalValue	–	OBJECT IDENTIFIER	o.1		
								1.1.1.2	localValue	–	INTEGER	o.1		
								1.1.2	specificProblems	{2 9 3 2 7 27}	SET OF CHOICE	o		
								1.1.2.1	OBJECT IDENTIFIER	–	OBJECT IDENTIFIER	c:o.2		
								1.1.2.2	INTEGER	–	INTEGER	c:o.2		
								1.1.3	perceivedSeverity	{2 9 3 2 7 17}	ENUMERATED	m		
								1.1.4	backedUpStatus	{2 9 3 2 7 11}	BOOLEAN	o		
								1.1.5	backUpObject	{2 9 3 2 7 40}	ObjectInstance	o		
								1.1.6	trendIndication	{2 9 3 2 7 30}	ENUMERATED	o		
								1.1.7	thresholdInfo	{2 9 3 2 7 29}	SEQUENCE	o		

Copyright International Organization for Standardization
Provided by IHS under license with ISO
No reproduction or networking permitted without license from IHS
Not for Resale

Table F.7 *(continued)*

					Support									
Index	Notification type template label	Value of object identifier for notification type	Constraints and values	Status	Con-firmed	Non-con-firmed	Additional information	Subindex	Notification field name label	Value of object identifier of attribute type associated with field	Constraints and values	Status	Support	Additional information
								1.1.7.1	triggeredThreshold	–	AttributeId	c:m		
								1.1.7.2	observedValue	–	CHOICE	c:m		
								1.1.7.2.1	integer	–	INTEGER	c:o.3		
								1.1.7.2.2	real	–	REAL	c:o.3		
								1.1.7.3	thresholdLevel	–	CHOICE	c:o		
								1.1.7.3.1	up	–	SEQUENCE	c:o.4		
								1.1.7.3.1.1	high	–	CHOICE	c:m		
								1.1.7.3.1.1.1	integer	–	INTEGER	c:o.5		
								1.1.7.3.1.1.2	real	–	REAL	c:o.5		
								1.1.7.3.1.2	low	–	CHOICE	c:o		
								1.1.7.3.1.2.1	integer	–	INTEGER	c:o.6		
								1.1.7.3.1.2.2	real	–	REAL	c:o.6		
								1.1.7.3.2	down	–	SEQUENCE	c:o.4		
								1.1.7.3.2.1	high	–	CHOICE	c:m		
								1.1.7.3.2.1.1	integer	–	INTEGER	c:o.7		
								1.1.7.3.2.1.2	real	–	REAL	c:o.7		
								1.1.7.3.2.2	low	–	CHOICE	c:m		
								1.1.7.3.2.2.1	integer	–	INTEGER	c:o.8		
								1.1.7.3.2.2.2	real	–	REAL	c:o.8		
								1.1.7.4	armTime	–	GeneralizedTime	c:o		
								1.1.8	notificationIdentifier	{2 9 3 2 7 16}	INTEGER	o		
								1.1.9	correlatedNotifications	{2 9 3 2 7 12}	SET OF SEQUENCE	o		

Copyright International Organization for Standardization
Provided by IHS under license with ISO
No reproduction or networking permitted without license from IHS
Not for Resale

Table F.7 *(continued)*

Index	Notification type template label	Value of object identifier for notification type	Constraints and values	Status	Support		Additional information	Subindex	Notification field name label	Value of object identifier of attribute type associated with field	Constraints and values	Status	Support	Additional information
					Con-firmed	Non-con-firmed								
								1.1.9.1	correlatedNotifications	{2 9 3 2 7 12}	SET OF INTEGER	c:m		
								1.1.9.2	sourceObjectInst	–	ObjectInstance	c:o		
								1.1.10	stateChangeDefinition	{2 9 3 2 7 28}	SET OF SEQUENCE	o		
								1.1.10.1	attributeID	–	AttributeId	c:m		
								1.1.10.2	oldAttributeValue	–	ANY DEFINED BY attributeID	c:o		
								1.1.10.3	newAttributeValue	–	ANY DEFINED BY attributeID	c:m		
								1.1.11	monitoredAttributes	{2 9 3 2 7 15}	SET OF Attribute	o		
								1.1.12	proposedRepairActions	{2 9 3 2 7 19}	SET OF CHOICE	o		
								1.1.12.1	OBJECT IDENTIFIER	–	OBJECT IDENTIFIER	c:o.9		
								1.1.12.2	INTEGER	–	INTEGER	c:o.9		
								1.1.13	additionalText	{2 9 3 2 7 7}	GraphicString	o		
								1.1.14	additionalInformation	{2 9 3 2 7 6}	SET OF SEQUENCE	o		
								1.1.14.1	identifier	–	OBJECT IDENTIFIER	c:m		
								1.1.14.2	significance	–	BOOLEAN	c:o		
								1.1.14.3	information	–	ANY DEFINED BY identifier	c:m		

Copyright International Organization for Standardization
Provided by IHS under license with ISO
No reproduction or networking permitted without license from IHS
Not for Resale

Table F.7 *(continued)*

Index	Notification type template label	Value of object identifier for notification type	Constraints and values	Status	Support: Con-firmed	Support: Non-con-firmed	Additional information	Subindex	Notification field name label	Value of object identifier of attribute type associated with field	Constraints and values	Status	Support	Additional information
2	"ITU-T Rec. X.723 (1993) | ISO/IEC 10165-5:1994": communicationsInformation	{2 9 3 5 10 0}		c35			"ISO/IEC 10589:1992": notificationVirtualLinkAddress "ISO/IEC 10589:1992": notificationVirtualLinkChange	2.1	CommunicationsInformation		**Information Syntax** SEQUENCE	c35		
								2.1.1	informationType	{2 9 3 5 7 5}	OBJECT IDENTIFIER	c:m		
								2.1.2	informationData	{2 9 3 5 7 4}	SET OF SEQUENCE	c:o		
								2.1.2.1	identifier	–	OBJECT IDENTIFIER	c:m		
								2.1.2.2	significance	–	BOOLEAN	c:o		
								2.1.2.3	information	–	ANY DEFINED BY identifier	c:m		
3	"CCITT Rec. X.721 (1992) | ISO/IEC 10165-2:1992": objectCreation	{2 9 3 2 10 6}		m				3.1	ObjectInfo		**Information Syntax** SEQUENCE	m		
								3.1.1	sourceIndicator	{2 9 3 2 7 26}	ENUMERATED	o		
								3.1.2	attributeList	{2 9 3 2 7 9}	SET OF Attribute	o		
								3.1.3	notificationIdentifier	{2 9 3 2 7 16}	INTEGER	o		

Copyright International Organization for Standardization
Provided by IHS under license with ISO
No reproduction or networking permitted without license from IHS
Not for Resale

Table F.7 *(continued)*

Index	Notification type template label	Value of object identifier for notification type	Constraints and values	Status	Support: Con-firmed	Support: Non-con-firmed	Additional information	Subindex	Notification field name label	Value of object identifier of attribute type associated with field	Constraints and values	Status	Support	Additional information
								3.1.4	correlatedNotifications	{2 9 3 2 7 12}	SET OF SEQUENCE	o		
								3.1.4.1	correlatedNotifications	{2 9 3 2 7 12}	SET OF INTEGER	c:m		
								3.1.4.2	sourceObjectInst	–	ObjectInstance	c:o		
								3.1.5	additionalText	{2 9 3 2 7 7}	GraphicString	o		
								3.1.6	additionalInformation	{2 9 3 2 7 6}	SET OF SEQUENCE	o		
								3.1.6.1	identifier	–	OBJECT IDENTIFIER	c:m		
								3.1.6.2	significance	–	BOOLEAN	c:o		
								3.1.6.3	information	–	ANY DEFINED BY identifier	c:m		
4	"CCITT Rec. X.721 (1992) | ISO/IEC 10165-2:1992": objectDeletion	{2 9 3 2 10 7}		m				4.1	ObjectInfo		**Information Syntax** SEQUENCE	m		
								4.1.1	sourceIndicator	{2 9 3 2 7 26}	ENUMERATED	o		
								4.1.2	attributeList	{2 9 3 2 7 9}	SET OF Attribute	o		
								4.1.3	notificationIdentifier	{2 9 3 2 7 16}	INTEGER	o		
								4.1.4	correlatedNotifications	{2 9 3 2 7 12}	SET OF SEQUENCE	o		
								4.1.4.1	correlatedNotifications	{2 9 3 2 7 12}	SET OF INTEGER	c:m		

Copyright International Organization for Standardization
Provided by IHS under license with ISO
No reproduction or networking permitted without license from IHS
Not for Resale

Table F.7 *(continued)*

					Support									
Index	Notification type template label	Value of object identifier for notification type	Constraints and values	Status	Con-firmed	Non-con-firmed	Additional information	Subindex	Notification field name label	Value of object identifier of attribute type associated with field	Constraints and values	Status	Support	Additional information
								4.1.4.2	sourceObjectInst	–	ObjectInstance	c:o		
								4.1.5	additionalText	{2 9 3 2 7 7}	GraphicString	o		
								4.1.6	additionalInformation	{2 9 3 2 7 6}	SET OF SEQUENCE	o		
								4.1.6.1	identifier	–	OBJECT IDENTIFIER	c:m		
								4.1.6.2	significance	–	BOOLEAN	c:o		
								4.1.6.3	information	–	ANY DEFINED BY identifier	c:m		
5	"CCITT Rec. X.721 (1992) | ISO/IEC 10165-2:1992": stateChange	{2 9 3 2 10 14}		m				5.1	StateChangeInfo		**Information Syntax** SEQUENCE	m		
								5.1.1	sourceIndicator	{2 9 3 2 7 26}	ENUMERATED	o		
								5.1.2	attributeIdentifierList	{2 9 3 2 7 8}	SET OF AttributeId	o		
								5.1.3	stateChangeDefinition	{2 9 3 2 7 28}	SET OF SEQUENCE	m		
								5.1.3.1	attributeID	–	AttributeId	m		
								5.1.3.2	oldAttributeValue	–	ANY DEFINED BY attributeID	o		
								5.1.3.3	newAttributeValue	–	ANY DEFINED BY attributeID	m		
								5.1.4	notificationIdentifier	{2 9 3 2 7 16}	INTEGER	o		

Copyright International Organization for Standardization
Provided by IHS under license with ISO
No reproduction or networking permitted without license from IHS
Not for Resale

Table F.7 *(concluded)*

					Support									
Index	Notification type template label	Value of object identifier for notification type	Constraints and values	Status	Con-firmed	Non-con-firmed	Additional information	Subindex	Notification field name label	Value of object identifier of attribute type associated with field	Constraints and values	Status	Support	Additional information
								5.1.5	correlatedNotifications	{2 9 3 2 7 12}	SET OF SEQUENCE	o		
								5.1.5.1	correlatedNotifications	{2 9 3 2 7 12}	SET OF INTEGER	c:m		
								5.1.5.2	sourceObjectInst	–	ObjectInstance	c:o		
								5.1.6	additionalText	{2 9 3 2 7 7}	GraphicString	o		
								5.1.7	additionalInformation	{2 9 3 2 7 6}	SET OF SEQUENCE	o		
								5.1.7.1	identifier	–	OBJECT IDENTIFIER	c:m		
								5.1.7.2	significance	–	BOOLEAN	c:o		
								5.1.7.3	information	–	ANY DEFINED BY identifier	c:m		
c35: if F.3/9a or F.3/11a then m else –														

--`,,```,,,,````-`-`,,`,,`,`,,`---

F.2.7 Parameter

See Table F.8.

Table F.8 – cLNS Parameter support

Index	Parameter template label	Value of object identifier for parameter	Constraints and values	Status	Support	Additional information
1	notificationPDUHeader	{2 13 0 2 5 1}	EVENT-INFO communicationsAlarm	m		
2	"ISO/IEC 10589:1992": notificationAreaAddress	{2 13 0 1 5 x}	EVENT-INFO communicationsAlarm	c8		
3	"ISO/IEC 10589:1992": notificationIDLength	{2 13 0 1 5 x}	EVENT-INFO communicationsAlarm	c8		
4	"ISO/IEC 10589:1992": notificationAreaAddress	{2 13 0 1 5 x}	EVENT-INFO communicationsAlarm	c8		
5	"ISO/IEC 10589:1992": notificationOverloadStateChange	{2 13 0 1 5 25}	EVENT-INFO communicationsAlarm	c36		
6	"ISO/IEC 10589:1992": notificationReceivingAdjacency	{2 13 0 1 5 x}	EVENT-INFO communicationsAlarm	c8		
7	"ISO/IEC 10589:1992": notificationSourceId	{2 13 0 1 5 14}	EVENT-INFO communicationsAlarm	c36		
8	"ISO/IEC 10589:1992": notificationSystemId	{2 13 0 1 5 x}	EVENT-INFO communicationsAlarm	c37		
9	"ISO/IEC 10589:1992": notificationVirtualLinkAddress	{2 13 0 1 5 16}	EVENT-INFO communicationsInformation	c25		
10	"ISO/IEC 10589:1992": notificationVirtualLinkChange	{2 13 0 1 5 15}	EVENT-INFO communicationsInformation	c25		
11	"ISO/IEC 10589:1992": constraintViolation	{2 13 0 1 5 10}	SPECIFIC-ERROR maximumAreaAddresses maximumPathSplits maximumVirtualAdjacencies originatingL1LSPBufferSize originatingL2LSPBufferSize	c38		
c36: if F.3/9a or F.3/12a then m else – c37: if F.3/9a or F.3/10a then m else – c38: if F.3/9a or F.3/11a or F.3/12a then m else –						

Copyright International Organization for Standardization
Provided by IHS under license with ISO
No reproduction or networking permitted without license from IHS
Not for Resale

F.3 The CONS managed object

F.3.1 Statement of conformance to the managed object class

See Table F.9.

Table F.9 – cONS Managed object class support

Index	Managed object class template label	Value of object identifier for class	Support of all mandatory features? (Y/N)	Is the actual class the same as the managed object class to which conformance is claimed? (Y/N)
1	cONS	{2 13 0 2 3 24}		

If the answer to the actual class question in Table F.9 is No, the supplier of the implementation shall fill in the actual class support Table F.10.

Table F.10 – cONS Actual class support

Index	Managed object class template for actual class	Value of object identifier for managed object class definition of actual class	Additional information

F.3.2 Packages

The supplier of the implementation shall state whether or not the packages specified by this managed object of this class are supported, in Table F.11.

Table F.11 – cONS Package support

Index	Package template label	Value of object identifier for package	Constraints and values	Status	Support	Additional information
1	"CCITT Rec. X.721 (1992) | ISO/IEC 10165-2:1992": topPackage		Mandatory	m		
2	"CCITT Rec. X.721 (1992) | ISO/IEC 10165-2:1992": packagesPackage	{2 9 3 2 4 16}	"any registered package, other than this package has been instantiated"	c39		
3	"CCITT Rec. X.721 (1992) | ISO/IEC 10165-2:1992": allomorphicPackage	{2 9 3 2 4 17}	"if an object supports allomorphism"	c40		
4	cONS-P		Mandatory	m		
5	"ITU-T Rec. X.723 (1993) | ISO/IEC 10165-5:1994": coProtocolMachineP1		Mandatory	m		
c39: if F.11/3a then m else – c40: if F.9/1b then – else m						

F.3.3 Attributes

The supplier of the implementation shall state whether or not the attributes specified by all of the packages instantiated in a managed object of this class are supported, in the Support and Additional information columns of Table F.12. The supplier of the implementation shall indicate support for each of the operations for each attribute supported.

Copyright International Organization for Standardization
Provided by IHS under license with ISO
No reproduction or networking permitted without license from IHS
Not for Resale

Copyright International Organization for Standardization
Provided by IHS under license with ISO
No reproduction or networking permitted without license from IHS
Not for Resale

Table F.12 – cONS Attribute support

				Set by create		Get		Replace		Add		Remove		Set to default		
Index	Attribute template label	Value of object identifier for attribute	Constraints and values	Status	Support	Status	Support	Status	Support	Status	Support	Status	Support	Status	Support	Additional information
1	"CCITT Rec. X.721 (1992) | ISO/IEC 10165-2:1992": administrativeState	{2 9 3 2 7 31}	ENUMERATED	c41		m		m		–		–		c42		
2	"CCITT Rec. X.721 (1992) | ISO/IEC 10165-2:1992": allomorphs	{2 9 3 2 7 50}	SET OF ObjectClass	c43		c44		–		–		–		–		
3	"ITU-T Rec. X.723 (1993) | ISO/IEC 10165-5:1994": clProtocolMachineId	{2 9 3 5 7 2}	GraphicString	c45		m		x		–		–		x		
4	"CCITT Rec. X.721 (1992) | ISO/IEC 10165-2:1992": nameBinding	{2 9 3 2 7 63}	OBJECT IDENTIFIER	c45		m		x		–		–		x		
5	"CCITT Rec. X.721 (1992) | ISO/IEC 10165-2:1992": objectClass	{2 9 3 2 7 65}	ObjectClass	c41		m		x		–		–		x		
6	"CCITT Rec. X.721 (1992) | ISO/IEC 10165-2:1992": operationalState	{2 9 3 2 7 35}	ENUMERATED	x		m		x		–		–		x		
7	operationalSystemType	{2 13 0 2 7 109}	ENUMERATED	c41		m		c42		–		–		c42		
8	"CCITT Rec. X.721 (1992) | ISO/IEC 10165-2:1992": packages	{2 9 3 2 7 66}	SET OF OBJECT IDENTIFIER	c46		c47		c48		c48		c48		c48		

c41: if G.1/5a then m else x
c42: if F.9/1b then x else –
c43: if F.11/3a then (if G.1/5a then o else x) –
c44: if F.11/3a then m else –
c45: if G.1/5a then o else x
c46: if F.11/2a then (if G.1/5a then o else x) else –
c47: if F.11/2a then m else –
c48: if F.11/2a then x else –

F.3.4 Attribute group

See Table F.13.

Table F.13 – cONS Attribute group support

				Get		Set to default		
Index	Attribute group template label	Value of object identifier for attribute group	Constraints and values	Status	Support	Status	Support	Additional information
1	"CCITT Rec. X.721 (1992) | ISO/IEC 10165-2:1992": state	{2 9 3 2 8 1}	"CCITT Rec. X.721 (1992) | ISO/IEC 10165-2:1992": administrativeState "CCITT Rec. X.721 (1992) | ISO/IEC 10165-2:1992": operationalState	m		c42		

Copyright International Organization for Standardization
Provided by IHS under license with ISO
No reproduction or networking permitted without license from IHS
Not for Resale

Copyright International Organization for Standardization
Provided by IHS under license with ISO
No reproduction or networking permitted without license from IHS
Not for Resale

F.3.5 Action

See Table F.14.

Table F.14 – cONS Action support

Index	Action type template label	Value of object identifier for action type	Constraints and values	Status	Support	Additional information	Subindex	Action field name label	Constraints and values	Status	Support	Additional information
1	"ITU-T Rec. X.723 (1993) | ISO/IEC 10165-5:1994": activate	{2 9 3 5 9 0}		m			1.1	ActionInfo	**Information Syntax** SET OF SEQUENCE	m		
							1.1.1	identifier	OBJECT IDENTIFIER	m		
							1.1.2	significance	BOOLEAN	o		
							1.1.3	information	ANY DEFINED BY identifier	m		
							1.2	ActionReply	**Reply Syntax** SET OF SEQUENCE	m		
							1.2.1	identifier	OBJECT IDENTIFIER	m		
							1.2.2	significance	BOOLEAN	o		
							1.2.3	information	ANY DEFINED BY identifier	m		
2	"ITU-T Rec. X.723 (1993) | ISO/IEC 10165-5:1994": deactivate	{2 9 3 5 9 1}		m			2.1	ActionInfo	**Information Syntax** SET OF SEQUENCE	m		
							2.1.1	identifier	OBJECT IDENTIFIER	m		
							2.1.2	significance	BOOLEAN	o		
							2.1.3	information	ANY DEFINED BY identifier	m		
							2.2	ActionReply	**Reply Syntax** SET OF SEQUENCE	m		
							2.2.1	identifier	OBJECT IDENTIFIER	m		
							2.2.2	significance	BOOLEAN	o		
							2.2.3	information	ANY DEFINED BY identifier	m		

--`,,```,,,,````-`-`,,`,,`,`,,`---

Copyright International Organization for Standardization
Provided by IHS under license with ISO
No reproduction or networking permitted without license from IHS

Table F.14 *(concluded)*

Index	Action type template label	Value of object identifier for action type	Constraints and values	Status	Support	Additional information	Subindex	Action field name label	Constraints and values	Status	Support	Additional information
3	"ITU-T Rec. X.723 (1993) | ISO/IEC 10165-5:1994": deactivateWhenNoUsers	{2 9 3 5 9 2}		m			3.1	ActionInfo	**Information Syntax** SET OF SEQUENCE	m		
							3.1.1	identifier	OBJECT IDENTIFIER	m		
							3.1.2	significance	BOOLEAN	o		
							3.1.3	information	ANY DEFINED BY identifier	m		
							3.2	ActionReply	**Reply Syntax** SET OF SEQUENCE	m		
							3.2.1	identifier	OBJECT IDENTIFIER	m		
							3.2.2	significance	BOOLEAN	o		
							3.2.3	information	ANY DEFINED BY identifier	m		

Not for Resale

Copyright International Organization for Standardization
Provided by IHS under license with ISO
No reproduction or networking permitted without license from IHS
Not for Resale

F.3.6 Notifications

See Table F.15.

Table F.15 – cONS Notification support

					Support									
Index	Notification type template label	Value of object identifier for notification type	Constraints and values	Status	Con-firmed	Non-con-firmed	Additional information	Subindex	Notification field name label	Value of object identifier of attribute type associated with field	Constraints and values	Status	Support	Additional information
1	"CCITT Rec. X.721 (1992) | ISO/IEC 10165-2:1992": objectCreation	{2 9 3 2 10 6}		m				1.1	ObjectInfo		**Information Syntax** SEQUENCE	m		
								1.1.1	sourceIndicator	{2 9 3 2 7 26}	ENUMERATED	o		
								1.1.2	attributeList	{2 9 3 2 7 9}	SET OF Attribute	o		
								1.1.3	notificationIdentifier	{2 9 3 2 7 16}	INTEGER	o		
								1.1.4	correlatedNotifications	{2 9 3 2 7 12}	SET OF SEQUENCE	o		
								1.1.4.1	correlatedNotifications	{2 9 3 2 7 12}	SET OF INTEGER	c:m		
								1.1.4.2	sourceObjectInst	–	ObjectInstance	c:o		
								1.1.5	additionalText	{2 9 3 2 7 7}	GraphicString	o		
								1.1.6	additionalInformation	{2 9 3 2 7 6}	SET OF SEQUENCE	o		
								1.1.6.1	identifier	–	OBJECT IDENTIFIER	c:m		
								1.1.6.2	significance	–	BOOLEAN	c:o		
								1.1.6.3	information	–	ANY DEFINED BY identifier	c:m		

Copyright International Organization for Standardization
Provided by IHS under license with ISO
No reproduction or networking permitted without license from IHS
Not for Resale

Table F.15 *(continued)*

					Support									
Index	Notification type template label	Value of object identifier for notification type	Constraints and values	Status	Con-firmed	Non-con-firmed	Additional information	Subindex	Notification field name label	Value of object identifier of attribute type associated with field	Constraints and values	Status	Support	Additional information
2	"CCITT Rec. X.721 (1992) | ISO/IEC 10165-2:1992": objectDeletion	{2 9 3 2 10 7}		m				2.1	ObjectInfo		**Information Syntax** SEQUENCE	m		
								2.1.1	sourceIndicator	{2 9 3 2 7 26}	ENUMERATED	o		
								2.1.2	attributeList	{2 9 3 2 7 9}	SET OF Attribute	o		
								2.1.3	notificationIdentifier	{2 9 3 2 7 16}	INTEGER	o		
								2.1.4	correlatedNotifications	{2 9 3 2 7 12}	SET OF SEQUENCE	o		
								2.1.4.1	correlatedNotifications	{2 9 3 2 7 12}	SET OF INTEGER	c:m		
								2.1.4.2	sourceObjectInst	–	ObjectInstance	c:o		
								2.1.5	additionalText	{2 9 3 2 7 7}	GraphicString	o		
								2.1.6	additionalInformation	{2 9 3 2 7 6}	SET OF SEQUENCE	o		
								2.1.6.1	identifier	–	OBJECT IDENTIFIER	c:m		
								2.1.6.2	significance	–	BOOLEAN	c:o		
								2.1.6.3	information	–	ANY DEFINED BY identifier	c:m		

Copyright International Organization for Standardization
Provided by IHS under license with ISO
No reproduction or networking permitted without license from IHS
Not for Resale

Table F.15 *(concluded)*

					Support									
Index	Notification type template label	Value of object identifier for notification type	Constraints and values	Status	Con-firmed	Non-con-firmed	Additional information	Subindex	Notification field name label	Value of object identifier of attribute type associated with field	Constraints and values	Status	Support	Additional information
3	"CCITT Rec. X.721 (1992) | ISO/IEC 10165-2:1992": stateChange	{2 9 3 2 10 14}		m				3.1	StateChangeInfo		**Information Syntax** SEQUENCE	m		
								3.1.1	sourceIndicator	{2 9 3 2 7 26}	ENUMERATED	o		
								3.1.2	attributeIdentifierList	{2 9 3 2 7 8}	SET OF AttributeId	o		
								3.1.3	stateChangeDefinition	{2 9 3 2 7 28}	SET OF SEQUENCE	m		
								3.1.3.1	attributeID	–	AttributeId	m		
								3.1.3.2	oldAttributeValue	–	ANY DEFINED BY attributeID	o		
								3.1.3.3	newAttributeValue	–	ANY DEFINED BY attributeID	m		
								3.1.4	notificationIdentifier	{2 9 3 2 7 16}	INTEGER	o		
								3.1.5	correlatedNotifications	{2 9 3 2 7 12}	SET OF SEQUENCE	o		
								3.1.5.1	correlatedNotifications	{2 9 3 2 7 12}	SET OF INTEGER	c:m		
								3.1.5.2	sourceObjectInst	–	ObjectInstance	c:o		
								3.1.6	additionalText	{2 9 3 2 7 7}	GraphicString	o		
								3.1.7	additionalInformation	{2 9 3 2 7 6}	SET OF SEQUENCE	o		
								3.1.7.1	identifier	–	OBJECT IDENTIFIER	c:m		
								3.1.7.2	significance	–	BOOLEAN	c:o		
								3.1.7.3	information	–	ANY DEFINED BY identifier	c:m		

F.4 The Recommendation D-Series counts managed object

F.4.1 Statement of conformance to the managed object class

See Table F.16.

Table F.16 – dSeriesCounts Managed object class support

Index	Managed object class template label	Value of object identifier for class	Support of all mandatory features? (Y/N)	Is the actual class the same as the managed object class to which conformance is claimed? (Y/N)
1	dSeriesCounts	{2 13 0 2 3 32}		

If the answer to the actual class question in Table F.16 is No, the supplier of the implementation shall fill in the actual class support Table F.17.

Table F.17 – dSeriesCounts Actual class support

Index	Managed object class template for actual class	Value of object identifier for managed object class definition of actual class	Additional information

F.4.2 Packages

The supplier of the implementation shall state whether or not the packages specified by this managed object of this class are supported, in Table F.18.

Table F.18 – dSeriesCounts Package support

Index	Package template label	Value of object identifier for package	Constraints and values	Status	Support	Additional information
1	"CCITT Rec. X.721 (1992) | ISO/IEC 10165-2:1992": topPackage		Mandatory	m		
2	"CCITT Rec. X.721 (1992) | ISO/IEC 10165-2:1992": packagesPackage	{2 9 3 2 4 16}	"any registered package, other than this package has been instantiated"	c50		
3	"CCITT Rec. X.721 (1992) | ISO/IEC 10165-2:1992": allomorphicPackage	{2 9 3 2 4 17}	"if an object supports allomorphism"	c51		
4	dSeriesCounts-P		Mandatory	m		
c50: if F.18/3a then m else – c51: if F.16/1b then – else m						

F.4.3 Attributes

The supplier of the implementation shall state whether or not the attributes specified by all of the packages instantiated in a managed object of this class are supported, in the Support and Additional information columns of Table F.19. The supplier of the implementation shall indicate support for each of the operations for each attribute supported.

--`,,```,,,,````-`-`,,`,,`,`,,`---
Copyright International Organization for Standardization
Provided by IHS under license with ISO
No reproduction or networking permitted without license from IHS
Not for Resale

Copyright International Organization for Standardization
Provided by IHS under license with ISO
No reproduction or networking permitted without license from IHS

Table F.19 – dSeriesCounts Attribute support

				Set by create		Get		Replace		Add		Remove		Set to default		
Index	Attribute template label	Value of object identifier for attribute	Constraints and values	Status	Support	Status	Support	Status	Support	Status	Support	Status	Support	Status	Support	Additional information
1	"CCITT Rec. X.721 (1992) | ISO/IEC 10165-2:1992": allomorphs	{2 9 3 2 7 50}	SET OF ObjectClass	c52		c53		–		–		–		–		
2	dSeriesId	{2 13 0 2 7 140}	GraphicString	x		m		x		–		–		x		
3	dSeriesResetRequestIndicationPackets	{2 13 0 2 7 141}	INTEGER	x		m		c54		–		–		c54		
4	dSeriesSegmentsReceived	{2 13 0 2 7 143}	INTEGER	x		m		c54		–		–		c54		
5	dSeriesSegmentsSent	{2 13 0 2 7 142}	INTEGER	x		m		c54		–		–		c54		
6	"CCITT Rec. X.721 (1992) | ISO/IEC 10165-2:1992": nameBinding	{2 9 3 2 7 63}	OBJECT IDENTIFIER	x		m		x		–		–		x		
7	"CCITT Rec. X.721 (1992) | ISO/IEC 10165-2:1992": objectClass	{2 9 3 2 7 65}	ObjectClass	x		m		x		–		–		x		
8	"CCITT Rec. X.721 (1992) | ISO/IEC 10165-2:1992": packages	{2 9 3 2 7 66}	SET OF OBJECT IDENTIFIER	c55		c56		c55		c55		c55		c55		

c52: if F.18/3a then x else –
c53: if F.18/3a then m else –
c54: if F.16/1b then x else –
c55: if F.18/2a then x else –
c56: if F.18/2a then m else –

Not for Resale

F.4.4 Attribute groups

See Table F.20.

Table F.20 – dSeriesCounts Attribute group support

				Get		Set to default		
Index	Attribute group template label	Value of object identifier for attribute group	Constraints and values	Status	Support	Status	Support	Additional information
1	"ITU-T Rec. X.723 (1993) | ISO/IEC 10165-5:1994": counters	{2 9 3 5 8 0}	dSeriesResetRequestIndicationPackets dSeriesSegmentsReceived dSeriesSegmentsSent	m		c54		

--`,,```,,,,````-`-`,,`,,`,`,,`---

Copyright International Organization for Standardization
Provided by IHS under license with ISO
No reproduction or networking permitted without license from IHS

Not for Resale

Copyright International Organization for Standardization
Provided by IHS under license with ISO
No reproduction or networking permitted without license from IHS
Not for Resale

F.4.5 Notifications

See Table F.21.

Table F.21 – dSeriesCounts Notification support

					Support									
Index	Notification type template label	Value of object identifier for notification type	Constraints and values	Status	Con-firmed	Non-con-firmed	Additional information	Subindex	Notification field name label	Value of object identifier of attribute type associated with field	Constraints and values	Status	Support	Additional information
1	"CCITT Rec. X.721 (1992) | ISO/IEC 10165-2:1992": objectCreation	{2 9 3 2 10 6}		m				1.1	ObjectInfo		**Information Syntax** SEQUENCE	m		
								1.1.1	sourceIndicator	{2 9 3 2 7 26}	ENUMERATED	o		
								1.1.2	attributeList	{2 9 3 2 7 9}	SET OF Attribute	o		
								1.1.3	notificationIdentifier	{2 9 3 2 7 16}	INTEGER	o		
								1.1.4	correlatedNotifications	{2 9 3 2 7 12}	SET OF SEQUENCE	o		
								1.1.4.1	correlatedNotifications	{2 9 3 2 7 12}	SET OF INTEGER	c:m		
								1.1.4.2	sourceObjectInst	–	ObjectInstance	c:o		
								1.1.5	additionalText	{2 9 3 2 7 7}	GraphicString	o		
								1.1.6	additionalInformation	{2 9 3 2 7 6}	SET OF SEQUENCE	o		
								1.1.6.1	identifier	–	OBJECT IDENTIFIER	c:m		
								1.1.6.2	significance	–	BOOLEAN	c:o		
								1.1.6.3	information	–	ANY DEFINED BY identifier	c:m		

Copyright International Organization for Standardization
Provided by IHS under license with ISO
No reproduction or networking permitted without license from IHS
Not for Resale

Table F.21 *(concluded)*

					Support									
Index	Notification type template label	Value of object identifier for notification type	Constraints and values	Status	Con-firmed	Non-con-firmed	Additional information	Subindex	Notification field name label	Value of object identifier of attribute type associated with field	Constraints and values	Status	Support	Additional information
2	"CCITT Rec. X.721 (1992) | ISO/IEC 10165-2:1992": objectDeletion	{2 9 3 2 10 7}		m				2.1	ObjectInfo		**Information Syntax** SEQUENCE	m		
								2.1.1	sourceIndicator	{2 9 3 2 7 26}	ENUMERATED	o		
								2.1.2	attributeList	{2 9 3 2 7 9}	SET OF Attribute	o		
								2.1.3	notificationIdentifier	{2 9 3 2 7 16}	INTEGER	o		
								2.1.4	correlatedNotifications	{2 9 3 2 7 12}	SET OF SEQUENCE	o		
								2.1.4.1	correlatedNotifications	{2 9 3 2 7 12}	SET OF INTEGER	c:m		
								2.1.4.2	sourceObjectInst	–	ObjectInstance	c:o		
								2.1.5	additionalText	{2 9 3 2 7 7}	GraphicString	o		
								2.1.6	additionalInformation	{2 9 3 2 7 6}	SET OF SEQUENCE	o		
								2.1.6.1	identifier	–	OBJECT IDENTIFIER	c:m		
								2.1.6.2	significance	–	BOOLEAN	c:o		
								2.1.6.3	information	–	ANY DEFINED BY identifier	c:m		

--`,,```,,,,````-`-`,,`,,`,`,,`---

F.5 The linkage managed object

F.5.1 Statement of conformance to the managed object class

See Table F.22.

Table F.22 – linkage Managed object class support

Index	Managed object class template label	Value of object identifier for class	Support of all mandatory features? (Y/N)	Is the actual class the same as the managed object class to which conformance is claimed? (Y/N)
1	linkage	{2 13 0 2 3 23}		

If the answer to the actual class question in Table F.22 is No, the supplier of the implementation shall fill in the actual class support Table F.23.

Table F.23 – linkage Actual class support

Index	Managed object class template for actual class	Value of object identifier for managed object class definition of actual class	Additional information

F.5.2 Packages

The supplier of the implementation shall state whether or not the packages specified by this managed object of this class are supported, in Table F.24.

Table F.24 – linkage Package support

Index	Package template label	Value of object identifier for package	Constraints and values	Status	Support	Additional information
1	"CCITT Rec. X.721 (1992) | ISO/IEC 10165-2:1992": topPackage		Mandatory	m		
2	"CCITT Rec. X.721 (1992) | ISO/IEC 10165-2:1992": packagesPackage	{2 9 3 2 4 16}	"any registered package, other than this package has been instantiated"	c57		
3	"CCITT Rec. X.721 (1992) | ISO/IEC 10165-2:1992": allomorphicPackage	{2 9 3 2 4 17}	"if an object supports allomorphism"	c58		
4	linkage-P		Mandatory	m		
5	linkage-ISO9542IS-P	{2 13 0 2 4 22}	"support for ISO 9542 operating as an IS"	o		
6	linkage-ISO9542ES-P	{2 13 0 2 4 21}	"support for ISO 9542 operating as an ES"	o		
7	linkage-ISO9542Checksum-P	{2 13 0 2 4 17}	"support for ISO 9542 PDU Header Checksum Generation function"	o		

Copyright International Organization for Standardization
Provided by IHS under license with ISO
No reproduction or networking permitted without license from IHS
Not for Resale

Table F.24 *(concluded)*

Index	Package template label	Value of object identifier for package	Constraints and values	Status	Support	Additional information
8	linkageInitialMinimumTimer-P	{2 13 0 2 4 7}	"support for the initial minimum timer attribute of the ISO 8473 SNDCF when operating ISO 8473 over an ISO/IEC 8208 or CO Datalink Service"	o		
9	linkageReserveTimer-P	{2 13 0 2 4 6}	"support for the reserve timer attribute of the ISO 8473 SNDCF when operating ISO 8473 over an ISO/IEC 8208 or CO Datalink Service"	o		
10	linkageIdleTimer-P	{2 13 0 2 4 5}	"support for the idle timer attribute of the ISO 8473 SNDCF when operating ISO 8473 over an ISO/IEC 8208 or CO Datalink Service"	o		
11	linkage-ISO8473-ISO8208SNDCF-P	{2 13 0 2 4 4}	"operating ISO 8473 over ISO/IEC 8208"	o		
12	linkageCODLService-P	{2 13 0 2 4 9}	"operating ISO 8473 over the CO Datalink Service"	o		
13	"ISO/IEC 10589:1992": linkageISISBasic-P	{2 13 0 1 4 6}	"the system is an ISO 10589 IS"	o		
14	"ISO/IEC 10589:1992": linkageISISAuthentication-P	{2 13 0 1 4 15}	"the authentication procedures are implemented on an ISO 10589 IS"	o		
15	"ISO/IEC 10589:1992": linkageISISBroadcast-P	{2 13 0 1 4 7}	"the linkage is a broadcast circuit on an ISO 10589 IS"	o		
16	"ISO/IEC 10589:1992": linkageISISDACallEstablishmentMetricIncrement-P	{2 13 0 1 4 9}	"the linkage is a DA Circuit and support is implemented for call establishment metric increment values greater than zero on an ISO/IEC 10589 IS"	o		
17	"ISO/IEC 10589:1992": linkageISISPtToPt-P	{2 13 0 1 4 8}	"the linkage is a point to point circuit on an ISO 10589 IS"	o		
18	"ISO/IEC 10589:1992": linkageISISStatic-P	{2 13 0 1 4 11}	"the linkage is an X.25 static circuit (IN or OUT) on an ISO 10589 IS"	o		
19	"ISO/IEC 10589:1992": linkageISISLevel2-P	{2 13 0 1 4 13}	"the system is an ISO 10589 level 2 IS"	o		
20	"ISO/IEC 10589:1992": linkageISISlevel2Broadcast-P	{2 13 0 1 4 14}	"the linkage is a broadcast circuit on an ISO 10589 level 2 IS"	o		
c57: if F.24/3a or F.24/5a or F.24/6a or F.24/7a or F.24/8a or F.24/9a or F.24/10a or F.24/11a or F.24/12a or F.24/13a or F.24/14a or F.24/15a or F.24/16a or F.24/17a or F.24/18a or F.24/19a or F.24/20a then m else – c58: if F.22/1b then – else m						

F.5.3 Attributes

The supplier of the implementation shall state whether or not the attributes specified by all of the packages instantiated in a managed object of this class are supported, in the Support and Additional information columns of Table F.25. The supplier of the implementation shall indicate support for each of the operations for each attribute supported.

Copyright International Organization for Standardization
Provided by IHS under license with ISO
No reproduction or networking permitted without license from IHS
Not for Resale

Copyright International Organization for Standardization
Provided by IHS under license with ISO
No reproduction or networking permitted without license from IHS
Not for Resale

Table F.25 – linkage Attribute support

				Set by create		Get		Replace		Add		Remove		Set to default		
Index	Attribute template label	Value of object identifier for attribute	Constraints and values	Status	Support	Status	Support	Status	Support	Status	Support	Status	Support	Status	Support	Additional information
1	activeESConfigTimer	{2 13 0 2 7 22}	SEQUENCE	c59		c60		c61		–		–		c61		
2	"CCITT Rec. X.721 (1992) | ISO/IEC 10165-2:1992": administrativeState	{2 9 3 2 7 31}	ENUMERATED	c62		m		m		–		–		c63		
3	"CCITT Rec. X.721 (1992) | ISO/IEC 10165-2:1992": allomorphs	{2 9 3 2 7 50}	SET OF ObjectClass	c64		c65		–		–		–		–		
4	"ISO/IEC 10589:1992": authenticationFailures	{2 13 0 1 7 117}	INTEGER	c66		c67		c68		–		–		c68		
5	"ISO/IEC 10589: 1992": callEstablishmentDefaultMetricIncrement	{2 13 0 1 7 52}	INTEGER	c69		c70		c70		–		–		c70		
6	"ISO/IEC 10589: 1992": callEstablishmentDelayMetricIncrement	{2 13 0 1 7 53}	INTEGER	c69		c70		c70		–		–		c70		
7	"ISO/IEC 10589: 1992": callEstablishmentErrorMetricIncrement	{2 13 0 1 7 55}	INTEGER	c69		c70		c70		–		–		c70		
8	"ISO/IEC 10589: 1992": callEstablishmentExpenseMetricIncrement	{2 13 0 1 7 54}	INTEGER	c69		c70		c70		–		–		c70		
9	callsFailed	{2 13 0 2 7 30}	INTEGER	c71		c72		c73		–		–		c73		
10	callsPlaced	{2 13 0 2 7 29}	INTEGER	c71		c72		c73		–		–		c73		
11	"ISO/IEC 10589: 1992": changesInAdjacencyState	{2 13 0 1 7 40}	INTEGER	c74		c75		c76		–		–		c76		
12	"ISO/IEC 10589: 1993": circuitReceivePasswords	{2 13 0 1 7 116}	SET OF OCTET STRING	c77		c67		c67		c67		c67		c67		
13	"ISO/IEC 10589: 1992": circuitTransmitPassword	{2 13 0 1 7 115}	OCTET STRING	c77		c67		c67		–		–		c67		
14	defaultESConfigTimer	{2 13 0 2 7 21}	SEQUENCE	c78		c60		c60		–		–		c60		

Copyright International Organization for Standardization
Provided by IHS under license with ISO
No reproduction or networking permitted without license from IHS
Not for Resale

Table F.25 *(continued)*

				Set by create		Get		Replace		Add		Remove		Set to default		
Index	Attribute template label	Value of object identifier for attribute	Constraints and values	Status	Support	Status	Support	Status	Support	Status	Support	Status	Support	Status	Support	Additional information
15	eSReachabilityChanges	{2 13 0 2 7 27}	INTEGER	c79		c80		c81		–		–		c81		
16	enableChecksum	{2 13 0 2 7 4}	BOOLEAN	c82		c83		c83		–		–		c83		
17	“ISO/IEC 10589:1992”: externalDomain	{2 13 0 1 7 46}	BOOLEAN	c84		c75		c75		–		–		c75		
18	holdingTimerMultiplier	{2 13 0 2 7 20}	INTEGER	c85		c86		c86		–		–		c86		
19	“ISO/IEC 10589: 1992”: iDFieldLengthMismatches	{2 13 0 1 7 25}	INTEGER	c74		c75		c76		–		–		c76		
20	iSConfigurationTimer	{2 13 0 2 7 24}	SEQUENCE	c87		c80		c80		–		–		c80		
21	“ISO/IEC 10589: 1992”: iSISControlPDUsReceived	{2 13 0 1 7 44}	INTEGER	c74		c75		c76		–		–		c76		
22	“ISO/IEC 10589: 1992”: iSISControlPDUsSent	{2 13 0 1 7 43}	INTEGER	c74		c75		c76		–		–		c76		
23	“ISO/IEC 10589: 1992”: iSISHelloTimer	{2 13 0 1 7 45}	INTEGER	c84		c75		c75		–		–		c75		
24	iSO9542OperationalSubsets	{2 13 0 2 7 115}	BIT STRING	c85		c86		c86		–		–		c88		
25	iSReachabilityChanges	{2 13 0 2 7 23}	INTEGER	c59		c60		c61		–		–		c61		
26	idleTimer	{2 13 0 2 7 31}	SEQUENCE	c89		c90		c90		–		–		c90		
27	initialMinimumTimer	{2 13 0 2 7 33}	SEQUENCE	c91		c92		c92		–		–		c92		
28	“ISO/IEC 10589: 1992”: initializationFailures	{2 13 0 1 7 41}	INTEGER	c74		c75		c76		–		–		c76		
29	invalid9542PDUs	{2 13 0 2 7 101}	INTEGER	c93		c84		c88		–		–		c88		
30	“ISO/IEC 10589: 1992”: l1CircuitID	{2 13 0 1 7 48}	OCTET STRING	c94		c95		c96		–		–		c96		
31	“ISO/IEC 10589: 1992”: l1DefaultMetric	{2 13 0 1 7 35}	INTEGER	c84		c75		c75		–		–		c75		
32	“ISO/IEC 10589: 1992”: l1DelayMetric	{2 13 0 1 7 36}	INTEGER	c84		c75		c75		–		–		c75		
33	“ISO/IEC 10589: 1992”: l1DesignatedIntermediateSystem	{2 13 0 1 7 49}	OCTET STRING	c94		c95		c96		–		–		c96		

Copyright International Organization for Standardization
Provided by IHS under license with ISO
No reproduction or networking permitted without license from IHS
Not for Resale

Table F.25 *(continued)*

				Set by create		Get		Replace		Add		Remove		Set to default		
Index	Attribute template label	Value of object identifier for attribute	Constraints and values	Status	Support	Status	Support	Status	Support	Status	Support	Status	Support	Status	Support	Additional information
34	"ISO/IEC 10589:1992": l1ErrorMetric	{2 13 0 1 7 38}	INTEGER	c84		c75		c75		–		–		c75		
35	"ISO/IEC 10589: 1992": l1ExpenseMetric	{2 13 0 1 7 37}	INTEGER	c84		c75		c75		–		–		c75		
36	"ISO/IEC 10589: 1992": l1IntermediateSystemPriority	{2 13 0 1 7 47}	INTEGER	c97		c95		c95		–		–		c95		
37	"ISO/IEC 10589: 1992": l2CircuitID	{2 13 0 1 7 74}	OCTET STRING	c98		c99		c100		–		–		c100		
38	"ISO/IEC 10589: 1992": l2DefaultMetric	{2 13 0 1 7 68}	INTEGER	c101		c102		c102		–		–		c102		
39	"ISO/IEC 10589: 1992": l2DelayMetric	{2 13 0 1 7 69}	INTEGER	c101		c102		c102		–		–		c102		
40	"ISO/IEC 10589: 1992": l2DesignatedIntermediateSystem	{2 13 0 1 7 75}	OCTET STRING	c98		c99		c100		–		–		c100		
41	"ISO/IEC 10589: 1992": l2ErrorMetric	{2 13 0 1 7 71}	INTEGER	c101		c102		c102		–		–		c102		
42	"ISO/IEC 10589: 1992": l2ExpenseMetric	{2 13 0 1 7 70}	INTEGER	c101		c102		c102		–		–		c102		
43	"ISO/IEC 10589: 1992": l2IntermediateSystemPriority	{2 13 0 1 7 73}	INTEGER	c103		c99		c99		–		–		c99		
44	"ISO/IEC 10589: 1992": lanL1DesignatedIntermediateSystemChanges	{2 13 0 1 7 50}	INTEGER	c94		c95		c96		–		–		c96		
45	"ISO/IEC 10589: 1992": lanL2DesignatedIntermediateSystemChanges	{2 13 0 1 7 76}	INTEGER	c98		c99		c100		–		–		c100		
46	linkageId	{2 13 0 2 7 17}	GraphicString	c104		m		x		–		–		x		
47	manualISSNPAAddress	{2 13 0 2 7 28}	SET OF SEQUENCE	c78		c60		c60		c60		c60		c60		
48	"ISO/IEC 10589: 1992": manualL2OnlyMode	{2 13 0 1 7 72}	BOOLEAN "ISO/IEC 10589: 1992": constraintViolation	c101		c102		c102		–		–		c102		

--`,,```,,,,````-`-`,,`,,`,`,,`---

Copyright International Organization for Standardization
Provided by IHS under license with ISO
No reproduction or networking permitted without license from IHS
Not for Resale

Table F.25 *(continued)*

				Set by create		Get		Replace		Add		Remove		Set to default		
Index	Attribute template label	Value of object identifier for attribute	Constraints and values	Status	Support	Status	Support	Status	Support	Status	Support	Status	Support	Status	Support	Additional information
49	"ISO/IEC 10589: 1992": maximumAreaAddressesMismatches	{2 13 0 1 7 118}	INTEGER	c74		c75		c76		–		–		c76		
50	"CCITT Rec. X.721 (1992) | ISO/IEC 10165-2:1992": nameBinding	{2 9 3 2 7 63}	OBJECT IDENTIFIER	c104		m		x		–		–		x		
51	"CCITT Rec. X.721 (1992) | ISO/IEC 10165-2:1992": objectClass	{2 9 3 2 7 65}	ObjectClass	c62		m		x		–		–		x		
52	operationalProtocols	{2 13 0 2 7 111}	SET OF SEQUENCE	c62		m		c63		–		–		c63		
53	"CCITT Rec. X.721 (1992) | ISO/IEC 10165-2:1992": operationalState	{2 9 3 2 7 35}	ENUMERATED	x		m		x		–		–		x		
54	"ISO/IEC 10589: 1992": outgoingCallIVMO	{2 13 0 1 7 120}	OCTET STRING	c105		c106		c106		–		–		c106		
55	"CCITT Rec. X.721 (1992) | ISO/IEC 10165-2:1992": packages	{2 9 3 2 7 66}	SET OF OBJECT IDENTIFIER	c107		c108		c109		c109		c109		c109		
56	"ISO/IEC 10589: 1992": ptPtCircuitID	{2 13 0 1 7 51}	OCTET STRING	c110		c111		c112		–		–		c112		
57	redirectHoldingTime	{2 13 0 2 7 26}	INTEGER	c87		c80		c80		–		–		c80		
58	"ISO/IEC 10589: 1992": rejectedAdjacencies	{2 13 0 1 7 42}	INTEGER	c74		c75		c76		–		–		c76		
59	reserveTimer	{2 13 0 2 7 32}	SEQUENCE	c113		c114		c114		–		–		c114		
60	sN-SAP	{2 13 0 2 7 18}	ObjectInstance	c115		m		c63		–		–		c63		
61	sN-ServiceProvider	{2 13 0 2 7 19}	ObjectInstance	c62		m		c63		–		–		c63		
62	suggestedESConfigurationTimer	{2 13 0 2 7 25}	SEQUENCE	c87		c80		c80		–		–		c80		
63	"ISO/IEC 10589: 1992": type	{2 13 0 1 7 33}	ENUMERATED	c84		c75		c76		–		–		c76		
64	neighbourSNPAAddress	{2 13 0 1 7 79}	SEQUENCE	c105		c106		c106		–		–		c106		

Copyright International Organization for Standardization
Provided by IHS under license with ISO
No reproduction or networking permitted without license from IHS
Not for Resale

Table F.25 *(continued)*

				Set by create		Get		Replace		Add		Remove		Set to default		
Index	Attribute template label	Value of object identifier for attribute	Constraints and values	Status	Support	Status	Support	Status	Support	Status	Support	Status	Support	Status	Support	Additional information
c59: if F.11/6a and [F.9/1b or (G.1/9a or G.1/11a)] then x else – c60: if F.11/6a then m else – c61: if F.11/6a and F.9/1b then x else – c62: if (G.1/10a or G.1/12a) then m else x c63: if F.9/1b then x else – c64: if F.11/3a then [if (G.1/10a or G.1/12a) then o else x] else – c65: if F.11/3a then m else – c66: if F.11/14a and [F.9/1b or (G.1/9a or G.1/11a)] then x else – c67: if F.11/14a then m else – c68: if F.11/14a and F.9/1b then x else – c69: if F.11/16a then [if (G.1/10a or G.1/12a) then m else x] else – c70: if F.11/16a then m else – c71: if (F.11/11a or F.11/12a) and [F.9/1b or (G.1/9a or G.1/11a)] then x else – c72: if (F.11/11a or F.11/12a) then m else – c73: if (F.11/11a or F.11/12a) and F.9/1b then x else – c74: if F.11/13a and [F.9/1b or (G.1/9a or G.1/11a)] then x else – c75: if F.11/13a then m else – c76: if F.11/13a and F.9/1b then x else – c77: if F.11/14a then [if (G.1/10a or G.1/12a) then m else x] else – c78: if F.11/6a then [if (G.1/10a or G.1/12a) then m else x] else – c79: if F.11/5a and [F.9/1b or (G.1/9a or G.1/11a)] then x else – c80: if F.11/5a then m else – c81: if F.11/5a and F.9/1b then x else – c82: if F.11/7a then [if (G.1/10a or G.1/12a) then m else x] else – c83: if F.11/7a then m else – c84: if F.11/13a then [if (G.1/10a or G.1/12a) then m else x] else – c85: if (F.11/5a or F.11/6a) then [if (G.1/10a or G.1/12a) then m else x] else – c86: if (F.11/5a or F.11/6a) then m else –																

Copyright International Organization for Standardization
Provided by IHS under license with ISO
No reproduction or networking permitted without license from IHS
Not for Resale

Table F.25 *(concluded)*

Index	Attribute template label	Value of object identifier for attribute	Constraints and values	Set by create		Get		Replace		Add		Remove		Set to default		Additional information
				Status	Support	Status	Support	Status	Support	Status	Support	Status	Support	Status	Support	

c87: if F.11/5a then [if (G.1/10a or G.1/12a) then m else x] else –
c88: if (F.11/5a or F.11/6a) and F.9/1b then x else –
c89: if F.11/10a then [if (G.1/10a or G.1/12a) then m else x] else –
c90: if F.11/10a then m else –
c91: if F.11/8a then [if (G.1/10a or G.1/12a) then m else x] else –
c92: if F.11/8a then m else –
c93: if (F.11/5a or F.11/6a) and [F.9/1b or (G.1/9a or G.1/11a)] then x else –
c94: if F.11/15a and [F.9/1b or (G.1/9a or G.1/11a)] then x else –
c95: if F.11/15a then m else –
c96: if F.11/15a and F.9/1b then x else –
c97: if F.11/15a then [if (G.1/10a or G.1/12a) then m else x] else –
c98: if F.11/20a and [F.9/1b or (G.1/9a or G.1/11a)] then x else –
c99: if F.11/20a then m else –
c100: if F.11/20a and F.9/1b then x else –
c101: if F.11/19a then [if (G.1/10a or G.1/12a) then m else x] else –
c102: if F.11/19a then m else –
c103: if F.11/20a then [if (G.1/10a or G.1/12a) then m else x] else –
c104: if (G.1/10a or G.1/12a) then o else x
c105: if F.11/18a then [if (G.1/10a or G.1/12a) then m else x] else –
c106: if F.11/18a then m else –
c107: if F.11/2a then [if (G.1/10a or G.1/12a) then o else x] else –
c108: if F.11/2a then m else –
c109: if F.11/2a then x else –
c110: if (F.11/17a or F.11/18a) and [F.9/1b or (G.1/9a or G.1/11a)] then x else –
c111: if (F.11/17a or F.11/18a) then m else –
c112: if (F.11/17a or F.11/18a) and F.9/1b then x else –
c113: if F.11/9a then m else –
c114: if F.11/9a then [if (G.1/10a or G.1/12a) then m else x] else –
c115: if F.9/1b or (G.1/9a or G.1/11a) then x else –

F.5.4 Attribute group

See Table F.26.

Table F.26 – linkage Attribute group support

				Get		Set to default		
Index	Attribute group template label	Value of object identifier for attribute group	Constraints and values	Status	Support	Status	Support	Additional information
1	"ITU-T Rec. X.723 (1993) | ISO/IEC 10165-5:1994": counters	{2 9 3 5 8 0}	"ISO/IEC 10589:1992": lanL2DesignatedIntermediateSystemChanges	c116		–		
2	"CCITT Rec. X.721 (1992) | ISO/IEC 10165-2:1992": state	{2 9 3 2 8 1}	"CCITT Rec. X.721 (1992) | ISO/IEC 10165-2:1992": administrativeState "CCITT Rec. X.721 (1992) | ISO/IEC 10165-2:1992": operationalState	m		–		
c116: if F.11/5a or F.11/6a or F.11/11a or F.11/12a or F.11/13a or F.11/14a or F.11/15a or F.11/20a then m else –								

Copyright International Organization for Standardization
Provided by IHS under license with ISO
No reproduction or networking permitted without license from IHS
Not for Resale

Copyright International Organization for Standardization
Provided by IHS under license with ISO
No reproduction or networking permitted without license from IHS
Not for Resale

F.5.5 Action

See Table F.27.

Table F.27 – linkage Action support

Index	Action type template label	Value of object identifier for action type	Constraints and values	Status	Support	Additional information	Subindex	Action field name label	Constraints and values	Status	Support	Additional information
1	"ITU-T Rec. X.723 (1993) | ISO/IEC 10165-5:1994": activate	{2 9 3 5 9 0}		m			1.1	ActionInfo	**Information Syntax** SET OF SEQUENCE	m		
							1.1.1	identifier	OBJECT IDENTIFIER	m		
							1.1.2	significance	BOOLEAN	o		
							1.1.3	information	ANY DEFINED BY identifier	m		
							1.2	ActionReply	**Reply Syntax** SET OF SEQUENCE	m		
							1.2.1	identifier	OBJECT IDENTIFIER	m		
							1.2.2	significance	BOOLEAN	o		
							1.2.3	information	ANY DEFINED BY identifier	m		
2	"ITU-T Rec. X.723 (1993) | ISO/IEC 10165-5:1994": deactivate	{2 9 3 5 9 1}		m			2.1	ActionInfo	**Information Syntax** SET OF SEQUENCE	m		
							2.1.1	identifier	OBJECT IDENTIFIER	m		
							2.1.2	significance	BOOLEAN	o		
							2.1.3	information	ANY DEFINED BY identifier	m		
							2.2	ActionReply	**Reply Syntax** SET OF SEQUENCE	m		
							2.2.1	identifier	OBJECT IDENTIFIER	m		
							2.2.2	significance	BOOLEAN	o		
							2.2.3	information	ANY DEFINED BY identifier	m		

Copyright International Organization for Standardization
Provided by IHS under license with ISO
No reproduction or networking permitted without license from IHS
Not for Resale

F.5.6 Notifications

See Table F.28.

Table F.28 – linkage Notification support

					Support									
Index	Notification type template label	Value of object identifier for notification type	Constraints and values	Status	Con-firmed	Non-con-firmed	Additional information	Subindex	Notification field name label	Value of object identifier of attribute type associated with field	Constraints and values	Status	Support	Additional information
1	"CCITT Rec. X.721 (1992) | ISO/IEC 10165-2:1992": communicationsAlarm	{2 9 3 2 10 2}		c117			"ISO/IEC 10589:1992": notificationSystemId	1.1	AlarmInfo		**Information Syntax** SEQUENCE	c117		
								1.1.1	probableCause	{2 9 3 2 7 18}	CHOICE	c:m		
								1.1.1.1	globalValue	–	OBJECT IDENTIFIER	c:o.1		
								1.1.1.2	localValue	–	INTEGER	c:o.1		
								1.1.2	specificProblems	{2 9 3 2 7 27}	SET OF CHOICE	c:o		
								1.1.2.1	OBJECT IDENTIFIER	–	OBJECT IDENTIFIER	c:o.2		
								1.1.2.2	INTEGER	–	INTEGER	c:o.2		
								1.1.3	perceivedSeverity	{2 9 3 2 7 17}	ENUMERATED	c:m		
								1.1.4	backedUpStatus	{2 9 3 2 7 11}	BOOLEAN	c:o		
								1.1.5	backUpObject	{2 9 3 2 7 40}	ObjectInstance	c:o		
								1.1.6	trendIndication	{2 9 3 2 7 30}	ENUMERATED	c:o		
								1.1.7	thresholdInfo	{2 9 3 2 7 29}	SEQUENCE	c:o		
								1.1.7.1	triggeredThreshold	–	AttributeId	c:m		

Copyright International Organization for Standardization
Provided by IHS under license with ISO
No reproduction or networking permitted without license from IHS
Not for Resale

Table F.28 *(continued)*

					Support									
Index	Notification type template label	Value of object identifier for notification type	Constraints and values	Status	Con-firmed	Non-con-firmed	Additional information	Subindex	Notification field name label	Value of object identifier of attribute type associated with field	Constraints and values	Status	Support	Additional information
								1.1.7.2	observedValue	–	CHOICE	c:m		
								1.1.7.2.1	integer	–	INTEGER	c:o.3		
								1.1.7.2.2	real	–	REAL	c:o.3		
								1.1.7.3	thresholdLevel	–	CHOICE	c:o		
								1.1.7.3.1	up	–	SEQUENCE	c:o.4		
								1.1.7.3.1.1	high	–	CHOICE	c:m		
								1.1.7.3.1.1.1	integer	–	INTEGER	c:o.5		
								1.1.7.3.1.1.2	real	–	REAL	c:o.5		
								1.1.7.3.1.2	low	–	CHOICE	c:o		
								1.1.7.3.1.2.1	integer	–	INTEGER	c:o.6		
								1.1.7.3.1.2.2	real	–	REAL	c:o.6		
								1.1.7.3.2	down	–	SEQUENCE	c:o.4		
								1.1.7.3.2.1	high	–	CHOICE	c:m		
								1.1.7.3.2.1.1	integer	–	INTEGER	c:o.7		
								1.1.7.3.2.1.2	real	–	REAL	c:o.7		
								1.1.7.3.2.2	low	–	CHOICE	c:m		
								1.1.7.3.2.2.1	integer	–	INTEGER	c:o.8		
								1.1.7.3.2.2.2	real	–	REAL	c:o.8		
								1.1.7.4	armTime	–	GeneralizedTime	c:o		
								1.1.8	notificationIdentifier	{2 9 3 2 7 16}	INTEGER	c:o		
								1.1.9	correlatedNotifications	{2 9 3 2 7 12}	SET OF SEQUENCE	c:o		
								1.1.9.1	correlatedNotifications	{2 9 3 2 7 12}	SET OF INTEGER	c:m		

Copyright International Organization for Standardization
Provided by IHS under license with ISO
No reproduction or networking permitted without license from IHS
Not for Resale

Table F.28 *(continued)*

					Support									
Index	Notification type template label	Value of object identifier for notification type	Constraints and values	Status	Con-firmed	Non-con-firmed	Additional information	Subindex	Notification field name label	Value of object identifier of attribute type associated with field	Constraints and values	Status	Support	Additional information
								1.1.9.2	sourceObjectInst	–	ObjectInstance	c:o		
								1.1.10	stateChangeDefinition	{2 9 3 2 7 28}	SET OF SEQUENCE	c:o		
								1.1.10.1	attributeID	–	AttributeId	c:m		
								1.1.10.2	oldAttributeValue	–	ANY DEFINED BY attributeID	c:o		
								1.1.10.3	newAttributeValue	–	ANY DEFINED BY attributeID	c:m		
								1.1.11	monitoredAttributes	{2 9 3 2 7 15}	SET OF Attribute	c:o		
								1.1.12	proposedRepairActions	{2 9 3 2 7 19}	SET OF CHOICE	c:o		
								1.1.12.1	OBJECT IDENTIFIER	–	OBJECT IDENTIFIER	c:o.9		
								1.1.12.2	INTEGER	–	INTEGER	c:o.9		
								1.1.13	additionalText	{2 9 3 2 7 7}	GraphicString	c:o		
								1.1.14	additionalInformation	{2 9 3 2 7 6}	SET OF SEQUENCE	c:o		
								1.1.14.1	identifier	–	OBJECT IDENTIFIER	c:m		
								1.1.14.2	significance	–	BOOLEAN	c:o		
								1.1.14.3	information	–	ANY DEFINED BY identifier	c:m		

Copyright International Organization for Standardization
Provided by IHS under license with ISO
No reproduction or networking permitted without license from IHS
Not for Resale

Table F.28 *(continued)*

Index	Notification type template label	Value of object identifier for notification type	Constraints and values	Status	Support: Con-firmed	Support: Non-con-firmed	Additional information	Subindex	Notification field name label	Value of object identifier of attribute type associated with field	Constraints and values	Status	Support	Additional information
2	"ITU-T Rec. X.723 (1993) | ISO/IEC 10165-5:1994": communicationsInformation	{2 9 3 5 10 0}		c118			reachabilityChange "ISO/IEC 10589:1992": notificationDesignatedIntermediateSystemChange	2.1	CommunicationsInformation		**Information Syntax** SEQUENCE	c118		
								2.1.1	informationType	{2 9 3 5 7 5}	OBJECT IDENTIFIER	c:m		
								2.1.2	informationData	{2 9 3 5 7 4}	SET OF SEQUENCE	c:o		
								2.1.2.1	identifier	–	OBJECT IDENTIFIER	c:m		
								2.1.2.2	significance	–	BOOLEAN	c:o		
								2.1.2.3	information	–	ANY DEFINED BY identifier	c:m		
3	"CCITT Rec. X.721 (1992) | ISO/IEC 10165-2:1992": objectCreation	{2 9 3 2 10 6}		m				3.1	ObjectInfo		**Information Syntax** SEQUENCE	m		
								3.1.1	sourceIndicator	{2 9 3 2 7 26}	ENUMERATED	o		
								3.1.2	attributeList	{2 9 3 2 7 9}	SET OF Attribute	o		
								3.1.3	notificationIdentifier	{2 9 3 2 7 16}	INTEGER	o		

Copyright International Organization for Standardization
Provided by IHS under license with ISO
No reproduction or networking permitted without license from IHS
Not for Resale

Table F.28 *(continued)*

					Support									
Index	Notification type template label	Value of object identifier for notification type	Constraints and values	Status	Con-firmed	Non-con-firmed	Additional information	Subindex	Notification field name label	Value of object identifier of attribute type associated with field	Constraints and values	Status	Support	Additional information
								3.1.4	correlatedNotifications	{2 9 3 2 7 12}	SET OF SEQUENCE	o		
								3.1.4.1	correlatedNotifications	{2 9 3 2 7 12}	SET OF INTEGER	c:m		
								3.1.4.2	sourceObjectInst	–	ObjectInstance	c:o		
								3.1.5	additionalText	{2 9 3 2 7 7}	GraphicString	o		
								3.1.6	additionalInformation	{2 9 3 2 7 6}	SET OF SEQUENCE	o		
								3.1.6.1	identifier	–	OBJECT IDENTIFIER	c:m		
								3.1.6.2	significance	–	BOOLEAN	c:o		
								3.1.6.3	information	–	ANY DEFINED BY identifier	c:m		
4	"CCITT Rec. X.721 (1992) | ISO/IEC 10165-2:1992": objectDeletion	{2 9 3 2 10 7}		m				4.1	ObjectInfo		**Information Syntax** SEQUENCE	m		
								4.1.1	sourceIndicator	{2 9 3 2 7 26}	ENUMERATED	o		
								4.1.2	attributeList	{2 9 3 2 7 9}	SET OF Attribute	o		
								4.1.3	notificationIdentifier	{2 9 3 2 7 16}	INTEGER	o		
								4.1.4	correlatedNotifications	{2 9 3 2 7 12}	SET OF SEQUENCE	o		
								4.1.4.1	correlatedNotifications	{2 9 3 2 7 12}	SET OF INTEGER	c:m		

Copyright International Organization for Standardization
Provided by IHS under license with ISO
No reproduction or networking permitted without license from IHS
Not for Resale

Table F.28 *(continued)*

					Support									
Index	Notification type template label	Value of object identifier for notification type	Constraints and values	Status	Con-firmed	Non-con-firmed	Additional information	Subindex	Notification field name label	Value of object identifier of attribute type associated with field	Constraints and values	Status	Support	Additional information
								4.1.4.2	sourceObjectInst	–	ObjectInstance	c:o		
								4.1.5	additionalText	{2 9 3 2 7 7}	GraphicString	o		
								4.1.6	additionalInformation	{2 9 3 2 7 6}	SET OF SEQUENCE	o		
								4.1.6.1	identifier	–	OBJECT IDENTIFIER	c:m		
								4.1.6.2	significance	–	BOOLEAN	c:o		
								4.1.6.3	information	–	ANY DEFINED BY identifier	c:m		
5	"CCITT Rec. X.721 (1992) | ISO/IEC 10165-2:1992": stateChange	{2 9 3 2 10 14}		m				5.1	StateChangeInfo		**Information Syntax** SEQUENCE	m		
								5.1.1	sourceIndicator	{2 9 3 2 7 26}	ENUMERATED	o		
								5.1.2	attributeIdentifierList	{2 9 3 2 7 8}	SET OF AttributeId	o		
								5.1.3	stateChangeDefinition	{2 9 3 2 7 28}	SET OF SEQUENCE	m		
								5.1.3.1	attributeID	–	AttributeId	m		
								5.1.3.2	oldAttributeValue	–	ANY DEFINED BY attributeID	o		
								5.1.3.3	newAttributeValue	–	ANY DEFINED BY attributeID	m		
								5.1.4	notificationIdentifier	{2 9 3 2 7 16}	INTEGER	o		
								5.1.5	correlatedNotifications	{2 9 3 2 7 12}	SET OF SEQUENCE	o		

Copyright International Organization for Standardization
Provided by IHS under license with ISO
No reproduction or networking permitted without license from IHS
Not for Resale

Table F.28 *(concluded)*

Index	Notification type template label	Value of object identifier for notification type	Constraints and values	Status	Support: Con-firmed	Support: Non-con-firmed	Additional information	Subindex	Notification field name label	Value of object identifier of attribute type associated with field	Constraints and values	Status	Support	Additional information
								5.1.5.1	correlatedNotifications	{2 9 3 2 7 12}	SET OF INTEGER	c:m		
								5.1.5.2	sourceObjectInst	–	ObjectInstance	c:o		
								5.1.6	additionalText	{2 9 3 2 7 7}	GraphicString	o		
								5.1.7	additionalInformation	{2 9 3 2 7 6}	SET OF SEQUENCE	o		
								5.1.7.1	identifier	–	OBJECT IDENTIFIER	c:m		
								5.1.7.2	significance	–	BOOLEAN	c:o		
								5.1.7.3	information	–	ANY DEFINED BY identifier	c:m		

c117: if F.24/5a or F.24/6a or F.24/13a or F.24/14a then m else –
c118: if F.24/5a or F.24/6a or F.24/15a then m else –

F.5.7 Parameters

See Table F.29.

Table F.29 – linkage Parameter support

Index	Parameter template label	Value of object identifier for parameter	Constraints and values	Status	Support	Additional information
1	"ISO/IEC 10589:1992": notificationSystemId	{2 13 0 1 5 19}	EVENT-INFO communicationsAlarm	c117		
2	reachabilityChange	{2 13 0 2 5 12}	EVENT-INFO communicationsInformation	c118		
3	"ISO/IEC 10589:1992": notificationDesignatedIntermediateSystemChange	{2 13 0 1 5 24}	EVENT-INFO communicationsInformation	c118		
4	"ISO/IEC 10589:1992": constraintViolation	{2 13 0 1 5 10}	SPECIFIC-ERROR neighbourSNPAAddress	c106		
5	"ISO/IEC 10589:1992": constraintViolation	{2 13 0 1 5 10}	SPECIFIC-ERROR manualL2OnlyMode	c102		

F.6 The NSAP managed object

F.6.1 Statement of conformance to the managed object class

See Table F.30.

Table F.30 –nSAP Managed object class support

Index	Managed object class template label	Value of object identifier for class	Support of all mandatory features? (Y/N)	Is the actual class the same as the managed object class to which conformance is claimed? (Y/N)
1	nSAP	{2 13 0 2 3 4}		

If the answer to the actual class question in Table F.30 is No, the supplier of the implementation shall fill in the actual class support Table F.31.

Table F.31 – nSAP Actual class support

Index	Managed object class template for actual class	Value of object identifier for managed object class definition of actual class	Additional information

Copyright International Organization for Standardization
Provided by IHS under license with ISO
No reproduction or networking permitted without license from IHS
Not for Resale

F.6.2 Packages

The supplier of the implementation shall state whether or not the packages specified by this managed object of this class are supported, in Table F.32.

Table F.32 –nSAP Package support

Index	Package template label	Value of object identifier for package	Constraints and values	Status	Support	Additional information
1	"CCITT Rec. X.721 (1992) | ISO/IEC 10165-2:1992": topPackage		Mandatory	m		
2	"CCITT Rec. X.721 (1992) | ISO/IEC 10165-2:1992": packagesPackage	{2 9 3 2 4 16}	"any registered package, other than this package has been instantiated"	c119		
3	"CCITT Rec. X.721 (1992) | ISO/IEC 10165-2:1992": allomorphicPackage	{2 9 3 2 4 17}	"if an object supports allomorphism"	c120		
4	nSAP-P		Mandatory	m		
5	"ITU-T Rec. X.723 (1993) | ISO/IEC 10165-5:1994": sap2P1		Mandatory	m		
c119: if F.32/3a then m else – c120: if F.30/1b then – else m						

F.6.3 Attributes

The supplier of the implementation shall state whether or not the attributes specified by all of the packages instantiated in a managed object of this class are supported, in the Support and Additional information columns of Table F.33. The supplier of the implementation shall indicate support for each of the operations for each attribute supported.

Copyright International Organization for Standardization
Provided by IHS under license with ISO
No reproduction or networking permitted without license from IHS
Not for Resale

Copyright International Organization for Standardization
Provided by IHS under license with ISO
No reproduction or networking permitted without license from IHS
Not for Resale

Table F.33 – nSAP Attribute support

				Set by create		Get		Replace		Add		Remove		Set to default		
Index	Attribute template label	Value of object identifier for attribute	Constraints and values	Status	Support	Status	Support	Status	Support	Status	Support	Status	Support	Status	Support	Additional information
1	"CCITT Rec. X.721 (1992) | ISO/IEC 10165-2:1992": allomorphs	{2 9 3 2 7 50}	SET OF ObjectClass	c121		c122		–		–		–		–		
2	"CCITT Rec. X.721 (1992) | ISO/IEC 10165-2:1992": nameBinding	{2 9 3 2 7 63}	OBJECT IDENTIFIER	c123		m		x		–		–		x		
3	"CCITT Rec. X.721 (1992) | ISO/IEC 10165-2:1992": objectClass	{2 9 3 2 7 65}	ObjectClass	c124		m		x		–		–		x		
4	"CCITT Rec. X.721 (1992) | ISO/IEC 10165-2:1992": packages	{2 9 3 2 7 66}	SET OF OBJECT IDENTIFIER	c125		c126		c127		c127		c127		c127		
5	"ITU-T Rec. X.723 (1993) | ISO/IEC 10165-5:1994": providerEntityNames	{2 9 3 5 7 7}	SET OF ObjectInstance	c128		m		c129		–		–		c129		
6	"ITU-T Rec. X.723 (1993) | ISO/IEC 10165-5:1994": sap2Address	{2 9 3 5 7 9}	SET OF OCTET STRING	c124		m		c129		c129		c129		c129		
7	"ITU-T Rec. X.723 (1993) | ISO/IEC 10165-5:1994": sapId	{2 9 3 5 7 10}	GraphicString	c123		m		x		–		–		x		
8	"ITU-T Rec. X.723 (1993) | ISO/IEC 10165-5:1994": userEntityNames	{2 9 3 5 7 15}	SET OF ObjectInstance	c128		m		c129		–		–		c129		

c121: if F.32/3a then (if G.1/14a then o else x) else –
c122: if F.32/3a then m else –
c123: if G.1/14a then o else x
c124: if G.1/14a then m else x
c125: if F.32/2a (if G.1/14a then o else x) else –
c126: if F.32/2a then m else –
c127: if F.32/2a then x else –
c128: if F.30/1b or (G.1/13a or G.1/15a) then x else –
c129: if F.30/1b then x else –

Copyright International Organization for Standardization
Provided by IHS under license with ISO
No reproduction or networking permitted without license from IHS
Not for Resale

F.6.4 Notifications

See Table F.34.

Table F.34 – nSAP Notification support

					Support									
Index	Notification type template label	Value of object identifier for notification type	Constraints and values	Status	Con-firmed	Non-con-firmed	Additional information	Subindex	Notification field name label	Value of object identifier of attribute type associated with field	Constraints and values	Status	Support	Additional information
1	"CCITT Rec. X.721 (1992) | ISO/IEC 10165-2:1992": objectCreation	{2 9 3 2 10 6}		m				1.1	ObjectInfo		**Information Syntax** SEQUENCE	m		
								1.1.1	sourceIndicator	{2 9 3 2 7 26}	ENUMERATED	o		
								1.1.2	attributeList	{2 9 3 2 7 9}	SET OF Attribute	o		
								1.1.3	notificationIdentifier	{2 9 3 2 7 16}	INTEGER	o		
								1.1.4	correlatedNotifications	{2 9 3 2 7 12}	SET OF SEQUENCE	o		
								1.1.4.1	correlatedNotifications	{2 9 3 2 7 12}	SET OF INTEGER	c:m		
								1.1.4.2	sourceObjectInst	–	ObjectInstance	c:o		
								1.1.5	additionalText	{2 9 3 2 7 7}	GraphicString	o		
								1.1.6	additionalInformation	{2 9 3 2 7 6}	SET OF SEQUENCE	o		
								1.1.6.1	identifier	–	OBJECT IDENTIFIER	c:m		
								1.1.6.2	significance	–	BOOLEAN	c:o		
								1.1.6.3	information	–	ANY DEFINED BY identifier	c:m		

Copyright International Organization for Standardization
Provided by IHS under license with ISO
No reproduction or networking permitted without license from IHS
Not for Resale

Table F.34 *(concluded)*

					Support									
Index	Notification type template label	Value of object identifier for notification type	Constraints and values	Status	Con-firmed	Non-con-firmed	Additional information	Subindex	Notification field name label	Value of object identifier of attribute type associated with field	Constraints and values	Status	Support	Additional information
2	"CCITT Rec. X.721 (1992) | ISO/IEC 10165-2:1992": objectDeletion	{2 9 3 2 10 7}		m				2.1	ObjectInfo		**Information Syntax** SEQUENCE	m		
								2.1.1	sourceIndicator	{2 9 3 2 7 26}	ENUMERATED	o		
								2.1.2	attributeList	{2 9 3 2 7 9}	SET OF Attribute	o		
								2.1.3	notificationIdentifier	{2 9 3 2 7 16}	INTEGER	o		
								2.1.4	correlatedNotifications	{2 9 3 2 7 12}	SET OF SEQUENCE	o		
								2.1.4.1	correlatedNotifications	{2 9 3 2 7 12}	SET OF INTEGER	c:m		
								2.1.4.2	sourceObjectInst	–	ObjectInstance	c:o		
								2.1.5	additionalText	{2 9 3 2 7 7}	GraphicString	o		
								2.1.6	additionalInformation	{2 9 3 2 7 6}	SET OF SEQUENCE	o		
								2.1.6.1	identifier	–	OBJECT IDENTIFIER	c:m		
								2.1.6.2	significance	–	BOOLEAN	c:o		
								2.1.6.3	information	–	ANY DEFINED BY identifier	c:m		

F.7 The network connection managed object

F.7.1 Statement of conformance to the managed object class

See Table F.35.

Table F.35 – networkConnection Managed object class support

Index	Managed object class template label	Value of object identifier for class	Support of all mandatory features? (Y/N)	Is the actual class the same as the managed object class to which conformance is claimed? (Y/N)
1	networkConnection	{2 13 0 2 3 13}		

If the answer to the actual class question in Table F.35 is No, the supplier of the implementation shall fill in the actual class support Table F.36.

Table F.36 – networkConnection Actual class support

Index	Managed object class template for actual class	Value of object identifier for managed object class definition of actual class	Additional information

F.7.2 Packages

The supplier of the implementation shall state whether or not the packages specified by this managed object of this class are supported, in Table F.37.

Table F.37 – networkConnection Package support

Index	Package template label	Value of object identifier for package	Constraints and values	Status	Support	Additional information
1	"CCITT Rec. X.721 (1992) | ISO/IEC 10165-2:1992": topPackage		Mandatory	m		
2	"CCITT Rec. X.721 (1992) | ISO/IEC 10165-2:1992": packagesPackage	{2 9 3 2 4 16}	"any registered package, other than this package has been instantiated"	c130		
3	"CCITT Rec. X.721 (1992) | ISO/IEC 10165-2:1992": allomorphicPackage	{2 9 3 2 4 17}	"if an object supports allomorphism"	c131		
4	networkConnection-P		Mandatory	m		
5	"ITU-T Rec. X.723 (1993) | ISO/IEC 10165-5:1994": singlePeerConnectionP1		Mandatory	m		
6	"ITU-T Rec. X.723 (1993) | ISO/IEC 10165-5:1994": singlePeerConnectionP2	{2 9 3 5 4 2}	"The names of the connections supported by this connection can be provided"	o		

c130: if F.37/3a or F.37/6a then m else –
c131: f F.35/1b then – else m

F.7.3 Attributes

The supplier of the implementation shall state whether or not the attributes specified by all of the packages instantiated in a managed object of this class are supported, in the Support and Additional information columns of Table F.38. The supplier of the implementation shall indicate support for each of the operations for each attribute supported.

Copyright International Organization for Standardization
Provided by IHS under license with ISO
No reproduction or networking permitted without license from IHS
Not for Resale

Copyright International Organization for Standardization
Provided by IHS under license with ISO
No reproduction or networking permitted without license from IHS
Not for Resale

Table F.38 – networkConnection Attribute support

				Set by create		Get		Replace		Add		Remove		Set to default		
Index	Attribute template label	Value of object identifier for attribute	Constraints and values	Status	Support	Status	Support	Status	Support	Status	Support	Status	Support	Status	Support	Additional information
1	"CCITT Rec. X.721 (1992) | ISO/IEC 10165-2:1992": allomorphs	{2 9 3 2 7 50}	SET OF ObjectClass	c132		c133		–		–		–		–		
2	"ITU-T Rec. X.723 (1993) | ISO/IEC 10165-5:1994": connectionId	{2 9 3 5 7 1}	GraphicString	x		m		x		–		–		x		
3	localNSAPMO	{2 13 0 2 7 106}	ObjectInstance	x		m		c134		–		–		c134		
4	"CCITT Rec. X.721 (1992) | ISO/IEC 10165-2:1992": nameBinding	{2 9 3 2 7 63}	OBJECT IDENTIFIER	x		m		x		–		–		x		
5	"CCITT Rec. X.721 (1992) | ISO/IEC 10165-2:1992": objectClass	{2 9 3 2 7 65}	ObjectClass	x		m		x		–		–		x		
6	"CCITT Rec. X.721 (1992) | ISO/IEC 10165-2:1992": packages	{2 9 3 2 7 66}	SET OF OBJECT IDENTIFIER	c135		c136		c135		c135		c135		c135		
7	remoteNSAPAddress	{2 13 0 2 7 107}	OCTET STRING	x		m		c134		–		–		c134		
8	"ITU-T Rec. X.723 (1993) | ISO/IEC 10165-5:1994": supportedConnectionNames	{2 9 3 5 7 12}	SET OF ObjectInstance	c137		c138		c139		c139		c139		c139		
9	"ITU-T Rec. X.723 (1993) | ISO/IEC 10165-5:1994": underlyingConnectionNames	{2 9 3 5 7 14}	SET OF ObjectInstance	x		m		c134		c134		c134		c134		

c132: if F.37/3a then x else –
c133: if F.37/3a then m else –
c134: if F.35/1b then x else –
c135: if F.37/2a then x else –
c136: if F.37/2a then m else –
c137: if F.37/6a then x else –
c138: if F.37/6a then m else –
c139: if F.37/6a and F.35/1b then x else –

--`,,```,,,,````-`-`,,`,,`,`,,`---

Copyright International Organization for Standardization
Provided by IHS under license with ISO
No reproduction or networking permitted without license from IHS

F.7.4 Action

See Table F.39.

Table F.39 – networkConnection Action support

Index	Action type template label	Value of object identifier for action type	Constraints and values	Status	Support	Additional information	Subindex	Action field name label	Constraints and values	Status	Support	Additional information
1	"ITU-T Rec. X.723 (1993) | ISO/IEC 10165-5:1994": deactivate	{2 9 3 5 9 1}		m			1.1	ActionInfo	**Information Syntax** SET OF SEQUENCE	m		
							1.1.1	identifier	OBJECT IDENTIFIER	m		
							1.1.2	significance	BOOLEAN	o		
							1.1.3	information	ANY DEFINED BY identifier	m		
							1.2	ActionReply	**Reply Syntax** SET OF SEQUENCE	m		
							1.2.1	identifier	OBJECT0 IDENTIFIER	m		
							1.2.2	significance	BOOLEAN	o		
							1.2.3	information	ANY DEFINED BY identifier	m		

Not for Resale

Copyright International Organization for Standardization
Provided by IHS under license with ISO
No reproduction or networking permitted without license from IHS
Not for Resale

F.7.5 Notifications

See Table F.40.

Table F.40 – networkConnection Notification support

					Support									
Index	Notification type template label	Value of object identifier for notification type	Constraints and values	Status	Con-firmed	Non-con-firmed	Additional information	Subindex	Notification field name label	Value of object identifier of attribute type associated with field	Constraints and values	Status	Support	Additional information
1	"ITU-T Rec. X.723 (1993) | ISO/IEC 10165-5:1994": communicationsInformation	{2 9 3 5 10 0}		m				1.1	CommunicationsInformation		**Information Syntax** SEQUENCE	m		
								1.1.1	informationType	{2 9 3 5 7 5}	OBJECT IDENTIFIER	m		
								1.1.2	informationData	{2 9 3 5 7 4}	SET OF SEQUENCE	o		
								1.1.2.1	identifier	–	OBJECT IDENTIFIER	c:m		
								1.1.2.2	significance	–	BOOLEAN	c:o		
								1.1.2.3	information	–	ANY DEFINED BY identifier	c:m		
2	"CCITT Rec. X.721 (1992) | ISO/IEC 10165-2:1992": objectCreation	{2 9 3 2 10 6}		m				2.1	ObjectInfo		**Information Syntax** SEQUENCE	m		
								2.1.1	sourceIndicator	{2 9 3 2 7 26}	ENUMERATED	o		
								2.1.2	attributeList	{2 9 3 2 7 9}	SET OF Attribute	o		
								2.1.3	notificationIdentifier	{2 9 3 2 7 16}	INTEGER	o		
								2.1.4	correlatedNotifications	{2 9 3 2 7 12}	SET OF SEQUENCE	o		
								2.1.4.1	correlatedNotifications	{2 9 3 2 7 12}	SET OF INTEGER	c:m		
								2.1.4.2	sourceObjectInst	–	ObjectInstance	c:o		

--`,,```,,,,````-`-`,,`,,`,`,,`---

Copyright International Organization for Standardization
Provided by IHS under license with ISO
No reproduction or networking permitted without license from IHS
Not for Resale

Table F.40 *(concluded)*

Index	Notification type template label	Value of object identifier for notification type	Constraints and values	Status	Support: Con-firmed	Support: Non-con-firmed	Additional information	Subindex	Notification field name label	Value of object identifier of attribute type associated with field	Constraints and values	Status	Support	Additional information
								2.1.5	additionalText	{2 9 3 2 7 7}	GraphicString	o		
								2.1.6	additionalInformation	{2 9 3 2 7 6}	SET OF SEQUENCE	o		
								2.1.6.1	identifier	–	OBJECT IDENTIFIER	c:m		
								2.1.6.2	significance	–	BOOLEAN	c:o		
								2.1.6.3	information	–	ANY DEFINED BY identifier	c:m		
3	"CCITT Rec. X.721 (1992) | ISO/IEC 10165-2:1992": objectDeletion	{2 9 3 2 10 7}		m				3.1	ObjectInfo		**Information Syntax** SEQUENCE	m		
								3.1.1	sourceIndicator	{2 9 3 2 7 26}	ENUMERATED	o		
								3.1.2	attributeList	{2 9 3 2 7 9}	SET OF Attribute	o		
								3.1.3	notificationIdentifier	{2 9 3 2 7 16}	INTEGER	o		
								3.1.4	correlatedNotifications	{2 9 3 2 7 12}	SET OF SEQUENCE	o		
								3.1.4.1	correlatedNotifications	{2 9 3 2 7 12}	SET OF INTEGER	c:m		
								3.1.4.2	sourceObjectInst	–	ObjectInstance	c:o		
								3.1.5	additionalText	{2 9 3 2 7 7}	GraphicString	o		
								3.1.6	additionalInformation	{2 9 3 2 7 6}	SET OF SEQUENCE	o		
								3.1.6.1	identifier	–	OBJECT IDENTIFIER	c:m		
								3.1.6.2	significance	–	BOOLEAN	c:o		
								3.1.6.3	information	–	ANY DEFINED BY identifier	c:m		

--`,,```,,,,````-`-`,,`,,`,`,,`---

F.8 The network entity managed object

F.8.1 Statement of conformance to the managed object class

See Table F.41.

Table F.41 – networkEntity Managed object class support

Index	Managed object class template label	Value of object identifier for class	Support of all mandatory features? (Y/N)	Is the actual class the same as the managed object class to which conformance is claimed? (Y/N)
1	networkEntity	{2 13 0 2 3 22}		

If the answer to the actual class question in Table F.41 is No, the supplier of the implementation shall fill in the actual class support Table F.42.

Table F.42 – networkEntity Actual class support

Index	Managed object class template for actual class	Value of object identifier for managed object class definition of actual class	Additional information

F.8.2 Packages

The supplier of the implementation shall state whether or not the packages specified by this managed object of this class are supported, in Table F.43.

Table F.43 – networkEntity Package support

Index	Package template label	Value of object identifier for package	Constraints and values	Status	Support	Additional information
1	"CCITT Rec. X.721 (1992) | ISO/IEC 10165-2:1992": topPackage		Mandatory	m		
2	"CCITT Rec. X.721 (1992) | ISO/IEC 10165-2:1992": packagesPackage	{2 9 3 2 4 16}	"any registered package, other than this package has been instantiated"	c140		
3	"CCITT Rec. X.721 (1992) | ISO/IEC 10165-2:1992": allomorphicPackage	{2 9 3 2 4 17}	"if an object supports allomorphism"	c141		
4	networkEntity-P		Mandatory	m		
5	"ITU-T Rec. X.723 (1993) | ISO/IEC 10165-5:1994": communicationsEn-tityP1		Mandatory	m		
c140: if F.43/3a then m else – c141: if F.41/1b then – else m						

F.8.3 Attributes

The supplier of the implementation shall state whether or not the attributes specified by all of the packages instantiated in a managed object of this class are supported, in the Support and Additional information columns of Table F.44. The supplier of the implementation shall indicate support for each of the operations for each attribute supported.

Copyright International Organization for Standardization
Provided by IHS under license with ISO
No reproduction or networking permitted without license from IHS
Not for Resale

Copyright International Organization for Standardization
Provided by IHS under license with ISO
No reproduction or networking permitted without license from IHS
Not for Resale

Table F.44 – networkEntity Attribute support

				Set by create		Get		Replace		Add		Remove		Set to default		
Index	Attribute template label	Value of object identifier for attribute	Constraints and values	Status	Support	Status	Support	Status	Support	Status	Support	Status	Support	Status	Support	Additional information
1	"CCITT Rec. X.721 (1992) | ISO/IEC 10165-2:1992": allomorphs	{2 9 3 2 7 50}	SET OF ObjectClass	c142		c143		–		–		–		–		
2	"ITU-T Rec. X.723 (1993) | ISO/IEC 10165-5:1994": communicationsEntityId	{2 9 3 5 7 0}	GraphicString	c144		m		x		–		–		x		
3	"ITU-T Rec. X.723 (1993) | ISO/IEC 10165-5:1994": localSapNames	{2 9 3 5 7 6}	SET OF ObjectInstance	c145		m		c146		c146		c146		c146		
4	"CCITT Rec. X.721 (1992) | ISO/IEC 10165-2:1992": nameBinding	{2 9 3 2 7 63}	OBJECT IDENTIFIER	c144		m		x		–		–		x		
8	networkEntityTitles	{2 13 0 2 7 3}	SET OF OCTET STRING	c147		m		m		m		m		c146		
5	"CCITT Rec. X.721 (1992) | ISO/IEC 10165-2:1992": objectClass	{2 9 3 2 7 65}	ObjectClass	c147		m		x		–		–		x		
6	"CCITT Rec. X.721 (1992) | ISO/IEC 10165-2:1992": operationalState	{2 9 3 2 7 35}	ENUMERATED	x		m		x		–		–		x		
7	"CCITT Rec. X.721 (1992) | ISO/IEC 10165-2:1992": packages	{2 9 3 2 7 66}	SET OF OBJECT IDENTIFIER	c148		c149		c150		c150		c150		c150		
8	systemType	{2 13 0 2 7 108}	SET OF ENUMERATED	c145		m		c146		–		–		c146		

c142: if F.43/3a then (if G.1/19a then o else x) else –
c143: if F.43/3a then m else –
c144: if G.1/19a then o else x
c145: if F.41/1b or (G.1/18a or G.1/20a) then x else –
c146: if F.41/1b then x else –
c147: if G.1/19a then m else x
c148: if F.43/2a then (if G.1/19a then o else x) else –
c149: if F.43/2a then m else –
c150: if F.43/2a then x else –

Copyright International Organization for Standardization
Provided by IHS under license with ISO
No reproduction or networking permitted without license from IHS
Not for Resale

F.8.4 Notification

See Table F.45.

Table F.45 – networkEntity Notification support

Index	Notification type template label	Value of object identifier for notification type	Constraints and values	Status	Support: Con-firmed	Support: Non-con-firmed	Additional information	Subindex	Notification field name label	Value of object identifier of attribute type associated with field	Constraints and values	Status	Support	Additional information
1	"CCITT Rec. X.721 (1992) | ISO/IEC 10165-2:1992": objectCreation	{2 9 3 2 10 6}		m				1.1	ObjectInfo		**Information Syntax** SEQUENCE	m		
								1.1.1	sourceIndicator	{2 9 3 2 7 26}	ENUMERATED	o		
								1.1.2	attributeList	{2 9 3 2 7 9}	SET OF Attribute	o		
								1.1.3	notificationIdentifier	{2 9 3 2 7 16}	INTEGER	o		
								1.1.4	correlatedNotifications	{2 9 3 2 7 12}	SET OF SEQUENCE	o		
								1.1.4.1	correlatedNotifications	{2 9 3 2 7 12}	SET OF INTEGER	c:m		
								1.1.4.2	sourceObjectInst	–	ObjectInstance	c:o		
								1.1.5	additionalText	{2 9 3 2 7 7}	GraphicString	o		
								1.1.6	additionalInformation	{2 9 3 2 7 6}	SET OF SEQUENCE	o		
								1.1.6.1	identifier	–	OBJECT IDENTIFIER	c:m		
								1.1.6.2	significance	–	BOOLEAN	c:o		
								1.1.6.3	information	–	ANY DEFINED BY identifier	c:m		

Copyright International Organization for Standardization
Provided by IHS under license with ISO
No reproduction or networking permitted without license from IHS
Not for Resale

Table F.45 *(concluded)*

					Support									
Index	Notification type template label	Value of object identifier for notification type	Constraints and values	Status	Con-firmed	Non-con-firmed	Additional information	Subindex	Notification field name label	Value of object identifier of attribute type associated with field	Constraints and values	Status	Support	Additional information
2	"CCITT Rec. X.721 (1992) | ISO/IEC 10165-2:1992": objectDeletion	{2 9 3 2 10 7}		m				2.1	ObjectInfo		**Information Syntax** SEQUENCE	m		
								2.1.1	sourceIndicator	{2 9 3 2 7 26}	ENUMERATED	o		
								2.1.2	attributeList	{2 9 3 2 7 9}	SET OF Attribute	o		
								2.1.3	notificationIdentifier	{2 9 3 2 7 16}	INTEGER	o		
								2.1.4	correlatedNotifications	{2 9 3 2 7 12}	SET OF SEQUENCE	o		
								2.1.4.1	correlatedNotifications	{2 9 3 2 7 12}	SET OF INTEGER	c:m		
								2.1.4.2	sourceObjectInst	–	ObjectInstance	c:o		
								2.1.5	additionalText	{2 9 3 2 7 7}	GraphicString	o		
								2.1.6	additionalInformation	{2 9 3 2 7 6}	SET OF SEQUENCE	o		
								2.1.6.1	identifier	–	OBJECT IDENTIFIER	c:m		
								2.1.6.2	significance	–	BOOLEAN	c:o		
								2.1.6.3	information	–	ANY DEFINED BY identifier	c:m		

F.9 The network subsystem managed object

F.9.1 Statement of conformance to the managed object class

See Table F.46.

Table F.46 – networkSubsystem Managed object class support

Index	Managed object class template label	Value of object identifier for class	Support of all mandatory features? (Y/N)	Is the actual class the same as the managed object class to which conformance is claimed? (Y/N)
1	networkSubsystem	{2 13 0 2 3 1}		

If the answer to the actual class question in Table F.46 is No, the supplier of the implementation shall fill in the actual class support Table F.47.

Table F.47 – networkSubsystem Actual class support

Index	Managed object class template for actual class	Value of object identifier for managed object class definition of actual class	Additional information

F.9.2 Packages

The supplier of the implementation shall state whether or not the packages specified by this managed object of this class are supported, in Table F.48.

Table F.48 – networkSubsystem Package support

Index	Package template label	Value of object identifier for package	Constraints and values	Status	Support	Additional information
1	"CCITT Rec. X.721 (1992) | ISO/IEC 10165-2:1992": topPackage		Mandatory	m		
2	"CCITT Rec. X.721 (1992) | ISO/IEC 10165-2:1992": packagesPackage	{2 9 3 2 4 16}	"any registered package, other than this package has been instantiated"	c151		
3	"CCITT Rec. X.721 (1992) | ISO/IEC 10165-2:1992": allomorphicPackage	{2 9 3 2 4 17}	"if an object supports allomorphism"	c152		
4	networkSubsystem-P		Mandatory	m		
5	"ITU-T Rec. X.723 (1993) | ISO/IEC 10165-5:1994": subsystemP1		Mandatory	m		
c151: if F.48/3a then m else – c152: if F.46/1b then – else m						

F.9.3 Attributes

The supplier of the implementation shall state whether or not the attributes specified by all of the packages instantiated in a managed object of this class are supported, in the Support and Additional information columns of Table F.49. The supplier of the implementation shall indicate support for each of the operations for each attribute supported.

Copyright International Organization for Standardization
Provided by IHS under license with ISO
No reproduction or networking permitted without license from IHS
Not for Resale

Copyright International Organization for Standardization
Provided by IHS under license with ISO
No reproduction or networking permitted without license from IHS
Not for Resale

Table F.49 – networkSubsystem Attribute support

				Set by create		Get		Replace		Add		Remove		Set to default		
Index	Attribute template label	Value of object identifier for attribute	Constraints and values	Status	Support	Status	Support	Status	Support	Status	Support	Status	Support	Status	Support	Additional information
1	"CCITT Rec. X.721 (1992) | ISO/IEC 10165-2:1992": allomorphs	{2 9 3 2 7 50}	SET OF ObjectClass	c153		c154		–		–		–		–		
2	"CCITT Rec. X.721 (1992) | ISO/IEC 10165-2:1992": nameBinding	{2 9 3 2 7 63}	OBJECT IDENTIFIER	x		m		x		–		–		x		
3	"CCITT Rec. X.721 (1992) | ISO/IEC 10165-2:1992": objectClass	{2 9 3 2 7 65}	ObjectClass	x		m		x		–		–		x		
4	"CCITT Rec. X.721 (1992) | ISO/IEC 10165-2:1992": packages	{2 9 3 2 7 66}	SET OF OBJECT IDENTIFIER	c155		c156		c155		c155		c155		c155		
5	"ITU-T Rec. X.723 (1993) | ISO/IEC 10165-5:1994": subsystemId	{2 9 3 5 7 11}	GraphicString	x		m		x		–		–		x		

c153: if F.48/3a then x else –
c154: if F.48/3a then m else –
c155: if F.48/2a then x else –
c156: if F.48/2a then m else –

F.10 The permanent virtual circuit-DCE managed object

F.10.1 Statement of conformance to the managed object class

See Table F.50.

Table F.50 – permanentVirtualCircuit-DCE Managed object class support

Index	Managed object class template label	Value of object identifier for class	Support of all mandatory features? (Y/N)	Is the actual class the same as the managed object class to which conformance is claimed? (Y/N)
1	permanentVirtualCircuit-DCE	{2 13 0 2 3 30}		

If the answer to the actual class question in Table F.50 is No, the supplier of the implementation shall fill in the actual class support Table F.51.

Table F.51 – permanentVirtualCircuit-DCE Actual class support

Index	Managed object class template for actual class	Value of object identifier for managed object class definition of actual class	Additional information

F.10.2 Packages

The supplier of the implementation shall state whether or not the packages specified by this managed object of this class are supported, in Table F.52.

Table F.52 – permanentVirtualCircuit-DCE Package support

Index	Package template label	Value of object identifier for package	Constraints and values	Status	Support	Additional information
1	"CCITT Rec. X.721 (1992) | ISO/IEC 10165-2:1992": topPackage		Mandatory	m		
2	"CCITT Rec. X.721 (1992) | ISO/IEC 10165-2:1992": packagesPackage	{2 9 3 2 4 16}	"any registered package, other than this package has been instantiated"	c156		
3	"CCITT Rec. X.721 (1992) | ISO/IEC 10165-2:1992": allomorphicPackage	{2 9 3 2 4 17}	"if an object supports allomorphism"	c157		
4	permanentVirtualCircuit-DCE-P		Mandatory	m		
5	dCECommonVirtualCircuitCounters-P	{2 13 0 2 4 23}	"the instance supports the dCECommonVirtualCircuitCounters capabilities"	o		
6	virtualCircuit-P		Mandatory	m		
c156: if F.52/3a or F.52/5a then m else – c157: if F.50/1b then – else m						

F.10.3 Attributes

The supplier of the implementation shall state whether or not the attributes specified by all of the packages instantiated in a managed object of this class are supported, in the Support and Additional information columns of Table F.53. The supplier of the implementation shall indicate support for each of the operations for each attribute supported.

Copyright International Organization for Standardization
Provided by IHS under license with ISO
No reproduction or networking permitted without license from IHS
Not for Resale

Copyright International Organization for Standardization
Provided by IHS under license with ISO
No reproduction or networking permitted without license from IHS
Not for Resale

Table F.53 – permanentVirtualCircuit-DCE Attribute support

				Set by create		Get		Replace		Add		Remove		Set to default		
Index	Attribute template label	Value of object identifier for attribute	Constraints and values	Status	Support	Status	Support	Status	Support	Status	Support	Status	Support	Status	Support	Additional information
1	"CCITT Rec. X.721 (1992) | ISO/IEC 10165-2:1992": allomorphs	{2 9 3 2 7 50}	SET OF ObjectClass	c158		c159		–		–		–		–		
2	chargingDirection	{2 13 0 2 7 131}	BOOLEAN	c160		m		c160		–		–		c160		
3	dataPacketsReceived	{2 13 0 2 7 51}	INTEGER	c161		c162		c161		–		–		c161		
4	dataPacketsSent	{2 13 0 2 7 50}	INTEGER	c161		c162		c161		–		–		c161		
5	interruptPacketsReceived	{2 13 0 2 7 68}	INTEGER	c161		c162		c161		–		–		c161		
6	interruptPacketsSent	{2 13 0 2 7 67}	INTEGER	c161		c162		c161		–		–		c161		
7	interruptTimerExpiries	{2 13 0 2 7 69}	INTEGER	c161		c162		c161		–		–		c161		
8	logicalChannel	{2 13 0 2 7 89}	INTEGER	m		m		c160		–		–		c160		
9	"CCITT Rec. X.721 (1992) | ISO/IEC 10165-2:1992": nameBinding	{2 9 3 2 7 63}	OBJECT IDENTIFIER	o		m		x		–		–		x		
10	"CCITT Rec. X.721 (1992) | ISO/IEC 10165-2:1992": objectClass	{2 9 3 2 7 65}	ObjectClass	m		m		x		–		–		x		
11	"CCITT Rec. X.721 (1992) | ISO/IEC 10165-2:1992": octetsReceivedCounter	{2 9 3 2 7 78}	INTEGER	c161		c162		c161		–		–		c161		
12	"CCITT Rec. X.721 (1992) | ISO/IEC 10165-2:1992": octetsSentCounter	{2 9 3 2 7 80}	INTEGER	c161		c162		c161		–		–		c161		
13	"CCITT Rec. X.721 (1992) | ISO/IEC 10165-2:1992": operationalState	{2 9 3 2 7 35}	ENUMERATED	x		m		x		–		–		x		
14	"CCITT Rec. X.721 (1992) | ISO/IEC 10165-2:1992": packages	{2 9 3 2 7 66}	SET OF OBJECT IDENTIFIER	c163		c164		c165		c165		c165		c165		

Copyright International Organization for Standardization
Provided by IHS under license with ISO
No reproduction or networking permitted without license from IHS
Not for Resale

Table F.53 *(concluded)*

Index	Attribute template label	Value of object identifier for attribute	Constraints and values	Set by create		Get		Replace		Add		Remove		Set to default		Additional information
				Status	Support	Status	Support	Status	Support	Status	Support	Status	Support	Status	Support	
15	packetSizes	{2 13 0 2 7 121}	SEQUENCE	m		m		c160		–		–		c160		
16	providerInitiatedDisconnects	{2 13 0 2 7 54}	INTEGER	c161		c162		c161		–		–		c161		
17	providerInitiatedResets	{2 13 0 2 7 59}	INTEGER	c161		c162		c161		–		–		c161		
18	remoteDTEAddress	{2 13 0 2 7 93}	SEQUENCE	c160		m		c160		–		–		c160		
19	remoteLogicalChannel	{2 13 0 2 7 162}	INTEGER	c160		m		c160		–		–		c160		
20	remotelyInitiatedResets	{2 13 0 2 7 57}	INTEGER	c161		c162		c161		–		–		c161		
21	remotelyInitiatedRestarts	{2 13 0 2 7 61}	INTEGER	c161		c162		c161		–		–		c161		
22	resetTimeouts	{2 13 0 2 7 60}	INTEGER	c161		c162		c161		–		–		c161		
23	throughputClasses	{2 13 0 2 7 96}	SEQUENCE	m		m		c160		–		–		c160		
24	virtualCircuitId	{2 13 0 2 7 116}	GraphicString	o		m		x		–		–		x		
25	windowSizes	{2 13 0 2 7 124}	SEQUENCE	m		m		c160		–		–		c160		
26	x25SegmentsReceived	{2 13 0 2 7 171}	INTEGER	c161		c162		c161		–		–		c161		
27	x25SegmentsSent	{2 13 0 2 7 170}	INTEGER	c161		c162		c161		–		–		c161		

c158: if F.52/3a then o else –
c159: if F.52/3a then m else –
c160: if F.50/1b then x else –
c161: if F52/5a and F.50/1b then x else –
c162: if F.52/5a then m else –
c163: if F.52/2a then o else –
c164: if F.52/2a then m else –
c165: if F.52/2a then x else –

F.10.4 Attribute Groups

See Table F.54.

Table F.54 – permanentVirtualCircuit-DCE Attribute group support

				Get		Set to default		
Index	Attribute group template label	Value of object identifier for attribute group	Constraints and values	Status	Support	Status	Support	Additional information
1	"ITU-T Rec. X.723 (1993) | ISO/IEC 10165-5:1994" counters	{2 9 3 5 8 0}	dataPacketsReceived dataPacketsSent interruptPacketsReceived interruptPacketsSent interruptTimerExpiries "CCITT Rec. X.721 (1992) | ISO/IEC 10165-2:1992": octetsReceivedCounter "CCITT Rec. X.721 (1992) | ISO/IEC 10165-2:1992": octetsSentCounter providerInitiatedDisconnects providerInitiatedResets remotelyInitiatedResets remotelyInitiatedRestart resetTimeouts x25SegmentsReceived x25SegmentsSent	c162		–		
2	"CCITT Rec. X.721 (1992) | ISO/IEC 10165-2:1992": state	{2 9 3 2 8 1}	"CCITT Rec. X.721 (1992) | ISO/IEC 10165-2:1992": operationalState	m		–		

Copyright International Organization for Standardization
Provided by IHS under license with ISO
No reproduction or networking permitted without license from IHS
Not for Resale

Copyright International Organization for Standardization
Provided by IHS under license with ISO
No reproduction or networking permitted without license from IHS
Not for Resale

F.10.5 Notifications

See Table F.55.

Table F.55 – permanentVirtualCircuit-DCE Notification support

Index	Notification type template label	Value of object identifier for notification type	Constraints and values	Status	Support: Con-firmed	Support: Non-con-firmed	Additional information	Subindex	Notification field name label	Value of object identifier of attribute type associated with field	Constraints and values	Status	Support	Additional information
1	"CCITT Rec. X.721 (1992) | ISO/IEC 10165-2:1992": objectCreation	{2 9 3 2 10 6}		m				1.1	ObjectInfo		**Information Syntax** SEQUENCE	m		
								1.1.1	sourceIndicator	{2 9 3 2 7 26}	ENUMERATED	o		
								1.1.2	attributeList	{2 9 3 2 7 9}	SET OF Attribute	o		
								1.1.3	notificationIdentifier	{2 9 3 2 7 16}	INTEGER	o		
								1.1.4	correlatedNotifications	{2 9 3 2 7 12}	SET OF SEQUENCE	o		
								1.1.4.1	correlatedNotifications	{2 9 3 2 7 12}	SET OF INTEGER	c:m		
								1.1.4.2	sourceObjectInst	–	ObjectInstance	c:o		
								1.1.5	additionalText	{2 9 3 2 7 7}	GraphicString	o		
								1.1.6	additionalInformation	{2 9 3 2 7 6}	SET OF SEQUENCE	o		
								1.1.6.1	identifier	–	OBJECT IDENTIFIER	c:m		
								1.1.6.2	significance	–	BOOLEAN	c:o		
								1.1.6.3	information	–	ANY DEFINED BY identifier	c:m		

Copyright International Organization for Standardization
Provided by IHS under license with ISO
No reproduction or networking permitted without license from IHS
Not for Resale

Table F.55 *(continued)*

Index	Notification type template label	Value of object identifier for notification type	Constraints and values	Status	Support: Con-firmed	Support: Non-con-firmed	Additional information	Subindex	Notification field name label	Value of object identifier of attribute type associated with field	Constraints and values	Status	Support	Additional information
2	"CCITT Rec. X.721 (1992) | ISO/IEC 10165-2:1992": objectDeletion	{2 9 3 2 10 7}		m				2.1	ObjectInfo		**Information Syntax** SEQUENCE	m		
								2.1.1	sourceIndicator	{2 9 3 2 7 26}	ENUMERATED	o		
								2.1.2	attributeList	{2 9 3 2 7 9}	SET OF Attribute	o		
								2.1.3	notificationIdentifier	{2 9 3 2 7 16}	INTEGER	o		
								2.1.4	correlatedNotifications	{2 9 3 2 7 12}	SET OF SEQUENCE	o		
								2.1.4.1	correlatedNotifications	{2 9 3 2 7 12}	SET OF INTEGER	c:m		
								2.1.4.2	sourceObjectInst	–	ObjectInstance	c:o		
								2.1.5	additionalText	{2 9 3 2 7 7}	GraphicString	o		
								2.1.6	additionalInformation	{2 9 3 2 7 6}	SET OF SEQUENCE	o		
								2.1.6.1	identifier	–	OBJECT IDENTIFIER	c:m		
								2.1.6.2	significance	–	BOOLEAN	c:o		
								2.1.6.3	information	–	ANY DEFINED BY identifier	c:m		

Copyright International Organization for Standardization
Provided by IHS under license with ISO
No reproduction or networking permitted without license from IHS
Not for Resale

Table F.55 *(concluded)*

					Support									
Index	Notification type template label	Value of object identifier for notification type	Constraints and values	Status	Con-firmed	Non-con-firmed	Additional information	Subindex	Notification field name label	Value of object identifier of attribute type associated with field	Constraints and values	Status	Support	Additional information
3	"CCITT Rec. X.721 (1992) | ISO/IEC 10165-2:1992": stateChange	{2 9 3 2 10 14}		m				3.1	StateChangeInfo		**Information Syntax** SEQUENCE	m		
								3.1.1	sourceIndicator	{2 9 3 2 7 26}	ENUMERATED	o		
								3.1.2	attributeIdentifierList	{2 9 3 2 7 8}	SET OF AttributeId	o		
								3.1.3	stateChangeDefinition	{2 9 3 2 7 28}	SET OF SEQUENCE	m		
								3.1.3.1	attributeID	–	AttributeId	m		
								3.1.3.2	oldAttributeValue	–	ANY DEFINED BY attributeID	o		
								3.1.3.3	newAttributeValue	–	ANY DEFINED BY attributeID	m		
								3.1.4	notificationIdentifier	{2 9 3 2 7 16}	INTEGER	o		
								3.1.5	correlatedNotifications	{2 9 3 2 7 12}	SET OF SEQUENCE	o		
								3.1.5.1	correlatedNotifications	{2 9 3 2 7 12}	SET OF INTEGER	c:m		
								3.1.5.2	sourceObjectInst	–	ObjectInstance	c:o		
								3.1.6	additionalText	{2 9 3 2 7 7}	GraphicString	o		
								3.1.7	additionalInformation	{2 9 3 2 7 6}	SET OF SEQUENCE	o		
								3.1.7.1	identifier	–	OBJECT IDENTIFIER	c:m		
								3.1.7.2	significance	–	BOOLEAN	c:o		
								3.1.7.3	information	–	ANY DEFINED BY identifier	c:m		

F.11 The permanent virtual circuit-DTE managed object

F.11.1 Statement of conformance to the managed object class

See Table F.56.

Table F.56 – permanentVirtualCircuit-DTE Managed object class support

Index	Managed object class template label	Value of object identifier for class	Support of all mandatory features? (Y/N)	Is the actual class the same as the managed object class to which conformance is claimed? (Y/N)
1	permanentVirtualCircuit-DTE	{2 13 0 2 3 19}		

If the answer to the actual class question in Table F.56 is No, the supplier of the implementation shall fill in the actual class support Table F.57.

Table F.57 – permanentVirtualCircuit-DTE Actual class support

Index	Managed object class template for actual class	Value of object identifier for managed object class definition of actual class	Additional information

F.11.2 Packages

The supplier of the implementation shall state whether or not the packages specified by this managed object of this class are supported, in Table F.58.

Table F.58 – permanentVirtualCircuit-DTE Package support

Index	Package template label	Value of object identifier for package	Constraints and values	Status	Support	Additional information
1	"CCITT Rec. X.721 (1992) | ISO/IEC 10165-2:1992": topPackage		Mandatory	m		
2	"CCITT Rec. X.721 (1992) | ISO/IEC 10165-2:1992": packagesPackage	{2 9 3 2 4 16}	"any registered package, other than this package has been instantiated"	c166		
3	"CCITT Rec. X.721 (1992) | ISO/IEC 10165-2:1992": allomorphicPackage	{2 9 3 2 4 17}	"if an object supports allomorphism"	cc167		
4	permanentVirtualCircuit-DTE-P		Mandatory	m		
5	dTEVirtualCircuitCounters-P	{2 13 0 2 4 19}	"the instance supports the dTEVirtualCircuitCounters capabilities"	o		
6	virtualCircuit-P		Mandatory	m		
c166: if F.58/3a or F.58/5a then m else – c167: if F56/1b then – else m						

F.11.3 Attributes

The supplier of the implementation shall state whether or not the attributes specified by all of the packages instantiated in a managed object of this class are supported, in the Support and Additional information columns of Table F.59. The supplier of the implementation shall indicate support for each of the operations for each attribute supported.

Copyright International Organization for Standardization
Provided by IHS under license with ISO
No reproduction or networking permitted without license from IHS
Not for Resale

Copyright International Organization for Standardization
Provided by IHS under license with ISO
No reproduction or networking permitted without license from IHS
Not for Resale

Table F.59 – permanentVirtualCircuit-DTE Attribute support

				Set by create		Get		Replace		Add		Remove		Set to default		
Index	Attribute template label	Value of object identifier for attribute	Constraints and values	Status	Support	Status	Support	Status	Support	Status	Support	Status	Support	Status	Support	Additional information
1	"CCITT Rec. X.721 (1992) | ISO/IEC 10165-2:1992": allomorphs	{2 9 3 2 7 50}	SET OF ObjectClass	c168		c169		–		–		–		–		
2	dataPacketsReceived	{2 13 0 2 7 51}	INTEGER	c170		c171		c170		–		–		c170		
3	dataPacketsSent	{2 13 0 2 7 50}	INTEGER	c170		c171		c170		–		–		c170		
4	dataRetransmissionTimerExpiries	{2 13 0 2 7 58}	INTEGER	c170		c171		c170		–		–		c170		
5	interruptPacketsReceived	{2 13 0 2 7 68}	INTEGER	c170		c171		c170		–		–		c170		
6	interruptPacketsSent	{2 13 0 2 7 67}	INTEGER	c170		c171		c170		–		–		c170		
7	interruptTimerExpiries	{2 13 0 2 7 69}	INTEGER	c170		c171		c170		–		–		c170		
8	logicalChannel	{2 13 0 2 7 89}	INTEGER	m		m		c172		–		–		c172		
9	"CCITT Rec. X.721 (1992) | ISO/IEC 10165-2:1992": nameBinding	{2 9 3 2 7 63}	OBJECT IDENTIFIER	o		m		x		–		–		x		
10	"CCITT Rec. X.721 (1992) | ISO/IEC 10165-2:1992": objectClass	{2 9 3 2 7 65}	ObjectClass	m		m		x		–		–		x		
11	"CCITT Rec. X.721 (1992) | ISO/IEC 10165-2:1992": octetsReceivedCounter	{2 9 3 2 7 78}	INTEGER	c170		c171		c170		–		–		c170		
12	"CCITT Rec. X.721 (1992) | ISO/IEC 10165-2:1992": octetsSentCounter	{2 9 3 2 7 80}	INTEGER	c170		c171		c170		–		–		c170		
13	"CCITT Rec. X.721 (1992) | ISO/IEC 10165-2:1992": packages	{2 9 3 2 7 66}	SET OF OBJECT IDENTIFIER	c173		c174		c175		c175		c175		c175		

Copyright International Organization for Standardization
Provided by IHS under license with ISO
No reproduction or networking permitted without license from IHS

Table F.59 *(concluded)*

				Set by create		Get		Replace		Add		Remove		Set to default		
Index	Attribute template label	Value of object identifier for attribute	Constraints and values	Status	Support	Status	Support	Status	Support	Status	Support	Status	Support	Status	Support	Additional information
14	packetSizes	{2 13 0 2 7 121}	SEQUENCE	m		m		c172		–		–		c172		
15	providerInitiatedResets	{2 13 0 2 7 59}	INTEGER	c170		c171		c170		–		–		c170		
16	remotelyInitiatedResets	{2 13 0 2 7 57}	INTEGER	c170		c171		c170		–		–		c170		
17	resetTimeouts	{2 13 0 2 7 60}	INTEGER	c170		c171		c170		–		–		c170		
18	throughputClasses	{2 13 0 2 7 96}	SEQUENCE	m		m		c172		–		–		c172		
19	virtualCircuitId	{2 13 0 2 7 116}	GraphicString	o		m		x		–		–		x		
20	windowSizes	{2 13 0 2 7 124}	SEQUENCE	m		m		c172		–		–		c172		

c168: if F.58/3a then o else –
c169: if F.58/3a then m else –
c170: if F.58/5a and F.56/1b then x else –
c171: if F.58/5a then m else –
c172: if F.56/1b then x else –
c173: if F.58/2a then o else –
c174: if F.58/2a then m else –
c175: if F.58/2a then x else –

Not for Resale

--`,,```,,,,````-`-`,,`,,`,`,,`---

F.11.4 Attribute Groups

See Table F.60.

Table F.60 – permanentVirtualCircuit-DTE Attribute group support

				Get		Set to default		
Index	Attribute group template label	Value of object identifier for attribute group	Constraints and values	Status	Support	Status	Support	Additional information
1	"ITU-T Rec. X.723 (1993) | ISO/IEC 10165-5:1994" counters	{2 9 3 5 8 0}	dataPacketsReceived dataPacketsSent dataRetransmissionTimerExpiries interruptPacketsReceived interruptPacketsSent interruptTimerExpiries "CCITT Rec. X.721 (1992) | ISO/IEC 10165-2:1992": octetsReceivedCounter "CCITT Rec. X.721 (1992) | ISO/IEC 10165-2:1992": octetsSentCounter providerInitiatedResets remotelyInitiatedResets resetTimeouts	c171		–		

Copyright International Organization for Standardization
Provided by IHS under license with ISO
No reproduction or networking permitted without license from IHS
Not for Resale

Copyright International Organization for Standardization
Provided by IHS under license with ISO
No reproduction or networking permitted without license from IHS
Not for Resale

F.11.5 Notifications

See Table F.61.

Table F.61 – permanentVirtualCircuit-DTE Notification support

					Support									
Index	Notification type template label	Value of object identifier for notification type	Constraints and values	Status	Con-firmed	Non-con-firmed	Additional information	Subindex	Notification field name label	Value of object identifier of attribute type associated with field	Constraints and values	Status	Support	Additional information
1	"CCITT Rec. X.721 (1992) | ISO/IEC 10165-2:1992": objectCreation	{2 9 3 2 10 6}		m				1.1	ObjectInfo		**Information Syntax** SEQUENCE	m		
								1.1.1	sourceIndicator	{2 9 3 2 7 26}	ENUMERATED	o		
								1.1.2	attributeList	{2 9 3 2 7 9}	SET OF Attribute	o		
								1.1.3	notificationIdentifier	{2 9 3 2 7 16}	INTEGER	o		
								1.1.4	correlatedNotifications	{2 9 3 2 7 12}	SET OF SEQUENCE	o		
								1.1.4.1	correlatedNotifications	{2 9 3 2 7 12}	SET OF INTEGER	c:m		
								1.1.4.2	sourceObjectInst	–	ObjectInstance	c:o		
								1.1.5	additionalText	{2 9 3 2 7 7}	GraphicString	o		
								1.1.6	additionalInformation	{2 9 3 2 7 6}	SET OF SEQUENCE	o		
								1.1.6.1	identifier	–	OBJECT IDENTIFIER	c:m		
								1.1.6.2	significance	–	BOOLEAN	c:o		
								1.1.6.3	information	–	ANY DEFINED BY identifier	c:m		

Copyright International Organization for Standardization
Provided by IHS under license with ISO
No reproduction or networking permitted without license from IHS
Not for Resale

Table F.61 *(concluded)*

					Support									
Index	Notification type template label	Value of object identifier for notification type	Constraints and values	Status	Con-firmed	Non-con-firmed	Additional information	Subindex	Notification field name label	Value of object identifier of attribute type associated with field	Constraints and values	Status	Support	Additional information
2	"CCITT Rec. X.721 (1992) | ISO/IEC 10165-2:1992": objectDeletion	{2 9 3 2 10 7}		m				2.1	ObjectInfo		**Information Syntax** SEQUENCE	m		
								2.1.1	sourceIndicator	{2 9 3 2 7 26}	ENUMERATED	o		
								2.1.2	attributeList	{2 9 3 2 7 9}	SET OF Attribute	o		
								2.1.3	notificationIdentifier	{2 9 3 2 7 16}	INTEGER	o		
								2.1.4	correlatedNotifications	{2 9 3 2 7 12}	SET OF SEQUENCE	o		
								2.1.4.1	correlatedNotifications	{2 9 3 2 7 12}	SET OF INTEGER	c:m		
								2.1.4.2	sourceObjectInst	–	ObjectInstance	c:o		
								2.1.5	additionalText	{2 9 3 2 7 7}	GraphicString	o		
								2.1.6	additionalInformation	{2 9 3 2 7 6}	SET OF SEQUENCE	o		
								2.1.6.1	identifier	–	OBJECT IDENTIFIER	c:m		
								2.1.6.2	significance	–	BOOLEAN	c:o		
								2.1.6.3	information	–	ANY DEFINED BY identifier	c:m		

F.12 The virtual call DCE managed object

F.12.1 Statement of conformance to the managed object class

See Table F.62.

Table F.62 – virtualCall-DCE Managed object class support

Index	Managed object class template label	Value of object identifier for class	Support of all mandatory features? (Y/N)	Is the actual class the same as the managed object class to which conformance is claimed? (Y/N)
1	virtualCall-DCE	{2 13 0 2 3 31}		

If the answer to the actual class question in Table F.62 is No, the supplier of the implementation shall fill in the actual class support Table F.63.

Table F.63 – virtualCall-DCE Actual class support

Index	Managed object class template for actual class	Value of object identifier for managed object class definition of actual class	Additional information

F.12.2 Packages

The supplier of the implementation shall state whether or not the packages specified by this managed object of this class are supported, in Table F.64.

Table F.64 – virtualCall-DCE Package support

Index	Package template label	Value of object identifier for package	Constraints and values	Status	Support	Additional information
1	"CCITT Rec. X.721 (1992) | ISO/IEC 10165-2:1992": topPackage		Mandatory	m		
2	"CCITT Rec. X.721 (1992) | ISO/IEC 10165-2:1992": packagesPackage	{2 9 3 2 4 16}	"any registered package, other than this package has been instantiated"	c176		
3	"CCITT Rec. X.721 (1992) | ISO/IEC 10165-2:1992": allomorphicPackage	{2 9 3 2 4 17}	"if an object supports allomorphism"	c177		
4	virtualCall-DCE-P		Mandatory	m		
5	virtualCircuit-P		Mandatory	m		
6	dCECommonVirtualCircuitCounters-P	{2 13 0 2 4 23}	"the instance supports the dCECommonVirtualCircuitCounters capabilities"	o		
7	dCEVirtualCallFacilities-P	{2 13 0 2 4 24}	"the instance supports the dCEVirtualCallFacilities capabilities"	o		
c176: if F.64/3a or F.64/6a or F.64/7a then m else – c177: if F.621b then – else m						

F.12.3 Attributes

The supplier of the implementation shall state whether or not the attributes specified by all of the packages instantiated in a managed object of this class are supported, in the Support and Additional information columns of Table F.65. The supplier of the implementation shall indicate support for each of the operations for each attribute supported.

Copyright International Organization for Standardization
Provided by IHS under license with ISO
No reproduction or networking permitted without license from IHS
Not for Resale

Copyright International Organization for Standardization
Provided by IHS under license with ISO
No reproduction or networking permitted without license from IHS
Not for Resale

Table F.65 – virtualCall-DCE Attribute support

				Set by create		Get		Replace		Add		Remove		Set to default		
Index	Attribute template label	Value of object identifier for attribute	Constraints and values	Status	Support	Status	Support	Status	Support	Status	Support	Status	Support	Status	Support	Additional information
1	"CCITT Rec. X.721 (1992) | ISO/IEC 10165-2:1992": allomorphs	{2 9 3 2 7 50}	SET OF ObjectClass	c178		c179		–		–		–		–		
2	bilateralCUGSelection	{2 13 0 2 7 126}	BOOLEAN	c180		c181		c182		–		–		c182		
3	cUGSelection	{2 13 0 2 7 135}	BOOLEAN	c183		m		c184		–		–		c184		
4	cUGWithOutgoingAccessSelection	{2 13 0 2 7 138}	BOOLEAN	c180		c181		c182		–		–		c182		
5	callRedirectionDeflectionNotification	{2 13 0 2 7 130}	BOOLEAN	c180		c181		c182		–		–		c182		
6	calledLineAddressModifiedNotification	{2 13 0 2 7 128}	BOOLEAN	c180		c181		c182		–		–		c182		
7	chargingDirection	{2 13 0 2 7 131}	BOOLEAN	c183		m		c184		–		–		c184		
8	dataPacketsReceived	{2 13 0 2 7 51}	INTEGER	c185		c186		c187		–		–		c187		
9	dataPacketsSent	{2 13 0 2 7 50}	INTEGER	c185		c186		c187		–		–		c187		
10	direction	{2 13 0 2 7 92}	ENUMERATED	c183		m		c184		–		–		c184		
11	fastSelect	{2 13 0 2 7 76}	ENUMERATED	c183		m		c184		–		–		c184		
12	interruptPacketsReceived	{2 13 0 2 7 68}	INTEGER	c185		c186		c187		–		–		c187		
13	interruptPacketsSent	{2 13 0 2 7 67}	INTEGER	c185		c186		c187		–		–		c187		
14	interruptTimerExpiries	{2 13 0 2 7 69}	INTEGER	c185		c186		c187		–		–		c187		
15	logicalChannel	{2 13 0 2 7 89}	INTEGER	c183		m		c184		–		–		c184		
16	nUISelection	{2 13 0 2 7 155}	BOOLEAN	c180		c181		c182		–		–		c182		
17	"CCITT Rec. X.721 (1992) | ISO/IEC 10165-2:1992": nameBinding	{2 9 3 2 7 63}	OBJECT IDENTIFIER	c188		m		x		–		–		x		
18	"CCITT Rec. X.721 (1992) | ISO/IEC 10165-2:1992": objectClass	{2 9 3 2 7 65}	ObjectClass	c189		m		x		–		–		x		
19	"CCITT Rec. X.721 (1992) | ISO/IEC 10165-2:1992": octetsReceivedCounter	{2 9 3 2 7 78}	INTEGER	c185		c186		c187		–		–		c187		
20	"CCITT Rec. X.721 (1992) | ISO/IEC 10165-2:1992": octetsSentCounter	{2 9 3 2 7 80}	INTEGER	c185		c186		c187		–		–		c187		

Copyright International Organization for Standardization
Provided by IHS under license with ISO
No reproduction or networking permitted without license from IHS
Not for Resale

Table F.65 *(concluded)*

Index	Attribute template label	Value of object identifier for attribute	Constraints and values	Set by create		Get		Replace		Add		Remove		Set to default		Additional information
				Status	Support	Status	Support	Status	Support	Status	Support	Status	Support	Status	Support	
21	"CCITT Rec. X.721 (1992) | ISO/IEC 10165-2:1992": packages	{2 9 3 2 7 66}	SET OF OBJECT IDENTIFIER	c190		c191		c192		c192		c192		c192		
22	packetSizes	{2 13 0 2 7 121}	SEQUENCE	c183		m		c184		–		–		c184		
23	providerInitiatedDisconnects	{2 13 0 2 7 54}	INTEGER	c185		c186		c187		–		–		c187		
24	providerInitiatedResets	{2 13 0 2 7 59}	INTEGER	c185		c186		c187		–		–		c187		
25	rOASelection	{2 13 0 2 7 166}	BOOLEAN	c180		c181		c182		–		–		c182		
26	remoteDTEAddress	{2 13 0 2 7 93}	SEQUENCE	c183		m		c184		–		–		c184		
27	remotelyInitiatedResets	{2 13 0 2 7 57}	INTEGER	c185		c186		c187		–		–		c187		
28	remotelyInitiatedRestarts	{2 13 0 2 7 61}	INTEGER	c185		c186		c187		–		–		c187		
29	resetTimeouts	{2 13 0 2 7 60}	INTEGER	c185		c186		c187		–		–		c187		
30	reverseCharging	{2 13 0 2 7 75}	BOOLEAN	c180		c181		c182		–		–		c182		
31	throughputClasses	{2 13 0 2 7 96}	SEQUENCE	c183		m		c184		–		–		c184		
32	transitDelaySelectionAndIndication	{2 13 0 2 7 169}	BOOLEAN	c183		m		c184		–		–		c184		
33	virtualCircuitId	{2 13 0 2 7 116}	GraphicString	c188		m		x		–		–		x		
34	windowSizes	{2 13 0 2 7 124}	SEQUENCE	c183		m		c184		–		–		c184		
35	x25SegmentsReceived	{2 13 0 2 7 171}	INTEGER	c185		c186		c187		–		–		c187		
36	x25SegmentsSent	{2 13 0 2 7 170}	INTEGER	c185		c186		c187		–		–		c187		

c178: if F.64/3a then (if G.1/26a then o else x) else –
c179: if F.64/3a then m else –
c180: if F.64/7a and [F.62/1b or (G.1/25a)] then x else –
c181: if F.64/7a then m else –
c182: if F.64/7a and F.62/1b then x else –
c183: if F.62/1b or (G.1/25a) then x else –
c184: if F.62/1b then x else –
c185: if F.64/6a and [F.62/1b or (G.1/25a)] then x else –
c186: if F.64/6a then m else –
c187: if F.64/6a and F.62/1b then x else –
c188: if G.1/26a then o else x
c189: if G.1/26a then m else x
c190: if F.64/2a then (if G.1/26a then o else x) else –
c191: if F.64/2a then m else –
c192: if F.64/2a then x else –

--`,,```,,,,````-`-`,,`,,`,`,,`---

F.12.4 Attribute Groups

See Table F.66.

Table F.66 – virtualCall-DCE Attribute group support

				Get		Set to default		
Index	Attribute group template label	Value of object identifier for attribute group	Constraints and values	Status	Support	Status	Support	Additional information
1	"ITU-T Rec. X.723 (1993) | ISO/IEC 10165-5:1994" counters	{2 9 3 5 8 0}	dataPacketsReceived dataPacketsSent interruptPacketsReceived interruptPacketsSent interruptTimerExpiries "CCITT Rec. X.721 (1992) | ISO/IEC 10165-2:1992": octetsReceivedCounter "CCITT Rec. X.721 (1992) | ISO/IEC 10165-2:1992": octetsSentCounter providerInitiatedDisconnects providerInitiatedResets remotelyInitiatedResets remotelyInitiatedRestarts resetTimeouts x25SegmentsReceived x25SegmentsSent	c186		c187		

Copyright International Organization for Standardization
Provided by IHS under license with ISO
No reproduction or networking permitted without license from IHS
Not for Resale

Copyright International Organization for Standardization
Provided by IHS under license with ISO
No reproduction or networking permitted without license from IHS

F.12.5 Actions

See Table F.67.

Table F.67 – virtualCall-DCE Action support

Index	Action type template label	Value of object identifier for action type	Constraints and values	Status	Support	Additional information	Subindex	Action field name label	Constraints and values	Status	Support	Additional information
1	"ITU-T Rec. X.723 (1993) | ISO/IEC 10165-5:1994": deactivate	{2 9 3 5 9 1}		m			1.1	ActionInfo	**Information Syntax** SET OF SEQUENCE	m		
							1.1.1	identifier	OBJECT IDENTIFIER	m		
							1.1.2	significance	BOOLEAN	o		
							1.1.3	information	ANY DEFINED BY identifier	m		
							1.2	ActionReply	**Reply Syntax** SET OF SEQUENCE	m		
							1.2.1	identifier	OBJECT IDENTIFIER	m		
							1.2.2	significance	BOOLEAN	o		
							1.2.3	information	ANY DEFINED BY identifier	m		

Not for Resale

Copyright International Organization for Standardization
Provided by IHS under license with ISO
No reproduction or networking permitted without license from IHS
Not for Resale

F.12.6 Notifications

See Table F.68.

Table F.68 – virtualCall-DCE Notification support

					Support									
Index	Notification type template label	Value of object identifier for notification type	Constraints and values	Status	Con-firmed	Non-con-firmed	Additional information	Subindex	Notification field name label	Value of object identifier of attribute type associated with field	Constraints and values	Status	Support	Additional information
1	"ITU-T Rec. X.723 (1993) | ISO/IEC 10165-5:1994": communicationsIn-formation	{2 9 3 5 10 0}		m				1.1	CommunicationsInformation		**Information Syntax** SEQUENCE	m		
								1.1.1	informationType	{2 9 3 5 7 5}	OBJECT IDENTIFIER	m		
								1.1.2	informationData	{2 9 3 5 7 4}	SET OF SEQUENCE	o		
								1.1.2.1	identifier	–	OBJECT IDENTIFIER	c:m		
								1.1.2.2	significance	–	BOOLEAN	c:o		
								1.1.2.3	information	–	ANY DEFINED BY identifier	c:m		
2	"CCITT Rec. X.721 (1992) | ISO/IEC 10165-2:1992": objectCreation	{2 9 3 2 10 6}		m				2.1	ObjectInfo		**Information Syntax** SEQUENCE	m		
								2.1.1	sourceIndicator	{2 9 3 2 7 26}	ENUMERATED	o		
								2.1.2	attributeList	{2 9 3 2 7 9}	SET OF Attribute	o		
								2.1.3	notificationIdentifier	{2 9 3 2 7 16}	INTEGER	o		
								2.1.4	correlatedNotifications	{2 9 3 2 7 12}	SET OF SEQUENCE	o		
								2.1.4.1	correlatedNotifications	{2 9 3 2 7 12}	SET OF INTEGER	c:m		
								2.1.4.2	sourceObjectInst	–	ObjectInstance	c:o		

Copyright International Organization for Standardization
Provided by IHS under license with ISO
No reproduction or networking permitted without license from IHS
Not for Resale

Table F.68 *(concluded)*

					Support									
Index	Notification type template label	Value of object identifier for notification type	Constraints and values	Status	Con-firmed	Non-con-firmed	Additional information	Subindex	Notification field name label	Value of object identifier of attribute type associated with field	Constraints and values	Status	Support	Additional information
								2.1.5	additionalText	{2 9 3 2 7 7}	GraphicString	o		
								2.1.6	additionalInformation	{2 9 3 2 7 6}	SET OF SEQUENCE	o		
								2.1.6.1	identifier	–	OBJECT IDENTIFIER	c:m		
								2.1.6.2	significance	–	BOOLEAN	c:o		
								2.1.6.3	information	–	ANY DEFINED BY identifier	c:m		
3	"CCITT Rec. X.721 (1992) | ISO/IEC 10165-2:1992": objectDeletion	{2 9 3 2 10 7}		m				3.1	ObjectInfo		**Information Syntax** SEQUENCE	m		
								3.1.1	sourceIndicator	{2 9 3 2 7 26}	ENUMERATED	o		
								3.1.2	attributeList	{2 9 3 2 7 9}	SET OF Attribute	o		
								3.1.3	notificationIdentifier	{2 9 3 2 7 16}	INTEGER	o		
								3.1.4	correlatedNotifications	{2 9 3 2 7 12}	SET OF SEQUENCE	o		
								3.1.4.1	correlatedNotifications	{2 9 3 2 7 12}	SET OF INTEGER	c:m		
								3.1.4.2	sourceObjectInst	–	ObjectInstance	c:o		
								3.1.5	additionalText	{2 9 3 2 7 7}	GraphicString	o		
								3.1.6	additionalInformation	{2 9 3 2 7 6}	SET OF SEQUENCE	o		
								3.1.6.1	identifier	–	OBJECT IDENTIFIER	c:m		
								3.1.6.2	significance	–	BOOLEAN	c:o		
								3.1.6.3	information	–	ANY DEFINED BY identifier	c:m		

F.13 The virtual call-DTE managed object

F.13.1 Statement of conformance to the managed object class

See Table F.69.

Table F.69 – virtualCall-DTE Managed object class support

Index	Managed object class template label	Value of object identifier for class	Support of all mandatory features? (Y/N)	Is the actual class the same as the managed object class to which conformance is claimed? (Y/N)
1	virtualCall-DTE	{2 13 0 2 3 16}		

If the answer to the actual class question in Table F.69 is No, the supplier of the implementation shall fill in the actual class support Table F.70.

Table F.70 – virtualCall-DTE Actual class support

Index	Managed object class template for actual class	Value of object identifier for managed object class definition of actual class	Additional information

F.13.2 Packages

The supplier of the implementation shall state whether or not the packages specified by this managed object of this class are supported, in Table F.71.

Table F.71 – virtualCall-DTE Package support

Index	Package template label	Value of object identifier for package	Constraints and values	Status	Support	Additional information
1	"CCITT Rec. X.721 (1992) | ISO/IEC 10165-2:1992": topPackage		Mandatory	m		
2	"CCITT Rec. X.721 (1992) | ISO/IEC 10165-2:1992": packagesPackage	{2 9 3 2 4 16}	"any registered package, other than this package has been instantiated"	c193		
3	"CCITT Rec. X.721 (1992) | ISO/IEC 10165-2:1992": allomorphicPackage	{2 9 3 2 4 17}	"if an object supports allomorphism"	c194		
4	virtualCall-DTE-P		Mandatory	m		
5	virtualCircuit-P		Mandatory	m		
6	dTEVirtualCircuitCounters-P	{2 13 0 2 4 19}	"the instance supports the dTEVirtualCircuitCounters capabilities"	o		
c193: if F.71/3a or F.71/6a then m else – c194: if F.69/1b then – else m						

F.13.3 Attributes

The supplier of the implementation shall state whether or not the attributes specified by all of the packages instantiated in a managed object of this class are supported, in the Support and Additional information columns of Table F.72. The supplier of the implementation shall indicate support for each of the operations for each attribute supported.

Copyright International Organization for Standardization
Provided by IHS under license with ISO
No reproduction or networking permitted without license from IHS
Not for Resale

Copyright International Organization for Standardization
Provided by IHS under license with ISO
No reproduction or networking permitted without license from IHS
Not for Resale

Table F.72 – virtualCall-DTE Attribute support

				Set by create		Get		Replace		Add		Remove		Set to default		
Index	Attribute template label	Value of object identifier for attribute	Constraints and values	Status	Support	Status	Support	Status	Support	Status	Support	Status	Support	Status	Support	Additional information
1	"CCITT Rec. X.721 (1992) | ISO/IEC 10165-2:1992": allomorphs	{2 9 3 2 7 50}	SET OF ObjectClass	c195		c196		–		–		–		–		
2	calledAddressExtension	{2 13 0 2 7 100}	OCTET STRING	x		m		c197		–		–		c197		
3	callingAddressExtension	{2 13 0 2 7 99}	OCTET STRING	x		m		c197		–		–		c197		
4	dataPacketsReceived	{2 13 0 2 7 51}	INTEGER	c198		c199		c200		–		–		c200		
5	dataPacketsSent	{2 13 0 2 7 50}	INTEGER	c198		c199		c200		–		–		c200		
6	dataRetransmissionTimerExpiries	{2 13 0 2 7 58}	INTEGER	c198		c199		c200		–		–		c200		
7	direction	{2 13 0 2 7 92}	ENUMERATED	x		m		c197		–		–		c197		
8	fastSelect	{2 13 0 2 7 76}	ENUMERATED	x		m		c197		–		–		c197		
9	interruptPacketsReceived	{2 13 0 2 7 68}	INTEGER	c198		c199		c200		–		–		c200		
10	interruptPacketsSent	{2 13 0 2 7 67}	INTEGER	c198		c199		c200		–		–		c200		
11	interruptTimerExpiries	{2 13 0 2 7 69}	INTEGER	c198		c199		c200		–		–		c200		
12	logicalChannel	{2 13 0 2 7 89}	INTEGER	x		m		c197		–		–		c197		
13	"CCITT Rec. X.721 (1992) | ISO/IEC 10165-2:1992": nameBinding	{2 9 3 2 7 63}	OBJECT IDENTIFIER	x		m		x		–		–		x		
14	"CCITT Rec. X.721 (1992) | ISO/IEC 10165-2:1992": objectClass	{2 9 3 2 7 65}	ObjectClass	x		m		x		–		–		x		
15	"CCITT Rec. X.721 (1992) | ISO/IEC 10165-2:1992": octetsReceivedCounter	{2 9 3 2 7 78}	INTEGER	c198		c199		c200		–		–		c200		

--`,,```,,,,````-`-`,,`,,`,`,,`---

Copyright International Organization for Standardization
Provided by IHS under license with ISO
No reproduction or networking permitted without license from IHS
Not for Resale

Table F.72 *(concluded)*

Index	Attribute template label	Value of object identifier for attribute	Constraints and values	Set by create		Get		Replace		Add		Remove		Set to default		Additional information
				Status	Support	Status	Support	Status	Support	Status	Support	Status	Support	Status	Support	
16	"CCITT Rec. X.721 (1992) | ISO/IEC 10165-2:1992": octetsSentCounter	{2 9 3 2 7 80}	INTEGER	c198		c199		c200		–		–		c200		
17	originallyCalledAddress	{2 13 0 2 7 98}	SEQUENCE	x		m		c197		–		–		c197		
18	"CCITT Rec. X.721 (1992) | ISO/IEC 10165-2:1992": packages	{2 9 3 2 7 66}	SET OF OBJECT IDENTIFIER	c201		c202		c201		c201		c201		c201		
19	packetSizes	{2 13 0 2 7 121}	SEQUENCE	x		m		c197		–		–		c197		
20	providerInitiatedResets	{2 13 0 2 7 59}	INTEGER	c198		c199		c200		–		–		c200		
21	redirectReason	{2 13 0 2 7 97}	INTEGER	x		m		c197		–		–		c197		
22	remoteDTEAddress	{2 13 0 2 7 93}	SEQUENCE	x		m		c197		–		–		c197		
23	remotelyInitiatedResets	{2 13 0 2 7 57}	INTEGER	c198		c199		c200		–		–		c200		
24	resetTimeouts	{2 13 0 2 7 60}	INTEGER	c198		c199		c200		–		–		c200		
25	reverseCharging	{2 13 0 2 7 75}	BOOLEAN	x		m		c197		–		–		c197		
26	throughputClasses	{2 13 0 2 7 96}	SEQUENCE	x		m		c197		–		–		c197		
27	virtualCircuitId	{2 13 0 2 7 116}	GraphicString	x		m		x		–		–		x		
28	windowSizes	{2 13 0 2 7 124}	SEQUENCE	x		m		c197		–		–		c197		

c195: if F.71/3a then x else –
c196: if F.71/3a then m else –
c197: if F.69/1b then x else –
c198: if F.71/6a then x else –
c199: if F.71/6a then m else –
c200: if F.71/6a and F.69/1b then x else –
c201: if F.71/2a then x else –
c202: if F.71/2a then m else –

F.13.4 Attribute Groups

See Table F.73.

Table F.73 – virtualCall-DTE Attribute group support

				Get		Set to default		
Index	Attribute group template label	Value of object identifier for attribute group	Constraints and values	Status	Support	Status	Support	Additional information
1	"ITU-T Rec. X.723 (1993) | ISO/IEC 10165-5:1994" counters	{2 9 3 5 8 0}	dataPacketsReceived dataPacketsSent dataRetransmissionTimerExpiries interruptPacketsReceived interruptPacketsSent interruptTimerExpiries "CCITT Rec. X.721 (1992) | ISO/IEC 10165-2:1992": octetsReceivedCounter "CCITT Rec. X.721 (1992) | ISO/IEC 10165-2:1992": octetsSentCounter providerInitiatedResets remotelyInitiatedResets resetTimeouts	c199		–		

Copyright International Organization for Standardization
Provided by IHS under license with ISO
No reproduction or networking permitted without license from IHS
Not for Resale

Copyright International Organization for Standardization
Provided by IHS under license with ISO
No reproduction or networking permitted without license from IHS
Not for Resale

F.13.5 Actions

See Table F.74.

Table F.74 – virtualCall-DTE Action support

Index	Action type template label	Value of object identifier for action type	Constraints and values	Status	Support	Additional information	Subindex	Action field name label	Constraints and values	Status	Support	Additional information
1	"ITU-T Rec. X.723 (1993) | ISO/IEC 10165-5:1994": deactivate	{2 9 3 5 9 1}		m			1.1	ActionInfo	**Information Syntax** SET OF SEQUENCE	m		
							1.1.1	identifier	OBJECT IDENTIFIER	m		
							1.1.2	significance	BOOLEAN	o		
							1.1.3	information	ANY DEFINED BY identifier	m		
							1.2	ActionReply	**Reply Syntax** SET OF SEQUENCE	m		
							1.2.1	identifier	OBJECT IDENTIFIER	m		
							1.2.2	significance	BOOLEAN	o		
							1.2.3	information	ANY DEFINED BY identifier	m		

Copyright International Organization for Standardization
Provided by IHS under license with ISO
No reproduction or networking permitted without license from IHS
Not for Resale

F.13.6 Notifications

See Table F.75.

Table F.75 – virtualCall-DTE Notification support

Index	Notification type template label	Value of object identifier for notification type	Constraints and values	Status	Support: Con-firmed	Support: Non-con-firmed	Additional information	Subindex	Notification field name label	Value of object identifier of attribute type associated with field	Constraints and values	Status	Support	Additional information
1	"ITU-T Rec. X.723 (1993) | ISO/IEC 10165-5:1994": communicationsInformation	{2 9 3 5 10 0}		m				1.1	CommunicationsInformation		**Information Syntax** SEQUENCE	m		
								1.1.1	informationType	{2 9 3 5 7 5}	OBJECT IDENTIFIER	m		
								1.1.2	informationData	{2 9 3 5 7 4}	SET OF SEQUENCE	o		
								1.1.2.1	identifier	–	OBJECT IDENTIFIER	c:m		
								1.1.2.2	significance	–	BOOLEAN	c:o		
								1.1.2.3	information	–	ANY DEFINED BY identifier	c:m		
2	"CCITT Rec. X.721 (1992) | ISO/IEC 10165-2:1992": objectCreation	{2 9 3 2 10 6}		m				2.1	ObjectInfo		**Information Syntax** SEQUENCE	m		
								2.1.1	sourceIndicator	{2 9 3 2 7 26}	ENUMERATED	o		
								2.1.2	attributeList	{2 9 3 2 7 9}	SET OF Attribute	o		
								2.1.3	notificationIdentifier	{2 9 3 2 7 16}	INTEGER	o		
								2.1.4	correlatedNotifications	{2 9 3 2 7 12}	SET OF SEQUENCE	o		
								2.1.4.1	correlatedNotifications	{2 9 3 2 7 12}	SET OF INTEGER	c:m		
								2.1.4.2	sourceObjectInst	–	ObjectInstance	c:o		

Copyright International Organization for Standardization
Provided by IHS under license with ISO
No reproduction or networking permitted without license from IHS
Not for Resale

Table F.75 *(concluded)*

					Support										
Index	Notification type template label	Value of object identifier for notification type	Constraints and values	Status	Con-firmed	Non-con-firmed	Additional information	Subindex	Notification field name label	Value of object identifier of attribute type associated with field	Constraints and values	Status	Support	Additional information
								2.1.5	additionalText	{2 9 3 2 7 7}	GraphicString	o		
								2.1.6	additionalInformation	{2 9 3 2 7 6}	SET OF SEQUENCE	o		
								2.1.6.1	identifier	–	OBJECT IDENTIFIER	c:m		
								2.1.6.2	significance	–	BOOLEAN	c:o		
								2.1.6.3	information	–	ANY DEFINED BY identifier	c:m		
3	"CCITT Rec. X.721 (1992) | ISO/IEC 10165-2:1992": objectDeletion	{2 9 3 2 10 7}		m				3.1	ObjectInfo		**Information Syntax** SEQUENCE	m		
								3.1.1	sourceIndicator	{2 9 3 2 7 26}	ENUMERATED	o		
								3.1.2	attributeList	{2 9 3 2 7 9}	SET OF Attribute	o		
								3.1.3	notificationIdentifier	{2 9 3 2 7 16}	INTEGER	o		
								3.1.4	correlatedNotifications	{2 9 3 2 7 12}	SET OF SEQUENCE	o		
								3.1.4.1	correlatedNotifications	{2 9 3 2 7 12}	SET OF INTEGER	c:m		
								3.1.4.2	sourceObjectInst	–	ObjectInstance	c:o		
								3.1.5	additionalText	{2 9 3 2 7 7}	GraphicString	o		
								3.1.6	additionalInformation	{2 9 3 2 7 6}	SET OF SEQUENCE	o		
								3.1.6.1	identifier	–	OBJECT IDENTIFIER	c:m		
								3.1.6.2	significance	–	BOOLEAN	c:o		
								3.1.6.3	information	–	ANY DEFINED BY identifier	c:m		

F.14 The virtual call initial values managed object

F.14.1 Statement of conformance to the managed object class

See Table F.76.

Table F.76 – virtualCallIVMO Managed object class support

Index	Managed object class template label	Value of object identifier for class	Support of all mandatory features? (Y/N)	Is the actual class the same as the managed object class to which conformance is claimed? (Y/N)
1	virtualCallIVMO	{2 13 0 2 3 15}		

If the answer to the actual class question in Table F.76 is No, the supplier of the implementation shall fill in the actual class support Table F.77.

Table F.77 – virtualCallIVMO Actual class support

Index	Managed object class template for actual class	Value of object identifier for managed object class definition of actual class	Additional information

F.14.2 Packages

The supplier of the implementation shall state whether or not the packages specified by this managed object of this class are supported, in Table F.78.

Table F.78 – virtualCallIVMO Package support

Index	Package template label	Value of object identifier for package	Constraints and values	Status	Support	Additional information
1	"CCITT Rec. X.721 (1992) | ISO/IEC 10165-2:1992": topPackage		Mandatory	m		
2	"CCITT Rec. X.721 (1992) | ISO/IEC 10165-2:1992": packagesPackage	{2 9 3 2 4 16}	"any registered package, other than this package has been instantiated"	c203		
3	"CCITT Rec. X.721 (1992) | ISO/IEC 10165-2:1992": allomorphicPackage	{2 9 3 2 4 17}	"if an object supports allomorphism"	c204		
4	virtualCallIVMO–P		Mandatory	m		
c203: if F.78/3a then m else – c204: if F.76/1b then – else m						

F.14.3 Attributes

The supplier of the implementation shall state whether or not the attributes specified by all of the packages instantiated in a managed object of this class are supported, in the Support and Additional information columns of Table F.79. The supplier of the implementation shall indicate support for each of the operations for each attribute supported.

Copyright International Organization for Standardization
Provided by IHS under license with ISO
No reproduction or networking permitted without license from IHS
Not for Resale

Copyright International Organization for Standardization
Provided by IHS under license with ISO
No reproduction or networking permitted without license from IHS
Not for Resale

Table F.79 – virtualCallIVMO Attribute support

				Set by create		Get		Replace		Add		Remove		Set to default		
Index	Attribute template label	Value of object identifier for attribute	Constraints and values	Status	Support	Status	Support	Status	Support	Status	Support	Status	Support	Status	Support	Additional information
1	"CCITT Rec. X.721 (1992) | ISO/IEC 10165-2:1992": allomorphs	{2 9 3 2 7 50}	SET OF ObjectClass	c205		c206		–		–		–		–		
2	fastSelect	{2 13 0 2 7 76}	ENUMERATED	m		m		m		–		–		c207		
3	"CCITT Rec. X.721 (1992) | ISO/IEC 10165-2:1992": nameBinding	{2 9 3 2 7 63}	OBJECT IDENTIFIER	o		m		x		–		–		x		
4	"CCITT Rec. X.721 (1992) | ISO/IEC 10165-2:1992": objectClass	{2 9 3 2 7 65}	ObjectClass	m		m		x		–		–		x		
5	"CCITT Rec. X.721 (1992) | ISO/IEC 10165-2:1992": packages	{2 9 3 2 7 66}	SET OF OBJECT IDENTIFIER	c208		c209		c210		c210		c210		c210		
6	packetSizes	{2 13 0 2 7 121}	SEQUENCE	m		m		m		–		–		c207		
7	reverseCharging	{2 13 0 2 7 75}	BOOLEAN	m		m		m		–		–		c207		
8	throughputClasses	{2 13 0 2 7 96}	SEQUENCE	m		m		m		–		–		c207		
9	virtualCallIVMOId	{2 13 0 2 7 117}	GraphicString	o		m		x		–		–		x		
10	windowSizes	{2 13 0 2 7 124}	SEQUENCE	m		m		m		–		–		c207		

c205: if F.78/3a then o else –
c206: if F.78/3a then m else –
c207: if F.76/1b then x else –
c208: if F.78/2a then o else –
c209: if F.78/2a then m else –
c210: if F.78/2a then x else –

Copyright International Organization for Standardization
Provided by IHS under license with ISO
No reproduction or networking permitted without license from IHS
Not for Resale

F.14.4 Notifications

See Table F.80.

Table F.80 – virtualCallIVMO Notification support

					Support									
Index	Notification type template label	Value of object identifier for notification type	Constraints and values	Status	Con-firmed	Non-con-firmed	Additional information	Subindex	Notification field name label	Value of object identifier of attribute type associated with field	Constraints and values	Status	Support	Additional information
1	"CCITT Rec. X.721 (1992) | ISO/IEC 10165-2:1992": objectCreation	{2 9 3 2 10 6}		m				1.1	ObjectInfo		**Information Syntax** SEQUENCE	m		
								1.1.1	sourceIndicator	{2 9 3 2 7 26}	ENUMERATED	o		
								1.1.2	attributeList	{2 9 3 2 7 9}	SET OF Attribute	o		
								1.1.3	notificationIdentifier	{2 9 3 2 7 16}	INTEGER	o		
								1.1.4	correlatedNotifications	{2 9 3 2 7 12}	SET OF SEQUENCE	o		
								1.1.4.1	correlatedNotifications	{2 9 3 2 7 12}	SET OF INTEGER	c:m		
								1.1.4.2	sourceObjectInst	–	ObjectInstance	c:o		
								1.1.5	additionalText	{2 9 3 2 7 7}	GraphicString	o		
								1.1.6	additionalInformation	{2 9 3 2 7 6}	SET OF SEQUENCE	o		
								1.1.6.1	identifier	–	OBJECT IDENTIFIER	c:m		
								1.1.6.2	significance	–	BOOLEAN	c:o		
								1.1.6.3	information	–	ANY DEFINED BY identifier	c:m		

--`,,```,,,,````-`-`,,`,,`,`,,`---

Copyright International Organization for Standardization
Provided by IHS under license with ISO
No reproduction or networking permitted without license from IHS
Not for Resale

Table F.80 *(concluded)*

					Support									
Index	Notification type template label	Value of object identifier for notification type	Constraints and values	Status	Con-firmed	Non-con-firmed	Additional information	Subindex	Notification field name label	Value of object identifier of attribute type associated with field	Constraints and values	Status	Support	Additional information
2	"CCITT Rec. X.721 (1992) | ISO/IEC 10165-2:1992": objectDeletion	{2 9 3 2 10 7}		m				2.1	ObjectInfo		**Information Syntax** SEQUENCE	m		
								2.1.1	sourceIndicator	{2 9 3 2 7 26}	ENUMERATED	o		
								2.1.2	attributeList	{2 9 3 2 7 9}	SET OF Attribute	o		
								2.1.3	notificationIdentifier	{2 9 3 2 7 16}	INTEGER	o		
								2.1.4	correlatedNotifications	{2 9 3 2 7 12}	SET OF SEQUENCE	o		
								2.1.4.1	correlatedNotifications	{2 9 3 2 7 12}	SET OF INTEGER	c:m		
								2.1.4.2	sourceObjectInst	–	ObjectInstance	c:o		
								2.1.5	additionalText	{2 9 3 2 7 7}	GraphicString	o		
								2.1.6	additionalInformation	{2 9 3 2 7 6}	SET OF SEQUENCE	o		
								2.1.6.1	identifier	–	OBJECT IDENTIFIER	c:m		
								2.1.6.2	significance	–	BOOLEAN	c:o		
								2.1.6.3	information	–	ANY DEFINED BY identifier	c:m		

F.15 The X25 PLE DCE managed object

F.15.1 Statement of conformance to the managed object class

See Table F.81.

Table F.81 – x25PLE-DCE Managed object class support

Index	Managed object class template label	Value of object identifier for class	Support of all mandatory features? (Y/N)	Is the actual class the same as the managed object class to which conformance is claimed? (Y/N)
1	x25PLE-DCE	{2 13 0 2 3 27}		

If the answer to the actual class question in Table F.81 is No, the supplier of the implementation shall fill in the actual class support Table F.82.

Table F.82 – x25PLE-DCE Actual class support

Index	Managed object class template for actual class	Value of object identifier for managed object class definition of actual class	Additional information

F.15.2 Packages

The supplier of the implementation shall state whether or not the packages specified by this managed object of this class are supported, in Table F.83.

Table F.83 – x25PLE-DCE Package support

Index	Package template label	Value of object identifier for package	Constraints and values	Status	Support	Additional information
1	"CCITT Rec. X.721 (1992) | ISO/IEC 10165-2:1992": topPackage		Mandatory	m		
2	"CCITT Rec. X.721 (1992) | ISO/IEC 10165-2:1992": packagesPackage	{2 9 3 2 4 16}	"any registered package, other than this package has been instantiated"	c211		
3	"CCITT Rec. X.721 (1992) | ISO/IEC 10165-2:1992": allomorphicPackage	{2 9 3 2 4 17}	"if an object supports allomorphism"	c212		
4	x25PLE-DCE-P		Mandatory	m		
5	x25PLE-P		Mandatory	m		
6	dCECommonVirtualCircuitCounters-P	{2 13 0 2 4 23}	"the instance supports the dCECommon VirtualCircuitCounters capabilities"	o		
7	dCEX25PLEFacilities-P	{2 13 0 2 4 26}	"the instance supports the dCEX25PLEFacilities capabilities"	o		
8	dCEX25PLETimers-P	{2 13 0 2 4 25}	"the instance supports the dCEX25PLETimers capabilities"	o		
c211: if F.83/3a or F.83/6a or F.83/7a or F.83/8a then m else – c212: if F.81/1b then – else m						

F.15.3 Attributes

The supplier of the implementation shall state whether or not the attributes specified by all of the packages instantiated in a managed object of this class are supported, in the Support and Additional information columns of Table F.84. The supplier of the implementation shall indicate support for each of the operations for each attribute supported.

Copyright International Organization for Standardization
Provided by IHS under license with ISO
No reproduction or networking permitted without license from IHS
Not for Resale

Copyright International Organization for Standardization
Provided by IHS under license with ISO
No reproduction or networking permitted without license from IHS
Not for Resale

Table F.84 – x25PLE-DCE Attribute support

				Set by create		Get		Replace		Add		Remove		Set to default		
Index	Attribute template label	Value of object identifier for attribute	Constraints and values	Status	Support	Status	Support	Status	Support	Status	Support	Status	Support	Status	Support	Additional information
1	"CCITT Rec. X.721 (1992) | ISO/IEC 10165-2:1992": administrativeState	{2 9 3 2 7 31}	ENUMERATED	c213		m		m		–		–		c214		
2	"CCITT Rec. X.721 (1992) | ISO/IEC 10165-2:1992": allomorphs	{2 9 3 2 7 50}	SET OF ObjectClass	c215		c216		–		–		–		–		
3	bilateralCUG	{2 13 0 2 7 125}	BOOLEAN	c217		c218		c218		–		–		c218		
4	bilateralCUGWithOutgoingAccess	{2 13 0 2 7 127}	BOOLEAN	c217		c218		c218		–		–		c218		
5	cUG	{2 13 0 2 7 134}	BOOLEAN	c213		m		m		–		–		m		
6	cUGWithIncomingAccess	{2 13 0 2 7 136}	BOOLEAN	c217		c218		c218		–		–		c218		
7	cUGWithOutgoingAccess	{2 13 0 2 7 137}	BOOLEAN	c217		c218		c218		–		–		c218		
8	callAttempts	{2 13 0 2 7 52}	INTEGER	c219		m		c214		–		–		c214		
9	callDeflectionSubscription	{2 13 0 2 7 114}	BOOLEAN	c217		c218		c218		–		–		c218		
10	callRedirection	{2 13 0 2 7 129}	BOOLEAN	c217		c218		c218		–		–		c218		
11	callsConnected	{2 13 0 2 7 53}	INTEGER	c219		m		c214		–		–		c214		
12	chargingInformation	{2 13 0 2 7 132}	BOOLEAN	c217		c218		c218		–		–		c218		
13	clearIndication	{2 13 0 2 7 133}	INTEGER	c220		c221		c221		–		–		c222		
14	dBitModification	{2 13 0 2 7 139}	BOOLEAN	c217		c218		c218		–		–		c218		
15	dataPacketsReceived	{2 13 0 2 7 51}	INTEGER	c223		c224		c225		–		–		c225		
16	dataPacketsSent	{2 13 0 2 7 50}	INTEGER	c223		c224		c225		–		–		c225		
17	defaultPacketSizes	{2 13 0 2 7 103}	SEQUENCE	c213		m		m		–		–		m		
18	defaultThroughputClasses	{2 13 0 2 7 112}	SEQUENCE	c213		m		m		–		–		m		
19	defaultThroughputClassesAssignment	{2 13 0 2 7 144}	SEQUENCE	c217		c218		c218		–		–		c218		
20	defaultWindowSizes	{2 13 0 2 7 104}	SEQUENCE	c213		m		m		–		–		m		
21	extendedPacketSequenceNumbering	{2 13 0 2 7 49}	INTEGER	c217		c218		c218		–		–		c218		
22	fastSelectAcceptance	{2 13 0 2 7 145}	BOOLEAN	c213		m		m		–		–		m		
23	flowControlParameterNegotiation	{2 13 0 2 7 119}	BOOLEAN	c213		m		m		–		–		m		
24	huntGroup	{2 13 0 2 7 146}	BOOLEAN	c217		c218		c218		–		–		c218		
25	incomingCall	{2 13 0 2 7 147}	INTEGER	c220		c221		c221		–		–		c222		
26	incomingCallBarredWithinCUG	{2 13 0 2 7 149}	BOOLEAN	c217		c218		c218		–		–		c218		
27	incomingCallsBarred	{2 13 0 2 7 148}	BOOLEAN	c213		m		m		–		–		m		

Copyright International Organization for Standardization
Provided by IHS under license with ISO
No reproduction or networking permitted without license from IHS
Not for Resale

Table F.84 *(continued)*

				Set by create		Get		Replace		Add		Remove		Set to default		
Index	Attribute template label	Value of object identifier for attribute	Constraints and values	Status	Support	Status	Support	Status	Support	Status	Support	Status	Support	Status	Support	Additional information
28	interruptPacketsReceived	{2 13 0 2 7 68}	INTEGER	c223		c224		c225		–		–		c225		
29	interruptPacketsSent	{2 13 0 2 7 67}	INTEGER	c223		c224		c225		–		–		c225		
30	interruptTimerExpiries	{2 13 0 2 7 69}	INTEGER	c223		c224		c225		–		–		c225		
31	localChargingPrevention	{2 13 0 2 7 150}	BOOLEAN	c217		c218		c218		–		–		c218		
32	localDTEAddress	{2 13 0 2 7 39}	SEQUENCE	c213		m		m		–		–		c214		
33	logicalChannelAssignments	{2 13 0 2 7 48}	SEQUENCE	c213		m		m		–		–		c214		
34	nUIOverride	{2 13 0 2 7 154}	BOOLEAN	c217		c218		c218		–		–		c218		
35	nUISubscription	{2 13 0 2 7 153}	BOOLEAN	c217		c218		c218		–		–		c218		
36	“CCITT Rec. X.721 (1992) | ISO/IEC 10165-2:1992”: nameBinding	{2 9 3 2 7 63}	OBJECT IDENTIFIER	c226		m		x		–		–		x		
37	nonStandardDefaultPacketSizes	{2 13 0 2 7 151}	SEQUENCE	c217		c218		c218		–		–		c218		
38	nonStandardDefaultWindowSizes	{2 13 0 2 7 152}	SEQUENCE	c217		c218		c218		–		–		c218		
39	“CCITT Rec. X.721 (1992) | ISO/IEC 10165-2:1992”: objectClass	{2 9 3 2 7 65}	ObjectClass	c213		m		x		–		–		x		
40	“CCITT Rec. X.721 (1992) | ISO/IEC 10165-2:1992”: octetsReceivedCounter	{2 9 3 2 7 78}	INTEGER	c223		c224		c225		–		–		c225		
41	“CCITT Rec. X.721 (1992) | ISO/IEC 10165-2:1992”: octetsSentCounter	{2 9 3 2 7 80}	INTEGER	c223		c224		c225		–		–		c225		
42	oneWayLogicalChannelIncoming	{2 13 0 2 7 156}	BOOLEAN	c217		c218		c218		–		–		c218		
43	oneWayLogicalChannelOutgoing	{2 13 0 2 7 157}	BOOLEAN	c213		m		m		–		–		m		
44	onlineFacilityRegistration	{2 13 0 2 7 158}	BOOLEAN	c217		c218		c218		–		–		c218		
45	“CCITT Rec. X.721 (1992) | ISO/IEC 10165-2:1992”: operationalState	{2 9 3 2 7 35}	ENUMERATED	x		m		x		–		–		x		
46	outgoingCallBarredWithinCUG	{2 13 0 2 7 160}	BOOLEAN	c217		c218		c218		–		–		c218		
47	outgoingCallsBarred	{2 13 0 2 7 159}	BOOLEAN	c213		m		m		–		–		m		
48	“CCITT Rec. X.721 (1992) | ISO/IEC 10165-2:1992”: packages	{2 9 3 2 7 66}	SET OF OBJECT IDENTIFIER	c227		c228		c229		c229		c229		c229		
49	packetRetransmission	{2 13 0 2 7 161}	BOOLEAN	c217		c218		c218		–		–		c218		

Copyright International Organization for Standardization
Provided by IHS under license with ISO
No reproduction or networking permitted without license from IHS
Not for Resale

Table F.84 *(concluded)*

				Set by create		Get		Replace		Add		Remove		Set to default		
Index	Attribute template label	Value of object identifier for attribute	Constraints and values	Status	Support	Status	Support	Status	Support	Status	Support	Status	Support	Status	Support	Additional information
50	protocolVersionSupported	{2 13 0 2 7 38}	ENUMERATED	c219		m		c214		–		–		c214		
51	providerInitiatedDisconnects	{2 13 0 2 7 54}	INTEGER	c223		c224		c225		–		–		c225		
52	providerInitiatedResets	{2 13 0 2 7 59}	INTEGER	c223		c224		c225		–		–		c225		
53	rOASubscription	{2 13 0 2 7 167}	BOOLEAN	c217		c218		c218		–		–		c218		
54	remotelyInitiatedResets	{2 13 0 2 7 57}	INTEGER	c223		c224		c225		–		–		c225		
55	remotelyInitiatedRestarts	{2 13 0 2 7 61}	INTEGER	c223		c224		c225		–		–		c225		
56	resetIndication	{2 13 0 2 7 163}	INTEGER	c220		c221		c221		–		–		c222		
57	resetTimeouts	{2 13 0 2 7 60}	INTEGER	c223		c224		c225		–		–		c225		
58	restartIndication	{2 13 0 2 7 164}	INTEGER	c220		c221		c221		–		–		c222		
59	reverseChargingAcceptance	{2 13 0 2 7 165}	BOOLEAN	c217		c218		c218		–		–		c218		
60	sN-SAP	{2 13 0 2 7 18}	ObjectInstance	c219		m		c214		–		–		c214		
61	sN-ServiceProvider	{2 13 0 2 7 19}	ObjectInstance	c213		m		m		–		–		m		
62	throughputClassNegotiation	{2 13 0 2 7 168}	BOOLEAN	c213		m		m		–		–		m		
63	x25PLEId	{2 13 0 2 7 36}	GraphicString	c226		m		x		–		–		x		
64	x25PLEMode	{2 13 0 2 7 120}	ENUMERATED	c213		m		m		–		–		c214		
65	x25SegmentsReceived	{2 13 0 2 7 171}	INTEGER	c223		c224		c225		–		–		c225		
66	x25SegmentsSent	{2 13 0 2 7 170}	INTEGER	c223		c224		c225		–		–		c225		

c213: if G.1/30a then m else x
c214: if F.81/1b then x else –
c215: if F.83/3a then (if G.1/30a then o else x) else –
c216: if F.83/3a then m else –
c217: if F.83/7a then (if G.1/30a then m else x) else –
c218: if F.83/7a then m else –
c219: if F.81/1b or G.1/29a x then x else –
c220: if F.83/8a then (if G.1/30a then m else x) else –
c221: if F.83/8a then m else –
c222: if F.83/8a and F.81/1b then x else –
c223: if F.83/6a and (F.81/1b or G.1/29a) then x else –
c224: if F.83/6a then m else –
c225: if F.83/6a and F.81/1b then x else –
c226: if G.1/30a then o else x
c227: if F.83/2a then (if G.1/30a then o else x) else –
c228: if F.83/2a then m else –
c229: if F.83/2a then x else –

F.15.4 Attribute Groups

See Table F.85.

Table F.85 – x25PLE-DCE Attribute group support

				Get		Set to default		
Index	Attribute group template label	Value of object identifier for attribute group	Constraints and values	Status	Support	Status	Support	Additional information
1	"ITU-T Rec. X.723 (1993) | ISO/IEC 10165-5:1994" counters	{2 9 3 5 8 0}	callAttempts callsConnected	m		–		
2	"ITU-T Rec. X.723 (1993) | ISO/IEC 10165-5:1994" counters	{2 9 3 5 8 0}	dataPacketsReceived dataPacketsSent interruptPacketsReceived interruptPacketsSent interruptTimerExpiries "CCITT Rec. X.721 (1992) | ISO/IEC 10165-2:1992": octetsReceivedCounter "CCITT Rec. X.721 (1992) | ISO/IEC 10165-2:1992": octetsSentCounter providerInitiatedDisconnects providerInitiatedResets remotelyInitiatedResets remotelyInitiatedRestarts resetTimeouts x25SegmentsReceived x25SegmentsSent	c224		–		
3	"CCITT Rec. X.721 (1992) | ISO/IEC 10165-2:1992": state	{2 9 3 2 8 1}	"CCITT Rec. X.721 (1992) | ISO/IEC 10165-2:1992": administrativeState "CCITT Rec. X.721 (1992) | ISO/IEC 10165-2:1992": operationalState	m		–		

Copyright International Organization for Standardization
Provided by IHS under license with ISO
No reproduction or networking permitted without license from IHS
Not for Resale

Copyright International Organization for Standardization
Provided by IHS under license with ISO
No reproduction or networking permitted without license from IHS
Not for Resale

F.15.5 Actions

See Table F.86.

Table F.86 – x25PLE-DCE Action support

Index	Action type template label	Value of object identifier for action type	Constraints and values	Status	Support	Additional information	Subindex	Action field name label	Constraints and values	Status	Support	Additional information
1	"ITU-T Rec. X.723 (1993) | ISO/IEC 10165-5:1994": activate	{2 9 3 5 9 0}		m			1.1	ActionInfo	**Information Syntax** SET OF SEQUENCE	m		
							1.1.1	identifier	OBJECT IDENTIFIER	m		
							1.1.2	significance	BOOLEAN	o		
							1.1.3	information	ANY DEFINED BY identifier	m		
							1.2	ActionReply	**Reply Syntax** SET OF SEQUENCE	m		
							1.2.1	identifier	OBJECT IDENTIFIER	m		
							1.2.2	significance	BOOLEAN	o		
							1.2.3	information	ANY DEFINED BY identifier	m		
2	"ITU-T Rec. X.723 (1993) | ISO/IEC 10165-5:1994": deactivate	{2 9 3 5 9 1}		m			3.1	ActionInfo	**Information Syntax** SET OF SEQUENCE	m		
							3.1.1	identifier	OBJECT IDENTIFIER	m		
							3.1.2	significance	BOOLEAN	o		
							3.1.3	information	ANY DEFINED BY identifier	m		
							3.2	ActionReply	**Reply Syntax** SET OF SEQUENCE	m		
							3.2.1	identifier	OBJECT IDENTIFIER	m		
							3.2.2	significance	BOOLEAN	o		
							3.2.3	information	ANY DEFINED BY identifier	m		

Copyright International Organization for Standardization
Provided by IHS under license with ISO
No reproduction or networking permitted without license from IHS
Not for Resale

F.15.6 Notifications

See Table F.87.

Table F.87 – x25PLE-DCE Notification support

					Support									
Index	Notification type templace label	Value of object identifier for notification type	Constraints and values	Status	Con-firmed	Non-con-firmed	Additional information	Subindex	Notification field name label	Value of object identifier of attribute type associated with field	Constraints and values	Status	Support	Additional information
1	"CCITT Rec. X.721 (1992) | ISO/IEC 10165-2:1992": objectCreation	{2 9 3 2 10 6}		m				1.1	ObjectInfo		**Information Syntax** SEQUENCE	m		
								1.1.1	sourceIndicator	{2 9 3 2 7 26}	ENUMERATED	o		
								1.1.2	attributeList	{2 9 3 2 7 9}	SET OF Attribute	o		
								1.1.3	notificationIdentifier	{2 9 3 2 7 16}	INTEGER	o		
								1.1.4	correlatedNotifications	{2 9 3 2 7 12}	SET OF SEQUENCE	o		
								1.1.4.1	correlatedNotifications	{2 9 3 2 7 12}	SET OF INTEGER	c:m		
								1.1.4.2	sourceObjectInst	–	ObjectInstance	c:o		
								1.1.5	additionalText	{2 9 3 2 7 7}	GraphicString	o		
								1.1.6	additionalInformation	{2 9 3 2 7 6}	SET OF SEQUENCE	o		
								1.1.6.1	identifier	–	OBJECT IDENTIFIER	c:m		
								1.1.6.2	significance	–	BOOLEAN	c:o		
								1.1.6.3	information	–	ANY DEFINED BY identifier	c:m		

--`,,```,,,,````-`-`,,`,,`,`,,`---

Copyright International Organization for Standardization
Provided by IHS under license with ISO
No reproduction or networking permitted without license from IHS
Not for Resale

Table F.87 *(continued)*

					Support									
Index	Notification type templace label	Value of object identifier for notification type	Constraints and values	Status	Con-firmed	Non-con-firmed	Additional information	Subindex	Notification field name label	Value of object identifier of attribute type associated with field	Constraints and values	Status	Support	Additional information
2	"CCITT Rec. X.721 (1992) | ISO/IEC 10165-2:1992": objectDeletion	{2 9 3 2 10 7}		m				2.1	ObjectInfo		**Information Syntax** SEQUENCE	m		
								2.1.1	sourceIndicator	{2 9 3 2 7 26}	ENUMERATED	o		
								2.1.2	attributeList	{2 9 3 2 7 9}	SET OF Attribute	o		
								2.1.3	notificationIdentifier	{2 9 3 2 7 16}	INTEGER	o		
								2.1.4	correlatedNotifications	{2 9 3 2 7 12}	SET OF SEQUENCE	o		
								2.1.4.1	correlatedNotifications	{2 9 3 2 7 12}	SET OF INTEGER	c:m		
								2.1.4.2	sourceObjectInst	–	ObjectInstance	c:o		
								2.1.5	additionalText	{2 9 3 2 7 7}	GraphicString	o		
								2.1.6	additionalInformation	{2 9 3 2 7 6}	SET OF SEQUENCE	o		
								2.1.6.1	identifier	–	OBJECT IDENTIFIER	c:m		
								2.1.6.2	significance	–	BOOLEAN	c:o		
								2.1.6.3	information	–	ANY DEFINED BY identifier	c:m		

Copyright International Organization for Standardization
Provided by IHS under license with ISO
No reproduction or networking permitted without license from IHS
Not for Resale

Table F.87 *(concluded)*

					Support									
Index	Notification type templace label	Value of object identifier for notification type	Constraints and values	Status	Con-firmed	Non-con-firmed	Additional information	Subindex	Notification field name label	Value of object identifier of attribute type associated with field	Constraints and values	Status	Support	Additional information
3	"CCITT Rec. X.721 (1992) | ISO/IEC 10165-2:1992": stateChange	{2 9 3 2 10 14}		m				3.1	StateChangeInfo		**Information Syntax** SEQUENCE	m		
								3.1.1	sourceIndicator	{2 9 3 2 7 26}	ENUMERATED	o		
								3.1.2	attributeIdentifierList	{2 9 3 2 7 8}	SET OF AttributeId	o		
								3.1.3	stateChangeDefinition	{2 9 3 2 7 28}	SET OF SEQUENCE	m		
								3.1.3.1	attributeID	–	AttributeId	m		
								3.1.3.2	oldAttributeValue	–	ANY DEFINED BY attributeID	o		
								3.1.3.3	newAttributeValue	–	ANY DEFINED BY attributeID	m		
								3.1.4	notificationIdentifier	{2 9 3 2 7 16}	INTEGER	o		
								3.1.5	correlatedNotifications	{2 9 3 2 7 12}	SET OF SEQUENCE	o		
								3.1.5.1	correlatedNotifications	{2 9 3 2 7 12}	SET OF INTEGER	c:m		
								3.1.5.2	sourceObjectInst	–	ObjectInstance	c:o		
								3.1.6	additionalText	{2 9 3 2 7 7}	GraphicString	o		
								3.1.7	additionalInformation	{2 9 3 2 7 6}	SET OF SEQUENCE	o		
								3.1.7.1	identifier	–	OBJECT IDENTIFIER	c:m		
								3.1.7.2	significance	–	BOOLEAN	c:o		
								3.1.7.3	information	–	ANY DEFINED BY identifier	c:m		

F.16 The X25 PLE DTE managed object

F.16.1 Statement of conformance to the managed object class

See Table F.88.

Table F.88 – x25PLE-DTE Managed object class support

Index	Managed object class template label	Value of object identifier for class	Support of all mandatory features? (Y/N)	Is the actual class the same as the managed object class to which conformance is claimed? (Y/N)
1	x25PLE-DTE	{2 13 0 2 3 17}		

If the answer to the actual class question in Table F.88 is No, the supplier of the implementation shall fill in the actual class support Table F.89.

Table F.89 – x25PLE-DTE Actual class support

Index	Managed object class template for actual class	Value of object identifier for managed object class definition of actual class	Additional information

F.16.2 Packages

The supplier of the implementation shall state whether or not the packages specified by this managed object of this class are supported, in Table F.90.

Table F.90 – x25PLE-DTE Package support

Index	Package template label	Value of object identifier for package	Constraints and values	Status	Support	Additional information
1	"CCITT Rec. X.721 (1992) | ISO/IEC 10165-2:1992": topPackage		Mandatory	m		
2	"CCITT Rec. X.721 (1992) | ISO/IEC 10165-2:1992": packagesPackage	{2 9 3 2 4 16}	"any registered package, other than this package has been instantiated"	c230		
3	"CCITT Rec. X.721 (1992) | ISO/IEC 10165-2:1992": allomorphicPackage	{2 9 3 2 4 17}	"if an object supports allomorphism"	c231		
4	x25PLE-DTE-P		Mandatory	m		
5	x25PLE-P		Mandatory	m		
6	dTEX25PLECo unters-P	{2 13 0 2 4 18}	"the instance supports the dTEX25PLECo unters-P capabilities"	o		
7	receivingWindowRo tationRecoveryPro cedures-P	{2 13 0 2 4 12}	"The optional window rotation recovery procedures are implemented at a receiving DTE"	o		
8	transmittingWind owRotationRecover yProcedures-P	{2 13 0 2 4 13}	"The optional window rotation recovery procedures are implemented at a transmitting DTE"	o		
9	packetRetransmis sionProcedures-P	{2 13 0 2 4 14}	"The optional packet retransmission procedures are implemented"	o		
10	onlineRegistration-P	{2 13 0 2 4 11}	"The optional online registration facility is implemented"	o		
c230: if F.90/3a or F.90/6a or F.90/7a or F.90/8a or F.90/9a or F.90/10a then m else – c231: if F.88/1b then – else m						

F.16.3 Attributes

The supplier of the implementation shall state whether or not the attributes specified by all of the packages instantiated in a managed object of this class are supported, in the Support and Additional information columns of Table F.91. The supplier of the implementation shall indicate support for each of the operations for each attribute supported.

--`,,```,,,,````-`-`,,`,,`,`,,`---

Copyright International Organization for Standardization
Provided by IHS under license with ISO
No reproduction or networking permitted without license from IHS
Not for Resale

Copyright International Organization for Standardization
Provided by IHS under license with ISO
No reproduction or networking permitted without license from IHS
Not for Resale

Table F.91 – x25PLE-DTE Attribute support

				Set by create		Get		Replace		Add		Remove		Set to default		
Index	Attribute template label	Value of object identifier for attribute	Constraints and values	Status	Support	Status	Support	Status	Support	Status	Support	Status	Support	Status	Support	Additional information
1	"CCITT Rec. X.721 (1992) | ISO/IEC 10165-2:1992": administrativeState	{2 9 3 2 7 31}	ENUMERATED	c232		m		m		–		–		c233		
2	"CCITT Rec. X.721 (1992) | ISO/IEC 10165-2:1992": allomorphs	{2 9 3 2 7 50}	SET OF ObjectClass	c234		c235		–		–		–		–		
3	callAttempts	{2 13 0 2 7 52}	INTEGER	c236		m		c233		–		–		c233		
4	callDeflectionSubscription	{2 13 0 2 7 114}	BOOLEAN	c232		m		m		–		–		m		
5	callEstablishmentRetryCountsExceeded	{2 13 0 2 7 65}	INTEGER	c236		m		c233		–		–		c233		
6	callRequestResponseTimer	{2 13 0 2 7 77}	INTEGER	c232		m		m		–		–		m		
7	callTimeouts	{2 13 0 2 7 55}	INTEGER	c237		c238		c239		–		–		c239		
8	callsConnected	{2 13 0 2 7 53}	INTEGER	c237		c238		c239		–		–		c239		
9	clearCountsExceeded	{2 13 0 2 7 66}	INTEGER	c237		c238		c239		–		–		c239		
10	clearRequestResponseTimer	{2 13 0 2 7 79}	INTEGER	c232		m		m		–		–		m		
11	clearRequestRetransmissionCount	{2 13 0 2 7 81}	INTEGER	c232		m		m		–		–		m		
12	clearTimeouts	{2 13 0 2 7 56}	INTEGER	c237		c238		c239		–		–		c239		
13	dataPacketRetransmissionCount	{2 13 0 2 7 85}	INTEGER	c240		c241		c241		–		–		c241		
14	dataPacketsReceived	{2 13 0 2 7 51}	INTEGER	c237		c238		c239		–		–		c239		
15	dataPacketsSent	{2 13 0 2 7 50}	INTEGER	c237		c238		c239		–		–		c239		
16	dataRetransmissionTimerExpiries	{2 13 0 2 7 58}	INTEGER	c237		c238		c239		–		–		c239		
17	defaultPacketSizes	{2 13 0 2 7 103}	SEQUENCE	c232		m		m		–		–		m		
18	defaultThroughputClasses	{2 13 0 2 7 112}	SEQUENCE	c232		m		m		–		–		m		
19	defaultWindowSizes	{2 13 0 2 7 104}	SEQUENCE	c232		m		m		–		–		m		
20	extendedPacketSequenceNumbering	{2 13 0 2 7 49}	INTEGER	c232		m		m		–		–		m		
21	flowControlParameterNegotiation	{2 13 0 2 7 119}	BOOLEAN	c232		m		m		–		–		m		
22	interruptResponseTimer	{2 13 0 2 7 82}	INTEGER	c232		m		m		–		–		m		
23	localDTEAddress	{2 13 0 2 7 39}	SEQUENCE	c232		m		m		–		–		m		
24	logicalChannelAssignments	{2 13 0 2 7 48}	SEQUENCE	c232		m		m		–		–		c233		
25	maxActiveCircuits	{2 13 0 2 7 41}	CHOICE	c232		m		m		–		–		m		
26	minimumRecallTimer	{2 13 0 2 7 43}	INTEGER	c232		m		m		–		–		m		

Copyright International Organization for Standardization
Provided by IHS under license with ISO
No reproduction or networking permitted without license from IHS
Not for Resale

Table F.91 *(continued)*

				Set by create		Get		Replace		Add		Remove		Set to default		
Index	Attribute template label	Value of object identifier for attribute	Constraints and values	Status	Support	Status	Support	Status	Support	Status	Support	Status	Support	Status	Support	Additional information
27	"CCITT Rec. X.721 (1992) | ISO/IEC 10165-2:1992": nameBinding	{2 9 3 2 7 63}	OBJECT IDENTIFIER	c242		m		x		–		–		x		
28	"CCITT Rec. X.721 (1992) | ISO/IEC 10165-2:1992": objectClass	{2 9 3 2 7 65}	ObjectClass	c232		m		x		–		–		x		
29	"CCITT Rec. X.721 (1992) | ISO/IEC 10165-2:1992": octetsReceivedCounter	{2 9 3 2 7 78}	INTEGER	c237		c238		c239		–		–		c239		
30	"CCITT Rec. X.721 (1992) | ISO/IEC 10165-2:1992": octetsSentCounter	{2 9 3 2 7 80}	INTEGER	c237		c238		c239		–		–		c239		
31	"CCITT Rec. X.721 (1992) | ISO/IEC 10165-2:1992": operationalState	{2 9 3 2 7 35}	ENUMERATED	x		m		x		–		–		x		
32	"CCITT Rec. X.721 (1992) | ISO/IEC 10165-2:1992": packages	{2 9 3 2 7 66}	SET OF OBJECT IDENTIFIER	c243		c244		c245		c245		c245		c245		
33	protocolErrorsAccusedOf	{2 13 0 2 7 64}	INTEGER	c236		m		c233		–		–		c233		
34	protocolErrorsDetectedLocally	{2 13 0 2 7 63}	INTEGER	c236		m		c233		–		–		c233		
35	protocolVersionSupported	{2 13 0 2 7 38}	ENUMERATED	c236		m		c233		–		–		c233		
36	providerInitiatedDisconnects	{2 13 0 2 7 54}	INTEGER	c237		c238		c239		–		–		c239		
37	providerInitiatedResets	{2 13 0 2 7 59}	INTEGER	c237		c238		c239		–		–		c239		
38	registrationPermitted	{2 13 0 2 7 105}	BOOLEAN	c246		c247		c247		–		–		c247		
39	registrationRequestResponseTimer	{2 13 0 2 7 44}	INTEGER	c246		c247		c247		–		–		c247		
40	registrationRequestRetransmissionCount	{2 13 0 2 7 46}	INTEGER	c246		c247		c247		–		–		c247		
41	rejectResponseTimer	{2 13 0 2 7 86}	INTEGER	c248		c249		c249		–		–		c249		
42	rejectRetransmissionCount	{2 13 0 2 7 87}	INTEGER	c248		c249		c249		–		–		c249		
43	remotelyInitiatedResets	{2 13 0 2 7 57}	INTEGER	c237		c238		c239		–		–		c239		
44	remotelyInitiatedRestarts	{2 13 0 2 7 61}	INTEGER	c237		c238		c239		–		–		c239		
45	resetRequestResponseTimer	{2 13 0 2 7 78}	INTEGER	c232		m		m		–		–		m		
46	resetRequestRetransmissionCount	{2 13 0 2 7 80}	INTEGER	c232		m		m		–		–		m		
47	resetTimeouts	{2 13 0 2 7 60}	INTEGER	c237		c238		c239		–		–		c239		

--`,,```,,,,````-`-`,,`,,`,`,,`---

Copyright International Organization for Standardization
Provided by IHS under license with ISO
No reproduction or networking permitted without license from IHS

Table F.91 *(concluded)*

				Set by create		Get		Replace		Add		Remove		Set to default		
Index	Attribute template label	Value of object identifier for attribute	Constraints and values	Status	Support	Status	Support	Status	Support	Status	Support	Status	Support	Status	Support	Additional information
48	restartCountsExceeded	{2 13 0 2 7 62}	INTEGER	c237		c238		c239		–		–		c239		
49	restartRequestResponseTimer	{2 13 0 2 7 42}	INTEGER	c232		m		m		–		–		m		
50	restartRequestRetransmissionCount	{2 13 0 2 7 45}	INTEGER	c232		m		m		–		–		m		
51	sN-SAP	{2 13 0 2 7 18}	ObjectInstance	c236		m		c233		–		–		c233		
52	sN-ServiceProvider	{2 13 0 2 7 19}	ObjectInstance	c232		m		m		–		–		m		
53	throughputClassNegotiation	{2 13 0 2 7 168}	BOOLEAN	c232		m		m		–		–		m		
54	windowRotationTimer	{2 13 0 2 7 84}	INTEGER	c240		c241		c241		–		–		c241		
55	windowStatusTransmissionTimer	{2 13 0 2 7 83}	INTEGER	c250		c251		c251		–		–		c251		
56	x25PLEId	{2 13 0 2 7 36}	GraphicString	c242		m		x		–		–		x		
57	x25PLEMode	{2 13 0 2 7 120}	ENUMERATED	c232		m		m		–		–		c233		

c232: if G.1/30a then m else x
c233: if F.88/1b then x else –
c234: if F.90/3a then (if G.1/30a then o else x) else –
c235: if F.90/3a then m else –
c236: if F.88/1b or G.1/29a then x else –
c237: if F.90/6a and (F.88/1b or G.1/29a) then x else –
c238: if F.90/6a then m else –
c239: if F.90/6a and F.88/1b then x else –
c240: if F.90/8a then (if G.1/30a then m else x) else –
c241: if F.90/8a then m else –
c242: if G.1/30a then o else x
c243: if F.90/2a then (if G.1/30a then o else x) else –
c244: if F.90/2a then m else –
c245: if F.90/2a then x else –
c246: if F.90/10a then (if G.1/30a then m else x) else –
c247: f F.90/10a then m else –
c248: if F.90/9a then (if G.1/30a then m else x) else –
c249: if F.90/9a then m else –
c250: if F.90/7a then (if G.1/30a then m else x) else –
c251: if F.90/7a then m else –

Not for Resale

F.16.4 Attribute Groups

See Table F.92.

Table F.92 – x25PLE-DTE Attribute group support

				Get		Set to default		
Index	Attribute group template label	Value of object identifier for attribute group	Constraints and values	Status	Support	Status	Support	Additional information
1	"ITU-T Rec. X.723 (1993) | ISO/IEC 10165-5:1994" counters	{2 9 3 5 8 0}	callAttempts callEstablishmentRetryCountsExceeded protocolErrorsAccusedOf protocolErrorsDetectedLocally	m		–		
2	"ITU-T Rec. X.723 (1993) | ISO/IEC 10165-5:1994" counters	{2 9 3 5 8 0}	callTimeouts callsConnected clearCountsExceeded clearTimeouts dataPacketsReceived dataPacketsSent dataRetransmissionTimerExpiries "CCITT Rec. X.721 (1992) | ISO/IEC 10165-2:1992": octetsReceivedCounter "CCITT Rec. X.721 (1992) | ISO/IEC 10165-2:1992": octetsSentCounter providerInitiatedDisconnects providerInitiatedResets remotelyInitiatedResets remotelyInitiatedRestarts resetTimeouts restartCountsExceeded	c238		–		
3	"CCITT Rec. X.721 (1992) | ISO/IEC 10165-2:1992": state	{2 9 3 2 8 1}	"CCITT Rec. X.721 (1992) | ISO/IEC 10165-2:1992": administrativeState "CCITT Rec. X.721 (1992) | ISO/IEC 10165-2:1992": operationalState	m		–		

--`,,```,,,,````-`-`,,`,,`,`,,`---

Copyright International Organization for Standardization
Provided by IHS under license with ISO
No reproduction or networking permitted without license from IHS
Not for Resale

Copyright International Organization for Standardization
Provided by IHS under license with ISO
No reproduction or networking permitted without license from IHS
Not for Resale

F.16.5 Actions

See Table F.93.

Table F.93 – x25PLE-DTE Action support

Index	Action type template label	Value of object identifier for action type	Constraints and values	Status	Support	Additional information	Subindex	Action field name label	Constraints and values	Status	Support	Additional information
1	"ITU-T Rec. X.723 (1993) | ISO/IEC 10165-5:1994": activate	{2 9 3 5 9 0}		m			1.1	ActionInfo	**Information Syntax** SET OF SEQUENCE	m		
							1.1.1	identifier	OBJECT IDENTIFIER	m		
							1.1.2	significance	BOOLEAN	o		
							1.1.3	information	ANY DEFINED BY identifier	m		
							1.2	ActionReply	**Reply Syntax** SET OF SEQUENCE	m		
							1.2.1	identifier	OBJECT IDENTIFIER	m		
							1.2.2	significance	BOOLEAN	o		
							1.2.3	information	ANY DEFINED BY identifier	m		
2	"ITU-T Rec. X.723 (1993) | ISO/IEC 10165-5:1994": deactivate	{2 9 3 5 9 1}		m			2.1	ActionInfo	**Information Syntax** SET OF SEQUENCE	m		
							2.1.1	identifier	OBJECT IDENTIFIER	m		
							2.1.2	significance	BOOLEAN	o		
							2.1.3	information	ANY DEFINED BY identifier	m		
							2.2	ActionReply	**Reply Syntax** SET OF SEQUENCE	m		
							2.2.1	identifier	OBJECT IDENTIFIER	m		
							2.2.2	significance	BOOLEAN	o		
							2.2.3	information	ANY DEFINED BY identifier	m		

Copyright International Organization for Standardization
Provided by IHS under license with ISO
No reproduction or networking permitted without license from IHS
Not for Resale

F.16.6 Notifications

See Table F.94.

Table F.94 – x25PLE-DTE Notification support

					Support									
Index	Notification type templace label	Value of object identifier for notification type	Constraints and values	Status	Con-firmed	Non-con-firmed	Additional information	Subindex	Notification field name label	Value of object identifier of attribute type associated with field	Constraints and values	Status	Support	Additional information
1	"CCITT Rec. X.721 (1992) | ISO/IEC 10165-2:1992": communicationsAlarm	{2 9 3 2 10 2}		m			notificationData	1.1	AlarmInfo		**Information Syntax** SEQUENCE	m		
								1.1.1	probableCause	{2 9 3 2 7 18}	CHOICE	m		
								1.1.1.1	globalValue	–	OBJECT IDENTIFIER	o.1		
								1.1.1.2	localValue	–	INTEGER	o.1		
								1.1.2	specificProblems	{2 9 3 2 7 27}	SET OF CHOICE	o		
								1.1.2.1	OBJECT IDENTIFIER	–	OBJECT IDENTIFIER	c:o.2		
								1.1.2.2	INTEGER	–	INTEGER	c:o.2		
								1.1.3	perceivedSeverity	{2 9 3 2 7 17}	ENUMERATED	m		
								1.1.4	backedUpStatus	{2 9 3 2 7 11}	BOOLEAN	o		
								1.1.5	backUpObject	{2 9 3 2 7 40}	ObjectInstance	o		
								1.1.6	trendIndication	{2 9 3 2 7 30}	ENUMERATED	o		
								1.1.7	thresholdInfo	{2 9 3 2 7 29}	SEQUENCE	o		
								1.1.7.1	triggeredThreshold	–	AttributeId	c:m		
								1.1.7.2	observedValue	–	CHOICE	c:m		
								1.1.7.2.1	integer	–	INTEGER	c:o.3		
								1.1.7.2.2	real	–	REAL	c:o.3		

Copyright International Organization for Standardization
Provided by IHS under license with ISO
No reproduction or networking permitted without license from IHS
Not for Resale

Table F.94 *(continued)*

Index	Notification type templace label	Value of object identifier for notification type	Constraints and values	Status	Support: Con-firmed	Support: Non-con-firmed	Additional information	Subindex	Notification field name label	Value of object identifier of attribute type associated with field	Constraints and values	Status	Support	Additional information
								1.1.7.3	thresholdLevel	–	CHOICE	c:o		
								1.1.7.3.1	up	–	SEQUENCE	c:o.4		
								1.1.7.3.1.1	high	–	CHOICE	c:m		
								1.1.7.3.1.1.1	integer	–	INTEGER	c:o.5		
								1.1.7.3.1.1.2	real	–	REAL	c:o.5		
								1.1.7.3.1.2	low	–	CHOICE	c:o		
								1.1.7.3.1.2.1	integer	–	INTEGER	c:o.6		
								1.1.7.3.1.2.2	real	–	REAL	c:o.6		
								1.1.7.3.2	down	–	SEQUENCE	c:o.4		
								1.1.7.3.2.1	high	–	CHOICE	c:m		
								1.1.7.3.2.1.1	integer	–	INTEGER	c:o.7		
								1.1.7.3.2.1.2	real	–	REAL	c:o.7		
								1.1.7.3.2.2	low	–	CHOICE	c:m		
								1.1.7.3.2.2.1	integer	–	INTEGER	c:o.8		
								1.1.7.3.2.2.2	real	–	REAL	c:o.8		
								1.1.7.4	armTime	–	GeneralizedTime	c:o		
								1.1.8	notificationIdentifier	{2 9 3 2 7 16}	INTEGER	o		
								1.1.9	correlatedNotifications	{2 9 3 2 7 12}	SET OF SEQUENCE	o		
								1.1.9.1	correlatedNotifications	{2 9 3 2 7 12}	SET OF INTEGER	c:m		
								1.1.9.2	sourceObjectInst	–	ObjectInstance	c:o		
								1.1.10	stateChangeDefinition	{2 9 3 2 7 28}	SET OF SEQUENCE	o		
								1.1.10.1	attributeID	–	AttributeId	c:m		
								1.1.10.2	oldAttributeValue	–	ANY DEFINED BY attributeID	c:o		
								1.1.10.3	newAttributeValue	–	ANY DEFINED BY attributeID	c:m		
								1.1.11	monitoredAttributes	{2 9 3 2 7 15}	SET OF Attribute	o		

Copyright International Organization for Standardization
Provided by IHS under license with ISO
No reproduction or networking permitted without license from IHS
Not for Resale

Table F.94 *(continued)*

					Support									
Index	Notification type templace label	Value of object identifier for notification type	Constraints and values	Status	Con-firmed	Non-con-firmed	Additional information	Subindex	Notification field name label	Value of object identifier of attribute type associated with field	Constraints and values	Status	Support	Additional information
								1.1.12	proposedRepairActions	{2 9 3 2 7 19}	SET OF CHOICE	o		
								1.1.12.1	OBJECT IDENTIFIER	–	OBJECT IDENTIFIER	c:o.9		
								1.1.12.2	INTEGER	–	INTEGER	c:o.9		
								1.1.13	additionalText	{2 9 3 2 7 7}	GraphicString	o		
								1.1.14	additionalInformation	{2 9 3 2 7 6}	SET OF SEQUENCE	o		
								1.1.14.1	identifier	–	OBJECT IDENTIFIER	c:m		
								1.1.14.2	significance	–	BOOLEAN	c:o		
								1.1.14.3	information	–	ANY DEFINED BY identifier	c:m		
2	"CCITT Rec. X.721 (1992) | ISO/IEC 10165-2:1992": objectCreation	{2 9 3 2 10 6}		m				2.1	ObjectInfo		**Information Syntax** SEQUENCE	m		
								2.1.1	sourceIndicator	{2 9 3 2 7 26}	ENUMERATED	o		
								2.1.2	attributeList	{2 9 3 2 7 9}	SET OF Attribute	o		
								2.1.3	notificationIdentifier	{2 9 3 2 7 16}	INTEGER	o		
								2.1.4	correlatedNotifications	{2 9 3 2 7 12}	SET OF SEQUENCE	o		
								2.1.4.1	correlatedNotifications	{2 9 3 2 7 12}	SET OF INTEGER	c:m		
								2.1.4.2	sourceObjectInst	–	ObjectInstance	c:o		
								2.1.5	additionalText	{2 9 3 2 7 7}	GraphicString	o		
								2.1.6	additionalInformation	{2 9 3 2 7 6}	SET OF SEQUENCE	o		

Copyright International Organization for Standardization
Provided by IHS under license with ISO
No reproduction or networking permitted without license from IHS
Not for Resale

Table F.94 *(continued)*

Index	Notification type templace label	Value of object identifier for notification type	Constraints and values	Status	Support: Con-firmed	Support: Non-con-firmed	Additional information	Subindex	Notification field name label	Value of object identifier of attribute type associated with field	Constraints and values	Status	Support	Additional information
								2.1.6.1	identifier	–	OBJECT IDENTIFIER	c:m		
								2.1.6.2	significance	–	BOOLEAN	c:o		
								2.1.6.3	information	–	ANY DEFINED BY identifier	c:m		
3	"CCITT Rec. X.721 (1992) | ISO/IEC 10165-2:1992": objectDeletion	{2 9 3 2 10 7}		m				3.1	ObjectInfo		**Information Syntax** SEQUENCE	m		
								3.1.1	sourceIndicator	{2 9 3 2 7 26}	ENUMERATED	o		
								3.1.2	attributeList	{2 9 3 2 7 9}	SET OF Attribute	o		
								3.1.3	notificationIdentifier	{2 9 3 2 7 16}	INTEGER	o		
								3.1.4	correlatedNotifications	{2 9 3 2 7 12}	SET OF SEQUENCE	o		
								3.1.4.1	correlatedNotifications	{2 9 3 2 7 12}	SET OF INTEGER	c:m		
								3.1.4.2	sourceObjectInst	–	ObjectInstance	c:o		
								3.1.5	additionalText	{2 9 3 2 7 7}	GraphicString	o		
								3.1.6	additionalInformation	{2 9 3 2 7 6}	SET OF SEQUENCE	o		
								3.1.6.1	identifier	–	OBJECT IDENTIFIER	c:m		
								3.1.6.2	significance	–	BOOLEAN	c:o		
								3.1.6.3	information	–	ANY DEFINED BY identifier	c:m		

Copyright International Organization for Standardization
Provided by IHS under license with ISO
No reproduction or networking permitted without license from IHS
Not for Resale

Table F.94 *(concluded)*

					Support									
Index	Notification type templace label	Value of object identifier for notification type	Constraints and values	Status	Con-firmed	Non-con-firmed	Additional information	Subindex	Notification field name label	Value of object identifier of attribute type associated with field	Constraints and values	Status	Support	Additional information
4	"CCITT Rec. X.721 (1992) | ISO/IEC 10165-2:1992": stateChange	{2 9 3 2 10 14}		m				4.1	StateChangeInfo		**Information Syntax** SEQUENCE	m		
								4.1.1	sourceIndicator	{2 9 3 2 7 26}	ENUMERATED	o		
								4.1.2	attributeIdentifierList	{2 9 3 2 7 8}	SET OF AttributeId	o		
								4.1.3	stateChangeDefinition	{2 9 3 2 7 28}	SET OF SEQUENCE	m		
								4.1.3.1	attributeID	–	AttributeId	m		
								4.1.3.2	oldAttributeValue	–	ANY DEFINED BY attributeID	o		
								4.1.3.3	newAttributeValue	–	ANY DEFINED BY attributeID	m		
								4.1.4	notificationIdentifier	{2 9 3 2 7 16}	INTEGER	o		
								4.1.5	correlatedNotifications	{2 9 3 2 7 12}	SET OF SEQUENCE	o		
								4.1.5.1	correlatedNotifications	{2 9 3 2 7 12}	SET OF INTEGER	c:m		
								4.1.5.2	sourceObjectInst	–	ObjectInstance	c:o		
								4.1.6	additionalText	{2 9 3 2 7 7}	GraphicString	o		
								4.1.7	additionalInformation	{2 9 3 2 7 6}	SET OF SEQUENCE	o		
								4.1.7.1	identifier	–	OBJECT IDENTIFIER	c:m		
								4.1.7.2	significance	–	BOOLEAN	c:o		
								4.1.7.3	information	–	ANY DEFINED BY identifier	c:m		

--`,,```,,,,````-`-`,,`,,`,`,,`---

F.16.7 Parameters

See Table F.95.

Table F.95 – x25PLE-DTE Parameter support

Index	Parameter template label	Value of object identifier for parameter	Constraints and values	Status	Support	Additional information
1	notificationData	{2 13 0 2 5 7}	EVENT-INFO communicationsAlarm	m		

F.17 The X25 PLE DCE initial values managed object

F.17.1 Statement of conformance to the managed object class

See Table F.96.

Table F.96 – x25PLEIVMO-DCE Managed object class support

Index	Managed object class template label	Value of object identifier for class	Support of all mandatory features? (Y/N)	Is the actual class the same as the managed object class to which conformance is claimed? (Y/N)
1	x25PLEIVMO-DCE	{2 13 0 2 3 28}		

If the answer to the actual class question in the managed object class support Table F.96 is No, the supplier of the implementation shall fill in the actual class support Table F.97.

Table F.97 – x25PLEIVMO-DCE Actual class support

Index	Managed object class template for actual class	Value of object identifier for managed object class definition of actual class	Additional information

F.17.2 Packages

The supplier of the implementation shall state whether or not the packages specified by this managed object of this class are supported, in Table F.98.

Table F.98 – x25PLEIVMO-DCE Package support

Index	Package template label	Value of object identifier for package	Constraints and values	Status	Support	Additional information
1	"CCITT Rec. X.721 (1992) | ISO/IEC 10165-2:1992": topPackage		Mandatory	m		
2	"CCITT Rec. X.721 (1992) | ISO/IEC 10165-2:1992": packagesPackage	{2 9 3 2 4 16}	"any registered package, other than this package has been instantiated"	c252		
3	"CCITT Rec. X.721 (1992) | ISO/IEC 10165-2:1992": allomorphicPackage	{2 9 3 2 4 17}	"if an object supports allomorphism"	c253		
4	x25PLEIVMO-P		Mandatory	m		
c252: if F.98/3a then m else – c253: if F.96/1b then – else m						

F.17.3 Attributes

The supplier of the implementation shall state whether or not the attributes specified by all of the packages instantiated in a managed object of this class are supported, in the Support and Additional information columns of Table F.99. The supplier of the implementation shall indicate support for each of the operations for each attribute supported.

Copyright International Organization for Standardization
Provided by IHS under license with ISO
No reproduction or networking permitted without license from IHS
Not for Resale

Copyright International Organization for Standardization
Provided by IHS under license with ISO
No reproduction or networking permitted without license from IHS
Not for Resale

Table F.99 – x25PLEIVMO-DCE Attribute support

				Set by create		Get		Replace		Add		Remove		Set to default		
Index	Attribute template label	Value of object identifier for attribute	Constraints and values	Status	Support	Status	Support	Status	Support	Status	Support	Status	Support	Status	Support	Additional information
1	"CCITT Rec. X.721 (1992) | ISO/IEC 10165-2:1992": allomorphs	{2 9 3 2 7 50}	SET OF ObjectClass	c254		c255		–		–		–		–		
2	defaultPacketSizes	{2 13 0 2 7 103}	SEQUENCE	m		m		m		–		–		m		
3	defaultThroughputClasses	{2 13 0 2 7 112}	SEQUENCE	m		m		m		–		–		m		
4	defaultWindowSizes	{2 13 0 2 7 104}	SEQUENCE	m		m		m		–		–		m		
5	flowControlParameterNegotiation	{2 13 0 2 7 119}	BOOLEAN	m		m		m		–		–		m		
6	localDTEAddress	{2 13 0 2 7 39}	SEQUENCE	m		m		m		–		–		c256		
7	logicalChannelAssignments	{2 13 0 2 7 48}	SEQUENCE	m		m		m		–		–		c256		
8	"CCITT Rec. X.721 (1992) | ISO/IEC 10165-2:1992": nameBinding	{2 9 3 2 7 63}	OBJECT IDENTIFIER	o		m		x		–		–		x		
9	"CCITT Rec. X.721 (1992) | ISO/IEC 10165-2:1992": objectClass	{2 9 3 2 7 65}	ObjectClass	m		m		x		–		–		x		
10	"CCITT Rec. X.721 (1992) | ISO/IEC 10165-2:1992": packages	{2 9 3 2 7 66}	SET OF OBJECT IDENTIFIER	c257		c258		c259		c259		c259		c259		
11	sN-ServiceProvider	{2 13 0 2 7 19}	ObjectInstance	m		m		m		–		–		c256		
12	throughputClassNegotiation	{2 13 0 2 7 168}	BOOLEAN	m		m		m		–		–		m		
13	x25PLEIVMOId	{2 13 0 2 7 37}	GraphicString	o		m		x		–		–		x		
14	x25PLEMode	{2 13 0 2 7 120}	ENUMERATED	m		m		m		–		–		c256		

c254: if F.98/3a then o else –
c255: if F.98/3a then m else –
c256: if F.96/1b then x else –
c257: if F.98/2a then o else –
c258: if F.98/2a then m else –
c259: if F.98/2a then x else –

Copyright International Organization for Standardization
Provided by IHS under license with ISO
No reproduction or networking permitted without license from IHS
Not for Resale

F.17.4 Notifications

See Table F.100.

Table F.100 – x25PLEIVMO-DCE Notification support

					Support									
Index	Notification type templace label	Value of object identifier for notification type	Constraints and values	Status	Con-firmed	Non-con-firmed	Additional information	Subindex	Notification field name label	Value of object identifier of attribute type associated with field	Constraints and values	Status	Support	Additional information
1	"CCITT Rec. X.721 (1992) | ISO/IEC 10165-2:1992": objectCreation	{2 9 3 2 10 6}		m				1.1	ObjectInfo		**Information Syntax** SEQUENCE	m		
								1.1.1	sourceIndicator	{2 9 3 2 7 26}	ENUMERATED	o		
								1.1.2	attributeList	{2 9 3 2 7 9}	SET OF Attribute	o		
								1.1.3	notificationIdentifier	{2 9 3 2 7 16}	INTEGER	o		
								1.1.4	correlatedNotifications	{2 9 3 2 7 12}	SET OF SEQUENCE	o		
								1.1.4.1	correlatedNotifications	{2 9 3 2 7 12}	SET OF INTEGER	c:m		
								1.1.4.2	sourceObjectInst	–	ObjectInstance	c:o		
								1.1.5	additionalText	{2 9 3 2 7 7}	GraphicString	o		
								1.1.6	additionalInformation	{2 9 3 2 7 6}	SET OF SEQUENCE	o		
								1.1.6.1	identifier	–	OBJECT IDENTIFIER	c:m		
								1.1.6.2	significance	–	BOOLEAN	c:o		
								1.1.6.3	information	–	ANY DEFINED BY identifier	c:m		

Copyright International Organization for Standardization
Provided by IHS under license with ISO
No reproduction or networking permitted without license from IHS
Not for Resale

Table F.100 *(concluded)*

					Support									
Index	Notification type templace label	Value of object identifier for notification type	Constraints and values	Status	Con-firmed	Non-con-firmed	Additional information	Subindex	Notification field name label	Value of object identifier of attribute type associated with field	Constraints and values	Status	Support	Additional information
2	"CCITT Rec. X.721 (1992) | ISO/IEC 10165-2:1992": objectDeletion	{2 9 3 2 10 7}		m				2.1	ObjectInfo		**Information Syntax** SEQUENCE	m		
								2.1.1	sourceIndicator	{2 9 3 2 7 26}	ENUMERATED	o		
								2.1.2	attributeList	{2 9 3 2 7 9}	SET OF Attribute	o		
								2.1.3	notificationIdentifier	{2 9 3 2 7 16}	INTEGER	o		
								2.1.4	correlatedNotifications	{2 9 3 2 7 12}	SET OF SEQUENCE	o		
								2.1.4.1	correlatedNotifications	{2 9 3 2 7 12}	SET OF INTEGER	c:m		
								2.1.4.2	sourceObjectInst	–	ObjectInstance	c:o		
								2.1.5	additionalText	{2 9 3 2 7 7}	GraphicString	o		
								2.1.6	additionalInformation	{2 9 3 2 7 6}	SET OF SEQUENCE	o		
								2.1.6.1	identifier	–	OBJECT IDENTIFIER	c:m		
								2.1.6.2	significance	–	BOOLEAN	c:o		
								2.1.6.3	information	–	ANY DEFINED BY identifier	c:m		

F.18 The X25 PLE DTE initial values managed object

F.18.1 Statement of conformance to the managed object class

See Table F.101.

Table F.101 – x25PLEIVMO-DTE Managed object class support

Index	Managed object class template label	Value of object identifier for class	Support of all mandatory features? (Y/N)	Is the actual class the same as the managed object class to which conformance is claimed? (Y/N)
1	x25PLEIVMO-DCE	{2 13 0 2 3 28}		

If the answer to the actual class question in the managed object class support Table F.101 is No, the supplier of the implementation shall fill in the actual class support Table F.102.

Table F.102 – x25PLEIVMO-DTE Actual class support

Index	Managed object class template for actual class	Value of object identifier for managed object class definition of actual class	Additional information

F.18.2 Packages

The supplier of the implementation shall state whether or not the packages specified by this managed object of this class are supported, in Table F.103.

Table F.103 – x25PLEIVMO-DTE Package support

Index	Package template label	Value of object identifier for package	Constraints and values	Status	Support	Additional information
1	"CCITT Rec. X.721 (1992) | ISO/IEC 10165-2:1992": topPackage		Mandatory	m		
2	"CCITT Rec. X.721 (1992) | ISO/IEC 10165-2:1992": packagesPackage	{2 9 3 2 4 16}	"any registered package, other than this package has been instantiated"	c260		
3	"CCITT Rec. X.721 (1992) | ISO/IEC 10165-2:1992": allomorphicPackage	{2 9 3 2 4 17}	"if an object supports allomorphism"	c261		
4	x25PLEIVMO-DTE-P		Mandatory	m		
5	x25PLEIVMO-P		Mandatory	m		
6	receivingWindowRotationRecoveryProcedures-P	{2 13 0 2 4 12}	"The optional window rotation recovery procedures are implemented at a receiving DTE"	o		
7	transmittingWindowRotationRecoveryProcedures-P	{2 13 0 2 4 13}	"The optional window rotation recovery procedures are implemented at a transmitting DTE"	o		
8	packetRetransmissionProcedures-P	{2 13 0 2 4 14}	"The optional packet retransmission procedures are implemented"	o		
9	onlineRegistration-P	{2 13 0 2 4 11}	"The optional online registration facility is implemented"	o		
c260: if F.103/3a or F.103/6a or F.103/7a or F.103/8a or F.103/9a then m else – c261: if F.101/1b then – else m						

F.18.3 Attributes

The supplier of the implementation shall state whether or not the attributes specified by all of the packages instantiated in a managed object of this class are supported, in the Support and Additional information columns of Table F.104. The supplier of implementation shall indicate support for each of the operations for each attribute supported.

Copyright International Organization for Standardization
Provided by IHS under license with ISO
No reproduction or networking permitted without license from IHS
Not for Resale

Copyright International Organization for Standardization
Provided by IHS under license with ISO
No reproduction or networking permitted without license from IHS

---`,,```,,,,````-`-`,,`,,`,`,,`---

Table F.104 – x25PLEIVMO-DTE Attribute support

				Set by create		Get		Replace		Add		Remove		Set to default		
Index	Attribute template label	Value of object identifier for attribute	Constraints and values	Status	Support	Status	Support	Status	Support	Status	Support	Status	Support	Status	Support	Additional information
1	"CCITT Rec. X.721 (1992) | ISO/IEC 10165-2:1992": allomorphs	{2 9 3 2 7 50}	SET OF ObjectClass	c262		c263		–		–		–		–		
2	callDeflectionSubscription	{2 13 0 2 7 114}	BOOLEAN	m		m		m		–		–		m		
3	callRequestResponseTimer	{2 13 0 2 7 77}	INTEGER	m		m		m		–		–		m		
4	clearRequestResponseTimer	{2 13 0 2 7 79}	INTEGER	m		m		m		–		–		m		
5	clearRequestRetransmissio nCount	{2 13 0 2 7 81}	INTEGER	m		m		m		–		–		m		
6	dataPacketRetransmissio nCount	{2 13 0 2 7 85}	INTEGER	c264		c264		c264		–		–		c264		
7	defaultPacketSizes	{2 13 0 2 7 103}	SEQUENCE	m		m		m		–		–		m		
8	defaultThroughputClasses	{2 13 0 2 7 112}	SEQUENCE	m		m		m		–		–		m		
9	defaultWindowSizes	{2 13 0 2 7 104}	SEQUENCE	m		m		m		–		–		m		
10	extendedPacketSequenceNu mbering	{2 13 0 2 7 49}	INTEGER	m		m		m		–		–		m		
11	flowControlParameterNe gotiation	{2 13 0 2 7 119}	BOOLEAN	m		m		m		–		–		m		
12	interruptResponseTimer	{2 13 0 2 7 82}	INTEGER	m		m		m		–		–		m		
13	localDTEAddress	{2 13 0 2 7 39}	SEQUENCE	m		m		m		–		–		c265		
14	logicalChannelAssignments	{2 13 0 2 7 48}	SEQUENCE	m		m		m		–		–		c265		
15	maxActiveCircuits	{2 13 0 2 7 41}	CHOICE	m		m		m		–		–		m		
16	minimumRecallTimer	{2 13 0 2 7 43}	INTEGER	m		m		m		–		–		m		
17	"CCITT Rec. X.721 (1992) | ISO/IEC 10165-2:1992": nameBinding	{2 9 3 2 7 63}	OBJECT IDENTIFIER	o		m		x		–		–		x		
18	"CCITT Rec. X.721 (1992) | ISO/IEC 10165-2:1992": objectClass	{2 9 3 2 7 65}	ObjectClass	m		m		x		–		–		x		
19	"CCITT Rec. X.721 (1992) | ISO/IEC 10165-2:1992": packages	{2 9 3 2 7 66}	SET OF OBJECT IDENTIFIER	c266		c267		c268		c268		c268		c268		

Not for Resale

Copyright International Organization for Standardization
Provided by IHS under license with ISO
No reproduction or networking permitted without license from IHS
Not for Resale

Table F.104 *(concluded)*

				Set by create		Get		Replace		Add		Remove		Set to default		
Index	Attribute template label	Value of object identifier for attribute	Constraints and values	Status	Support	Status	Support	Status	Support	Status	Support	Status	Support	Status	Support	Additional information
20	registrationPermitted	{2 13 0 2 7 105}	BOOLEAN	c269		c269		c269		–		–		c269		
21	registrationRequestResponseTimer	{2 13 0 2 7 44}	INTEGER	c269		c269		c269		–		–		c269		
22	registrationRequestRetransmissionCount	{2 13 0 2 7 46}	INTEGER	c269		c269		c269		–		–		c269		
23	rejectResponseTimer	{2 13 0 2 7 86}	INTEGER	c270		c270		c270		–		–		c270		
24	rejectRetransmissionCount	{2 13 0 2 7 87}	INTEGER	c270		c270		c270		–		–		c270		
25	resetRequestResponseTimer	{2 13 0 2 7 78}	INTEGER	m		m		m		–		–		m		
26	resetRequestRetransmissionCount	{2 13 0 2 7 80}	INTEGER	m		m		m		–		–		m		
27	restartRequestResponseTimer	{2 13 0 2 7 42}	INTEGER	m		m		m		–		–		m		
28	restartRequestRetransmissionCount	{2 13 0 2 7 45}	INTEGER	m		m		m		–		–		m		
29	sN-ServiceProvider	{2 13 0 2 7 19}	ObjectInstance	m		m		m		–		–		c265		
30	throughputClassNegotiation	{2 13 0 2 7 168}	BOOLEAN	m		m		m		–		–		m		
31	windowRotationTimer	{2 13 0 2 7 84}	INTEGER	c264		c264		c264		–		–		c264		
32	windowStatusTransmissionTimer	{2 13 0 2 7 83}	INTEGER	c271		c271		c271		–		–		c271		
33	x25PLEIVMOId	{2 13 0 2 7 37}	GraphicString	o		m		x		–		–		x		
34	x25PLEMode	{2 13 0 2 7 120}	ENUMERATED	m		m		m		–		–		c265		

c262: if F.103/3a then o else –
c263: if F.103/3a then m else –
c264: if F.103/7a then m else –
c265: if F.101/1b then x else –
c266: if F.103/2a then o else –
c267: if F.103/2a then m else –
c268: if F.103/2a then x else –
c269: if F.103/9a then m else –
c270: if F.103/8a then m else –
c271: if F.103/6a then m else –

Copyright International Organization for Standardization
Provided by IHS under license with ISO
No reproduction or networking permitted without license from IHS
Not for Resale

F.18.4 Notifications

See Table F.105.

Table F.105 – x25PLEIVMO-DTE Notification support

					Support									
Index	Notification type templace label	Value of object identifier for notification type	Constraints and values	Status	Con-firmed	Non-con-firmed	Additional information	Subindex	Notification field name label	Value of object identifier of attribute type associated with field	Constraints and values	Status	Support	Additional information
1	"CCITT Rec. X.721 (1992) | ISO/IEC 10165-2:1992": objectCreation	{2 9 3 2 10 6}		m				1.1	ObjectInfo		**Information Syntax** SEQUENCE	m		
								1.1.1	sourceIndicator	{2 9 3 2 7 26}	ENUMERATED	o		
								1.1.2	attributeList	{2 9 3 2 7 9}	SET OF Attribute	o		
								1.1.3	notificationIdentifier	{2 9 3 2 7 16}	INTEGER	o		
								1.1.4	correlatedNotifications	{2 9 3 2 7 12}	SET OF SEQUENCE	o		
								1.1.4.1	correlatedNotifications	{2 9 3 2 7 12}	SET OF INTEGER	c:m		
								1.1.4.2	sourceObjectInst	–	ObjectInstance	c:o		
								1.1.5	additionalText	{2 9 3 2 7 7}	GraphicString	o		
								1.1.6	additionalInformation	{2 9 3 2 7 6}	SET OF SEQUENCE	o		
								1.1.6.1	identifier	–	OBJECT IDENTIFIER	c:m		
								1.1.6.2	significance	–	BOOLEAN	c:o		
								1.1.6.3	information	–	ANY DEFINED BY identifier	c:m		

Copyright International Organization for Standardization
Provided by IHS under license with ISO
No reproduction or networking permitted without license from IHS
Not for Resale

Table F.105 *(concluded)*

					Support									
Index	Notification type templace label	Value of object identifier for notification type	Constraints and values	Status	Con-firmed	Non-con-firmed	Additional information	Subindex	Notification field name label	Value of object identifier of attribute type associated with field	Constraints and values	Status	Support	Additional information
2	"CCITT Rec. X.721 (1992) | ISO/IEC 10165-2:1992": objectDeletion	{2 9 3 2 10 7}		m				2.1	ObjectInfo		**Information Syntax** SEQUENCE	m		
								2.1.1	sourceIndicator	{2 9 3 2 7 26}	ENUMERATED	o		
								2.1.2	attributeList	{2 9 3 2 7 9}	SET OF Attribute	o		
								2.1.3	notificationIdentifier	{2 9 3 2 7 16}	INTEGER	o		
								2.1.4	correlatedNotifications	{2 9 3 2 7 12}	SET OF SEQUENCE	o		
								2.1.4.1	correlatedNotifications	{2 9 3 2 7 12}	SET OF INTEGER	c:m		
								2.1.4.2	sourceObjectInst	–	ObjectInstance	c:o		
								2.1.5	additionalText	{2 9 3 2 7 7}	GraphicString	o		
								2.1.6	additionalInformation	{2 9 3 2 7 6}	SET OF SEQUENCE	o		
								2.1.6.1	identifier	–	OBJECT IDENTIFIER	c:m		
								2.1.6.2	significance	–	BOOLEAN	c:o		
								2.1.6.3	information	–	ANY DEFINED BY identifier	c:m		

Annex G[7)]

MRCS proforma form name binding

(This annex forms an integral part of this Recommendation | International Standard)

G.1 Introduction

The purpose of this MRCS proforma for name bindings is to provide a mechanism for a supplier which claims conformance to a name binding to provide conformance information in a standard form.

G.2 Instructions for completing the MRCS proforma for name binding to produce a MRCS[8)]

The supplier of the implementation shall state which items are supported in the tables below and if necessary provide additional information.

---

7) **Copyright release for MRCS proforma**

Users of this Recommendation | International Standard may freely reproduce the MRCS proforma in this annex so that it can be used for its intended purpose, and may further publish the completed MRCS.

8) Instructions for MRCS proforma are found in clause 5 of ITU-T Rec. X.724 | ISO/IEC 10165-6.

Copyright International Organization for Standardization
Provided by IHS under license with ISO
No reproduction or networking permitted without license from IHS
Not for Resale

Copyright International Organization for Standardization
Provided by IHS under license with ISO
No reproduction or networking permitted without license from IHS
Not for Resale

G.3 Statement of conformance to the name binding

See Table G.1.

Table G.1 – Name Binding support

Index	Name binding template label	Value of object identifier for name binding	Constraints and values	Status	Support	Additional information	Subindex	Operation	Constraints and values	Status	Support	Additional information
1	cLNS-networkEntity-Automatic	{2 13 0 2 6 16}	Superior class: networkEntity AND SUBCLASSES	o			1.1	Create support		x		
							1.1.1	Create with reference object		–		
							1.1.2	Create with automatic instance naming		–		
							1.2	Delete support		x		
							1.2.1	Delete only if no contained objects		–		
							1.2.2	Delete contained objects		–		
2	cLNS-networkEntity-Management	{2 13 0 2 6 3}	Superior class: networkEntity AND SUBCLASSES	o			2.1	Create support		m		
							2.1.1	Create with reference object		–		
							2.1.2	Create with automatic instance naming		–		
							2.2	Delete support		m		
							2.2.1	Delete only if no contained objects		m		
							2.2.2	Delete contained objects		x		
3	"ITU-T Rec. X.723 (1993) | ISO/IEC 10165-5:1994": clProtocolMachine-entity	{2 9 3 5 6 0}	Superior class: "ITU-T Rec. X.723 (1993) | ISO/IEC 10165-5:1994": communicationsEntity AND SUBCLASSES	o			3.1	Create support		x		
							3.1.1	Create with reference object		–		
							3.1.2	Create with automatic instance naming		–		
							3.2	Delete support		x		
							3.2.1	Delete only if no contained objects		–		
							3.2.2	Delete contained objects		–		

Copyright International Organization for Standardization
Provided by IHS under license with ISO
No reproduction or networking permitted without license from IHS
Not for Resale

Table G.1 *(continued)*

Index	Name binding template label	Value of object identifier for name binding	Constraints and values	Status	Support	Additional information	Subindex	Operation	Constraints and values	Status	Support	Additional information
4	cONS-networkEntity-Automatic	{2 13 0 2 6 17}	Superior class: networkEntity AND SUBCLASSES	o			4.1	Create support		x		
							4.1.1	Create with reference object		–		
							4.1.2	Create with automatic instance naming		–		
							4.2	Delete support		x		
							4.2.1	Delete only if no contained objects		–		
							4.2.2	Delete contained objects		–		
5	cONS-networkEntity-Management	{2 13 0 2 6 8}	Superior class: networkEntity AND SUBCLASSES	o			5.1	Create support		m		
							5.1.1	Create with reference object		–		
							5.1.2	Create with automatic instance naming		–		
							5.2	Delete support		m		
							5.2.1	Delete only if no contained objects		m		
							5.2.2	Delete contained objects		x		
6	"ITU-T Rec. X.723 (1993) | ISO/IEC 10165-5:1994": coProtocolMachine-entity	{2 9 3 5 6 2}	Superior class: "ITU-T Rec. X.723 (1993) | ISO/IEC 10165-5:1994": communicationsEntity AND SUBCLASSES	o			6.1	Create support		x		
							6.1.1	Create with reference object		–		
							6.1.2	Create with automatic instance naming		–		
							6.2	Delete support		x		
							6.2.1	Delete only if no contained objects		–		
							6.2.2	Delete contained objects		–		

Copyright International Organization for Standardization
Provided by IHS under license with ISO
No reproduction or networking permitted without license from IHS
Not for Resale

Table G.1 *(continued)*

Index	Name binding template label	Value of object identifier for name binding	Constraints and values	Status	Support	Additional information	Subindex	Operation	Constraints and values	Status	Support	Additional information
7	dSeriesCountsvirtualCall-DCE-Automatic	{2 13 0 2 6 32}	Superior class: virtualCall-DCE AND SUBCLASSES	o			7.1	Create support		x		
							7.1.1	Create with reference object		–		
							7.1.2	Create with automatic instance naming		–		
							7.2	Delete support		m		
							7.2.1	Delete only if no contained objects		–		
							7.2.2	Delete contained objects		–		
8	dSeriesCountsvirtualCall-DCE-Management	{2 13 0 2 6 33}	Superior class: virtualCall-DCE AND SUBCLASSES	o			8.1	Create support		m		
							8.1.1	Create with reference object		–		
							8.1.2	Create with automatic instance naming		–		
							8.2	Delete support		m		
							8.2.1	Delete only if no contained objects		–		
							8.2.2	Delete contained objects		–		
9	linkage-cLNS-Automatic	{2 13 0 2 6 22}	Superior class: cLNS AND SUBCLASSES	o			9.1	Create support		x		
							9.1.1	Create with reference object		–		
							9.1.2	Create with automatic instance naming		–		
							9.2	Delete support		x		
							9.2.1	Delete only if no contained objects		–		
							9.2.2	Delete contained objects		–		

Copyright International Organization for Standardization
Provided by IHS under license with ISO
No reproduction or networking permitted without license from IHS
Not for Resale

Table G.1 *(continued)*

Index	Name binding template label	Value of object identifier for name binding	Constraints and values	Status	Support	Additional information	Subindex	Operation	Constraints and values	Status	Support	Additional information
10	linkage-cLNS-Management	{2 13 0 2 6 20}	Superior class: cLNS AND SUBCLASSES	o			10.1	Create support		m		
							10.1.1	Create with reference object		m		
							10.1.2	Create with automatic instance naming		–		
							10.2	Delete support		m		
							10.2.1	Delete only if no contained objects		–		
							10.2.2	Delete contained objects		–		
11	linkage-cONS-Automatic	{2 13 0 2 6 23}	Superior class: cONS AND SUBCLASSES	o			11.1	Create support		x		
							11.1.1	Create with reference object		–		
							11.1.2	Create with automatic instance naming		–		
							11.2	Delete support		x		
							11.2.1	Delete only if no contained objects		–		
							11.2.2	Delete contained objects		–		
12	linkage-cONS-Management	{2 13 0 2 6 21}	Superior class: cONS AND SUBCLASSES	o			12.1	Create support		m		
							12.1.1	Create with reference object		m		
							12.1.2	Create with automatic instance naming		–		
							12.2	Delete support		m		
							12.2.1	Delete only if no contained objects		–		
							12.2.2	Delete contained objects		–		

Copyright International Organization for Standardization
Provided by IHS under license with ISO
No reproduction or networking permitted without license from IHS
Not for Resale

Table G.1 *(continued)*

Index	Name binding template label	Value of object identifier for name binding	Constraints and values	Status	Support	Additional information	Subindex	Operation	Constraints and values	Status	Support	Additional information
13	nSAP-networkSubsystem-Automatic	{2 13 0 2 6 4}	Superior class: networkSubsystem AND SUBCLASSES	o			13.1	Create support		x		
							13.1.1	Create with reference object		–		
							13.1.2	Create with automatic instance naming		–		
							13.2	Delete support		x		
							13.2.1	Delete only if no contained objects		–		
							13.2.2	Delete contained objects		–		
14	nSAP-networkSubsystem-Management	{2 13 0 2 6 5}	Superior class: networkSubsystem AND SUBCLASSES	o			14.1	Create support		m		
							14.1.1	Create with reference object		–		
							14.1.2	Create with automatic instance naming		–		
							14.2	Delete support		m		
							14.2.1	Delete only if no contained objects		–		
							14.2.2	Delete contained objects		–		
15	"ITU-T Rec. X.723 (1993) | ISO/IEC 10165-5:1994": sap2-subsystem	{2 9 3 5 6 4}	Superior class: "ITU-T Rec. X.723 (1993) | ISO/IEC 10165-5:1994": subsystem AND SUBCLASSES	o			15.1	Create support		x		
							15.1.1	Create with reference object		–		
							15.1.2	Create with automatic instance naming		–		
							15.2	Delete support		x		
							15.2.1	Delete only if no contained objects		–		
							15.2.2	Delete contained objects		–		

Copyright International Organization for Standardization
Provided by IHS under license with ISO
No reproduction or networking permitted without license from IHS
Not for Resale

Table G.1 *(continued)*

Index	Name binding template label	Value of object identifier for name binding	Constraints and values	Status	Support	Additional information	Subindex	Operation	Constraints and values	Status	Support	Additional information
16	networkConnection-cONS	{2 13 0 2 6 19}	Superior class: cONS AND SUBCLASSES	o			16.1	Create support		x		
							16.1.1	Create with reference object		–		
							16.1.2	Create with automatic instance naming		–		
							16.2	Delete support		m		
							16.2.1	Delete only if no contained objects		–		
							16.2.2	Delete contained objects		–		
17	"ITU-T Rec. X.723 (1993) | ISO/IEC 10165-5:1994": singlePeerConnection-coProtocolMachine	{2 9 3 5 6 5}	Superior class: "ITU-T Rec. X.723 (1993) | ISO/IEC 10165-5:1994": coProtocolMachine AND SUBCLASSES	o			17.1	Create support		x		
							17.1.1	Create with reference object		–		
							17.1.2	Create with automatic instance naming		–		
							17.2	Delete support		x		
							17.2.1	Delete only if no contained objects		–		
							17.2.2	Delete contained objects		–		
18	networkEntity-networkSubsystem-Automatic	{2 13 0 2 6 27}	Superior class: networkSubsystem AND SUBCLASSES	o			18.1	Create support		x		
							18.1.1	Create with reference object		–		
							18.1.2	Create with automatic instance naming		–		
							18.2	Delete support		x		
							18.2.1	Delete only if no contained objects		–		
							18.2.2	Delete contained objects		–		

--`,,```,,,,````-`-`,,`,,`,`,,`---

Copyright International Organization for Standardization
Provided by IHS under license with ISO
No reproduction or networking permitted without license from IHS
Not for Resale

Table G.1 *(continued)*

cfsccfs cIndex	Name binding template label	Value of object identifier for name binding	Constraints and values	Status	Support	Additional information	Subindex	Operation	Constraints and values	Status	Support	Additional information
19	networkEntity-networkSubsystem-Management	{2 13 0 2 6 28}	Superior class: networkSubsystem AND SUBCLASSES	o			19.1	Create support		m		
							19.1.1	Create with reference object		–		
							19.1.2	Create with automatic instance naming		–		
							19.2	Delete support		m		
							19.2.1	Delete only if no contained objects		–		
							19.2.2	Delete contained objects		–		
20	“ITU-T Rec. X.723 (1993) | ISO/IEC 10165-5:1994”: communicationsEntity-subsystem	{2 9 3 5 6 1}	Superior class: “ITU-T Rec. X.723 (1993) | ISO/IEC 10165-5:1994”: subsystem AND SUBCLASSES	o			20.1	Create support		x		
							20.1.1	Create with reference object		–		
							20.1.2	Create with automatic instance naming		–		
							20.2	Delete support		x		
							20.2.1	Delete only if no contained objects		–		
							20.2.2	Delete contained objects		–		
21	networkSubsystem-system	{2 13 0 2 6 1}	Superior class: “CCITT Rec. X.721 (1992) | ISO/IEC 10165-2:1992”: system AND SUBCLASSES	o			21.1	Create support		x		
							21.1.1	Create with reference object		–		
							21.1.2	Create with automatic instance naming		–		
							21.2	Delete support		x		
							21.2.1	Delete only if no contained objects		–		
							21.2.2	Delete contained objects		–		

--`,,```,,,,````-`-`,,`,,`,`,,`---

Copyright International Organization for Standardization
Provided by IHS under license with ISO
No reproduction or networking permitted without license from IHS
Not for Resale

Table G.1 *(continued)*

Index	Name binding template label	Value of object identifier for name binding	Constraints and values	Status	Support	Additional information	Subindex	Operation	Constraints and values	Status	Support	Additional information
22	"ITU-T Rec. X.723 (1993) | ISO/IEC 10165-5:1994": subsystem-system	{2 9 3 5 6 6}	Superior class: "CCITT Rec. X.721 (1992) | ISO/IEC 10165-2:1992": system AND SUBCLASSES	o			22.1	Create support		x		
							22.1.1	Create with reference object		–		
							22.1.2	Create with automatic instance naming		–		
							22.2	Delete support		x		
							22.2.1	Delete only if no contained objects		–		
							22.2.2	Delete contained objects		–		
23	permanentVirtualCircuit-DCE-x25PLE-DCE	{2 13 0 2 6 29}	Superior class: x25PLE-DCE AND SUBCLASSES	o			23.1	Create support		m		
							23.1.1	Create with reference object		–		
							23.1.2	Create with automatic instance naming		m		
							23.2	Delete support		m		
							23.2.1	Delete only if no contained objects		–		
							23.2.2	Delete contained objects		–		
24	permanentVirtualCircuit-DTE-x25PLE-DTE	{2 13 0 2 6 26}	Superior class: x25PLE-DTE AND SUBCLASSES	o			24.1	Create support		m		
							24.1.1	Create with reference object		–		
							24.1.2	Create with automatic instance naming		m		
							24.2	Delete support		m		
							24.2.1	Delete only if no contained objects		–		
							24.2.2	Delete contained objects		–		

Copyright International Organization for Standardization
Provided by IHS under license with ISO
No reproduction or networking permitted without license from IHS
Not for Resale

Table G.1 *(continued)*

Index	Name binding template label	Value of object identifier for name binding	Constraints and values	Status	Support	Additional information	Subindex	Operation	Constraints and values	Status	Support	Additional information
25	virtualCall-DCE-x25PLE-DCE-Automatic	{2 13 0 2 6 30}	Superior class: x25PLE-DCE AND SUBCLASSES	o			25.1	Create support		x		
							25.1.1	Create with reference object		–		
							25.1.2	Create with automatic instance naming		–		
							25.2	Delete support		m		
							25.2.1	Delete only if no contained objects		–		
							25.2.2	Delete contained objects		–		
26	virtualCall-DCE-x25PLE-DCE-Management	{2 13 0 2 6 31}	Superior class: x25PLE-DCE AND SUBCLASSES	o			26.1	Create support		m		
							26.1.1	Create with reference object		–		
							26.1.2	Create with automatic instance naming		m		
							26.2	Delete support		m		
							26.2.1	Delete only if no contained objects		–		
							26.2.2	Delete contained objects		–		
27	virtualCall-DTE-x25PLE-DTE	{2 13 0 2 6 24}	Superior class: x25PLE-DTE AND SUBCLASSES	o			27.1	Create support		x		
							27.1.1	Create with reference object		–		
							27.1.2	Create with automatic instance naming		–		
							27.2	Delete support		x		
							27.2.1	Delete only if no contained objects		–		
							27.2.2	Delete contained objects		–		

Copyright International Organization for Standardization
Provided by IHS under license with ISO
No reproduction or networking permitted without license from IHS
Not for Resale

Table G.1 *(continued)*

Index	Name binding template label	Value of object identifier for name binding	Constraints and values	Status	Support	Additional information	Subindex	Operation	Constraints and values	Status	Support	Additional information
28	virtualCallIVMO-x25PLE	{2 13 0 2 6 25}	Superior class: x25PLE AND SUBCLASSES	o			28.1	Create support		m		
							28.1.1	Create with reference object		–		
							28.1.2	Create with automatic instance naming		–		
							28.2	Delete support		m		
							28.2.1	Delete only if no contained objects		–		
							28.2.2	Delete contained objects		–		
29	x25PLE-networkSubsystem-Automatic	{2 13 0 2 6 18}	Superior class: networkSubsystem AND SUBCLASSES	o			29.1	Create support		x		
							29.1.1	Create with reference object		–		
							29.1.2	Create with automatic instance naming		–		
							29.2	Delete support		m		
							29.2.1	Delete only if no contained objects		–		
							29.2.2	Delete contained objects		–		
30	x25PLE-networkSubsystem-Management	{2 13 0 2 6 9}	Superior class: networkSubsystem AND SUBCLASSES	o			30.1	Create support		m		
							30.1.1	Create with reference object		m		
							30.1.2	Create with automatic instance naming		–		
							30.2	Delete support		m		
							30.2.1	Delete only if no contained objects		m		
							30.2.2	Delete contained objects		x		

Copyright International Organization for Standardization
Provided by IHS under license with ISO
No reproduction or networking permitted without license from IHS
Not for Resale

Table G.1 *(concluded)*

Index	Name binding template label	Value of object identifier for name binding	Constraints and values	Status	Support	Additional information	Subindex	Operation	Constraints and values	Status	Support	Additional information
31	x25PLEIVMO-networkSubsystem	{2 13 0 2 6 10}	Superior class: networkSubsystem AND SUBCLASSES	o			31.1	Create support		m		
							31.1.1	Create with reference object		m		
							31.1.2	Create with automatic instance naming		–		
							31.2	Delete support		m		
							31.2.1	Delete only if no contained objects		–		
							31.2.2	Delete contained objects		–		

Index

A

activeESConfigTimer, 18, 21
Allocation of Object Identifiers, 63
assemblingSegmentsDiscarded, 12, 13, 14

B

bilateralCUG, 31, 37
bilateralCUGSelection, 52, 54
bilateralCUGWithOutgoingAccess, 31, 37

C

callAttempts, 28, 29, 37
callDeflectionSubscription, 27, 29, 31, 37
calledAddressExtension, 50, 54
calledLineAddressModifiedNotification, 52, 54
callEstablishmentRetryCountsExceeded, 28, 37
callingAddressExtension, 50, 54
callRedirection, 31, 37
callRedirectionDeflectionNotification, 52, 55
callRequestResponseTimer, 27, 29, 37
callsConnected, 29, 32, 38
callsFailed, 17, 18, 21
callsPlaced, 17, 18, 21
callTimeouts, 32, 37
chargingDirection, 49, 50, 55
chargingInformation, 31, 38
clearCountsExceeded, 32, 38
clearIndication, 32, 38
clearRequestResponseTimer, 28, 29, 38
clearRequestRetransmissionCount, 28, 29, 38
clearTimeouts, 32, 38
cLNS, 11, 13, 14, 20
cLNS8473-P, 12
cLNS8473PImportedCounters-B, 12, 13
cLNS8473PImportedNotifications-B, 12, 13
cLNSChecksum-P, 12
cLNSChecksum-P PACKAGE, 13
cLNS-networkEntity-Automatic, 14
cLNS-networkEntity-Management, 13
cLNS-P, 11
Common behaviour templates, 8
commonCreationDeletion-B, 9, 10, 11, 16, 24, 25, 26, 27, 47, 49
commonStateChange-B, 11, 16, 24, 26, 49
commonStateChange-B BEHAVIOUR, 8
congestionDiscards, 12, 13, 14
connectionless-mode network service managed object, 11
connection-mode network service managed object, 24
cONS, 20, 21, 24, 25
cONS-networkEntity-Automatic, 24
cONS-networkEntity-Management, 24
cONS-P, 24
cUG, 29, 38
cUGSelection, 50, 55
cUGWithIncomingAccess, 31, 38
cUGWithOutgoingAccess, 31, 39
cUGWithOutgoingAccessSelection, 52, 55

D

dataPacketRetransmissionCount, 33, 39
dataPacketsReceived, 30, 32, 39, 51
dataPacketsSent, 30, 32, 39, 51
dataRetransmissionTimerExpiries, 32, 39, 51
dBitModification, 31, 39
dCECommonVirtualCircuitCounters-P, 29, 30, 48
dCEVirtualCallFacilities-P, 50, 52
dCEX25PLEFacilities-P, 29, 31
dCEX25PLETimers-P, 29, 31
deactivateConnection-B, 25, 50
deactivateConnection-B BEHAVIOUR, 8
defaultESConfigTimer, 21
defaultPacketSizes, 26, 27, 39
defaultThroughputClasses, 26, 27, 39
defaultThroughputClassesAssignment, 31, 39
defaultWindowSizes, 26, 27, 40
direction, 50, 56
dSeriesCounts, 51, 54
dSeriesCounts-P, 51
dSeriesCounts-virtualCall-DCE-Automatic, 54
dSeriesCounts-virtualCall-DCE-Management, 54
dSeriesId, 51, 54, 55
dSeriesResetRequestIndicationPackets, 51, 55
dSeriesSegmentsReceived, 51, 55
dSeriesSegmentsSent, 51, 55
dTEVirtualCircuitCounters-P, 48, 51
dTEX25PLECounters-P, 28, 32
defaultESConfigTimer, 18

E

Elements of network layer management information, 5
enableChecksum, 13, 14, 18
errorReportsReceived, 12, 13, 14
eSReachabilityChanges, 19, 21
Examples of the use of Relationship attributes, 83
extendedPacketSequenceNumbering, 27, 29, 31, 40

F

fastSelect, 49, 50, 56
fastSelectAcceptance, 29, 40
flowControlParameterNegotiation, 26, 27, 40

H

holdingTimerMultiplier, 18, 21
huntGroup, 31, 40

Copyright International Organization for Standardization
Provided by IHS under license with ISO
No reproduction or networking permitted without license from IHS
Not for Resale

I

idleTimer, 17, 21
incomingCall, 32, 41
incomingCallBarredWithinCUG, 31, 41
incomingCallsBarred, 29, 41
initialMinimumTimer, 17, 22
interruptPacketsReceived, 30, 41, 51
interruptPacketsSent, 30, 41, 51
interruptResponseTimer, 28, 29, 41
interruptTimerExpiries, 30, 41, 51
invalid9542PDUs, 18, 19, 22
iSConfigurationTimer, 19, 22
ISO9542OperationalSubsets, 18, 22
iSReachabilityChanges, 18, 22

L

Layer n+1 clients, 7
Layer n–1 services, 7
Linkage, 7, 16, 20, 21
linkage managed object, 16
linkage-cLNS-Automatic, 20
linkage-cLNS-Management, 20
linkageCODLService-P, 17
linkage-cONS-Automatic, 21
linkage-cONS-Management, 20
linkageId, 16, 20, 21, 22
linkageIdleTimer-P, 16, 17
linkageInitialMinimumTimer-P, 16, 17
linkage-ISO9542Checksum-P, 16, 18
linkage-ISO9542ES-P, 16, 18
linkage-ISO9542ESReachabilityChange-B, 18, 19
linkage-ISO9542ImportedAlarmNotifications-B, 18, 20
linkage-ISO9542IS-P, 16, 18
linkage-ISO9542ISReachabilityChange-B, 18, 19
linkage-ITU-T Rec. X.233 | ISO/IEC 8473-1-ISO/IEC8208 or ITU-T Rec. X.25SNDCF-P, 18
linkage-ITU-T Rec. X.233 | ISO/IEC 8473-1-ISO8208SNDCF-P, 17
linkage-P, 16
linkageReserveTimer-P, 16, 19
localChargingPrevention, 31, 41
localDTEAddress, 26, 27, 41
localNSAPMO, 25
logicalChannel, 47, 56
logicalChannelAssignments, 26, 27, 42
logicalChannelIV-B, 48, 49, 52

M

Managed object hierarchy, 5
manualISSNPAAddress, 18, 22
maxActiveCircuits, 27, 29, 42
maximumLifetime, 12, 14
minimumRecallTimer, 27, 29, 42

N

nAddressesIV-B, 11
Name Bindings, 9
network connection managed object, 25
network entity managed object, 9
network subsystem managed object, 9
networkConnection, 25
networkConnection-P, 25
networkEntity, 9, 10, 14, 24
networkEntity-networkSubsystem-Automatic NAME BINDING, 10
networkEntity-networkSubsystem-Management NAME BINDING, 10
networkEntity-P, 9
networkEntityTitles, 9
networkEntityTitles ATTRIBUTE, 10
networkSubsystem, 9, 10, 11, 36
networkSubsystem MANAGED OBJECT CLASS, 9
networkSubsystem-P, 9
nonStandardDefaultPacketSizes, 31, 42
nonStandardDefaultWindowSizes, 31, 42
notificationData, 28, 47
notificationPDUHeader, 13, 16
nSAP, 10, 11
NSAP managed object, 10
nSAP-networkSubsystem-Automatic, 11
nSAP-networkSubsystem-Management, 11
nSAP-P, 10
nUIOverride, 31, 42
nUISelection, 52, 56
nUISubscription, 31, 43

O

Object identifier definitions, 58
octetsSentReceivedCounter-B, 30, 32, 51
octetsSentReceivedCounter-B BEHAVIOUR, 8
oneWayLogicalChannelIncoming, 31, 43
oneWayLogicalChannelOutgoing, 29, 43
onlineFacilityRegistration, 31, 43
onlineRegistration-P, 28, 30, 33
operationalProtocolIV-B, 16, 20
operationalProtocols, 16, 22
operationalSystemType, 12, 15, 24
operationalSystemTypeIV-B, 12
operationalSystemTypeIV-B, 13, 24
optionalCMIPIV-B, 48, 49, 52
originallyCalledAddress, 50, 56
outgoingCallBarredWithinCUG, 31, 43
outgoingCallsBarred, 29, 43

P

packetRetransmission, 31, 43
packetRetransmissionProcedures-P, 28, 30, 32
packetSizes, 47, 49, 56
pDUDiscards, 12, 13, 15
permanent virtual circuit DCE managed object, 48
permanent virtual circuit DTE managed object, 48
permanentVirtualCircuit-DCE, 48, 52
permanentVirtualCircuit-DCE-P, 48
permanentVirtualCircuit-DCE-x25PLE-DCE, 52
permanentVirtualCircuit-DTE, 48, 52
permanentVirtualCircuit-DTE-P, 48
permanentVirtualCircuit-DTE-x25PLE-DTE, 52
protocolErrorsAccusedOf, 28, 44
protocolErrorsDetectedLocally, 28, 44

Copyright International Organization for Standardization
Provided by IHS under license with ISO
No reproduction or networking permitted without license from IHS
Not for Resale

protocolVersionSupported, 26, 44
providerInitiatedDisconnects, 30, 31, 32, 44
providerInitiatedResets, 30, 31, 32, 44, 51

R

reachabilityChange, 18, 19, 23
receivingWindowRotationRecoveryProcedures-P, 28, 30, 33
Recommendation D Series counts managed object, 50
redirectHoldingTime, 19, 23
redirectReason, 50, 57
registrationPermitted, 33, 44
registrationRequestResponseTimer, 33, 44
registrationRequestRetransmissionCount, 33, 44
rejectResponseTimer, 32, 45
rejectRetransmissionCount, 32, 45
remoteDTEAddress, 49, 50, 57
remoteLogicalChannel, 49, 57
remotelyInitiatedResets, 30, 31, 32, 45, 51
remotelyInitiatedRestarts, 30, 31, 32, 45
remoteNSAPAddress, 25
reserveTimer, 19, 23
resetIndication, 32, 45
resetRequestResponseTimer, 27, 29, 45
resetRequestRetransmissionCount, 28, 30, 45
resetTimeouts, 30, 31, 32, 45, 51
resettingTimer-B, 21, 22, 23
resettingTimer-B BEHAVIOUR, 9
restartCountsExceeded, 32, 45
restartIndication, 32, 45
restartRequestResponseTimer, 28, 30, 46
restartRequestRetransmissionCount, 28, 30, 46
reverseCharging, 49, 50, 52, 57
reverseChargingAcceptance, 31, 46
rPOASelection, 52, 57
rPOASubscription, 31, 44

S

segmentsDiscarded, 12, 15
segmentsReceived, 12, 15
segmentsSent, 12, 15
Shorthand description of Managed Objects, 69
sN-SAP, 16, 23, 26
sN-ServiceProvider, 16, 23, 26, 27
sN-ServiceProviderIV-B, 16, 20, 21
successfulConnectionEstablishment-B, 25, 50
successfulConnectionEstablishment-B BEHAVIOUR, 8
suggestedESConfigurationTimer, 19, 23
supportedProtocols, 12, 15
systemTypes, 10
systemTypes GET, 9

T

The X.25 PLE DCE initial values managed object, 30
throughputClasses, 47, 49, 57
throughputClassNegotiation, 26, 27, 46
transitDelaySelectionAndIndication, 50, 57
transmittingWindowRotationRecoveryProcedures-P, 28, 30, 33

V

virtual call DCE managed object, 50
virtual call DTE managed object, 49
virtual call initial values managed object, 49
virtual circuit and related managed objects, 47
virtual circuit DCE managed object, 48
virtual circuit DTE managed object, 47
virtual managed object, 47
virtualCall-DCE, 50, 53, 54
virtualCall-DCE-P, 50
virtualCall-DCE-x25PLE-DCE-Automatic, 53
virtualCall-DCE-x25PLE-DCE-Management, 53
virtualCall-DTE, 50, 53
virtualCall-DTE-P, 50
virtualCall-DTE-x25PLE-DTE, 53
virtualCallIVMO, 49, 54
virtualCallIVMOId, 49, 54, 58
virtualCallIVMO-P, 49
virtualCallIVMO-x25PLE, 54
virtualCircuit, 47, 48
virtualCircuit-DCE, 48, 50
virtualCircuit-DTE, 48, 50
virtualCircuitId, 47, 52, 53, 58
virtualCircuitNaming-B, 47, 52
virtualCircuit-P, 47

W

windowRotationTimer, 33, 46
windowSizes, 47, 49, 58
windowStatusTransmissionTimer, 33, 46

X

X.25 PLE and related managed objects, 26
X.25 PLE DCE managed object, 28
X.25 PLE DTE initial values managed object, 29
X.25 PLE initial values managed object, 26
X.25 PLE managed object, 26
X25 PLE DTE managed object, 27
x25PLE, 26, 27, 29, 36, 54
x25PLE-DCE, 29, 52, 53
x25PLE-DCE-P, 29
x25PLE-DTE, 27, 52, 53
x25PLE-DTE-P, 27
x25PLEId, 26, 36, 46
x25PLEIVMO, 27, 29, 30, 36
x25PLEIVMO-DCE, 30
x25PLEIVMO-DTE, 29
x25PLEIVMO-DTE-P, 29
x25PLEIVMOId, 27, 36, 47
x25PLEIVMO-networkSubsystem, 36
x25PLEIVMO-P, 27
x25PLEMode, 26, 27, 46
x25PLE-networkSubsystem-Automatic, 36
x25PLE-networkSubsystem-Management, 36
x25PLE-P, 26
x25PLEPImportedNotifications-B, 27, 33
x25SegmentsReceived, 30, 31, 47
x25SegmentsSent, 30, 31, 47

--`,,```,,,,````-`-`,,`,,`,`,,`---

Copyright International Organization for Standardization
Provided by IHS under license with ISO
No reproduction or networking permitted without license from IHS
Not for Resale

© ISO/IEC

ICS 35.100.30

Price based on 279 pages

Copyright International Organization for Standardization
Provided by IHS under license with ISO
No reproduction or networking permitted without license from IHS

Not for Resale