INTERNATIONAL STANDARD

ISO/IEC 10373-6

First edition
2001-05-15

AMENDMENT 5
2007-10-15

Identification cards — Test methods —

Part 6:
Proximity cards

AMENDMENT 5: Bit rates of *fc*/64, *fc*/32 and *fc*/16

Cartes d'identification — Méthodes d'essai —

Partie 6: Cartes de proximité

AMENDEMENT 5: Débits binaires de fc*/64,* fc*/32 et* fc*/16*

Reference number
ISO/IEC 10373-6:2001/Amd.5:2007(E)

© ISO/IEC 2007

--`,,```,,,,````-`-`,,`,,`,`,,`---
Copyright International Organization for Standardization
Provided by IHS under license with ISO
No reproduction or networking permitted without license from IHS

Not for Resale

PDF disclaimer

This PDF file may contain embedded typefaces. In accordance with Adobe's licensing policy, this file may be printed or viewed but shall not be edited unless the typefaces which are embedded are licensed to and installed on the computer performing the editing. In downloading this file, parties accept therein the responsibility of not infringing Adobe's licensing policy. The ISO Central Secretariat accepts no liability in this area.

Adobe is a trademark of Adobe Systems Incorporated.

Details of the software products used to create this PDF file can be found in the General Info relative to the file; the PDF-creation parameters were optimized for printing. Every care has been taken to ensure that the file is suitable for use by ISO member bodies. In the unlikely event that a problem relating to it is found, please inform the Central Secretariat at the address given below.



COPYRIGHT PROTECTED DOCUMENT

© ISO/IEC 2007

All rights reserved. Unless otherwise specified, no part of this publication may be reproduced or utilized in any form or by any means, electronic or mechanical, including photocopying and microfilm, without permission in writing from either ISO at the address below or ISO's member body in the country of the requester.

ISO copyright office
Case postale 56 • CH-1211 Geneva 20
Tel. + 41 22 749 01 11
Fax + 41 22 749 09 47
E-mail copyright@iso.org
Web www.iso.org

Published in Switzerland

Copyright International Organization for Standardization
Provided by IHS under license with ISO
No reproduction or networking permitted without license from IHS

© ISO/IEC 2007 – All rights reserved

Not for Resale

Foreword

ISO (the International Organization for Standardization) and IEC (the International Electrotechnical Commission) form the specialized system for worldwide standardization. National bodies that are members of ISO or IEC participate in the development of International Standards through technical committees established by the respective organization to deal with particular fields of technical activity. ISO and IEC technical committees collaborate in fields of mutual interest. Other international organizations, governmental and non-governmental, in liaison with ISO and IEC, also take part in the work. In the field of information technology, ISO and IEC have established a joint technical committee, ISO/IEC JTC 1.

International Standards are drafted in accordance with the rules given in the ISO/IEC Directives, Part 2.

The main task of the joint technical committee is to prepare International Standards. Draft International Standards adopted by the joint technical committee are circulated to national bodies for voting. Publication as an International Standard requires approval by at least 75 % of the national bodies casting a vote.

Attention is drawn to the possibility that some of the elements of this document may be the subject of patent rights. ISO and IEC shall not be held responsible for identifying any or all such patent rights.

Amendment 5 to ISO/IEC 10373-6:2001 was prepared by Joint Technical Committee ISO/IEC JTC 1, *Information technology*, Subcommittee SC 17, *Cards and personal identification.*

© ISO/IEC 2007 – All rights reserved

Copyright International Organization for Standardization
Provided by IHS under license with ISO
No reproduction or networking permitted without license from IHS
Not for Resale

Copyright International Organization for Standardization
Provided by IHS under license with ISO
No reproduction or networking permitted without license from IHS
Not for Resale

Identification cards — Test methods —

Part 6:
Proximity cards

AMENDMENT 5: Bit rates of *fc*/64, *fc*/32 and *fc*/16

Page 2, 7.1.1 of ISO/IEC 10373-6:2001/Amd.2:2003

Add the following note at the end of the subclause:

"NOTE No load modulation test is required for bit rates of *fc*/64, *fc*/32 and *fc*/16."

Page 4, 7.2.2 of ISO/IEC 10373-6:2001/Amd.2:2003

Replace the existing text with the following:

"Tables 1 to 4 define additional test conditions to be applied for type A PICCs for different bit rates.

NOTE The definitions for timing parameters related to the amplitude are different between *fc*/128 and higher bit rates, see the future Amendment 2 to ISO/IEC 14443-2:2001."

Page 4, 7.2.2 of ISO/IEC 10373-6:2001/Amd.2:2003

Replace the title of Table 1 with the following: "**Table 1 – Additional test conditions for a bit rate of *fc*/128**"

Page 4, 7.2.2 of ISO/IEC 10373-6:2001/Amd.2:2003

Insert the following table and note after Table 1:

Table 2 — Additional test conditions for a bit rate of *fc*/64

Condition	*H* (A/m)	t1	t2	t3	a
1	1,5	20/*fc*	14/*fc*	6/*fc*	0,2
2	1,5	20/*fc*	16/*fc*	7/*fc*	≤ 0,05
3	4,5	20/*fc*	14/*fc*	6/*fc*	0,2
4	4,5	20/*fc*	16/*fc*	7/*fc*	≤ 0,05
5	7,5	20/*fc*	14/*fc*	6/*fc*	0,2
6	7,5	20/*fc*	16/*fc*	7/*fc*	≤ 0,05

NOTE The timing t3 for all higher bit rates is defined in 8.1.2.2.

Page 4, 7.2.2 of ISO/IEC 10373-6:2001/Amd.2:2003

Insert the following table after the new Table 2:

© ISO/IEC 2007 – All rights reserved

Copyright International Organization for Standardization
Provided by IHS under license with ISO
No reproduction or networking permitted without license from IHS
Not for Resale

Table 3 — Additional test conditions for a bit rate of *fc*/32

Condition	*H* (A/m)	t1	t2	t3	a
1	1,5	10/*fc*	6/*fc*	6/*fc*	0,35
2	1,5	10/*fc*	7/*fc*	7/*fc*	≤ 0,15
3	4,5	10/*fc*	6/*fc*	6/*fc*	0,35
4	4,5	10/*fc*	7/*fc*	7/*fc*	≤ 0,15
5	7,5	10/*fc*	6/*fc*	6/*fc*	0,35
6	7,5	10/*fc*	7/*fc*	7/*fc*	≤ 0,15

Page 4, 7.2.2 of ISO/IEC 10373-6:2001/Amd.2:2003

Insert the following table after Table 3:

Table 4 — Additional test conditions for a bit rate of *fc*/16

Condition	*H* (A/m)	t1	t2	t3	a
1	1,5	5/*fc*	3/*fc*	6/*fc*	0,6
2	1,5	5/*fc*	3/*fc*	7/*fc*	≤ 0,3
3	4,5	5/*fc*	3/*fc*	6/*fc*	0,6
4	4,5	5/*fc*	3/*fc*	7/*fc*	≤ 0,3
5	7,5	5/*fc*	3/*fc*	6/*fc*	0,6
6	7,5	5/*fc*	3/*fc*	7/*fc*	≤ 0,3

Page 4, 7.2.2.1 of ISO/IEC 10373-6:2001/Amd.2:2003

Replace the existing text with the following:

"Under the conditions defined in Table 1 the PICC shall answer to a REQA with ATQA.

A PICC supporting the optional *fc*/64 bit rate shall operate under the conditions defined in Table 2 after selection of a bit rate of *fc*/64. This PICC shall respond correctly to an I-block transmitted at a bit rate of *fc*/64.

A PICC supporting the optional *fc*/32 bit rate shall operate under the conditions defined in Table 3 after selection of a bit rate of *fc*/32. The PICC shall respond correctly to an I-block transmitted at a bit rate of *fc*/32.

A PICC supporting the optional *fc*/16 bit rate shall operate under the conditions defined in Table 4 after selection of a bit rate of *fc*/16. The PICC shall respond correctly to an I-block transmitted at a bit rate of *fc*/16."

Page 4, 7.2.2.2 of ISO/IEC 10373-6:2001/Amd.2:2003

Replace the existing text with the following:

"The test report shall confirm the intended operation at the mandatory *fc*/128 bit rate under the conditions defined in Table 1. For PICCs supporting one or more of the optional high bit rates the test report shall confirm the intended operation at the supported bit rates under the conditions defined in 7.2.2.1."

© ISO/IEC 2007 – All rights reserved
Copyright International Organization for Standardization
Provided by IHS under license with ISO
No reproduction or networking permitted without license from IHS
Not for Resale

Page 4, 7.2.3 of ISO/IEC 10373-6:2001/Amd.2:2003

Replace the existing text with the following:

"Tables 5 to 7 define additional test conditions to be applied for type B PICCs for different bit rates.

Page 4, 7.2.3 of ISO/IEC 10373-6:2001/Amd.2:2003

Replace the title of Table 2 (renumbered to Table 5) with the following: "**Table 5 – Additional test condition for bit rates of *fc*/128 and *fc*/64**"

Page 4, 7.2.3 of ISO/IEC 10373-6:2001/Amd.2:2003

Insert the following table after Table 5:

Table 6 — Additional test conditions for a bit rate of *fc*/32

Condition	***H*** (A/m)	**m *(%)***	t_r, t_f (µs)
1	1,5	8	1
2	1,5	14	1
3	4,5	8	1
4	4,5	14	1
5	7,5	8	1
6	7,5	14	1

Page 4, 7.2.3 of ISO/IEC 10373-6:2001/Amd.2:2003

Insert the following table after Table 6:

Table 7 — Additional test conditions for a bit rate of *fc*/16

Condition	***H*** (A/m)	**m** (%)	t_r, t_f (µs)
1	1,5	8	0,8
2	1,5	14	0,8
3	4,5	8	0,8
4	4,5	14	0,8
5	7,5	8	0,8
6	7,5	14	0,8

Page 5, 7.2.3.1 of ISO/IEC 10373-6:2001/Amd.2:2003

Replace the existing text with the following:

"Under the conditions defined in Table 5 the PICC operating at a bit rate of *fc*/128 shall answer to a REQB with ATQB.

© ISO/IEC 2007 – All rights reserved
Copyright International Organization for Standardization
Provided by IHS under license with ISO
No reproduction or networking permitted without license from IHS
Not for Resale

A PICC supporting the optional *fc*/64 bit rate shall operate under the conditions defined in Table 5 after selection of a bit rate of *fc*/64. This PICC shall respond correctly to an I-block transmitted at a bit rate of *fc*/64.

A PICC supporting the optional *fc*/32 bit rate shall operate under the conditions defined in Table 6 after selection of a bit rate of *fc*/32. The PICC shall respond correctly to an I-block transmitted at a bit rate of *fc*/32.

A PICC supporting the optional *fc*/16 bit rate shall operate under the conditions defined in Table 7 after selection of a bit rate of *fc*/16. The PICC shall respond correctly to an I-block transmitted at a bit rate of *fc*/16."

Page 5, 7.2.3.2 of ISO/IEC 10373-6:2001/Amd.2:2003

Replace the existing text with the following:

"The test report shall confirm the intended operation at the mandatory *fc*/128 bit rate under the conditions defined in Table 5. For PICCs supporting one or more of the optional high bit rates the test report shall confirm the intended operation at the supported bit rates under the conditions defined in 7.2.3.1."

Page 14, A.2

Insert new A.2.1 after the notes and before Figure A.3 with the following title and move the existing Figure A.3 into new A.2.1:

"**A.2.1 Impedance matching network for a bit rate of *fc*/128**"

Change the title of Figure A.3 to "**Figure A.3 – Impedance matching network for a bit rate of *fc*/128**"

Page 14, A.2

Insert new A.2.2 after new A.2.1 with the title "**A.2.2 Impedance matching network for bit rates of *fc*/64, *fc*/32 and *fc*/16**" and insert the following figure into new A.2.2:

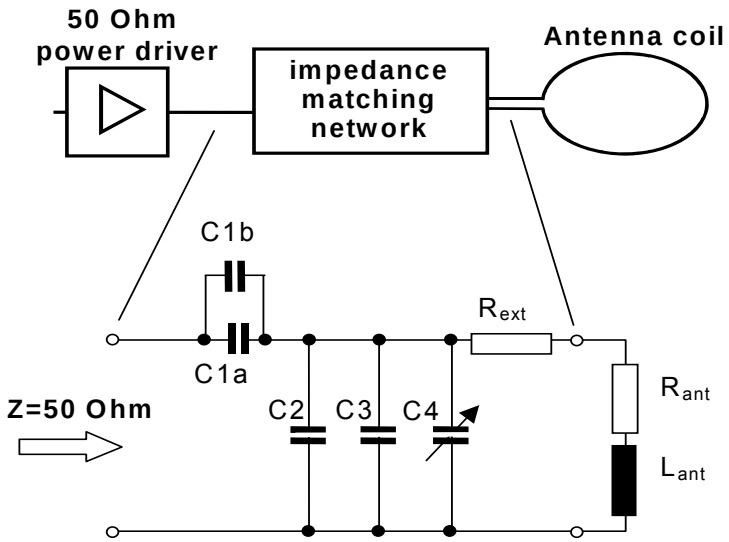

Component Table:

	Value	Unit	Remarks
C1a	56	pF	Voltage range 200V
C1b	5,6	pF	Voltage range 200V
C2	180	pF	Voltage range 200V
C3	15	pF	Voltage range 200V
C4	2-27	pF	Voltage range 200V
Rext	2	Ohm	Power range 8 W

NOTE This impedance matching network is designed for tests up to 7,5 A/m.

Figure A.4 — Impedance matching network for bit rates of *fc*/64, *fc*/32 and *fc*/16

© ISO/IEC 2007 – All rights reserved
Copyright International Organization for Standardization
Provided by IHS under license with ISO
No reproduction or networking permitted without license from IHS
Not for Resale

Last page

Add the following new Annex J:

Annex J
(normative)

High bit rate selection test methods for PCD

J.1 Apparatus

In this test the PCD-test-apparatus shall be configurable to change the bit rate during the test procedure. Tester shall be able to measure the bit rate used by the PCD on each stage of this test procedure.

J.2 Procedure

Place the PCD-test-apparatus into the field of the PCD.

J.2.1 Procedure for Type A

The following procedure shall be repeated for all values of interface byte TA(1) defined in Table J.1:

a) Run through activation sequence as defined in ISO/IEC 14443-3.

b) The PCD shall send a RATS command as defined in ISO/IEC 14443-4.

c) The PCD-test-apparatus answers with a valid ATS including TA(1) according to Table J.1.

d) The PCD may optionally send a PPS with a valid parameter setting for PPS1 byte according to Table J.1.

e) If the PCD has sent a PPS then the PCD-test-apparatus acknowledges the received PPS with a valid PPS response.

f) The PCD shall send $I(0)_0$ block using the bit rate selected.

NOTE This block may also be $I(1)_0$, or R(NACK) in case of PICC presence check method 2a.

g) The PCD-test-apparatus sends a valid response using the bit rate selected. Check, if the answer from the PCD-test apparatus is accepted by the PCD.

Table J.1 — Correct behaviour of PCD after ATS with TA(1)

TA(1)	Valid parameter setting for PPS1
(10000000)b	(00000000)b [a]
(10010001)b	(00000101)b, (00000000)b
(10100010)b	(00001010)b, (00000000)b
(10110011)b	(00000101)b, (00001010)b, (00000000)b
(11000100)b	(00001111)b, (00000000)b
(11010101)b	(00000101)b, (00001111)b, (00000000)b
(11100110)b	(00001010)b, (00001111)b, (00000000)b

© ISO/IEC 2007 – All rights reserved
Copyright International Organization for Standardization
Provided by IHS under license with ISO
No reproduction or networking permitted without license from IHS
Not for Resale

TA(1)	Valid parameter setting for PPS1
(11110111)b	(00000101)b, (00001010)b, (00001111)b, (00000000)b
(00000000)b	(00000000)b [a]
(00000001)b	(00000001)b, (00000000)b
(00000010)b	(00000010)b, (00000000)b
(00000011)b	(00000001)b, (00000010)b, (00000000)b
(00000100)b	(00000011)b, (00000000)b
(00000101)b	(00000001)b, (00000011)b, (00000000)b
(00000110)b	(00000010)b, (00000011)b, (00000000)b
(00000111)b	(00000001)b, (00000010)b, (00000011)b, (00000000)b
(00010000)b	(00000000)b (00000100)b
(00010001)b	(00000001)b, (00000000)b (00000101)b, (00000100)b
(00010010)b	(00000010)b, (00000000)b (00000110)b, (00000100)b
(00010011)b	(00000001)b, (00000010)b, (00000000)b (00000101)b, (00000110)b, (00000100)b
(00010100)b	(00000011)b, (00000000)b (00000111)b, (00000100)b
(00010101)b	(00000001)b, (00000011)b, (00000000)b (00000101)b, (00000111)b, (00000100)b
(00010110)b	(00000010)b, (00000011)b, (00000000)b (00000110)b, (00000111)b, (00000100)b
(00010111)b	(00000001)b, (00000010)b, (00000011)b, (00000000)b (00000101)b, (00000110)b, (00000111)b, (00000100)b
(00100000)b	(00000000)b (00001000)b
(00100001)b	(00000001)b, (00000000)b (00001001)b, (00001000)b
(00100010)b	(00000010)b, (00000000)b (00001010)b, (00001000)b
(00100011)b	(00000001)b, (00000010)b, (00000000)b (00001001)b, (00001010)b, (00001000)b
(00100100)b	(00000011)b, (00000000)b (00001011)b, (00001000)b
(00100101)b	(00000001)b, (00000011)b, (00000000)b (00001001)b, (00001011)b, (00001000)b
(00100110)b	(00000010)b, (00000011)b, (00000000)b (00001010)b, (00001011)b, (00001000)b
(00100111)b	(00000001)b, (00000010)b, (00000011)b, (00000000)b (00001001)b, (00001010)b, (00001011)b, (00001000)b
(00110000)b	(00000000)b (00000100)b (00001000)b
(00110001)b	(00000001)b, (00000000)b (00000101)b, (00000100)b (00001001)b, (00001000)b

Copyright International Organization for Standardization
Provided by IHS under license with ISO
No reproduction or networking permitted without license from IHS
Not for Resale
© ISO/IEC 2007 – All rights reserved

TA(1)	Valid parameter setting for PPS1
(00110010)b	(00000010)b, (00000000)b (00000110)b, (00000100)b (00001010)b, (00001000)b
(00110011)b	(00000001)b, (00000010)b, (00000000)b (00000101)b, (00000110)b, (00000100)b (00001001)b, (00001010)b, (00001000)b
(00110100)b	(00000011)b, (00000000)b (00000111)b, (00000100)b (00001011)b, (00001000)b
(00110101)b	(00000001)b, (00000011)b, (00000000)b (00000101)b, (00000111)b, (00000100)b (00001001)b, (00001011)b, (00001000)b
(00110110)b	(00000010)b, (00000011)b, (00000000)b (00000110)b, (00000111)b, (00000100)b (00001010)b, (00001011)b, (00001000)b
(00110111)b	(00000001)b, (00000010)b, (00000011)b, (00000000)b (00000101)b, (00000110)b, (00000111)b, (00000100)b (00001001)b, (00001010)b, (00001011)b, (00001000)b
(01000000)b	(00000000)b (00001100)b
(01000001)b	(00000001)b, (00000000)b (00001101)b, (00001100)b
(01000010)b	(00000010)b, (00000000)b (00001110)b, (00001100)b
(01000011)b	(00000001)b, (00000010)b, (00000000)b (00001101)b, (00001110)b, (00001100)b
(01000100)b	(00000011)b, (00000000)b (00001111)b, (00001100)b
(01000101)b	(00000001)b, (00000011)b, (00000000)b (00001101)b, (00001111)b, (00001100)b
(01000110)b	(00000010)b, (00000011)b, (00000000)b (00001110)b, (00001111)b, (00001100)b
(01000111)b	(00000001)b, (00000010)b, (00000011)b, (00000000)b (00001101)b, (00001110)b, (00001111)b, (00001100)b
(01010000)b	(00000000)b (00000100)b (00001100)b
(01010001)b	(00000001)b, (00000000)b (00000101)b, (00000100)b (00001101)b, (00001100)b
(01010010)b	(00000010)b, (00000000)b (00000110)b, (00000100)b (00001110)b, (00001100)b
(01010011)b	(00000001)b, (00000010)b, (00000000)b (00000101)b, (00000110)b, (00000100)b (00001101)b, (00001110)b, (00001100)b
(01010100)b	(00000011)b, (00000000)b (00000111)b, (00000100)b (00001111)b, (00001100)b

© ISO/IEC 2007 All rights reserved
Copyright International Organization for Standardization
Provided by IHS under license with ISO
No reproduction or networking permitted without license from IHS
Not for Resale

TA(1)	Valid parameter setting for PPS1
(01010101)b	(00000001)b, (00000011)b, (00000000)b (00000101)b, (00000111)b, (00000100)b (00001101)b, (00001111)b, (00001100)b
(01010110)b	(00000010)b, (00000011)b, (00000000)b (00000110)b, (00000111)b, (00000100)b (00001110)b, (00001111)b, (00001100)b
(01010111)b	(00000001)b, (00000010)b, (00000011)b, (00000000)b (00000101)b, (00000110)b, (00000111)b, (00000100)b (00001101)b, (00001110)b, (00001111)b, (00001100)b
(01100000)b	(00000000)b (00001000)b (00001100)b
(01100001)b	(00000001)b, (00000000)b (00001001)b, (00001000)b (00001101)b, (00001100)b
(01100010)b	(00000010)b, (00000000)b (00001010)b, (00001000)b (00001110)b, (00001100)b
(01100011)b	(00000001)b, (00000010)b, (00000000)b (00001001)b, (00001010)b, (00001000)b (00001101)b, (00001110)b, (00001100)b
(01100100)b	(00000011)b, (00000000)b (00001011)b, (00001000)b (00001111)b, (00001100)b
(01100101)b	(00000001)b, (00000011)b, (00000000)b (00001001)b, (00001011)b, (00001000)b (00001101)b, (00001111)b, (00001100)b
(01100110)b	(00000010)b, (00000011)b, (00000000)b (00001010)b, (00001011)b, (00001000)b (00001110)b, (00001111)b, (00001100)b
(01100111)b	(00000001)b, (00000010)b, (00000011)b, (00000000)b (00001001)b, (00001010)b, (00001011)b, (00001000)b (00001101)b, (00001110)b, (00001111)b, (00001100)b
(01110000)b	(00000000)b (00000100)b (00001000)b (00001100)b
(01110001)b	(00000001)b, (00000000)b (00000101)b, (00000100)b (00001001)b, (00001000)b (00001101)b, (00001100)b
(01110010)b	(00000010)b, (00000000)b (00000110)b, (00000100)b (00001010)b, (00001000)b (00001110)b, (00001100)b
(01110011)b	(00000001)b, (00000010)b, (00000000)b (00000101)b, (00000110)b, (00000100)b (00001001)b, (00001010)b, (00001000)b (00001101)b, (00001110)b, (00001100)b
(01110100)b	(00000011)b, (00000000)b (00000111)b, (00000100)b (00001011)b, (00001000)b (00001111)b, (00001100)b

Copyright International Organization for Standardization
Provided by IHS under license with ISO
No reproduction or networking permitted without license from IHS
Not for Resale
© ISO/IEC 2007 – All rights reserved

TA(1)	Valid parameter setting for PPS1
(01110101)b	(00000001)b, (00000011)b, (00000000)b (00000101)b, (00000111)b, (00000100)b (00001001)b, (00001011)b, (00001000)b (00001101)b, (00001111)b, (00001100)b
(01110110)b	(00000010)b, (00000011)b, (00000000)b (00000110)b, (00000111)b, (00000100)b (00001010)b, (00001011)b, (00001000)b (00001110)b, (00001111)b, (00001100)b
(01110111)b	(00000001)b, (00000010)b, (00000011)b, (00000000)b (00000101)b, (00000110)b, (00000111)b, (00000100)b (00001001)b, (00001010)b, (00001011)b, (00001000)b (00001101)b, (00001110)b, (00001111)b, (00001100)b
[a] PPS command is useless in this case and may not be supported by the PICC.	

Scenario J.1 — High bit rate selection, type A, Procedure 1

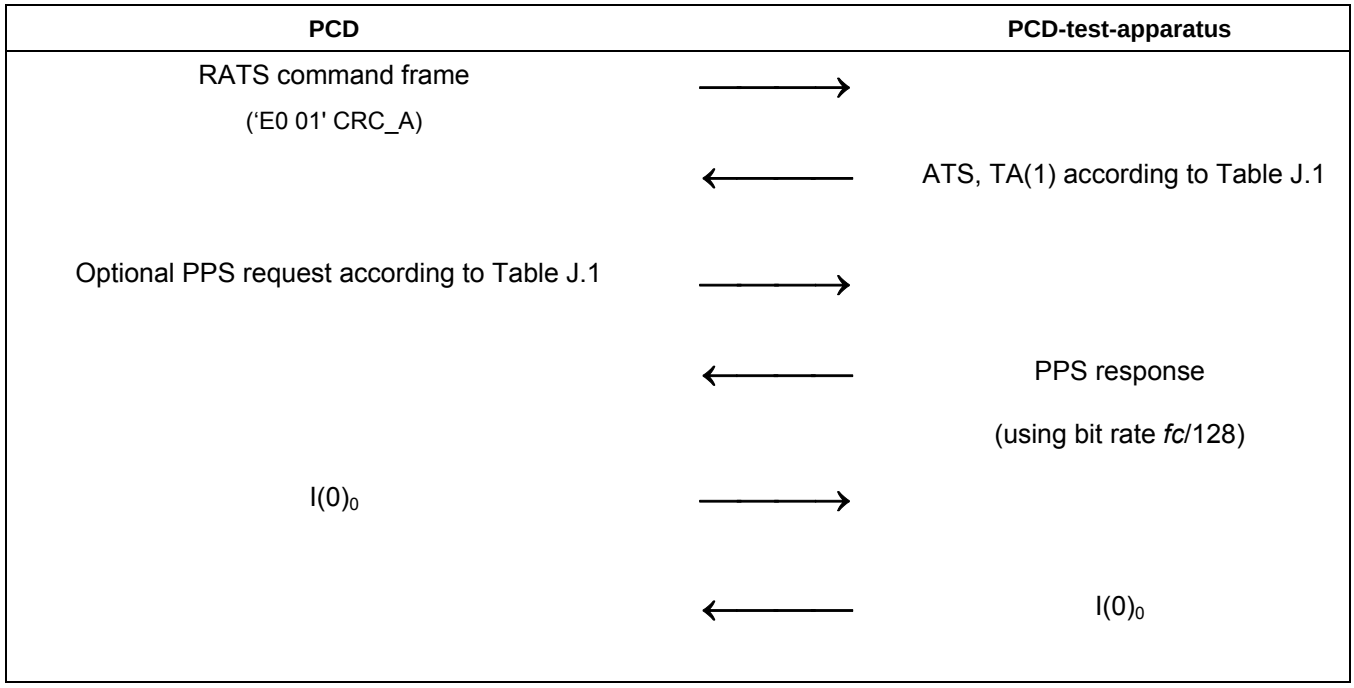

J.2.1.1 Expected result

The PCD shall behave as described in Scenario J.1 in each of the 72 test cases.

J.2.1.2 Test report

If the PCD behaves valid according to Scenario J.1 in each of the 72 test cases, then this test passed. The test report should document the bit rates chosen by the PCD in each of the 72 test cases.

J.2.2 Procedure for type B

The following procedure shall be repeated for all values of the protocol info byte Bit_Rate_capability defined in Table J.2:

© ISO/IEC 2007 – All rights reserved
Copyright International Organization for Standardization
Provided by IHS under license with ISO
No reproduction or networking permitted without license from IHS
Not for Resale

a) The PCD shall send a valid REQB Command frame.

b) The PCD-test-apparatus answers with a valid ATQB including Bit_Rate_capability byte according to Table J.2.

c) The PCD shall send an ATTRIB command with a valid parameter setting for Param2 byte according to Table J.2.

d) The PCD-test-apparatus acknowledges the received ATTRIB with a valid Answer to ATTRIB Command.

e) PCD shall send $I(0)_0$ block using the bit rate selected with Param2.

NOTE This block may also be $I(1)_0$, or R(NACK) in case of PICC presence check method 2a.

f) The PCD-test-apparatus sends a valid response using the bit rate selected with Param2. Check, if the answer from the PCD-test apparatus is accepted by the PCD.

Table J.2 — Correct behaviour of PCD after ATQB

Bit_Rate_capability	Valid parameter setting for Param2 [a]
(10000000)b	(0000xxxx)b
(10010001)b	(0101xxxx)b, (0000xxxx)b
(10100010)b	(1010xxxx)b, (0000xxxx)b
(10110011)b	(0101xxxx)b, (1010xxxx)b, (0000xxxx)b
(11000100)b	(1111xxxx)b, (0000xxxx)b
(11010101)b	(0101xxxx)b, (1111xxxx)b, (0000xxxx)b
(11100110)b	(1010xxxx)b, (1111xxxx)b, (0000xxxx)b
(11110111)b	(0101xxxx)b, (1010xxxx)b, (1111xxxx)b, (0000xxxx)b
(00000000)b	(0000xxxx)b
(00000001)b	(0001xxxx)b, (0000xxxx)b
(00000010)b	(0010xxxx)b, (0000xxxx)b
(00000011)b	(0001xxxx)b, (0010xxxx)b, (0000xxxx)b
(00000100)b	(0011xxxx)b, (0000xxxx)b
(00000101)b	(0001xxxx)b, (0011xxxx)b, (0000xxxx)b
(00000110)b	(0010xxxx)b, (0011xxxx)b, (0000xxxx)b
(00000111)b	(0001xxxx)b, (0010xxxx)b, (0011xxxx)b, (0000xxxx)b
(00010000)b	(0000xxxx)b (0100xxxx)b
(00010001)b	(0001xxxx)b, (0000xxxx)b (0101xxxx)b, (0100xxxx)b
(00010010)b	(0010xxxx)b, (0000xxxx)b (0110xxxx)b, (0100xxxx)b
(00010011)b	(0001xxxx)b, (0010xxxx)b, (0000xxxx)b (0101xxxx)b, (0110xxxx)b, (0100xxxx)b
(00010100)b	(0011xxxx)b, (0000xxxx)b (0111xxxx)b, (0100xxxx)b
(00010101)b	(0001xxxx)b, (0011xxxx)b, (0000xxxx)b (0101xxxx)b, (0111xxxx)b, (0100xxxx)b

© ISO/IEC 2007 – All rights reserved
Copyright International Organization for Standardization
Provided by IHS under license with ISO
No reproduction or networking permitted without license from IHS
Not for Resale

Bit_Rate_capability	Valid parameter setting for Param2 [a]
(00010110)b	(0010xxxx)b, (0011xxxx)b, (0000xxxx)b (0110xxxx)b, (0111xxxx)b, (0100xxxx)b
(00010111)b	(0001xxxx)b, (0010xxxx)b, (0011xxxx)b, (0000xxxx)b (0101xxxx)b, (0110xxxx)b, (0111xxxx)b, (0100xxxx)b
(00100000)b	(0000xxxx)b (1000xxxx)b
(00100001)b	(0001xxxx)b, (0000xxxx)b (1001xxxx)b, (1000xxxx)b
(00100010)b	(0010xxxx)b, (0000xxxx)b (1010xxxx)b, (1000xxxx)b
(00100011)b	(0001xxxx)b, (0010xxxx)b, (0000xxxx)b (1001xxxx)b, (1010xxxx)b, (1000xxxx)b
(00100100)b	(0011xxxx)b, (0000xxxx)b (1011xxxx)b, (1000xxxx)b
(00100101)b	(0001xxxx)b, (0011xxxx)b, (0000xxxx)b (1001xxxx)b, (1011xxxx)b, (1000xxxx)b
(00100110)b	(0010xxxx)b, (0011xxxx)b, (0000xxxx)b (1010xxxx)b, (1011xxxx)b, (1000xxxx)b
(00100111)b	(0001xxxx)b, (0010xxxx)b, (0011xxxx)b, (0000xxxx)b (1001xxxx)b, (1010xxxx)b, (1011xxxx)b, (1000xxxx)b
(00110000)b	(0000xxxx)b (0100xxxx)b (1000xxxx)b
(00110001)b	(0001xxxx)b, (0000xxxx)b (0101xxxx)b, (0100xxxx)b (1001xxxx)b, (1000xxxx)b
(00110010)b	(0010xxxx)b, (0000xxxx)b (0110xxxx)b, (0100xxxx)b (1010xxxx)b, (1000xxxx)b
(00110011)b	(0001xxxx)b, (0010xxxx)b, (0000xxxx)b (0101xxxx)b, (0110xxxx)b, (0100xxxx)b (1001xxxx)b, (1010xxxx)b, (1000xxxx)b
(00110100)b	(0011xxxx)b, (0000xxxx)b (0111xxxx)b, (0100xxxx)b (1011xxxx)b, (1000xxxx)b
(00110101)b	(0001xxxx)b, (0011xxxx)b, (0000xxxx)b (0101xxxx)b, (0111xxxx)b, (0100xxxx)b (1001xxxx)b, (1011xxxx)b, (1000xxxx)b
(00110110)b	(0010xxxx)b, (0011xxxx)b, (0000xxxx)b (0110xxxx)b, (0111xxxx)b, (0100xxxx)b (1010xxxx)b, (1011xxxx)b, (1000xxxx)b
(00110111)b	(0001xxxx)b, (0010xxxx)b, (0011xxxx)b, (0000xxxx)b (0101xxxx)b, (0110xxxx)b, (0111xxxx)b, (0100xxxx)b (1001xxxx)b, (1010xxxx)b, (1011xxxx)b, (1000xxxx)b
(01000000)b	(0000xxxx)b (1100xxxx)b
(01000001)b	(0001xxxx)b, (0000xxxx)b (1101xxxx)b, (1100xxxx)b
(01000010)b	(0010xxxx)b, (0000xxxx)b (1110xxxx)b, (1100xxxx)b

© ISO/IEC 2007 – All rights reserved
Copyright International Organization for Standardization
Provided by IHS under license with ISO
No reproduction or networking permitted without license from IHS
Not for Resale

Bit_Rate_capability	Valid parameter setting for Param2 [a]
(01000011)b	(0001xxxx)b, (0010xxxx)b, (0000xxxx)b (1101xxxx)b, (1110xxxx)b, (1100xxxx)b
(01000100)b	(0011xxxx)b, (0000xxxx)b (1111xxxx)b, (1100xxxx)b
(01000101)b	(0001xxxx)b, (0011xxxx)b, (0000xxxx)b (1101xxxx)b, (1111xxxx)b, (1100xxxx)b
(01000110)b	(0010xxxx)b, (0011xxxx)b, (0000xxxx)b (1110xxxx)b, (1111xxxx)b, (1100xxxx)b
(01000111)b	(0001xxxx)b, (0010xxxx)b, (0011xxxx)b, (0000xxxx)b (1101xxxx)b, (1110xxxx)b, (1111xxxx)b, (1100xxxx)b
(01010000)b	(0000xxxx)b (0100xxxx)b (1100xxxx)b
(01010001)b	(0001xxxx)b, (0000xxxx)b (0101xxxx)b, (0100xxxx)b (1101xxxx)b, (1100xxxx)b
(01010010)b	(0010xxxx)b, (0000xxxx)b (0110xxxx)b, (0100xxxx)b (1110xxxx)b, (1100xxxx)b
(01010011)b	(0001xxxx)b, (0010xxxx)b, (0000xxxx)b (0101xxxx)b, (0110xxxx)b, (0100xxxx)b (1101xxxx)b, (1110xxxx)b, (1100xxxx)b
(01010100)b	(0011xxxx)b, (0000xxxx)b (0111xxxx)b, (0100xxxx)b (1111xxxx)b, (1100xxxx)b
(01010101)b	(0001xxxx)b, (0011xxxx)b, (0000xxxx)b (0101xxxx)b, (0111xxxx)b, (0100xxxx)b (1101xxxx)b, (1111xxxx)b, (1100xxxx)b
(01010110)b	(0010xxxx)b, (0011xxxx)b, (0000xxxx)b (0110xxxx)b, (0111xxxx)b, (0100xxxx)b (1110xxxx)b, (1111xxxx)b, (1100xxxx)b
(01010111)b	(0001xxxx)b, (0010xxxx)b, (0011xxxx)b, (0000xxxx)b (0101xxxx)b, (0110xxxx)b, (0111xxxx)b, (0100xxxx)b (1101xxxx)b, (1110xxxx)b, (1111xxxx)b, (1100xxxx)b
(01100000)b	(0000xxxx)b (1000xxxx)b (1100xxxx)b
(01100001)b	(0001xxxx)b, (0000xxxx)b (1001xxxx)b, (1000xxxx)b (1101xxxx)b, (1100xxxx)b
(01100010)b	(0010xxxx)b, (0000xxxx)b (1010xxxx)b, (1000xxxx)b (1110xxxx)b, (1100xxxx)b
(01100011)b	(0001xxxx)b, (0010xxxx)b, (0000xxxx)b (1001xxxx)b, (1010xxxx)b, (1000xxxx)b (1101xxxx)b, (1110xxxx)b, (1100xxxx)b
(01100100)b	(0011xxxx)b, (0000xxxx)b (1011xxxx)b, (1000xxxx)b (1111xxxx)b, (1100xxxx)b
(01100101)b	(0001xxxx)b, (0011xxxx)b, (0000xxxx)b (1001xxxx)b, (1011xxxx)b, (1000xxxx)b (1101xxxx)b, (1111xxxx)b, (1100xxxx)b

Copyright International Organization for Standardization
Provided by IHS under license with ISO
No reproduction or networking permitted without license from IHS
Not for Resale
© ISO/IEC 2007 – All rights reserved

Bit_Rate_capability	Valid parameter setting for Param2 [a]
(01100110)b	(0010xxxx)b, (0011xxxx)b, (0000xxxx)b (1010xxxx)b, (1011xxxx)b, (1000xxxx)b (1110xxxx)b, (1111xxxx)b, (1100xxxx)b
(01100111)b	(0001xxxx)b, (0010xxxx)b, (0011xxxx)b, (0000xxxx)b (1001xxxx)b, (1010xxxx)b, (1011xxxx)b, (1000xxxx)b (1101xxxx)b, (1110xxxx)b, (1111xxxx)b, (1100xxxx)b
(01110000)b	(0000xxxx)b (0100xxxx)b (1000xxxx)b (1100xxxx)b
(01110001)b	(0001xxxx)b, (0000xxxx)b (0101xxxx)b, (0100xxxx)b (1001xxxx)b, (1000xxxx)b (1101xxxx)b, (1100xxxx)b
(01110010)b	(0010xxxx)b, (0000xxxx)b (0110xxxx)b, (0100xxxx)b (1010xxxx)b, (1000xxxx)b (1110xxxx)b, (1100xxxx)b
(01110011)b	(0001xxxx)b, (0010xxxx)b, (0000xxxx)b (0101xxxx)b, (0110xxxx)b, (0100xxxx)b (1001xxxx)b, (1010xxxx)b, (1000xxxx)b (1101xxxx)b, (1110xxxx)b, (1100xxxx)b
(01110100)b	(0011xxxx)b, (0000xxxx)b (0111xxxx)b, (0100xxxx)b (1011xxxx)b, (1000xxxx)b (1111xxxx)b, (1100xxxx)b
(01110101)b	(0001xxxx)b, (0011xxxx)b, (0000xxxx)b (0101xxxx)b, (0111xxxx)b, (0100xxxx)b (1001xxxx)b, (1011xxxx)b, (1000xxxx)b (1101xxxx)b, (1111xxxx)b, (1100xxxx)b
(01110110)b	(0010xxxx)b, (0011xxxx)b, (0000xxxx)b (0110xxxx)b, (0111xxxx)b, (0100xxxx)b (1010xxxx)b, (1011xxxx)b, (1000xxxx)b (1110xxxx)b, (1111xxxx)b, (1100xxxx)b
(01110111)b	(0001xxxx)b, (0010xxxx)b, (0011xxxx)b, (0000xxxx)b (0101xxxx)b, (0110xxxx)b, (0111xxxx)b, (0100xxxx)b (1001xxxx)b, (1010xxxx)b, (1011xxxx)b, (1000xxxx)b (1101xxxx)b, (1110xxxx)b, (1111xxxx)b, (1100xxxx)b

[a] The least significant half byte of Param2 is used to code the maximum frame size that can be received by the PCD.

© ISO/IEC 2007 – All rights reserved
Copyright International Organization for Standardization
Provided by IHS under license with ISO
No reproduction or networking permitted without license from IHS
Not for Resale

Scenario J.2 — High bit rate selection, type B, Procedure 2

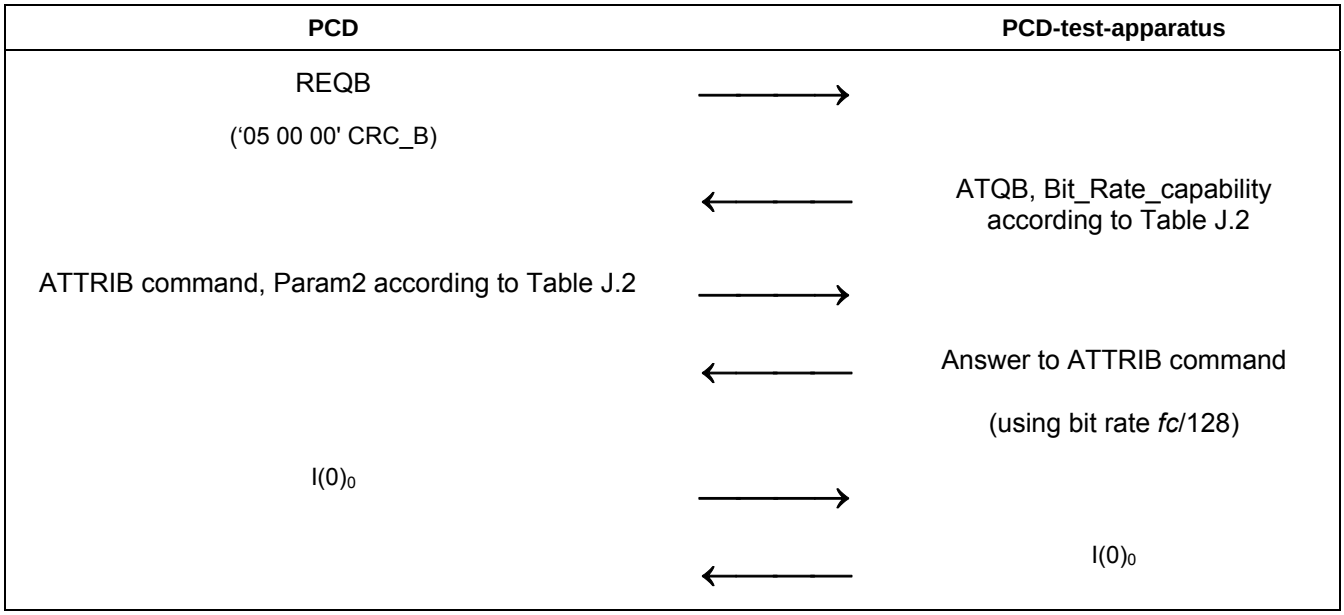

J.2.2.1 Expected result

The PCD shall behave as described in Scenario J.2 in each of the 72 test cases.

J.2.2.2 Test report

If the PCD behaves valid according to Scenario J.2 in each of the 72 test cases, then this test passed. The test report should document the bit rates chosen by the PCD in each of the 72 test cases.

--`,,```,,,,````-`-`,,`,,`,`,,`---

© ISO/IEC 2007 – All rights reserved
Copyright International Organization for Standardization
Provided by IHS under license with ISO
No reproduction or networking permitted without license from IHS
Not for Resale

--`,,```,,,,````-`-`,,`,,`,`,,`---

Copyright International Organization for Standardization
Provided by IHS under license with ISO
No reproduction or networking permitted without license from IHS

Not for Resale

ICS 35.240.15

Price based on 14 pages

© ISO/IEC 2007 – All rights reserved
Copyright International Organization for Standardization
Provided by IHS under license with ISO
No reproduction or networking permitted without license from IHS
Not for Resale