INTERNATIONAL STANDARD

ISO/IEC 10373-6

First edition
2001-05-15

AMENDMENT 4
2006-06-01

Identification cards — Test methods —

Part 6: **Proximity cards**

AMENDMENT 4: Additional test methods for PCD RF interface and PICC alternating field exposure

Cartes d'identification — Méthodes d'essai —

Partie 6: Cartes de proximité

AMENDEMENT 4: Méthodes d'essai additionnelles pour l'interface RF des PCD et l'exposition des PICC au champ alternatif

Reference number
ISO/IEC 10373-6:2001/Amd.4:2006(E)

© ISO/IEC 2006

Copyright International Organization for Standardization
Provided by IHS under license with ISO
No reproduction or networking permitted without license from IHS

Not for Resale

PDF disclaimer

This PDF file may contain embedded typefaces. In accordance with Adobe's licensing policy, this file may be printed or viewed but shall not be edited unless the typefaces which are embedded are licensed to and installed on the computer performing the editing. In downloading this file, parties accept therein the responsibility of not infringing Adobe's licensing policy. The ISO Central Secretariat accepts no liability in this area.

Adobe is a trademark of Adobe Systems Incorporated.

Details of the software products used to create this PDF file can be found in the General Info relative to the file; the PDF-creation parameters were optimized for printing. Every care has been taken to ensure that the file is suitable for use by ISO member bodies. In the unlikely event that a problem relating to it is found, please inform the Central Secretariat at the address given below.

© ISO/IEC 2006

All rights reserved. Unless otherwise specified, no part of this publication may be reproduced or utilized in any form or by any means, electronic or mechanical, including photocopying and microfilm, without permission in writing from either ISO at the address below or ISO's member body in the country of the requester.

ISO copyright office
Case postale 56 • CH-1211 Geneva 20
Tel. + 41 22 749 01 11
Fax + 41 22 749 09 47
E-mail copyright@iso.org
Web www.iso.org

Published in Switzerland

Copyright International Organization for Standardization
Provided by IHS under license with ISO
No reproduction or networking permitted without license from IHS

© ISO/IEC 2006 – All rights reserved

Not for Resale

Foreword

ISO (the International Organization for Standardization) and IEC (the International Electrotechnical Commission) form the specialized system for worldwide standardization. National bodies that are members of ISO or IEC participate in the development of International Standards through technical committees established by the respective organization to deal with particular fields of technical activity. ISO and IEC technical committees collaborate in fields of mutual interest. Other international organizations, governmental and non-governmental, in liaison with ISO and IEC, also take part in the work. In the field of information technology, ISO and IEC have established a joint technical committee, ISO/IEC JTC 1.

International Standards are drafted in accordance with the rules given in the ISO/IEC Directives, Part 2.

The main task of the joint technical committee is to prepare International Standards. Draft International Standards adopted by the joint technical committee are circulated to national bodies for voting. Publication as an International Standard requires approval by at least 75 % of the national bodies casting a vote.

Attention is drawn to the possibility that some of the elements of this document may be the subject of patent rights. ISO and IEC shall not be held responsible for identifying any or all such patent rights.

Amendment 4 to ISO/IEC 10373-6:2001 was prepared by Joint Technical Committee ISO/IEC JTC 1, *Information technology*, Subcommittee SC 17, *Cards and personal identification*.

© ISO/IEC 2006 – All rights reserved

Copyright International Organization for Standardization
Provided by IHS under license with ISO
No reproduction or networking permitted without license from IHS
Not for Resale

--`,,```,,,,````-`-`,,`,,`,`,,`---

Copyright International Organization for Standardization
Provided by IHS under license with ISO
No reproduction or networking permitted without license from IHS

Not for Resale

Identification cards — Test methods —

Part 6:
Proximity cards

AMENDMENT 4: Additional test methods for PCD RF interface and PICC alternating field exposure

Page 2, 3.1.2

Replace the term, definition and associated footnote with the following:

"Class 1 PICC
PICC whose antenna is located within a zone defined by two rectangles:

— external rectangle: 81 mm × 49 mm;

— internal rectangle: 64 mm × 34 mm, centred in the external rectangle, with 3 mm radius, except for its connection endings.

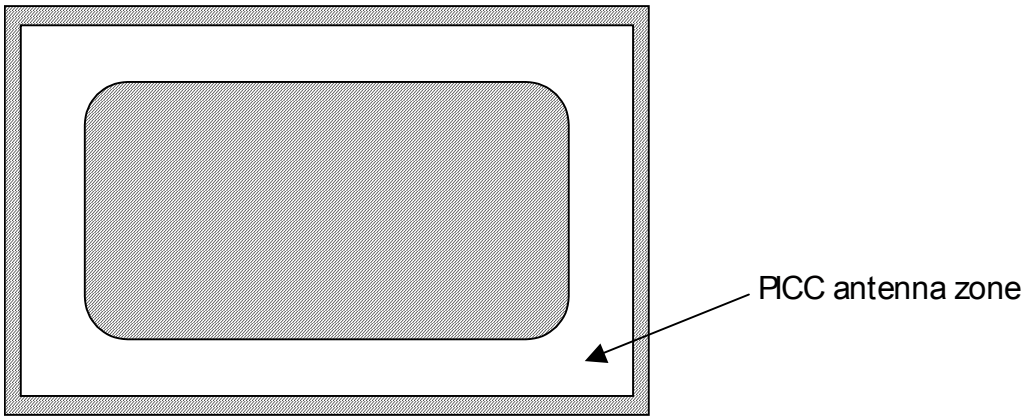

WARNING — The "Class 1" PICC shall also pass the "Class 1" PICC maximum loading effect test defined in 7.4."

© ISO/IEC 2006 – All rights reserved

Copyright International Organization for Standardization
Provided by IHS under license with ISO
No reproduction or networking permitted without license from IHS
Not for Resale

Pages 3 and 4, Clause 5

Replace Clause 5 and subclauses 5.1, 5.2 and 5.3 with the following:

5 Physical characteristics tests

5.1 Alternating magnetic field test

The purpose of this test is to check the behaviour of the PICC in relation to alternating magnetic field exposure. Alternating magnetic field shall be tested only at 13,56 MHz. No test is required at other frequencies.

5.1.1 Apparatus

The test PCD assembly shall be used to produce the alternating magnetic field.

5.1.2 Test procedure

The procedure is as follows.

a) Adjust the RF power delivered by the signal generator to the test PCD antenna to a field strength of 10 A/m rms as measured by the calibration coil.

b) Place the PICC under test in the DUT position and readjust immediately the RF drive into the test PCD antenna to the required field strength if necessary.

c) After 5 min, remove the PICC from the DUT position for at least 5 s.

d) Adjust the RF power delivered by the signal generator to the test PCD antenna to a field strength of 12 A/m rms as measured by the calibration coil.

e) Place the PICC under test in the DUT position and readjust immediately the RF drive into the test PCD antenna to the required field strength if necessary.

f) Apply for 5 min an ASK 100 % modulation to this field with the following duty cycle:

   — 5 s at 0 A/m rms;

   — 25 s at 12 A/m rms.

g) Check that the PICC operates as intended.

5.1.3 Test report

The test report shall state whether or not the PICC operates as intended.

5.2 Alternating electric field test

No test is required.

5.3 Static electricity test

The purpose of this test is to check the behaviour of the card IC in relation to electrostatic discharge (ESD) exposure in the test sample. The PICC under test is exposed to a simulated electrostatic discharge (ESD, human body model) and its basic operation checked following the exposure.

--`,,```,,,,````-`-`,,`,,`,`,,`---
© ISO/IEC 2006 – All rights reserved
Copyright International Organization for Standardization
Provided by IHS under license with ISO
No reproduction or networking permitted without license from IHS
Not for Resale

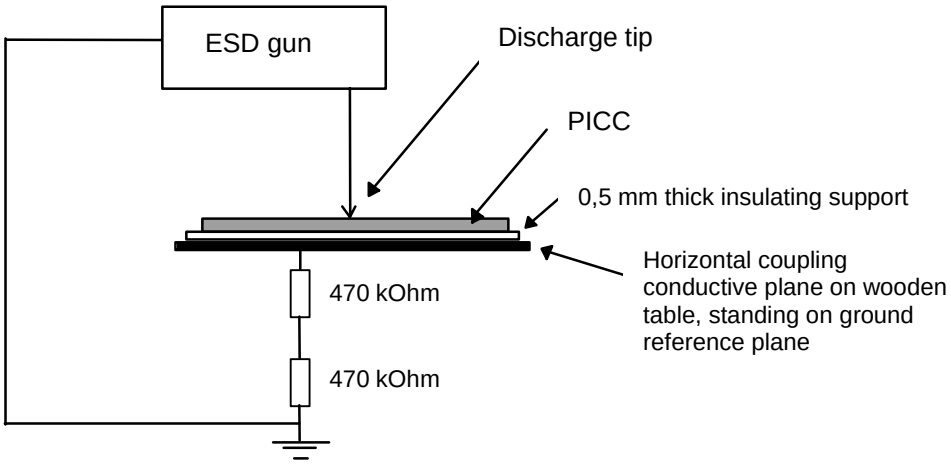

Figure 1 — ESD test circuit

5.3.1 Apparatus

Refer to IEC 61000-4-2:1995.

a) Main specifications of the ESD generator:

- energy storage capacitance: 150 pF ± 10 %;
- discharge resistance: 330 Ω ± 10 %;
- charging resistance: between 50 MΩ and 100 MΩ;
- rise time: 0,7 ns to 1 ns.

b) Selected specifications from the optional items:

- type of equipment: table top equipment;
- discharge method: direct application of air discharge to the equipment under test;
- discharge electrodes of the ESD generator: round tip probe of 8 mm diameter.

5.3.2 Test procedure

Connect the ground pin of the apparatus to the conductive plate upon which the PICC is placed.

Apply the discharge successively in normal polarity to each of the 20 test zones shown in Figure 2. Then repeat the same procedure with reversed polarity. Allow a cool-down period between successive pulses of at least 10 s.

WARNING — If the PICC includes contacts, the contacts should face up and the zone which includes contacts should not be exposed to this discharge.

Check that the PICC operates as intended at the end of the test.

© ISO/IEC 2006 – All rights reserved

Copyright International Organization for Standardization
Provided by IHS under license with ISO
No reproduction or networking permitted without license from IHS
Not for Resale

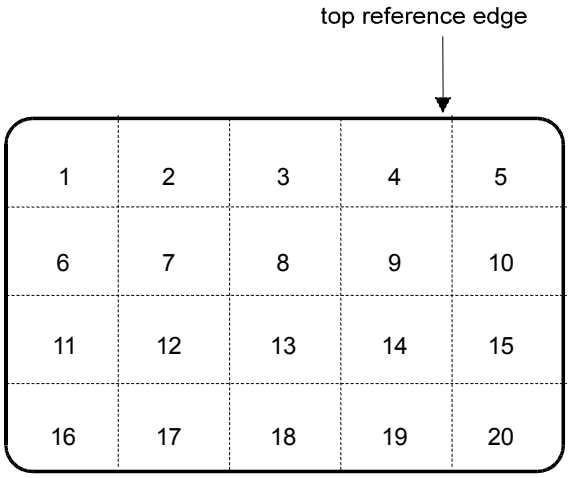

Figure 2 — Test zones on PICC for ESD test

5.3.3 Test report

The test report shall state whether or not the PICC operates as intended.

5.4 Static magnetic field test

No test is required.

Page 7, 6.3

Add a new subclause after 6.3.1 and renumber all subsequent subclauses:

"6.3.2 Reference PICC for modulation index and waveform test

The schematic of this Reference PICC is shown in Annex I. This Reference PICC includes a pick up coil with low coupling with the main coil. The pick up coil shall be connected to a high impedance oscilloscope probe. The main coil shall be calibrated with the following procedure.

a) Calibrate the Test PCD assembly to produce the H_{max} operating condition on the calibration coil.

b) Tune the Reference PICC (Annex I) to 19 MHz:

   1) set jumper J1 to position a;

   2) drive the calibration coil directly from a signal generator set at 19 MHz;

   3) locate the calibration coil and the Reference PICC as close as possible with the axes of the two coils (calibration coil and Reference PICC main coil) being congruent;

   4) adjust the Reference PICC capacitor C2 to maximum d.c. voltage at C4;

   5) assure final reading of about 6 V (d.c.) at C4 of the Reference PICC by adjusting the generator drive level;

   6) re-adjust the Reference PICC capacitor C2 to maximum d.c. voltage at C4, if necessary.

© ISO/IEC 2006 – All rights reserved
Copyright International Organization for Standardization
Provided by IHS under license with ISO
No reproduction or networking permitted without license from IHS
Not for Resale

c) Place the Reference PICC into the DUT position on the Test PCD assembly. Set jumper J1 to position b and adjust R2 to obtain 6 V (d.c.) at C4 measured with a high impedance voltmeter. Verify the operating field condition by monitoring the voltage on the calibration coil.

WARNING — R2 value should be between 140 Ω and 180 Ω.

NOTE 1 The high impedance voltmeter wires should be twisted.

NOTE 2 The high impedance oscilloscope probe ground connection should be as short as possible, less than 20 mm or coaxial connection."

Page 3 of ISO/IEC 10373-6:2001/Amd.2:2003, 7.1.2

Add a warning before step 2:

"WARNING — The PICC load modulation amplitude test should be done by increasing the field strength from 0 A/m, thus checking correct PICC operation starting from H_{min}."

Page 5 of ISO/IEC 10373-6:2001/Amd.2:2003, 7.3.1

Add a warning at the end of the subclause:

"WARNING — The resonance frequency may depend on the field strength used during the measurement."

Page 5 of ISO/IEC 10373-6:2001/Amd.2:2003, Clause 7

Add a new subclause 7.4:

"7.4 "Class 1" PICC maximum loading effect

7.4.1 Purpose

The following additional PICC test is necessary for interoperability between PCDs and "Class 1" PICCs.

NOTE This test improves interoperability only if the "Class 1" PICCs' antenna size and location are similar to the Reference PICC (Annex D) antenna size and location. For PICCs with different antenna size and/or location other classes may be created with, for each class, a corresponding reference PICC. Next revision of ISO/IEC 14443-1 will include the class(es) definition.

7.4.2 Test procedure

The PICC loading effect at H_{min} shall be measured using the test PCD assembly. It shall not exceed the loading effect of the reference PICC (Annex D) tuned to 13,56 MHz and calibrated to obtain 6 V (d.c.) at H_{min}. The procedure of this substitution method is as follows.

a) Calibrate the Test PCD assembly to produce the H_{min} operating condition on the calibration coil.

b) Tune the Reference PICC (Annex D) to 13,56 MHz:

   1) set jumper J1 to position a;

   2) drive the calibration coil directly from a signal generator set at 13,56 MHz;

   3) locate the calibration coil and the Reference PICC as close as possible with the axes of the two coils being congruent;

© ISO/IEC 2006 – All rights reserved

Copyright International Organization for Standardization
Provided by IHS under license with ISO
No reproduction or networking permitted without license from IHS
Not for Resale

4) adjust the Reference PICC capacitor C2 to maximum d.c. voltage at R1;

5) assure final reading of about 6 V (d.c.) at R1 of the Reference PICC by adjusting the generator drive level;

6) re-adjust the Reference PICC capacitor C2 to maximum d.c. voltage at R1, if necessary.

c) Place the Reference PICC into the DUT position on the Test PCD assembly. Switch the jumper to R2 and adjust R2 to obtain 6 V (d.c.) across it measured with a high impedance voltmeter. Verify the operating field condition by monitoring the voltage on the calibration coil and readjust H_{min} if necessary.

WARNING — R2 value should be between 900 Ω and 1000 Ω.

NOTE The high impedance voltmeter wires should be twisted.

d) Remove the Reference PICC then measure the field strength H_R monitored by the calibration coil.

e) Place the PICC under test into the DUT position on the Test PCD assembly and readjust H_{min} if necessary.

f) Remove the PICC under test then measure the field strength H_P monitored by the calibration coil.

The field strength H_P shall be less than the field strength H_R.

7.4.3 Test report

The test report shall give the values H_R and H_P."

Page 9, 8.1.2

Add a warning after step 3 of procedure for H_{max} test:

"WARNING — R2 value should be between 75 Ω and 85 Ω."

Page 10, 8.1.2

Add a warning after step 3 of procedure for H_{min} test:

"WARNING — R2 value should be between 400 Ω and 550 Ω."

Page 10, 8.1.3

Replace the paragraph with the following:

"The test report shall give the d.c. voltage measured across R2 adjusted for H_{min} and H_{max} field strength under the conditions applied."

© ISO/IEC 2006 – All rights reserved
Copyright International Organization for Standardization
Provided by IHS under license with ISO
No reproduction or networking permitted without license from IHS
Not for Resale

Page 10, 8.3.2

Add the following paragraph and note after the note added by ISO/IEC 10373-6:2001/Amd.2:2003:

"Repeat the test with the Reference PICC for modulation index and waveform test (Annex I) located at various locations in the operating volume. Determine the worst case deviations of the modulation index and waveform characteristics.

NOTE The load does not represent the worst case loading effect of a PICC. Higher loading effects may be achieved with higher values of R2 and/or resonance frequency closer to carrier frequency."

Page 11, 8.4.2

Replace the paragraph with the following:

"Annex E describes a Reference PICC and calibration procedure which allows the sensitivity of a PCD to load modulation to be assessed. This Reference PICC does not emulate the shunt action of all types of PICC, therefore it shall be calibrated at a given field strength *H* in the Test PCD assembly. It shall be used in the PCD field at a position where the field has the same value of *H*. The measurement of C3 (d.c.) voltage shall be exactly the same for both Reference PICC calibration and PCD load modulation test. The test procedure is as follows.

a) Place the Reference PICC at a particular position in the PCD operating volume.

b) Adjust the Reference PICC components to produce the minimum load modulation detected by the PCD (ATQ sent in response to every REQ).

NOTE The change in load modulation level may be performed by changing by steps the values of the resistors (Rmod1, Rmod2) or capacitors (Cmod1, Cmod2) for coarse modifications, and trimming of the resistor R6 for fine adjustment.

c) Measure the voltage (d.c.) at C3.

d) Place the Reference PICC in the DUT position on the Test PCD assembly.

e) Adjust the Test PCD assembly to produce a field strength *H* which gives the same voltage (d.c.) at C3 and note the corresponding field strength by reading the calibration coil voltage.

f) Measure the Reference PICC load modulation as described in 7.1 and compare it with the standard limit associated with the noted field strength. This measured load modulation level defines the PCD sensitivity criterion in order to compare with the standard limit to perform these test measurements.

WARNING — The value of R6 and D5 should not be too low to avoid a strong clamping of the voltage at C3.

This procedure shall be repeated in various positions in the operating volume. Any position in which the PCD sensitivity is above the standard limit shall be considered out of the operating volume.

NOTE 1 The test coverage may be expanded by using different resonance frequencies such as 12 MHz, 13,56 MHz and 15 MHz.

NOTE 2 The PCD sensitivity should be below the standard limit to ensure good reception of the PICC load modulation.

NOTE 3 This test does not check that the PCD reception is independent of the phase of the PICC load modulation. Consequently, it cannot guarantee the correct reception of any PICC compliant with ISO/IEC 14443-2."

--`,,```,,,,````-`-`,,`,,`,`,,`---

© ISO/IEC 2006 – All rights reserved

Copyright International Organization for Standardization
Provided by IHS under license with ISO
No reproduction or networking permitted without license from IHS
Not for Resale

Page 11, Clause 8

Add a new subclause after 8.4.2:

"8.5 Field strength of PCDs supporting operation with "Class 1" PICCs

8.5.1 Purpose

The following additional PCD test is necessary for interoperability between PCDs and "Class 1" PICCs. This test is similar to PCD field strength test specified in 8.1 but uses a Reference PICC with higher loading effect.

NOTE The loading effect of "Class 1" PICCs is lower than the loading effect of the Reference PICC used in this test (see "Class 1" PICC maximum loading effect test in 7.4). This guarantees that H_{min} is supplied in the "Class 1" PCD operating volume if additionally the "Class 1" PICCs' antenna size and location are similar to the Reference PICC (Annex D) antenna size and location. For PICCs with different antenna size and/or location other classes may be created with, for each class, a corresponding reference PICC. Next revision of ISO/IEC 14443-1 will include the class(es) definition.

8.5.2 Test procedure

The PCD field strength test defined in 8.1.2, Procedure for H_{min} test, shall be repeated with the Reference PICC (Annex D) calibrated to obtain 6 V (d.c.) across R2 instead of 3 V (d.c.).

NOTE The Reference PICC calibration used in this test is the same as the calibration defined in 7.4.2 c).

8.5.3 Test report

The test report shall give the d.c. voltage measured across R2 adjusted for H_{min} field strength under the conditions applied.

NOTE The volume in which the d.c. voltage exceeds 6 V (d.c.) defines the “Class 1” operating volume."

Page 7 of ISO/IEC 10373-6:2001/Amd.2:2003, A.2

Add a note after NOTE 1:

"NOTE 2 The power and voltage ranges include a safety margin."

© ISO/IEC 2006 – All rights reserved
Copyright International Organization for Standardization
Provided by IHS under license with ISO
No reproduction or networking permitted without license from IHS
Not for Resale

At the end of the document

Add the following annex after Annex H:

Annex I
(normative)

Reference PICC for modulation index and waveform test

I.1 Antenna layout

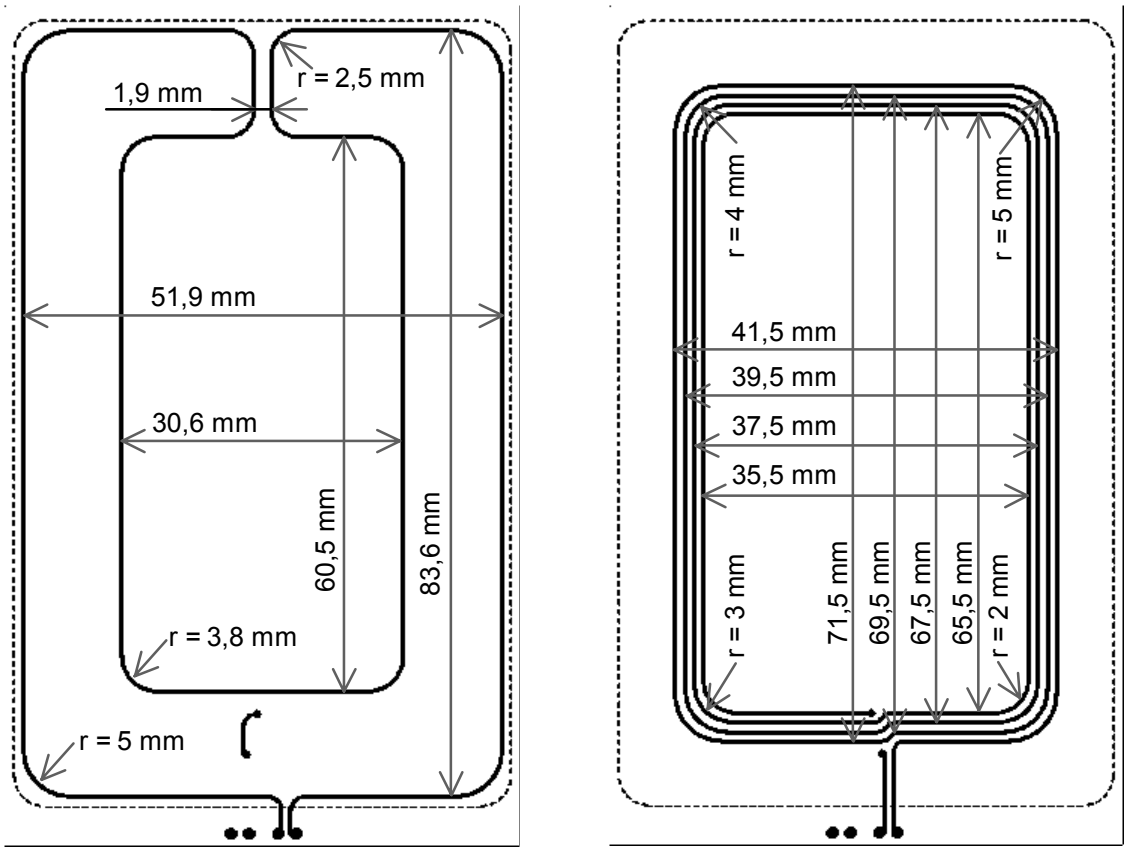

(View from front, pick up coil) **(View from back, main coil)**

Figure I.1 — Antenna layout

Dimensions in millimetres to track centre (drawings are not to scale).

The pick up coil and the main coil shall be concentric.

The two coils track width and spacing shall be 0,5 mm with a relative tolerance of ± 20 %.

PCB: FR4 material thickness 0,76 mm with a relative tolerance of ± 10 %, double sided with 35 µm copper.

NOTE 1 The main coil printed on the back side is the same coil used for the reference PICC, defined in 6.3.5 (i.e. 4 concentric turns wound within an outer size of 72 mm × 42 mm).

--`,,```,,,,````-`-`,,`,,`,`,,`---
© ISO/IEC 2006 All rights reserved
Copyright International Organization for Standardization
Provided by IHS under license with ISO
No reproduction or networking permitted without license from IHS
Not for Resale

NOTE 2 PCBs and finished tools may be made available by:

arsenal research
RFID Testlaboratory
Faradaygasse 3
A-1030 Vienna
Austria
Phone: +43 50 550-6559
Fax: +43 50 550-6660
www.arsenal.ac.at/rfid
email: mci@arsenal.ac.at

or by:

CEA/GRENOBLE
LETI/Département Conception et Intégration dans les Systèmes
17, rue des Martyrs
38054 GRENOBLE Cedex 09
France
Phone +33 (0)4 38 78 32 11
Fax +33 (0)4 38 78 51 82
www-leti.cea.fr
e-mail: leti@cea.fr

© ISO/IEC 2006 – All rights reserved
Copyright International Organization for Standardization
Provided by IHS under license with ISO
No reproduction or networking permitted without license from IHS
Not for Resale

I.2 Circuit diagram

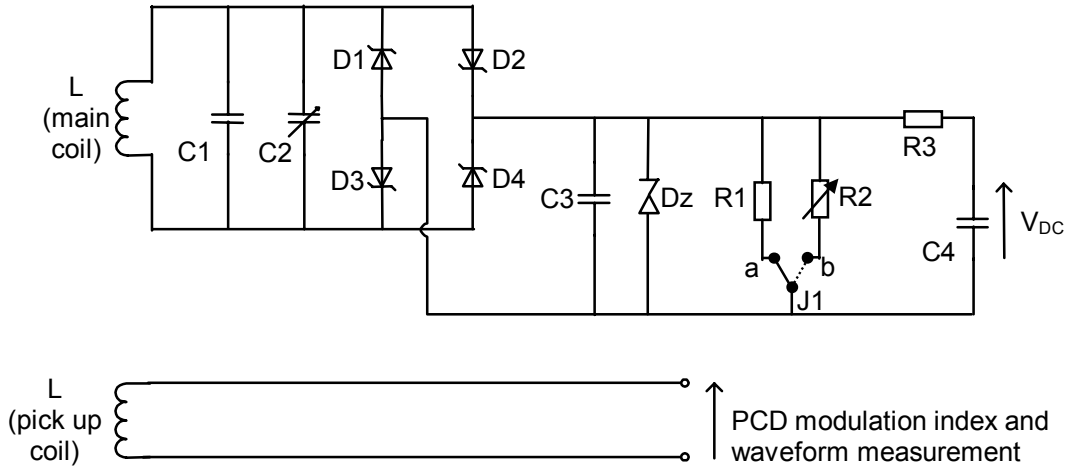

Component	Value
L (main coil)	see I.1
L (pick up coil)	see I.1
C1	Stray capacitance < 5 pF
C2	Variable (e.g. 3 pF – 20 pF)
D1, D2, D3, D4	see characteristics in Table D.1 (BAR 43 or equivalent)
C3	1 nF
R1	1,8 kΩ
R2	0 Ω – 200 Ω
Dz	Zener diode 15 V (BZX84C15 or equivalent)
R3	10 kΩ
C4	1 nF

Figure I.2 — Circuit diagram for Reference PICC for modulation index and waveform test

© ISO/IEC 2006 – All rights reserved
Copyright International Organization for Standardization
Provided by IHS under license with ISO
No reproduction or networking permitted without license from IHS
Not for Resale

ICS 35.240.15

Price based on 11 pages

--`,,```,,,,````-`-`,,`,,`,`,,`---

© ISO 2006 – All rights reserved

Copyright International Organization for Standardization
Provided by IHS under license with ISO
No reproduction or networking permitted without license from IHS

Not for Resale