INTERNATIONAL STANDARD

ISO/IEC 10373-6

First edition
2001-05-15

AMENDMENT 3
2006-10-01

Identification cards — Test methods —

Part 6: Proximity cards

AMENDMENT 3: Protocol test methods for proximity coupling devices

Cartes d'identification — Méthodes d'essai —

Partie 6: Cartes de proximité

AMENDEMENT 3: Méthodes d'essai du protocole pour dispositifs de couplage de proximité

Reference number
ISO/IEC 10373-6:2001/Amd.3:2006(E)

© ISO/IEC 2006

--`,,```,,,,````-`-`,,`,,`,`,,`---

Copyright International Organization for Standardization
Provided by IHS under license with ISO
No reproduction or networking permitted without license from IHS

Not for Resale

PDF disclaimer

This PDF file may contain embedded typefaces. In accordance with Adobe's licensing policy, this file may be printed or viewed but shall not be edited unless the typefaces which are embedded are licensed to and installed on the computer performing the editing. In downloading this file, parties accept therein the responsibility of not infringing Adobe's licensing policy. The ISO Central Secretariat accepts no liability in this area.

Adobe is a trademark of Adobe Systems Incorporated.

Details of the software products used to create this PDF file can be found in the General Info relative to the file; the PDF-creation parameters were optimized for printing. Every care has been taken to ensure that the file is suitable for use by ISO member bodies. In the unlikely event that a problem relating to it is found, please inform the Central Secretariat at the address given below.

© ISO/IEC 2006

All rights reserved. Unless otherwise specified, no part of this publication may be reproduced or utilized in any form or by any means, electronic or mechanical, including photocopying and microfilm, without permission in writing from either ISO at the address below or ISO's member body in the country of the requester.

ISO copyright office
Case postale 56 • CH-1211 Geneva 20
Tel. + 41 22 749 01 11
Fax + 41 22 749 09 47
E-mail copyright@iso.org
Web www.iso.org

Published in Switzerland

--`,,```,,,,````-`-`,,`,,`,`,,`---

Copyright International Organization for Standardization
Provided by IHS under license with ISO
No reproduction or networking permitted without license from IHS

© ISO/IEC 2006 – All rights reserved

Not for Resale

Contents

Page

Foreword ... iv

Annex H (normative) **Additional PCD test methods** ... 2
H.1 PCD-test-apparatus and accessories ... 2
H.1.1 Test method ... 2
H.1.2 PCD-test-apparatus structure ... 2
H.1.3 PCD-test-apparatus interface ... 3
H.1.4 Emulating the I/O protocol ... 3
H.1.5 Generating the I/O character timing in transmission mode ... 4
H.1.6 Measuring and monitoring the RF I/O protocol ... 4
H.1.7 Protocol Analysis ... 4
H.1.8 Protocol activation procedure ... 4
H.1.9 Test scenario ... 5
H.1.10 UT, LT and PCD behaviour ... 5
H.1.11 Relationship of test methods versus base standard requirement ... 6
H.2 Type A specific test methods ... 7
H.2.1 Frame delay time PICC to PCD ... 7
H.2.2 Request Guard Time ... 7
H.2.3 Handling of bit collision during ATQA ... 8
H.2.4 Handling of anticollision loop ... 9
H.2.5 Handling of RATS and ATS ... 15
H.2.6 Handling of PPS response ... 19
H.2.7 Frame size selection mechanism ... 21
H.2.8 Handling of Start-up Frame Guard Time ... 23
H.2.9 Handling of the CID during activation by the PCD ... 24
H.3 Type B specific test methods ... 26
H.3.1 I/O transmission timing ... 26
H.3.2 Frame size selection mechanism ... 26
H.3.3 Handling of the CID during activation by the PCD ... 28
H.4 Test method for logical operations of the PCD ... 30
H.4.1 Handling of the polling loop ... 30
H.4.2 Reaction of the PCD to request for waiting time extension ... 31
H.4.3 Error detection and recovery of a transmission error ... 34
H.4.4 Handling of NAD during chaining ... 48
H.5 Continuous monitoring of packets sent by the PCD ... 49
H.5.1 RFU fields ... 49
H.5.2 RFU values ... 49
H.5.3 R-Block ... 49
H.5.4 S-Block ... 49
H.5.5 PCB ... 49
H.5.6 Short Frame ... 50
H.5.7 Apparatus ... 50
H.5.8 Procedure ... 50
H.5.9 Test report ... 50
H.6 Reported results ... 51

Bibliography ... 55

© ISO/IEC 2006 – All rights reserved

Copyright International Organization for Standardization
Provided by IHS under license with ISO
No reproduction or networking permitted without license from IHS
Not for Resale

Foreword

ISO (the International Organization for Standardization) and IEC (the International Electrotechnical Commission) form the specialized system for worldwide standardization. National bodies that are members of ISO or IEC participate in the development of International Standards through technical committees established by the respective organization to deal with particular fields of technical activity. ISO and IEC technical committees collaborate in fields of mutual interest. Other international organizations, governmental and non-governmental, in liaison with ISO and IEC, also take part in the work. In the field of information technology, ISO and IEC have established a joint technical committee, ISO/IEC JTC 1.

International Standards are drafted in accordance with the rules given in the ISO/IEC Directives, Part 2.

The main task of the joint technical committee is to prepare International Standards. Draft International Standards adopted by the joint technical committee are circulated to national bodies for voting. Publication as an International Standard requires approval by at least 75 % of the national bodies casting a vote.

Attention is drawn to the possibility that some of the elements of this document may be the subject of patent rights. ISO and IEC shall not be held responsible for identifying any or all such patent rights.

Amendment 3 to ISO/IEC 10373-6:2001 was prepared by Joint Technical Committee ISO/IEC JTC 1, *Information technology*, Subcommittee SC 17, *Cards and personal identification*.

© ISO/IEC 2006 – All rights reserved
Copyright International Organization for Standardization
Provided by IHS under license with ISO
No reproduction or networking permitted without license from IHS
Not for Resale

Identification cards — Test methods —

Part 6:
Proximity cards

AMENDMENT 3: Protocol test methods for proximity coupling devices

Page 2, Subclause 3.2

Add the following abbreviations and symbols:

CRC	Cyclic Redundancy Check
CRC_A	Cyclic Redundancy Check, as defined for the PICC type A in ISO/IEC 14443-3
CRC_B	Cyclic Redundancy Check, as defined for the PICC type B in ISO/IEC 14443-3
IUT	Implementation Under Test (ISO/IEC 9646), within the scope of this document IUT represents the PCD under the test
LT	Lower Tester (ISO/IEC 9646), the PICC-emulation part of the PCD-test-apparatus
Mute	No response within a specified timeout
Test Scenario	A defined typical protocol and application-specific communication to be used with the test methods defined in this document
TB-PDU	Transmission Block Protocol Data Unit, which consists of either I-block, R-block or S-Block
TM-PDU	Test Management Protocol Data Unit (ISO/IEC 9646-1, PDU)
SELECT(I)	Select cascade level I command where I is equal to 1, 2 or 3
SAK(cascade)	The SELECT(I) answer with the cascade bit (bit 3) set to 1
SAK(complete)	The SELECT(I) answer with the cascade bit (bit 3) set to 0
BCC	The one byte block checksum as described in ISO/IEC 14443-3
UID	Unique Identifier, Type A
uid*n*	Byte number *n* of Unique Identifier, $n \geq 0$
UT	Upper Tester (ISO/IEC 9646), the master part of the PCD-test-apparatus
UT-APDU	Upper Tester Application Protocol Data Unit: a packet of data to be sent by the PCD to the LT through the RF interface

© ISO/IEC 2006 – All rights reserved

Copyright International Organization for Standardization
Provided by IHS under license with ISO
No reproduction or networking permitted without license from IHS
Not for Resale

Add the following annex after Annex G:

Annex H
(normative)

Additional PCD test methods

H.1 PCD-test-apparatus and accessories

This clause defines the PCD-test-apparatus and test circuits for verifying the operation of the PCD according to ISO/IEC 14443-3:2001 and ISO/IEC 14443-4:2001.

H.1.1 Test method

The ISO/IEC 9646 series abstract model is chosen and the local test method is used for the testing of the ISO/IEC 14443 protocol between the tested PCD and the LT.

H.1.2 PCD-test-apparatus structure

The PCD-test-apparatus consists of two parts:

— Upper Tester (can be personal computer with a host interface suitable for a tested PCD)

— Lower Tester (LT)

Tested PCD is treated as Implementation Under Test (IUT).

When a PCD is embedded in a product, it includes the UT. For this case some tests may not be applicable. Also, in case the standard does not have a specific requirement the test method will end up in a report of capabilities only.

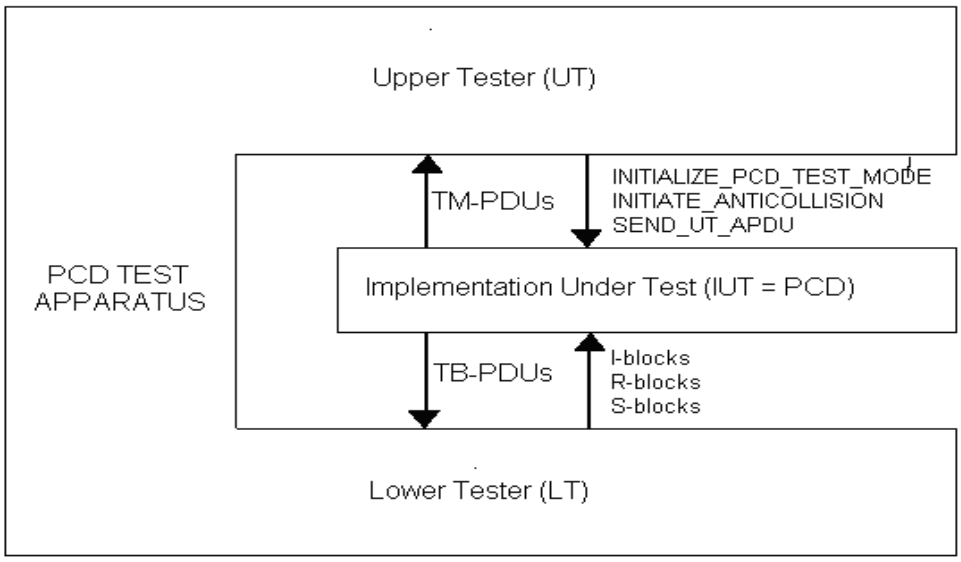

Figure H.1 — Conceptual tester architecture

© ISO/IEC 2006 – All rights reserved
Copyright International Organization for Standardization
Provided by IHS under license with ISO
No reproduction or networking permitted without license from IHS
Not for Resale

The LT part of the PCD-test-apparatus includes:

— A PICC emulation hardware and software device capable of emulating of type A and type B protocols.

— Digital sampling oscilloscope (see ISO/IEC 10373-6:2001, 6.4)

H.1.3 PCD-test-apparatus interface

The UT and the IUT communicate with the TM-PDU (Test Management PDU). The definition of TM-PDUs is product dependant and provided by the IUT manufacturer.

	TM-PDU name	Required IUT action
1	INITIALIZE_PCD_TEST_MODE	Return to Power On state (The IUT is expected to enter to anticollision loop). The IUT returns the result code of its action to the UT.
2	INITIATE_ANTICOLLISION	Initiate anticollision sequence arriving at the ACTIVE state when a PICC is found (if the IUT starts the anticollision sequence automatically upon initialize, the sequence can be empty). The IUT returns the result code of its action to the UT.
3	SEND_UT_APDU	Transmit the UT_APDU through the RF interface to LT and return the IUT result code of its action to the UT. The response from the IUT shall include the answer of LT to the sent UT_APDU.

Figure H.2 — Logical interface commands

The PCD-test-apparatus shall be able to initialize the IUT utility information provided by the IUT manufacturer over the UT interface and to configure itself to perform the necessary procedures, protocols and analysis over its LT interface.

H.1.4 Emulating the I/O protocol

The PCD-test-apparatus at its LT interface shall be able to emulate the protocol type A and type B and PICC applications, which are required to run the Test Scenario. The LT shall be able to break the transmitted packets into chained blocks with the required length.

It shall be possible to configure the LT to simulate different options:

— NAD and CID configuration;

— Frame size, bit rates and any other parameter as required for the implementation of the test methods.

© ISO/IEC 2006 – All rights reserved

Copyright International Organization for Standardization
Provided by IHS under license with ISO
No reproduction or networking permitted without license from IHS
Not for Resale

H.1.5 Generating the I/O character timing in transmission mode

The PCD-test-apparatus at its LT interface shall be able to generate the I/O bit stream according to ISO/IEC 14443-3:2001. Timing parameters: start bit duration, extra guard time (type B only), bit duration, frame delay time, start of frame width, end of frame width shall be configurable. For the purpose of tests of type A, the LT shall be capable of simulating a bit collision at a selected bit position(s).

H.1.6 Measuring and monitoring the RF I/O protocol

The PCD-test-apparatus at its LT interface shall be able to measure and monitor the timing of the logical low and high states transmitted by the PCD.

H.1.7 Protocol Analysis

The PCD-test-apparatus shall be able to analyze the I/O-bit stream at its LT interface in accordance with protocol type A and type B as specified in ISO/IEC 14443-3:2001 and ISO/IEC 14443-4:2001 and extract the logical data flow for further protocol analysis.

H.1.8 Protocol activation procedure

H.1.8.1 Activation procedure for anticollision test methods

Activate the LT by the following sequence:

a) Configure the LT to emulate the type A or type B protocol.

b) The UT sends INITIALIZE_PCD_TEST_MODE TM-PDU to the PCD.

c) The UT sends INITIATE_ANTICOLLISION TM-PDU to the PCD.

H.1.8.2 Activation procedure for type A protocol test methods

Activate the LT by the following sequence:

a) Configure the LT to emulate the type A protocol.

b) The UT sends INITIALIZE_PCD_TEST_MODE TM-PDU to the PCD.

c) The UT sends INITIATE_ANTICOLLISION TM-PDU to the PCD. The PCD shall apply the anticollision sequence as defined in ISO/IEC 14443-3:2001, Clause 6 (request, anticollision loop and select). The PCD shall apply the protocol activation sequence as defined in ISO/IEC 14443-4:2001, Clause 5.

d) The PCD reports the UT the result of the activation procedure.

H.1.8.3 Activation procedure for type B protocol test methods

Activate the LT by the following sequence:

a) Configure the LT to emulate the type B protocol.

b) The UT sends INITIALIZE_PCD_TEST_MODE TM-PDU to the PCD.

c) The UT sends INITIATE_ANTICOLLISION TM-PDU to the PCD. The PCD shall apply the anticollision sequence as defined in ISO/IEC 14443-3:2001, Clause 7.

d) The PCD reports the UT the result of the activation procedure.

--`,,```,,,,````-`-`,,`,,`,`,,`---
Copyright International Organization for Standardization
Provided by IHS under license with ISO
No reproduction or networking permitted without license from IHS
© ISO/IEC 2006 – All rights reserved
Not for Resale

H.1.9 Test scenario

H.1.9.1 Description

Testing of the IUT as defined in this document requires a Test Scenario to be executed. This Test Scenario is a 'typical protocol and application specific communication', dependent on the protocol and application specific functionality foreseen for the normal use of and implemented in the IUT.

The typical Test Scenario is the set of command TM-PDUs defined in H.1.3.

The Test Scenario shall be defined by the entity carrying out these tests and shall be documented with the test results. The Test Scenario shall encompass a representative subset or preferably, if practical, the full functionality of the IUT expected to be utilized during normal use.

NOTE The testing entity may require information about the implemented protocol and functionality.

The UT-APDU to be sent may be one from the following:

— UT_TEST_COMMAND1, decided by the PCD-test-apparatus, specifies the ISO instruction used as the default instruction for test scenarios not needing PCD chaining. (In case PCD decides anyway to chain, the test scenario should be adapted accordingly by the test laboratory).

— UT_TEST_COMMAND2, decided by the PCD-test-apparatus, specifies the ISO instruction used as the default instruction for test scenarios dealing with PCD chaining.

H.1.9.2 Test scenario example

The typical Test Scenario may be as follows:

```
INITIALIZE_PCD_TEST_MODE
INITIATE_ANTICOLLISION
SEND_UT_APDU (UT_TEST_COMMAND1)
SEND_UT_APDU (UT_TEST_COMMAND2)
….
```

H.1.10 UT, LT and PCD behaviour

The following items summarize the behaviour of the UT, the LT and the PCD:

a) The UT runs the activation procedure as defined in H.1.8.

b) If the activation procedure went wrong, the PCD goes to exception processing. This exception processing may include reporting the error to the UT.

c) In case of anticollision test methods the PCD-test-apparatus ends the test at this point. For protocol test methods the UT continues to the next step.

d) The UT sends the first command UT_APDU to the PCD.

e) The PCD is expected to transfer this command UT_APDU to the LT using TB-PDUs. The PCD splits the current UT-APDU into the appropriate TB-PDUs (I-blocks), sends the first I-block to LT and response block is awaited. The PCD manages communication blocks according to ISO/IEC 14443-4.

f) The command UT_APDU is received by the LT. The LT sends the response UT_APDU to the PCD. The LT manages communication blocks (TB-PDUs) according to ISO/IEC 14443-4 (the LT may use chaining mechanism at any time even if not mandated by either PCD or PICC maximum frame size). The PCD is expected to transfer response UT_APDU, received from the LT, back to the UT.

--`,,```,,,,````-`-`,,`,,`,`,,`---

© ISO/IEC 2006 – All rights reserved

Copyright International Organization for Standardization
Provided by IHS under license with ISO
No reproduction or networking permitted without license from IHS
Not for Resale

g) If the command failed at protocol level (i.e. error detected by the PCD), the PCD goes to exception processing. Exception processing may include error reporting to the UT.

h) If the command succeeded, the PCD reports the UT about successful result. In this case, if the test scenario defines additional UT-APDU to be sent to the LT, the UT sends the next UT-APDU to the PCD. This loop continues until the last test UT-APDU is sent.

H.1.11 Relationship of test methods versus base standard requirement

All tests shall be executed and reported in the corresponding tables.

Table H.1 — Type A specific test methods

Test method from ISO/IEC 10373-6		Corresponding requirement	
Clause	Name	Base standard	Clauses
H.2.1	Frame delay time PICC to PCD	ISO/IEC 14443-3:2001	6.1.3
H.2.2	Request Guard Time	ISO/IEC 14443-3:2001	6.1.4
H.2.3	Handling of bit collision during ATQA	ISO/IEC 14443-3:2001	6.4.2
H.2.4	Handling of anticollision loop	ISO/IEC 14443-3:2001	6.4.3
H.2.5	Handling of RATS and ATS	ISO/IEC 14443-4:2001	5.6.1.1
H.2.6	Handling of PPS response	ISO/IEC 14443-4:2001	5.6.2.1
H.2.7	Frame size selection mechanism	ISO/IEC 14443-4:2001	5.2
H.2.8	Handling of Start-up Frame Guard Time	ISO/IEC 14443-4:2001	5.2.5
H.2.9	Handling of the CID during activation by the PCD	ISO/IEC 14443-4:2001	5.6.3

Table H.2 — Type B specific test methods

Test method from ISO/IEC 10373-6		Corresponding requirement	
Clause	Name	Base standard	Clauses
H.3.1	I/O transmission timing	ISO/IEC 14443-3:2001	7.1
H3.2	Frame size selection mechanism	ISO/IEC 14443-3:2001	7.9
H.3.3	Handling of the CID during activation by the PCD	ISO/IEC 14443-3:2001	7.10

Table H.3 — Test methods for logical operation

Test method from ISO/IEC 10373-6		Corresponding requirement	
Clause	Name	Base standard	Clauses
H.4.1	Handling of the polling loop	ISO/IEC 14443-3:2001	5
H.4.2	Reaction of the PCD to request for waiting time extension	ISO/IEC 14443-4:2001	7.3
H.4.3	Error detection and recovery of a transmission error	ISO/IEC 14443-4:2001	7.5.5
H.4.4	Handling of NAD during chaining	ISO/IEC 14443-4:2001	7.1.1.3

© ISO/IEC 2006 – All rights reserved
Copyright International Organization for Standardization
Provided by IHS under license with ISO
No reproduction or networking permitted without license from IHS
Not for Resale

H.2 Type A specific test methods

H.2.1 Frame delay time PICC to PCD

The purpose of this test is to determine the timing between a PICC frame and the next PCD frame.

H.2.1.1 Apparatus

See H.1.

H.2.1.2 Procedure

Place the LT into the PCD operating volume.

During the following procedure the RF Input/Receive data shall be continuously monitored and verified correct to ISO/IEC 14443-2:2001. All signal transitions (level and timing) as well as the logical content of the communication shall be recorded.

Use the following sequence:

a) The UT performs the activation procedure according to H.1.8.1

b) The LT waits until the PCD sends a valid REQA/WUPA Command frame.

c) The LT answers with a valid ATQA.

d) The LT waits until the PCD sends a valid Anticollision command according to Figure 6 in the ISO/IEC 14443-3:2001.

e) Measure the time between the last modulation transmitted by the LT and the first pause transmitted by the PCD (see ISO/IEC 14443-3:2001, 6.1.3).

H.2.1.3 Test report

Report the signal recording. Fill the item 1 of “Table H.4 — Type A Specific Timing table” with measured value of frame delay time and Table H.6.

H.2.2 Request Guard Time

The purpose of this test is to determine the Request Guard Time of two consecutive REQA/WUPA commands. This test is relevant for PCDs, which send consecutive REQA/WUPA.

H.2.2.1 Apparatus

See H.1.

H.2.2.2 Procedure

Place the LT into the PCD operating volume.

During the following procedure the RF Input/Receive data shall be continuously monitored and verified correct to ISO/IEC 14443-2:2001. All signal transitions (level and timing) as well as the logical content of the communication shall be recorded.

© ISO/IEC 2006 – All rights reserved
Copyright International Organization for Standardization
Provided by IHS under license with ISO
No reproduction or networking permitted without license from IHS
Not for Resale

Use the following sequence:

a) The UT performs the activation procedure according to H.1.8.1.

b) The LT waits until the PCD sends a valid REQA/WUPA Command frame. The LT remains mute.

c) The LT waits until the PCD sends a valid REQA/WUPA Command frame. The LT remains mute.

d) Measure the time between the start bits of two consecutive REQA/WUPA (see ISO/IEC 14443-3:2001, 6.1.4).

H.2.2.3 Test report

Report the signal recording. Fill item 2 in “Table H.4 — Type A Specific Timing table” with measured value of request guard time and in the appropriate row in Table H.6.

H.2.3 Handling of bit collision during ATQA

The purpose of this test is to determine the handling of bit collision during ATQA by the PCD.

H.2.3.1 Apparatus

See H.1.

H.2.3.2 Procedure

Place the LT into the PCD operating volume.

Use the following sequence:

a) The UT performs the activation procedure according to H.1.8.1.

b) The LT waits until the PCD sends a valid REQA/WUPA Command frame).

c) Maintain the LT to answer with ATQA using simulation of the bit collision at bit N (N from 1 up to 16). Collision at a bit causes a collision also in associated parity bit.

d) Record the presence, the content of the PCD response.

H.2.3.3 Expected result

The PCD shall start the bit oriented anticollision algorithm.

H.2.3.4 Test report

Record the presence and the content of the PCD commands.

© ISO/IEC 2006 – All rights reserved
Copyright International Organization for Standardization
Provided by IHS under license with ISO
No reproduction or networking permitted without license from IHS
Not for Resale

Fill the appropriate row in “Table H.6 — Reported Results for type A specific test methods“ according to the test results as follows:

Explanation	Test result
If the PCD starts the bit oriented anticollision loop	Pass
Any other case	Fail

Figure H.3 — Result criteria for Handling of bit collision during ATQA

H.2.4 Handling of anticollision loop

The purpose of this test is to determine the handling of bit anticollision loop according to ISO/IEC 14443-3:2001, 6.4.3.

H.2.4.1 Apparatus

See H.1.

H.2.4.2 Procedure

Place the LT into the PCD operating volume.

H.2.4.2.1 Procedure 1 (single size UID)

Use the following sequence:

a) The UT performs the activation procedure according to H.1.8.1.

b) The LT waits until the PCD sends a valid REQA/WUPA Command frame).

c) The LT answers with ATQA indicating bit frame anticollision and UID size: single (bits b8 and b7 equal (00)b).

d) The PCD shall send ANTICOLLISION Command '93 20' (cascade level 1).

e) The LT answers with UID CL1 ('uid0 uid1 uid2 uid3 BCC').

f) The PCD shall send SELECT Command '93 70 uid0 uid1 uid2 uid3 BCC CRC_A'.

g) The LT answers with SAK (cascade bit is cleared), indicating that UID is complete.

© ISO/IEC 2006 – All rights reserved

Copyright International Organization for Standardization
Provided by IHS under license with ISO
No reproduction or networking permitted without license from IHS
Not for Resale

Scenario H 1 — Handling of anticollision loop for PICC with single size UID (Procedure 1)

Test	PCD		LT	Stage
REQA/WUPA	REQA/WUPA	→		
		←	ATQA (single size UID)	1
ANTICOLLISION Level 1	ANTICOLLISION Command Level 1 ('93 20')	→		
		←	UID CL1 ('uid0 uid1 uid2 uid3 BCC')	2
SELECT	SELECT Command ('93 70 uid0 uid1 uid2 uid3 BCC CRC_A')	→		
		←	SAK(complete)	3

H.2.4.2.1.1 Expected result

The PCD shall operate as described in Scenario H 1.

H.2.4.2.1.2 Test report

Record the presence, the content of the PCD commands.

Fill the appropriate row in “Table H.6 — Reported Results for type A specific test methods“ according to the test results as follows:

Explanation	Test result
If the PCD command sequence is as expected	Pass
Any other case	Fail

Figure H.4 — Result criteria for Handling of anticollision loop Procedure 1 (single size UID)

H.2.4.2.2 Procedure 2 (double size UID)

Use the following sequence:

a) The UT performs the activation procedure according to H.1.8.1.

b) The LT waits until the PCD sends a valid REQA/WUPA Command frame).

c) The LT answers with ATQA indicating bit frame anticollision and UID size: double (bits b8 and b7 equal (01)b).

d) The PCD shall send ANTICOLLISION Command '93 20' (cascade level 1).

e) The LT answers with UID CL1 ('88 uid0 uid1 uid2 BCC').

f) The PCD shall send SELECT Command '93 70 88 uid0 uid1 uid2 BCC CRC_A'.

© ISO/IEC 2006 – All rights reserved
Copyright International Organization for Standardization
Provided by IHS under license with ISO
No reproduction or networking permitted without license from IHS
Not for Resale

g) The LT answers with SAK (cascade bit is set).

h) The PCD shall increase the cascade level and shall send ANTICOLLISION Command '95 20' (cascade level 2).

i) The LT answers with UID CL2 ('uid3 uid4 uid5 uid6 BCC').

j) The PCD shall send SELECT Command '95 70 uid3 uid4 uid5 uid6 BCC CRC_A'.

k) The LT answers with SAK (cascade bit is cleared), indicating that UID is complete.

Scenario H 2 — Handling of anticollision loop for PICC with double size UID (Procedure 2)

Test	PCD		LT	Stage
REQA/WUPA	REQA/WUPA	→		
		←	ATQA (double size UID)	1
ANTICOLLISION Level 1	ANTICOLLISION Command Level 1 ('93 20')	→		
		←	UID CL1 ('88 uid0 uid1 uid2 BCC')	2
SELECT	SELECT Command ('93 70 88 uid0 uid1 uid2 BCC CRC_A')	→		
		←	SAK(cascade)	3
ANTICOLLISION Level 2	ANTICOLLISION Command Level 2 ('95 20')	→		
		←	UID CL2 ('uid3 uid4 uid5 uid6 BCC')	4
SELECT	SELECT Command ('95 70 uid3 uid4 uid5 uid6 BCC CRC_A')	→		
		←	SAK(complete)	5

H.2.4.2.2.1 Expected result

The PCD shall operate as described in Scenario H 2.

H.2.4.2.2.2 Test report

Record the presence, the content of the PCD commands.

© ISO/IEC 2006 – All rights reserved
Copyright International Organization for Standardization
Provided by IHS under license with ISO
No reproduction or networking permitted without license from IHS
Not for Resale

Fill the appropriate row in “Table H.6 — Reported Results for type A specific test methods“ according to the test results as follows:

Explanation	Test result
If the PCD command sequence is as expected	Pass
Any other case	Fail

Figure H.5 — Result criteria for Handling of anticollision loop Procedure 2 (double size UID)

H.2.4.2.3 Procedure 3 (triple size UID)

Use the following sequence:

a) The UT performs the activation procedure according to H.1.8.1.

b) The LT waits until the PCD sends a valid REQA/WUPA Command frame).

c) The LT answers with ATQA indicating bit frame anticollision and UID size: triple (bits b8 and b7 equal (10)b).

d) The PCD shall send ANTICOLLISION Command '93 20' (cascade level 1).

e) The LT answers with UID CL1 ('88 uid0 uid1 uid2 BCC').

f) The PCD shall send SELECT Command '93 70 88 uid0 uid1 uid2 BCC CRC_A'.

g) The LT answers with SAK (cascade bit is set).

h) The PCD shall increase the cascade level and shall send ANTICOLLISION Command '95 20' (cascade level 2).

i) The LT answers with UID CL2 ('88 uid3 uid4 uid5 BCC').

j) The PCD shall send SELECT Command '95 70 88 uid3 uid 4 uid5 BCC CRC_A'.

k) The LT answers with SAK (cascade bit is set).

l) The PCD shall increase the cascade level and shall send ANTICOLLISION Command '97 20' (cascade level 3).

m) The LT answers with UID CL3 ('uid6 uid7 uid8 uid9 BCC').

n) The PCD shall send SELECT Command '97 70 uid6 uid7 uid8 uid9 BCC CRC_A'.

o) The LT answers with SAK (cascade bit is cleared), indicating that UID is complete.

--`,,```,,,,````-`-`,,`,,`,`,,`---

© ISO/IEC 2006 – All rights reserved
Copyright International Organization for Standardization
Provided by IHS under license with ISO
No reproduction or networking permitted without license from IHS
Not for Resale

Scenario H 3 — Handling of anticollision loop for PICC with triple size UID (Procedure 3)

Test	PCD		LT	Stage
REQA/WUPA	REQA/WUPA	→		
		←	ATQA (triple size UID)	1
ANTICOLLISION Level 1	ANTICOLLISION Command Level 1 ('93 20')	→		
		←	UID CL1 ('88 uid0 uid1 uid2 BCC')	2
SELECT	SELECT Command ('93 70 88 uid0 uid1 uid2 BCC CRC_A')	→		
		←	SAK(cascade)	3
ANTICOLLISION Level 2	ANTICOLLISION Command Level 2 ('95 20')	→		
		←	UID CL2 ('88 uid3 uid4 uid5 BCC')	4
SELECT	SELECT Command ('95 70 88 uid3 uid4 uid5 BCC CRC_A')	→		
		←	SAK(cascade)	5
ANTICOLLISION Level 3	ANTICOLLISION Command Level 3 ('97 20')	→		
		←	UID CL3 ('uid6 uid7 uid8 uid9 BCC')	6
SELECT	SELECT Command ('97 70 uid6 uid7 uid8 uid9 BCC CRC_A')	→		
		←	SAK(complete)	7

H.2.4.2.3.1 Expected result

The PCD shall operate as described in Scenario H 3.

H.2.4.2.3.2 Test report

Record the presence, the content of the PCD commands.

© ISO/IEC 2006 – All rights reserved

Copyright International Organization for Standardization
Provided by IHS under license with ISO
No reproduction or networking permitted without license from IHS
Not for Resale

Fill the appropriate row in “Table H.6 — Reported Results for type A specific test methods“ according to the test results as follows:

Explanation	Test result
If the PCD command sequence is as expected	Pass
Any other case	Fail

Figure H.6 — Result criteria for Handling of anticollision loop Procedure 3 (triple size UID)

H.2.4.2.4 Procedure 4 (Full Bitwise Anticollision, single size UID)

Use the following sequence:

a) The UT performs the activation procedure according to H.1.8.1.

b) The LT waits until the PCD sends a valid REQA or WUPA Command frame.

c) The LT answers with ATQA indicating bit frame anticollision and UID size: single (bits b8 and b7 equal (00)b).

d) The PCD shall send ANTICOLLISION Command: '93 20'.

e) The LT answers by a stream of 40 bits by emulating a collision on every bit, including parity bits.

f) Repeat the steps g) to h) for values k from 1 to 31.

g) The PCD shall send ANTICOLLISION Command: '93' NVB $UIDTX_1$[[1..k]], where $UIDTX_1$[[1..k-1]] is either empty (i.e. k=1) or the value already known by the PCD and $UIDTX_1$[[k]] is an arbitrary bit selected by the PCD.

h) The LT answers by a stream of 40 minus k bits by emulating a collision on every bit, including parity bits.

i) The PCD may optionally send ANTICOLLISION Command: '93 60’ UIDTX1[[1..32]]. In this case the LT answers with BCC.

j) The PCD shall send SELECT Command ‘93 70’ $UIDTX_1$[[1..32]] BCC CRC_A, with BCC calculated by the PCD if it has not run the optional step i).

k) The LT answers with SAK (cascade bit is cleared), indicating that UID is complete.

Scenario H 4 — Handling of full bitwise anticollision loop for PICC (Procedure 4)

Test	PCD		LT	Stage
REQA/WUPA	REQA/WUPA	→	ATQA (single size UID)	1
		←		
ANTICOLLISION	ANTICOLLISION Command (’93 20’)	→		2
		←	40 bits full collision frame	

© ISO/IEC 2006 – All rights reserved
Copyright International Organization for Standardization
Provided by IHS under license with ISO
No reproduction or networking permitted without license from IHS
Not for Resale

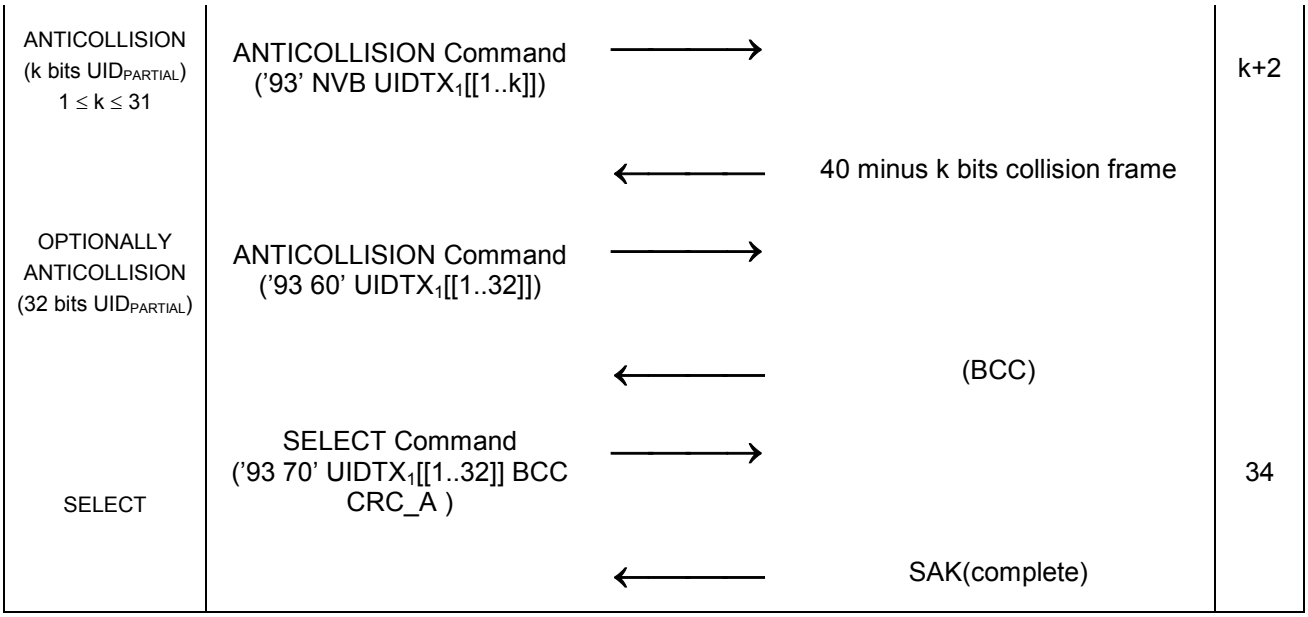

H.2.4.2.4.1 Expected result

The PCD shall operate as described in Scenario H 4.

H.2.4.2.4.2 Test report

Record the presence, the content of the PCD commands.

Fill the appropriate row in "Table H.6 — Reported Results for type A specific test methods" according to the test results as follows:

Explanation	Test result
If the PCD command sequence is as expected	Pass
Any other case	Fail

Figure H.7 — Result criteria for Procedure 4 (Full Bitwise Anticollision, single size UID)

H.2.5 Handling of RATS and ATS

The purpose of this test is to determine the handling of RATS and ATS by the PCD according to ISO/IEC 14443-4:2001, 5.6.1.1.

H.2.5.1 Apparatus

See H.1.

H.2.5.2 Procedure

Place the LT into the PCD operating volume.

© ISO/IEC 2006 – All rights reserved

Copyright International Organization for Standardization
Provided by IHS under license with ISO
No reproduction or networking permitted without license from IHS
Not for Resale

H.2.5.2.1 Procedure 1

Use the following sequence:

a) The UT performs the activation procedure according to H.1.8.1.

b) The LT answers relevant anticollision messages and waits until the PCD sends a valid RATS command frame.

c) The LT does not respond to RATS (Mute).

d) The PCD may send a valid RATS command frame.

e) If the PCD has sent a second RATS, the LT does not respond to the RATS (Mute).

f) The PCD shall start the deactivation sequence defined in ISO/IEC 14443-4:2001, Clause 8.

g) Repeat the procedure with an erroneous ATS frame (use a bad CRC_A) instead of Mute.

Scenario H 5 — Handling of RATS and ATS, Procedure 1

Test	PCD		LT
Mute or erroneous ATS frame	RATS command frame (e.g.'E0 01 CRC_A')	→	
		←	Mute / erroneous ATS frame [a]
	Optionally RATS command frame once more (e.g.'E0 01 CRC_A')	→	
		←	Mute / erroneous ATS frame [a]
start deactivation	DESELECT	→	

[a] Determined in step g)

H.2.5.2.1.1 Expected result

The PCD shall operate in accordance with Scenario H 5.

H.2.5.2.1.2 Test report

Record the presence, the content of the PCD commands.

--`,,```,,,,````-`-`,,`,,`,`,,`---

© ISO/IEC 2006 – All rights reserved
Copyright International Organization for Standardization
Provided by IHS under license with ISO
No reproduction or networking permitted without license from IHS
Not for Resale

Fill the appropriate row in “Table H.6 — Reported Results for type A specific test methods“ according to the test results as follows:

Explanation	Test result
If the PCD command sequence is as expected, including f)	Pass
Any other case	Fail

Figure H.8 — Result criteria Procedure 1

H.2.5.2.2 Procedure 2

Use the following sequence:

a) The UT performs the activation procedure according to H.1.8.1.

b) The LT answers relevant anticollision messages and waits until the PCD sends a valid RATS command frame.

c) The LT answers with a valid ATS without TA byte.

d) The PCD shall return the result code of its action to the UT.

e) The UT sends the SEND_UT_APDU(UT_TEST_COMMAND1) to the PCD.

f) The PCD is expected to send any I-block (including empty) to the LT, possibly after PICC presence check sequences.

Scenario H 6 — Handling of RATS and ATS, Procedure 2

Test	PCD		LT
correct ATS	RATS command frame (e.g.‘E0 01 CRC_A’)	→	
		←	ATS
continue operation	Any I-block (including empty)	→	

H.2.5.2.2.1 Expected result

The PCD command is expected according to the Scenario H 6.

H.2.5.2.2.2 Test report

Record the presence, the content of the PCD commands.

© ISO/IEC 2006 – All rights reserved

Copyright International Organization for Standardization
Provided by IHS under license with ISO
No reproduction or networking permitted without license from IHS
Not for Resale

Fill the appropriate row in “Table H.6 — Reported Results for type A specific test methods“ according to the test results as follows:

Explanation	Test result
If the PCD command sequence is as expected	Pass
Any other case	Fail

Figure H.9 — Result criteria Procedure 2

H.2.5.2.3 Procedure 3

In case the PCD does not use the optional retransmission of RATS according to ISO/IEC 14443-4:2001, 5.6.1.1, skip this procedure.

In case the PCD uses the optional retransmission of RATS according to ISO/IEC 14443-4:2001, 5.6.1.1 use the following sequence:

a) The UT performs the activation procedure according to H.1.8.1.

b) The LT answers relevant anticollision messages and waits until the PCD sends a valid RATS command frame.

c) When the PCD has transmitted the RATS, the LT does not respond to the RATS (Mute).

d) When the PCD has retransmitted the RATS, the LT answers with a valid ATS.

e) The PCD is expected to send any I-block (including empty) to the LT, possibly after PICC presence check sequences, or a PPS request.

f) Repeat the procedure with an erroneous ATS frame (use a bad CRC_A) instead of Mute.

Scenario H 7 — Handling of RATS and ATS, Procedure 3

Test	PCD		LT
erroneous ATS	RATS command frame (e.g.‘E0 01 CRC_A’)	→	
		←	Mute / erroneous ATS frame [a]
PCD retransmits RATS	RATS command frame (e.g.‘E0 01 CRC_A’)	→	
		←	ATS
Continue operation	Any I-block (including empty) or PPS request	→	

[a] Determined in step f)

© ISO/IEC 2006 – All rights reserved
Copyright International Organization for Standardization
Provided by IHS under license with ISO
No reproduction or networking permitted without license from IHS
Not for Resale

H.2.5.2.3.1 Expected result

The PCD command is expected according to the Scenario H 7.

H.2.5.2.3.2 Test report

Record the presence, the content of the PCD commands.

Fill the appropriate row in “Table H.6 — Reported Results for type A specific test methods“ according to the test results as follows:

Explanation	Test result
If the PCD command sequence is as expected	Pass
Any other case	Fail

Figure H.10 — Result criteria for Procedure 3

H.2.6 Handling of PPS response

The purpose of this test is to determine the handling of the PPS request according to ISO/IEC 14443-4:2001, 5.6.2.1. This test is applicable only for the PCD, which uses Protocol and Parameter Selection mechanism as a part of the PICC activation sequence. In case the PCD does not use the PPS mechanism the test report column shall be empty.

H.2.6.1 Apparatus

See H.1.

H.2.6.2 Preliminary Procedure

Use the following sequence to put the PCD into the state required by this test:

a) Place the LT into the PCD operating volume.

b) The UT performs the activation procedure according to H.1.8.1.

c) The LT answers relevant anticollision messages and waits until the PCD sends the RATS.

d) The LT answers with ATS (with valid TA<>'00' indicating, that higher bit rates are supported and therefore PPS is supported by this PICC and thus the PCD may perform the PPS sequence).

H.2.6.2.1 Procedure 1

Use the following sequence immediately after procedure H.2.6.2:

a) The LT waits until the PCD sends a valid PPS Request. Ensure, that PPSS start byte, Parameter 0 and Parameter 1 do not include RFU values.

NOTE It is not mandatory to send a PPS request.

b) The LT answers with PPS response.

© ISO/IEC 2006 – All rights reserved

Copyright International Organization for Standardization
Provided by IHS under license with ISO
No reproduction or networking permitted without license from IHS
Not for Resale

c) The UT sends the SEND_UT_APDU(UT_TEST_COMMAND1) to the PCD.

d) The PCD shall transmit I-block using the selected parameters, possibly after PICC presence check sequences.

Scenario H 8 — Handling of PPS request and response, Procedure 1

Test	PCD		LT
correct PPS response	PPS request	→	
		←	PPS response
		→	
Set parameters and continue operation	The I-block provided by the UT		

H.2.6.2.1.1 Expected result

The PCD command is expected according to the Scenario H 8. Ensure, that PPSS start byte, Parameter 0 and Parameter 1 do not include RFU values.

H.2.6.2.1.2 Test report

Record the presence, the content of the PCD commands.

Fill the appropriate row in “Table H.6 — Reported Results for type A specific test methods“ according to the test results as follows:

Explanation	Test result
If the PCD command sequence is as expected and PPS request command does not include RFU values	Pass
Any other case	Fail

Figure H.11 — Result criteria for Handling of PPS response Procedure 1

H.2.6.2.2 Procedure 2

Use the following sequence immediately after procedure H.2.6.2:

a) The LT waits until the PCD sends a valid PPS Request.

b) The LT answers with erroneous PPS response (use a bad CRC_A).

c) The PCD may retransmit a valid PPS Request or continue operation (e.g. send an I-block), both using the default bit rate.

d) Repeat the procedure with no response to the PPS Request (Mute).

© ISO/IEC 2006 – All rights reserved
Copyright International Organization for Standardization
Provided by IHS under license with ISO
No reproduction or networking permitted without license from IHS
Not for Resale

Scenario H 9 — Handling of PPS request and response, Procedure 2

Test	PCD		LT
erroneous PPS response or Mute	PPS request	→	
		←	Erroneous PPS response or Mute [a]
	Optional PPS request or an I-block	→	
[a] Determined in step d)			

H.2.6.2.2.1 Expected result

The PCD command is expected according to the Scenario H 9.

H.2.6.2.2.2 Test report

Record the presence, the content of the PCD commands.

Fill the appropriate row in “Table H.6 — Reported Results for type A specific test methods“ according to the test results as follows:

Explanation	Test result
If the PCD command sequence is as expected	Pass
Any other case	Fail

Figure H.12 — Result criteria for Handling of PPS response Procedure 2

H.2.7 Frame size selection mechanism

The purpose of this test is to verify the correct handling of transmitted frame size. The transmitted frames shall not be longer than FSCI indication. This test shall be executed for at least FSCI set to 0, 1 and 8.

H.2.7.1 Apparatus

See H.1.

H.2.7.2 Procedure

Place the LT into the PCD operating volume.

Use the following sequence:

a) The UT performs the activation procedure according to H.1.8.1.

b) The LT answers relevant anticollision messages and waits until the PCD sends a valid RATS command frame.

© ISO/IEC 2006 – All rights reserved

Copyright International Organization for Standardization
Provided by IHS under license with ISO
No reproduction or networking permitted without license from IHS
Not for Resale

c) The LT answers with a valid ATS. For the purpose of this test, the LT returns format byte T0 equal '70' (see ISO/IEC 14443-4:2001, 5.2.3). In case there is a PPS request the LT will answer it before continuing with the next step:

   Maximum size of a frame accepted by the LT is in accordance with FSCI.

d) The UT sends the SEND_UT_APDU(UT_TEST_COMMAND2) to the PCD where the data length shall be more than the maximum size of a frame accepted by the LT.

e) The PCD shall send the following $I(1)_0$ block with maximum length of in accordance with FSCI.

Scenario H 10 — Frame size selection mechanism

PCD		LT
RATS command frame (e.g. 'E0 01 CRC_A')	→	
	←	ATS, T0 = '70'
Optional PPS request is possible and would be processed by the LT before the I-block	→	
	←	PPS response in case of PPS request
$I(1)_0$ (maximum length in accordance with FSCI)	→	

H.2.7.3 Expected result

The PCD shall answer as described in Scenario H 10 for all executions of the method.

H.2.7.4 Test report

Fill the appropriate row in "Table H.6 — Reported Results for type A specific test methods" according to the test results as follows:

Explanation	Test result
If the PCD's behaviour matches the expected Test Scenario exactly	Pass
If the PCD fails on at least one step of the Test Scenario	Fail

Figure H.13 — Result criteria for Frame size selection mechanism

© ISO/IEC 2006 – All rights reserved
Copyright International Organization for Standardization
Provided by IHS under license with ISO
No reproduction or networking permitted without license from IHS
Not for Resale

H.2.8 Handling of Start-up Frame Guard Time

The purpose of this test is to determine the PCD transmission timing according to ISO/IEC 14443-4:2001, 5.2.5.

This test shall be executed for at least SFGI set to 0, 1 and 14.

H.2.8.1 Apparatus

See H.1.

H.2.8.2 Procedure

Place the LT into the PCD operating volume.

During the following procedure the RF Input/Receive data shall be continuously monitored and verified correct to ISO/IEC 14443-2:2001. All signal transitions (level and timing) as well as the logical content of the communication shall be recorded.

Use the following sequence:

a) The UT performs the activation procedure according to H.1.8.1.

b) The LT answers relevant anticollision messages and waits until the PCD sends a valid RATS command frame.

c) The LT answers with a valid ATS. For the purpose of this test the LT returns interface byte TB (1) equal '0E' (see ISO/IEC 14443-4:2001, 5.2.5). In case there is a PPS request the LT will answer it before continuing with the next step.

   Value '0E' = (00001110) b means:

   Minimum value of the frame delay accepted by the LT is (256 x 16/*fc*) x 2^{14} (~4949 ms).

d) The UT sends the SEND_UT_APDU(UT_TEST_COMMAND1) to the PCD.

e) The PCD shall send the following $I(0 \text{ or } 1)_0$ block after a minimum delay of 4949 ms.

Scenario H 11 — Start-up Frame Guard Time mechanism

PCD		LT
RATS command frame (e.g. 'E0 01 CRC_A')	→	
	←	ATS, TB (1) = '0E'
Optional PPS request is possible and would be processed by the LT before the I-block	→	
	←	PPS response in case of PPS request
$I(0 \text{ or } 1)_0$ (Sent after SFGT = (256 x 16/*fc*) x 2^{14} (~4949 ms))	→	

© ISO/IEC 2006 – All rights reserved

Copyright International Organization for Standardization
Provided by IHS under license with ISO
No reproduction or networking permitted without license from IHS
Not for Resale

H.2.8.3 Expected result

The PCD command is expected according to the Scenario H 11 for all executions of the method.

H.2.8.4 Test report

Fill the appropriate row in “Table H.6 — Reported Results for type A specific test methods” according to the test results as follows:

Explanation	Test result
If the PCD’s behaviour matches the expected Test Scenario exactly	Pass
If the PCD fails on at least one step of the Test Scenario	Fail

Figure H.14 — Result criteria for Handling of Start-up Frame Guard Time

H.2.9 Handling of the CID during activation by the PCD

The purpose of this test is to determine the handling of the CID according to ISO/IEC 14443-4:2001, 5.6.3. This test shall be executed for at least CID set to 0, 1 and 14 if the CID can be chosen by the UT. Else, only the CID chosen by the PCD shall be used.

H.2.9.1 Apparatus

See H.1.

H.2.9.2 Procedure

Use the sequence a) to c) to put the PCD into the state required by this test:

a) Place the LT into the PCD operating volume.

b) The UT performs the activation procedure according to H.1.8.1.

c) The LT answers relevant anticollision messages and waits until the PCD sends the RATS. The LT answers with ATS.

For each test from the "Scenario H 12 — Handling of the CID", when supported by the PCD, use the sequence d) to h):

d) Put the PCD into the state required by this test.

e) The LT waits until the PCD applies the command as described in PCD column.

f) The LT answers as described in the LT column.

g) The UT sends the SEND_UT_APDU(UT_TEST_COMMAND1) to the PCD.

h) The PCD is expected to send I-block to the LT applying the condition as described in the PCD column.

--`,,```,,,,````-`-`,,`,,`,`,,`---

© ISO/IEC 2006 – All rights reserved
Copyright International Organization for Standardization
Provided by IHS under license with ISO
No reproduction or networking permitted without license from IHS
Not for Resale

Scenario H 12 — Handling of the CID

Test	PCD		LT
CID=n not equal to 0 and receive CID is supported	RATS (CID not equal 0)	→	
		←	ATS (CID supported)
	any valid command using CID	→	
CID=n not equal to 0 and receive CID is not supported	RATS (CID not equal 0)	→	
		←	ATS (CID not supported)
	any valid command without CID	→	
CID=n equal to 0 and receive CID is supported	RATS (CID equal to 0)	→	
		←	ATS (CID supported)
	any valid command using CID=0 or without CID	→	
CID=n equal to 0 and receive CID is not supported	RATS (CID equal to 0)	→	
		←	ATS (CID not supported)
	any valid command without CID	→	

H.2.9.3 Expected result

The PCD's behaviour shall match the expected Test Scenario H 12 exactly.

H.2.9.4 Test report

Record the presence, the content of the PCD commands.

Fill the appropriate row in "Table H.6 — Reported Results for type A specific test methods" according to the test results as follows:

Explanation	Test result
If the PCD command sequence is as expected	Pass
Any other case	Fail

Figure H.15 — Result criteria for Handling of the CID during activation by the PCD

© ISO/IEC 2006 – All rights reserved
Copyright International Organization for Standardization
Provided by IHS under license with ISO
No reproduction or networking permitted without license from IHS
Not for Resale

H.3 Type B specific test methods

H.3.1 I/O transmission timing

The purpose of this test is to determine the PCD transmission timing according to ISO/IEC 14443-3:2001, 7.1.

H.3.1.1 Apparatus

See H.1.

H.3.1.2 Procedure

Place the LT into the PCD operating volume.

During the following procedure the RF Input/Receive data shall be continuously monitored and verified correct to ISO/IEC 14443-2:2001. All signal transitions (level and timing) as well as the logical content of the communication shall be recorded.

a) The UT performs the activation procedure according to H.1.8.1.

b) Analyse the bit boundaries timing within a character sent by the PCD (see ISO/IEC 14443-3:2001, 7.1.1).

c) Analyse the extra guard time (EGT) between 2 consecutive characters sent by the PCD (see ISO/IEC 14443-3:2001, 7.1.2).

d) Analyse the timing of SOF sent by the PCD (see ISO/IEC 14443-3:2001, 7.1.4).

e) Analyse the timing of EOF sent by the PCD (see ISO/IEC 14443-3:2001, 7.1.5).

f) Analyse the timing before the PCD SOF (see ISO/IEC 14443-3:2001, 7.1.7).

H.3.1.3 Test report

Fill “Table H.5 — Type B Specific Timing table” with measured values from b) up to f) and appropriate row in Table H.7 — Reported Results for type B specific tests methods.

H.3.2 Frame size selection mechanism

The purpose of this test is to analyse the frame size selection mechanism according to ISO/IEC 14443-3:2001, 7.9.

This test shall be executed for at least Maximum Frame Size Code set to 0, 1 and 8.

H.3.2.1 Apparatus

See H.1.

H.3.2.2 Procedure

Place the LT into the PCD operating volume.

Use the following sequence:

a) The UT performs the activation procedure according to H.1.8.1.

b) The LT waits until the PCD sends a valid REQB/WUPB Command frame.

© ISO/IEC 2006 – All rights reserved
Copyright International Organization for Standardization
Provided by IHS under license with ISO
No reproduction or networking permitted without license from IHS
Not for Resale

c) The LT answers with ATQB. Assume, that PUPI of the LT is ’12 23 34 45’ and the LT supports CID. For the purpose of this test the LT returns the second protocol info byte equal '01' (see ISO/IEC 14443-3:2001, 7.9.4), which means that maximum frame size supported by the LT is 16 bytes and the LT is compliant with ISO/IEC 14443-4.

d) The PCD shall send a valid ATTRIB Command frame.

e) The LT sends Answer to ATTRIB command.

f) The PCD shall return the result code of its action to the UT.

g) The UT sends the SEND_UT_APDU(UT_TEST_COMMAND2) to the PCD.

h) The PCD shall send the following $I(1)_0$ block using less than or equal to 16 bytes length block.

Scenario H 13 — Frame size selection mechanism

PCD		LT
REQB/WUPB	→	
	←	ATQB
ATTRIB command frame	→	
	←	Answer to ATTRIB command
I(1)0 (INF = the first chain includes the first block of UT_TEST_COMMAND2, with maximum length 16 bytes)	→	

H.3.2.3 Expected result

The PCD command is expected according to the Scenario H 13.

H.3.2.4 Test report

Fill the appropriate row in “Table H.7 — Reported Results for type B specific tests methods” according to the test results as follows:

Explanation	Test result
If the PCD’s behaviour matches the expected Test Scenario exactly for at least Maximum Frame Size Code set to 0, 1 and 8	Pass
If the PCD fails on at least one step of the Test Scenario	Fail

Figure H.16 — Result criteria for Frame size selection mechanism

--`,,```,,,,````-`-`,,`,,`,`,,`---

© ISO/IEC 2006 – All rights reserved
Copyright International Organization for Standardization
Provided by IHS under license with ISO
No reproduction or networking permitted without license from IHS
Not for Resale

H.3.3 Handling of the CID during activation by the PCD

The purpose of this test is to determine the handling of the CID according to ISO/IEC 14443-3:2001.

This test shall be executed for at least CID set to 0, 1 and 14 if the CID can be chosen by the UT. Else, only the CID chosen by the PCD shall be used.

H.3.3.1 Apparatus

See H.1.

H.3.3.2 Procedure

Place the LT into the PCD operating volume.

H.3.3.2.1 Procedure 1

Use the following sequence:

a) The UT performs the activation procedure according to H.1.8.1.

b) The LT waits until the PCD sends the REQB/WUPB command.

c) The LT sends ATQB with Frame Option bits (b2,b1) equal (00)b. It means: CID and NAD are not supported.

d) The LT waits until the PCD sends the ATTRIB command. The PCD shall send a valid ATTRIB Command frame with PARAM4 byte equals 0.

e) The LT sends Answer to ATTRIB command with CID value equals 0.

f) The PCD shall return the result code of its action to the UT.

g) The UT sends the SEND_UT_APDU(UT_TEST_COMMAND1) to the PCD.

h) The PCD shall send the following I(0 or 1)$_0$ block without NAD and CID.

Scenario H 14 — Handling of the CID, Procedure 1

PCD		LT
REQB/WUPB	→	
	←	ATQB Frame Option Bits (b2,b1) are (00)b
ATTRIB command frame: (e.g.'1D 12 23 34 45 00 05 01 00 CRC_B')	→	
	←	Answer to ATTRIB command
I(0 or 1)$_0$ without NAD and CID	→	

H.3.3.2.1.1 Expected result

The PCD's behaviour shall match the expected Test Scenario H 14 exactly.

© ISO/IEC 2006 – All rights reserved
Copyright International Organization for Standardization
Provided by IHS under license with ISO
No reproduction or networking permitted without license from IHS
Not for Resale

H.3.3.2.1.2 Test report

Fill the appropriate row in “Table H.7 — Reported Results for type B specific tests methods” according to the test results as follows:

Explanation	Test result
If the PCD command sequence is as expected	Pass
Any other case	Fail

Figure H.17 — Result criteria for Handling of the CID during activation by the PCD Procedure 1

H.3.3.2.2 Procedure 2

Use the following sequence:

a) The UT performs the activation procedure according to H.1.8.1.

b) The LT waits until the PCD sends the REQB/WUPB command.

c) The LT sends ATQB with Frame Option bits (b2,b1) equal (01)b. It means: CID is supported and NAD is not supported.

d) The LT waits until the PCD sends the ATTRIB command. The PCD shall send a valid ATTRIB Command frame, using PARAM4 byte equals '0X' (CID = X in the range from 0 to 14).

e) The LT sends Answer to ATTRIB command with CID value assigned by the PCD on step d) in PARAM4 byte.

f) The PCD shall return the result code of its action to the UT.

g) The UT sends the SEND_UT_APDU(UT_TEST_COMMAND1) to the PCD.

h) The PCD shall send the following I(0 or 1)$_0$ block using CID value assigned by the PCD on step d) or, optionally, using no CID if CID=0. The PCD shall not use NAD in this I(0 or 1)$_0$ block.

Scenario H 15 — Handling of the CID, Procedure 2

PCD		LT
REQB/WUPB	→	
	←	ATQB Frame Option Bits (b2,b1) =(01)b
ATTRIB command frame with, (e.g., PARAM4 = '0X'): (e.g.'1D 12 23 34 45 00 05 01 0X CRC_B’), X in the range from 0 to 14.	→	
	←	Answer to ATTRIB command
I(0 or 1)$_0$ with CID value equals '0X' and without NAD	→	

--`,,```,,,,````-`-`,,`,,`,`,,`---
© ISO/IEC 2006 – All rights reserved
Copyright International Organization for Standardization
Provided by IHS under license with ISO
No reproduction or networking permitted without license from IHS
Not for Resale

H.3.3.2.2.1 Expected result

The PCD's behaviour shall match the expected Test Scenario H 15 exactly.

H.3.3.2.2.2 Test report

Fill the appropriate row in "Table H.7 — Reported Results for type B specific tests methods" according to the test results as follows:

Explanation	Test result
If the PCD command sequence is as expected	Pass
Any other case	Fail

Figure H.18 — Result criteria for Handling of the CID during activation by the PCD Procedure 2

H.4 Test method for logical operations of the PCD

All test methods described in this clause, except H.4.1, shall be applied twice, once for type A signal interface and once for type B signal interface.

H.4.1 Handling of the polling loop

The purpose of this test is to determine the behaviour of the PCD during polling.

H.4.1.1 Apparatus

See H.1.

H.4.1.2 Procedure

Place the LT into the PCD operating volume.

During the following procedure the RF Input/Receive data shall be continuously monitored and verified correct to ISO/IEC 14443-2:2001. All signal transitions (level and timing) as well as the logical content of the communication shall be recorded.

Use the following sequence:

a) The UT performs the protocol activation procedure according to H.1.8.1.

b) The LT waits until the PCD sends a valid REQA/WUPA Command frame and a valid REQB/WUPB Command frame, in any order and repetition.

H.4.1.3 Expected result

The time between the end of REQA/WUPA (or the last REQA/WUPA of a series) and the beginning of REQB/WUPB (or the last REQB/WUPB of a series) shall be at least 5 ms.

The time between the end of REQB/WUPB (or the last REQB/WUPB of a series) and the beginning of REQA/WUPA (or the last REQA/WUPA of a series) shall be at least 5 ms.

© ISO/IEC 2006 – All rights reserved
Copyright International Organization for Standardization
Provided by IHS under license with ISO
No reproduction or networking permitted without license from IHS
Not for Resale

H.4.1.4 Test report

Fill the appropriate row in “Table H.8 — Reported Results for tests methods” according to the test results both for type A and type B as follows:

Explanation	Test result
If the PCD sends at least once REQA/WUPA and at least once REQB/WUPB command frames (at least 5 ms between each type).	Pass
In any other case	Fail

Figure H.19 — Result criteria for Handling of the polling loop

H.4.2 Reaction of the PCD to request for waiting time extension

The purpose of this test is to determine the behaviour of the PCD when the PICC uses a request for a waiting time extension (see ISO/IEC 14443-4:2001, 7.3). The mechanism of maintenance of WTX by the PCD is tested too.

This test shall be executed for at least FWI set to 0, 1 and 14 with TR0 and TR1 set to designate the default value in the LT, if it emulates a Type B PICC.

This test shall be executed for at least WTXM set to 1, 3 and 59.

H.4.2.1 Apparatus

See H.1.

H.4.2.2 Procedure

Place the LT into the PCD operating volume.

During the following procedure the RF Input/Receive data shall be continuously monitored and verified correct to ISO/IEC 14443-2:2001. All signal transitions (level and timing) as well as the logical content of the communication shall be recorded.

The UT performs the protocol activation procedure according to H.1.8.2 for type A or H.1.8.3 for type B.

H.4.2.2.1 Procedure 1 (ISO/IEC 14443-4:2001, 7.3)

Use the following sequence immediately after procedure H.4.2.2:

a) The UT sends the SEND_UT_APDU(UT_TEST_COMMAND1) to the PCD.

b) The LT waits until the PCD sends block $I(0)_0$ to the LT, with the INF field containing the UT_TEST_COMMAND1.

c) The LT sends S(WTX) request for a waiting time extension.

d) The PCD shall send S(WTX) response with INF(b6 to b1)=WTXM used.

© ISO/IEC 2006 – All rights reserved
Copyright International Organization for Standardization
Provided by IHS under license with ISO
No reproduction or networking permitted without license from IHS
Not for Resale

Scenario H 16 —The PCD reaction to the LT waiting time extension request, procedure 1

PCD		LT
$I(0)_0$ (INF=UT_TEST_COMMAND1)	→	
	←	S(WTX) request (WTXM belongs to the test set)
S(WTX) response	→	

H.4.2.2.1.1 Expected result

The PCD command is expected according to the Scenario H 16 for all FWI and WTXM values defined in H.4.2 in all combinations. The test shall only pass if all tests with different WTX values passed.

H.4.2.2.1.2 Test report

Fill the appropriate row in “Table H.8 — Reported Results for tests methods” according to the test results both for type A and type B as follows:

Explanation	Test result
If the PCD sends S(WTX) response with INF(b6 to b1) = WTXM	Pass
In any other case	Fail

Figure H.20 — Result criteria for Reaction of the PCD to request for waiting time extension Procedure 1 (ISO/IEC 14443-4:2001, 7.3)

H.4.2.2.2 Procedure 2 (ISO/IEC 14443-4:2001, 7.3)

Use the following sequence immediately after procedure H.4.2.2:

a) The UT sends the SEND_UT_APDU(UT_TEST_COMMAND1) to the PCD.

b) The LT waits until the PCD sends an I-block to the LT with the INF field containing the UT_TEST_COMMAND1.

c) The LT sends S(WTX) request.

d) The PCD shall send S(WTX) response with INF(b6 to b1)=WTXM. If it does not meet the expected response, end the test at this point.

© ISO/IEC 2006 – All rights reserved
Copyright International Organization for Standardization
Provided by IHS under license with ISO
No reproduction or networking permitted without license from IHS
Not for Resale

e) Set the following bit-timing-parameters at the LT:

Parameter	Value	Reference
Frame response time	WTXM * (256*16/fc)*2 ^{FWI}	ISO/IEC 14443-3:2001, 7.9.4.3 ISO/IEC 14443-4:2001, 7.2 and 7.3
Delay between two consecutive characters if type B communication	Maximum (19 µs)	ISO/IEC 14443-3:2001, 7.1.2
NOTE The Frame response time is defined as the time between the trailing edge of the EOF of the frame received and the leading edge of the SOF of the next frame sent.		

f) The LT sends the answer to the command UT_TEST_COMMAND1, sent in b).

g) The PCD is expected to transfer the response UT_APDU (answer to the command UT_TEST_COMMAND1) back to the UT.

h) The UT sends the SEND_UT_APDU(UT_TEST_COMMAND1) to the PCD.

i) The LT waits until the PCD sends an I-block to the LT with the INF field containing the UT_TEST_COMMAND1. The PCD shall reset the FWT at this point.

j) The LT remains mute for at least the expected FWT. This fact means FWT timeout for the PCD.

k) Record the presence, the content and timing of the PCD-response. The PCD shall send a R(NAK) block only after FWT expires (ISO/IEC 14443-4:2001, 7.5.4.2).

l) Measure and record the time between the end of the PCD frame from step i) and start of PCD frame from step k).

Scenario H 17 —PCD reaction to the LT waiting time extension request, procedure 2

PCD		LT
$I(0)_0$ (INF = UT_TEST_COMMAND1)	→	
	←	S(WTX) request (WTXM belongs to the test set)
S(WTX) response	→	
	←	$I(0)_0$ (INF = answer to UT_TEST_COMMAND1)
$I(0)_1$ (INF = UT_TEST_COMMAND1)	→	
	←	Mute
R(NAK)	→	

H.4.2.2.2.1 Expected result

The PCD command is expected according to the Scenario H 17 for all FWI and WTXM values defined in, H.4.2 in all combinations. The test shall only pass if all tests with these different values passed.

© ISO/IEC 2006 – All rights reserved
Copyright International Organization for Standardization
Provided by IHS under license with ISO
No reproduction or networking permitted without license from IHS
Not for Resale

H.4.2.2.2.2 Test report

Fill the appropriate row in “Table H.8 — Reported Results for tests methods” according to the test results both for type A and type B as follows:

Explanation	Test result
If the answer to TEST_COMMAND_1 was not sent back to the UT or if the PCD sent the R(NAK) before FWT expired	Fail
In any other case	Pass

Figure H.21 — Result criteria for Reaction of the PCD to request for waiting time extension Procedure 2 (ISO/IEC 14443-4:2001, 7.3)

H.4.3 Error detection and recovery of a transmission error

The purpose of this test is to determine the behaviour of PCD when a transmission error occurs according to ISO/IEC 14443-4:2001, 7.5.5.

NOTE In this section, "Erroneous block" is a frame with a bad CRC.

H.4.3.1 Apparatus

See H.1.

H.4.3.2 Procedure

Place the LT into the PCD operating volume.

During the following procedure the RF Input/Receive data shall be continuously monitored and verified correct to ISO/IEC 14443-2:2001. All signal transitions (level and timing) as well as the logical content of the communication shall be recorded.

The UT performs the protocol activation procedure according to H.1.8.2 for type A or H.1.8.3 for type B.

H.4.3.2.1 Procedure 1 (ISO/IEC 14443-4:2001, Informative Annex B, Scenario 8)

Use the following sequence immediately after procedure H.4.3.2:

a) The UT sends the SEND_UT_APDU(UT_TEST_COMMAND1) to the PCD.

b) The LT waits until the PCD sends an I-block to the LT with the INF field containing the UT_TEST_COMMAND1.

c) The LT sends an erroneous I-block to the PCD.

d) The PCD shall send $R(NAK)_0$.

e) The LT sends I-block (containing some response UT_APDU with answer to the UT_TEST_COMMAND1) to the PCD.

f) The PCD is expected to transfer the response UT_APDU back to the UT. Check at the UT that this response UT_APDU block is correctly accepted.

© ISO/IEC 2006 – All rights reserved
Copyright International Organization for Standardization
Provided by IHS under license with ISO
No reproduction or networking permitted without license from IHS
Not for Resale

Scenario H 18 — Recovery of a transmission error by the PCD (ISO/IEC 14443-4:2001, Informative Annex B, Scenario 8), procedure 1

PCD		LT
$I(0)_0$(INF=UT_TEST_COMMAND1)	→	
	←	$I(0)_0$ (INF = answer to UT_TEST_COMMAND1, wrong CRC)
$R(NAK)_0$ ('BA CID CRC' or 'B2 CRC')	→	
	←	$I(0)_0$ (INF=answer to UT_TEST_COMMAND1)

H.4.3.2.1.1 Expected result

The PCD's behaviour shall match the expected Test Scenario H 18 exactly.

H.4.3.2.1.2 Test report

Fill the appropriate row in "Table H.8 — Reported Results for tests methods" according to the test results both for type A and type B as follows:

Explanation	Test result
If the PCD's behaviour matches the expected Test Scenario exactly	Pass
If the PCD fails on at least one step of the Test Scenario	Fail

Figure H.22 — Result criteria for Error detection and recovery of a transmission error Procedure 1 (ISO/IEC 14443-4:2001, Informative Annex B, Scenario 8)

H.4.3.2.2 Procedure 2 (ISO/IEC 14443-4:2001, 7.5.4.2 rule 4)

Use the following sequence immediately after procedure H.4.3.2:

a) The UT sends the SEND_UT_APDU(UT_TEST_COMMAND1) to the PCD.

b) The LT waits until the PCD sends an I-block to the LT with the INF field containing the UT_TEST_COMMAND1.

c) The LT sends an erroneous block to the PCD.

d) The PCD shall send $R(NAK)_0$.

e) The LT sends a second invalid block to the PCD.

f) The PCD shall send either $R(NAK)_0$ or S(DESELECT) request.

© ISO/IEC 2006 – All rights reserved

Copyright International Organization for Standardization
Provided by IHS under license with ISO
No reproduction or networking permitted without license from IHS
Not for Resale

Scenario H 19 — Recovery of a transmission error by the PCD, Procedure 2

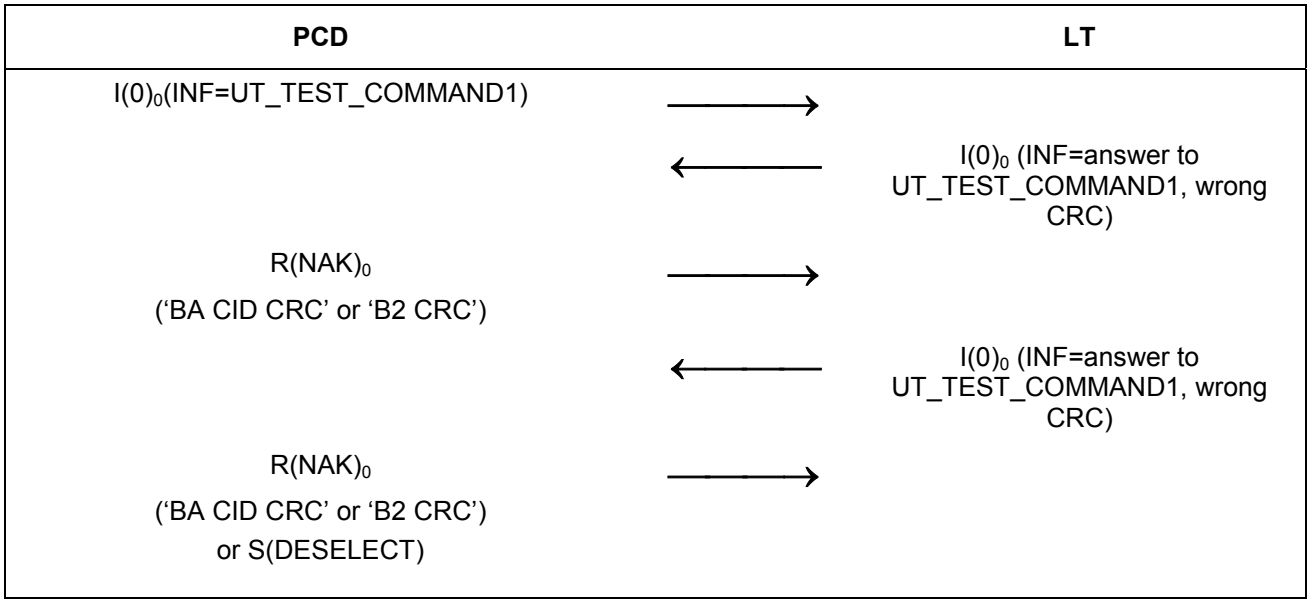

H.4.3.2.2.1 Expected result

The PCD's behaviour shall match the expected Test Scenario H 19.

H.4.3.2.2.2 Test report

Fill the appropriate row in "Table H.8 — Reported Results for tests methods" according to the test results both for type A and type B as follows:

Explanation	Test result
If the PCD sends either $R(NAK)_0$ or S(DESELECT) request	Pass
In any other case	Fail

Figure H.23 — Result criteria for Error detection and recovery of a transmission error Procedure 2 (ISO/IEC 14443-4:2001, 7.5.4.2 rule 4)

H.4.3.2.3 Procedure 3 (ISO/IEC 14443-4:2001, 7.5.4.2 rule 4)

Use the following sequence immediately after procedure H.4.3.2:

a) The UT sends the SEND_UT_APDU(UT_TEST_COMMAND1) to the PCD.

b) The LT waits until the PCD sends an I-block to the LT with the INF field containing the UT_TEST_COMMAND1.

c) Maintain the LT mute.

d) Record all responses from the PCD during at least three consecutive FWT periods. The PCD shall send $R(NAK)_0$ at least once.

© ISO/IEC 2006 – All rights reserved
Copyright International Organization for Standardization
Provided by IHS under license with ISO
No reproduction or networking permitted without license from IHS
Not for Resale

Scenario H 20 — Recovery of a transmission error by the PCD, Procedure 3

PCD		LT
$I(0)_0$ (INF=UT_TEST_COMMAND1)	→	
	←	Mute
$R(NAK)_0$ ('BA CID CRC' or 'B2 CRC')	→	
	←	Mute
$R(NAK)_0$ ('BA CID CRC' or 'B2 CRC') or S(DESELECT)	→	

H.4.3.2.3.1 Expected result

The PCD command is expected according to the Scenario H 20.

H.4.3.2.3.2 Test report

Fill the appropriate row in "Table H.8 — Reported Results for tests methods" according to the test results both for type A and type B as follows:

Explanation	Test result
If the PCD sends $R(NAK)_0$ at least once	Pass
In any other case	Fail

Figure H.24 — Result criteria for Error detection and recovery of a transmission error Procedure 3 (ISO/IEC 14443-4:2001, 7.5.4.2 rule 4)

H.4.3.2.4 Procedure 4 (ISO/IEC 14443-4:2001, 7.5.4.2 rule 7)

Use the following sequence immediately after procedure H.4.3.2:

a) The UT sends the SEND_UT_APDU(UT_TEST_COMMAND1) to the PCD.

b) The LT waits until the PCD sends an I-block to the LT with the INF field containing the UT_TEST_COMMAND1.

c) The LT sends $R(ACK)_0$ (because of infringement of protocol rules by the LT).

d) The PCD shall send an S(DESELECT) request.

--`,,```,,,,````-`-`,,`,,`,`,,`---
© ISO/IEC 2006 – All rights reserved
Copyright International Organization for Standardization
Provided by IHS under license with ISO
No reproduction or networking permitted without license from IHS
Not for Resale

Scenario H 21 — Recovery of a protocol error by the PCD, Procedure 5

PCD		LT
$I(0)_0$ (INF=UT_TEST_COMMAND1)	→	
	←	$R(ACK)_0$ ('AA CID CRC' or 'A2 CRC') [a]
S(DESELECT) request	→	

[a] If the PCD block contains a CID, the left option shall be used, else the right option shall be used.

H.4.3.2.4.1 Expected result

The PCD command is expected according to the Scenario H 21.

H.4.3.2.4.2 Test report

Fill the appropriate row in "Table H.8 — Reported Results for tests methods" according to the test results both for type A and type B as follows:

Explanation	Test result
If the PCD sends a S(DESELECT) request (since $R(ACK)_0$ is illegal block in this situation)	Pass
In any other case	Fail

Figure H.25 — Result criteria for Error detection and recovery of a transmission error Procedure 4 (ISO/IEC 14443-4:2001, 7.5.4.2 rule 7)

H.4.3.2.5 Procedure 5 (with chaining) (ISO/IEC 14443-4:2001, 7.5.4.2 rule 5, ISO/IEC 14443-4:2001, Informative Annex B, Scenario 19)

Use the following sequence immediately after procedure H.4.3.2:

a) The UT sends the SEND_UT_APDU(UT_TEST_COMMAND1) to the PCD.

b) The LT waits until the PCD sends an I-block to the LT, with the INF field containing the UT_TEST_COMMAND1.

c) The LT sends the first block $I(1)_0$ of the chain and waits for the PCD response.

d) The PCD shall send $R(ACK)_1$.

e) The LT sends an erroneous block $I(0)_1$ to the PCD.

f) The PCD shall send $R(ACK)_1$.

© ISO/IEC 2006 – All rights reserved
Copyright International Organization for Standardization
Provided by IHS under license with ISO
No reproduction or networking permitted without license from IHS
Not for Resale

Scenario H 22 — Recovery of a transmission error by the PCD, Procedure 6 (ISO/IEC 14443-4:2001, Informative Annex B, Scenario 19)

PCD		LT
$I(0)_0$ (INF=UT_TEST_COMMAND1)	→	
	←	$I(1)_0$ (INF=the first chain of the answer to UT_TEST_COMMAND1)
$R(ACK)_1$ ('AB CID CRC' or 'A3 CRC')	→	
	←	$I(0)_1$ (INF=the last chain of the answer to UT_TEST_COMMAND1, wrong CRC)
$R(ACK)_1$	→	

H.4.3.2.5.1 Expected result

The PCD command is expected according to the Scenario H 22.

H.4.3.2.5.2 Test report

Fill the appropriate row in "Table H.8 — Reported Results for tests methods" according to the test results both for type A and type B as follows:

Explanation	Test result
If the PCD sends $R(ACK)_1$	Pass
In any other case	Fail

Figure H.26 — Result criteria for Error detection and recovery of a transmission error Procedure 5 (with chaining) (ISO/IEC 14443-4:2001, 7.5.4.2 rule 5, ISO/IEC 14443-4:2001, Informative Annex B, Scenario 19)

H.4.3.2.6 Procedure 6 (ISO/IEC 14443-4:2001, 7.5.4.2)

Use the following sequence immediately after procedure H.4.3.2:

a) The UT sends the SEND_UT_APDU(UT_TEST_COMMAND1) to the PCD.

b) The LT waits until the PCD sends an I-block to the LT with the INF field containing the UT_TEST_COMMAND1.

c) The LT sends an erroneous block to the PCD.

d) The PCD shall send $R(NAK)_0$.

e) The LT remains mute.

f) Record all responses from the PCD during at least three consecutive FWT periods. The PCD shall send either $R(NAK)_0$ or S(DESELECT).

© ISO/IEC 2006 – All rights reserved

Copyright International Organization for Standardization
Provided by IHS under license with ISO
No reproduction or networking permitted without license from IHS
Not for Resale

Scenario H 23 — Recovery of a transmission error by the PCD, Procedure 8

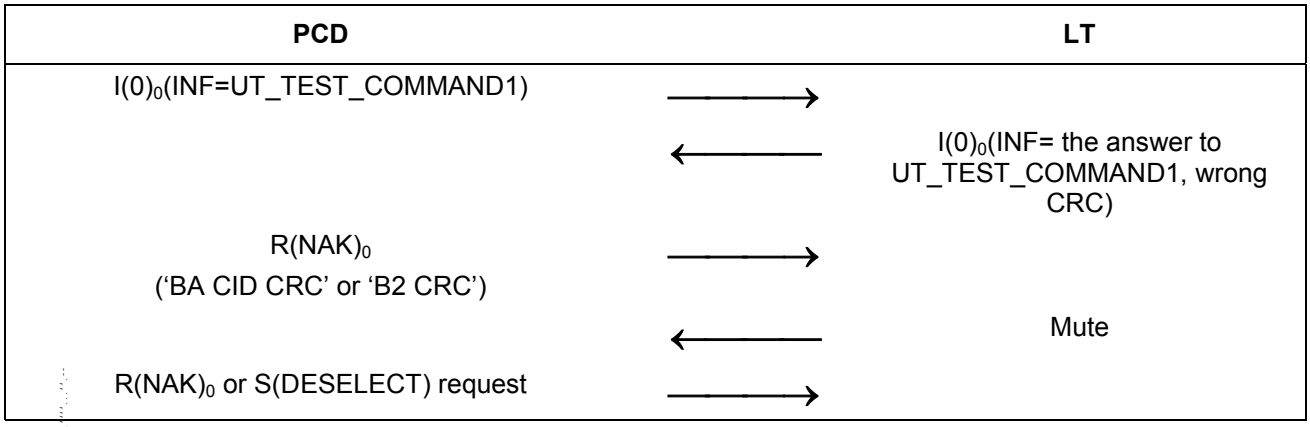

H.4.3.2.6.1 Expected result

The PCD command is expected according to the Scenario H 23.

H.4.3.2.6.2 Test report

Fill the appropriate row in "Table H.8 — Reported Results for tests methods" according to the test results both for type A and type B as follows:

Explanation	Test result
If the PCD either sends $R(NAK)_0$ or S(DESELECT) request	Pass
In any other case	Fail

Figure H.27 — Result criteria for Error detection and recovery of a transmission error Procedure 6 (ISO/IEC 14443-4:2001, 7.5.4.2)

H.4.3.2.7 Procedure 7 (ISO/IEC 14443-4:2001, 7.5.5, Informative Annex B, Scenario 10)

Use the following sequence immediately after procedure H.4.3.2:

a) The UT sends the SEND_UT_APDU(UT_TEST_COMMAND1) to the PCD.

b) The LT waits until the PCD sends an I-block to the LT with the INF field containing the UT_TEST_COMMAND1.

c) The LT sends a erroneous S(WTX) request block.

d) The PCD shall send $R(NAK)_0$.

e) The LT sends a valid S(WTX) request block.

f) The PCD shall answer with S(WTX) response.

g) The LT sends I-block (containing some response UT_APDU with answer to the UT_TEST_COMMAND1) to the PCD.

h) The PCD is expected to transfer this response UT_APDU back to the UT. Check at the UT that this response UT_APDU block is correctly accepted.

© ISO/IEC 2006 – All rights reserved
Copyright International Organization for Standardization
Provided by IHS under license with ISO
No reproduction or networking permitted without license from IHS
Not for Resale

Scenario H 24 — Recovery of a transmission error by the PCD, Procedure 9 (ISO/IEC 14443-4:2001, Informative Annex B, Scenario 10)

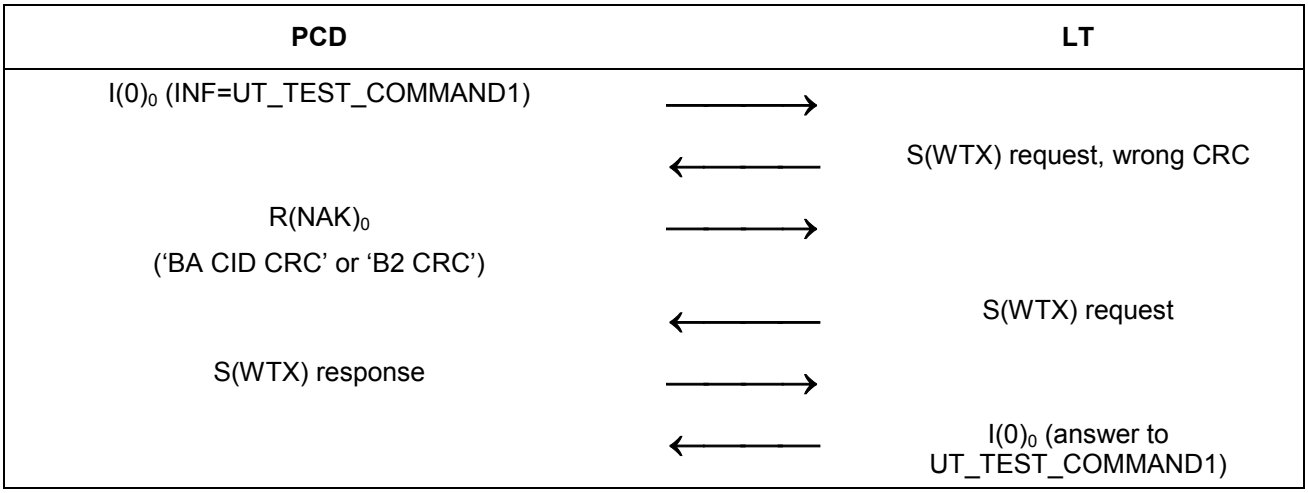

H.4.3.2.7.1 Expected result

The PCD's behaviour shall match the expected Test Scenario H 24 exactly.

H.4.3.2.7.2 Test report

Fill the appropriate row in "Table H.8 — Reported Results for tests methods" according to the test results both for type A and type B as follows:

Explanation	Test result
If the PCD's behaviour matches the expected Test Scenario exactly	Pass
If the PCD fails on at least one step of the Test Scenario	Fail

Figure H.28 — Result criteria for Error detection and recovery of a transmission error Procedure 7 (ISO/IEC 14443-4:2001, 7.5.5, Informative Annex B, Scenario 10)

H.4.3.2.8 Procedure 8 (ISO/IEC 14443-4:2001, 7.5.5, Informative Annex B, Scenario 13)

Use the following sequence immediately after procedure H.4.3.2:

a) The UT sends the SEND_UT_APDU(UT_TEST_COMMAND1) to the PCD.

b) The LT waits until the PCD sends an I-block to the LT with the INF field containing the UT_TEST_COMMAND1.

c) The LT sends a S(WTX) request block.

d) The PCD shall answer with S(WTX) response.

e) The LT sends an erroneous $I(0)_0$ block.

© ISO/IEC 2006 – All rights reserved

Copyright International Organization for Standardization
Provided by IHS under license with ISO
No reproduction or networking permitted without license from IHS
Not for Resale

f) The PCD shall send $R(NAK)_0$.

g) The LT sends a valid $I(0)_0$ block with maximum timing between $R(NAK)_0$ and $I(0)_0$ to check that the PCD FWT is still extended.

h) The PCD is expected to transfer this response UT_APDU back to the UT. Check at the UT that this response UT_APDU block is correctly accepted.

Scenario H 25 — Recovery of a transmission error by the PCD, Procedure 10 (ISO/IEC 14443-4:2001, Informative Annex B, Scenario 13)

PCD		LT
$I(0)_0$ (INF=UT_TEST_COMMAND1)	→	
	←	S(WTX) request
S(WTX) response	→	
	←	$I(0)_0$ (INF=answer to UT_TEST_COMMAND1, wrong CRC)
$R(NAK)_0$ ('BA CID CRC' or 'B2 CRC')	→	
	←	$I(0)_0$ (INF=answer to UT_TEST_COMMAND1)

H.4.3.2.8.1 Expected result

The PCD's behaviour shall match the expected Test Scenario H 25 exactly.

H.4.3.2.8.2 Test report

Fill the appropriate row in "Table H.8 — Reported Results for tests methods" according to the test results both for type A and type B as follows:

Explanation	Test result
If the PCD's behaviour matches the expected Test Scenario exactly	Pass
If the PCD fails on at least one step of the Test Scenario	Fail

Figure H.29 — Result criteria for Error detection and recovery of a transmission error Procedure 8 (ISO/IEC 14443-4:2001, 7.5.5, Informative Annex B, Scenario 13)

© ISO/IEC 2006 – All rights reserved
Copyright International Organization for Standardization
Provided by IHS under license with ISO
No reproduction or networking permitted without license from IHS
Not for Resale

H.4.3.2.9 Procedure 9 (with chaining) (see ISO/IEC 14443-4:2001, Informative Annex B, Scenario 16)

Use the following sequence immediately after procedure H.4.3.2:

a) The UT sends the SEND_UT_APDU(UT_TEST_COMMAND2(causing 3 chains)) to the PCD.

b) The LT waits until the PCD sends an I-block $I(1)_0$ to the LT, with the INF field the first chain of the UT_TEST_COMMAND2.

c) The LT sends an erroneous $R(ACK)_0$.

d) The PCD shall send $R(NAK)_0$.

e) The LT sends $R(ACK)_0$.

f) The PCD shall send the next block $I(1)_1$ of the chain.

g) The LT sends $R(ACK)_1$.

h) The PCD shall send the last block $I(0)_0$ of the chain .

i) The LT sends I-block (containing some response UT_APDU with answer to the UT_TEST_COMMAND2) to the PCD.

j) The PCD is expected to transfer this response UT_APDU back to the UT. Check at the UT that this response UT_APDU block is correctly accepted.

NOTE In case the number of chains cannot be controlled exactly, modify the expected procedure to reflect the test purpose which is to make sure that the block numbering and the chaining are properly executed after transmission error at step c).

Scenario H 26 — Recovery of a transmission error by the PCD, Procedure 11 (with chaining) (ISO/IEC 14443-4:2001, Informative Annex B, Scenario 16)

PCD		LT
$I(1)_0$ (INF = the first chain of the UT_TEST_COMMAND2)	→	
	←	$R(ACK)_0$, wrong CRC ('AA CID 00 00' or 'A2 00 00') [a]
$R(NAK)_0$ ('BA CID CRC' or 'B2 CRC')	→	
	←	$R(ACK)_0$ ('AA CID CRC' or 'A2 CRC') [a]
$I(1)_1$ (INF = the second chain of the UT_TEST_COMMAND2)	→	
	←	$R(ACK)_1$ ('AB CID CRC' or 'A2 CRC') [a]
$I(0)_0$ (INF = the last chain of the UT_TEST_COMMAND2)	→	
	←	$I(0)_0$ (INF=the answer to UT_TEST_COMMAND2)

[a] If the PCD frame contains a CID, the left option shall be used, else the right option shall be used.

© ISO/IEC 2006 – All rights reserved

Copyright International Organization for Standardization
Provided by IHS under license with ISO
No reproduction or networking permitted without license from IHS
Not for Resale

H.4.3.2.9.1 Expected result

The PCD's behaviour shall be in accordance with Scenario H 26.

H.4.3.2.9.2 Test report

Fill the appropriate row in "Table H.8 — Reported Results for tests methods" according to the test results both for type A and type B as follows:

Explanation	Test result
If the PCD's behaviour matches the expected Test Scenario	Pass
If the PCD fails on at least one step of the Test Scenario	Fail

Figure H.30 — Result criteria for Error detection and recovery of a transmission error Procedure 9 (with chaining) (see ISO/IEC 14443-4:2001, Informative Annex B, Scenario 16)

H.4.3.2.10 Procedure 10 (with chaining) (see ISO/IEC 14443-4:2001, Informative Annex B, Scenario 17)

Use the following sequence immediately after procedure H.4.3.2:

a) The UT sends the SEND_UT_APDU(UT_TEST_COMMAND2(causing 3 chains)) to the PCD.

b) The LT waits until the PCD sends an I-block $I(1)_0$ to the LT, with the INF field the first chain of the UT_TEST_COMMAND2.

c) The LT stays Mute.

d) The PCD shall send $R(NAK)_0$.

e) The LT sends a R-block with a not synchronized sequential block number $R(ACK)_1$.

f) The PCD shall repeat the previous I-block $I(1)_0$ to the LT .

g) The LT sends $R(ACK)_0$.

h) The PCD shall send the next block $I(1)_1$ of the chain.

i) The LT sends $R(ACK)_1$.

j) The PCD shall send the last block $I(0)_0$ of the chain.

k) The LT sends I-block (containing some response UT_APDU with answer to the UT_TEST_COMMAND2) to the PCD.

l) The PCD is expected to transfer this response UT_APDU back to the UT. Check at the UT that this response UT_APDU block is correctly accepted.

NOTE In case the number of chains cannot be controlled exactly, modify the expected procedure to reflect the test purpose which is to make sure that the block numbering and the chaining are properly executed after mute at step c).

© ISO/IEC 2006 – All rights reserved
Copyright International Organization for Standardization
Provided by IHS under license with ISO
No reproduction or networking permitted without license from IHS
Not for Resale

Scenario H 27 — Recovery of a transmission error by the PCD, Procedure 10 (with chaining) (see ISO/IEC 14443-4:2001, Informative Annex B, Scenario 17)

PCD		LT
$I(1)_0$ (INF = the first chain of the UT_TEST_COMMAND2)	→	
	←	Mute
$R(NAK)_0$ ('BA CID CRC' or 'B2 CRC')	→	
	←	$R(ACK)_1$ ('AA CID CRC' or 'A2 CRC') [a]
$I(1)_0$ (INF = the first chain of the UT_TEST_COMMAND2)	→	
	←	$R(ACK)_0$ ('AB CID CRC' or 'A2 CRC') [a]
$I(1)_1$ (INF = the second chain of the UT_TEST_COMMAND2)	→	
	←	$R(ACK)_1$ ('AB CID CRC' or 'A2 CRC') [a]
$I(0)_0$ (INF = the last chain of the UT_TEST_COMMAND2)	→	
	←	$I(0)_0$ (INF=the answer to UT_TEST_COMMAND2)

[a] If the PCD block contains a CID, the left option shall be used, else the right option shall be used.

H.4.3.2.10.1 Expected result

The PCD's behaviour shall match the expected Test Scenario H 27 exactly.

H.4.3.2.10.2 Test report

Fill the appropriate row in "Table H.8 — Reported Results for tests methods" according to the test results both for type A and type B as follows:

Explanation	Test result
If the PCD's behaviour matches the expected Test Scenario exactly	Pass
If the PCD fails on at least one step of the Test Scenario	Fail

Figure H.31 — Result criteria for Error detection and recovery of a transmission error Procedure 10 (with chaining) (see ISO/IEC 14443-4:2001, Informative Annex B, Scenario 17)

© ISO/IEC 2006 – All rights reserved
Copyright International Organization for Standardization
Provided by IHS under license with ISO
No reproduction or networking permitted without license from IHS
Not for Resale

H.4.3.2.11 Procedure 11 (with chaining) (see ISO/IEC 14443-4:2001, Informative Annex B, Scenario 20)

Use the following sequence immediately after procedure H.4.3.2:

a) The UT sends the SEND_UT_APDU(UT_TEST_COMMAND1) to the PCD.

b) The LT waits until the PCD sends an I-block $I(0)_0$ to the LT, with the INF field containing the UT_TEST_COMMAND1.

c) The LT sends I-Block $I(1)_0$ indicating chaining.

d) The PCD shall send $R(ACK)_1$.

e) The LT sends erroneous I-block $I(1)_1$ to the PCD.

f) The PCD shall send $R(ACK)_1$.

g) The LT retransmits an I-block $I(1)_1$ without error.

h) The PCD shall send $R(ACK)_0$.

i) The LT sends the last block of the chain in I-Block $I(0)_0$ (of its response UT_APDU with answer to the UT_TEST_COMMAND1) to the PCD.

j) The PCD is expected to transfer the response UT_APDU, containing all chaining segments, back to the UT. Check at the UT that this response UT_APDU block is correctly accepted.

Scenario H 28 — Recovery of a transmission error by the PCD, Procedure 13 (with chaining) (ISO/IEC 14443-4:2001, Informative Annex B, Scenario 20)

PCD		LT
$I(0)_0$ (INF=UT_TEST_COMMAND1)	→	
	←	$I(1)_0$ (INF = the first chain of the answer to UT_TEST_COMMAND1)
$R(ACK)_1$ ('AB CID CRC' or 'A3 CRC')	→	
	←	$I(1)_1$ (INF = the second chain of the answer to UT_TEST_COMMAND1, wrong CRC)
$R(ACK)_1$ ('AB CID CRC' or 'A3 CRC')	→	
	←	$I(1)_1$ (INF = the second chain of the answer to UT_TEST_COMMAND1)
$R(ACK)_0$ ('AA CID CRC' or 'A2 CRC')	→	
	←	$I(0)_0$ (INF = the last chain of the answer to UT_TEST_COMMAND1)

H.4.3.2.11.1 Expected result

The PCD's behaviour shall in accordance with Scenario H 28 exactly.

© ISO/IEC 2006 – All rights reserved
Copyright International Organization for Standardization
Provided by IHS under license with ISO
No reproduction or networking permitted without license from IHS
Not for Resale

H.4.3.2.11.2 Test report

Fill the appropriate row in “Table H.8 — Reported Results for tests methods” according to the test results both for type A and type B as follows:

Explanation	Test result
If the PCD’s behaviour matches the expected Test Scenario exactly	Pass
If the PCD fails on at least one step of the Test Scenario	Fail

Figure H.32 — Result criteria for Error detection and recovery of a transmission error Procedure 11 (with chaining) (see ISO/IEC 14443-4:2001, Informative Annex B, Scenario 20)

H.4.3.2.12 Procedure 12 (ISO/IEC 14443-4:2001, 7.5.4.2 rule 8)

Use the following sequence immediately after procedure H.4.3.2:

a) The UT sends the SEND_UT_APDU(UT_TEST_COMMAND1) to the PCD.

b) The LT waits until the PCD sends an I-block to the LT with the INF field containing the UT_TEST_COMMAND1.

c) The LT remains mute.

d) The LT waits until the PCD sends $R(NAK)_0$ block (R-block may be sent more than once).

e) The LT remains mute.

f) The LT waits until the PCD sends a S(DESELECT) request block to the LT.

g) The LT remains mute.

h) Record the response from the PCD. The PCD may retransmit the S(DESELECT) request block.

--`,,```,,,,````-`-`,,`,,`,`,,`---

© ISO/IEC 2006 – All rights reserved
Copyright International Organization for Standardization
Provided by IHS under license with ISO
No reproduction or networking permitted without license from IHS
Not for Resale

Scenario H 29 — Recovery of a transmission error by the PCD, Procedure 14

PCD		LT
$I(0)_0$(INF=UT_TEST_COMMAND1)	→	
	←	Mute
$R(NAK)_0$ ('BA CID CRC' or 'B2 CRC')	→	
	←	Mute
S(DESELECT) request 'CA CID CRC' or 'C2 CRC'	→	
	←	Mute
PCD response	→	

H.4.3.2.12.1 Expected result

The PCD command is expected according to the Scenario H 29.

H.4.3.2.12.2 Test report

Fill the appropriate row in "Table H.8 — Reported Results for tests methods" according to the test results both for type A and type B as follows:

Explanation	Test result
If the PCD retransmits the S(DESELECT) or ignores the LT	Pass
In any other case	Fail

Figure H.33 — Result criteria for Error detection and recovery of a transmission error Procedure 12 (ISO/IEC 14443-4:2001, 7.5.4.2 rule 8)

H.4.4 Handling of NAD during chaining

The purpose of this test is to ensure that the PCD maintains NAD in the proper way.

H.4.4.1 Apparatus

See H.1.

H.4.4.2 Procedure

During the following procedure the logical content of the communication shall be recorded.

a) Place the LT into the PCD operating volume.

b) Configure the LT as one supporting NAD.

c) Repeat procedure from Scenario H 26.

© ISO/IEC 2006 – All rights reserved
Copyright International Organization for Standardization
Provided by IHS under license with ISO
No reproduction or networking permitted without license from IHS
Not for Resale

H.4.4.3 Expected result

NAD shall only be present in the first packet of chaining if used.

H.4.4.4 Test report

Fill the appropriate rows in “Table H.8 — Reported Results for tests methods” according to the test results both for type A and type B as follows:

Explanation	Test result
If the PCD use the NAD only in the first packet of chaining or does not use NAD.	Pass
In any other case	Fail

Figure H.34 — Result criteria for Handling of NAD during chaining

H.5 Continuous monitoring of packets sent by the PCD

The purpose of this test is to ensure that the PCD does not set any RFU bits in any sent frame to any value other than the default value documented for such RFU bit. Further, the test shall also ensure that no field is ever set to RFU value. The test shall also ensure that the R-Block and the S-Block match the protocol definitions. And that rules given regarding the first byte of the packet are not violated.

H.5.1 RFU fields

RFU fields shall be continuously monitored during the testing and shall always be verified to contain the assigned default value. A test shall fail and the tested PCD declared non-compliant in case an RFU field is not set to its default value at any time.

H.5.2 RFU values

Functional fields shall be continuously monitored during the testing and shall always be verified to contain only functional values documented in the standard or proprietary values documented as such in the standard. A test shall fail and the tested PCD be declared non-compliant in case a functional field is not set to said values at any time.

H.5.3 R-Block

R-Block shall never contain an INF field (see ISO/IEC 14443-4:2001, 7.1.1.1).

H.5.4 S-Block

S-Block shall have an INF field of one byte only when it is a WTX block and no INF field otherwise (see ISO/IEC 14443-4:2001, 7.1.1.1).

H.5.5 PCB

PCB byte shall contain allowed values, (see ISO/IEC 14443-4:2001, 7.1.1.1 and ISO/IEC 14443-4:2001, Annex C).

© ISO/IEC 2006 – All rights reserved

Copyright International Organization for Standardization
Provided by IHS under license with ISO
No reproduction or networking permitted without license from IHS
Not for Resale

H.5.6 Short Frame

Short frame (Type A only) shall contain allowed values, (see ISO/IEC 14443-3:2001, 6.3.1 and 6.4.3.2).

H.5.7 Apparatus

See H.1.

H.5.8 Procedure

During all test procedures and scenarios the logical content of the communication shall always be recorded.

H.5.9 Test report

Fill the appropriate row in “Table H.8 — Reported Results for tests methods“ according to the test results as follows:

Explanation	Test result
If the PCD does not set RFU bits to values other than default in all sent frames and never sets any field to RFU value and does not violate the length rules of R-Block, S-Block and first byte coding of Block and Frame (as informatively summarized in Annex C of ISO/IEC 14443-4:2001)	Pass
If the PCD sets at least one RFU bit to a value other than the default in any sent frames or sets any field to an RFU value or violates the length rules of R-Block or S-Block or violates the first byte rules coding of Block and Frame (as informatively summarized in Annex C of ISO/IEC 14443-4:2001)	Fail

Figure H.35 — Result criteria for Continuous monitoring of packets sent by the PCD

--`,,```,,,,````-`-`,,`,,`,`,,`---

© ISO/IEC 2006 – All rights reserved
Copyright International Organization for Standardization
Provided by IHS under license with ISO
No reproduction or networking permitted without license from IHS
Not for Resale

H.6 Reported results

Table H.4 — Type A Specific Timing table

No	Parameter	ISO Reference	Reference value	Measured value
1	Frame delay time PICC to PCD	ISO/IEC 14443-3:2001, 6.1.3	at least 1172/fc (~ 86 µs)	
2	Request Guard Time	ISO/IEC 14443-3:2001, 6.1.4	at least 7000/fc (~ 512 µs)	

NOTE All timing values are calculated for carrier frequency *fc* = 13,56 MHz and bit rate *fc*/128 (~106 kbit/s).

Table H.5 — Type B Specific Timing table

No	Parameter	ISO Reference	Minimum	Maximum	Measured value
1	SOF low	ISO/IEC 14443-3:2001, 7.1.4	10 etu (~94,40 µs)	11 etu (~103,83 µs)	
2	EOF low	ISO/IEC 14443-3:2001, 7.1.5	10 etu (~94,40 µs)	11 etu (~103,83 µs)	
3	Bit boundaries	ISO/IEC 14443-3:2001, 7.1.1	(n – 0,125) etu	(n + 0,125) etu	
4	EGT PCD to PICC	ISO/IEC 14443-3:2001, 7.1.2	0 µs	57 µs	
5	Minimum delay between the PICC EOF start and PCD SOF start	ISO/IEC 14443-3:2001, 7.1.7	10 etu + 32/*fs*	No maximum	

NOTE All timing values are calculated for carrier frequency *fc* = 13,56 MHz and bit rate *fc*/128 (~106 kbit/s).

--`,,```,,,,````-`-`,,`,,`,`,,`---

© ISO/IEC 2006 – All rights reserved

Copyright International Organization for Standardization
Provided by IHS under license with ISO
No reproduction or networking permitted without license from IHS
Not for Resale

Table H.6 — Reported Results for type A specific test methods

Test method from ISO/IEC 10373-6		Scenario Numbers		Test result
Clause	Parameter	Test Scenario Number ISO/IEC 10373-6	Scenario Number ISO/IEC 14443-4:2001, Informative Annex B	PASS or FAIL or N/A [a]
H.2.1	Frame delay time PICC to PCD			
H.2.2	Request Guard Time			
H.2.3	Handling of bit collision during ATQA			
H.2.4	Handling of anticollision loop	Scenario H 1		
		Scenario H 2		
		Scenario H 3		
		Scenario H 4		
H.2.5	Handling of RATS and ATS	Scenario H 5		
		Scenario H 6		
		Scenario H 7		
H.2.6	Handling of PPS response	Scenario H 8		
		Scenario H 9		
H.2.7	Frame size selection mechanism	Scenario H 10		
H.2.8	Handling of Start-up Frame Guard Time	Scenario H 11		
H.2.9	Handling of the CID during activation by the PCD	Scenario H 12		

[a] In case a test has several procedures indicate PASS only in case every individual procedure is PASS

Table H.7 — Reported Results for type B specific tests methods

Test method from ISO/IEC 10373-6		Scenario Numbers		Test result
Clause	Parameter	Test Scenario Number ISO/IEC 10373-6	Scenario Number ISO/IEC 14443-4:2001, Informative Annex B	PASS/FAIL [a]
H.3.1	I/O transmission timing			
H.3.2	Frame size selection mechanism	Scenario H 13		
H.3.3	Handling of the CID during activation by the PCD	Scenario H 14		
		Scenario H 15		

[a] In case a test has several procedures indicate PASS only in case every individual procedure is PASS

© ISO/IEC 2006 – All rights reserved
Copyright International Organization for Standardization
Provided by IHS under license with ISO
No reproduction or networking permitted without license from IHS
Not for Resale

Table H.8 — Reported Results for tests methods

Test method from ISO/IEC 10373-6		Scenario Numbers		Test result	
Clause	Parameter	Test Scenario Number ISO/IEC 10373-6	Scenario Number ISO/IEC 14443-4:2001, Informative Annex B	**Type A** [a]	**Type B** [a]
H.4.1	Handling of the polling loop				
H.4.2	Reaction of the PCD to request for waiting time extension	Scenario H 16			
		Scenario H 17			
H.4.3	Error detection and recovery of a transmission error	Scenario H 18	Scenario 8		
		Scenario H 19			
		Scenario H 20			
		Scenario H 21			
		Scenario H 22	Scenario 19		
		Scenario H 23			
		Scenario H 24	Scenario 10		
		Scenario H 25	Scenario 13		
		Scenario H 26	Scenario 16		
		Scenario H 27	Scenario 17		
		Scenario H 28	Scenario 20		
		Scenario H 29			
H.4.4	Handling of NAD during chaining				
H.5	Continuous monitoring of packets sent by the PCD				

[a] In case a test has several procedures indicate PASS only in case every individual procedure is PASS

Table H.9 — Test coverage report

No	Parameter	Description	Information
1	Chaining	Tested only if there is a command that supports more than 16 bytes	
2	NAD handling		

© ISO/IEC 2006 – All rights reserved
Copyright International Organization for Standardization
Provided by IHS under license with ISO
No reproduction or networking permitted without license from IHS
Not for Resale

Table H.10 — PCD RFU table report

Name	PCD command	RFU field/value	Value		Test result
			Default	Illegal	PASS/FAIL/ Not Done
short frame type A	REQA/WUPA	RFU values		All other values than '26' '52' '35' '40'-'4F' '78'-7F'	
SEL coding	SEL	RFU values (b4 to b1)		All other values than '93', '95', '97' and '92', '94', 98'	
AFI	REQB/WUPB	RFU values		All values from '90' upto 'FF'	
PARAM	REQB/WUPB	RFU field (b8 to b5)	(0000)b	All other values	
		RFU values in number of slots (b3 to b1)		(101)b (110)b (111)b	
PARAM1	ATTRIB	RFU field (b2 to b1)	(00)b	All other values	
Minimum TR0	ATTRIB	RFU values (b8 to b7)		(11)b	
Minimum TR1	ATTRIB	RFU values (b6 to b5)		(11)b	
PARAM2	ATTRIB	RFU values (b4 to b1)		All values from '9'((1001)b) upto 'F'((1111)b)	
PARAM3	ATTRIB	RFU field (b8 to b5)	(0000)b	All other values	
PARAM4	ATTRIB	RFU field (b8 to b5)	(0000)b	All other values	
PARAM4	ATTRIB	RFU value (b4 to b1)		'F'((1111)b)	

© ISO/IEC 2006 – All rights reserved
Copyright International Organization for Standardization
Provided by IHS under license with ISO
No reproduction or networking permitted without license from IHS
Not for Resale

Add a bibliography at the end of the document.

Bibliography

[1] ISO/IEC 9646-1:1994, *Information technology — Open Systems Interconnection — Conformance testing methodology and framework — Part 1: General concepts*

[2] ISO/IEC 9646-2:1994, *Information technology — Open Systems Interconnection — Conformance testing methodology and framework — Part 2: Abstract Test Suite specification*

[3] ISO/IEC 9646-3:1998, *Information technology — Open Systems Interconnection — Conformance testing methodology and framework — Part 3: The Tree and Tabular Combined Notation (TTCN)*

[4] ISO/IEC 9646-4:1994, *Information technology — Open Systems Interconnection — Conformance testing methodology and framework — Part 4: Test realization*

[5] ISO/IEC 9646-5:1994, *Information technology — Open Systems Interconnection — Conformance testing methodology and framework — Part 5: Requirements on test laboratories and clients for the conformance assessment process*

[6] ISO/IEC 9646-6:1994, *Information technology — Open Systems Interconnection — Conformance testing methodology and framework — Part 6: Protocol profile test specification*

[7] ISO/IEC 9646-7:1995, *Information technology — Open Systems Interconnection — Conformance testing methodology and framework — Part 7: Implementation Conformance Statements*

--`,,```,,,,````-`-`,,`,,`,`,,`---

© ISO/IEC 2006 – All rights reserved

Copyright International Organization for Standardization
Provided by IHS under license with ISO
No reproduction or networking permitted without license from IHS

Not for Resale

ICS 35.240.15

Price based on 55 pages

© ISO/IEC 2006 – All rights reserved
Copyright International Organization for Standardization
Provided by IHS under license with ISO
No reproduction or networking permitted without license from IHS
Not for Resale