INTERNATIONAL STANDARDIZED PROFILE

ISO/IEC ISP 12069-4

First edition
1999-02-01

Information technology — International Standardized Profiles ADFnn — Document Filing and Retrieval (DFR) —

Part 4:
ADF12 — Common Filing and Retrieval — Archiving Profile

Technologies de l'information — Profils normalisés internationaux ADFnn — Classement et recherche documentaire —

Partie 4: ADF12 — Classement et recherche courante — Profil d'archivage

Reference number
ISO/IEC ISP 12069-4:1999(E)

Copyright International Organization for Standardization
Provided by IHS under license with ISO
No reproduction or networking permitted without license from IHS

Not for Resale

Contents

1 Scope 1

1.1 General 1

1.2 Position within the taxonomy 1

1.3 Scenario 1

2 Normative references 2

3 Definitions 3

4 Abbreviations 3

5 Conformance 3

6 Constraints supported by ADF12 4

6.1 Support Classification 4

6.2 Support classification of service 4

Annex A (normative) **Profile requirements list for this part of ISO/IEC ISP 12069** 5

A.1 DfrBind 6

A.1.1 DfrBindArgument Parameters 6

A.1.2 DfrBindResult Parameters 6

A.1.3 DfrBind Error 6

A.2 DfrUnbind 6

A.3 Create 6

A.3.1 CreateArgument Parameters 7

A.3.1.1 DfrObjectClass 8

A.3.1.2 DfrEntryName 8

A.3.1.3 GroupMemberPosition 8

A.3.1.4 EntryInformationSelection 8

A.3.1.5 DfrObjectContent 9

© ISO/IEC 1999

All rights reserved. Unless otherwise specified, no part of this publication may be reproduced or utilized in any form or by any means, electronic or mechanical, including photocopying and microfilm, without permission in writing from the publisher.

ISO/IEC Copyright Office • Case postale 56 • CH-1211 Genève 20 • Switzerland

Printed in Switzerland

--`,,```,,,,````-`-`,,`,,`,`,,`---

;;

Copyright International Organization for Standardization
Provided by IHS under license with ISO
No reproduction or networking permitted without license from IHS

Not for Resale

A.3.2 CreateResult Parameters 9
A.3.2.1 EntryInformation 10
A.3.3 Create Error 10
A.4 Delete 10
A.5 Copy 11
A.5.1 CopyArgument Parameters 11
A.5.1.1 Entry 12
A.5.1.2 EntryModification 12
A.5.1.3 SourceEntry 13
A.5.1.4 ErrorHandlingMode 13
A.5.2 CopyResult Parameters 13
A.5.3 Copy Error 14
A.6 Move 14
A.7 Read 14
A.8 Modify 14
A.9 List 14
A.10 Search 15
A.11 Reserve 15
A.12 Abandon 15
A.13 Error 15
A.13.1 AttributeError 16
A.13.2 NameError 16
A.13.3 AccessError 16
A.13.4 ReferentAccessError 16
A.13.5 SecurityError 16
A.13.6 ServiceError 16
A.13.7 AbandonFailed 16
A.13.8 Abandoned 16
A.13.9 ExternalServerError 16
A.13.10 VersionManagementError 16
A.13.11 UpdateError 17

--`,,```,,,,````-`-`,,`,,`,`,,`---

Copyright International Organization for Standardization
Provided by IHS under license with ISO
No reproduction or networking permitted without license from IHS
Not for Resale

A.13.11.1 UpdateProblem 17
A.13.12 ReservationError 17
A.13.13 InterServerAccessError 17
A.14 DFR-Object-Classes 18
A.15 DFR-Attributes 18
A.15.1 Support Classification 18
A.15.1.1 DFR-Basic-Attribute-Set 18
A.15.2 Attribute-Types 18

--`,,```,,,,````-`-`,,`,,`,`,,`---
Copyright International Organization for Standardization
Provided by IHS under license with ISO
No reproduction or networking permitted without license from IHS Not for Resale

Foreword

ISO (the International Organization for Standardization) and IEC (the International Electrotechnical Commission) form the specialized system for worldwide standardization. National bodies that are members of ISO or IEC participate in the development of International Standards through technical committees established by the respective organization to deal with particular fields of technical activity. ISO and IEC technical committees collaborate in fields of mutual interest. Other international organizations, governmental and non-governmental, in liaison with ISO and IEC, also take part in the work.

In the field of information technology, ISO and IEC have established a joint technical committee, ISO/IEC JTC 1. In addition to developing International Standards, ISO/IEC JTC 1 has created a Special Group on Functional Standardization for the elaboration of International Standardized Profiles.

An International Standardized Profile is an internationally agreed, harmonized document which identifies a standard or group of standards, together with options and parameters, necessary to accomplish a function or a set of functions.

Draft International Standardized Profiles are circulated to national bodies for voting. Publication as an International Standardized Profile requires approval by at least 75 % of the national bodies casting a vote.

International Standardized Profile ISO/IEC ISP 12069-4 was prepared with the collaboration of

— Asia-Oceania Workshop (AOW);

— European Workshop for Open Systems (EWOS);

— Open Systems Environment Implementors' Workshop (OIW).

ISO/IEC ISP 12069 consists of the following parts, under the general title *Information technology — International Standardized Profiles ADFnn — Document Filing and Retrieval (DFR)*:

— *Part 1: Introduction to the DFR ISP*

— *Part 2: Specification of ROSE, RTSE, ACSE, Presentation and Session protocols for use by DFR*

— *Part 3: ADF11 — Common Document Filing and Retrieval — Read Only Profile*

— *Part 4: ADF12 — Common Filing and Retrieval — Archiving Profile*

— *Part 5: ADF13 — Common Filing and Retrieval — Document Store Manipulation Profile*

— *Part 6: ADF21 — Remote Store Management — Simple Management Profile*

— *Part 7: ADF22 — Remote Store Management — Full Management Profile*

Annex A forms an integral part of this part of ISO/IEC ISP 12069.

Copyright International Organization for Standardization
Provided by IHS under license with ISO
No reproduction or networking permitted without license from IHS Not for Resale

Copyright International Organization for Standardization
Provided by IHS under license with ISO
No reproduction or networking permitted without license from IHS
Not for Resale

Information technology — International Standardized Profiles ADFnn — Document Filing and Retrieval (DFR) —

Part 4:
ADF12 — Common Filing and Retrieval — Archiving Profile

1 Scope

1.1 General

This part of ISO/IEC ISP 12069 contains the overall specifications for the support of document filing and retrieval functionality between a DFR user and a DFR server using DFR access protocol. These specifications form the archiving capabilities of common document filing and retrieval application functions, called ADF12.

For this part of ISO/IEC ISP 12069, specifications defined in ISO/IEC ISP 12069-1 and ISO/IEC ISP 12069-2 apply.

1.2 Position within the taxonomy

This part of ISO/IEC ISP 12069 is the fourth part of the DFR ISPs. The structure of DFR ISPs and the rationales are described in ISO/IEC ISP 12069-1 according to the taxonomy described in ISO/IEC TR 10000.

ADF12 Archiving profile is part of the ADF1n series of profiles, called Common Filing and Retrieval profiles. It includes the functionality of ADF11 Read Only profile (specified in ISO/IEC ISP 12069-3) and is a subset of ADF13 Document Store Manipulation profile.

It may be combined with any T-Profiles (see ISO/IEC TR 10000) specifying the OSI connection-mode Transport service.

1.3 Scenario

ADF12 is intended to accomplish the document store archiving when common filing and retrieval capabilities of a DFR document are required.

The model used is one of a DFR user and a DFR server intercommunicating using the ADF12 Profile of the DFR protocol, as shown in figure 1.

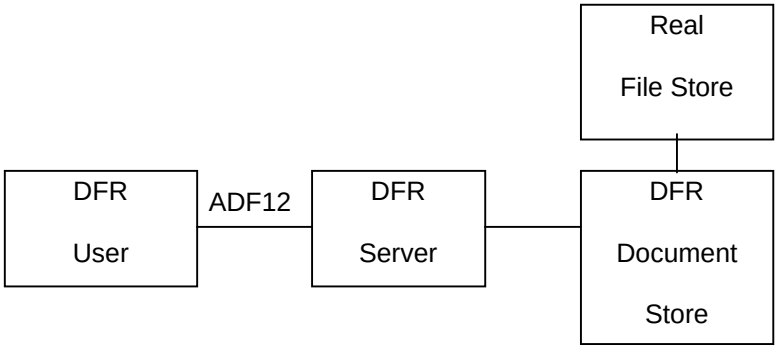

Figure 1 — Scenario for the use of ADF12

Copyright International Organization for Standardization
Provided by IHS under license with ISO
No reproduction or networking permitted without license from IHS
Not for Resale

2 Normative references

The following documents contain provisions which, through reference in this text, constitute provisions of this part of ISO/IEC ISP 12069. At the time of publication, the editions indicated were valid. All documents are subject to revision and parties to agreements based on this part of ISO/IEC ISP 12069 are warned against automatically applying any more recent editions of the documents listed below, since the nature of references made by ISPs to such documents is that they may be specific to a particular edition. Members of IEC and ISO maintain registers of currently valid International Standards and ISPs, and ITU-T maintains published editions of its current Recommendations.

ISO/IEC 8326:1996, *Information technology — Open Systems Interconnection — Session service definition.*

ISO/IEC 8327-1:1996, *Information technology — Open Systems Interconnection — Connection-oriented Session protocol: Protocol specification.*

ISO 8649:1988, *Information processing systems — Open Systems Interconnection — Service definition for the Association Control Service Element.*

ISO 8650:1988, *Information processing systems — Open Systems Interconnection — Protocol specification for the Association Control Service Element.*

ISO/IEC 8822:1994, *Information technology — Open Systems Interconnection — Connection oriented presentation service definition.*

ISO/IEC 8823-1:1994, *Information technology — Open Systems Interconnection — Connection oriented presentation protocol: Protocol specification.*

ISO/IEC 8824:1990, *Information technology — Open Systems Interconnection — Specification of Abstract Syntax Notation One (ASN.1).*

ISO/IEC 8825:1990, *Information technology — Open Systems Interconnection — Specification of Basic Encoding Rules for Abstract Syntax Notation One (ASN.1).*

ISO/IEC 9072-1:1989, *Information processing systems — Text communication — Remote Operations — Part 1: Model, notation and service definition.*

ISO/IEC 9072-2:1989, *Information processing systems — Text communication — Remote Operations — Part 2: Protocol specification.*

ISO/IEC 9594-1:1995, *Information technology — Open Systems Interconnection — The Directory: Overview of concepts, models and services.*

ISO/IEC 9646-7:1995, *Information technology — Open Systems Interconnection — Conformance testing methodology and framework — Part 7: Implementation Conformance Statements.*

ISO/IEC TR 10000-1:1995, *Information technology — Framework and taxonomy of International Standardized Profiles — Part 1: General principles and documentation framework.*

ISO/IEC TR 10000-2:1995, *Information technology — Framework and taxonomy of International Standardized Profiles — Part 2: Principles and Taxonomy for OSI profiles.*

ISO/IEC 10031-2:1991, *Information technology — Text and office systems — Distributed-office-applications model — Part 2: Distinguished-object-reference and associated procedures.*

ISO/IEC 10166-1:1991, *Information technology — Text and office systems — Document Filing and Retrieval (DFR) — Part 1: Abstract service definition and procedures.*

ISO/IEC 10166-1:1991/Amd.1:1995, *Information technology — Text and office systems — Document Filing and Retrieval (DFR) — Part 1: Abstract service definition and procedures — Amendment 1: Minor Enhancements.*

Copyright International Organization for Standardization
Provided by IHS under license with ISO
No reproduction or networking permitted without license from IHS Not for Resale

ISO/IEC 10166-1:1991/Amd.2:1996, *Information technology — Text and office systems — Document Filing and Retrieval (DFR) — Part 1: Abstract service definition and procedures — Amendment 2: Combined usage of DFR and DTAM.*

ISO/IEC 10166-1:1991/Cor.1:1994, *Information technology — Text and office systems — Document Filing and Retrieval (DFR) — Part 1: Abstract service definition and procedures — Technical Corrigendum 1.*

ISO/IEC 10166-1:1991/Cor.2:1994, *Information technology — Text and office systems — Document Filing and Retrieval (DFR) — Part 1: Abstract service definition and procedures — Technical Corrigendum 2.*

ISO/IEC 10166-1:1991/Cor.3:1994, *Information technology — Text and office systems — Document Filing and Retrieval (DFR) — Part 1: Abstract service definition and procedures — Technical Corrigendum 3.*

ISO/IEC 10166-2:1991, *Information technology — Text and office systems — Document Filing and Retrieval (DFR) — Part 2: Protocol specification.*

ISO/IEC 10166-2:1991/Amd.1:1995, *Information technology — Text and office systems — Document Filing and Retrieval (DFR) — Part 2: Protocol specification — Amendment 1: Minor enhancements for additional error.*

ISO/IEC 10166-2:1991/Amd.2:1996, *Information technology — Text and office systems — Document Filing and Retrieval (DFR) — Part 2: Protocol specification — Amendment 2: Combined usage of DFR and DTAM.*

ISO/IEC 10166-2:1991/Cor.1:1994, *Information technology — Text and office systems — Document Filing and Retrieval (DFR) — Part 2: Protocol specification — Technical Corrigendum 1.*

ISO/IEC 10166-2:1991/Cor.2:1995, *Information technology — Text and office systems — Document Filing and Retrieval (DFR) — Part 2: Protocol specification — Technical Corrigendum 2.*

ISO/IEC ISP 11188-1:1995, *Information technology — International Standardized Profile — Common upper layer requirements — Part 1: Basic connection oriented requirements.*

ISO/IEC ISP 12069-1:1996, *Information technology — International Standardized Profiles ADFnn — Document Filing and Retrieval (DFR) — Part 1: Introduction to the DFR ISP.*

ISO/IEC ISP 12069-2:1996, *Information technology — International Standardized Profiles ADFnn — Document Filing and Retrieval (DFR) — Part 2: Specification of ROSE, RTSE, ACSE, Presentation and Session protocols for use by DFR.*

ISO/IEC ISP 12069-3:1996, *Information technology — International Standardized Profiles ADFnn — Document Filing and Retrieval (DFR) — Part 3: ADF11 — Common Document Filing and Retrieval — Read Only Profile.*

3 Definitions

For the purposes of this part of ISO/IEC ISP 12069, the definitions given in ISO/IEC ISP 12069-1 and ISO/IEC ISP 12069-2 apply.

4 Abbreviations

For the purposes of this part of ISO/IEC ISP 12069, the abbreviations specified in ISO/IEC ISP 12069-1 and ISO/IEC ISP 12069-2 apply.

5 Conformance

This part of ISO/IEC ISP 12069 states requirements upon implementation to achieve interworking. A claim of conformance to this ADF12 is a claim that all requirements in the relevant base standards and recommendations are satisfied, that all the requirements in ISO/IEC ISP 12069-1, ISO/IEC ISP 12069-2 and the text of ISO/IEC ISP 12069-3 referenced are satisfied, and that all requirements in clause 6 and annex A of this part of ISO/IEC ISP 12069 are satisfied.

Copyright International Organization for Standardization
Provided by IHS under license with ISO
No reproduction or networking permitted without license from IHS Not for Resale

6 Constraints supported by ADF12

This clause describes the characteristics which are supported by this part of ISO/IEC ISP 12069.

The specifications of annex A are required for applications conforming to ADF12.

6.1 Support Classification

For this part of ISO/IEC ISP 12069, the constraints provided in subclause 3.2 of ISO/IEC ISP 12069-1 apply.

6.2 Support classification of service

The support classification for each operation is described in Table 1.

Table 1 — Support classification for DFR Operations

Operation	Support Classification
DfrBind	m
DfrUnbind	m
Create	m
Delete	i
Copy	m
Move	i
Read	m
Modify	i
List	m
Search	m
Reserve	i
Abandon	o

Support classification: m: mandatory; o: optional; i: out of scope

Copyright International Organization for Standardization
Provided by IHS under license with ISO
No reproduction or networking permitted without license from IHS Not for Resale

Annex A
(normative)

Profile requirements list for this part of ISO/IEC ISP 12069

This annex specifies the support constraints and characteristics of ISO/IEC ISP 12069 on what shall or may appear in the implementation of ADF12.

In the event of a discrepancy becoming apparent in the body of this part of ISO/IEC ISP 12069 and the tables in this annex, this annex is to take precedence.

In each table, "Static Client" means static capability required for an ADF12 user implementation, "Static Server" means static capability required for an ADF12 server implementation, and "Dynamic" means dynamic behaviour between ADF12 user and server implementations. The “Comments“ column contains value ranges, lengths of parameters and references to other tables (clauses).

Table A-1 defines specific conditions (in addition to those specified in Table A-1 of ISO/IEC ISP 12069-3) that are used to determine the dynamic conditional support classification (see subclause 3.2.2 of ISO/IEC ISP 12069-1).

Table A.1 — Specific Conditions to determine dynamic behaviour

Symbol	Condition	Support classification	
		TRUE	FALSE
PG	Function set ‘Full Set’ is implemented.	m2	x
PR	Object class ‘Reference’ is implemented.	m2	x

Support classification: m2: mandatory; x: excluded

NOTE

This table defines symbols to be used for the explanatory remarks.

For each symbol indicated in this table, each implementation may individually select the value “TRUE“ or “FALSE“. If "TRUE" is selected the value of dynamic support classification should be replaced by the value specified in "TRUE" column. Otherwise, the value of dynamic support classification should be replaced by the value specified in "FALSE" column.

The Function Groups indicated by symbols are the Elements of Service defined in clause 8 and Annex A of ISO/IEC ISP 12069-1.

Copyright International Organization for Standardization
Provided by IHS under license with ISO
No reproduction or networking permitted without license from IHS
Not for Resale

A.1 DfrBind

This clause specifies restrictions on the DfrBind operation.

The specifications provided in A.1 of ISO/IEC ISP 12069-3 apply with the following modifications.

A.1.1 DfrBindArgument Parameters

This subclause specifies restrictions on the DfrBind Argument parameters.

The specifications provided in A.1.1 of ISO/IEC ISP 12069-3 apply with the following modifications:

— The entry for the “dfr-profile-selection“ element is replaced by the following entry:

Element	Data Type	Default	Static Client	Static Server	Dynamic	Comments
dfr-profile-selection	OBJECT IDENTIFIER	-	m	m	m1	

A.1.2 DfrBindResult Parameters

This subclause specifies restrictions on the DfrBind Result parameters.

The specifications provided in A.1.2 of ISO/IEC ISP 12069-3 apply.

A.1.3 DfrBind Error

This subclause specifies restrictions on the DfrBind Error parameters.

The specifications provided in A.1.3 of ISO/IEC ISP 12069-3 apply.

A.2 DfrUnbind

This clause specifies restrictions on the DfrUnbind operation.

The specifications provided in A.2 of ISO/IEC ISP 12069-3 apply.

A.3 Create

This clause specifies restrictions on the Create operation.

Copyright International Organization for Standardization
Provided by IHS under license with ISO
No reproduction or networking permitted without license from IHS Not for Resale

A.3.1 CreateArgument Parameters

This subclause specifies restrictions on the arguments used in the invocation of the Create operation.

Element	Data Type	Default	Static Client	Static Server	Dynamic	Comments
CreateArgument [SEQUENCE]						
CommonUpdateArguments [SEQUENCE]						
object-class	DfrObjectClass	-	m	m	m1	(size: 1 octet) see A.3.1.1
entry	Entry	-	-	-	x	
destination	DfrEntryName	-	m	m	m1	see A.3.1.2
position	GroupMember Position	last	o	o	c1	see A.3.1.3
modifi-cations	SEQUENCE OF Entry Modification	-	i	i	x	
selection	EntryInfor-mationSelection	-	o	o	c1	see A.3.1.4
reference-qos	Requested-QoS-Level	-	-	-	x	
attributes	SET OF Attribute	-	m	m	m2	[cf. ISO/IEC 9594]
content	DfrObject Content	-	o	m	c1	see A.3.1.5
CommonArguments [SEQUENCE]						
task-id	OCTET STRING	-	o	o	c1 (PA)	
reservation	Reservation	-	i	i	x	
error-handling	ErrorHandling Mode	-	-	-	x	
priority	ENUMERATED	1	o	m	c1	(size: 1 octet)
privileges	Privileges	-	o	o	c1 (PS)	see A.7.1.9 in ISO/IEC ISP 12069-3

Copyright International Organization for Standardization
Provided by IHS under license with ISO
No reproduction or networking permitted without license from IHS
Not for Resale

A.3.1.1 DfrObjectClass

This subclause specifies restrictions on the "DfrObjectClass" parameter.

Element	Data Type	Default	Static Client	Static Server	Dynamic	Comments
DfrObjectClass [ENUMERATED]						
dfr-document	-	-	o	m	c1	0 (size: 1 octet)
dfr-root-group	-	-	-	-	x	1
dfr-proper-group	-	-	o	o	c1 (PG)	2 (size: 1 octet)
dfr-reference	-	-	o	o	c1 (PD)	3 (size: 1 octet)
dfr-search-result-list	-	-	i	i	x	4

A.3.1.2 DfrEntryName

This subclause specifies restrictions on the "DfrEntryName" parameter.

The specifications provided in A.7.1.2 (Read operation, ReadArgument parameters, DfrEntryName) of ISO/IEC ISP 12069-3 apply.

A.3.1.3 GroupMemberPosition

This subclause specifies restrictions on the "GroupMemberPosition" parameter.

Element	Data Type	Default	Static Client	Static Server	Dynamic	Comments
GroupMemberPosition [CHOICE]						
last	NULL	-	m	m	m2	
first	NULL	-	m	m	m2	
after	DfrEntryName	-	m	m	m2	see A.3.1.2
before	DfrEntryName	-	m	m	m2	see A.3.1.2

A.3.1.4 EntryInformationSelection

This subclause specifies restrictions on the "EntryInformationSelection" parameter.

The specifications provided in A.7.1.5 (Read operation, ReadArgument parameters, EntryInformationSelection) of ISO/IEC ISP 12069-3 apply.

Copyright International Organization for Standardization
Provided by IHS under license with ISO
No reproduction or networking permitted without license from IHS Not for Resale

A.3.1.5 DfrObjectContent

This subclause specifies restrictions on the "DfrObjectContent" parameter.

Element	Data Type	Default	Static Client	Static Server	Dynamic	Comments
DfrObjectContent [CHOICE]						
document-content	EXTERNAL	-	m	m	m2	
root-group-content	SEQUENCE OF OCTET STRING	-	-	-	x	
proper-group-content	SEQUENCE OF OCTET STRING	-	-	-	x	
reference-content	DOR	-	o	o	c1 (PD)	[cf. ISO/IEC 10031-2]
search-result-list-content	DfrSearchResult ListContent	-	-	-	x	

A.3.2 CreateResult Parameters

This subclause specifies restrictions on the result parameters of the Create operation.

Element	Data Type	Default	Static Client	Static Server	Dynamic	Comments
CreateResult [SEQUENCE]						
CommonUpdateResult [SEQUENCE]						
upi	OCTET STRING	-	m	m	m1	(size: max 32 octets)
entry-information	EntryInformation	-	c	c	c2 (P1)	see A.3.2.1
warnings	SEQUENCE OF Warning	{}	-	-	x	
continuation	OCTET STRING	-	-	-	x	
reference-qos	Quality-of-Service	-	-	-	x	
referent-altered	ENUMERATED	-	i	i	x	

Copyright International Organization for Standardization
Provided by IHS under license with ISO
No reproduction or networking permitted without license from IHS Not for Resale

A.3.2.1 EntryInformation

This subclause specifies restrictions on the "EntryInformation" parameter.

The specifications provided in A.7.2.1 (Read operation, ReadResult parameters, EntryInformation) of ISO/IEC ISP 12069-3 apply.

A.3.3 Create Error

This subclause specifies restrictions on the result error of the Create operation.

Element	Data Type	Default	Static Client	Static Server	Dynamic	Comments
AttributeError	AttributeError	-	m	m	m2	see A.13.1
NameError	NameError	-	m	m	m2	see A.13.2
AccessError	AccessError	-	m	m	m2	see A.13.3
UpdateError	UpdateError	-	m	m	m2	See A.13.11
ReferentAccess Error	ReferentAccess Error	-	o	o	c1 (PR)	see A.13.4
InterServer AccessError	InterServer AccessError	-	i	i	x	
VersionManagement Error	VersionManagement Error	-	o	o	c1 (PV)	see A.13.10
SecurityError	SecurityError	-	o	o	c1 (PS)	see A.13.5
ServiceError	ServiceError	-	m	m	m2	see A.13.6
Abandoned	Abandoned	-	c	c	c2 (PA)	see A.13.8

A.4 Delete

This operation is not supported by this part of ISO/IEC ISP 12069.

Copyright International Organization for Standardization
Provided by IHS under license with ISO
No reproduction or networking permitted without license from IHS Not for Resale

A.5 Copy

This clause specifies restrictions on the Copy operation.

A.5.1 CopyArgument Parameters

This subclause specifies restrictions on the arguments used in the invocation of the Copy operation.

Element	Data Type	Default	Static Client	Static Server	Dynamic	Comments
CopyArgument [SEQUENCE]						
CommonUpdateArguments [SEQUENCE]						
object-class	DfrObjectClass	-	i	i	x	
entry	Entry	-	m	m	m1	see A.5.1.1
destination	DfrEntryName	-	m	m	m1	see A.3.1.2
position	GroupMember Position	last	o	o	c1	see A.3.1.3
modifi-cations	SEQUENCE OF EntryModification	-	o	o	c1	see A.5.1.2
selection	EntryInfor-mationSelection	-	o	o	c1	see A.3.1.4
reference-qos	Requested-QoS-Level	-	-	-	x	
CommonArguments [SEQUENCE]						
task-id	OCTET STRING	-	o	o	c1 (PA)	
reservation	Reservation	-	i	i	x	
error-handling	ErrorHandling Mode	-	o	m	c1	see A.5.1.4
priority	ENUMERATED	1	o	m	c1	(size: 1 octet)
privileges	Privileges	-	o	o	c1 (PS)	

NOTE The Entry data type is not defined in the base standard, but it is aligned with the specification of the entry parameter in the base standard.

Copyright International Organization for Standardization
Provided by IHS under license with ISO
No reproduction or networking permitted without license from IHS
Not for Resale

A.5.1.1 Entry

This subclause specifies restrictions on the "Entry" parameter.

Element	Data Type	Default	Static Client	Static Server	Dynamic	Comments
Entry [CHOICE]						
local	DfrEntryName	-	m	m	m1	see A.3.1.2
external	DOR	-	o	o	c1 (PD)	[cf. ISO/IEC 10031-2]

A.5.1.2 EntryModification

This subclause specifies restrictions on the "EntryModification".

Element	Data Type	Default	Static Client	Static Server	Dynamic	Comments
EntryModification [CHOICE]						
put-attribute	Attribute	-	i	i	x	
remove-attribute	AttributeType	-	i	i	x	
copy-attributes-from	SEQUENCE { source: SourceEntry, attribute-selection: SET OF AttributeType OPTIONAL}	-	m	m	m1	see A.5.1.3 and [cf. ISO/IEC 9594]
add-values	Attribute	-	i	i	x	
remove-values	Attribute	-	i	i	x	
add-values-from	SEQUENCE { source: SourceEntry, attribute-selection: SET OF AttributeType OPTIONAL}	-	i	i	x	
put-content	DfrObject Content	-	i	i	x	
remove-content	NULL	-	i	i	x	
copy-content-from	SourceEntry	-	m	m	m1	see A.5.1.3

Copyright International Organization for Standardization
Provided by IHS under license with ISO
No reproduction or networking permitted without license from IHS Not for Resale

A.5.1.3 SourceEntry

This subclause specifies restrictions on the "SourceEntry".

Element	Data Type	Default	Static Client	Static Server	Dynamic	Comments
SourceEntry [CHOICE]						
parent	NULL	-	o	m	c1	
referent	NULL	-	o	m	c1 (PR)	
previous-version	NULL	-	o	m	c1 (PV)	
specified-entry	DfrEntryName	-	o	m	c1	see A.3.1.2
dor	DOR	-	o	m	c1 (PD)	

A.5.1.4 ErrorHandlingMode

This subclause specifies restrictions on the "ErrorHandlingMode" parameter.

The specifications provided in A.9.1.4 (List operation, ListArgument parameters, ErrorHandlingMode) of ISO/IEC ISP 12069-3 apply.

A.5.2 CopyResult Parameters

This subclause specifies restrictions on the result parameters of the Copy operation.

Element	Data Type	Default	Static Client	Static Server	Dynamic	Comments
CopyResult [SEQUENCE]						
CommonUpdateResult [SEQUENCE]						
upi	OCTET STRING	-	m	m	m1	(size: max 32 octets)
entry-information	Entry Information	-	c	c	c2 (P1)	see A.3.2.1
warnings	SEQUENCE OF Warning	{}	m	o	c1	
continuation	OCTET STRING	-	-	-	x	
reference-qos	Quality-of-Service	-	-	-	x	
referent-altered	ENUMERATED	-	i	i	x	

Copyright International Organization for Standardization
Provided by IHS under license with ISO
No reproduction or networking permitted without license from IHS
Not for Resale

A.5.3 Copy Error

This subclause specifies restrictions on the result error of the Copy operation.

Element	Data Type	De-fault	Static Client	Static Server	Dynamic	Comments
AttributeError	AttributeError	-	m	m	m2	see A.13.1
NameError	NameError	-	m	m	m2	see A.13.2
AccessError	AccessError	-	m	m	m2	see A.13.3
UpdateError	UpdateError	-	m	m	m1	See A.13.11
Referent AccessError	Referent AccessError	-	o	o	c1 (PR)	see A.13.4
InterServer AccessError	InterServer AccessError	-	i	i	x	
VersionManagement Error	VersionManagement Error	-	o	o	c1 (PV)	see A.13.10
SecurityError	SecurityError	-	o	o	c1 (PS)	see A.13.5
ServiceError	ServiceError	-	m	m	m2	see A.13.6
Abandoned	Abandoned	-	c	c	c2 (PA)	see A.13.8

A.6 Move

This operation is not supported by this part of ISO/IEC ISP 12069.

A.7 Read

This clause specifies restrictions on the Read operation.

The specifications provided in A.7 of ISO/IEC ISP 12069-3 apply.

A.8 Modify

This operation is not supported by this part of ISO/IEC ISP 12069.

A.9 List

This clause specifies restrictions on the List operation.

The specifications provided in A.9 of ISO/IEC ISP 12069-3 apply.

Copyright International Organization for Standardization
Provided by IHS under license with ISO
No reproduction or networking permitted without license from IHS Not for Resale

A.10 Search

This clause specifies restrictions on the Search operation.

The specifications provided in A.10 of ISO/IEC ISP 12069-3 apply.

A.11 Reserve

This operation is not supported by this part of ISO/IEC ISP 12069.

A.12 Abandon

This clause specifies restrictions on the Abandon operation.

The specifications provided in A.12 of ISO/IEC ISP 12069-3 apply.

A.13 Error

This clause explains details on the parameters which report errors that have been detected in each operation. The specifications provided in A.13 of ISO/IEC ISP 12069-3 apply.

The table below shows the list of errors responding to each operation.

	Bind	**Unbind**	**Create**	**Copy**	**Read**	**List**	**Search**	**Abandon**
AttributeError	-	-	m	m	-	m	m	-
NameError	-	-	m	m	m	m	m	-
AccessError	-	-	m	m	m	m	m	-
UpdateError	-	-	m	m	-	-	i	-
ReferentAccessError (PR)	-	-	o	o	m	-	-	-
InterServerAccessError	-	-	i	i	i	-	-	-
ReservationError	-	-	-	-	i	i	i	-
VersionManagement Error (PV)	-	-	o	o	-	-	-	-
SecurityError	m	-	o (PS)	o (PS)	o (PS)	o (PS)	o (PS)	-
ServiceError	m	-	m	m	m	m	m	-
AbandonFailed	-	-	-	-	-	-	-	m
Abandoned (PA)	-	-	c	c	c	m	m	-
ExternalServerError	-	-	-	-	o	-	o	-

Copyright International Organization for Standardization
Provided by IHS under license with ISO
No reproduction or networking permitted without license from IHS
Not for Resale

A.13.1 AttributeError

This subclause specifies restrictions on the parameters of the 'AttributeError' error.

The specifications provided in A.13.1 of ISO/IEC ISP 12069-3 apply.

A.13.2 NameError

This subclause specifies restrictions on the parameters of the 'NameError' error.

The specifications provided in A.13.2 of ISO/IEC ISP 12069-3 apply.

A.13.3 AccessError

This subclause specifies restrictions on the parameters of the 'AccessError' error.

The specifications provided in A.13.3 of ISO/IEC ISP 12069-3 apply.

A.13.4 ReferentAccessError

This subclause specifies restrictions on the parameters of the 'ReferentAccessError' error.

The specifications provided in A.13.4 of ISO/IEC ISP 12069-3 apply.

A.13.5 SecurityError

This subclause specifies restrictions on the parameters of the 'SecurityError' error.

The specifications provided in A.13.5 of ISO/IEC ISP 12069-3 apply.

A.13.6 ServiceError

This subclause specifies restrictions on the parameters of the 'ServiceError' error.

The specifications provided in A.13.6 of ISO/IEC ISP 12069-3 apply.

A.13.7 AbandonFailed

This subclause specifies restrictions on the parameters of the 'AbandonFailed' error.

The specifications provided in A.13.7 of ISO/IEC ISP 12069-3 apply.

A.13.8 Abandoned

This subclause specifies restrictions on the parameters of the 'Abandoned' error.

The specifications provided in A.13.8 of ISO/IEC ISP 12069-3 apply.

A.13.9 ExternalServerError

This subclause specifies restrictions on the parameters of the 'ExternalServerError' error.

The specifications provided in A.13.9 of ISO/IEC ISP 12069-3 apply.

A.13.10 VersionManagementError

This subclause specifies restrictions on the parameters of the 'VersionManagementError' error.

The specifications provided in A.13.10 of ISO/IEC ISP 12069-3 apply.

--`,,```,,,,````-`-`,,`,,`,`,,`---
Copyright International Organization for Standardization
Provided by IHS under license with ISO
No reproduction or networking permitted without license from IHS Not for Resale

A.13.11 UpdateError

This subclause specifies restrictions on the parameters of the 'UpdateError' error.

Element	Data Type	Default	Static Client	Static Server	Dynamic	Comments
UpdateError [SEQUENCE]						
entry	DfrEntryName	-	m	m	m1	see A.3.1.2
problem	UpdateProblem	-	m	m	m1	see A.13.11.1

A.13.11.1 UpdateProblem

This subclause specifies restrictions on the parameters of the ‘UpdateProblem’.

Element	Data Type	Default	Static Client	Static Server	Dynamic	Comments
UpdateProblem [ENUMERATED]						
inappropriate-object-class	-	-	o	m	c1	1
insufficient-access-rights	-	-	o	m	c1	2
reserved-by-a-user	-	-	o	m	c1	3
illegal-content-modification	-	-	o	m	c1	4
group-membership-criteria-violation	-	-	o	m	c1	5
reference-loop-detected	-	-	o	m	c1 (PR)	6

A.13.12 ReservationError

This subclause specifies restrictions on the parameters of the 'ReservationError' error.

This error is not supported by this part of ISO/IEC ISP 12069.

A.13.13 InterServerAccessError

This subclause specifies restrictions on the parameters of the 'InterServerAccessError' error.

This error is not supported by this part of ISO/IEC ISP 12069.

--`,,```,,,,````-`-`,,`,,`,`,,`---

Copyright International Organization for Standardization
Provided by IHS under license with ISO
No reproduction or networking permitted without license from IHS Not for Resale

A.14 DFR-Object-Classes

This clause specifies restrictions on the support classification of the DFR-Object Classes.

The specifications provided in A.14 of ISO/IEC ISP 12069-3 apply.

A.15 DFR-Attributes

This clause specifies the support classification and the type of the DFR-Attributes.

The specifications provided in A.15 of ISO/IEC ISP 12069-3 apply with the following modifications.

A.15.1 Support Classification

This subclause specifies restrictions on the support classification of DFR-Attributes.

The specifications provided in A.15.1 of ISO/IEC ISP 12069-3 apply with the following modifications.

A.15.1.1 DFR-Basic-Attribute-Set

This subclause specifies restrictions on the „DFR-Basic-Attribute-Set“.

The specifications provided in A.15.1.1 of ISO/IEC ISP 12069-3 apply with the following modifications.

Attribute-Type	**Support Classification**			
	dfr-document	dfr-root-group / dfr-proper-group	dfr-reference	dfr-search-result-list
dfr-membership-criteria	-	o	-	-

A.15.2 Attribute-Types

This subclause specifies restrictions on „Attribute-Types“.

The specifications provided in A.15.2 of ISO/IEC ISP 12069-3 apply with the following modifications.

Attribute-Type	**Single/Multi-valued**	**Data Type**	**Comments**
dfr-membership-criteria	Single	Filter	

Copyright International Organization for Standardization
Provided by IHS under license with ISO
No reproduction or networking permitted without license from IHS Not for Resale

--`,,```,,,,````-`-`,,`,,`,`,,`---

Copyright International Organization for Standardization
Provided by IHS under license with ISO
No reproduction or networking permitted without license from IHS

Not for Resale

© ISO/IEC

ICS 35.100.05

Price based on 18 pages

Copyright International Organization for Standardization
Provided by IHS under license with ISO
No reproduction or networking permitted without license from IHS

Not for Resale