INTERNATIONAL STANDARDIZED PROFILE

ISO/IEC ISP 12069-3

First edition
1996-10-15

Information technology — International Standardized Profiles ADFnn — Document Filing and Retrieval (DFR) —

Part 3:
ADF11 — Common Document Filing and Retrieval — Read Only Profile

Technologies de l'information — Profils normalisés internationaux ADFnn — Classement et recherche documentaire (DFR) —

Partie 3: ADF11 — Classement et recherche documentaire courants — Profil à lecture morte

Reference number
ISO/IEC ISP 12069-3:1996(E)

Copyright International Organization for Standardization
Provided by IHS under license with ISO
No reproduction or networking permitted without license from IHS
Not for Resale

Contents

1. Scope
1.1 General 1
1.2 Position within the taxonomy 1
1.3 Scenario 1

2. Normative references 2

3. Definitions 2

4. Abbreviations 2

5. Conformance 2

6. Constraints supported by ADF11 2
6.1 Support Classification 3
6.2 Support classification of service 3

Annex A: Profile Requirements List for ISO/IEC ISP 12069 Part 3 4

© ISO/IEC 1996

All rights reserved. Unless otherwise specified, no part of this publication may be reproduced or utilized in any form or by any means, electronic or mechanical, including photocopying and microfilm, without permission in writing from the publisher.

ISO/IEC Copyright Office • Case postale 56 • CH-1211 Genève 20 • Switzerland

Printed in Switzerland

Copyright International Organization for Standardization
Provided by IHS under license with ISO
No reproduction or networking permitted without license from IHS
Not for Resale

Foreword

ISO (the International Organization for Standardization) and IEC (the International Electrotechnical Commission) form the specialized system for worldwide standardization. National bodies that are members of ISO or IEC participate in the development of International Standards through technical committees established by the respective organization to deal with particular fields of technical activity. ISO and IEC technical committees collaborate in fields of mutual interest. Other international organizations, governmental and non-governmental, in liaison with ISO and IEC, also take part in the work.

In the field of information technology, ISO and IEC have established a joint technical committee, ISO/IEC JTC 1. In addition to developing International Standards, ISO/IEC JTC 1 has created a Special Group on Functional Standardization for the elaboration of International Standardized Profiles.

An International Standardized Profile is an internationally agreed, harmonized document which indentifies a standard or group of standards, together with options and parameters, necessary to accomplish a function or a set of functions.

Draft International Standardized Profiles are circulated to national bodies for voting. Publication as an International Standardized Profile requires approval by at least 75 % of the national bodies casting a vote.

International Standardized Profile ISO/IEC ISP 12069-3 was prepared with the collaboration of

— Asia-Oceania Workshop (AOW);

— European Workshop for Open Systems (EWOS);

— Open Systems Environment Implementors' Workshop (OIW).

ISO/IEC ISP 12069 consists of the following parts, under the general title *Information technology — International Standardized Profiles ADFnn — Document Filing and Retrieval (DFR)*:

— *Part 1: Introduction to the DFR ISP*

— *Part 2: Specification of ROSE, RTSE, ACSE, Presentation and Session protocols for use by DFR*

— *Part 3: ADF11 — Common Document Filing and Retrieval — Read Only Profile*

Annex A forms an integral part of this part of ISO/IEC ISP 12069.

Copyright International Organization for Standardization
Provided by IHS under license with ISO
No reproduction or networking permitted without license from IHS Not for Resale

Information technology — International Standardized Profiles ADFnn — Document Filing and Retrieval (DFR) —

Part 3:

ADF11 — Common Document Filing and Retrieval — Read Only Profile

1 Scope

1.1 General

This part of ISO/IEC ISP 12069 contains the overall specifications of the support of document filing and retrieval functionality between a DFR user and a DFR server using DFR access protocol. These specifications form the read only capability of Common Document Filing and Retrieval application functions.
For this part of ISO/IEC ISP 12069, specifications defined in ISO/IEC ISP 12069 Part 1 apply.

1.2 Position within the taxonomy

This part of ISO/IEC ISP 12069 is the third part of the DFR ISPs. The structure of DFR ISPs are described in ISO/IEC ISP 12069 Part 1.
It may be combined with any T-Profiles (see ISO/IEC TR 10000) specifying the OSI connection-mode Transport service.

1.3 Scenario

The model used is one of a DFR user and a DFR server intercommunicating using the ADF11 Profile of DFR protocol, as shown in figure 1.

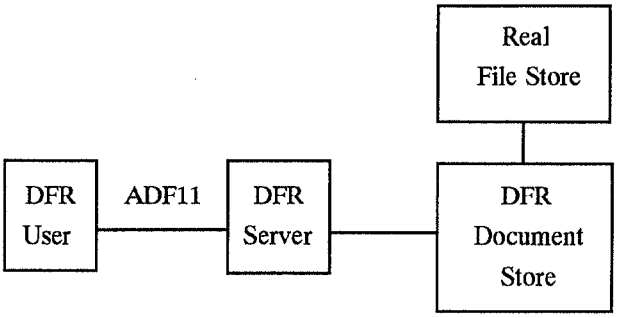

Figure 1 - ADF11 scenario

Copyright International Organization for Standardization
Provided by IHS under license with ISO
No reproduction or networking permitted without license from IHS
Not for Resale

2 Normative references

The following documents contain provisions which, through reference in this text, constitute provisions of this part of ISO/IEC ISP 12069. At the time of publication, the editions indicated were valid. All documents are subject to revision and parties to agreements based on this part of ISO/IEC ISP 12069 are warned against automatically applying any more recent editions of the documents listed below, since the nature of references made by ISPs to such documents is that they may be specific to a particular edition. Members of IEC and ISO maintain registers of currently valid International Standards and ISPs, and ITU-T maintains published editions of its current Recommendations.

ISO/IEC ISP 12069-1: 1996,
Information technology — International Standardized Profile ADFnn — Document Filing and Retrieval (DFR) — Part 1: Introduction to the DFR ISP.

ISO/IEC ISP 12069-2: 1996,
Information technology — International Standardized Profile ADFnn — Document Filing and Retrieval (DFR) — Part 2: Specification of ROSE, RTSE, ACSE, Presentation and Session protocols for use by DFR.

3 Definitions

For the purposes of this part of ISO/IEC ISP 12069, the definitions given in ISO/IEC ISP 12069-1 and ISO/IEC ISP 12069-2 apply.

4 Abbreviations

The abbreviations specified in ISO/IEC ISP 12069-1 and ISO/IEC ISP 12069-2 apply.

5 Conformance

This part of ISO/IEC ISP 12069 states requirements upon implementation to achieve interworking. A claim of conformance to this ADF11 is a claim that all requirements in the relevant base standards and recommendations are satisfied, that all the requirements in ISO/IEC ISP 12069-1 and ISO/IEC ISP 12069-2 are satisfied, and that all requirements in clause 6 and annex A of this part of ISO/IEC ISP 12069 are satisfied.

6 Constraints supported by ADF11

This clause describes the characteristics which are supported by this part of ISO/IEC ISP 12069.
The specifications of annex A are required for applications conforming to ADF11.

Copyright International Organization for Standardization
Provided by IHS under license with ISO
No reproduction or networking permitted without license from IHS Not for Resale

6.1 Support Classification

For this part of ISO/IEC ISP 12069, the constraints provided in ISO/IEC ISP 12069-1: 1996, 3.2 apply.

6.2 Support classification of service

The support classification for each operation in this part of ISO/IEC ISP 12069 is described in Table 1.

Table 1- Support classification for DFR Operations

Operation	Support classification
DfrBind	**m**
DfrUnbind	**m**
Create	**i**
Delete	**i**
Copy	**i**
Move	**i**
Read	**m**
Modify	**i**
List	**m**
Search	**m**
Reserve	**i**
Abandon	**o**

Support classification:

m: mandatory;

o: optional;

i: out of scope

Copyright International Organization for Standardization
Provided by IHS under license with ISO
No reproduction or networking permitted without license from IHS
Not for Resale

Annex A
(normative)
Profile Requirements List for this part of ISO/IEC ISP 12069

In the event of a discrepancy becoming apparent in the body of ISO/IEC ISP 12069 parts 1, 2 and 3 and table A.1 in this annex, this annex is to take precedence.

This annex specifies the support constraints and characteristics of ISO/IEC ISP 12069 on what shall or may appear in the implementation of ADF11.

In each table, The "Static client" means static capability required for ADF11 user implementation. The "Static server" means static capability required for ADF11 server implementation. The "Dynamic" means dynamic behavior between ADF11 user and server implementation.

NOTES

1 "ENUMERATED" in the base standard is noted here as "CHOICE" for explanatory purpose.

2 To clarify relationship between tables, temporary data types are introduced in this part of ISO/IEC ISP 12069 when complex parameters are defined in the base standard without defying corresponding data types.

Table A.1 defines specific conditions that are used to determine the conditional support classifications.

Copyright International Organization for Standardization
Provided by IHS under license with ISO
No reproduction or networking permitted without license from IHS Not for Resale

Table A.1- Specific Conditions

Symbol	Condition	Support classification	
		TRUE	FALSE
p1	The Argument exists, and the Result or the Error corresponding to the Argument exists.	**m2**	x
p2	The Operation encounters a limit.	**m2**	x
p3	Access rights is implemented and the Error exists.	**m2**	x
p4	The Error which isn't specified in this document exists.	**m2**	x
p5	Pathname, Reference, or Access rights is implemented.	**m2**	x
p6	The Contents exists.	**m2**	x
PA	Function Group Abandon is implemented.	**m2**	x
PV	Function Group Version is implemented.	**m2**	x
PD	Function Group use of DOR is implemented.	**m2**	x
PS	Function Group Security is implemented.	**m2**	x

NOTE- This table defines symbols to be used for the explanatory remarks.
For each symbol (**p1**, **p2**, etc.) indicated in this table, each implementation may individually select the value "TRUE" or "FALSE". If "TRUE" is selected the value of dynamic support classification should be replaced by the value specified in "TRUE" column. Otherwise, the value of dynamic support classification should be replaced by the value specified in "FALSE" column.

A.1 DfrBind

This clause specifies restrictions on the DfrBind operation.

Copyright International Organization for Standardization
Provided by IHS under license with ISO
No reproduction or networking permitted without license from IHS Not for Resale

A.1.1 DfrBindArgument Parameters

This subclause specifies restrictions on the arguments used in the invocation of the DfrBind operation.

Element	Data Type	Default	Static Client	Static Server	Dynamic	Comments
DfrBindArgument [SEQUENCE]						
initiator-name	Distinguished Name	-	**m**	**m**	**m1**	[cf. ISO/IEC 9594-2]
credentials	Credentials	-	**m**	**m**	**m1**	see A.1.1.1
retrieve-restrictions	Restrictions	-	**o**	**m**	**c1**	see A.1.1.2
dfr-configuration request	BOOLEAN	FALSE	**o**	**m**	**c1**	TRUE or FALSE
bind-security	EXTERNAL	-	**o**	**o**	**c1 (PS)**	-
priority	ENUMERATED	1	**o**	**m**	**c1**	0 or 1 or 2 (1 octet)
dor-for-produce-operations	BOOLEAN	TRUE	**o**	**o**	**c1 (PD)**	TRUE or FALSE
dor-for-consume operations	BOOLEAN	TRUE	**o**	**o**	**c1 (PD)**	TRUE or FALSE
protocol-version	INTEGER	1	**o**	**o**	**c1**	1 or 2 (1 octet)
bilateral Information	SEQUENCE OF Bilateral Information Entry	-	**o**	**o**	**c1**	see A.1.1.3

Copyright International Organization for Standardization
Provided by IHS under license with ISO
No reproduction or networking permitted without license from IHS Not for Resale

Element	Data Type	Default	Static Client	Static Server	Dynamic	Comments
dTAM-manipulation-capabilities	Manipulation Capabilities	-	-	-	x	[cf. ITU-T Rec. T.435]
dTAM-protocol-version	BITSTRING	-	-	-	x	-
dfr-profile-selection	OBJECT IDENTIFIER	-	o	m	c1	-
application-requirements	Application Requirement	-	o	o	c1	OCTED STRING or OBJECT IDENTIFIER

A.1.1.1 Credentials

This subclause specifies restrictions on the "Credentials" parameter.

Element	Data Type	Default	Static Client	Static Server	Dynamic	Comments
Credentials [CHOICE]						
simple	OCTET STRING	-	m	m	m2	max 128 octets
certified	EXTERNAL	-	o	o	c1 (PS)	-

Copyright International Organization for Standardization
Provided by IHS under license with ISO
No reproduction or networking permitted without license from IHS Not for Resale

A.1.1.2 Restrictions

This subclause specifies restrictions on "Restrictions" parameter.

Element	Data Type	Default	Static Client	Static Server	Dynamic	Comments
Restrictions [SET]						
allowed-document-types	SET OF OBJECT IDENTIFIER	-	o	o	c1	-
maximum-length	INTEGER	-	o	o	c1	512 or more

A.1.1.3 BilateralInformationEntry

This subclause specifies restrictions on "BilateralInformationEntry" parameter.

Element	Data Type	Default	Static Client	Static Server	Dynamic	Comments
BilateralInformationEntry [SEQUENCE]						
serverName	Distinguished Name	-	m	m	m1	[cf. ISO/IEC 9594]
information	EXTERNAL	-	m	m	m1	-

Copyright International Organization for Standardization
Provided by IHS under license with ISO
No reproduction or networking permitted without license from IHS Not for Resale

A.1.2 DfrBindResult Parameters

This subclause specifies restrictions on the result parameters of the DfrBind operation.

Element	Data Type	Default	Static Client	Static Server	Dynamic	Comments
DfrBindResult [SET]						
authentication-attributes	SET OF EXTERNAL	-	o	o	c1 (PS)	-
constraints-supported	ConstraintsType	-	c	m	c2 (p1)	see A.1.2.1
dfr-document-types-supported	SET OF TypeAnd Attribute	-	c	m	c2 (p1)	see A.1.2.2
function-set-supported	INTEGER	-	c	m	c2 (p1)	1 or 2 or 3 (1 octet)
maximum-length-supported	INTEGER	-	c	m	c2 (p1)	512 or more
dor-for-produce-operations	BOOLEAN	TRUE	o	o	c1 (PD)	TRUE or FALSE
dor-for-consume operations	BOOLEAN	TRUE	o	o	c1 (PD)	TRUE or FALSE
rOA-protocols-accessee	SEQUENCE OF OBJECT IDENTIFIER	-	o	o	c1 (PD)	-
rOA-protocols-accessor	SEQUENCE OF OBJECT IDENTIFIER	-	o	o	c1 (PD)	-
bilateral Information	SEQUENCE OF Bilateral Information ENTRY	-	o	o	c1 (p1)	see A.1.1.3
server-selected-protocol-version	INTEGER	-	c	m	c2 (p1)	1 or 2 (1 octet)

Copyright International Organization for Standardization
Provided by IHS under license with ISO
No reproduction or networking permitted without license from IHS Not for Resale

Element	Data Type	Default	Static Client	Static Server	Dynamic	Comments
server-selected-dTAM-capabilities	SEQUENCE OF OdaApplication Capabilities	-	-	-	x	[cf. ITU-T Rec. T.435]
server-selected-dTAM-protocol-version	BITSTRING	-	-	-	x	-

A.1.2.1 ConstraintsType

This subclause specifies restrictions on the "ConstraintsType" parameter.

Element	Data Type	Default	Static Client	Static Server	Dynamic	Comments
ConstraintsType [SEQUENCE]						
name-constraint	ENUMERATED	-	**m**	**m**	**m1**	0 or 1 or 2 (1 octet)
version-constraint	ENUMERATED	-	**m**	**m**	**m1 (PV)**	0 or 1 or 2 (1 octet)
profile-supported	SEQUENCE OF OBJECT IDENTIFIER	-	**o**	**o**	**m1**	-

Copyright International Organization for Standardization
Provided by IHS under license with ISO
No reproduction or networking permitted without license from IHS Not for Resale

A.1.2.2 TypeAndAttribute

This subclause specifies restrictions on the "TypeAndAttribute" parameter.

Element	Data Type	Default	Static Client	Static Server	Dynamic	Comments
TypeAndAttribute [SEQUENCE]						
document-types	OBJECT IDENTIFIER	-	**m**	**m**	**m1**	-
attributes	SET OF AttributeType	-	**m**	**m**	**m1**	[cf. ISO/IEC 9594]

A.1.3 DfrBindError Parameters

This subclause specifies restrictions on the result error of the DfrBind operation.

Element	Data Type	Default	Static Client	Static Server	Dynamic	Comments
DfrBindError [CHOICE]						
service-error	ServiceError	-	**m**	**m**	**m2**	see A.13.6
security-error	SecurityError	-	**m**	**m**	**m2**	see A.13.5
dtam-dm-error	Manipulation Problem	-	-	-	**x**	-

Copyright International Organization for Standardization
Provided by IHS under license with ISO
No reproduction or networking permitted without license from IHS
Not for Resale

A.2 DfrUnbind

This clause specifies restrictions on the DfrUnbind operation.

A.2.1 DfrUnbindArgument Parameters

None.

A.2.2 DfrUnbindResult Parameters

None.

A.2.3 DfrUnbindError Parameters

None.

A.3 Create

This operation is not supported by this profile.

A.4 Delete

This operation is not supported by this profile.

A.5 Copy

This operation is not supported by this profile.

A.6 Move

This operation is not supported by this profile.

A.7 Read

This clause specifies restrictions on the Read operation.

Copyright International Organization for Standardization
Provided by IHS under license with ISO
No reproduction or networking permitted without license from IHS Not for Resale

A.7.1 ReadArgument Parameters

This subclause specifies restrictions on the arguments used in the invocation of the Read operation.

Element	Data Type	Default	Static Client	Static Server	Dynamic	Comments
ReadArgument [SEQUENCE]						
CommonUpdateArguments						
object-class	DfrObjectClass	-	o	o	cl	see A.7.1.7
entry	Entry	-	m	m	ml	see A.7.1.1
destination	DfrEntryName	-	-	-	x	see A.7.1.2
position	GroupMember Position	-	-	-	x	-
modification	SEQUENCE OF Entry Modification	-	-	-	x	-
selection	EntryInformation Selection	-	m	m	ml	see A.7.1.5
reference-qos	Requested-QoS-Level	-	o	o	cl (PD)	[cf. ISO/IEC 10031-2]
deferencing	BOOLEAN	FALSE	o	m	cl	TRUE or FALSE
token	Token	-	o	o	cl (PD)	[cf. ISO/IEC 10031-2]

Copyright International Organization for Standardization
Provided by IHS under license with ISO
No reproduction or networking permitted without license from IHS Not for Resale

Element	Data Type	Default	Static Client	Static Server	Dynamic	Comments
CommonArguments						
task-id	OCTET STRING	-	o	o	cl (PA)	max 16 octets
reservation	Reservation	-	i	i	x	-
error-handling	ErrorHandling Mode	-	-	-	x	see A.9.1.4
priority	ENUMERATED	1	o	m	cl	0 or 1 or 2 (1 octet)
privileges	Privileges	-	o	o	cl (PS)	see A.7.1.9

NOTE: The Entry data type is not defined in the base standards, but it is aligned with the specification of the entry parameter in the base standard.

A.7.1.1 Entry

This subclause specifies restrictions on the "Entry" parameter.

Element	Data Type	Default	Static Client	Static Server	Dynamic	Comments
Entry [CHOICE]						
local	DfrEntryName	-	m	m	ml	see A.7.1.2
external	DOR	-	o	o	cl (PD)	[cf. ISO/IEC 10031-2]

Copyright International Organization for Standardization
Provided by IHS under license with ISO
No reproduction or networking permitted without license from IHS Not for Resale

A.7.1.2 DfrEntryName

This subclause specifies restrictions on the "DfrEntryName" parameter.

Element	Data Type	Default	Static Client	Static Server	Dynamic	Comments
DfrEntryName [CHOICE]						
upi	OCTET STRING	-	m	m	m2	max 32 octets
path-name	DfrPathName	-	m	m	m2	max 1024 octets see A.7.1.3
relative-path-name	SEQUENCE { base: OCTET STRING path: DfrPathName }	-	o	o	c1	max 1024 octets see A.7.1.3

A.7.1.3 DfrPathName

This subclause specifies restrictions on the "DfrPathName" parameter.

Element	Data Type	Default	Static Client	Static Server	Dynamic	Comments
DfrPathName [SEQUENCE]						
DfrTitle	CharacterData	-	**m**	**m**	**m1**	max 256 octets see A.7.1.4

Copyright International Organization for Standardization
Provided by IHS under license with ISO
No reproduction or networking permitted without license from IHS
Not for Resale

A.7.1.4 CharacterData

This subclause specifies restrictions on the "CharacterData" parameter.

Element	Data Type	Default	Static Client	Static Server	Dynamic	Comments
CharacterData [CHOICE]						
GraphicString	GraphicString	-	c	c	c2	cf. ISO/IEC 8824
T61String	GraphicString	-	m	m	m2	cf. ISO/IEC 8824
PrintableString	PrintableString	-	c	c	c2	cf. ISO/IEC 8824
GeneralString	GeneralString	-	c	c	c2	cf. ISO/IEC 8824

Copyright International Organization for Standardization
Provided by IHS under license with ISO
No reproduction or networking permitted without license from IHS Not for Resale

A.7.1.5 EntryInformationSelection

This subclause specifies restrictions on the "EntryInformationSelection" parameter.

Element	Data Type	Default	Static Client	Static Server	Dynamic	Comments
EntryInformationSelection [SEQUENCE]						
read-selector	INTEGER	0	**m**	**m**	**m2**	0 or 1 or 2 or 3 or 4 or 5 or 6 or 7 or 8 or 9 (1 octet) see Note
attribute-selection	Attribute Selection	-	**o**	**o**	**c1**	see A.7.1.6
content-selection	ContentSelection	-	**o**	**o**	**c1**	see A.7.1.8

Copyright International Organization for Standardization
Provided by IHS under license with ISO
No reproduction or networking permitted without license from IHS Not for Resale

A.7.1.6 AttributeSelection

This subclause specifies restrictions on the "AttributeSelection" parameter.

Element	Data Type	Default	Static Client	Static Server	Dynamic	Comments
AttributeSelection [CHOICE]						
all	NULL	-	**m**	**m**	**m2**	-
none	NULL	-	**m**	**m**	**m2**	-
unordered	SET OF AttributeType	-	**m**	**m**	**m2**	[cf. ISO/IEC 9594]
ordered	SEQUENCE OF AttributeType	-	**m**	**m**	**m2**	[cf. ISO/IEC 9594]
minimum	NULL	-	**m**	**m**	**m2**	-

Copyright International Organization for Standardization
Provided by IHS under license with ISO
No reproduction or networking permitted without license from IHS Not for Resale

A.7.1.7 DfrObjectClass

This subclause specifies restrictions on the "DfrObjectClass" parameter.

Element	Data Type	Default	Static Client	Static Server	Dynamic	Comments
DfrObjectClass [ENUMERATED]						
dfr-document	ENUMERATED	-	**m**	**m**	**m2**	0
dfr-root-group	ENUMERATED	-	**m**	**m**	**m2**	1
dfr-proper-group	ENUMERATED	-	**o**	**o**	**c1**	2
dfr-reference	ENUMERATED	-	**o**	**o**	**c1**	3
dfr-search-result-list	ENUMERATED	-	i	i	x	-

A.7.1.8 ContentSelection

This subclause specifies restrictions on the "ContentSelection" parameter.

Element	Data Type	Default	Static Client	Static Server	Dynamic	Comments
ContentSelection [SEQUENCE]						
content-server-id	DistinguishedName	-	**m**	**m**	**m1**	[cf. ISO/IEC 9594-2]
content-selection-parameter	EXTERNAL	-	**m**	**m**	**m1**	-

Copyright International Organization for Standardization
Provided by IHS under license with ISO
No reproduction or networking permitted without license from IHS Not for Resale

A.7.1.9 Privileges

This subclause specifies restrictions on the "Privileges" parameter.

Element	Data Type	Default	Static Client	Static Server	Dynamic	Comments
Privileges [SEQUENCE]						
Privileges	EXTERNAL	-	o	o	c1 (PS)	-

Copyright International Organization for Standardization
Provided by IHS under license with ISO
No reproduction or networking permitted without license from IHS Not for Resale

A.7.2 ReadResult Parameters

This subclause specifies restrictions on the result parameters of the Read operation.

Element	Data Type	Default	Static Client	Static Server	Dynamic	Comments
ReadResult [SEQUENCE]						
CommonUpdateResult						
upi	OCTET STRING	-	**m**	**m**	**m1**	max 32 octets
entry-information	EntryInformation	-	**m**	**m**	**m1**	see A.7.2.1
warnings	SEQUENCE OF Warning	{ }	-	-	x	-
continuation	OCTET STRING	-	-	-	x	-
reference-qos	Quality-of-Service	-	**o**	**o**	**c1 (PD)**	[cf. ISO/IEC 10031-2]
referent-altered	ENUMERATED	-	i	i	x	-

Copyright International Organization for Standardization
Provided by IHS under license with ISO
No reproduction or networking permitted without license from IHS Not for Resale

A.7.2.1 EntryInformation

This subclause specifies restrictions on the "EntryInformation" parameter.

Element	Data Type	Default	Static Client	Static Server	Dynamic	Comments
EntryInformation [CHOICE]						
attributes-only	SET OF Attribute	-	**m**	**m**	**m2**	[cf. ISO/IEC 9594]
attributes-and-content	DfrEntry	-	**m**	**m**	**m2**	see A.7.2.2
content-only	DfrObject Content	-	**m**	**m**	**m2**	see A.7.2.3
dor-to-attr-only	DOR	-	**o**	**o**	**c1 (PD)**	[cf. ISO/IEC 10031-2]
attr-and-dor-to-content	SEQUENCE { attributes: SET OF Attribute dor-to-content-only: DOR}	-	**o**	**o**	**c1 (PD)**	[cf. ISO/IEC 9594 and 10031-2]
dor-to-content-only	DOR	-	**o**	**o**	**c1 (PD)**	[cf. ISO/IEC 10031-2]
dor-to-entire-object	DOR	-	**o**	**o**	**c1 (PD)**	[cf. ISO/IEC 10031-2]
attr-and-dor-to-entire-object	SEQUENCE { attributes: SET OF Attribute dor-to-entire-object: DOR}	-	**o**	**o**	**c1 (PD)**	[cf. ISO/IEC 9594 and 10031-2]
attributes-and-part-of-content	DfrEntry	-	**m**	**m**	**m2**	see A.7.2.2
part-of-content-only	DfrObject cContent	-	**m**	**m**	**m2**	see A.7.2.2

Copyright International Organization for Standardization
Provided by IHS under license with ISO
No reproduction or networking permitted without license from IHS Not for Resale

A.7.2.2 DfrEntry

This subclause specifies restrictions on the "DfrEntry" parameter.

Element	Data Type	Default	Static Client	Static Server	Dynamic	Comments
DfrEntry [SEQUENCE]						
attributes	SET OF Attribute	-	**m**	**m**	**m1**	[cf. ISO/IEC 9594]
content	DfrObject Content	-	**o**	**m**	**c1**	see A.7.2.3

A.7.2.3 DfrObjectContent

This subclause specifies restrictions on the "DfrObjectContent" parameter.

Element	Data Type	Default	Static Client	Static Server	Dynamic	Comments
DfrObjectContent [CHOICE]						
document-content	EXTERNAL	-	**m**	**m**	**m2**	-
root-group-content	SEQUENCE OF OCTET STRING	-	-	-	x	-
proper-group-content	SEQUENCE OF OCTET STRING	-	-	-	x	-
reference-content	DOR	-	**o**	**o**	**c1 (PD)**	-
search-result-list-content	DfrSearchResult ListContent	-	-	-	x	-

Copyright International Organization for Standardization
Provided by IHS under license with ISO
No reproduction or networking permitted without license from IHS Not for Resale

A.7.3 Errors

This subclause specifies restrictions on the result error of the Read operation.

Element	Data Type	Default	Static Client	Static Server	Dynamic	Comments
Errors [CHOICE]						
Abandoned	Abandoned	-	i	i	x	see A.13.8
AccessError	AccessError	-	m	m	m2	see A.13.3
InterServer AccessError	-	-	i	i	x	-
NameError	NameError	-	m	m	m2	see A.13.2
Referent AccessError	ReferentAccess Error	-	m	m	m2	see A.13.4
Reservation Error	-	-	i	i	x	-
SecurityError	SecurityError	-	o	o	c1 (PS)	see A.13.5
ServiceError	ServiceError	-	m	m	m2	see A.13.6

A.8 Modify

This operation is not supported by this profile.

A.9 List

This clause specifies restrictions on the List operation.

Copyright International Organization for Standardization
Provided by IHS under license with ISO
No reproduction or networking permitted without license from IHS Not for Resale

A.9.1 ListArgument Parameters

This subclause specifies restrictions on the arguments used in the invocation of the List operation.

Element	Data Type	Default	Static Client	Static Server	Dynamic	Comments
ListArgument [SEQUENCE]						
entry	DfrEntryName	-	**m**	**m**	**m1**	see A.7.1.2
CommonListSearchArguments						
continue	BOOLEAN	FALSE	**o**	**m**	**c1**	TRUE or FALSE
limits	Limits	-	**o**	**m**	**c1**	see A.9.1.1
selection	Attribute Selection	-	**m**	**m**	**m1**	see A.7.1.6
ordering	OrderingRule	-	**o**	**m**	**c1**	see A.9.1.2
CommonArguments						
task-id	OCTET STRING	-	**o**	**o**	**c1 (PA)**	max 16 octets
reservation	Reservation	-	**i**	**i**	**x**	-
error-handling	ErrorHandling Mode	all-or-nothing	**o**	**m**	**c1**	all-or-nothing: NULL see A.9.1.4
priority	ENUMERATED	1	**o**	**m**	**c1**	0 or 1 or 2
privileges	EXTERNAL	-	**o**	**o**	**c1 (PS)**	see A.1.9

Copyright International Organization for Standardization
Provided by IHS under license with ISO
No reproduction or networking permitted without license from IHS Not for Resale

A.9.1.1 Limits

This subclause specifies restrictions on the "Limits" parameter.

Element	Data Type	Default	Static Client	Static Server	Dynamic	Comments
Limits [SEQUENCE]						
time-limit	INTEGER	-	-	-	x	-
count-limit	INTEGER	-	o	m	c1	1 or more (max 4 octets)

A.9.1.2 OrderingRule

This subclause specifies restrictions on the "OrderingRule" parameter.

Element	Data Type	Default	Static Client	Static Server	Dynamic	Comments
OrderingRule [SET]						
list-attributes	BOOLEAN	FALSE	m	m	m1	TRUE or FALSE
ordering-attributes	Ordering Attributes	-	m	m	m1	One pair: minimum requirements see A.9.1.3

Copyright International Organization for Standardization
Provided by IHS under license with ISO
No reproduction or networking permitted without license from IHS Not for Resale

A.9.1.3 OrderingAttributes

This subclause specifies restrictions on the "OrderingAttributes" parameter.

Element	Data Type	Default	Static Client	Static Server	Dynamic	Comments
OrderingAttributes [SEQUENCE OF SEQUENCE]						
attribute	AttributeType	-	**m**	**m**	**m1**	[cf. ISO/IEC 9594]
direction	ENUMERATED	-	**m**	**m**	**m1**	0 or 1

A.9.1.4 ErrorHandlingMode

This subclause specifies restrictions on the "ErrorHandlingMode" parameter.

Element	Data Type	Default	Static Client	Static Server	Dynamic	Comments
ErrorHandlingMode [CHOICE]						
all-or-nothing	NULL	-	**m**	**m**	**m1**	-
until-first-warning	NULL	-	**i**	**i**	**x**	-
report-all-warnings	NULL	-	**i**	**i**	**x**	-
report-n-warnings	INTEGER	-	**i**	**i**	**x**	-

Copyright International Organization for Standardization
Provided by IHS under license with ISO
No reproduction or networking permitted without license from IHS
Not for Resale

A.9.2 ListResult Parameters

This subclause specifies restrictions on the result parameters of the List operation.

Element	Data Type	Default	Static Client	Static Server	Dynamic	Comments
ListResult [SEQUENCE]						
CommonListSearchResult						
number-of-entries	INTEGER	-	**m**	**m**	**m1**	0 or more (max 4 octets)
limit-encountered	ENUMERATED	-	**o**	**m**	**c1 (p2)**	1 or 2
entry-list	DfrEntryList	-	**m**	**m**	**m1**	see A.9.2.1
warnings	SEQUENCE OF Warning	{ }	**m**	**m**	**m2**	-
continuation	OCTET STRING	-	**o**	**m**	**c1**	max 16 octets
start-date-and-time	GeneralizedTime	-	**o**	**m**	**c1**	-
end-date-and-time	GeneralizedTime	-	**o**	**m**	**c1**	-
ordering	OrderingRule	-	**o**	**m**	**c1**	-
search-domain	SearchDomain	-	**o**	**m**	**c1**	-
search-criteria	SearchCriteria	-	**o**	**m**	**c1**	-

Copyright International Organization for Standardization
Provided by IHS under license with ISO
No reproduction or networking permitted without license from IHS Not for Resale

A.9.2.1 DfrEntryList

This subclause specifies restrictions on the "DfrEntryList" parameter.

Element	Data Type	Default	Static Client	Static Server	Dynamic	Comments
DfrEntryList [SEQUENCE OF SEQUENCE]						
upi	OCTET STRING	-	**m**	**m**	**m1**	max 32 octets
class	DfrObjectClass	-	**m**	**m**	**m1**	see A.7.1.7
ordering-attribute	SEQUENCE OF Attribute	-	**o**	**m**	**c1 (p1)**	-
other-attributes	SEQUENCE OF Attribute	-	**o**	**m**	**c1 (p1)**	[cf. ISO/IEC 9594]

Copyright International Organization for Standardization
Provided by IHS under license with ISO
No reproduction or networking permitted without license from IHS Not for Resale

A.9.3 Error

This subclause specifies restrictions on the result error of the List operation.

Element	Data Type	Default	Static Client	Static Server	Dynamic	Comments
Error [CHOICE]						
Abandoned	Abandoned	-	**m**	**m**	**m2**	see A.13.8
AccessError	AccessError	-	**m**	**m**	**m2**	see A.13.3
AttributeError	AttributeError	-	**m**	**m**	**m2**	see A.13.1
NameError	NameError	-	**m**	**m**	**m2**	see A.13.2
Reservation Error	-	-	**i**	**i**	x	-
SecurityError	SecurityError	-	**i**	**i**	x	see A.13.5
ServiceError	ServiceError	-	**m**	**m**	**m2**	see A.13.6

A.10 Search

This clause specifies restrictions on the Search operation.

Copyright International Organization for Standardization
Provided by IHS under license with ISO
No reproduction or networking permitted without license from IHS Not for Resale

A.10.1 SearchArgument Parameters

This subclause specifies restrictions on the arguments used in the invocation of the DfrBind operation.

Element	Data Type	Default	Static Client	Static Server	Dynamic	Comments
SearchArgument [SEQUENCE]						
search-mode	SearchMode	-	**m**	**m**	**m1**	NULL: non-stored-search see A.10.1.1
CommonListSearchArguments						
continue	BOOLEAN	FALSE	**o**	**m**	**c1**	TRUE or FALSE
limits	Limits	-	**o**	**m**	**c1**	see A.10.1.2
selection	Attribute Selection	-	**o**	**m**	**c1**	see A.7.1.6
ordering	OrderingRule	-	**o**	**m**	**c1**	see A.9.1.2
search-domain	SearchDomain	-	**o**	**m**	**c1**	see A.10.1.3
search-criteria	SearchCriteria	-	**m**	**m**	**m1**	[cf. ISO/IEC 9594-3]
search-server	SearchServer	-	i	i	x	-
search-limit	SearchLimit	-	**o**	**m**	**c1**	see A.10.1.5

Copyright International Organization for Standardization
Provided by IHS under license with ISO
No reproduction or networking permitted without license from IHS Not for Resale

Element	Data Type	Default	Static Client	Static Server	Dymanic	Comments
CommonArguments						
task-id	OCTET STRING	-	o	o	cl (PA)	max. 16 octets
reservation	Reservation	-	i	i	x	-
error-handling	ErrorHandling Mode	-	i	i	x	-
priority	ENUMERATED	1	o	m	cl	0 or 1 or 2 (1 octet)
privileges	EXTERNAL	-	o	o	cl (PS)	see A.7.1.9

Copyright International Organization for Standardization
Provided by IHS under license with ISO
No reproduction or networking permitted without license from IHS
Not for Resale

A.10.1.1 SearchMode

This subclause specifies restrictions on the "SearchMode" parameter.

Element	Data Type	Default	Static Client	Static Server	Dynamic	Comments
SearchMode [CHOICE]						
continue	DfrEntryName	-	i	i	x	see A.7.1.2
update	DfrEntryName	-	i	i	x	see A.7.1.2
new-search-stored	DfrEntryName	-	i	i	x	see A.7.1.2
non-stored-search	NULL	-	m	m	m1	-

A.10.1.2 Limits

This subclause specifies restrictions on the "Limits" parameter.

Element	Data Type	Default	Static Client	Static Server	Dynamic	Comments
Limits [SEQUENCE]						
time-limit	INTEGER	-	o	m	c1	1 or more [seconds] (max. 2G-1)
count-limit	INTEGER	-	o	m	c1	1 or more (max. 2G-1)

Copyright International Organization for Standardization
Provided by IHS under license with ISO
No reproduction or networking permitted without license from IHS Not for Resale

A.10.1.3 SearchDomain

This subclause specifies restrictions on the "SearchDomain" parameter.

Element	Data Type	Default	Static Client	Static Server	Dynamic	Comments
SearchDomain [SEQUENCE OF CHOICE]						
previous-result	DfrEntryName	-	i	i	x	see A.7.1.2
scope	Scope	-	**m**	**m**	**m1**	-

A.10.1.4 Scope

This subclause specifies restrictions on the "Scope" parameter.

Element	Data Type	Default	Static Client	Static Server	Dynamic	Comments
Scope [SEQUENCE]						
root	DfrEntryName	-	**m**	**m**	**m1**	see A.7.1.2
descent-depth	INTEGER	-	**o**	**m**	**c1**	1: minimum requirements (Max. 127)
dereferencing-depth	INTEGER	-	**m**	**m**	**m2**	-

Copyright International Organization for Standardization
Provided by IHS under license with ISO
No reproduction or networking permitted without license from IHS Not for Resale

A.10.1.5 SearchLimit

This subclause specifies restrictions on the "SearchLimit" parameter.

Element	Data Type	Default	Static Client	Static Server	Dynamic	Comments
SearchLimit [SEQUENCE]						
small-set-upper-limit	INTEGER	-	o	m	c1	1 or more (max. 2G-1)
large-set-lower-limit	INTEGER	-	o	m	c1	1 or more (max. 2G-1)
medium-set-attributes	SET OF Attribute Type	-	o	m	c1	-

Copyright International Organization for Standardization
Provided by IHS under license with ISO
No reproduction or networking permitted without license from IHS Not for Resale

A.10.2 SearchResult

This subclause specifies restrictions on the result parameters of the Search operation.

Element	Data Type	Default	Static Client	Static Server	Dynamic	Comments
SearchResult [SEQUENCE]						
CommonListSearchResult						
number-of-entries	INTEGER	-	**m**	**m**	**m1**	0 or more (max. 2G-1)
limit-encountered	ENUMERATED	-	**o**	**m**	**c1 (p2)**	0 or 1 or 2
entry-list	DfrEntryList	-	**m**	**m**	**m1**	see A.9.2.1
warnings	SEQUENCE OF Warning	{ }	-	-	x	-
continuation	OCTET STRING	-	**o**	**m**	**c1 (p2)**	max. 16 octets
removed-entries	DfrEntryList	-	**i**	**i**	x	-
number-of-hits	ENUMERATED	-	**c**	**m**	**c2 (p1)**	0 or 1
additional-information	SEQUENCE OF AdditionalInformationEntry	-	**i**	**i**	x	-

Copyright International Organization for Standardization
Provided by IHS under license with ISO
No reproduction or networking permitted without license from IHS
Not for Resale

A.10.3 Error

This subclause specifies restrictions on the result error of the Search operation.

Element	Data Type	Default	Static Client	Static Server	Dynamic	Comments
Error [CHOICE]						
Abandoned	Abandoned	-	**m**	**m**	**m2**	see A.13.8
AccessError	AccessError	-	**m**	**m**	**m2**	see A.13.3
AttributeError	AttributeError	-	**m**	**m**	**m2**	see A.13.1
NameError	NameError	-	**m**	**m**	**m2**	see A.13.2
Reservation Error	-	-	**i**	**i**	x	-
SecurityError	SecurityError	-	**i**	**i**	x	see A.13.5
ServiceError	ServiceError	-	**m**	**m**	**m2**	see A.13.6
UpdateError	-	-	**i**	**i**	x	-

A.11 Reserve

This operation is not supported by this profile.

A.12 Abandon

This clause specifies restrictions on the Abandon operation.

Copyright International Organization for Standardization
Provided by IHS under license with ISO
No reproduction or networking permitted without license from IHS Not for Resale

A.12.1 AbandonArgument Parameter

This subclause specifies restrictions on the arguments used in the invocation of the Abandon operation.

Element	Data Type	Default	Static Client	Static Server	Dynamic	Comments
AbandonArgument [SEQUENCE]						
task-id	OCTET STRING	-	**m**	**m**	**m1**	Max. 16 octets
invoke-id	INTEGER	-	i	i	x	-

A.12.2 AbandonResult

NULL

A.12.3 Error

This subclause specifies restrictions on the result error of the Abandon operation.

Element	Data Type	Default	Static Client	Static Server	Dynamic	Comments
Error						
AbandonFailed	AbandonFailed	-	**m**	**m**	**m1**	see A.13.7

Copyright International Organization for Standardization
Provided by IHS under license with ISO
No reproduction or networking permitted without license from IHS Not for Resale

A.13 Error

This clause explains details on the parameters which report errors that have been detected in each operation. In this profile, the parameters for the update error, the access error between servers, and the reservation error are not supported.

The table below shows the list of errors responding to each operation.

	BIND	UNBIND	READ	LIST	SEARCH	ABANDON
AttributeError	-	-	-	m	m	-
NameError	-	-	m	m	m	-
AccessError	-	-	m	m	m	-
UpdateError	-	-	-	-	i	-
ReferentAccessError	-	-	m	-	-	-
InterServerAccessError	-	-	i	-	-	-
ReservationError	-	-	i	i	i	-
VersionManagementError	-	-	-	-	-	-
SecurityError	m	-	o	i	i	-
ServiceError	m	-	m	m	m	-
AbandonFailed	-	-	-	-	-	m
Abandoned	-	-	i	m	m	-
ExternalServerError	-	-	-	-	-	-

Copyright International Organization for Standardization
Provided by IHS under license with ISO
No reproduction or networking permitted without license from IHS Not for Resale

A.13.1 AttributeError

This subclause specifies restrictions on the error for each operation.

Element	Data Type	Default	Static Client	Static Server	Dynamic	Comments
AttributeError [SEQUENCE]						
entry	DfrEntryName	-	**o**	**m**	**c1**	see A.7.1.2
problems	Problems	-	**m**	**m**	**m1**	see A.13.1.1

A.13.1.1 Problems

This subclause specifies restrictions on the "Problems" parameter.

Element	Data Type	Default	Static Client	Static Server	Dynamic	Comments
Problems [SEQUENCE OF SEQUENCE]						
problem	Attribute Problem	-	**m**	**m**	**m1**	see A.13.1.2
type	AttributeType	-	**m**	**m**	**m1**	-
value	AttributeValue	-	**o**	**m**	**c1**	-

Copyright International Organization for Standardization
Provided by IHS under license with ISO
No reproduction or networking permitted without license from IHS Not for Resale

A.13.1.2 AttributeProblem

This subclause specifies restrictions on the "AttributeProblem" parameter.

Element	Data Type	Default	Static Client	Static Server	Dynamic	Comments
AttributeProblem [ENUMERATED]						
no-such-attribute	ENUMERATED	-	**m**	**m**	**m2**	1
invalid-attribute-syntax	ENUMERATED	-	**m**	**m**	**m2**	2
undefined-attribute-type	ENUMERATED	-	**m**	**m**	**m2**	3
inappropriate-matching	ENUMERATED	-	**m**	**m**	**m2**	4
constraint-violation	ENUMERATED	-	**m**	**m**	**m2**	5
attribute-or-value-already-exists	ENUMERATED	-	**i**	**i**	**x**	-
illegal-modification	ENUMERATED	-	**i**	**i**	**x**	-
inconsistent-with-other-attributes	ENUMERATED	-	**i**	**i**	**x**	-
undefined-for-this-object-class	ENUMERATED	-	**o**	**o**	**c1**	9
unsupported-document-type	ENUMERATED	-	**i**	**i**	**x**	-

Copyright International Organization for Standardization
Provided by IHS under license with ISO
No reproduction or networking permitted without license from IHS Not for Resale

A.13.2 NameError

This subclause specifies restrictions on the name error for each operation.

Element	Data Type	Default	Static Client	Static Server	Dynamic	Comments
NameError [SEQUENCE OF SEQUENCE]						
entry	DfrEntryName	-	**m**	**m**	**m1**	see A.7.1.2
problem	NameProblem	-	**m**	**m**	**m1**	see A.13.2.1

A.13.2.1 NameProblem

This subclause specifies restrictions on the "NameProblem" parameter.

Element	Data Type	Default	Static Client	Static Server	Dynamic	Comments
NameProblem [ENUMERATED]						
invalid-upi	ENUMERATED	-	**m**	**m**	**m2**	1
invalid-path-name	ENUMERATED	-	**m**	**m**	**m2**	2
ambiguous-path-name	ENUMERATED	-	**m**	**m**	**m2**	3
inappropriate-object-class	ENUMERATED	-	**m**	**m**	**m2**	4

Copyright International Organization for Standardization
Provided by IHS under license with ISO
No reproduction or networking permitted without license from IHS Not for Resale

A.13.3 AccessError

This subclause specifies restrictions on the access error for each operation.

Element	Data Type	Default	Static Client	Static Server	Dynamic	Comments
AccessError [SEQUENCE OF SEQUENCE]						
entry	DfrEntryName	-	**m**	**m**	**m1**	see A.7.1.2
problem	AccessProblems	-	**m**	**m**	**m1**	see A.13.3.1

A.13.3.1 AccessProblem

This subclause specifies restrictions on the "AccessProblem" parameter.

Element	Data Type	Default	Static Client	Static Server	Dynamic	Comments
AccessProblem [ENUMERATED]						
inappropriate-object-class	ENUMERATED	-	**m**	**m**	**m2**	1
reserved-by-a-user	ENUMERATED	-	**i**	**i**	**x**	-
externally-located-object	ENUMERATED	-	**i**	**i**	**x**	-

Copyright International Organization for Standardization
Provided by IHS under license with ISO
No reproduction or networking permitted without license from IHS Not for Resale

A.13.4 ReferentAccessError

This subclause specifies restrictions on the referent access error for each operation.

Element	Data Type	Default	Static Client	Static Server	Dynamic	Comments
ReferentAccessError [SEQUENCE]						
entry	Entry	-	**m**	**m**	**m1**	see A.7.1.1
problem	ReferentAccess Problem	-	**m**	**m**	**m1**	see A.13.4.1

Copyright International Organization for Standardization
Provided by IHS under license with ISO
No reproduction or networking permitted without license from IHS Not for Resale

A.13.4.1 ReferentAccessProblem

This subclause specifies restrictions on the "ReferentAccessProblem" parameter.

Element	Data Type	Default	Static Client	Static Server	Dynamic	Comments
ReferentAccessProblem [ENUMERATED]						
inappropriate-object-class	ENUMERATED	-	**m**	**m**	**m2**	1
insufficient-access-rights	ENUMERATED	-	**m**	**m**	**m2**	2
reserved-by-a-user	ENUMERATED	-	**i**	**i**	**x**	-
referent-no-longer-exists	ENUMERATED	-	**m**	**m**	**m2**	4
referent-modified	ENUMERATED	-	**i**	**i**	**x**	-
referent-content-empty	ENUMERATED	-	**m**	**m**	**m2**	6

A.13.5 SecurityError

This subclause specifies restrictions on the security error for each operation.

Element	Data Type	Default	Static Client	Static Server	Dynamic	Comments
SecurityError [SEQUENCE]						
problem	SecurityProblem	-	**m**	**m**	**m1**	see A.13.5.1

Copyright International Organization for Standardization
Provided by IHS under license with ISO
No reproduction or networking permitted without license from IHS Not for Resale

A.13.5.1 SecurityProblem

This subclause specifies restrictions on the "SecurityProblem" parameter.

Element	Data Type	Default	Static Client	Static Server	Dynamic	Comments
SecurityProblem [ENUMERATED]						
inappropriate-authentication	ENUMERATED	-	**m**	**m**	**m2**	1
invalid-creds	ENUMERATED	-	**m**	**m**	**m2**	2
invalid-privilege	ENUMERATED	-	**o**	**o**	**c1 (PS)**	3
invalid-pac	ENUMERATED	-	**o**	**o**	**c1 (PS)**	4
already-active	ENUMERATED	-	**m**	**m**	**m2**	5

A.13.6 ServiceError

This subclause specifies restrictions on the service error for each operation.

Element	Data Type	Default	Static Client	Static Server	Dynamic	Comments
ServiceError [SEQUENCE]						
problem	ServiceProblem	-	**m**	**m**	**m1**	see A.13.6.1

Copyright International Organization for Standardization
Provided by IHS under license with ISO
No reproduction or networking permitted without license from IHS Not for Resale

A.13.6.1 ServiceProblem

This subclause specifies restrictions on the "ServiceProblem" parameter.

Element	Data Type	Default	Static Client	Static Server	Dynamic	Comments
ServiceProblem [ENUMERATED]						
server-busy	ENUMERATED	-	**m**	**m**	**m2**	1
server-unavailable	ENUMERATED	-	**m**	**m**	**m2**	2
operation-too-complex	ENUMERATED	-	**m**	**m**	**m2**	3
resource-limit-exceeded	ENUMERATED	-	**m**	**m**	**m2**	4
maximum-length-exceeded	ENUMERATED	-	**m**	**m**	**m2**	5
cannot-continue	ENUMERATED	-	**m**	**m**	**m2**	6
unclassified-server-error	ENUMERATED	-	**m**	**m**	**m2**	7
function-set-violation	ENUMERATED	-	**i**	**i**	**x**	-
too-many-search-hits	ENUMERATED	-	**o**	**m**	**c1 (p2)**	9
profile-mismatch	-	-	**o**	**m**	**c1**	-
application-requirements-mismatch	-	-	**o**	**m**	**c1**	-

Copyright International Organization for Standardization
Provided by IHS under license with ISO
No reproduction or networking permitted without license from IHS Not for Resale

A.13.7 AbandonFailed

This subclause specifies restrictions on the failed error for Abandon operation.

Element	Data Type	Default	Static Client	Static Server	Dynamic	Comments
AbandonFailed [SET]						
problem	AbandonProblem	-	**m**	**m**	**m1**	see A.13.7.1
operation	INTEGER	-	**m**	**m**	**m1**	-

A.13.7.1 AbandonProblem

This subclause specifies restrictions on the "AbandonProblem" parameter.

Element	Data Type	Default	Static Client	Static Server	Dynamic	Comments
AbandonProblem [ENUMERATED]						
no-such-operation	ENUMERATED	-	**o**	**o**	**c1**	1
too-late	ENUMERATED	-	**o**	**o**	**c1 (PA)**	2
cannot-abandon	ENUMERATED	-	**o**	**o**	**c1**	3

A.13.8 Abandoned

No parameters.

Copyright International Organization for Standardization
Provided by IHS under license with ISO
No reproduction or networking permitted without license from IHS Not for Resale

A.13.9 ExternalServerError

This subclause specifies restrictions on the external server error for each operation.

Element	Data Type	Default	Static Client	Static Server	Dynamic	Comments
ExternalServerError [SEQUENCE]						
server-id	Distinguished Name	-	**m**	**m**	**m1**	[cf. ISO/IEC 9594-2]
server-specific-error	EXTERNAL	-	**m**	**m**	**m1**	-

A.13.10 VersionManagementProblem

This subclause specifies restrictions on the version management problem for each operation.

Element	Data Type	Default	Static Client	Static Server	Dynamic	Comments
VersionManagementProblem [SEQUENCE]						
entry	DfrEntryName	-	**m**	**m**	**m1**	see A.13.10.1
problem	Version Management Problem	-	**m**	**m**	**m1**	see A.13.10.1

Copyright International Organization for Standardization
Provided by IHS under license with ISO
No reproduction or networking permitted without license from IHS Not for Resale

A.13.10.1 VersionManagementError

This subclause specifies restrictions on the version management error for each operation.

Element	Data Type	Default	Static Client	Static Server	Dynamic	Comments
VersionManagementError [SEQUENCE]						
inappropriate-object-class	ENUMERATED	-	**m**	**m**	**m2**	1
belongs-to-another-conceptual-document	ENUMERATED	-	**m**	**m**	**m2**	2

A.14 DFR Object Classes

This clause specifies restrictions on DFR-Object-classes.

DFR-Object-Class	Support Classification
dfr-document	**m**
dfr-root-group	**m**
dfr-proper-group	**o**
dfr-reference	**o**
dfr-search-result-list	**i**

A.15 DFR-Attributes

This clause specifies restrictions on DFR-Attributes.

A.15.1 Support Classification

This subclause specifies support classification on DFR-Attributes.

A.15.1.1 DFR-Basic-Attribute-Set

This subclause specifies restrictions on the "DFR-Basic-Attributes".

Copyright International Organization for Standardization
Provided by IHS under license with ISO
No reproduction or networking permitted without license from IHS Not for Resale

Attribute-Type	Support Classification		
	dfr-document	dfr-root-group/ dfr-proper-group	dfr-reference
dfr-upi	m	m	m
dfr-object-class	m	m	m
dfr-document-type	m	-	o
dfr-title	m	m	m
dfr-pathname	m	m	m
dfr-parent-identification	m	m	m
dfr-referent-deleted	-	-	i
dfr-membership-criteria	-	i	-
dfr-ordering	-	o	-
dfr-resource-limit	o	o	o
dfr-resource-used	m	m	m
dfr-number-of-group-members	-	m	-
version-name	c (PV)	-	o
dfr-previous-versions	c (PV)	-	-
dfr-next-versions	c (PV)	-	-
dfr-version-root	c (PV)	-	o
dfr-external-location	i	i	i
user-reference	i	i	i
user-references-to-other-objects	i	i	i
dfr-attributes-create-date-and-time	m	m	m
dfr-content-create-date-and-time	c (P6)	c (P6)	c (P6)
dfr-created-by	m	m	m
dfr-attributes-modify-date-and-time	i	i	i
dfr-content-modify-date-nad-time	i	i	i
afr-attributes-modified-by	i	i	i
dfr-content-modified-by	i	i	i
document-date-and-time	o	-	o
dfr-reservation	i	i	i
dfr-reserved-by	i	i	i
dfr-access-list	c (P5)	c (P5)	c (P5)
valid-user-key	-	i	-
dfr-document-purge-date-and-time	i	i	i

Copyright International Organization for Standardization
Provided by IHS under license with ISO
No reproduction or networking permitted without license from IHS Not for Resale

A.15.1.2 DFR-Extension-Attribute-Set

The DFR extension attribute set is not supported by this profile.

A.15.2 Attribute-Types

This subclause specifies restrictions on "Attribute-Types" parameters.

Attribute-type	Single/Multi-valued	Data Type	Comments
dfr-upi	Single	OCTET STRING	max 32 octets
dfr-object-class	Single	DfrObjectClass	0 or 1 or 2 or 3 (1 octet) see A.7.1.7
dfr-document-type	Single	OBJECT IDENTIFIER	-
dfr-title	Single	CharacterData	max 256 octets see A.7.1.4
dfr-pathname	Single	SEQUENCE OF dfr-title	max 1024 octets
dfr-parent-identification	Single	OCTET STRING	max 32 octets (0 for dfr-root-group)
dfr-ordering	Single	OrderingRule	see A.9.1.2
dfr-resource-limit	Single	INTEGER	1 or more (max 2G-1)
dfr-resource-used	Single	INTEGER	0 or more (max 2G-1)
dfr-number-of-members	Single	INTEGER	0 or more (max 2G-1)
version-name	Single	CharacterData	max 256 octets see A.7.1.4
dfr-previous-versions	Multi	OCTET STRING	(max 32 octets par each value)
dfr-next-versions	Multi	OCTET STRING	(max 32 octets par each value)
dfr-version-root	Single	OCTET STRING	max 32 octets
dfr-attributes-create-date-and-tim	Single	generalizedTimeSyntax	-
dfr-content-create-date-and-time	Single	generalizedTimeSyntax	-
dfr-created-by	Single	DistinguishedName	-
document-date-and-time	Single	generalizedTimeSyntax	-
dfr-access-list	Multi	DfrAccessListElement	see A.15.2.1

Copyright International Organization for Standardization
Provided by IHS under license with ISO
No reproduction or networking permitted without license from IHS Not for Resale

A.15.2.1 DfrAccessListElement

This subclause specifies restrictions on the "DfrAccessListElement" parameter.

Element	Data Type	Default	Support Classification	Comments
DfrAccessListElement [SEQUENCE]				
access-id	DistinguishedName	-	m	[cf. ISO/IEC 9594]
access-rights	AccessRights	-	m	See A.15.2.2

A.15.2.2 AccessRights

This subclause specifies restrictions on the "AccessRights" parameter.

Element	Data Type	Default	Support Classification	Comments
AccessRights [CHOICE]				
read	ENUMERATED	-	**m**	0
extended-read	ENUMERATED	-	**o**	1
read-modify	ENUMERATED	-	**i**	-
read-modify-delet	ENUMERATED	-	**i**	-
owner	ENUMERATED	-	**i**	-

Copyright International Organization for Standardization
Provided by IHS under license with ISO
No reproduction or networking permitted without license from IHS
Not for Resale

© ISO/IEC

ICS 35.100

Descriptors: data processing, information interchange, network interconnection, open systems interconnection, documents, filing, retrieval, protocols, profiles.

Price based on 53 pages

Copyright International Organization for Standardization
Provided by IHS under license with ISO
No reproduction or networking permitted without license from IHS

Not for Resale