INTERNATIONAL STANDARDIZED PROFILE

ISO/IEC ISP 12068-1

First edition
1996-11-01

Information technology — International Standardized Profile FDI 4 — Directory data definitions — Use of the Directory for OSI TP —

Part 1:
FDI 41 — Basic naming and addressing

Technologies de l'information — Profil normalisé international FDI 4 — Définitions des données de l'Annuaire — Emploi de l'Annuaire pour OSI TP —

Partie 1: FDI 41 — Nommage et adressage de base

Reference number
ISO/IEC ISP 12068-1:1996(E)

Copyright International Organization for Standardization
Provided by IHS under license with ISO
No reproduction or networking permitted without license from IHS
Not for Resale

Contents

Foreword

Introduction

1 Scope
1.1 General
1.2 Position within the taxonomy
1.3 Scenario

2 Normative references

3 Definitions

4 Support level

5 Abbreviations

6 Conformance
6.1 DSA conformance
6.2 DUA conformance

7 DIT structure

8 Object classes

9 Attribute types

10 Attribute syntaxes

Annexes

A Profile Requirements List for FDI 41

B Profile Object Identifier

© ISO/IEC 1996

All rights reserved. Unless otherwise specified, no part of this publication may be reproduced or utilized in any form or by any means, electronic or mechanical, including photocopying and microfilm, without permission in writing from the publisher.

ISO/IEC Copyright Office • Case postale 56 • CH-1211 Genève 20 • Switzerland

Printed in Switzerland

Copyright International Organization for Standardization
Provided by IHS under license with ISO
No reproduction or networking permitted without license from IHS
Not for Resale

Foreword

ISO (the International Organization for Standardization) and IEC (the International Electrotechnical Commission) form the specialized system for worldwide standardization. National bodies that are members of ISO or IEC participate in the development of International Standards through technical committees established by the respective organization to deal with particular fields of technical activity. ISO and IEC technical committees collaborate in fields of mutual interest. Other international organizations, governmental or non-governmental, in liaison with ISO and IEC, also take part in the work.

In the field of information technology, ISO and IEC have established a joint technical committee, ISO/IEC JTC 1. In addition to developing International Standards, ISO/IEC JTC 1 has created a Special Group on Functional Standardization for the elaboration of International Standardized Profiles.

An International Standardized Profile is an internationally agreed, harmonized document which identifies a standard or group of standards, together with options and parameters, necessary to accomplish a function or set of functions.

Draft International Standardized Profiles are circulated to national bodies for voting. Publication as an International Standardized Profile requires approval by at least 75% of the national bodies casting a vote.

International Standardized Profile ISO/IEC ISP 12068-1 was prepared with the collaboration of

- Asia-Oceania Workshop (AOW);
- European Workshop for Open Systems (EWOS);
- OSE Implementors' Workshop (OIW).

ISO/IEC ISP12068 consists of the following parts under the general title *Information technology - International Standardized Profile FDI 4 - Directory data definitions - Use of the Directory for OSI TP :*

- *Part 1 : FDI 41 - Basic naming and addressing*
- *Part 2 : FDI 42 - Enhanced naming and addressing*

Annexes A and B form an integral part of this part of ISO/IEC ISP 12068.

Copyright International Organization for Standardization
Provided by IHS under license with ISO
No reproduction or networking permitted without license from IHS
Not for Resale

Introduction

The concept and structure of International Standardized Profiles for Information Systems are laid down in the Technical Report ISO/IEC TR 10000. The purpose of an International Standardized Profile is to recommend when and how certain information technology standards shall be used. ISO/IEC ISP 12068 specifies application profile FDI 4 as defined in the Technical Report ISO/IEC TR 10000-2. ISO/IEC ISP 12068 is one of a set of International Standardized Profiles relating to the Directory (see ISO/IEC TR 10000-2). It specifies the schema of information for the OSI TP application to be stored in the Directory according to ISO/IEC 9594.

ISO/IEC ISP 10616 profiles information to be stored within the Directory which is common to a variety of applications. This ISP augments that information with OSI TP specific information.

Statements and conformance requirements stated in ISP for the information profiled by ISO/IEC ISP 10616 are also valid for the OSI TP specific information profiled by this ISP.

ISO/IEC ISP 12028 specifies the use of the Directory for OSI TP, using existing object class and attribute type definitions from the Directory specifications themselves, and additional definitions. These existing and additional definitions are also intended to support the use of the Directory by users of OSI TP applications.

Copyright International Organization for Standardization
Provided by IHS under license with ISO
No reproduction or networking permitted without license from IHS
Not for Resale

Information technology - International Standardized Profile FDI 4 - Directory data definitions - Use of the Directory for OSI TP -

Part 1 :
FDI 41 - Basic naming and addressing

1 Scope

1.1 General

ISO/IEC ISP 10616 profiles information to be stored within the Directory which is common to a variety of applications. ISO/IEC ISP 12068 augments this information with OSI TP specific information.

Statements and conformance requirements stated in ISO/IEC ISP 10616 for the information profiled by ISO/IEC ISP 10616 are also valid for the OSI TP specific information profiled by this international Standardized Profile.

ISO/IEC ISP 12068 specifies the use of the Directory, for OSI TP, using existing object class and attribute type definitions from the Directory specifications themselves, and additional definitions.

These existing and additional definitions are also intended to support the use of the Directory by users of OSI TP applications.

This part of ISO/IEC ISP 12068 defines those additional information which are needed to retrieve basic addressing information for applications using the OSI TP service.

1.2 Position within the taxonomy

ISO/IEC ISP 12068 is identified in ISO/IEC TR 10000-2 as "Information technology - International Standardized Profile FDI 4 - Directory data definitions - Use of the Directory for OSI TP.

1.3 Scenario

An OSI TP application, by means of its associated DUA, obtains Directory information by accessing directly or indirectly one or more DSAs of the Directory (see figure 1).

Copyright International Organization for Standardization
Provided by IHS under license with ISO
No reproduction or networking permitted without license from IHS Not for Resale

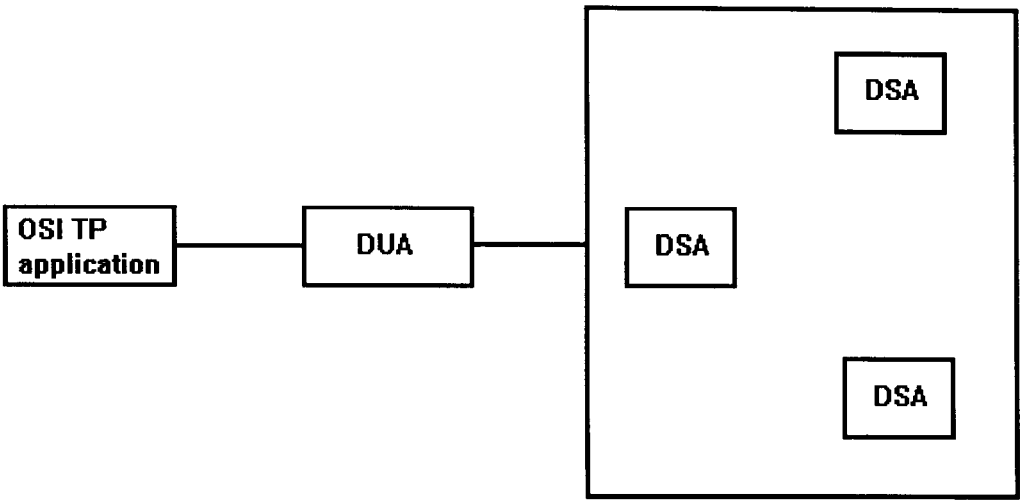

Figure 1 - Access of an OSI TP application to the Directory

2 Normative references

The following documents contain provisions which, through reference in this text, constitute provisions of this part of ISO/IEC ISP 12068. At the time of publication, the editions indicated were valid. All documents are subject to revision, and parties to agreements based on this part of ISO/IEC ISP 12068 are warned against automatically applying any more recent editions of the documents listed below, since the nature of references made by ISPs to such documents is that they may be specific to a particular edition. Members of IEC and ISO maintain registers of currently valid International Standards and ISPs, and ITU-T maintains published editions of its current Recommendations.

ISO/IEC 9594-6:1990, *Information technology - Open Systems Interconnection - The Directory - Part 6 : Selected attribute types.*

ISO/IEC 9594-7:1990, *Information technology - Open Systems Interconnection - The Directory - Part 7 : Selected object classes.*

ISO/IEC TR 10000-1:1995, *Information technology - Framework and taxonomy of International Standardized Profiles - Part 1: General principles and documentation framework.*

ISO/IEC TR 10000-2:1995, *Information technology - Framework and taxonomy of International Standardized Profiles - Part 2 : Principles and taxonomy for OSI profiles.*

ISO/IEC 10026-1:1992, *Information technology - Open Systems Interconnection - Distributed Transaction Processing - Part 1 : OSI TP Model.*

ISO/IEC 10026-2:1996, *Information technology - Open Systems Interconnection - Distributed Transaction Processing - Part 2 : OSI TP Service .*

ISO/IEC 10026-3:1996, *Information technology - Open Systems Interconnection - Distributed Transaction Processing - Part 3 : Protocol specification.*

ISO/IEC ISP 10616:1995, *Information technology - International Standardized Profile FDI 11 - Directory data definitions - Common Directory Use (Normal).*

Copyright International Organization for Standardization
Provided by IHS under license with ISO
No reproduction or networking permitted without license from IHS Not for Resale

3 Definitions

For the purposes of this part of ISO/IEC ISP 12068, the definitions given in the referenced standards apply.

4 Support Level

To specify the support level of protocol features for this part of ISO/IEC ISP 12068, the following terminology is defined.

4.2.1 mandatory; m : Mandatory requirement for support. A feature (object class, attribute type, attribute syntax) is supported by a DSA implementation if the DSA is able to process the feature in accordance with the base standard or as specified ISO/IEC ISP (see also clauses 8, 9 and 10).

4.2.2 optionally supported; o : The support of the feature (object class, attribute type, attribute syntax) is left to the implementor of the DSA.

5 Abbreviations

DIB	Directory Information Base
DIT	Directory Information Tree
DSA	Directory Service Agent
DUA	Directory User Agent
ISP	International Standardized Profile
OID	Object Identifier
OSI TP	Open Systems Interconnection - Transaction Processing
PRL	Profile Requirements List
TPSU	TP Service User

6 Conformance

6.1 DSA conformance

Conformance to this part ISO/IEC ISP 12028 implies conformance to ISO/IEC ISP 10616, i.e., as a precondition to conform to this part ISO/IEC ISP 12068, a Directory System Agent shall fulfill the conformance requirements as stated in ISO/IEC ISP 10616.

In addition, a Directory System Agent shall after suitable set up be capable of storing, modifying and retrieving entries which fulfill all of the following conditions :

- the entry lies within the scope of the minimum set of structure and naming elements specified in clause 7 ;

- the entry's object classes are part of the set of mandatory object classes (specified in A.6.4.1) and the subset of optional object classes (see ISO/IEC ISP 10616, A.6.4.1) for which support is claimed for the DSA ;

Copyright International Organization for Standardization
Provided by IHS under license with ISO
No reproduction or networking permitted without license from IHS Not for Resale

- the entry's attributes are part of the set of mandatory attribute types (as specified in A.6.4.2) and the subset of optional attribute types (see ISO/IEC ISP 10616, A.6.4.2) for which support is claimed for the DSA.

The requirements formulated in ISO/IEC ISP 10616 with respect to supported object classes, supported attribute types and supported attribute syntaxes according to ISO/IEC ISP 10616 are also valid for the additional supported object classes, supported attribute types and supported attribute syntaxes according to this part of ISO/IEC ISP 12068.

6.2 DUA conformance

DUAs typically need schema information as outlined in this part of ISO/IEC ISP 12068 to support Use of the Directory for OSI TP. However, this part of ISO/IEC ISP 12068 makes no statements about DUA conformance.

7 DIT structure

The purpose of this clause is to relate information specified in ISO/IEC ISP 12068 to the minimum set of structure and naming elements defined in ISO/IEC ISP 10616 and thus to provide locations for entries of selected object classes. The DIT structure which shall as a minimum be supported by implementations claiming conformance to ISO/IEC ISP 12068 is that defined in ISO/IEC ISP 10616 and in clauses 8 and 9.

The DIT structure which shall as a minimum be supported by implementations claiming conformance to ISO/EC ISP 12068 is the superset of

- structure elements listed in ISO/IEC ISP 10616, and

- structure elements listed in A.6.5.1.

This DIT structure is supported in the sense that a conformant DSA shall be capable of storing, modifying and retrieving entries which are part of a tree with this structure (for a more formal definition see ISO/IEC ISP 10616).

8 Object classes

The following object class shall be supported in addition to those specified in ISO/IEC ISP 10616:

- tpsu

To define the application entity objects that are the objects stored in the Directory describing OSI TP entities, it is necessary to have Object Identifiers to identify the various objects and attributes.

In the following definitions the Object Identifier used as the parent vertex for the definition of object identifiers for TP object classes is:

osiTpObjectClass ::= OBJECT IDENTIFIER {iso(1) standard(0) fdi4(12068) objectClass(6)}
"OSI TP object class"

Copyright International Organization for Standardization
Provided by IHS under license with ISO
No reproduction or networking permitted without license from IHS
Not for Resale

8.1 tpsu

The tpsu structural object class is used to describe the information relative to a TP Service User.

```
tpsu OBJECT CLASS
        SUBCLASS OF top
        KIND structural
        MUST CONTAIN {
                tpsuTitle,
                tpRoles,
                applicationEntities}
        MAY CONTAIN {
                tpApplicationContext,
                tpSymbolicNames,
                tpHumanReadableInformati

        :: = {osiTpObjectClass 1}
```

9 Attribute types

The following attribute types shall be supported in addition to those specified in ISO/IEC ISP 10616:

- applicationEntities
- tpApplicationContext
- tpHumanReadableInformation
- tpRoles
- tpsuTitle
- tpSymbolicNames

Each of the additionally defined attributes requires an Object Identifier to identify it, and the parent vertex definition for these OIDs is:

```
osiTpAttributeType ::= OBJECT IDENTIFIER
{iso(1) standard(0) fdi4 (12068) attributeType
"OSI TP attribute type"
```

9.1 TPSU Title

The TPSU Title attribute type specifies the name used to designate the user of OSI TP services in an application process.

```
tpsuTitle ATTRIBUTE
        WITH SYNTAX TPSU-title
        EQUALITY MATCHING RULE
        SINGLE VALUE TRUE
        ID {tpAttributeType 1}
```


Copyright International Organization for Standardization
Provided by IHS under license with ISO
No reproduction or networking permitted without license from IHS
Not for Resale

9.2 TP Roles

The TP Roles attribute type specifies the roles a TPSU is able to take when using the OSI TP protocol.

tpRoles ATTRIBUTE
WITH SYNTAX TpRoles
EQUALITY MATCHING RULE
SINGLE VALUE TRUE
ID {tpAttributeType 2}

Two tpRoles values match if the ENUMERATED values match.

9.3 Application Entities

The Application Entities attribute type specifies the list of application entity titles through which the TPSU can be accessed.

applicationEntities ATTRIBUTE
WITH SYNTAX distinguishedNameSyntax
EQUALITY MATCHING RULE
SINGLE VALUE FALSE
ID {tpAttributeType 3}

9.4 TP Application Context

The TP Application Context attribute type specifies the application context supported by the TPSU.

tpApplicationContext ATTRIBUTE
WITH SYNTAX objectIdentifierSyntax
EQUALITY MATCHING RULE
SINGLE VALUE FALSE
ID {tpAttributeType 4}

9.5 TP Symbolic Names

The TP Symbolic Names attribute type specifies another way of naming a TPSU.

tpSymbolicName ATTRIBUTE
WITH SYNTAX caseExactStringSyntax
EQUALITY MATCHING RULE
SUBSTRINGS MATCHING RULE
SINGLE
VALUE FALSE
ID {tpAttributeType 5}

Copyright International Organization for Standardization
Provided by IHS under license with ISO
No reproduction or networking permitted without license from IHS Not for Resale

9.6 TP Human Readable Information

The TP Human Readable Information attribute type specifies any information relevant to a TPSU that is not expressed by any of the previously listed attribute types.

```
tpHumanReadableInformation ATTRIBUTE
        WITH SYNTAX caseIgnoreStringSyntax
        EQUALITY MATCHING RULE
        SUBSTRINGS MATCHING RULE
        SINGLE VALUE FALSE
        ID {tpAttributeType 6}
```

10 Attribute syntaxes

The following attribute syntaxes shall be supported in addition to those specified in ISO/IEC ISP 10616:

- TPSU-title
- tpRoles

The module defining the abstract syntaxes used in ISO/IEC ISP 12068 is identified by the following Object Identifier:
tpAbstractSyntaxes ::= OBJECT IDENTIFIER {iso(1) standard(0) fdi4(12068) modules(1)} "OSI TP abstract syntaxes"

```
DEFINITIONS IMPLICIT TAGS ::=
BEGIN

-- EXPORTS all --
IMPORTS TPSU-title FROM Transaction-Processing-APDUs {joint-iso-ccitt(2) transaction-processing(10)
modules(1) apdus-abstract-syntax(1) version1(0)}

IMPORTS distinguishedNameSyntax, objectIdentifierSyntax,
        caseIgnoreStringSyntax, caseExactStringSyntax,
        FROM {joint-iso-ccitt ds(5) modules(1)
                selectedAttributeTypes(5)}


tpRoles ::= ENUMERATED {
        initiator       (1),
        responder       (2),
        both            (3)}

END
```


Copyright International Organization for Standardization
Provided by IHS under license with ISO
No reproduction or networking permitted without license from IHS Not for Resale

Annex A
(normative)

Profile Requirements List of FDI 41
Use of the Directory for OSI TP - Basic Naming and Addressing

In the event of a discrepancy becoming apparent in the body of this part of ISO/IEC ISP 12068 and the tables in this annex, this annex is to take precedence.

This annex specifies the constraints and characteristicas of this part of ISO/IEC ISP 12068 on what shall or may appear in an implementor's PICS for an implementation conformant to this part of ISO/IEC ISP 12068.

This annex is based on the Directory Access Protocol PICS proforma of Recommendation CCITT X.851 and on ISO/IEC ISP 10616, annex A. It uses only a selection of the tables of CCITT X.581 which are necessary for the specification of the ISP status. The numbering of the base PICS Proforma is retained in order to facilitate for an implementor to fill in the respective PICS proforma.

The terminology of conformance requirements is used as defined in clause 4.

A.1 to A.5

No requirements stated in this part of ISO/IEC ISP 12068.

A.6 Capabilities and options

A.6.1 to A/6.3

No requirements stated in this part of ISO/IEC 12068.

A.6.4 Directory schema

A.6.4.1 Object classes

A.6.4.1.1 Standard object classes

No additional requirements are stated in this part of ISO/IEC ISP 12068 beyond those stated in ISO/IEC ISP 10616, A.6.4.1.1.

A.6.4.1.2 Other object class (see clause 8)

The table below indicates the conformance requirements of this part of ISO/IEC ISP 12068 on other object class in addition to those stated in ISO/IEC ISP 10616, A.6.4.1.2.

Ref. no	Object Class	Base standard	Profile	Note
1	tpsu	-	m	see 8.1

Copyright International Organization for Standardization
Provided by IHS under license with ISO
No reproduction or networking permitted without license from IHS
Not for Resale

A.6.4.2 Attribute types

A.6.4.2.1 Standard attribute types

No additional requirements are stated in this part of ISO/IEC ISP 12068 beyond those stated in ISO/IEC ISP 10616, A.6.4.2.1.

A.6.4.2.2 Other attribute types (see clause 9)

The table below indicates the conformance requirements of this part of ISO/IEC ISP 12068 on other attribute types in addition to those stated in ISO/IEC ISP 10616, A.6.4.2.2.

Ref. no	Attribute type	Base standard	Profile	Note
1	tpsuTitle	-	m	see 9.1
2	tpRoles	-	m	see 9.2
3	applicationEntities	-	m	see 9.3
4	tpApplicationContext	-	o	see 9.4
5	tpSymbolicName	-	o	see 9.5
6	tpHumanReadableInformation	-	o	see 9.6

A.6.5 Other information

A.6.5.1 Minimum set of structure and naming elements (see clause 7)

The table below defines the structure elements for the minimum structure and naming rules for the DIT corresponding to the structural object class of this part of ISO/IEC ISP 12068.

Structure Element	Structural Object Class	Superior Struct. Element	Naming Attribute	Note
18	tpsu	15 (Application Process)	TPSU Title	

A.6.5.2 Additional object classes for structure elements of the DIT (see clauses 7 and 8)

No additional requirements are stated in this part of ISO/IEC ISP12068 beyond those stated in ISO/IEC ISP 10616.

A.6.5.3 Attribute syntaxes

The table below indicates the conformance requirements on the attribute syntaxes defined by this part of ISO/IEC ISP 12068.

Attribute syntax	Base standard	Profile	Note
tpRoles	-	m	

Copyright International Organization for Standardization
Provided by IHS under license with ISO
No reproduction or networking permitted without license from IHS Not for Resale

A.6.5.4 Regional requirements for support of T61String

No additional requirements are stated in this part of ISO/IEC ISP 12068 beyond those stated in ISO/IEC ISP 10616, A.6.5.4.

Copyright International Organization for Standardization
Provided by IHS under license with ISO
No reproduction or networking permitted without license from IHS Not for Resale

Annex B
(normative)

Profile Object Identifier

The profile defined in ISO/IEC ISP 12068 is identified by the following object identifier.

{iso(1) standard(0) fdi4(12068) profile(0) part1(0) year(199X)}

"Use of the Directory for OSI TP - 199X"

Copyright International Organization for Standardization
Provided by IHS under license with ISO
No reproduction or networking permitted without license from IHS
Not for Resale

© ISO/IEC

ICS 35.100

Descriptors: data processing, information interchange, network interconnection, open systems interconnection, communication procedure, directories, naming, addressing, implementation.

Price based on 11 pages

Copyright International Organization for Standardization
Provided by IHS under license with ISO
No reproduction or networking permitted without license from IHS

Not for Resale