INTERNATIONAL STANDARDIZED PROFILE

ISO/IEC ISP 11186-1

First edition
1996-09-01

Information technology — International Standardized Profiles FVT3nn — Virtual Terminal Basic Class — Register of attribute assignment type definitions —

Part 1:
FVT321 — Font Assignment Type No. 1

Technologies de l'information — Profils normalisés internationaux FVT3nn — Classe de base du terminal virtuel — Registre de définitions de type d'allocation d'attribut —

Partie 1: FVT321 — Type d'allocation font nº 1



Reference number
ISO/IEC ISP 11186-1:1996(E)

Copyright International Organization for Standardization
Provided by IHS under license with ISO
No reproduction or networking permitted without license from IHS

Not for Resale

Contents

Page

Foreword iii

Introduction iv

1 Scope 1
1.1 General 1
1.2 Position within the taxonomy 1
1.3 Scenario 2

2 Normative references 3

3 Definitions 3
3.1 General OSI terminology 3
3.2 Terminology of VT base standards 3
3.3 Terminology of font information interchange standards 4
3.4 Terminology of coded character set standards 4

4 Abbreviations 4

5 Principles of conformance to VT Profiles 4

6 Entry number 4

7 Name of sponsoring authority 4

8 Date 4

9 Identifier 4

10 Descriptor value 5

11 Font designation 5
11.1 Underlying principles 5
11.2 Font description properties 6

12 Writing mode specification 8
12.1 Glyph coordinate system 8
12.2 Modal properties 8

13 Relationship between font and emphasis 9

14 Abstract syntax 9

© ISO/IEC 1996
All rights reserved. Unless otherwise specified, no part of this publication may be reproduced or utilized in any form or by any means, electronic or mechanical, including photocopying and microfilm, without permission in writing from the publisher.

ISO/IEC Copyright Office • Case Postale 56 • CH-1211 Genève 20 • Switzerland

Printed in Switzerland

Copyright International Organization for Standardization
Provided by IHS under license with ISO
No reproduction or networking permitted without license from IHS
Not for Resale

Foreword

ISO (the International Organization for Standardization) and IEC (the International Electrotechnical Commission) form the specialized system for worldwide standardization. National bodies that are members of ISO or IEC participate in the development of International Standards through technical committees established by the respective organization to deal with particular fields of technical activity. ISO and IEC technical committees collaborate in fields of mutual interest. Other international organizations, governmental and non-governmental, in liaison with ISO and IEC, also take part in the work.

In the field of information technology, ISO and IEC have established a joint technical committee, ISO/IEC JTC 1. In addition to developing International Standards, ISO/IEC JTC 1 has created a Special Group on Functional Standardization for the elaboration of International Standardized Profiles.

An International Standardized Profile is an internationally agreed, harmonized document which identifies a standard or group of standards, together with options and parameters, necessary to accomplish a function or set of functions.

Draft International Standardized Profiles are circulated to national bodies for voting. Publication as an International Standardized Profile requires approval by at least 75% of the national bodies casting a vote.

International Standardized Profile ISO/IEC ISP 11186-1 was prepared with the collaboration of

— OSI Asia-Oceania Workshop (AOW);
— European Workshop for Open Systems (EWOS);
— Open Systems Environment Implementors' Workshop (OIW).

ISO/IEC ISP 11186 consists of the following parts, under the general title *Information technology — International Standardized Profiles FVT3nn — Virtual Terminal Basic Class — Register of attribute assignment type definitions*:

— *Part 1: FVT321 — Font Assignment Type No.1*
— *Part 2: FVT311 — Repertoire Assignment Type for ISO/IEC 10646*

Copyright International Organization for Standardization
Provided by IHS under license with ISO
No reproduction or networking permitted without license from IHS
Not for Resale

Introduction

ISO/IEC ISP 11186 is defined within the context of Functional Standardization, in accordance with the principles specified in ISO/IEC TR 10000, "Framework and Taxonomy of International Standardized Profiles". The context of Functional Standardization is one part of the overall field of Information Technology (IT) standardization activities, covering base standards, profiles and registration mechanisms.

The Open Systems Interconnection (OSI) Standard ISO 9040 for the Virtual Terminal Basic Class Service provides for the identification of attribute assignment types by means of ASN.1 object identifiers. This International Standardized Profile provides a means for the registration of such attribute assignment type definitions in accordance with ISO/IEC 9834-1. The individual entries in this register constitute Interchange Format and Representation Profiles (F-Profiles) within the framework of ISO/IEC TR 10000.

This part of ISO/IEC ISP 11186 was developed in close cooperation between the three Regional OSI Workshops, namely the OSE Implementors' Workshop (OIW) of the United States, the European Workshop for Open Systems (EWOS) and the OSI Asia-Oceania Workshop (AOW). It was developed under the editorship of EWOS from an attribute assignment type definition contained in the European pre-standard ENV 41 513. The text is harmonized between these three Workshops and it has been ratified by the plenary assemblies of each Workshop.

--`,,```,,,,````-`-`,,`,,`,`,,`---

Copyright International Organization for Standardization
Provided by IHS under license with ISO
No reproduction or networking permitted without license from IHS Not for Resale

Information technology — International Standardized Profiles FVT3nn — Virtual Terminal Basic Class — Register of attribute assignment type definitions —

Part 1:
FVT321 — Font Assignment Type No.1

1 Scope

1.1 General

The concept of Profiles for OSI, and the structure of the International Standardized Profiles that document them, are defined in ISO/IEC TR 10000-1. Such Profiles are divided into a number of different classes and sub-classes. Two of these classes contain sub-classes comprising functions of the Virtual Terminal Basic Class Service and Protocol specified in the base standards ISO 9040 and ISO 9041. These are the Application Profiles (A-Profiles) and the Interchange Format and Representation Profiles (F-Profiles).

The relationship between A-Profiles and F-Profiles is described in 7.3.2 of ISO/IEC TR 10000-1 and is as follows. Application Layer base standards require, implicitly or explicitly, the structure of information carried or referenced by them to be specified for each instance of communication. It is the purpose of F-Profiles to specify such information structures. Particular functional requirements may then be met by the combination of an A-Profile with one or more F-Profiles.

Establishment of a VT-association involves the selection by negotiation of a particular Virtual Terminal Environment profile (VTE-profile), and of particular values for any arguments of that VTE-profile. The VTE-profile specification, and possibly also the values of certain VTE-profile arguments, may in turn reference the definitions of VT control object types and attribute assignment types. These VTE-profiles, control object types and attribute assignment types are therefore Information Objects that require explicit reference within the VT protocol. Particular instances of these Information Objects are fully defined within the base standards, but the base standards also provide for further instances to be defined by registration. Each registered instance constitutes an F-Profile within the framework of ISO/IEC TR 10000.

The Virtual Terminal Basic Class Service and Protocol may be used to realise a wide range of distinct functions. Particular functions may be realised through the selection of appropriate VT functional units, F-Profiles and other VTE-profile argument values. The specification of the selection required to realise a particular function and to promote interoperability constitutes a Virtual Terminal A-Profile within the framework of ISO/IEC TR 10000.

The three International Registers of VT information objects and the specifications of VT Application Profiles are each published as a separate multi-part ISP as follows:

— ISO/IEC ISP 11184 is the Register of VTE-profiles;

— ISO/IEC ISP 11185 is the Register of control object type definitions;

— ISO/IEC ISP 11186 is the Register of attribute assignment type definitions;

— ISO/IEC ISP 11187 contains the specifications of VT Application Profiles.

This part of ISO/IEC ISP 11186 contains the definition of a font assignment type that enables a font assignment value to be specified as a font resource property-list in accordance with ISO/IEC 9541-1. The properties that may be included in the property-list are specified as a subset of the properties defined for a character cell font. Particular provision is made for font resources in which the height and width of a character cell are integer multiples of the height and width of the character boxes that comprise the graphical images considered by the VT service. Provision is also made for the use of both left-to-right and right-to-left writing modes and for the coexistence of both modes in the display object.

1.2 Position within the taxonomy

The taxonomy of International Standardized Profiles for OSI is laid down in ISO/IEC TR 10000-2. Within the classification scheme of this taxonomy, the OSI Profiles specified in this International Standardized Profile are in the Virtual Terminal Registered Object sub-class of the class of Interchange Format and Representation Profiles.

A Profile within this subclass has a Profile identifier of the form FVT*abc*, where *abc* is a structured numerical identifier that identifies the position of the Profile within each of the three levels of subdivision of the subclass. The values of *a* and *b* are single digits but *c* is an integer that is not necessarily a single digit.

In principle the ISO Virtual Terminal model allows for multiple classes of operation, although at the time of publication of this International Standardized Profile only the Basic Class

Copyright International Organization for Standardization
Provided by IHS under license with ISO
No reproduction or networking permitted without license from IHS
Not for Resale

has been defined. The value of the identifier component *a* distinguishes between distinct types of information object as follows:

— *a* = 1 for Basic Class VTE-profiles;

— *a* = 2 for Basic Class Control Objects;

— *a* = 3 for Basic Class Assignment Types.

Values of *a* greater than 3 are reserved for future developments.

This International Standardized Profile ISO/IEC ISP 11186 contains the specifications of the Profiles with identifiers of the form FVT3*bc*. For this form of identifier, the component *b* distinguishes between the three attributes of display object array elements for which assignment types are defined in accordance with ISO 9040. The values of *b* are allocated as follows:

— *b* = 1 for repertoire assignment types;

— *b* = 2 for font assignment types;

— *b* = 3 for colour assignment types.

The identifier component *c* is the serial number of the attribute assignment type in the sub-register for the particular attribute concerned. Values of *b* greater than 3 are reserved for further attributes that may be defined as subject to registration in future amendments to ISO 9040.

This part of ISO/IEC ISP 11186 contains the definition of the font assignment type with the Profile identifier

FVT321 — Font Assignment Type No.1.

1.3 Scenario

The specification of the Virtual Terminal Service is given in ISO 9040. It is based on a model in which two VT-users communicate by means of a shared Conceptual Communication Area (CCA) that is a conceptual part of the VT service-provider. Information exchange is modelled by one VT-user updating the content of the CCA and the changed state of the CCA then being made accessible to the peer VT-user.

The CCA is structured by the Virtual Terminal Service into a number of components. Of these components, the Conceptual Data Store (CDS) contains one or two display objects (DOs), each of which includes a one, two or three dimensional array of array elements. Each array element is either empty or has a content that consists of a primary attribute and a number of secondary attributes. The primary attribute value selects one character-box graphic element from a repertoire of such elements that is determined by the character-repertoire secondary attribute. The other secondary attributes are the font, emphasis, foreground-colour and background-colour attributes which are collectively referred to as rendition attributes.

The values permitted for the secondary attributes are specified by attribute assignments that are included among the parameters of a Virtual Terminal Environment (VTE). The font attribute is subservient to the character-repertoire attribute in that a separate set of permitted values for the font attribute is specified for each permitted value of the character-repertoire attribute. The values permitted for the other secondary attributes are mutually independent.

With the exception of the emphasis attribute, an attribute assignment is composed of two parts, a type and a value. For the emphasis attribute, the syntax of permitted values is prescribed by the VT service base standard ISO 9040 and the semantics of each value is determined by the specification of the VTE-profile currently in use. For all other secondary attributes, the assignment type determines both the syntax of the permitted values and the semantic interpretation of each such value.

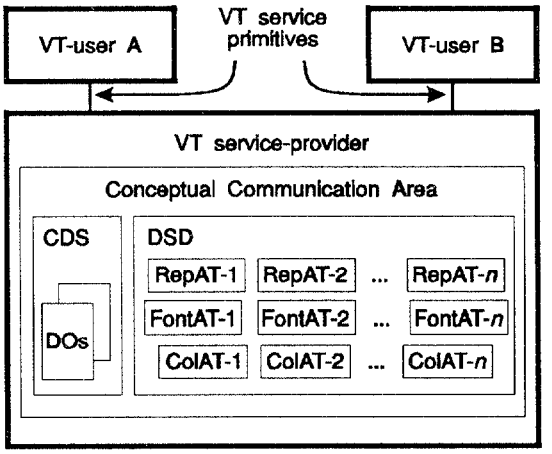

Figure 1 — Attribute assignment types in the VT Service model

Assignment type definitions are required for only three distinct attributes, namely repertoire, font and colour, since both foreground-colour and background-colour secondary attributes reference the same assignment types. The attribute assignments specified by the parameter values of a VTE, and the assignment type definitions to which they refer, are held in the Data Structure Definition (DSD) component of the CCA. This is illustrated in figure 1, in which RepAT-1, RepAT-2, ... RepAT-*n* represent a number of different repertoire assignment types, FontAT-1, FontAT-2, ... FontAT-*n* represent a number of different font assignment types and ColAT-1, ColAT-2, ... ColAT-*n* represent a number of different colour assignment types. The negotiation during establishment of a VT-association will determine whether or not these will include the attribute assignment type whose definition is given in this part of ISO/IEC ISP 11186.

NOTE — A VTE-profile specification may prescribe the attribute assignments that are present in any VTE established by its use, or may provide VTE-profile arguments for the negotiation of these attribute assignments, or may use a combination of these methods. Where some or all of the attribute assignments are determined by negotiation, attribute assignment types are referenced by their registered name. The permitted syntax of the corresponding attribute assignment value is determined by the definition that has this registered name. Since the VT service-provider is not required to have knowledge of these registered definitions, in principle the VT-users provide the VT service-provider with such information through local management procedures. Whether or not this is necessary in practice depends on the nature of the implementations concerned.

Copyright International Organization for Standardization
Provided by IHS under license with ISO
No reproduction or networking permitted without license from IHS
Not for Resale

2 Normative references

The following documents contain provisions which, through reference in this text, constitute provisions of this part of ISO/IEC ISP 11186. At the time of publication, the editions indicated were valid. All documents are subject to revision, and parties to agreements based on this part of ISO/IEC ISP 11186 are warned against automatically applying any more recent editions of the documents listed below, since the nature of references made by ISPs to such documents is that they may be specific to a particular edition. Members of IEC and ISO maintain registers of currently valid International Standards and ISPs, and CCITT maintains published editions of its current Recommendations.

ISO/IEC 6429:1992, *Information technology — Control functions for coded character sets* (third edition).

ISO/IEC 7498-1:1994, *Information technology — Open Systems Interconnection — Basic Reference Model: The Basic Model.* (See also ITU-T Recommendation X.200).

ISO/IEC 8824-1:1995, *Information technology — Abstract Syntax Notation One (ASN.1): Specification of basic notation* (third edition). (See also ITU-T Recommendation X.680).

ISO 9040:1990, *Information technology — Open Systems Interconnection — Virtual Terminal Basic Class Service.*

ISO 9041-1:1990, *Information technology — Open Systems Interconnection — Virtual Terminal Basic Class Protocol — Part 1: Specification.*

ISO/IEC 9541-1:1991, *Information technology — Font information interchange — Part 1: Architecture.*

ISO/IEC 9541-2:1991, *Information technology — Font information interchange — Part 2: Interchange format.*

ISO/IEC 9834-1:1993, *Information technology — Open Systems Interconnection — Procedures for the operation of OSI Registration Authorities — Part 1: General procedures.* (See also CCITT Recommendation X.660).

ISO/IEC TR 10000-1:1995, *Information technology — Framework and taxonomy of International Standardized Profiles — Part 1: General principles and documentation framework* (third edition).

ISO/IEC TR 10000-2:1995, *Information technology — Framework and taxonomy of International Standardized Profiles — Part 2: Principles and Taxonomy for OSI profiles* (fourth edition).

ISO/IEC 10646-1:1993, *Information technology — Universal Multiple-Octet Coded Character Set (UCS) — Part 1: Architecture and Basic Multilingual Plane.*

ISO/IEC 10731:1994, *Information technology — Open Systems Interconnection — Basic Reference Model — Conventions for the definition of OSI services.* (See also ITU-T Recommendation X.210).

3 Definitions

For the purposes of this part of ISO/IEC ISP 11186, the following definitions apply.

3.1 General OSI terminology

3.1.1 This part of ISO/IEC ISP 11186 makes use of the following terms defined in ISO/IEC 10731:

a) service primitive;

b) service-provider.

3.1.2 This part of ISO/IEC ISP 11186 makes use of the following terms defined in ISO/IEC 8824:

a) any type;

b) component type;

c) information object;

d) module;

e) object descriptor type;

f) object identifier;

g) parent type (of a subtype);

h) structured type;

i) subtype (of a parent type).

3.1.3 This part of ISO/IEC ISP 11186 makes use of the following terms defined in ISO/IEC 9834-1:

a) registration;

b) registration-hierarchical-name.

3.2 Terminology of VT base standards

3.2.1 This part of ISO/IEC ISP 11186 makes use of the following terms defined in ISO 9040:

a) array element;

b) character-box graphic element;

c) character-repertoire;

d) display object;

e) primary attribute;

f) rendition attributes;

g) secondary attribute;

h) VT-association;

i) VT-environment (VTE);

j) VT-user;

k) VTE-parameter;

l) VTE-profile;

m) VTE-profile argument.

Copyright International Organization for Standardization
Provided by IHS under license with ISO
No reproduction or networking permitted without license from IHS
Not for Resale

3.3 Terminology of font information interchange standards

3.3.1 This part of ISO/IEC ISP 11186 makes use of the following terms defined in ISO/IEC 9541-1:

a) escapement;

b) font;

c) font reference;

d) font resource;

e) glyph;

f) glyph coordinate system;

g) glyph image;

h) posture;

i) presentation surface;

j) property;

k) property-list;

l) proportionate width;

m) structured-name;

n) weight;

o) writing mode.

3.4 Terminology of coded character set standards

3.4.1 This part of ISO/IEC ISP 11186 makes use of the following terms defined in ISO/IEC 10646-1:

a) cell;

b) character;

c) coded character;

d) coded character set.

4 Abbreviations

For the purposes of this part of ISO/IEC ISP 11186, the following abbreviations apply.

ASN.1 Abstract Syntax Notation One
CCA Conceptual Communication Area
CDS Conceptual Data Store
DO Display Object
DSD Data Structure Definition
PDU Protocol Data Unit
VT Virtual Terminal
VTE Virtual Terminal Environment

All other abbreviations used are defined in ISO/IEC TR 10000-1.

5 Principles of conformance to VT Profiles

Profiles with taxonomy identifiers of the form FVT3*nn* provide attribute assignment type definitions for reference as required by VTE-profile specifications given in FVT1*nn* Profiles, by control object type definitions given in FVT2*nn* Profiles and by VT Application Profiles given in AVT*nn* Profiles.

There is no concept of conformance to an FVT3*nn* Profile in isolation. An FVT1*nn* Profile that references an FVT3*nn* Profile may place requirements on an implementation of the VT protocol to be able to negotiate the presence in the CCA of attribute assignments of the type concerned. An FVT2*nn* Profile may impose similar requirements concerning FVT31*n* Profiles if it permits negotiation of values for the CO-repertoire-assignment VTE-parameter.

NOTE — The use of an attribute assignment type by a VTE-profile specification will have no effect on the operation of the VT protocol unless the attribute assignment concerned is subject to negotation during association establishment. Attribute assignments are referenced in display object update operations by their position in an ordered list, so that the PDUs carrying these operations are transparent to the specific assignments being referenced.

Such requirements of FVT1*nn* and FVT2*nn* Profiles reference the syntax of attribute assignment values as specified by the attribute assignment type concerned. A system that includes an implementation of the VT protocol may be claimed to conform also to an AVT*nn* Profile. Conformance to an AVT*nn* Profile may require that the image of the display object array presented by a real display device is in accordance with semantics specified by the attribute assignment type definitions referenced by the contents of the array elements. Conformance to attribute assignment type semantics is not within the scope of conformance to any FVT*nnn* Profile.

In accordance with these conformance principles, an FVT3*nn* Profile does not provide a Profile Requirements List as defined by ISO/IEC 9646-1.

6 Entry number

The remaining clauses of this part of ISO/IEC ISP 11186 provide the entry for the Font Assignment Type No.1 in the International Register of VT Attribute Assignment Type Definitions. This register complies with the requirements of ISO/IEC 9834-1 concerning registration authorities that operate in a technical role. This International Register is maintained as three sub-registers, one each for repertoire, font and colour assignment type definitions.

This entry is the first in the sub-register for font assignment type definitions. This register assigns it the entry number:

FONT-1.

7 Name of sponsoring authority

This entry is sponsored by the European Workshop for Open Systems (EWOS).

8 Date

The date of submission of this proposal was 1994-09-14.

9 Identifier

The name assigned to an information object by an International Register is required by ISO/IEC 9834-1 to be a

Copyright International Organization for Standardization
Provided by IHS under license with ISO
No reproduction or networking permitted without license from IHS
Not for Resale

registration-hierarchical-name. A registration-hierarchical-name may have more than one form. The permitted forms include an ASN.1 object identifier as defined in ISO/IEC 8824 and a distinguished name as defined in ISO/IEC 9594-2.

In accordance with annex A of ISO/IEC 9834-1, this register assigns the following object identifier form for the name of this register entry:

{ iso(1) standard(0) 11186 1 font(3) font1(1) }.

In accordance with 18.3 of ISO 9040, this object identifier shall be used as the font-assignment-type component of a value of the font-assignment VTE-parameter to specify this register entry as providing the method used to designate the font and to determine the form of the font-assignment-value component.

This register does not assign any other form to the name of this entry.

NOTE — By ISO/IEC 9834-1 a distinguished name for the purposes of the OSI Directory may only be assigned together with an object identifier when the object identifier form is generated under the arc { joint-iso-ccitt(2) country(16) country-name }.

10 Descriptor value

The value of the ASN.1 object descriptor type assigned to this register entry is:

"FVT321: Font Assignment Type No.1".

11 Font designation

11.1 Underlying principles

11.1.1 Font references

The font designation scheme of this assignment type uses the font reference data structure specified in annex A of ISO/IEC 9541-2. A font reference is intended for use in the identification and selection of a font resource that matches the set of property values specified in the font reference. ISO/IEC 9541-2 states that the font reference data structure which it defines may be used directly as a font reference (by specifying the selection semantics), or may be used as a building block for more complex font selection or substitution requirements. It also states that only those properties considered to be relevant to the originator need be specified in a font reference. This assignment type takes the former course, using the font reference data structure of ISO/IEC 9541-2 by specifying the relevant properties and the allowed values of each property.

The following properties of a font resource as defined in ISO/IEC 9541-1 are used in the designation scheme of this assignment type:

— posture;

— weight;

— proportionate width;

— structure;

— design group;

— glyph complement;

— nominal writing mode.

The first five of these properties concern the font design, in that they affect the individual glyphs of a font resource. The glyph complement specifies the set of all glyphs that are included in at least one writing mode that is defined for the font resource. A writing mode specifies those properties of a font resource that affect the positioning of the glyph images relative to one another. The nominal writing mode of a font resource is the writing mode that is to be used if no other writing mode is specified in a font reference. With the exception of the glyph complement, which is determined by the value of the character-repertoire rather than the font secondary attribute of an array element, the values of these properties are specified as parameters within a font assignment value of this font assignment type.

The properties listed above are all classified in ISO/IEC 9541-1 as font description properties. Writing modes are themselves specified by a further list of properties known as modal properties. Each writing mode available for a particular font is identified within ISO/IEC 9541-1 by a structured-name. The names available for the nominal writing mode property within this assignment type are specified in 11.2.7. The values of the modal properties for each named mode are specified in 12.2.

There are further ISO/IEC 9541-1 properties that are neither listed above nor determined in accordance with 12.2 by the writing mode concerned. These properties either describe aspects of a font resource that are treated by ISO 9040 as controlled by the emphasis secondary attribute (*e.g.* scores) or are beyond the resolution of terminals to which this assignment type is appropriate (*e.g.* posture angle).

11.1.2 Character cell model

The character-box model of graphic elements used in VT models glyphs as rectangular boxes which are all of the same width and height and which may be imaged consecutively to form text strings and text lines. This corresponds to a character cell font as described in 8.7.1.3 of ISO/IEC 9541-1. This assignment type allows the simultaneous use of more than one character cell font without requiring all such fonts to use the same size of character cell.

The relative sizes of the character cells of different fonts are specified in terms of the standard character-box of the VT model. This standard character-box is the box that is used to determine the values of the device-minimum-x-array-length and device-minimum-y-array-length VTE-parameters. Within this assignment type, individual fonts may have character cells whose widths and heights are integer multiples of those of the VT character-box. These multiples are specified within the font assignment value as part of the structured-name of the nominal writing mode, as described in clause 11.2.7 below. When these are both the unit multiple, the cell will be referred to as the standard character cell. The writing mode name is also used to specify whether the font is to be written from right to left or left to right.

NOTE — The size of a VT character-box remains well defined even when all values of the font attribute negotiated for use in a particular instance of communication consist of double-width characters (*e.g.* Kanji). In such a situation the maximum number of adjacent characters from one x-array that can be displayed simultaneously on a real device is one-half of the value of the device-minimum-x-array-length VTE-parameter for that device.

Copyright International Organization for Standardization
Provided by IHS under license with ISO
No reproduction or networking permitted without license from IHS
Not for Resale

11.2 Font description properties

The values permitted by this assignment type for the font description properties that may occur in a font assignment value are given below.

11.2.1 Posture

Posture is specified in ISO/IEC 9541-1 by an integer code, with one of the following values:

0 — not applicable;

1 — upright (*e.g.* Roman);

2 — oblique; upright design slanted in the direction of the nominal escapement with no design or form change;

3 — back slanted oblique; upright design slanted in the direction opposite of the nominal escapement with no design or form change;

4 — italic; slanted in the direction of the nominal escapement with a change in design or form;

5 — back slanted italic; italic design slanted in the direction opposite to the nominal escapement;

6 — other.

Within this assignment type, posture is an optional parameter. If it is omitted it indicates that this property of the rendition is specified by the emphasis attribute rather than the font attribute of the display object array element concerned. If the emphasis scheme does not have provision for the specification of posture, when this parameter is omitted then the posture is device-dependent.

11.2.2 Weight

Weight is specified in ISO/IEC 9541-1 by an integer code, with one of the following values:

0 — not applicable;

1 — ultra light;

2 — extra light;

3 — light;

4 — semi light;

5 — medium;

6 — semi bold;

7 — bold;

8 — extra bold;

9 — ultra bold.

Values 1-9 are ordered by increasing weight. Within this assignment type, weight is an optional parameter. If it is omitted it indicates that this property of the rendition is specified by the emphasis attribute rather than the font attribute of the display object array element concerned. If the emphasis scheme does not have provision for the specification of weight, when this parameter is omitted then the weight is device-dependent.

11.2.3 Proportionate width

Proportionate width is specified in ISO/IEC 9541-1 by an integer code, with one of the following values:

0 — not applicable;

1 — ultra condensed;

2 — extra condensed;

3 — condensed;

4 — semi condensed;

5 — medium;

6 — semi expanded;

7 — expanded;

8 — extra expanded;

9 — ultra expanded.

Values 1-9 are ordered by increasing width. Within this assignment type, proportionate width is an optional parameter. If it is omitted it indicates that this property of the rendition is specified by the emphasis attribute rather than the font attribute of the display object array element concerned. If the emphasis scheme does not have provision for the specification of proportionate width, when this parameter is omitted then the proportionate width is device-dependent.

11.2.4 Structure

Structure is specified in ISO/IEC 9541-1 by an integer code, with one of the following values:

0 — undefined or not applicable;

1 — solid, the shape containing no voids or patterns within the strokes;

2 — outline, the shape including only the outer edges of the strokes.

Within this assignment type, structure is an optional parameter. If it is omitted it indicates that this property of the rendition is specified by the emphasis attribute rather than the font attribute of the display object array element concerned. If the emphasis scheme does not have provision for the specification of structure, when this parameter is omitted then the structure is device-dependent.

11.2.5 Design group

The design group of a font resource is specified in ISO/IEC 9541-1 by an ordered list of three integer codes which give successive levels of refinement. The highest, most general level of the hierarchy is the ISO Class, the second level is the ISO Subclass and the third, most specific level is the ISO Specific Group. The ISO Class alone is sufficient for VT usage; this is specified by giving zero values to the subclass and specific group components. The defined classes and

Copyright International Organization for Standardization
Provided by IHS under license with ISO
No reproduction or networking permitted without license from IHS
Not for Resale

their encodings are as follows, where the descriptions are taken from annex A to ISO/IEC 9541-1:

1.0.0 Uncials class. Typefaces in this general category use as a source of their design, writing hands of Europe used during the 6th to the 9th Century.

2.0.0 Inscriptionals class. Latin alphabets of this general class have the characteristics of having been cut in stone. There are only upper case letters and they are generally based on the proportions of the classic Roman inscriptional letter form, *e.g.* having a narrow "E", "F" and "L" and a sweeping tail on the "R".

3.0.0 Blackletters Class. Typefaces of this general category have designs which show characteristics resembling those of the writing hands of the German Monasteries circa the 12th to the 14th Century. Or, they are based on the typestyle designs of the German printers of the late 1400's.

4.0.0 Serifs Class. Typefaces in this general category have designs which have serifs, and are not classed in the Uncials, Inscriptionals, Blackletters or Ornamentals.

This class includes the Japanese Mincho subclass. This has thick vertical strokes and thin horizontal strokes. There is a noticeable wedge shape ending on the right end of the horizontal strokes.

5.0.0 Sans Serif Class. Typefaces in this general category have designs that do not have serifs, and are not Scripts or Ornamentals.

The Gothic and Geometric subclasses of this class include Specific Groups appropriate to Japanese typefaces.

6.0.0 Scripts Class. These faces are designed to resemble handwriting.

This class includes the Japanese Soft Brush subclass. The characteristics of this subclass are that the strokes are brush-like. The designs are not written with a pen, and therefore the edges of the stems and strokes are not as sharp.

7.0.0 Ornamentals Class. Typefaces that were meant for display (not meant for straight matter composition text, *e.g.* headlines) and can be highly decorated or stylized and cannot fit into any of the other categories.

8.0.0 Symbols and Ornaments Class. This class is reserved for future assignment within ISO/IEC 9541-1.

Within this assignment type, the design group is an optional parameter. If it is omitted it indicates that this property of the rendition is specified by the emphasis attribute rather than the font attribute of the display object array element concerned. If the emphasis scheme does not have provision for the specification of typeface design, when this parameter is omitted then the design group is device-dependent.

11.2.6 Glyph complement

The glyph complement of a font resource is the set of all distinct glyphs contained in any writing mode of the font resource. It is specified in ISO/IEC 9541-1 through use of registered names for glyph collections and for individual glyphs. Preference is given within ISO/IEC 9541-1 to the use of glyphs and glyph collections that are registered in accordance with ISO/IEC 10036.

Within this font assignment type, the glyph complement property of a font assignment value is determined jointly by the character-repertoire with which it is associated and by the real display device concerned. A character-repertoire is defined for use within the VT service by reference to one or more coded character sets in a manner determined by the repertoire assignment type concerned. The elements of a VT character-repertoire are therefore characters as defined in ISO/IEC 10646-1. A real display device will represent each such character on its presentation surface by means of an appropriate glyph as defined in ISO/IEC 9541-1.

This font assignment type permits the assignment of glyphs to characters to be an implementation-specific assignment dependent on the device concerned. The collection of all glyphs assigned to the characters of the appropriate character-repertoire then implicitly becomes the glyph complement of the font assignment value concerned. This font resource property is therefore completely determined within the VTE and so does not occur as a parameter of the font assignment value within this font assignment type.

NOTE — The mapping of characters to glyphs is an issue of current concern to SC2 and SC18 of ISO/IEC JTC1. The document ISO/IEC JTC1/SC2/WG2 N915 of 1993-09-27 is a working draft of a Technical Report on the character-glyph model. One of its aims is to ensure that each coded character in ISO/IEC 10646 can be represented by at least one glyph registered in accordance with ISO/IEC 10036. Implementors of this font assignment type are recommended to take account of such developments when making assignments of glyphs to characters.

11.2.7 Nominal writing mode

The nominal writing mode of a font resource is specified in ISO/IEC 9541-1 by a structured-name. The object specific element of a structured-name is the object name, which consists of a sequence of one or more components, each of which is either numeric or alphanumeric. The structured-names defined for use as writing mode names within this assignment type have three object name components, the first being alphanumeric and the second and third being numeric.

The first component is one of the following two of the three object names for writing modes that are defined in 8.7.1.1 of ISO/IEC 9541-1:

LEFT-TO-RIGHT — A mode for normal setting of text in a writing system whose nominal escapement is in a left-to-right, horizontal direction, *e.g.* Latin, Cyrillic, Greek, horizontal Kanji/Kana;

RIGHT-TO-LEFT — A mode for normal setting of text in a writing system whose nominal escapement direction is in a right-to-left, horizontal direction, *e.g.* Hebrew, Arabic.

Copyright International Organization for Standardization
Provided by IHS under license with ISO
No reproduction or networking permitted without license from IHS
Not for Resale

The third writing mode defined in ISO/IEC 9541-1 is TOP-TO-BOTTOM, but this mode is not available within this assignment type.

The second component is the width of the character cell of the font as an integer multiple of the width of the standard VT character-box as described in 11.1.2. In clause 12 below, this integer value will be referenced as CWidth.

The third component is the height of the character cell of the font as an integer multiple of the height of the standard VT character-box as described in 11.1.2. In clause 12 below, this integer value will be referenced as CHeight.

The formal definition of character cell size within the context of ISO/IEC 9541-1 is given in 12.2.2 below. It is implicit in this definition that the size of the character cell is an indication also of the size of the individual glyph images of the font resource. A double-width character cell therefore implies that the images will also be double-width glyphs and not merely single-width glyphs with additional spacing. This property is therefore closely related to the proportionate width property of clause 11.2.3. Within this assignment type, it is intended that the proportionate width property should refine the control offered by the character cell size specification. For example, a standard character cell could be used for both medium and condensed Latin scripts while a double-width character cell could be used for both semi expanded and expanded glyphs. Proportionate width is specified relative to the nature of the glyphs of the font, so that for example a double-width character cell should be appropriate both for an expanded width Latin font and for a medium width Kanji font.

Within this assignment type, the nominal writing mode is an optional parameter. If it is omitted then the writing mode used is device-dependent. The nature of writing modes does not make it appropriate for the choice of mode to be controlled by the emphasis attribute.

12 Writing mode specification

The model used in this assignment type is of the simultaneous use of several character cell fonts which need not all have the same size of character cell. Clause 11.1.2 specifies the standard character cell and clause 11.2.7 specifies how the cell size for individual fonts is to be represented through the nominal writing mode name.

This clause gives the formal specification of each writing mode in terms of the modal font properties of ISO/IEC 9541-1. These values are conveyed implicitly through invocation of this assignment type with the appropriate nominal writing mode. They do not appear explicitly in the abstract syntax of clause 14.

12.1 Glyph coordinate system

Character cell fonts are described in 8.7.1.3 of ISO/IEC 9541-1 as special cases of monospaced fonts. For such fonts, all glyphs have the same escapement and no glyph shapes extend outside the character cell. The formal characterisation of these properties requires a standard aspect ratio to be laid down for the standard character cell and a coordinate system to be set up for the description of positions relative to such a cell. Real display devices will have differing aspect ratios, but a standard model is required for the purposes of font description.

The width of the standard character cell will be taken as one-half of its height. This aspect ratio corresponds to that of the standard Elite typewriter font, which has a pitch of 12 characters per inch and a normal spacing of 6 lines per inch. Distances and displacements are specified in ISO/IEC 9541-1 as rational multiples of the body size (height measured in printing points or millimetres) of the font. For fonts not normally specified by body size, a nominal body size is required to be assigned. Within this assignment type the body size is not given a specific measurement but is instead taken to be the height of the standard character cell. The body size is also used as the unit of measurement in the glyph coordinate system. In these coordinates the positive *x* direction points to the right and the positive *y* direction points upwards. The position and size of a character cell relative to such axes is specified through the maximum font extents property, as described in 12.2.2 below.

12.2 Modal properties

12.2.1 Writing mode name

A writing mode for a font resource is specified in ISO/IEC 9541-1 by a list of properties, the first of which is the structured-name that serves to identify the mode. A structured-name consists of an owner name that identifies the naming authority, an object name that identifies the object relative to this naming authority, and optional descriptive messages.

This International Standardized Profile is the naming authority for the writing mode names that are defined in 11.2.7 for use as values of the nominal writing mode property. The ASN.1 object identifier for this naming authority is

{ iso(1) standard(0) 11186 1 }.

NOTE — Arcs from the root { iso standard 11186 1 } are assigned to specific objects elsewhere in this part of ISO/IEC ISP 11186.

12.2.2 Maximum font extents

For a character cell font as described in 11.1.2, this property specifies the four bounding edges of the character cell. It is specified in ISO/IEC 9541-1 by an ordered sequence of four rationals. These are the maximum and minimum values possible for the *x* and *y* coordinates of any point within the representation of any glyph of the font. Their values are determined within this assignment type by the two numeric elements of the writing mode name, as follows:

minimum *x* value = 0 (gives left-hand edge);

minimum *y* value = 0 (gives bottom edge);

maximum *x* value = CWidth/2 (gives right-hand edge);

maximum *y* value = CHeight/1 (gives top edge).

If the font attributes of the elements of an x-array of the Display Object do not all have the same value of CHeight, every element of the x-array shall be imaged in a character cell with the largest height of any element of this x-array. The images of elements of smaller height are not changed in presentation; they are located within the taller character cell in an implementation-dependent manner.

Copyright International Organization for Standardization
Provided by IHS under license with ISO
No reproduction or networking permitted without license from IHS
Not for Resale

B.5 Secure storage at the terminal

The procedure described in this annex for committed printing relies on there being secure storage available at the terminal. This is to hold the print image as bound data whilst the terminal and its host are in the ready state. The secure storage must survive loss of the VT-association which the CCA does not.

A number of commands are made available for the Printer CO for management of this secure storage:

– **copy** - copy the print image from the print region of the display object to secure storage.

– **print** - print from the secure storage - this also serves to clear the secure storage area. An attempt to print from secure storage when empty results in no action. This requirement will stop more than one print occurring of the same print image.

– **clear** - clear secure storage.

B.6 Transaction initialisation

In this scenario, it should be noted that from an OSI TP point of view, the terminal system does not act as transaction initiator, although in the literal sense, in many cases, the action of the operator at a terminal may cause a transaction to start. It is assumed that the TPSUI in the gateway partakes in a VT dialogue. This TPSUI may be one component of a larger distributed application. At some point the distributed application decides that a transaction should start. Figure B.1 shows the case where the gateway TPSUI is a leaf in a specific transaction.

B.7 Normal commitment

Figure B.2 illustrates the TP and VT primitive interactions during normal commitment for intermediate or leaf nodes.

During the active phase up to the receipt of the TP-PREPARE-ind primitive, print data received by this TPSUI, or generated by it, is passed to the terminal to be held in the print region of the display object.

NOTE – If the VT is attached to the root TPSUI, the TP-PREPARE-ind does not occur.

At the end of the active phase for S-mode VT profiles (forms or paged), WAVAR (VT token) would naturally reside with the gateway TPSUI since a form would have been filled in.

During the first phase of commitment up to the issuing of the TP-COMMIT-req primitive, the Printer CO is updated with the copy command. The issuance of the VT-DELIVER-req primitive ensures delivery of the PCO update and receipt of the VT-ACK-RECEIPT-ind primitive signals that the copy has completed (i.e. the bound data at the terminal has been secured and the terminal is in a position to print the information which has been stored). The TP-COMMIT-req primitive must not be issued by the gateway TPSUI until the VT-ACK-RECEIPT-ind primitive has been received.

During the second phase of commitment up to the issuing of the TP-DONE-req primitive, the Printer CO is updated with the print command. The issuance of the VT-DELIVER-ind primitive ensures delivery of the PCO update and receipt of the VT-ACK-RECEIPT signals that the print has completed (i.e. the terminal bound data has been released). This sequence may also occur during recovery scenarios and in TP dialogue loss scenarios when commitment can be decided. The VT primitive sequence occurs before the issuing of the TP-DONE-req primitive. The TP-DONE-req primitive may only be issued by the gateway TPSUI after it has received the VT-ACK-RECEIPT primitive and after it has released its own bound data.

Copyright International Organization for Standardization
Provided by IHS under license with ISO
No reproduction or networking permitted without license from IHS
Not for Resale

vt-b-font-adhoc defined in 18.3 of ISO 9040, the 'value' component is specified by an ASN.1 any type.

This assignment type requires that when the 'type' component takes the ASN.1 object identifier value specified herein in clause 9 then the value of this ASN.1 any type shall be a value of the type Font1-Description that is exported from the ASN.1 module ISP11186-FONT1 defined below. This type is an ASN.1 subtype of the parent type Font-Description that is exported from the ASN.1 module ISO-STANDARD-9541-FONT-ATTRIBUTE-SET defined in Annex A of ISO/IEC 9541-2. The module definition given below also imports a type definition from the module ISO9541-SN defined in Annex B of ISO/IEC 9541-2.

```
ISP11186-FONT1 { 1 0 11186 1 3 1 }
DEFINITIONS ::= BEGIN

EXPORTS
    Font1-Description;

IMPORTS
    Font-Description
        FROM ISO-STANDARD-9541-FONT-ATTRIBUTE-SET
            { 1 0 9541 2 2 }
    Structured-Name
        FROM ISO9541-SN
            { 1 0 9541 2 3 };

Font1-Description ::= Font-Description
    (WITH COMPONENTS {
        iso-standard-9541-posture (0..6)        OPTIONAL,
        iso-standard-9541-weight (0..9)         OPTIONAL,
        iso-standard-9541-propwidth (0..9)      OPTIONAL,
        iso-standard-9541-structure (0..2)      OPTIONAL,
        iso-standard-9541-dsngroup
            (WITH COMPONENTS {
                group-code (1..8),
                subgroup-code (0),
                specific-group-code (0) } )     OPTIONAL,
        iso-standard-9541-nomwrmode
            (WITH COMPONENTS {
                name-value (INCLUDES
                    Font1-wrmodenames) } )      OPTIONAL
    } )

Font1-wrmodenames ::= Structured-Name
    (WITH COMPONENTS {
        owner-name ({{ 1 0 11186 1 }})          PRESENT,
        object-name (SIZE (3))                  PRESENT
        -- the object-name shall be of the form specified
        -- in 11.2.7 of ISO/IEC ISP 11186-1.
    } )

END -- OF ISP11186-FONT1 DEFINITIONS
```

NOTE — The corrections to the ASN.1 type definitions of ISO/IEC 9541-2 that are contained in the corrigendum ISO/IEC 9541-2:1991/Cor.1:1993 do not affect the type definitions given above.

Copyright International Organization for Standardization
Provided by IHS under license with ISO
No reproduction or networking permitted without license from IHS
Not for Resale

© ISO/IEC

ICS 35.100

Descriptors: data processing, information interchange, network interconnection, open systems interconnection, character sets, definitions, international registers.

Price based on 10 pages

Copyright International Organization for Standardization
Provided by IHS under license with ISO
No reproduction or networking permitted without license from IHS

Not for Resale