INTERNATIONAL STANDARD

ISO/IEC 10090

First edition
1992-10-15

Information technology — 90 mm optical disk cartridges, rewritable and read only, for data interchange

Technologies de l'information — Cartouches pour disques optiques de diamètre 90 mm, *réinscriptibles et à lecture unique, pour échange de données*



Reference number
ISO/IEC 10090:1992(E)

Copyright International Organization for Standardization
Provided by IHS under license with ISO
No reproduction or networking permitted without license from IHS

Not for Resale

Contents

		Page
Section 1 - General		1
1	Scope	1
2	Conformance	1
3	Normative reference	1
4	Definitions	1
4.1	case	1
4.2	cyclic redundancy check (CRC)	2
4.3	embossed mark	2
4.4	entrance surface	2
4.5	error correction code (ECC)	2
4.6	field	2
4.7	format	2
4.8	groove	2
4.9	interleaving	2
4.10	Kerr rotation	2
4.11	land and groove	2
4.12	mark	2
4.13	optical disk	2
4.14	optical disk cartridge (ODC)	2
4.15	polarization	2
4.16	recording layer	2
4.17	Reed-Solomon code	2
4.18	rewritable optical disk	2
4.19	sector	2
4.20	substrate	2
4.21	track	2
4.22	zone	2
5	Conventions and notations	3
5.1	Representation of numbers	3
5.2	Names	3
6	List of acronyms	3
7	General description of the optical disk cartridge	3

© ISO/IEC 1992
All rights reserved. No part of this publication may be reproduced or utilized in any form or by any means, electronic or mechanical, including photocopying and microfilm, without permission in writing from the publisher.

ISO/IEC Copyright Office • Case Postale 56 • CH-1211 Genève 20 • Switzerland

Printed in Switzerland

Copyright International Organization for Standardization
Provided by IHS under license with ISO
No reproduction or networking permitted without license from IHS
Not for Resale

8	General requirements	**4**
8.1	Environments	**4**
8.1.1	Testing environment	**4**
8.1.2	Operating environment	**4**
8.1.3	Storage environment	**5**
8.1.4	Transportation	**5**
8.2	Temperature shock	**5**
8.3	Safety requirements	**5**
8.4	Flammability	**5**
9	Reference Drive	**5**
9.1	Optical system	**5**
9.2	Optical beam	**7**
9.3	Read channels	**7**
9.4	Tracking	**7**
9.5	Rotation of the disk	**7**
Section 2 - Mechanical and physical characteristics		**8**
10	Dimensional and physical characteristics of the case	**8**
10.1	General description of the case	**8**
10.2	Reference planes of the case	**8**
10.3	Dimensions of the case	**8**
10.3.1	Overall dimensions	**8**
10.3.2	Location hole	**9**
10.3.3	Alignment hole	**9**
10.3.4	Reference surfaces	**9**
10.3.5	Detents	**10**
10.3.6	Functional Areas	**10**
10.3.7	Spindle and head windows	**11**
10.3.8	Shutter	**12**
10.3.9	Path for shutter opener and shutter sensor notch	**13**
10.3.10	Mis-insert protections	**13**
10.3.11	Gripper slots	**14**
10.3.12	Label area	**14**
10.4	Mechanical characteristics	**14**
10.4.1	Material	**14**
10.4.2	Mass	**15**
10.4.3	Edge Distortion	**15**
10.4.4	Compliance	**15**
10.4.5	Shutter opening force	**15**
11	Dimensional, mechanical and physical characteristics of the disk	**27**
11.1	General description of the disk	**27**
11.2	Reference axis and plane of the disk	**27**
11.3	Dimensions of the disk	**28**
11.3.1	Hub dimensions	**28**

Copyright International Organization for Standardization
Provided by IHS under license with ISO
No reproduction or networking permitted without license from IHS
Not for Resale

11.3.2	Clamping zone	28
11.4	Mechanical characteristics	29
11.4.1	Material	29
11.4.2	Mass	29
11.4.3	Moment of inertia	29
11.4.4	Imbalance	29
11.4.5	Axial deflection	29
11.4.6	Axial acceleration	29
11.4.7	Radial runout	30
11.4.8	Radial acceleration	30
11.4.9	Tilt	30
11.5	Optical characteristics	30
11.5.1	Index of refraction	30
11.5.2	Thickness of the substrate	30
11.5.3	Birefringence	31
11.5.4	Reflectance	31
12	Interface between cartridge and drive	31
12.1	Clamping method	31
12.2	Clamping force	31
12.3	Capture cylinder (see figure 14)	31
12.4	Disk position in operating condition (see figure 14)	32
Section 3 - Format of information		34
13	Track geometry	34
13.1	Track shape	34
13.2	Direction of rotation	34
13.3	Track pitch	34
13.4	Track number	34
14	Track format	34
14.1	Track layout	34
14.2	Radial alignment	35
14.3	Sector Number	35
15	Sector format	35
15.1	Sector layout	35
15.2	Sector Mark	35
15.3	VFO fields	36
15.4	Address Mark (AM)	36
15.5	ID fields	36
15.6	Postambles (PA)	37
15.7	Offset Detection Field (ODF)	37
15.8	Gap	37
15.9	Sync	37
15.10	Data field	37
15.10.1	User data bytes	38
15.10.2	CRC and ECC bytes	38
15.10.3	Resync bytes	38
15.11	Buffer field	38

Copyright International Organization for Standardization
Provided by IHS under license with ISO
No reproduction or networking permitted without license from IHS
Not for Resale

16	Recording code	**38**
17	Format of the Information Zone	**39**
17.1	General description of the Information Zone	**39**
17.2	Division of the Information Zone	**39**
17.2.1	Initial Zone	**40**
17.2.2	Acquire Zone	**40**
17.2.3	Test Zones	**40**
17.2.4	Control Zones	**41**
17.2.5	Data Zone	**41**
17.2.6	Buffer Zone	**41**
18	Format of the Data Zone	**41**
18.1	Defect Management Areas (DMAs)	**42**
18.2	Disk Definition Sector (DDS)	**43**
18.3	Rewritable Zone	**45**
18.3.1	Location	**45**
18.3.2	Partitioning	**45**
18.4	Embossed Zone	**45**
18.4.1	Location	**45**
18.4.2	Partitioning	**46**
18.4.3	Parity Sectors	**46**
19	Defect management in the Rewritable Zone	**46**
19.1	Initialization of the disk	**47**
19.2	Certification	**47**
19.2.1	Slipping Algorithm	**47**
19.2.2	Linear Replacement Algorithm	**47**
19.3	Disks not certified	**47**
19.4	Write procedure	**48**
19.5	Primary Defect List (PDL)	**48**
19.6	Secondary Defect List (SDL)	**48**
Section 4 - Characteristics of embossed information		**50**
20	Method of testing	**50**
20.1	Environment	**50**
20.2	Use of the Reference Drive	**51**
20.2.1	Optics and mechanics	**51**
20.2.2	Read power	**51**
20.2.3	Read channels	**51**
20.2.4	Tracking	**51**
20.3	Definition of signals	**51**
21	Signals from grooves	**53**
21.1	Cross-track signal	**53**
21.2	Cross-track minimum signal	**53**
21.3	Push-pull signal	**53**
21.4	Divided push-pull signal	**54**

Copyright International Organization for Standardization
Provided by IHS under license with ISO
No reproduction or networking permitted without license from IHS
Not for Resale

21.5	On-track signal	54
21.6	Phase depth	55
21.7	Track location	55
22	Signals from Headers	55
22.1	Sector Mark	55
22.2	VFO1 and VFO2	55
22.3	Address Mark, ID field and Postamble	55
23	Signals from embossed Recording fields	56
Section 5 - Characteristics of the recording layer		56
24	Method of testing	56
24.1	Environment	56
24.2	Reference Drive	56
24.2.1	Optics and mechanics	56
24.2.2	Read power	56
24.2.3	Read channel	56
24.2.4	Tracking	57
24.3	Write conditions	57
24.3.1	Write pulse	57
24.3.2	Write power and pulse width	57
24.3.3	Write magnetic field	58
24.4	Erase conditions	58
24.4.1	Erase power	58
24.4.2	Erase magnetic field	58
24.5	Definition of signals	58
25	Magneto-optical characteristics	59
25.1	Figure of merit	59
25.2	Imbalance of the magneto-optical signal	59
26	Write characteristics	59
26.1	Resolution	59
26.2	Narrow-band signal-to-noise ratio	59
26.3	Cross-talk	60
27	Erase characteristics	60
Section 6 - Characteristics of user data		61
28	Method of testing	61
28.1	Environment	61
28.2	Reference Drive	61
28.2.1	Optics and mechanics	61
28.2.2	Read power	61
28.2.3	Read amplifiers	61
28.2.4	Analog-to-binary converters	61
28.2.5	Error correction	62
28.2.6	Tracking	62
29	Minimum quality of a sector	62
29.1	Headers	62

Copyright International Organization for Standardization
Provided by IHS under license with ISO
No reproduction or networking permitted without license from IHS
Not for Resale

29.1.1	Sector Mark	62
29.1.2	ID fields	62
29.2	User-written data	62
29.3	Embossed data	62
30	Data interchange requirements	62
30.1	Tracking	62
30.2	User-written data	63
30.3	Embossed data	63
30.4	Quality of disk	63

Annexes

A - Edge distortion test	64
B - Compliance test	65
C - Track deviation measurement	67
D - CRC for ID fields	71
E - Format of the Data field of a sector	72
F - Contents of the Control Zones	76
G - Guidelines for sector replacement	84
H - Measurement of the figure of merit	84
J - Read power, write power and erase power	85
K - Test method for measuring the adsorbent force of the hub	86
L - Derivation of the operating climatic environment	88
M - Air cleanliness class 100 000	92
N - Position of the cartridge relative to the reference planes	93
P - Transportation	94
Q - Office environment	94
R - Relaxation by zones of the requirements for signals	95

Copyright International Organization for Standardization
Provided by IHS under license with ISO
No reproduction or networking permitted without license from IHS
Not for Resale

Foreword

ISO (the International Organization for Standardization) and IEC (the International Electrotechnical Commission) form the specialized system for worldwide standardization. National bodies that are members of ISO or IEC participate in the development of International Standards through technical committees established by the respective organization to deal with particular fields of technical activity. ISO and IEC technical committees collaborate in fields of mutual interest. Other international organizations, governmental and non-governmental, in liaison with ISO and IEC, also take part in the work.

In the field of information technology, ISO and IEC have established a joint technical committee, ISO/IEC JTC1. Draft International Standards adopted by the joint technical committee are circulated to national bodies for voting. Publication as an International Standard requires approval by at least 75% of the national bodies casting a vote.

International Standard ISO/IEC 10090 was prepared by the European Computer Manufacturers Association (as Standard ECMA-154) and was adopted, under a special "fast-track procedure", by Joint Technical Committee ISO/IEC JTC1, *Information technology* in parallel with its approval by national bodies of ISO and IEC.

Annexes A, B, D, E, F, H, K, M, N and R form an integral part of this International Standard. Annexes C, G, J, L, P and Q are for information only.

Copyright International Organization for Standardization
Provided by IHS under license with ISO
No reproduction or networking permitted without license from IHS
Not for Resale

Introduction

This International Standard specifies the characteristics of 90 mm optical disk cartridges (ODCs) of the type providing for data to be written, read and erased many times using the thermo-magnetic and magneto-optical effects.

A part or all of the optical disk may be pre-recorded and be reproduced by stamping or other means. This information is read without recourse to the magneto-optical effect.

This International Standard together with a standard for volume and file structure provides for full data interchange between data processing systems. Interchange involves the ability to write, read and erase data without introducing any error.

Copyright International Organization for Standardization
Provided by IHS under license with ISO
No reproduction or networking permitted without license from IHS
Not for Resale

Information technology - 90 mm optical disk cartridges, rewritable and read only, for data interchange

Section 1 - General

1 Scope

This International Standard specifies

- the conditions for conformance testing and the Reference Drive;
- the mechanical and physical characteristics of the cartridge, so as to provide mechanical interchangeability between data processing systems;
- the format of the information on the disk, both embossed and user-written;
- the characteristics of the embossed information on the disk;
- the magneto-optical characteristics of the disk, enabling processing systems to write data onto the disk;
- the minimum quality of user-written data on the disk, enabling data processing systems to read data from the disk.

2 Conformance

A 90 mm optical disk cartridge is in conformance with this International Standard if it meets all mandatory requirements specified herein.

Annex R specifies the zones of the disk in which the requirements for the signal characteristics given in the body of this International Standard shall be met, and the zones in which a relaxation of these requirements is permitted.

A drive claiming conformance with this International Standard shall be able, in the operating environment, to write on any optical disk cartridge which is in conformance with this International Standard, and to read from any optical disk cartridge which is in conformance with this International Standard.

A drive shall not claim conformance if it cannot accept the full range of media conforming to this International Standard but only a specific sub-set of it.

3 Normative reference

The following standard contains provisions which, through reference in this text, constitute provisions of this International Standard. At the time of publication, the edition indicated was valid. All standards are subject to revision, and parties to agreements based on this International Standard are encouraged to investigate the possibility of applying the most recent edition of the standard listed below. Members of IEC and ISO maintain registers of currently valid International Standards.

IEC 950:1991, *Safety of information technology equipment, including electrical business equipment.*

4 Definitions

For the purpose of this International Standard the following definitions apply.

4.1 case: The housing for an optical disk, that protects the disk and facilitates disk interchange.

Copyright International Organization for Standardization
Provided by IHS under license with ISO
No reproduction or networking permitted without license from IHS
Not for Resale

4.2 cyclic redundancy check (CRC): A method for detecting errors in data.

4.3 embossed mark: A mark so formed as to be unalterable by magneto-optical means.

4.4 entrance surface: The surface of the disk on to which the optical beam first impinges.

4.5 error correction code (ECC): An error-detecting code designed to correct certain kinds of errors in data.

4.6 field: A subdivision of a sector.

4.7 format: The arrangement or layout of information on the disk.

4.8 groove: See 4.11.

4.9 interleaving: The process of allocating the physical sequence of units of data so as to render the data more immune to burst errors

4.10 Kerr rotation: The rotation of the plane of polarization of an optical beam upon reflection from the recording layer, as caused by the magneto-optical effect.

4.11 land and groove: A trench-like feature of the disk, applied before the recording of any information, and used to define the track location. The groove is located nearer to the entrance surface than the land with which it is paired to form a track.

4.12 mark: A feature of the recording layer which may take the form of a magnetic domain, a pit, or any other type or form that can be sensed by the optical system. The pattern of marks represents the data on the disk.

Note 1 - Subdivisions of a sector which are named 'mark' are not marks in the sense of this definition.

4.13 optical disk: A disk that will accept and retain information in the form of marks in a recording layer, that can be read with an optical beam.

4.14 optical disk cartridge (ODC): A device consisting of a case containing an optical disk.

4.15 polarization: The direction of polarization of an optical beam is the direction of the electric vector of the beam.

Note 2 - The plane of polarization is the plane containing the electric vector and the direction of propagation of the beam. The polarization is right-handed when to an observer looking in the direction of propagation of the beam, the end-point of the electric vector would appear to describe an ellipse in the clockwise sense.

4.16 recording layer: A layer of the disk on, or in, which data is written during manufacture and/or use.

4.17 Reed-Solomon code: An error detection and/or correction code which is particularly suited to the correction of errors which occur in bursts or are strongly correlated.

4.18 rewritable optical disk: An optical disk in which data in specified areas can be written, erased and rewritten by an optical beam.

4.19 sector: The smallest addressable part of a track in the Information Zone of a disk that can be accessed independently of other addressable parts of the zone.

4.20 substrate: A transparent layer of the disk, provided for mechanical support of the recording layer, through which the optical beam accesses the recording layer.

4.21 track: The path which is to be followed by the focus of the optical beam during one revolution of the disk.

4.22 zone: An annular area of the disk.

Copyright International Organization for Standardization
Provided by IHS under license with ISO
No reproduction or networking permitted without license from IHS
Not for Resale

5 Conventions and notations

5.1 Representation of numbers

- A measured value is rounded off to the least significant digit of the corresponding specified value. It implies that a specified value of 1,26 with a positive tolerance of + 0,01, and a negative tolerance of -0,02 allows a range of measured values from 1,235 to 1,275.
- Letters and digits in parentheses represent numbers in hexadecimal notation.
- The setting of a bit is denoted by ZERO or ONE.
- Numbers in binary notation and bit combinations are represented by strings of ZEROs and ONEs.
- Numbers in binary notation and bit combinations are shown with the most significant bit to the left.
- Negative values of numbers in binary notation are given in TWO's complement.
- In each field the data is recorded so that the most significant byte (byte 0) is recorded first. Within each byte the least significant bit is numbered 0 and is recorded last, the most significant bit (numbered 7 in an 8-bit byte) is recorded first. This order of recording applies also to the data input of the Error Detection and Correction circuits and to their output.

5.2 Names

The names of entities, e.g. specific tracks, fields, etc., are given with a capital initial.

6 List of acronyms

AM	Address Mark
CCS	Continuous Composite Servo (tracking method)
CRC	Cyclic Redundancy Check
DDS	Disk Definition Sector
DMA	Defect Management Area
ECC	Error Correction Code
FA1	Functional Area 1
FA2	Functional Area 2
ID	Identifier
LSB	Least Significant Byte
MSB	Most Significant Byte
ODC	Optical Disk Cartridge
ODF	Offset Detection Field
PA	Postamble
PDL	Primary Defect List
RLL(2,7)	Run Length Limited (code)
SDL	Secondary Defect List
SM	Sector Mark
VFO	Variable Frequency Oscillator

7 General description of the optical disk cartridge

The optical disk cartridge which is the subject of this International Standard consists of a case containing an optical disk.

The case is a protective enclosure for the disk. It has access windows covered by a shutter. The windows are automatically uncovered by the drive when the cartridge is inserted into it.

Copyright International Organization for Standardization
Provided by IHS under license with ISO
No reproduction or networking permitted without license from IHS
Not for Resale

The optical disk is recordable on one side. Data can be written onto the disk as marks in the form of magnetic domains in the recording layer and can be erased from it with a focussed optical beam, using the thermo-magnetic effect. The data can be read with a focussed optical beam, using the magneto-optical effect. The beam accesses the recording layer through the transparent substrate of the disk.

Part of the disk or the entire disk may contain read-only data in the form of pits embossed by the manufacturer. This data can be read using the diffraction of the optical beam by the embossed pits.

8 General requirements

8.1 Environments

8.1.1 Testing environment

The test environment is the environment where the air immediately surrounding the optical disk cartridge has the following properties:

Temperature	: 23 °C ± 2 °C
Relative humidity	: 45 % to 55 %
Atmospheric pressure	: 60 kPa to 106 kPa
Air cleanliness	: Class 100 000 (see annex M)

No condensation on or in the optical disk cartridge shall occur. Before testing, the optical disk cartridge shall be conditioned in this environment for 48 h minimum. It is recommended that, before testing, the entrance surface of the optical disk shall be cleaned according to the instructions of the manufacturer of the disk.

Unless otherwise stated, all tests and measurements shall be made in this test environment.

8.1.2 Operating environment

This International Standard requires that an optical disk cartridge which meets all requirements of this International Standard in the specified test environment provides data interchange over the specified ranges of environmental parameters in the operating environment.

The operating environment is the environment where the air immediately surrounding the optical disk cartridge has the following properties:

Temperature	: 5 °C to 50 °C
Relative humidity	: 3 % to 85 %
Absolute humidity	: 1 g/m^3 to 30 g/m^3
Atmospheric pressure	: 60 kPa to 106 kPa
Temperature gradient	: 10 °C/h max.
Relative humidity gradient	: 10 %/h max.
Air cleanliness	: Office environment (see annex Q)
Magnetic field strength at the recording layer for any condition under which a beam is in focus	: 32 000 A/m max.
Magnetic field strength at the recording layer during any other condition	: 48 000 A/m max.

No condensation on or in the optical disk cartridge shall occur. If an optical disk cartridge has been exposed to conditions outside those specified in this clause, it shall be acclimatized in an allowed operating environment for at least 2 h before use (see also annex L).

--`,,```,,,,````-`-`,,`,,`,`,,`---

Copyright International Organization for Standardization
Provided by IHS under license with ISO
No reproduction or networking permitted without license from IHS
Not for Resale

8.1.3 Storage environment

The optical disk cartridge without any protective enclosure shall not be stored in an environment outside the range allowed for storage. The storage environment is defined as an environment where the air immediately surrounding the optical disk cartridge has the following properties:

Temperature	: -10 °C to 50 °C
Relative humidity	: 3 % to 90 %
Absolute humidity	: 1 g/m^3 to 30 g/m^3
Atmospheric pressure	: 60 kPa to 106 kPa
Temperature gradient	: 15 °C/h max.
Relative humidity gradient	: 10 %/h max.
Air cleanliness	: Office environment (see annex Q)
Magnetic field strength at the recording layer	: 48 000 A/m max.

No condensation on or in the optical disk cartridge shall occur.

8.1.4 Transportation

This International Standard does not specify requirements for transportation; guidance is given in annex P.

8.2 Temperature shock

The optical disk cartridge shall withstand a temperature shock of up to 20 °C when inserted into, or removed from, the drive.

8.3 Safety requirements

The cartridge shall satisfy the safety requirements of IEC 950, when used in the intended manner or in any foreseeable use in an information processing system.

8.4 Flammability

The cartridge and its components shall be made from materials that comply with the flammability class for HB materials, or better, as specified in IEC 950.

9 Reference Drive

The Reference Drive is a drive several critical components of which have well defined properties and which is used to test write, read and erase parameters of the disk for conformance to this International Standard. The critical components vary from test to test. This clause gives an outline of all components; components critical for tests in specific clauses only are specified in these clauses.

9.1 Optical system

The basic set-up of the optical system of the Reference Drive used for measuring the write, read and erase parameters is shown in figure 1. Different components and locations of components are permitted, provided that the performance remains the same as that of the set-up in figure 1. The optical system shall be such that the detected light reflected from the entrance surface of the disk is minimized so as not to influence the accuracy of the measurements.

Copyright International Organization for Standardization
Provided by IHS under license with ISO
No reproduction or networking permitted without license from IHS
Not for Resale

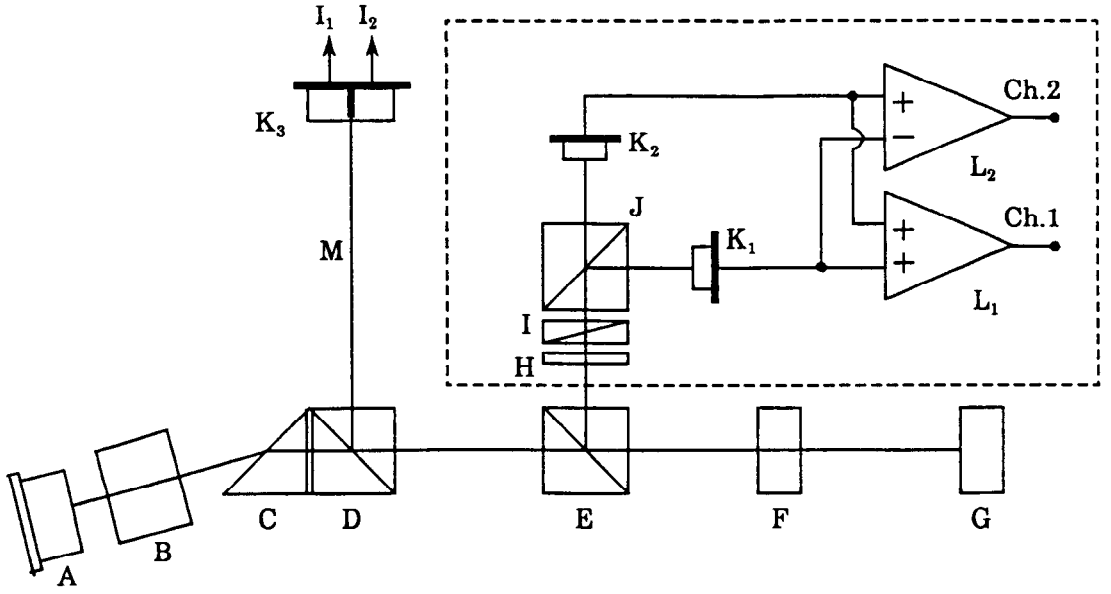

A	Laser diode	G	Optical disk
B	Collimator lens	H	Optional half-wave plate
C	Optional shaping prism	I	Phase retarder
Ch.1	Channel 1	J	Polarizing beam splitter
Ch.2	Channel 2	K_1,K_2	Photodiodes for channels 1 and 2
D	Beam splitter	K_3	Split photodiode
E	Polarizing beam splitter	L_1,L_2	d.c.-coupled amplifiers
F	Objective lens	M	Tracking channel (see 20.3)

Figure 1 - Optical system of the Reference Drive

In the absence of polarization changes in the disk, the polarizing beam splitter J shall be aligned to make the signal of detector K_1 equal to that of detector K_2. The direction of polarization in this case is called the neutral direction. The phase retarder I shall be adjusted such that the optical system does not have more than 2,5° phase retardation between the neutral polarization and the polarization perpendicular to it. This position of the retarder is called the neutral position.

The phase retarder can be used for the measurement of the narrow-band signal-to-noise ratio (see 26.2).

The beam splitter J shall have a p-s intensity reflectance ratio of at least 100.

The beam splitter E shall have an intensity reflectance R_p from F to H of nominally 0,30 for the neutral polarization direction. The reflectance R_s for the polarization perpendicular to the neutral direction shall be nominally 0,95. The actual value of R_s shall not be smaller than 0,90.

The imbalance of the magneto-optical signal is specified for a beam splitter with nominal reflectances. If the measurement is made on a drive with reflectances R_p' and R_s' for beam splitter E, then the measured imbalance shall be multiplied by

$$\sqrt{\frac{R_s R_p'}{R_p R_s'}}$$

to make it correspond to the nominal beam splitter E.

Copyright International Organization for Standardization
Provided by IHS under license with ISO
No reproduction or networking permitted without license from IHS
Not for Resale

The output of Channel 1 is the sum of the currents through photodiodes K_1 and K_2, and is used for reading embossed marks. The output of Channel 2 is the difference between photodiode currents, and is used for reading user-written marks with the magneto-optical effect.

9.2 Optical beam

The focussed optical beam used for writing, reading and erasing data shall have the following properties for both wavelengths:

a)	Wavelengths (λ)	780 nm $^{+\ 15\ nm}_{-\ 10\ nm}$ 825 nm $^{+\ 15\ nm}_{-\ 10\ nm}$
b)	Wavelength (λ) divided by the numerical aperture of the objective lens (NA)	λ/NA = 1,475 µm ± 0,035 µm for 780 nm λ/NA = 1,560 µm ± 0,040 µm for 825 nm
c)	Filling *D/W* of the aperture of the objective lens	1,0 max.
d)	Variance of the wavefront of the optical beam near the recording layer	λ^2 / 180 max.
e)	Polarization	parallel to the track
f)	Extinction ratio	0,01 max.
g)	The optical power and pulse width for writing, reading and erasing, and the magnetic field shall be as specified in 20.2.2, 24.2.2, 24.3, 24.4 and 28.2.2.	

D is the diameter of the lens aperture and *W* is the beam diameter of the Gaussian beam where the intensity is $1/e^2$ of the maximum intensity.

The extinction ratio is the ratio of the minimum over the maximum power observed behind a linear polarizer in the optical beam, which is rotated over at least 180°.

9.3 Read channels

Two read channels shall be provided to generate signals from the marks in the recording layer. Channel 1 shall be used for reading the embossed marks, using the diffraction of the optical beam by the marks. Channel 2 shall be used for reading the user-written marks, using the rotation of the polarization of the optical beam due to the magneto-optical effect of the marks. The read amplifiers after the photo-detectors in Channel 1 and Channel 2 shall have a flat response within ± 1 dB from 100 kHz to 11,6 MHz.

9.4 Tracking

The Tracking channel of the drive provides the tracking error signals to control the servos for the axial and radial tracking of the optical beam. The method of generating the axial tracking error is not specified for the Reference Drive. The radial tracking error is generated by a split photodiode detector in the tracking channel. The division of the diode runs parallel to the image of the tracks on the diode.

The requirements for the accuracy with which the focus of the optical beam must follow the tracks is specified in 20.2.4.

9.5 Rotation of the disk

The spindle shall position the disk as specified in 12.4. It shall rotate the disk at 30,0 Hz ± 0,3 Hz. The direction of rotation shall be counter-clockwise when viewed from the objective lens.

Copyright International Organization for Standardization
Provided by IHS under license with ISO
No reproduction or networking permitted without license from IHS
Not for Resale

Section 2 - Mechanical and physical characteristics

10 Dimensional and physical characteristics of the case

10.1 General description of the case (see figure 2)

The case is a rigid protective container of rectangular shape. It has a spindle window on Side A to allow the spindle of the drive to clamp the disk by its hub. Both Side A and Side B of the case have a head window, the one on Side A for the optical head of the drive, the other one on Side B for the magnetic head providing the necessary magnetic fields. A shutter uncovers the windows upon insertion into the drive, and automatically covers them upon removal from the drive. The case has features that enable a drive to reject a mis-inserted cartridge, write-inhibit and reflectance detection features, and gripper slots for an autochanger.

10.2 Reference planes of the case

The dimensions of the case shall be referred to three orthogonal reference planes X, Y and Z. The case shall be constrained such that four reference surfaces S_1 to S_4 on Side A of the case lie in plane Z when measuring those dimensions of the case in 10.3 which are referenced to this plane. The intersection of the three planes defines the centre of the location hole. The centre of the alignment hole shall lie in the X plane (see annex N). A dimension of a feature referenced to one of the planes is the shortest distance from the feature to the plane.

10.3 Dimensions of the case

The dimensions of the case shall be measured in the test environment. The dimensions of the case in an operating environment can be estimated from the dimensions specified in this clause.

10.3.1 Overall dimensions (see figure 3)

The total length of the case shall be

$$L_1 = 94{,}0 \text{ mm} \pm 0{,}3 \text{ mm}$$

The distance from the top of the case to reference plane X shall be

$$L_2 = 76{,}0 \text{ mm} \pm 0{,}2 \text{ mm}$$

The distance from the bottom of the case to reference plane X shall be

$$L_3 = 18{,}0 \text{ mm} \pm 0{,}2 \text{ mm}$$

The total width of the case shall be

$$L_4 = 90{,}0 \text{ mm}^{+0{,}0 \text{ mm}}_{-0{,}4 \text{ mm}}$$

The distance from the left hand side of the case to reference plane Y shall be

$$L_5 = 85{,}0 \text{ mm} \pm 0{,}3 \text{ mm}$$

The distance from the right hand side of the case to reference plane Y shall be

$$L_6 = 5{,}0 \text{ mm} \pm 0{,}1 \text{ mm}$$

The corner at the top shall be rounded with a radius

$$R_1 = 1{,}5 \text{ mm} \pm 0{,}2 \text{ mm}$$

and the two corners at the bottom with a radius

Copyright International Organization for Standardization
Provided by IHS under license with ISO
No reproduction or networking permitted without license from IHS
Not for Resale

$R_2 = 2{,}0 \text{ mm} \pm 0{,}2 \text{ mm}$

In the zones extending

$L_7 = 8{,}6 \text{ mm min.}$

from the left-hand and right-hand edges of the case, the thickness of the case shall be

$L_8 = 6{,}0 \text{ mm} \pm 0{,}2 \text{ mm}$

The eight long edges of the case shall be rounded with a radius

$$R_3 = 0{,}3 \text{ mm}^{+0{,}2 \text{ mm}}_{-0{,}0 \text{ mm}}$$

10.3.2 Location hole (see figure 3)

The centre of the location hole shall coincide with the intersection of the planes X, Y and Z. The diameter of the hole shall be

$$D_1 = 3{,}60 \text{ mm}^{+0{,}00 \text{ mm}}_{-0{,}06 \text{ mm}}$$

held to a depth

$L_9 = 1{,}5 \text{ mm min.}$

The location hole shall extend below plane Z by

$L_{10} = 4{,}0 \text{ mm min.}$

with a diameter equal to, or greater than D_1.

The location hole shall not extend through Side B.

The lead-in edges shall be rounded with a radius

$R_4 = 0{,}5 \text{ mm max.}$

10.3.3 Alignment hole (see figure 3)

The centre of the alignment hole shall lie in the X plane at a distance

$L_{11} = 80{,}0 \text{ mm} \pm 0{,}2 \text{ mm}$

from reference plane Y.

The alignment hole shall have a substantially rectangular shape. Its dimensions shall be

$$L_{12} = 3{,}60 \text{ mm}^{+0{,}00 \text{ mm}}_{-0{,}06 \text{ mm}}$$

$$L_{13} = 4{,}4 \text{ mm}^{+0{,}2 \text{ mm}}_{-0{,}0 \text{ mm}}$$

held to a depth L_9, below which the alignment hole shall extend to L_{10}, with dimensions equal to, or greater than, L_{12} and L_{13}, respectively.

The alignment hole shall not extend through Side B.

The lead-in edges shall be rounded with radius R_4.

10.3.4 Reference surfaces (see figure 4)

Side A of the case shall contain four reference surfaces S_1, S_2, S_3 and S_4.

Copyright International Organization for Standardization
Provided by IHS under license with ISO
No reproduction or networking permitted without license from IHS
Not for Resale

Surfaces S_1 and S_2 shall be circular with a diameter

$D_2 = 7{,}0$ mm min.

S_1 shall be centred on the location hole, and S_2 shall be centred on the alignment hole.

Surfaces S_3 and S_4 shall be circular with a diameter

$D_3 = 6{,}0$ mm min.

with their centres located at

$L_{14} = 54{,}0$ mm ± 0,2 mm

$L_{15} = 1{,}0$ mm ± 0,2 mm and

$L_{16} = 81{,}0$ mm ± 0,2 mm

No portion of the case or of the shutter mechanism (see 10.3.8) shall protrude more than

$L_{17} = 0{,}15$ mm max.

beyond plane Z.

10.3.5 Detents (see figure 5)

The case shall have two symmetrical detents intended for autoloading. Each detent shall extend from plane Z up to

$L_{18} = 5{,}0$ mm min.

and shall not extend through Side B.

Each detent is defined by a semi-circular section with a radius

$R_5 = 2{,}1$ mm ± 0,1 mm

which stretches out to the side of the case along two straight lines extending from the semi-circle. The radii of the two detents originate from

$L_{19} = 65{,}5$ mm ± 0,2 mm

$L_{20} = 4{,}0$ mm max.

$L_{21} = 84{,}0$ mm max.

The outside edges of the detents shall be rounded off by a radius

$R_6 = 0{,}5$ mm ± 0,2 mm

10.3.6 Functional Areas (see figure 6)

The case shall have an opening in Side A the length of which shall be

$L_{22} = 8{,}2$ mm min.

Its width shall be at least equal to L_{23}, and its centreline shall be located on the intersection of planes Y and Z.

Functional Area FA1 shall have the dimensions

$L_{23} = 4{,}4$ mm min.

$L_{24} = 3{,}6$ mm min.

Its centreline shall be in plane Z, and parallel to plane X at a distance

$L_{25} = 7{,}8$ mm ± 0,2 mm

Copyright International Organization for Standardization
Provided by IHS under license with ISO
No reproduction or networking permitted without license from IHS
Not for Resale

from plane X. Side B shall have an opening corresponding to the surface of Functional Area FA1.

Functional Area FA2 shall have the dimensions L_{23}, L_{24} and

L_{26} = 4,0 mm min.

Its centreline shall be in plane Z, and parallel to plane X at a distance

L_{27} = 12,8 mm ± 0,2 mm

There shall be no opening in Side B corresponding to Functional Area FA2.

The cartridge shall have a device capable of

- either closing FA1 or FA2,
- or closing both FA1 and FA2.

The two Functional Areas shall indicate the reflectance of the disk in the cartridge and whether or not writing on the disk is permitted, as specified in table 1 (see also figure 6).

Table 1 - Use of the Functional Areas FA1 and FA2

FA1	FA2	Writing	Reflectance	Type of Cartridge
Open	Closed	Inhibited	Low	- Rewritable with or without embossed zone, or
Closed	Open	Permitted		- fully embossed
Closed	Closed	Inhibited	High	fully embossed
Open	Open	Not specified by this International Standard		

The surface of the device shall be at a distance

L_{28} = 0,3 mm max.

from plane Z.

10.3.7 Spindle and head windows (see figure 7)

Side A of the case shall have a window to enable the spindle and the optical head of the drive to access the disk. The dimensions of the window are referenced to a centreline, located at a distance

L_{29} = 40,0 mm ± 0,2 mm

from plane Y. The width of the window shall be given by

$$L_{30} = 11{,}0 \text{ mm } {}^{+0{,}2 \text{ mm}}_{-0{,}0 \text{ mm}}$$

and

$$L_{31} = 11{,}0 \text{ mm } {}^{+0{,}2 \text{ mm}}_{-0{,}0 \text{ mm}}$$

The top of the window shall be given by radius

R_7 = 43,7 mm min.

originating from L_{29} and

Copyright International Organization for Standardization
Provided by IHS under license with ISO
No reproduction or networking permitted without license from IHS
Not for Resale

$L_{32} = 27{,}0 \text{ mm} \pm 0{,}2 \text{ mm}$

The area bounded by R_7 and the top of the case shall be recessed from plane Z by

$$L_{33} = 2{,}0 \text{ mm} \begin{matrix} +0{,}2 \text{ mm} \\ -0{,}0 \text{ mm} \end{matrix}$$

over the width of the window.

The bottom of the window shall be the arc of the semi-circle which smoothly joins the sides of the window. The centre of the semi-circle shall be defined by L_{29} and L_{32}.

Side B of the case shall have a window to enable the magnetic head of the drive to access the disk. The dimensions of the window are referenced to a centreline, located at a distance L_{29} from plane Y. The width of the window shall be given by L_{30} and L_{31}. The window shall extend from

$L_{34} = 40{,}0 \text{ mm max.}$

to the arc of R_7, originating from L_{29} and L_{32}.

The area bounded by R_7 and the top of the case shall be, over the width of the window, at a distance

$$L_{35} = 4{,}2 \text{ mm} \begin{matrix} +0{,}0 \text{ mm} \\ -0{,}4 \text{ mm} \end{matrix}$$

from plane Z.

The two inside corners shall be rounded with a radius

$R_8 = 2{,}0 \text{ mm max.}$

10.3.8 Shutter (see figure 8)

The case shall have a spring-loaded shutter designed to completely cover the spindle and head windows when closed. When open, the shutter shall expose the windows up to at least the minimum size allowed by the following dimensions, given in 10.3.7:

on Side A: from the semi-circle at the bottom of the window up to the top of the case, and from L_{30} to L_{31};

on Side B: from L_{34} up to the top of the case, and from L_{30} to L_{31};

on the top: from plane Z to L_{33}, from L_{30} to L_{31}, from L_{35} up to Side B, and from L_{30} to L_{31}.

The shutter shall be free to slide in a recessed area of the case in such a way as to ensure that the overall thickness of the case and shutter does not exceed L_8 by more than L_{17}.

The shutter shall have one edge against which the shutter opener of the drive can push to open the shutter. When the shutter is closed, this edge shall be

$$L_{36} = 79{,}0 \text{ mm} \begin{matrix} +0{,}0 \text{ mm} \\ -0{,}3 \text{ mm} \end{matrix}$$

from plane Y. A movement of the edge to

$L_{37} = 55{,}5 \text{ mm min.}$

shall be sufficient to open the windows to the minimum size specified in 10.3.8. It shall be possible to move the edge to

$L_{38} = 54{,}7 \text{ mm max.}$

without exceeding the shutter opening force as specified in 10.4.5, while leaving the minimum size window open.

Copyright International Organization for Standardization
Provided by IHS under license with ISO
No reproduction or networking permitted without license from IHS
Not for Resale

10.3.9 Path for shutter opener and shutter sensor notch (see figure 9)

The profile on the top of the case provides a path over which the shutter opener of the drive can travel.

The path shall run from

$$L_{39} = 81{,}0 \text{ mm} \pm 0{,}3 \text{ mm}$$

to

$$L_{40} = 57{,}5 \text{ mm} \begin{matrix} +0{,}3 \text{ mm} \\ -0{,}0 \text{ mm} \end{matrix}$$

at a distance

$$L_{41} = 74{,}0 \text{ mm} \pm 0{,}3 \text{ mm}$$

from plane X.

The lead-in edge at L_{39} shall be a ramp to the top of the case with an angle

$$A_1 = 45° \pm 5°$$

The path shall end in a notch with a width at the bottom from L_{40} to

$$L_{42} = 54{,}7 \text{ mm max.}$$

and a depth

$$L_{43} = 3{,}3 \text{ mm} \pm 0{,}2 \text{ mm}$$

below L_{41}. The lead-in edge at the right-hand side of the notch shall be rounded with a radius

$$R_9 = 1{,}2 \text{ mm} \pm 0{,}2 \text{ mm}$$

When the shutter edge is moved to L_{37}, a length of at least (L_{40} - L_{37}) of the notch shall be exposed. This enables a drive to confirm that the shutter is fully open.

10.3.10 Mis-insert protections (see figure 10)

The profile on the top of the case shall have two features to prevent the case from being inserted in the drive upside-down.

The first feature is a notch intended to capture and block the shutter opener of the drive if the case is loaded upside-down. It shall have a width from

$$L_{44} = 4{,}6 \text{ mm} \pm 0{,}2 \text{ mm}$$

to

$$L_{45} = 1{,}0 \text{ mm} \pm 0{,}2 \text{ mm}$$

and a depth

$$L_{46} = 3{,}1 \text{ mm} \pm 0{,}2 \text{ mm}$$

below the top of the case.

The right-hand edge of the notch shall be

$$L_{47} = 75{,}4 \text{ mm} \pm 0{,}2 \text{ mm}$$

above plane X.

The corners of this notch shall be rounded off by radii

$$R_{10} = 0{,}3 \text{ mm max.}$$

$$R_{11} = 0{,}5 \text{ mm} \pm 0{,}3 \text{ mm}$$

Copyright International Organization for Standardization
Provided by IHS under license with ISO
No reproduction or networking permitted without license from IHS
Not for Resale

The second feature is a chamfer and a tooth. If the case is correctly loaded, the chamfer pushes aside a possible pawl in the side of the sledge of the drive. If the case is loaded upside-down, the pawl catches the tooth and prevents further insertion of the case. The tooth is formed by the ramp specified in 10.3.10. The chamfer shall have an angle

$$A_2 = 45° \pm 2°$$

and a height

$$L_{48} = 5{,}0 \text{ mm} \pm 0{,}3 \text{ mm}$$

10.3.11 Gripper slots (see figure 11)

The case shall have two symmetrical gripper slots. The slot shall have a depth of

$$L_{49} = 2{,}5 \text{ mm} \begin{matrix} +\,0{,}3 \text{ mm} \\ -\,0{,}0 \text{ mm} \end{matrix}$$

from the edge of the case and a width of

$$L_{50} = 4{,}0 \text{ mm} \begin{matrix} +\,0{,}3 \text{ mm} \\ -\,0{,}0 \text{ mm} \end{matrix}$$

The lower edge of a slot shall be

$$L_{51} = 23{,}0 \text{ mm} \begin{matrix} +\,0{,}0 \text{ mm} \\ -\,0{,}3 \text{ mm} \end{matrix}$$

above the bottom of the case.

The corners of the gripper slots shall be rounded off by radii

$$R_{12} = 0{,}4 \text{ mm} \pm 0{,}2 \text{ mm}$$

$$R_{13} = 0{,}5 \text{ mm} \pm 0{,}2 \text{ mm}$$

10.3.12 Label area (see figure 12)

The case shall have one connected label area on Side A, the bottom and Side B, with dimensions

$$L_{52} = 4{,}0 \text{ mm} \pm 0{,}3 \text{ mm}$$

$$L_{53} = 76{,}0 \text{ mm} \pm 0{,}3 \text{ mm}$$

$$L_{54} = 30{,}0 \text{ mm} \pm 0{,}2 \text{ mm}$$

and

$$L_{55} = 1{,}2 \text{ mm} \pm 0{,}2 \text{ mm}$$

The four corners of the area shall be rounded with a radius

$$R_{14} = 2{,}0 \text{ mm max.}$$

When there is no label, the area shall be recessed by

$$L_{56} = 0{,}2 \text{ mm min. on all three sides.}$$

10.4 Mechanical characteristics

All requirements of this clause shall be met in the operating environment.

10.4.1 Material

The case shall be constructed from any suitable materials such that it meets the requirements of this International Standard.

Copyright International Organization for Standardization
Provided by IHS under license with ISO
No reproduction or networking permitted without license from IHS
Not for Resale

10.4.2 Mass

The mass of the case without the optical disk shall not exceed 50 g.

10.4.3 Edge distortion

The cartridge shall meet the requirement of the edge distortion test defined in annex A.

10.4.4 Compliance

The cartridge shall meet the requirement of the compliance (flexibility) test defined in annex B. The requirement guarantees that a cartridge can be constrained in the proper plane of operation within the drive.

10.4.5 Shutter opening force

The spring force on the shutter shall be such that the force required to open the shutter does not exceed 1,5 N. It shall be sufficiently strong to close a free-sliding shutter, irrespective of the orientation of the case.

Copyright International Organization for Standardization
Provided by IHS under license with ISO
No reproduction or networking permitted without license from IHS
Not for Resale

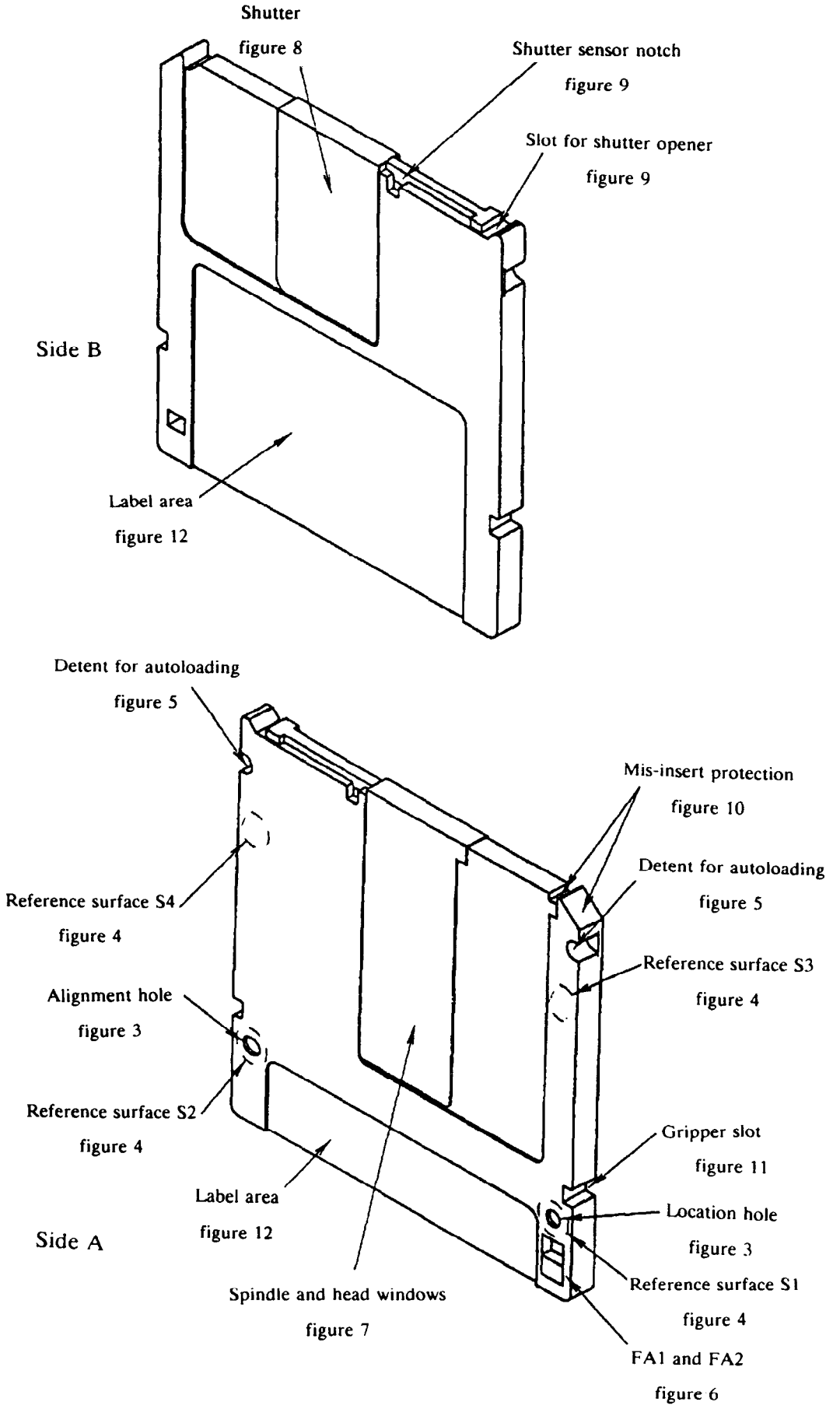

Figure 2 - General view of the case

Copyright International Organization for Standardization
Provided by IHS under license with ISO
No reproduction or networking permitted without license from IHS
Not for Resale

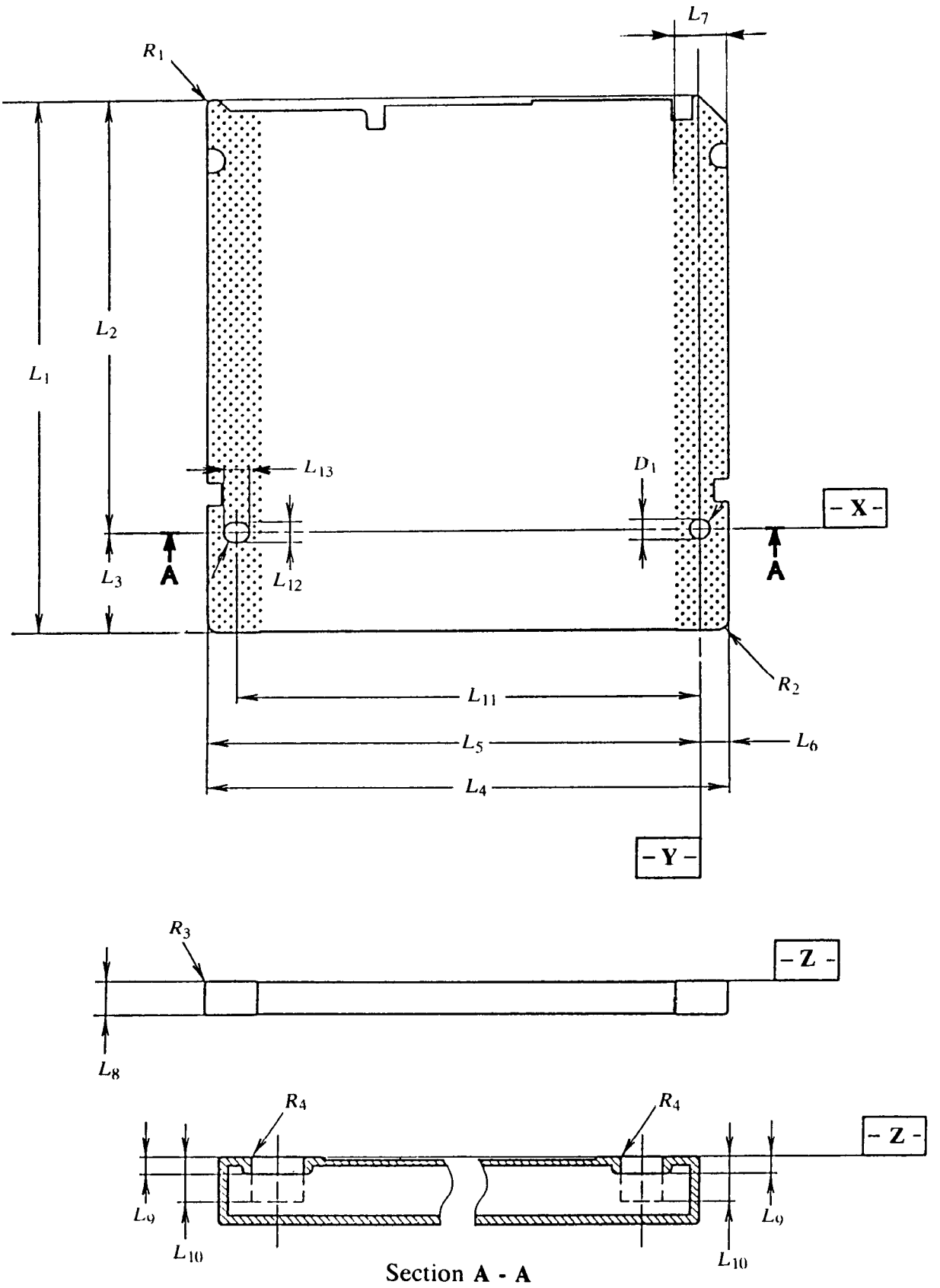

Figure 3 - Overall dimensions, viewed on Side A

Copyright International Organization for Standardization
Provided by IHS under license with ISO
No reproduction or networking permitted without license from IHS
Not for Resale

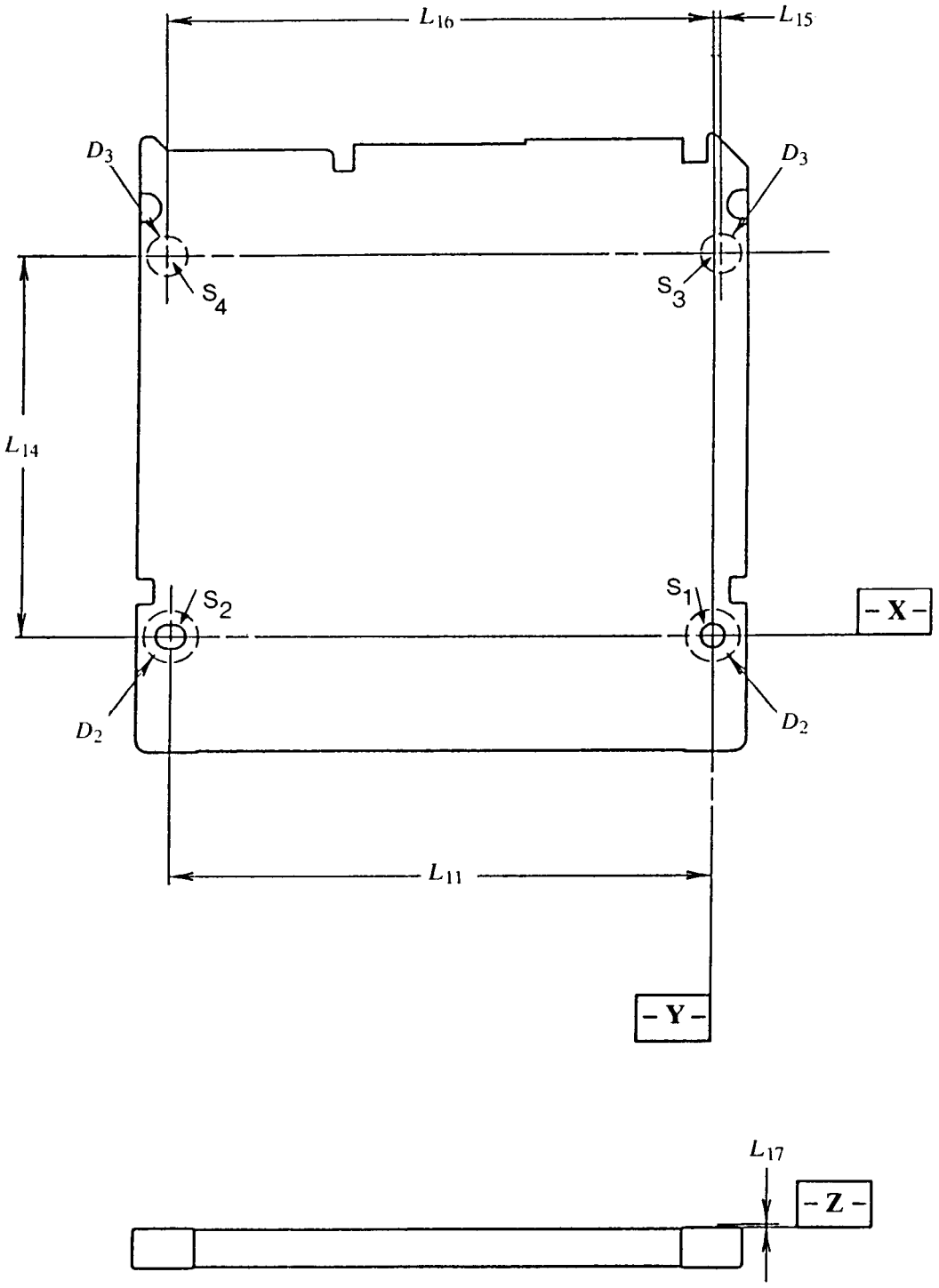

Figure 4 - Reference surfaces on Side A

Copyright International Organization for Standardization
Provided by IHS under license with ISO
No reproduction or networking permitted without license from IHS
Not for Resale

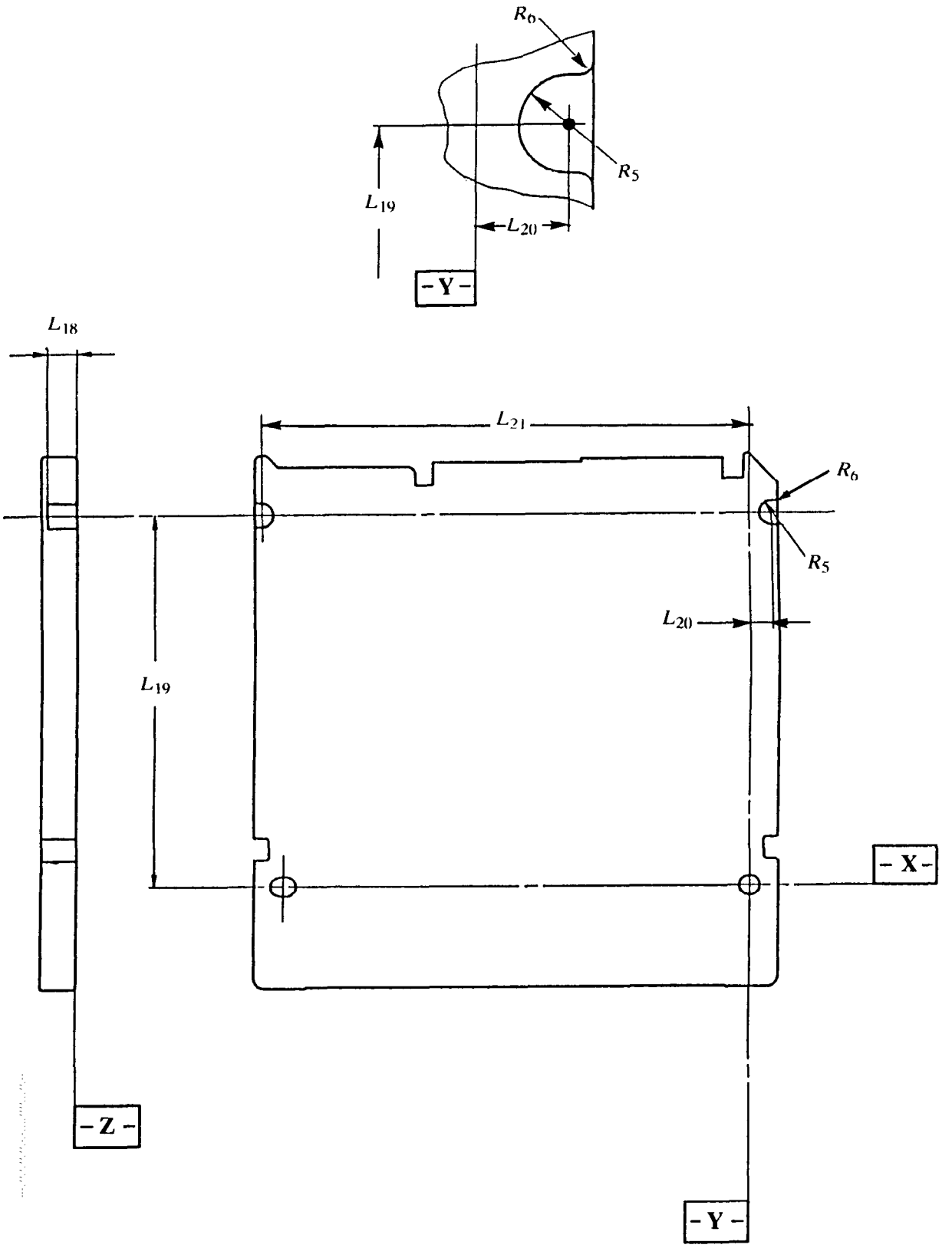

Figure 5 - Detents, seen on Side A

Copyright International Organization for Standardization
Provided by IHS under license with ISO
No reproduction or networking permitted without license from IHS
Not for Resale

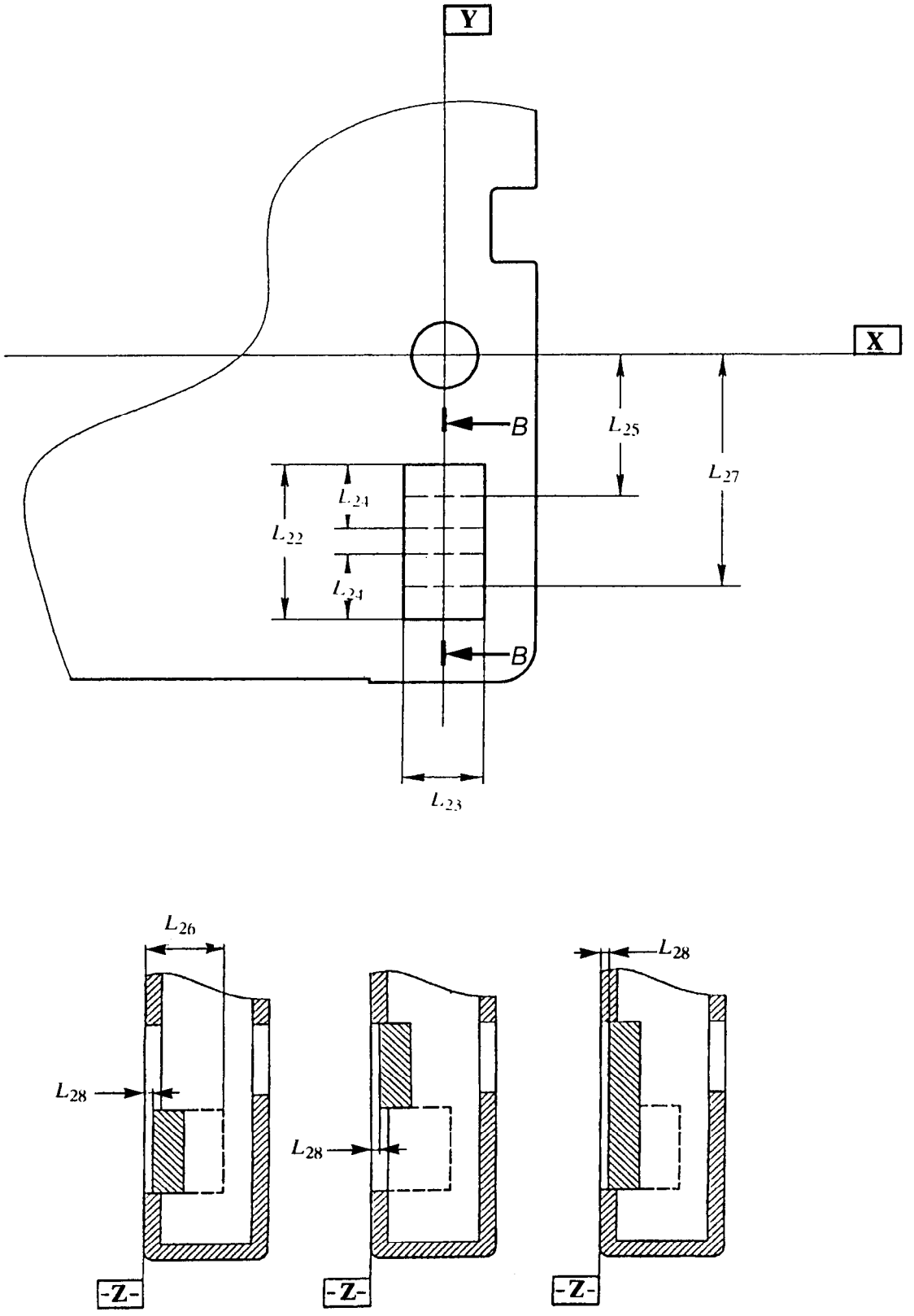

Figure 6 - Functional Areas FA1 and FA2, seen on Side A and in cross-section

Copyright International Organization for Standardization
Provided by IHS under license with ISO
No reproduction or networking permitted without license from IHS
Not for Resale

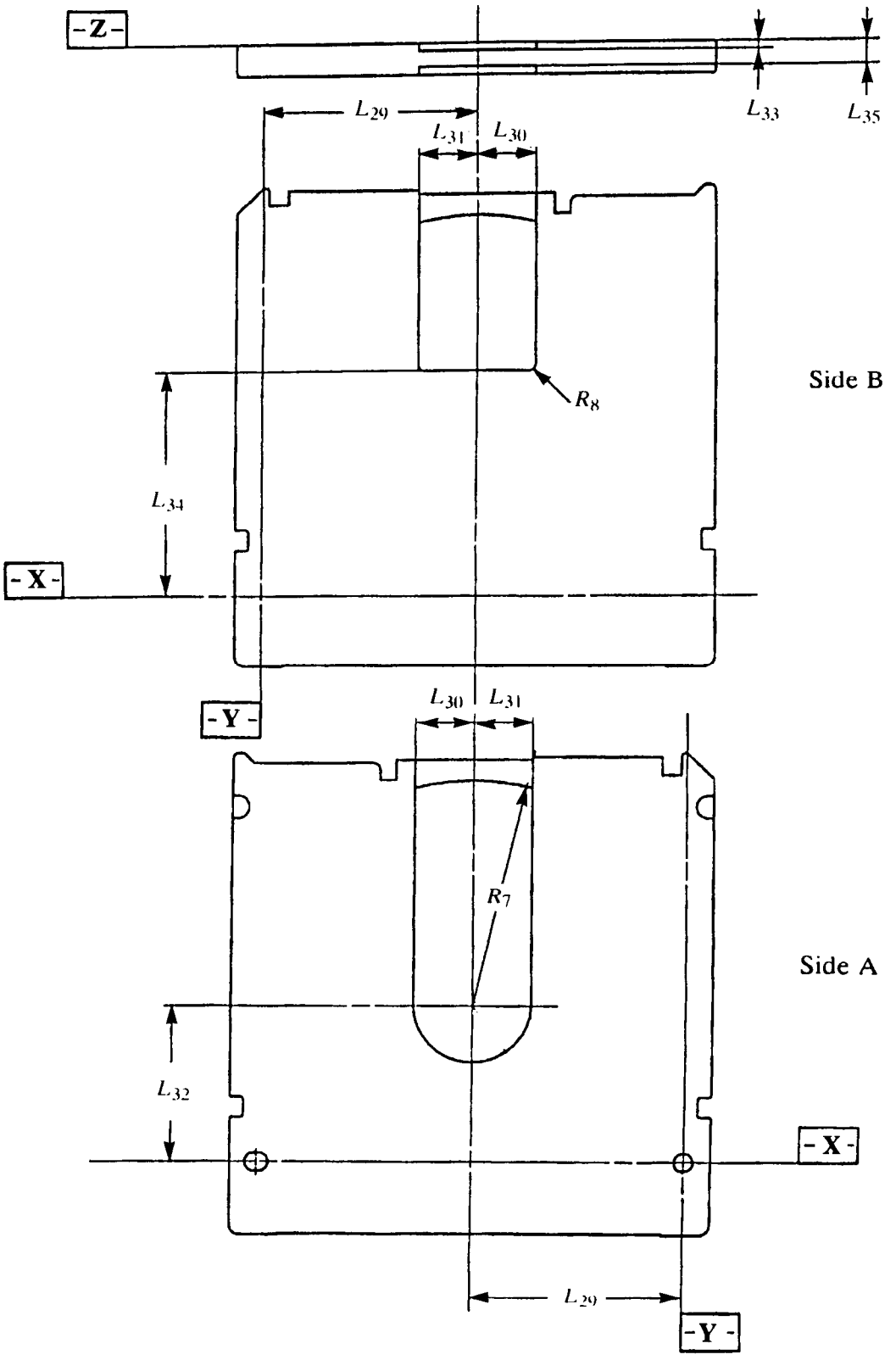

Figure 7 - Spindle and head windows on Side A (bottom) and B (top) of the case without shutter

Copyright International Organization for Standardization
Provided by IHS under license with ISO
No reproduction or networking permitted without license from IHS
Not for Resale

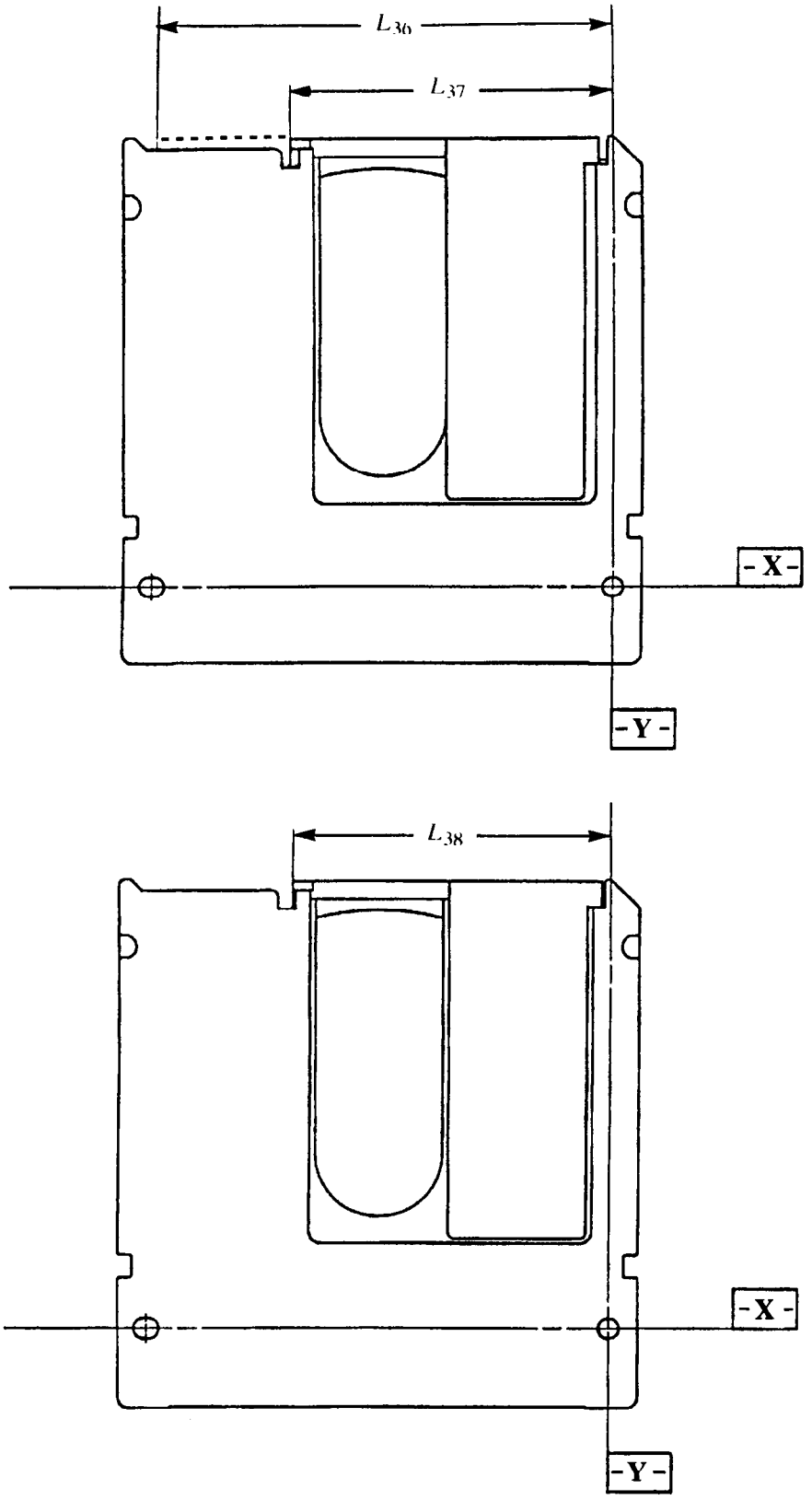

Figure 8 - Shutter in just open position (top) and maximum open position (bottom). The dashed line indicates the position of the shutter edge when the shutter is closed.

Copyright International Organization for Standardization
Provided by IHS under license with ISO
No reproduction or networking permitted without license from IHS
Not for Resale

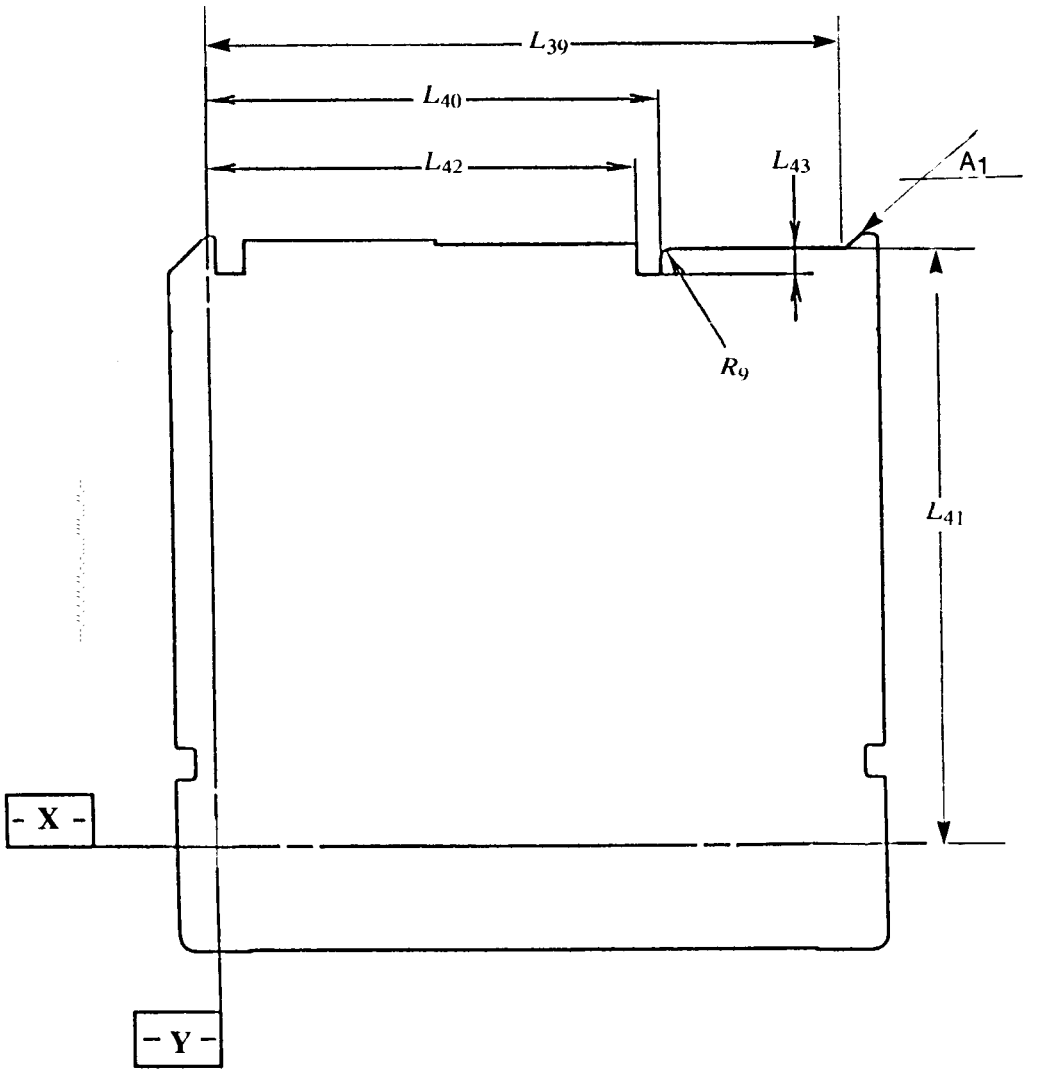

Figure 9 - Path for the shutter opener, seen from Side B without shutter

Copyright International Organization for Standardization
Provided by IHS under license with ISO
No reproduction or networking permitted without license from IHS
Not for Resale

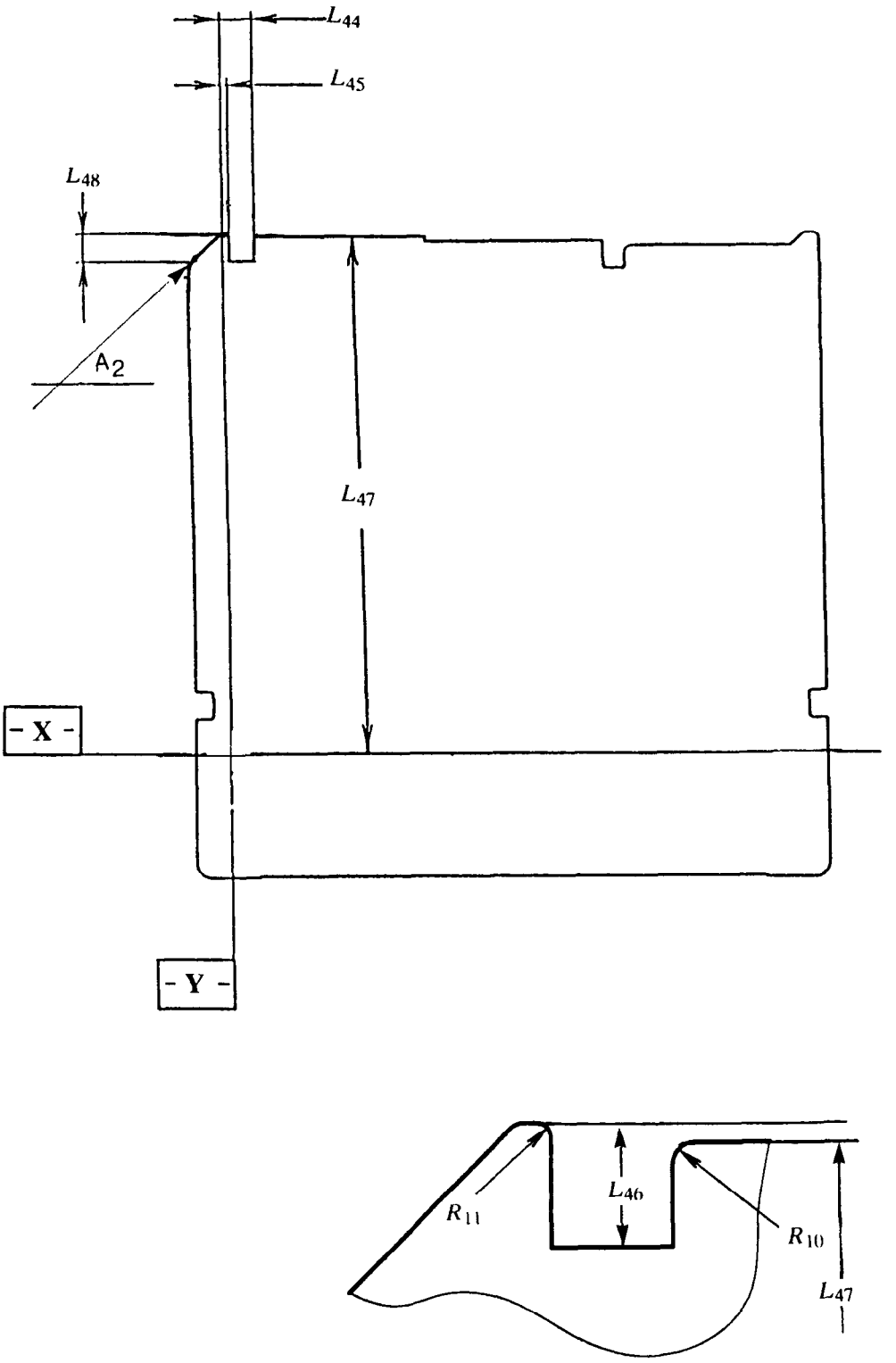

Figure 10 - Mis-insert protections, seen from Side B of the case without shutter

Copyright International Organization for Standardization
Provided by IHS under license with ISO
No reproduction or networking permitted without license from IHS
Not for Resale

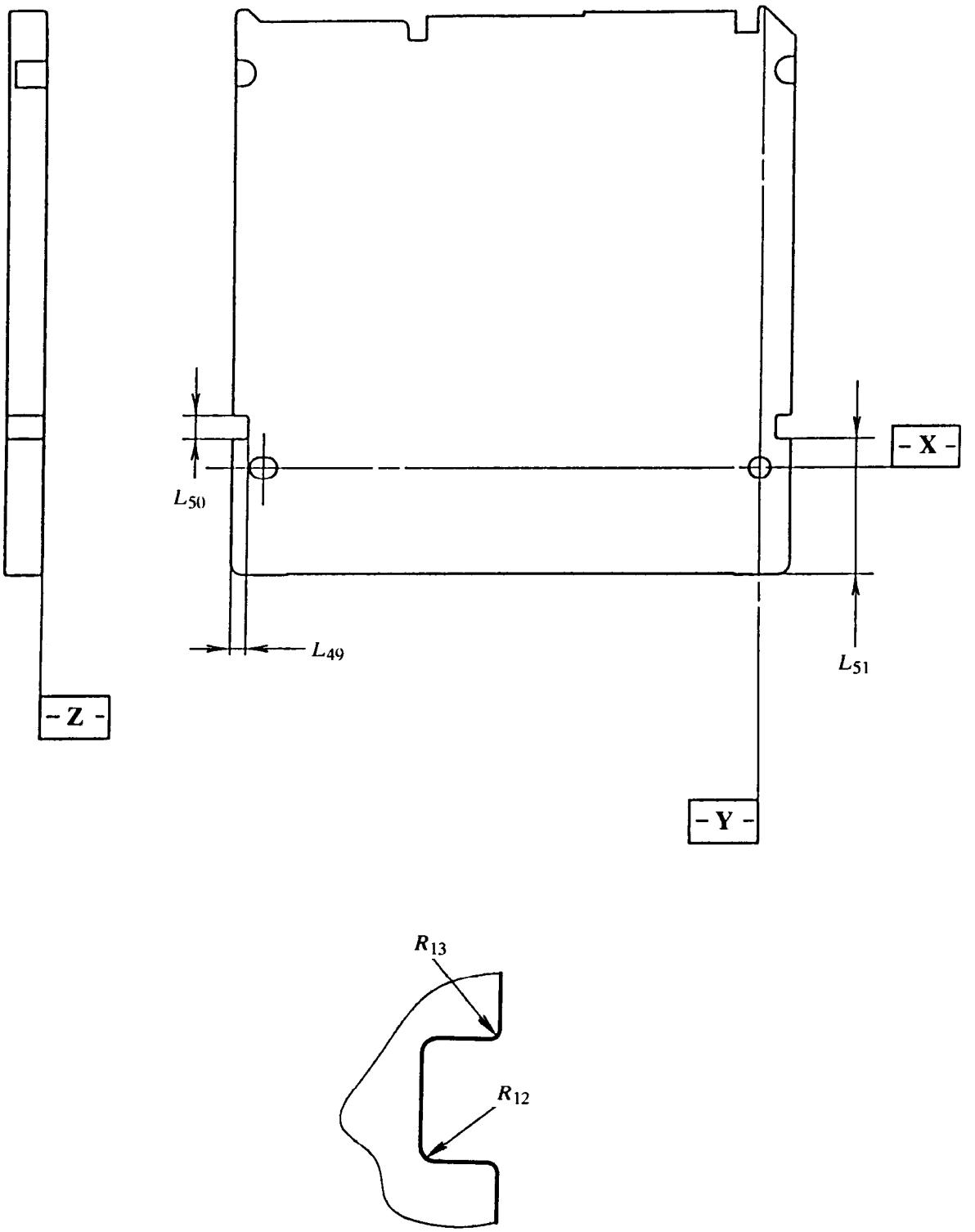

Figure 11 - Gripper slots seen from Side B of the case without shutter

Copyright International Organization for Standardization
Provided by IHS under license with ISO
No reproduction or networking permitted without license from IHS
Not for Resale

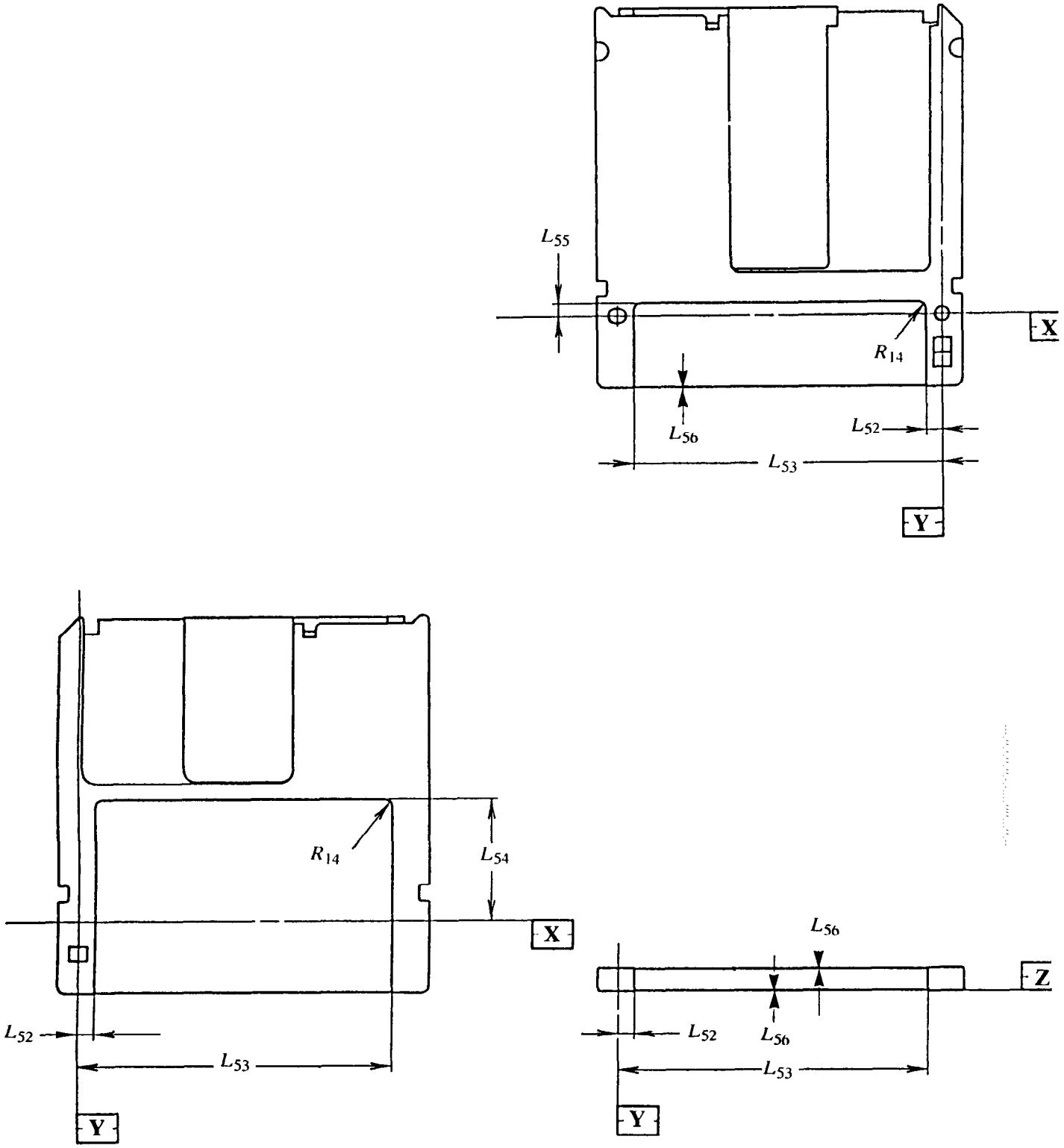

Figure 12 - Label area

Copyright International Organization for Standardization
Provided by IHS under license with ISO
No reproduction or networking permitted without license from IHS
Not for Resale

11 Dimensional, mechanical and physical characteristics of the disk

11.1 General description of the disk

The disk shall consist of a circular substrate with a hub on one side and a recording layer coated on the other side. The recording layer can be protected from environmental influences by a protective layer. The Information Zone of the substrate is transparent to allow an optical beam to focus on the recording layer through the substrate. The circular hub is in the centre of the disk on the side opposite to the recording layer. The hub interacts with the spindle of the drive, and provides the radial centring of the disk and the clamping force.

11.2 Reference axis and plane of the disk

Some dimensions of the hub are referred to a disk reference plane P. The disk reference plane P is defined by the perfectly flat annular surface of an ideal spindle onto which the clamping zone of the disk is clamped, and which is normal to the axis of rotation of this spindle. This axis A passes through the centre of the centre hole of the hub, and is normal to plane P.

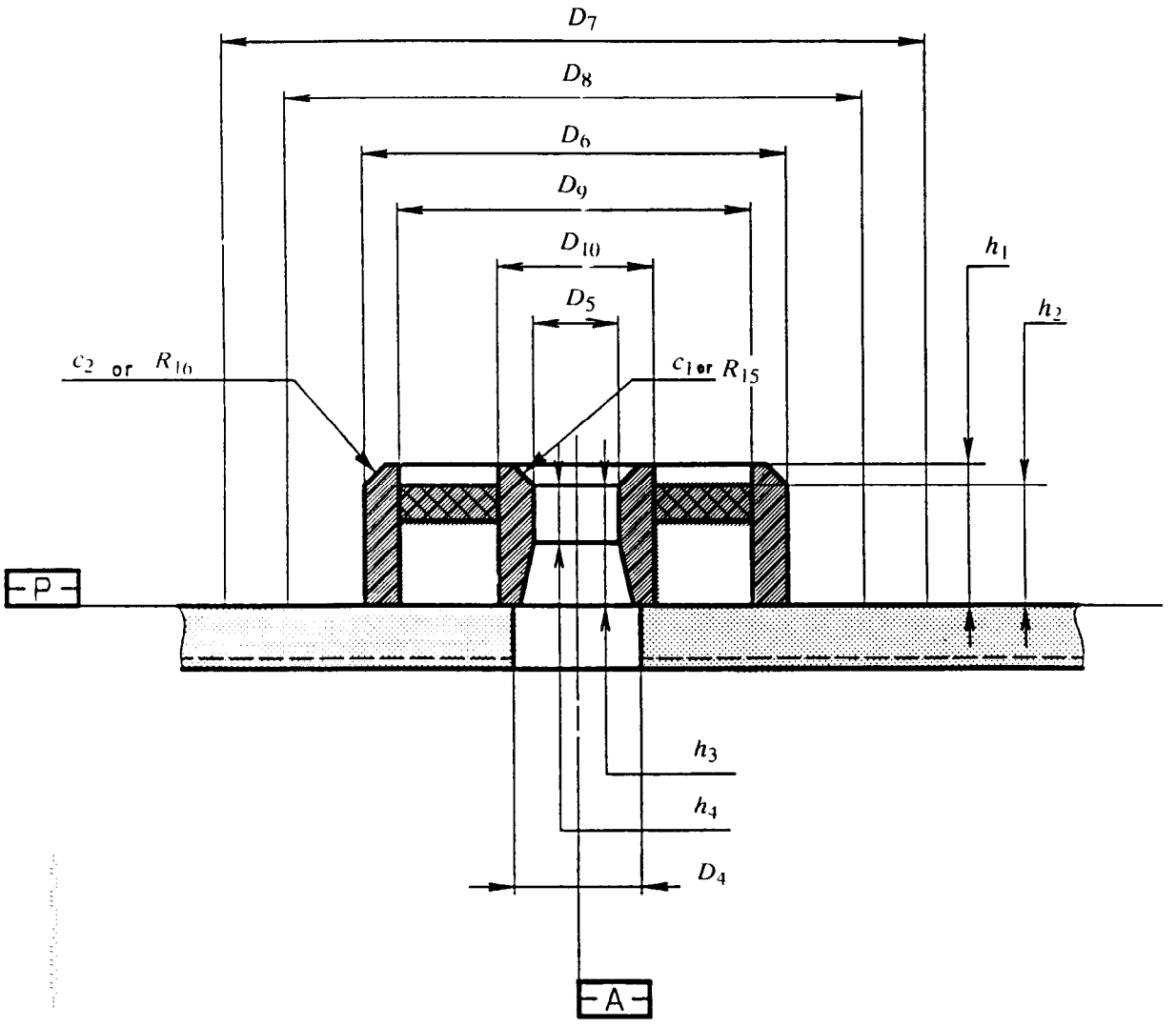

Figure 13 - Hub dimensions and clamping zone

Copyright International Organization for Standardization
Provided by IHS under license with ISO
No reproduction or networking permitted without license from IHS
Not for Resale

11.3 Dimensions of the disk (see figure 13)

The dimensions of the disk shall be measured in the test environment. The dimensions of the disk in an operating environment can be estimated from the dimensions specified in this clause. The outer diameter of the disk shall be

$$86{,}0 \text{ mm} \quad {}^{+\,0{,}0 \text{ mm}}_{-\,0{,}5 \text{ mm}}$$

Excluding axial deflection (see 11.4.5), the total thickness of the disk without the hub shall not exceed 1,4 mm.

The diameter of the centre hole of the disk without the hub shall be

$$D_4 = 6{,}0 \text{ mm min.}$$

11.3.1 Hub dimensions (see figure 13)

The diameter of the centre hole of the hub shall be

$$D_5 = 4{,}004 \text{ mm} \quad {}^{+\,0{,}012 \text{ mm}}_{-\,0{,}000 \text{ mm}}$$

The outer diameter of the hub shall be

$$D_6 = 15{,}0 \text{ mm} \quad {}^{+\,0{,}0 \text{ mm}}_{-\,0{,}2 \text{ mm}}$$

The height of the hub shall be

$$h_1 = 1{,}2 \text{ mm} \quad {}^{+\,0{,}0 \text{ mm}}_{-\,0{,}2 \text{ mm}}$$

The position of the top of the magnetizable surface shall be

$$h_2 = 1{,}20 \text{ mm} \quad {}^{+\,0{,}00 \text{ mm}}_{-\,0{,}15 \text{ mm}}$$

The height of the centring hole above reference plane P shall be

$$h_3 = 0{,}8 \text{ mm min.}$$

The centring length at a diameter D_5 shall be

$$h_4 = 0{,}15 \text{ mm min.}$$

The lead-in edge of the centre hole shall have chamfer c_1 of 45° by 0,2 mm ± 0,1 mm or shall be rounded off by radius

$$R_{15} = 0{,}2 \text{ mm} \pm 0{,}1 \text{ mm}$$

The outer edge of the centre hole shall have a chamfer c_2 of 45° by 0,4 mm ± 0,1 mm or shall be rounded off by radius

$$R_{16} = 0{,}4 \text{ mm} \pm 0{,}1 \text{ mm}$$

The hub shall have any suitable magnetizable material for clamping the disk. Its dimensions shall be

$$D_9 = 13{,}0 \text{ mm min.}$$

$$D_{10} = 6{,}0 \text{ mm max.}$$

and its adsorbent force measured by the test device specified in annex K shall be in the range of 3,0 N to 4,5 N.

11.3.2 Clamping zone (see figure 13)

The outer diameter of the clamping zone shall be

$$D_7 = 21{,}0 \text{ mm min.}$$

Copyright International Organization for Standardization
Provided by IHS under license with ISO
No reproduction or networking permitted without license from IHS
Not for Resale

The inner diameter of the clamping zone shall be

D_8 = 16,0 mm max.

11.4 Mechanical characteristics

All requirements in this clause shall be met in the operating environment.

11.4.1 Material

The disk shall be made from any suitable materials such that it meets the requirements of this International Standard. The only material properties specified by this International Standard are the magnetic properties of the magnetizable zone in the hub (see 11.3.1) and the optical properties of the substrate in the Information Zone (see 11.5).

11.4.2 Mass

The mass of the disk shall not exceed 24,0 g.

11.4.3 Moment of inertia

The moment of inertia of the disk relative to axis A shall not exceed 0,020 g·m^2.

11.4.4 Imbalance

The imbalance of the disk relative to axis A shall not exceed 0,006 g·m.

11.4.5 Axial deflection

The axial deflection of the disk is measured as the axial deviation of the recording layer. Thus it comprises the tolerances on the thickness of the substrate, on its index of refraction and the deviation of the entrance surface from plane P. The nominal position of the recording layer with respect to reference plane P is determined by the nominal thickness of the substrate.

The deflection of any point of the recording layer in the Information Zone from its nominal position, in a direction normal to plane P, shall not exceed ± 0,22 mm for rotational frequencies of the disk up to 30 Hz.

11.4.6 Axial acceleration

The maximum allowed tracking error e_{max} (see annex C) shall not exceed ± 1,0 µm, measured using the Reference Servo for axial tracking of the recording layer. The rotational frequency of the disk shall be 30,0 Hz ± 0,3 Hz. The stationary part of the motor is assumed to be motionless (no external disturbances). The measurement shall be made using a servo with the transfer function

$$H_s(i\omega) = \frac{1}{3} \times \left(\frac{\omega_0}{i\omega}\right)^2 \times \frac{1 + \frac{3i\omega}{\omega_0}}{1 + \frac{i\omega}{3\omega_0}}$$

where
$\omega = 2\pi f$
$\omega_0 / 2\pi$ = 870 Hz
$i = \sqrt{-1}$

or any other servo with $|1+H|$ within 20% of $|1+H_s|$ in the bandwidth of 30 Hz to 100 kHz. Thus, the disk shall not require an axial acceleration of more than 10 m/s^2 at low frequencies from the servo motor of the Reference Servo.

Copyright International Organization for Standardization
Provided by IHS under license with ISO
No reproduction or networking permitted without license from IHS
Not for Resale

11.4.7 Radial runout

The radial runout of the tracks in the recording layer in the Information Zone is measured as seen by the optical head of the Reference Drive. Thus it includes the distance between the axis of rotation of the spindle and reference axis A, the tolerances on the dimensions between axis A and the location of the track, and effects of non-uniformities in the index of refraction.

The runout, defined as the difference between the maximum and minimum distance of the centre of any track from the axis of rotation, measured along a fixed radial line over one revolution of the disk, shall not exceed 50 µm at a rotational frequency of the disk of 30,0 Hz ± 0,3 Hz.

11.4.8 Radial acceleration

The maximum allowed tracking error e_{max} (see annex C) shall not exceed ± 0,15 µm, measured using the Reference Servo for radial tracking of the tracks. The rotational frequency of the disk shall be 30,0 Hz ± 0,3 Hz. The stationary part of the motor is assumed to be motionless (no external disturbances). The measurement shall be made using a servo with the transfer function

$$H_s(i\,\omega) = \frac{1}{3} \times \left(\frac{\omega_0}{i\,\omega}\right)^2 \times \frac{1+\frac{3i\omega}{\omega_0}}{1+\frac{i\,\omega}{3\omega_0}}$$

where
$\omega = 2\pi f$
$\omega_0 / 2\pi = 1\,230$ Hz
$i = \sqrt{-1}$

or any other servo with $|1+H|$ within 20% of $|1+H_s|$ in the bandwidth of 30 Hz to 100 kHz. Thus, the disk shall not require a radial acceleration of more than 3 m/s^2 at low frequencies from the servo motor of the Reference Servo.

11.4.9 Tilt

The tilt is the angle which the normal to the entrance surface, averaged over an area of 1 mm in diameter, makes with the normal to plane P. It shall not exceed 5 mrad in the Information Zone.

11.5 Optical characteristics

11.5.1 Index of refraction

The index of refraction of the substrate in the Information Zone shall be within the range from 1,46 to 1,60.

11.5.2 Thickness of the substrate

The thickness of the substrate, from the entrance surface to the recording layer, in the Information Zone shall be

$$0{,}509 \times \frac{n^3}{n^2-1} \times \frac{n^2+0{,}265}{n^2+0{,}593}\ \text{mm} \pm 0{,}050\ \text{mm}$$

where n is the index of refraction.

Copyright International Organization for Standardization
Provided by IHS under license with ISO
No reproduction or networking permitted without license from IHS
Not for Resale

11.5.3 Birefringence

The effect of the birefringence of the substrate is included in the measurement of the imbalance of the signals in Channel 2 of the Reference Drive (see 25.2).

11.5.4 Reflectance

The double-pass optical transmission of the substrate and the reflectance of the recording layer are measured together as the reflectance R of the disk.

The value of R at the standard wavelength specified in 9.2 shall lie within the range from 0,14 to 0,29 for partially embossed or fully rewritable disks and for low reflectance fully embossed disks. The value of R shall be not less than 0,50 for high reflectance fully embossed disks (see annex R).

The nominal value of R shall be specified in bytes 3 and 19 of the Control Data (see annex F).

The actual value Rm shall be measured with the focussed beam and wavelength of the Reference Drive. It shall be measured in unrecorded, ungrooved areas, e.g. an ungrooved part of the Initial Zone (see 17.2.1) or the ODF of a sector (see 15.7).

The value R_m shall not diverge from R by more than 0,12 R, whilst remaining within the appropriate range specified above for R (see annex R).

12 Interface between cartridge and drive

12.1 Clamping method

When the cartridge is inserted into the drive, the shutter of the case is opened and the drive spindle engages the disk. The disk is held against the spindle by an axial clamping force, provided by the magnetizable material in the hub (see annex K) and the magnets in the spindle. The radial positioning of the disk is provided by the centring of the axis of the spindle in the centre hole of the hub. A cup-shaped turntable of the spindle shall support the disk in its clamping zone, determining the axial position of the disk in the case.

12.2 Clamping force

The clamping force exerted by the spindle on the hub shall not exceed 5 N.

12.3 Capture cylinder (see figure 14)

The capture cylinder is defined as the volume in which the spindle can expect the centre of the hole in the hub to be, just prior to capture, and with the cartridge constrained as in 10.4.4. The centre of the hole is defined as the point on axis A at a distance h_1 below plane P (see 11.3.1 and figure 13).

The size of the cylinder defines the permissible play of the disk inside its cavity in the case. The cylinder is referred to perfectly located and perfectly sized alignment and location pins in the drive; it includes the tolerances of those dimensions of the case and the disk which are between the two pins mentioned and the centre of the hub.

The bottom of the cylinder is parallel to plane Z, and shall be located a distance

$$L_{57} = 0{,}7 \text{ mm min.}$$

above plane Z. The top of the cylinder is located a distance

$$L_{58} = 2{,}3 \text{ mm max.}$$

above plane Z. The radius of the cylinder shall be

$$R_{17} = 1{,}4 \text{ mm max.}$$

Copyright International Organization for Standardization
Provided by IHS under license with ISO
No reproduction or networking permitted without license from IHS
Not for Resale

and its centre shall be given by the nominal values of L_{29} and L_{32} in the drive.

12.4 Disk position in operating condition (see figure 14)

When the disk is in the operating condition within the drive, the position of plane P of the disk shall be

$$L_{59} = 2{,}4 \text{ mm} \pm 0{,}1 \text{ mm}$$

above plane Z of the case, and the axis of rotation shall be within a circle with a radius

$$R_{18} = 0{,}1 \text{ mm max.}$$

and a centre given by the nominal values of L_{29} and L_{32}.

The torque to be exerted on the disk in the operating condition in order to maintain a rotational frequency of 30 Hz shall not exceed 0,01 N·m.

Copyright International Organization for Standardization
Provided by IHS under license with ISO
No reproduction or networking permitted without license from IHS
Not for Resale

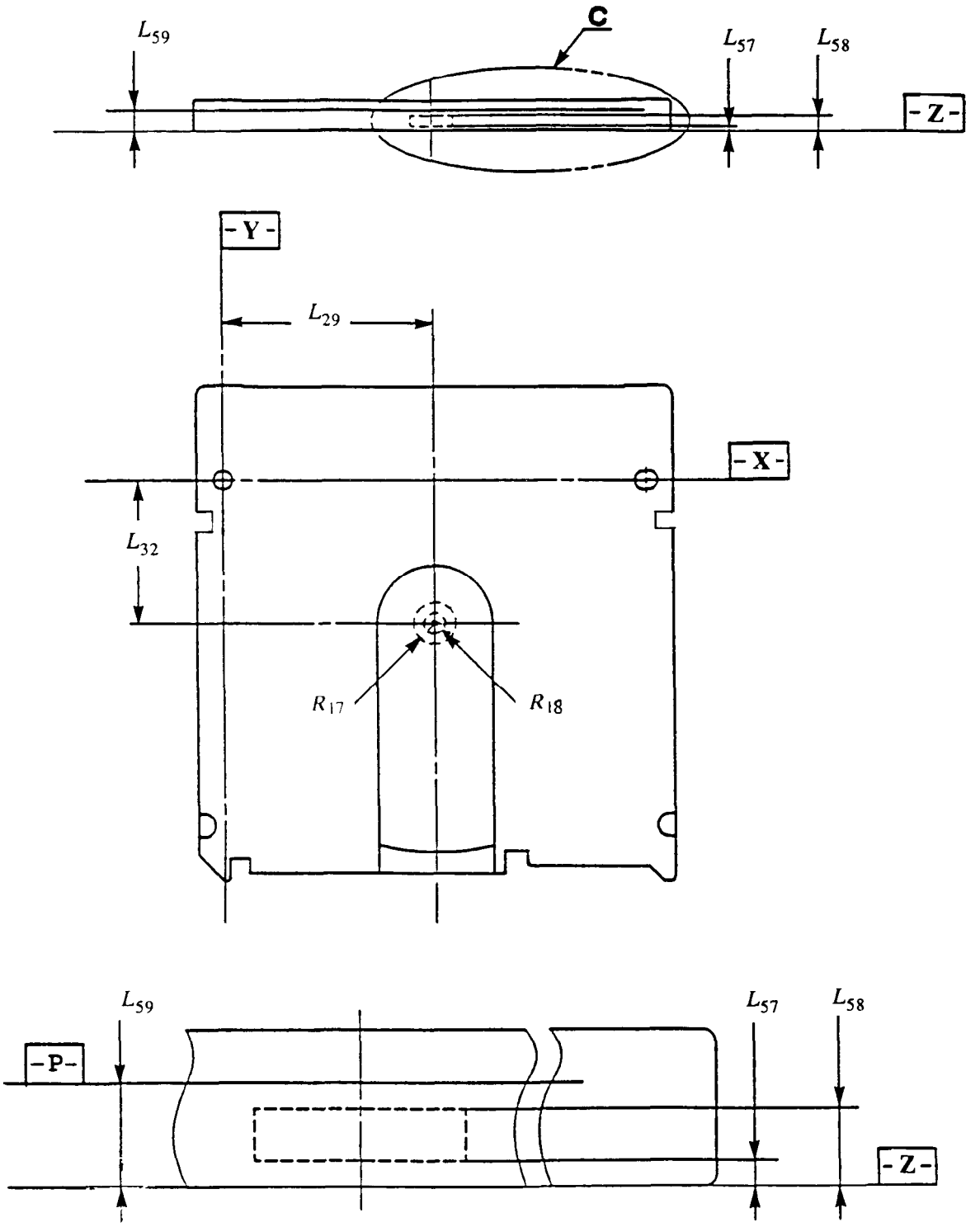

Detail C

Figure 14 - Capture cylinder and disk position in operating condition

Copyright International Organization for Standardization
Provided by IHS under license with ISO
No reproduction or networking permitted without license from IHS
Not for Resale

Section 3 - Format of information

13 Track geometry

13.1 Track shape

The Information Zone shall contain tracks intended for the Continuous Composite Servo tracking method (CCS).

A track consists of a groove-land-groove combination, where each groove is shared with a neighbouring track. A groove is a trench-like feature, the bottom of which is located nearer to the entrance surface than the land. The centre of the track, i.e. where the recording is made, is the centre of the land. The grooves shall be continuous, except for ODFs. The shape of the groove is determined by the requirements in clause 21.

Each track shall form a 360° turn of a continuous spiral.

13.2 Direction of rotation

The disk shall rotate counter-clockwise as viewed from the optical head. The tracks shall then spiral outward.

13.3 Track pitch

The Track Pitch is the distance between adjacent track centrelines, measured in a radial direction. It shall be 1,60 µm ± 0,10 µm.

The width of a band of 10 000 tracks shall be 16,00 mm ± 0,10 mm.

13.4 Track number

Each track shall be identified by a track number. Track 0 shall be the first track of the Data Zone. It shall be located at a radius of 24,00 mm ± 0,10 mm.

The track numbers of tracks located at radii larger than that of track 0 shall be increased by 1 for each track.

The track numbers of tracks located at radii smaller than that of track 0 shall be negative, and decrease by 1 for each track. Their value is given in the ID field in TWO's complement, thus track -1 is indicated by (FFFF).

14 Track format

14.1 Track layout

On each track there shall be 25 sectors. Each sector shall comprise 725 bytes. A byte is represented on the disk by 16 Channel bits. Hence, the length of one Channel bit is determined by the requirement that there are 25 x 725 x 16 = 290 000 Channel bits on a track.

The sectors shall be equally spaced over a track in such a way that the distance between the first Channel bit of a sector and the first Channel bit of the next sector shall be 11 600 Channel bits ± 3 Channel bits.

At the rotational frequency of 30 Hz, the period T of a Channel bit equals

$$\frac{10^9}{30 \times 290\,000}\text{ns} = 115\text{ ns}$$

Copyright International Organization for Standardization
Provided by IHS under license with ISO
No reproduction or networking permitted without license from IHS
Not for Resale

14.2 Radial alignment

The Headers of the sectors shall be radially aligned in such a way that the angular distance between the first Channel bit of sectors in adjacent tracks shall be less than ± 1 Channel bit.

14.3 Sector Number

The sectors on a track shall be numbered consecutively from 0 to 24. All sectors with the same Sector Number shall be radially aligned.

15 Sector format

15.1 Sector layout

A sector shall comprise a Header, an Offset Detection Field (ODF) and a Recording field in which 512 user data bytes can be recorded. The Header of each sector shall be embossed. The Recording field can be empty, user-written or embossed. The length of the sector shall be 725 bytes nominally. Tolerances allowed by 14.1 are taken up by the Buffer, i.e. the last field of the sector. The length of the Header field is 52 bytes, the length of the ODF is 1 byte and the length of the Recording field is 672 bytes.

The layout of a sector is shown in figure 15. The numbers indicate the length of a field in bytes.

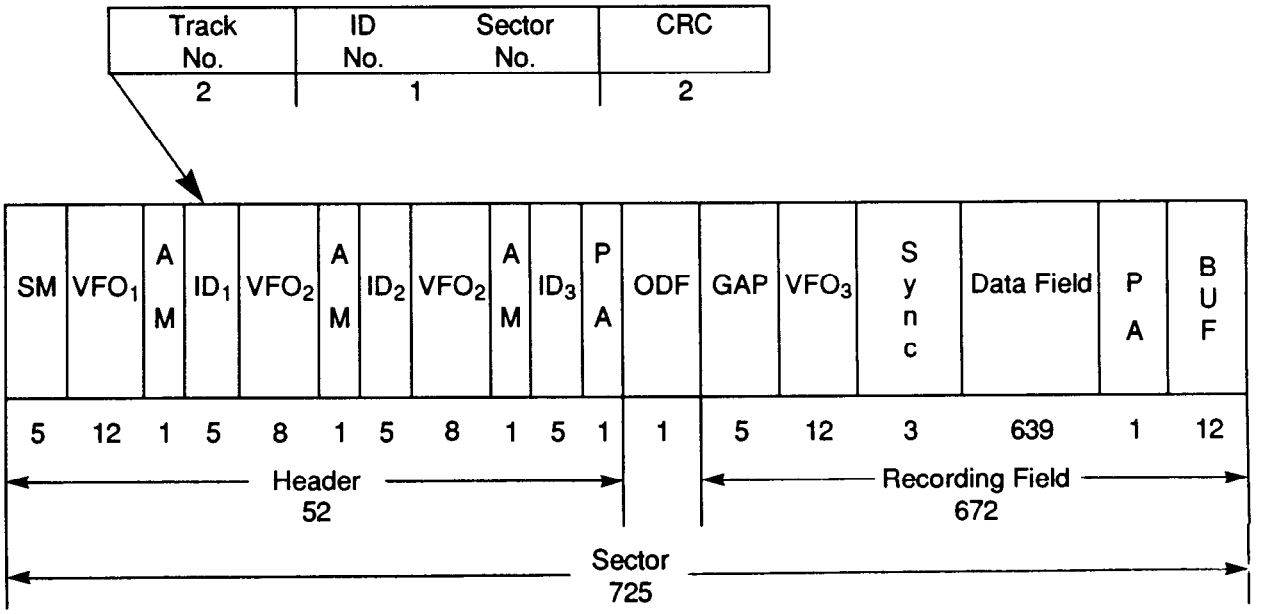

Figure 15 - Sector format

15.2 Sector Mark

The Sector Mark shall consist of an embossed pattern that does not occur in RLL (2,7) code (see 16), and is intended to enable the drive to identify the start of the sector without recourse to a phase-locked loop.

The Sector Mark shall have a length of 80 Channel bits and shall consist of embossed, continuous long marks of different length followed by a lead-in to the VFO_1 field. The timing pattern of the Sector Mark shall be as shown in figure 16, where T is the period of one Channel bit. The signal obtained from a mark is less than a signal obtained from no mark. The lead-in shall have the Channel bit pattern 0000010010.

Copyright International Organization for Standardization
Provided by IHS under license with ISO
No reproduction or networking permitted without license from IHS
Not for Resale

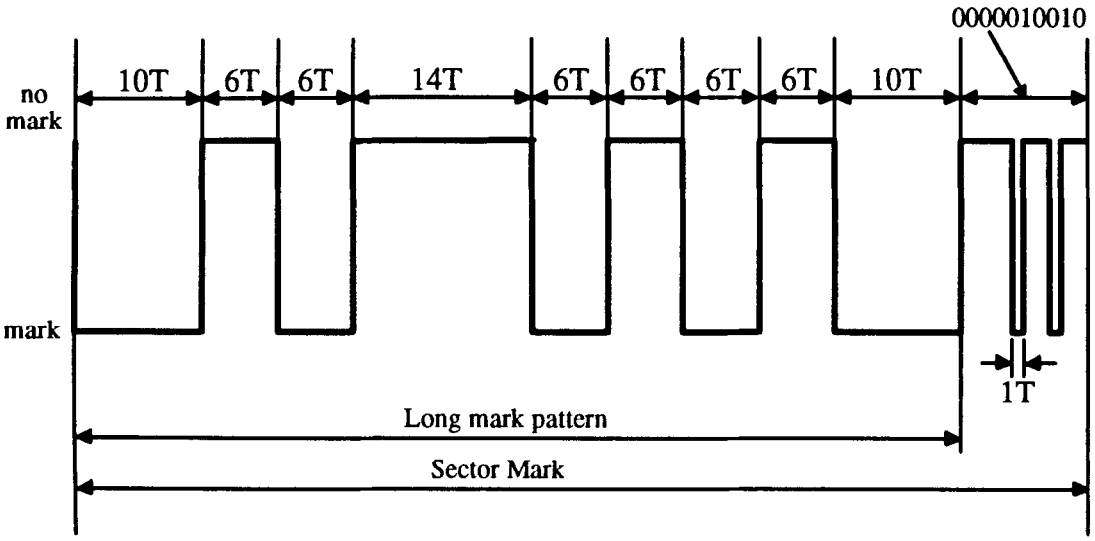

Figure 16 - Pattern of the Sector Mark

15.3 VFO fields

There shall one embossed VFO_1 field and two embossed VFO_2 fields in the Header and one VFO_3 field in the Recording field to give the voltage-frequency-oscillator of the phase-locked loop of the read channel Channel bit synchronization. The information in VFO_1 and VFO_3 shall be identical in pattern and have the same length of 192 Channel bits. VFO_2 shall have a length of 128 Channel bits. The start of VFO_2 depends on the contents of the preceding ID field because of the closure required for the RLL (2,7) recording code. Therefore, VFO_2 shall be the appropriate one of two patterns differing only in the first Channel bit.

The continuous Channel bit pattern for the VFO fields shall be

VFO_1, 192 Channel bits: 0100100100100....10010
VFO_2, 128 Channel bits: 100100100100....10010
VFO_2, 128 Channel bits: 000100100100....10010
VFO_3, 192 Channel bits: 0100100100100....10010.

15.4 Address Mark (AM)

The Address Mark shall consist of an embossed pattern that does not occur in RLL (2,7) code. The field is intended to give the drive byte synchronization for the following ID field. It shall have a length of 16 Channel bits with the following pattern:

0100 1000 0000 0100.

15.5 ID fields

The three ID fields shall each contain the address of the sector, i.e. the track number and the sector number of the sector, and CRC bytes. Each field shall consist of five bytes with the following embossed contents:

Copyright International Organization for Standardization
Provided by IHS under license with ISO
No reproduction or networking permitted without license from IHS
Not for Resale

1st and 2nd bytes	MSB, LSB of the track number
3rd byte	
bits 7 and 6	00 shall indicate the ID_1 field 01 shall indicate the ID_2 field 10 shall indicate the ID_3 field
bit 5	shall be set to ZERO
bits 4 to 0	sector number in binary notation
4th and 5th bytes	CRC field containing the CRC bits computed over the first three bytes according to annex D.

15.6 Postambles (PA)

The Postamble field shall be equal in length 16 Channel bits. There shall be a Postamble following ID_3 and a Postamble following the Data field. A Postamble allows closure of the last byte of the preceding CRC or Data field as required by the RLL (2,7) recording code (see 16). The Postamble is necessary to be able to start the following ODF or Buffer field in a predictable manner.

15.7 Offset Detection Field (ODF)

The ODF shall have a length of 16 Channel bits and contain neither grooves nor embossed data. It is intended to enable the drive to correct for offsets in the radial tracking.

15.8 Gap

The Gap shall be a field with a nominal length of 80 Channel bits. Its contents are not specified and shall be ignored on interchange, but shall not be embossed. It is the first field of the Recording field, and gives the drive some time for processing after it has finished reading the header and before it has to erase, write or read the VFO_3 field.

The length of the Gap has a tolerance of ± 8 Channel bits, i.e. the following VFO_3 field can start between 72 and 88 Channel bits after the ODF. Moreover, it need not start exactly on a Channel bit position as extrapolated from the header. The tolerance is subtracted from the length of the Buffer field, e.g. a Gap length of 85,3 Channel bits results in a reduction of the Buffer length by 5,3 Channel bits.

15.9 Sync

The Sync field is intended to allow the drive to obtain byte synchronization for the following Data field. It shall have a length of 48 Channel bits and be recorded with the Channel bit pattern

0100 0010 0100 0010 0010 0010 0100 0100 1000 0010 0100 1000

15.10 Data field

The Data field is intended for recording user data. It shall have a length of 639 bytes and shall comprise

512 bytes of user data
4 bytes the contents of which are not specified by this International Standard and shall be ignored in interchange
4 bytes of CRC
80 bytes of ECC and
39 bytes for resynchronization.

The disposition of these bytes in the Data field with their five-way interleave and the contents of the last three categories is specified in annex E.

--`,,```,,,,````-`-`,,`,,`,`,,`---

Copyright International Organization for Standardization
Provided by IHS under license with ISO
No reproduction or networking permitted without license from IHS
Not for Resale

15.10.1 User data bytes

The User data bytes are at the disposal of the user for recording information.

15.10.2 CRC and ECC bytes

The Cyclic Redundancy Check bytes and Error Correction Code bytes are used by the error detection and correction system to rectify erroneous data. The ECC is a Reed-Solomon code of degree 16. The bytes shall be as specified in annex E.

15.10.3 Resync bytes

The Resync bytes enable a drive to regain byte synchronization after a large defect in the Data field. Their content and location in the Data field shall be as specified in annex E.

15.11 Buffer field

The Buffer field shall have a length of 192 Channel bits ± 48 Channel bits and shall not contain any data. The tolerance is needed for four reasons. Firstly, the tolerance on the header-to-header distance as specified in 14.1. Secondly, the tolerance in the start of the VFO_3 field as specified in 15.8. Thirdly, the actual length of the written data, as determined by the runout of the track and the speed variations of the disk during writing of the data. Fourthly, to ensure that all data written previously, the length of which is subject to the above tolerances, has been erased.

16 Recording code

The 8-bit bytes in the three Address fields and in the Data field, except for the Resync bytes, shall be converted to Channel bits on the disk according to table 2. All other fields in a sector have already been defined in terms of Channel bits. Each ONE Channel bit shall be recorded as a mark produced by a write pulse of the appropriate power and width.

The recording code used to record all data in the Information Zone on the disk shall be the run-length limited code known as RLL (2,7).

Table 2 - Conversion of input bits to Channel-bits

Input bits	Channel-bits
10	0100
010	100100
0010	00100100
11	1000
011	001000
0011	00001000
000	000100

The coding shall start at the first bit of the first byte of the field to be converted. After a Resync field the RLL(2,7) coding shall start again with the first bit of the next byte of input data.

The RLL(2,7) coding can seldom be terminated at the end of the last input byte in a field, due to leftover bits which cannot be converted on their own. To achieve closure of the recording code, three pad bits are added at the end of the field before converting the data to Channel bits. Table 3 defines the closure for all possible combinations of leftover bits.

The ID_1 and ID_2 fields shall lead to one of the two patterns for the VFO_2 (table 3a).

The bytes in the Data field preceding a Resync field shall lead to the Resync pattern (table 3b).

Copyright International Organization for Standardization
Provided by IHS under license with ISO
No reproduction or networking permitted without license from IHS
Not for Resale

With the exception of providing a suitable closure pattern for the ID_3 field and the last byte in the Data field, the contents of the PA field following the ID_3 field and the last byte in the Data field, respectively, are not specified by this International Standard and shall be ignored in interchange.

Table 3a - Transition from the end of the ID_1 and ID_2 field to the VFO_2 field

Leftover input bits	Pad bits	Channel bits of closure pattern, leading to one of the two VFO_2 patterns	
none	010		100100100100100100.....10010
0	010	00	100100100100100100.....10010
1	010	01	000100100100100100.....10010
00	010	0001	000100100100100100.....10010
01	010	1001	000100100100100100.....10010
001	010	001001	000100100100100100.....10010
end of the ID field →		end of the ID field →	← VFO_2 field →

Table 3b - Transition from the byte in the Data field preceding a Resync to the Resync field

Leftover input bits	Pad bits	Channel bits of closure pattern, leading to the Resync pattern	
none	011		0010000000100100
0	011	00	0010000000100100
1	011	01	0010000000100100
00	011	0001	0010000000100100
01	011	1001	0010000000100100
001	011	001001	0010000000100100
end of the field →		end of the field →	← Resync →

17 Format of the Information Zone

17.1 General description of the Information Zone

The Information Zone shall contains all information on the disk relevant for data interchange. The information comprises embossed tracking provisions, embossed headers, embossed data and, possibly, user-written data. In this clause, the term 'data' is reserved for the content of the data field of a sector, which, in general, is transferred to the host. Clause 17 defines the layout of the information; the characteristics of signals obtained from this information are specified in section 4 and 6.

If a disk has no Rewritable Zone, 18.3 and 19 are not part of the conformance requirements. If a disk has no Embossed Zone, 18.4 is not part of the conformance requirements.

17.2 Division of the Information Zone

The Information Zone is divided in three parts: a Lead-in Zone, a Data Zone and a Lead-out Zone. The Data Zone is intended for recording user data. The Lead-in and Lead-out Zones contain control information for the drive and zones for performing tests by the manufacturer or drive.

Copyright International Organization for Standardization
Provided by IHS under license with ISO
No reproduction or networking permitted without license from IHS
Not for Resale

Table 4 - Layout of the Information Zone; the radii of a zone in the table are the nominal values of the radius of the centre of the first track and of the radius of the centre of the last track of the zone

	Track number		Radius (mm)	
	from	to	from	to
Lead-in Zone				
Initial Zone	--	--	22,60	22,90
Acquire Zone				
Lead-in tracks	-688	-297	22,90	23,53
Focus tracks	-296	-293		
Inner Test Zone				
for manufacturer	-292	-155	23,53	23,75
for drives	-154	-17	23,75	23,97
Inner Control Zone	-16	-1	23,97	24,00
Data Zone	0	9999	24,00	40,00
Lead-out Zone				
Outer Control Zone	10000	10015	40,00	40,02
Outer Test Zone				
for drives	10016	10153	40,02	40,24
for manufacturer	10154	10291	40,24	40,46
Buffer Zone	10292	10624	40,46	41,00

The division of the Information Zone shall be as given in table 4. The tolerance on the inner radius of the Data Zone is specified in 13.4; the tolerance on other radii is determined by the tolerance on the track pitch as specified in 13.3.

17.2.1 Initial Zone

The Initial Zone is intended to enable a drive to lock its axial tracking (focussing) servo. It shall have either a flat reflective layer, or such a layer with uninterrupted grooves over complete tracks as specified in clauses 20 and 21, or such tracks with embossed Headers and ODFs, or any combination of the above.

17.2.2 Acquire Zone

The Acquire Zone shall consist of two parts, each containing embossed grooves, Headers and ODFs. The first part shall be a band of Lead-in tracks with no data in the Recording fields of the sectors.

The second part shall be a band of Focus tracks with a repeated Channel bit pattern 100100... embossed in the VFO_3, SYNC and the 639 bytes of the Data fields of the Recording field of each sector. These tracks are intended to enable a drive to remove focus offsets by maximizing the read signal from the Channel bit pattern.

17.2.3 Test Zones

There shall be an Inner Test Zone and an Outer Test Zone. The Test Zones are areas with embossed grooves, Headers, ODFs, and Recording fields.

The Test Zone for drives is intended for tests to enable a drive to set its write power, and shall not have embossed data in the Recording field of the sector in the case of fully rewritable or partially embossed disks. The tracks used for testing should be chosen from the Zone in a random way, so as to ensure a gradual degradation of the entire Zone due to use. Then each track in this Zone will remain representative for the characteristics of tracks in the Data Zone of the disk.

The Test Zone for the manufacturer is intended for quality tests by the media manufacturer. The Test Zone for drives shall not be used for such tests, as they can cause serious degradation of the Zone.

Copyright International Organization for Standardization
Provided by IHS under license with ISO
No reproduction or networking permitted without license from IHS
Not for Resale

17.2.4 Control Zones

There shall be an Inner Control Zone and an Outer Control Zone. Each Control Zone shall contain 15 tracks with embossed grooves and sectors formatted according to clause 15 and one track, called Buffer Track with an embossed groove and Headers according to clause 15. In the Inner Control Zone track-1 is the Buffer Track, in the Outer Control Zone track 10 000 is the Buffer Track. The Data fields of all sectors in the two Control Zones, except in the Buffer Tracks, shall be identical, and contain embossed Control data for the drive. The Control data in a Data field is specified in annex F.

The Recording fields of all sectors of the two Buffer Tracks shall not contain embossed data for fully rewritable and partially embossed disks. For fully embossed disks the user data bytes in the Data field of the Recording field in the sectors in the Buffer Tracks shall be set to (FF).

17.2.5 Data Zone

The Data Zone shall contain embossed grooves, Headers and ODFs. The Recording fields can be user-written or contain embossed data, in the format of 15. A Data Zone can contain one contiguous area with embossed Data fields as specified in 18.4. The layout of the Data Zone is specified in clause 18.

17.2.6 Buffer Zone

The Buffer Zone shall contain embossed grooves, Headers and ODFs.

18 Format of the Data Zone

The Data Zone shall contain four Defect Management Areas (DMAs), two at the beginning of the zone and two at the end. The area between the two sets of DMAs may contain a Rewritable Zone or an Embossed Zone or both. The layout of the Data Zone, the Buffer Tracks and the Control Zones is shown in table 5, where the tracks marked R/W are rewritable.

The Rewritable and Embossed Zones are subdivided into groups as shown in table 6.

Copyright International Organization for Standardization
Provided by IHS under license with ISO
No reproduction or networking permitted without license from IHS
Not for Resale

Table 5 - Layout of the Data Zone, the Control Zones and the Buffer Tracks

Track	Fully Rewritable	Partially Embossed	Fully Embossed
-16 -2	Inner Control Zone	Inner Control Zone	Inner Control Zone
-1	Buffer Track	Buffer Track	Buffer Track
0	DMA1 (R/W) ▲	DMA1 (R/W) ▲	DMA1 ▲
2	DMA2 (R/W)	DMA2 (R/W)	DMA2
3	Rewritable Zone (R/W)	Rewritable Zone (R/W)	Embossed Zone
9996		Embossed Zone	
9997	DMA3 (R/W) ▲	DMA3 (R/W) ▲	DMA3 ▲
9999	DMA4 (R/W)	DMA4 (R/W)	DMA4
10000	Buffer Track	Buffer Track	Buffer Track
10001 10015	Outer Control Zone	Outer Control Zone	Outer Control Zone

▲ see 18.1.

Table 6 - Partitioning of the Rewritable and Embossed Zones

Rewritable Zone	Embossed Zone
Group 1 R/W Data Sectors	Group 1 Embossed Data Sectors
Group 1 R/W Spare Sectors	Group 1 Embossed Parity Sectors
Group 2 R/W Data Sectors	Group 2 Embossed Data Sectors
. . .	. . .
Group g_1 R/W Data Sectors	Group g_2 Embossed Data Sectors
Group g_1 R/W Spare Sectors	Group g_2 Embossed Parity Sectors
Remaining R/W Sectors	Remaining Embossed Sectors

18.1 Defect Management Areas (DMAs)

The four Defect Management Areas contain information on the structure of the Data Zone and on the defect management. The length of each DMA shall be 36 sectors. Two of the DMAs, DMA1 and DMA2, are located near the inner diameter of

Copyright International Organization for Standardization
Provided by IHS under license with ISO
No reproduction or networking permitted without license from IHS
Not for Resale

the disk; two others, DMA3 and DMA4, shall be located near the outer diameter of the disk. The boundaries of the DMAs are indicated in table 7.

Table 7 - Locations of the DMAs

	Beginning		Ending		Length
	Track No.	Sector No.	Track No.	Sector No.	
DMA1	0	0	1	10	36
▲	1	11	1	13	3
DMA2	1	14	2	24	36
DMA3	9997	0	9998	10	36
▲	9998	11	9998	13	3
DMA4	9998	14	9999	24	36

The contents of the groups of 3 sectors indicated by ▲ in tables 5 and 7 are not specified by this International Standard, and shall be ignored in interchange.

Each DMA shall contain a Disk Definition Sector (DDS) and may contain a Primary Defect List (PDL) or a Secondary Defect List (SDL) or both. The contents of the four PDLs, when recorded, shall be identical and the contents of the four SDLs, when recorded, shall be identical. The only differences between the contents of the four DDSs shall be the pointers to each associated PDL and SDL.

After initialization of the disk, each DMA shall have the following content:

- The first sector shall contain the DDS.
- The second DMA Sector shall be the first sector of the PDL, if the PDL is recorded.

The SDL shall be located immediately after the PDL if the PDL is recorded, or shall begin in the second DMA sector if the PDL is not recorded. The lengths of the PDL and SDL are determined by the number of entries in each.

The presence of the components of the DMA is specified in table 8.

Table 8 - Requirements for the DDS, PDL and SDL

Component	Fully Rewritable	Partially Embossed	Fully Embossed
DDS	R/W, Required	R/W, Required	Embossed, Required
PDL	R/W, Optional	R/W, Optional	Not present
SDL	R/W, Required	R/W, Required	Not present

The content of the DMA sectors following the SDL is not specified for fully rewritable and partially embossed disks and shall be ignored in interchange. The bytes of the Data fields of the DMA Sectors following the DDS for fully embossed disks shall be set to (FF).

The contents of the DDS are specified in 18.2; those of the PDL and SDL are specified in clause 19.

18.2 Disk Definition Sector (DDS)

The DDS shall consist of a table with a length of one sector. It specifies the method of initialization of the disk, the division of the Rewritable and Embossed Zones into groups, and the start addresses of the PDL and SDL. The DDS shall be recorded in the first sector of each DMA at the end of initialization of the disk. On a fully embossed disk the DDS shall be embossed.

Copyright International Organization for Standardization
Provided by IHS under license with ISO
No reproduction or networking permitted without license from IHS
Not for Resale

Note 3 - For partially embossed disks, possible values for the DDS parameters are specified by the manufacturer and recorded in the Control Zones; it is not required that parameter values associated with the Rewritable Zone be duplicated when the DDSs are recorded in the Data Zone during disk initialization.

The following information on the disk structure shall be recorded in each of the four DDSs.

Table 9 - Content of the DDS

Byte	DDS Content	Mandatory settings		
		Fully Rewritable	Partially Embossed	Fully Embossed
0	DDS Identifier	(0A)	(0A)	(0A)
1	DDS Identifier	(0A)	(0A)	(0A)
2	Reserved	(00)	(00)	(00)
3	Fully Embossed	n.a.	n.a.	(00)
	Disk Certified	(01)	(01)	n.a.
	Disk Not Certified	(02)	(02)	n.a.
4	Number g_1 of R/W Groups MSB	-	-	(00)
5	Number g_1 of R/W Groups LSB	-	-	(00)
6	Number n_1 of R/W Data Sectors per Group MSB	-	-	(00)
7	Number n_1 of R/W Data Sectors per Group	-	-	(00)
8	Number n_1 of R/W Data Sectors per Group LSB	-	-	(00)
9	Number m_1 of R/W Spare Sectors per Group MSB	-	-	(00)
10	Number m_1 of R/W Spare Sectors per Group	-	-	(00)
11	Number m_1 of R/W Spare Sectors per Group LSB	-	-	(00)
12	Number g_2 of Embossed Groups MSB	(00)	-	-
13	Number g_2 of Embossed Groups LSB	(00)	-	-
14	Number n_2 of Embossed Data Sectors per Group MSB	(00)	-	-
15	Number n_2 of Embossed Data Sectors per Group	(00)	-	-
16	Number n_2 of Embossed Data Sectors per Group LSB	(00)	-	-
17	Number m_2 of Embossed Parity Sectors per Group MSB	(00)	-	-
18	Number m_2 of Embossed Parity Sectors per Group	(00)	-	-
19	Number m_2 of Embossed Parity Sectors per Group LSB	(00)	-	-
20	Number of Tracks per Parity Sector	(00)	(01)	(01)
21	Start of PDL, Track MSB	-	-	(FF)
22	Start of PDL, Track	-	-	(FF)
23	Start of PDL, Track LSB	-	-	(FF)
24	Start of PDL, Sector	-	-	(FF)
25	Start of SDL, Track MSB	-	-	(FF)
26	Start of SDL, Track	-	-	(FF)
27	Start of SDL, Track LSB	-	-	(FF)
28	Start of SDL, Sector	-	-	(FF)
29-511		(00)	(00)	(00)

In table 9 the symbol hyphen (-) means that the appropriate value is to be entered in the DDS, and "n.a." means "not applicable".

If a PDL is not recorded, DDS bytes 21 to 24 shall be set to (FF).

Fully rewritable ODCs, already in use at the date of publication of this International Standard, which meet all requirements of this International Standard except the prescribed value for Byte 20 of the DDS, shall be considered as being in conformance with this International Standard.

Copyright International Organization for Standardization
Provided by IHS under license with ISO
No reproduction or networking permitted without license from IHS
Not for Resale

The restrictions on DDS parameters are specified in table 10.

Table 10 - DDS Parameter Restrictions

Fully Rewritable	Partially Embossed	Fully Embossed
$1 \le g_1 \le 1024$	$2 \le g_1 + g_2 \le 1024$	$1 \le g_2 \le 1024$
$m_1 \ge 0$	$g_1 \ge 1 \quad g_2 \ge 1$	$g_1 = 0$
$0 \le g_1 \times m_1 \le 1024$	$0 \le g_1 \times m_1 \le 1024$	$n_2/25$ = integer
	$m_1 \ge 0$	
$g_2 = 0$	$n_2/25$ = integer	$m_2/25$ = integer
$n_2 = m_2 = 0$	$m_2/25$ = integer	$m_2 \ge n_2/25$
	$m_2 \ge n_2/25$	$n_1 = m_1 = 0$

18.3 Rewritable Zone

The Rewritable Zone is intended for the user to write data into. The Recording field of all sectors in this zone shall not be embossed.

18.3.1 Location

If the disk is fully rewritable its Rewritable Zone shall extend from sector 0 of track 3 to sector 24 of track 9 996.

If the disk is partially embossed, its Rewritable Zone shall extend from sector 0 of track 3 to sector 24 of the track preceding the first track of the Embossed Zone.

18.3.2 Partitioning

During initialization of the disk, the Rewritable Zone shall be partitioned into g_1 consecutive groups of equal size followed by an unspecified number of remaining sectors (see table 6). The first group shall start at the beginning of the Rewritable Zone. Each group shall comprise n_1 Data Sectors followed by m_1 Spare Sectors, where m_1 may equal 0. The total number of Spare Sectors shall not exceed 1 024. The values of g_1, n_1 and m_1 shall have been recorded in the DDSs.

18.4 Embossed Zone

Partially and fully embossed disks shall have an Embossed Zone. It shall contain data embossed by the manufacturer of the disk. The layout of all sectors in this zone shall be as specified in clause 15.

18.4.1 Location

If the disk is partially embossed, the Embossed Zone shall start at sector 0 of the track with a track number greater than, or equal to, 32. This leaves at least 29 tracks after DMA2 for control information of the host operating system. The last track of the Embossed Zone on a partially embossed disk shall be track 9996 which shall contain no embossed data in the Recording field.

If the disk is fully embossed, the Embossed Zone shall start at sector 0 of track 3 and end at sector 24 of track 9 996.

The track numbers of both the first and last tracks of the Embossed Zone shall be recorded in the Control Zones.

Copyright International Organization for Standardization
Provided by IHS under license with ISO
No reproduction or networking permitted without license from IHS
Not for Resale

18.4.2 Partitioning

The Embossed Zone shall have been partitioned into g_2 consecutive groups of equal size (see table 6). Each group shall comprise n_2 Data Sectors followed by m_2 Parity Sectors. Both the Data Sector and Parity Sector areas of all groups shall start at sector 0. The values of n_2 and m_2 shall be integral multiples of 25, i.e. each group comprises a number of complete tracks with Data Sectors and Parity Sectors. Additionally, the value of m_2 shall be larger than, or equal to, $n_2/25$. The restriction on m_2 is due to the requirement to have one Parity Sector for each embossed track. Other restrictions which apply to g_2, n_2 and m_2 are specified in 18.2. The values of g_2, n_2 and m_2 shall have been recorded in the DDSs.

The first group shall start at the beginning of the Embossed Zone.

If the disk is partially or fully embossed, there may be a number of tracks remaining after the partitioning of the Embossed Zone. These remaining tracks shall be located after the groups. The Data fields of any unused sectors within the Embossed Zone shall have all user data bytes set to (FF), except track 9 996 of partially embossed disks which shall contain no embossed Recording field.

18.4.3 Parity Sectors

The embossed Parity Sectors provide an error correction system for embossed data over the user data bytes and bytes 513 to 516 of each sector in addition to the ECC. They allow the drive to correct one sector on a track that cannot be corrected by the ECC, assuring a high data integrity. If more than one sector on a track cannot be corrected by ECC, then it is not possible to recover any of these Defective Sectors by the use of Parity Sectors.

The Data field of a Parity Sector contains 516 parity bytes (PB), calculated as an Exclusive OR ($\oplus$) over the user data bytes and bytes 513 to 516 (DB), of the Data Sectors on one track of the group.

The algorithm shall be

$$PB_{T,n} = DB_{t,0,n} \oplus DB_{t,1,n} \oplus \ldots DB_{t,j,n} \oplus \ldots \oplus DB_{t,24,n}$$

where

$$1 \le t \le n_2 / 25$$

$$0 \le j \le 24$$

$$1 \le n \le 516$$

$PB_{T,n}$ is byte A_n of Parity Sector T, and $DB_{t,j,n}$ is byte A_n of sector j on track t of the group. A_n is defined in annex E. The parity bytes are calculated over the user data bytes and bytes 513 to 516, excluding the Resync bytes. The CRC, ECC, and Resync bytes as defined in annex E shall be required with each Parity Sector.

The Parity Sectors for each track of the group shall be stored consecutively in the m_2 sectors allocated to them in each group, starting with the first sector. The first Parity Sector of a group is associated with the first track with the Data Sectors of the same group, the second Parity Sector is associated with the second track with the Data Sectors, and so on until all tracks with Data Sectors have an associated Parity Sector. The contents of the Data field of the unused Parity Sectors shall be set to (FF) and shall contain data complying with the layout as given in table E.1. The number of unused Parity Sectors is $m_2 - (n_2/25)$.

19 Defect management in the Rewritable Zone

Defective Sectors in the groups of the Rewritable Zone, if replaced, shall be replaced by good sectors according to the defect management method described below. The disk shall be initialized before use. This International Standard allows disk initialization with or without certification. Defective Sectors are handled by a Linear Replacement Algorithm and optionally, a Slipping Algorithm. The total number of Defective Sectors replaced by both algorithms shall not be greater than 1024.

Copyright International Organization for Standardization
Provided by IHS under license with ISO
No reproduction or networking permitted without license from IHS
Not for Resale

19.1 Initialization of the disk

During initialization of the disk, the four DMAs are recorded prior to the first use of the disk. The Rewritable Zone shall be partitioned into g_1 groups, each containing n_1 Data Sectors and m_1 Spare Sectors as specified in 18.3.2. The Spare Sectors can be used as replacements for defective Data Sectors. Initialization can include a certification of the Rewritable Zone, in which procedure Defective Sectors are identified and skipped.

All DDS parameters shall be recorded in the four DDSs. The SDL and optionally the PDL shall be recorded in the four DMAs. The requirements for the recording of the PDLs and SDLs are stated in table 8.

19.2 Certification

If the disk is certified, the certification shall be applied to the Data Sectors and to the Spare Sectors in the groups. The method of certification is not stated by this International Standard. It may involve erasing, writing, and reading of all sectors in the groups. Defective Sectors found during certification shall be handled by the Slipping Algorithm (see 19.2.1) or, where applicable, by the Linear Replacement Algorithm (see 19.2.2). Defective Sectors shall not be used for reading or writing. Guidelines for replacing Defective Sectors are given in annex G.

19.2.1 Slipping Algorithm

The Slipping Algorithm shall be applied individually to each and every group in the Rewritable Zone if certification is performed.

A defective Data Sector found during certification shall be replaced by the first available good sector following the Defective Sector, and so causes a slip of one sector towards the end of the group. The last Data Sectors will slip into the Spare Sector area. The address of the Defective Sector is written in the PDL. If no Defective Sectors are found during certification, an empty PDL is recorded (see 19.5).

The addresses of Spare Sectors, beyond the last Data Sector slipped into the spare area (if any), which are found to be defective during certification shall be recorded in the PDL. Thus, the number of available Spare Sectors is diminished accordingly.

If the Spare Sector area of a group becomes exhausted during certification, the Defective Sector shall be handled by the Linear Replacement Algorithm. This process involves assigning a Replacement Sector from the spare area of another group and cannot be accomplished until the other group has been certified. This is due to the fact that the next available Spare Sector is not known until its group is certified, i.e. the Slipping Algorithm has been applied.

19.2.2 Linear Replacement Algorithm

The Linear Replacement Algorithm is used to handle Defective Sectors found after certification. It is also used during certification in the event of the spare area of a group becoming exhausted.

The Defective Sector shall be replaced by the first available good Spare Sector of the group. If there are no Spare Sectors left in the group, the Defective Sector shall be replaced by the first available good Spare Sector of another group. The addresses of the Defective Sector and of the Replacement Sector shall be recorded in the SDL.

19.3 Disks not certified

The Linear Replacement Algorithm is also used to handle sectors found defective on disks which have not been certified.

A Defective Sector shall be replaced by the first available good Spare Sector of the group. If there are no Spare Sectors left in the group, the Defective Sector shall be replaced by the first available Spare Sector of another group. The address of the Defective Sector and of the Replacement Sector shall be recorded in the SDL.

Copyright International Organization for Standardization
Provided by IHS under license with ISO
No reproduction or networking permitted without license from IHS
Not for Resale

19.4 Write procedure

When writing data in the sectors of a group, a Defective Sector listed in the PDL shall be ignored, and the data shall be written in the next Data Sector, according to the Slipping Algorithm. If a sector to be written is listed in the SDL, the data shall be written in the Spare Sector pointed to by the SDL, according to the Linear Replacement Algorithm.

19.5 Primary Defect List (PDL)

If the disk is certified during initialization, a PDL shall be recorded; this PDL may be empty.

If a list of Defective Sectors is obtained by a means other than certification during or before initialization, the PDL may be recorded.

If a disk is not certified and a list of Defective Sectors is not obtained by another means, no PDL shall be recorded.

The PDL shall contain the addresses of all Defective Sectors identified at initialization. The addresses shall be listed in ascending order. The PDL shall be recorded in the minimum number of sectors necessary, and it shall begin in the first user data byte of the first sector. All unused bytes of the last sector of the PDL shall be set to (FF). The information in table 11 shall be recorded in each PDL.

In the case of a multiple-sector PDL, the list of addresses of the Defective Sectors shall continue with the first byte of the second and subsequent sectors. Thus, the PDL Identifier and the number of addresses of the PDL shall be present only in the first sector.

In an empty PDL bytes 2 and 3 shall be set to (00) and bytes 4 to 511 shall be set to (FF).

Table 11 - Content of the PDL

Byte	PDL Content
0	(00), PDL Identifier
1	(01), PDL Identifier
2	Number of Addresses in the PDL, MSB
3	Number of Addresses in the PDL, LSB (if bytes 2 and 3 are (00), byte 3 is the end of the PDL)
4	Address of the First Defective Sector (Track Number, MSB)
5	Address of the First Defective Sector (Track Number)
6	Address of the First Defective Sector (Track Number, LSB)
7	Address of the First Defective Sector (Sector Number)
	...
x-3	Address of the Last Defective Sector (Track Number, MSB)
x-2	Address of the Last Defective Sector (Track Number)
x-1	Address of the Last Defective Sector (Track Number, LSB)
x	Address of the Last Defective Sector (Sector Number)

19.6 Secondary Defect List (SDL)

The Secondary Defect List (SDL) is created during initialization and used during and after certification. All disks with a Rewritable Zone shall have an SDL recorded during initialization.

The SDL shall contain entries in the form of addresses of defective Data Sectors and addresses of the Spare Sectors which replace them. Each entry in the SDL contains 8 bytes, viz. four each for the address of a Defective Sector and for the address of its Replacement Sector.

Copyright International Organization for Standardization
Provided by IHS under license with ISO
No reproduction or networking permitted without license from IHS
Not for Resale

The list of addresses shall contain the addresses of the Defective Sectors and their Replacement Sectors. The addresses of the Defective Sectors shall be in ascending order.

The SDL shall be recorded in the minimum number of sectors necessary, and it shall begin in the first user data byte of the first sector. All unused bytes of the last sector of the SDL shall be set to (FF). The following information shall be recorded in each of the four SDLs.

The addresses of sectors already recorded in the PDL shall not be recorded in the SDL.

If a Replacement Sector listed in the SDL is later found to be defective, a new entry shall be made in the SDL indicating a Replacement Sector for that Defective Sector.

In the case of a multiple-sector SDL, the list of addresses of Defective and of Replacement Sectors shall continue with the first byte of the second and subsequent sectors. Thus, the contents of bytes 0 to 15 in table 12 shall be present only in the first sector.

Copyright International Organization for Standardization
Provided by IHS under license with ISO
No reproduction or networking permitted without license from IHS
Not for Resale

Table 12 - Content of the SDL

Byte	SDL Content
0	(00), SDL Identifier
1	(02), SDL Identifier
2	(00)
3	(01)
4	List Length in bytes in the SDL, MSB
5	List Length in bytes in the SDL, LSB (This Count begins at byte 6)
6-7	(00)
8	(02)
9	(01)
10-13	(00)
14	Number of Entries in the SDL, MSB
15	Number of Entries in the SDL, LSB (Each entry is 8 bytes long)
16	Address of the First Defective Sector (Track Number, MSB)
17	Address of the First Defective Sector (Track Number)
18	Address of the First Defective Sector (Track Number, LSB)
19	Address of the First Defective Sector (Sector Number)
20	Address of the First Replacement Sector (Track Number, MSB)
21	Address of the First Replacement Sector (Track Number)
22	Address of the First Replacement Sector (Track Number, LSB)
23	Address of the First Replacement Sector (Sector Number)
	...
y-7	Address of the Last Defective Sector (Track Number, MSB)
y-6	Address of the Last Defective Sector (Track Number)
y-5	Address of the Last Defective Sector (Track Number, LSB)
y-4	Address of the Last Defective Sector (Sector Number)
y-3	Address of the Last Replacement Sector (Track Number, MSB)
y-2	Address of the Last Replacement Sector (Track Number)
y-1	Address of the Last Replacement Sector (Track Number, LSB)
y	Address of the Last Replacement Sector (Sector Number)

Section 4 - Characteristics of embossed information

20 Method of testing

The format of the embossed information on the disk is defined in clauses 13 to 18. Clauses 21 to 23 specify the requirements for the signals from grooves, Headers and embossed data, as obtained when using the two different Reference Drives defined in clause 9 with a wavelength of 780 nm and 825 nm, respectively.

Clauses 21 to 23 specify only the average quality of the embossed information. Local deviations from the specified values, called defects, can cause tracking errors, erroneous Headers or errors in the Data fields. These errors are covered by section 6.

20.1 Environment

All signals in clauses 21 to 23 shall be within their specified ranges with the cartridge in any environment in the range of allowed operating environments defined in 8.1.2.

Copyright International Organization for Standardization
Provided by IHS under license with ISO
No reproduction or networking permitted without license from IHS
Not for Resale

20.2 Use of the Reference Drive

All signals specified in clauses 21 to 23 shall be measured in the indicated channels of the Reference Drive. The drive shall have the following characteristics for the purpose of these tests.

20.2.1 Optics and mechanics

The focussed optical beam shall have the properties defined in 9.2 a) to f). The disk shall rotate as specified in 9.5.

20.2.2 Read power

For the wavelengths 825 nm and 780 nm, the optical power incident on the entrance surface of the disk (used for reading the information) shall be in the range from 1,0 mW to P_{max}.

P_{max} shall be in the range

$$1{,}2 \text{ mW} \leq P_{max} \leq 1{,}3 \text{ mW}$$

P_{max} shall be specified in bytes 21 and 135 of the Control Zone.

For other wavelengths the values for this range are not specified by this International Standard.

Note 4 - The recommended values for P_{max} at other rotational frequencies are given in annex J.

20.2.3 Read channels

The drive shall have a read channel, in which the total amount of light in the exit pupil of the objective lens is measured. This channel can have the implementation as given by Channel 1 in 9.1.

20.2.4 Tracking

During the measurement of the signals, the axial tracking error between the focus of the optical beam and recording layer shall not exceed

$$e_{max}(\text{axial}) = 1{,}0 \text{ µm}$$

and the radial tracking error between the focus of the optical beam and the centre of a track shall not exceed

$$e_{max}(\text{radial}) = 0{,}10 \text{ µm}$$

The radial tracking servo used for this measurement requires a higher performance than that specified in 11.4.8.

20.3 Definition of signals

All signals are linearly related to currents through a photo-diode detector, and are therefore linearly related to the optical power falling on the detector.

The signals from the two halves of the split photo-diode detector in the tracking channel are indicated by I_1 and I_2. The signals in the tracking channel are referenced to the signal $(I_1 + I_2)_a$, which is the sum of the signals obtained from an unrecorded, ungrooved area in the Information Zone, such as the ungrooved part of the Initial Zone or the ODF in a sector.

The signals in Channel 1 are referenced to the signal I_0, which is the signal in Channel 1 from an unrecorded, ungrooved area in the Information Zone.

Figure 17 shows the signals specified in clauses 21, 22 and 23.

Copyright International Organization for Standardization
Provided by IHS under license with ISO
No reproduction or networking permitted without license from IHS
Not for Resale

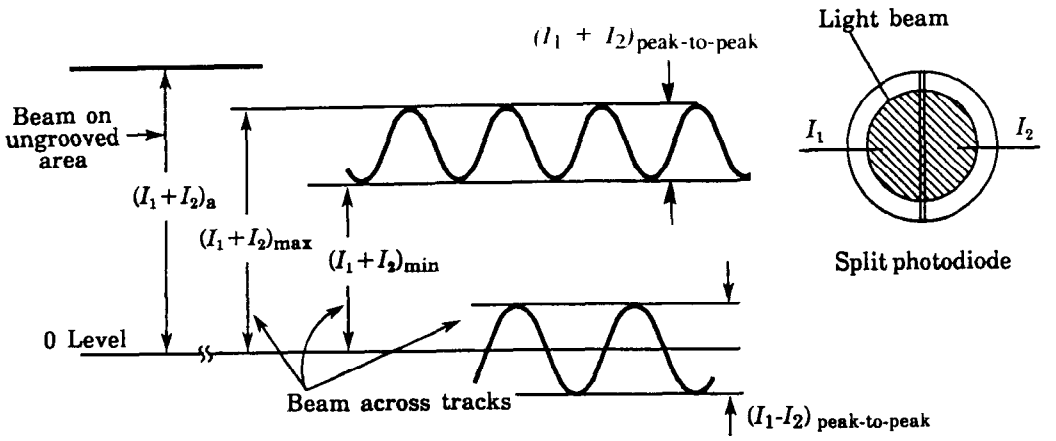

Signals from grooves in the tracking channel

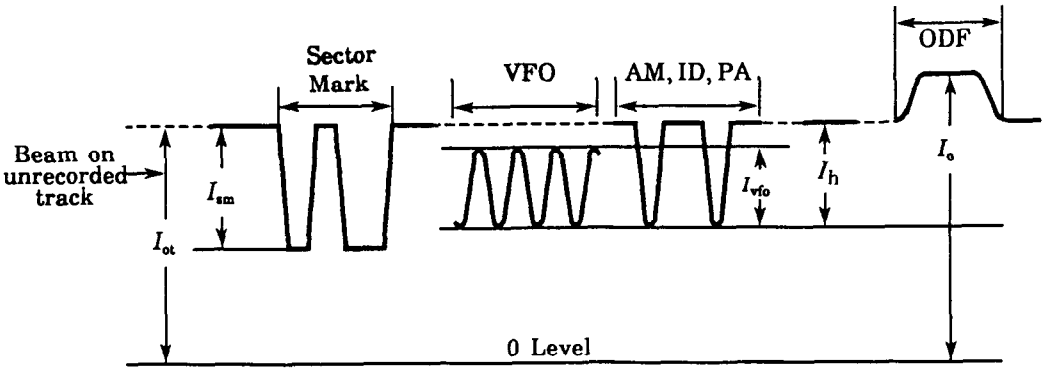

Signals from Headers in Channel 1

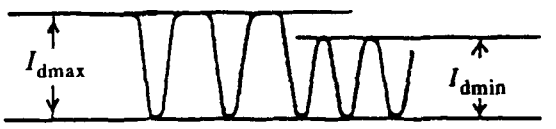

0 Level

Signals from Recording fields in Channel 1

Figure 17 - Signals from embossed areas

Copyright International Organization for Standardization
Provided by IHS under license with ISO
No reproduction or networking permitted without license from IHS
Not for Resale

21 Signals from grooves

The signals $(I_1 + I_2)$ and $(I_1 - I_2)$ shall be filtered in order that frequencies above 1 MHz are attenuated by at least 40 dB thereby eliminating the effect of modulation due to embossed marks. This condition shall not apply to the measurement of the signal $(I_1 + I_2)_a$.

The shape of the grooves and the embossed information shall be such that the following requirements are met (see annex R).

21.1 Cross-track signal

The cross-track signal is the sinusoidal sum signal $(I_1 + I_2)$ in the tracking channel, when the focus of the optical beam crosses the tracks. The signal can be used by the drive to locate the centre of the tracks. The peak-to-peak value of the cross-track signal shall meet the following requirements:

a) in areas containing embossed Headers and embossed Recording fields:

For 780 nm

$$0{,}14 \le \frac{(I_1 + I_2)_{pp}}{(I_1 + I_2)_a} \le 0{,}59$$

For 825 nm

$$0{,}10 \le \frac{(I_1 + I_2)_{pp}}{(I_1 + I_2)_a} \le 0{,}50$$

b) in grooved areas in the Information Zone without embossed Recording fields:

For 780 nm

$$0{,}25 \le \frac{(I_1 + I_2)_{pp}}{(I_1 + I_2)_a} \le 0{,}71$$

For 825 nm

$$0{,}20 \le \frac{(I_1 + I_2)_{pp}}{(I_1 + I_2)_a} \le 0{,}60$$

The uniformity of the cross-track signal shall be such that the above ratio shall not vary by more than 15 % over any grooved area in the Information Zone without embossed Recording fields.

21.2 Cross-track minimum signal

The cross-track minimum signal is the minimum of the sum signal $(I_1 + I_2)_{min}$ in the tracking channel, when the optical beam crosses the tracks. The cross-track minimum signal shall meet the following requirements:

For 780 nm

$$\frac{(I_1 + I_2)_{min}}{(I_1 + I_2)_a} \ge 0{,}25$$

For 825 nm

$$\frac{(I_1 + I_2)_{min}}{(I_1 + I_2)_a} \ge 0{,}30$$

in grooved areas in the Information Zone with or without embossed data.

21.3 Push-pull signal

The push-pull signal is the sinusoidal difference signal $(I_1 - I_2)$ in the tracking channel, when the focus of the optical beam crosses the tracks. The signal can be used by the drive for radial tracking. The peak-to-peak value of the push-pull signal shall meet the following requirements:

a) in grooved areas with embossed data in the Information Zone:

Copyright International Organization for Standardization
Provided by IHS under license with ISO
No reproduction or networking permitted without license from IHS
Not for Resale

For 780 nm

$$0,38 \leq \frac{(I_1 - I_2)_{pp}}{(I_1 + I_2)_a} \leq 0,71$$

For 825 nm

$$0,35 \leq \frac{(I_1 - I_2)_{pp}}{(I_1 + I_2)_a} \leq 0,70$$

b) in grooved areas in the Information Zone without embossed Recording fields:

For 780 nm

$$0,52 \leq \frac{(I_1 - I_2)_{pp}}{(I_1 + I_2)_a} \leq 0,71$$

For 825 nm

$$0,50 \leq \frac{(I_1 - I_2)_{pp}}{(I_1 + I_2)_a} \leq 0,70$$

21.4 Divided push-pull signal

The first term of the divided push-pull signal is the peak-to-peak amplitude derived from the instantaneous level of the differential output (I_1 - I_2) from the split photodiode detector when the light beam crosses the unrecorded or preformatted data area of grooved tracks divided by the instantaneous level of the sum output (I_1 + I_2) from the split photodiode detector when the light beam crosses these areas.

The second term of the divided push-pull signal is the ratio of the minimum peak-to-peak amplitude derived from the instantaneous level of the differential output (I_1 - I_2) divided by the instantaneous level of the sum output (I_1 + I_2) from the split photodiode detector when the light beam crosses the preformatted data area of grooved tracks to the maximum peak-to-peak amplitude derived from the instantaneous level of the differential output (I_1 - I_2) divided by the instantaneous level of the sum output (I_1 + I_2) from the split photodiode detector when the light beam crosses the preformatted data area of grooved tracks.

The split photodiode detector separator shall be parallel to the projected track axis. In this measurement, the I_1 and I_2 signals shall be provided by the split photodiode detector. The tracking servo shall be operating in open-loop mode during this measurement.

The first term shall meet the following requirements:

For 780 nm

$$0,74 \leq \left(\frac{I_1 - I_2}{I_1 + I_2}\right)_{pp} \leq 1,05$$

For 825 nm

$$0,70 \leq \left(\frac{I_1 - I_2}{I_1 + I_2}\right)_{pp} \leq 1,05$$

The second term shall satisfy:

For 780 nm and 825 nm

$$\frac{\left(\frac{I_1 - I_2}{I_1 + I_2}\right)_{pp_{min}}}{\left(\frac{I_1 - I_2}{I_1 + I_2}\right)_{pp_{max}}} \geq 0,7$$

21.5 On-track signal

The on-track signal is the signal in Channel 1 when tracking in a grooved area without embossed data. The on-track signal I_{ot} shall meet the following requirements:

Copyright International Organization for Standardization
Provided by IHS under license with ISO
No reproduction or networking permitted without license from IHS
Not for Resale

For 780 nm	For 825 nm
$0,72 \leq \frac{I_{ot}}{I_o} \leq 1,00$	$0,70 \leq \frac{I_{ot}}{I_o} \leq 1,00$

21.6 Phase depth

The phase depth of the grooves shall be less than 180°.

21.7 Track location

The tracks are located at those radii on the disk where the push-pull signal equals 0 and the cross-track signal has its maximum value.

22 Signals from Headers

The signals obtained from the embossed Headers shall be measured in Channel 1 of the Reference Drive.

The signal from an embossed mark in the recording layer is defined as the peak-to-peak value of the modulation of the signal in Channel 1 caused by the mark when the beam follows a recorded track (see annex R).

The level of all signals from embossed marks shall be lower than I_{ot}.

22.1 Sector Mark

The signal I_{sm} from the Sector Mark shall meet the following requirements:

For 780 nm	For 825 nm
$I_{sm} / I_o \geq 0,53$	$I_{sm} / I_o \geq 0,50$

22.2 VFO_1 and VFO_2

The signal I_{vfo} from the marks in the VFO_1 and VFO_2 fields shall meet the following requirements:

For 780 nm	For 825 nm
$I_{vfo} / I_o \geq 0,23$	$I_{vfo} / I_o \geq 0,20$

In addition the condition

For 780 nm	For 825 nm
$I_{vfo} / I_{hmax} \geq 0,53$	$I_{vfo} / I_{hmax} \geq 0,50$

shall be satisfied within each Header, where I_{hmax} is the maximum signal from marks of that Header in the fields defined in 22.3.

22.3 Address Mark, ID field and Postamble

The signal I_h from marks in the Address Mark, ID and Postamble fields shall meet the following requirements:

For 780 nm	For 825 nm
$I_h / I_o \geq 0,23$	$I_h / I_o \geq 0,20$
$I_{hmin} / I_{hmax} \geq 0,53$	$I_{hmin} / I_{hmax} \geq 0,50$

The last requirement applies over any Header. I_{hmin} and I_{hmax} are the signals with minimum and maximum amplitude in those fields of a sector mentioned above.

Copyright International Organization for Standardization
Provided by IHS under license with ISO
No reproduction or networking permitted without license from IHS
Not for Resale

23 Signals from embossed Recording fields

If the disk has an Embossed Zone, the Recording field of all sectors in this Zone shall contain embossed marks. The signals from these marks shall be measured in Channel 1 (see 9.1 and annex R). Acceptable defects of the marks are specified in section 6. The signal from all embossed Recording fields is defined as the peak-to-peak value of the modulation of the signal.

The signal I_d from marks in the Recording fields of the Embossed Zone shall meet the following requirements:

For 780 nm	For 825 nm
$I_d / I_o \geq 0{,}23$	$I_d / I_o \geq 0{,}20$
$I_{dmin} / I_{dmax} \geq 0{,}53$	$I_{dmin} / I_{dmax} \geq 0{,}50$

The last requirement applies over Recording fields. I_{dmin} and I_{dmax} are the signals with minimum and maximum amplitude in the Recording field of a sector.

For the Focus tracks in the Acquire Zone, only I_d / I_o is defined.

Section 5 - Characteristics of the recording layer

24 Method of testing

Clauses 25 to 27 describe a series of tests to assess the magneto-optical properties of the recording layer, as used for writing and erasing data. The tests shall be performed only in the Recording field of the sectors in the Rewritable Zone. If there is no Rewritable Zone for user recording, clauses 26 to 28 shall not apply. The write, read and erase operations necessary for the tests shall be made on the same Reference Drive (see also annex J).

Clauses 25 to 27 specify only the average quality of the recording layer. Local deviations from the specified values, called defects, can cause write or erase problems. These defects are covered by section 6.

24.1 Environment

All signals in clauses 25 to 27 shall be within their specified ranges with the cartridge in any environment in the range of allowed operating environments defined in 8.1.2.

24.2 Reference Drive

The write and erase tests described in clauses 25 to 27 shall be measured in Channel 2 of the Reference Drive. The drive shall have the following characteristics for the purpose of these tests.

24.2.1 Optics and mechanics

The focussed optical beam shall have the properties defined in 9.2 a) to f). The disk shall rotate as specified in 9.5.

24.2.2 Read power

The optical power incident on the entrance surface of the disk and used for reading the information shall be in the range from 1,0 mW to P_{max}.

24.2.3 Read channel

The Reference Drive shall have a read channel which can detect magneto-optical marks in the recording layer. This channel shall have an implementation equivalent to that given by Channel 2 in 9.3.

Copyright International Organization for Standardization
Provided by IHS under license with ISO
No reproduction or networking permitted without license from IHS
Not for Resale

24.2.4 Tracking

During the measurement of the signals, the focus of the optical beam shall follow the tracks as specified in 20.2.4.

24.3 Write conditions

Marks are written on the disk by pulses of optical power superimposed on a bias power, in the presence of a magnetic field.

24.3.1 Write pulse

The shape of the write pulse shall be as given in figure 18.

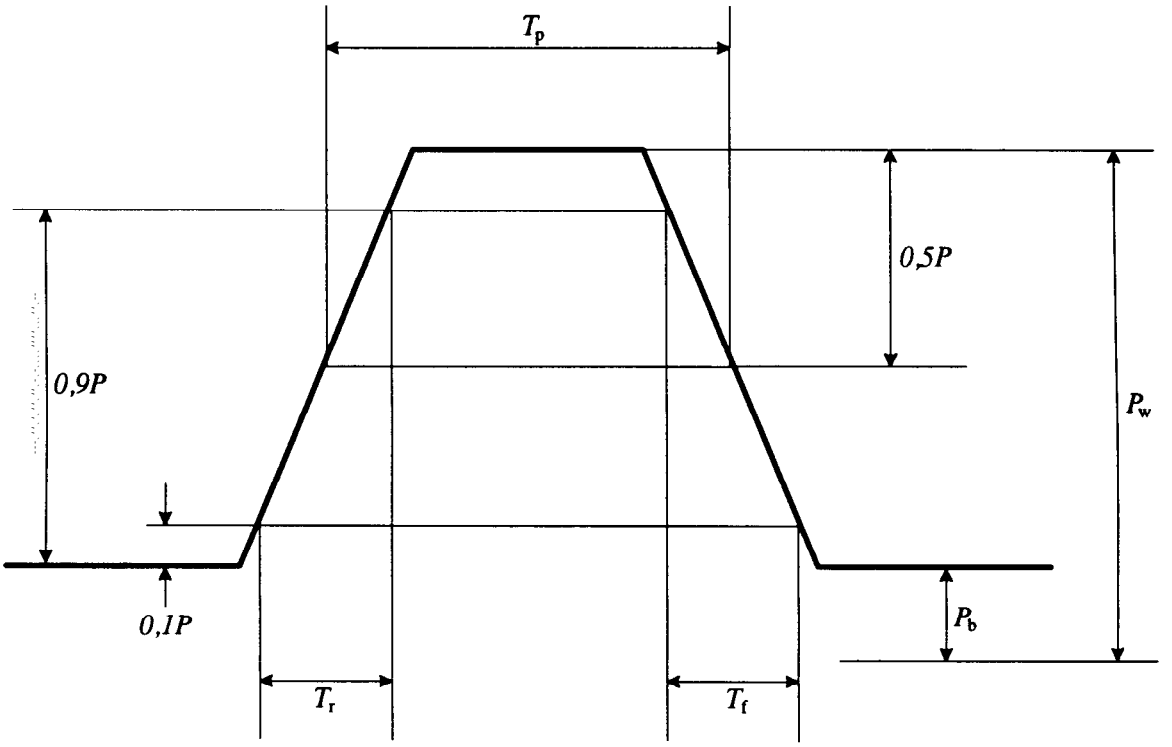

P_w : write power
P_b : bias power
T_r : rise time
T_f : fall time
T_p : write pulse width
P : P_w - P_b

Figure 18 - Shape of write pulse

The rise and fall times T_r and T_f shall each be less than 15 ns when the pulse width T_p exceeds 100 ns. They shall each be less than (0,1 T_p + 5) when T_p is less than 100 ns.

24.3.2 Write power and pulse width

The write power is the optical power incident on the entrance surface of the disk and used for writing marks.

The bias power P_b shall be set between 0,9 mW and 1,1 mW.

The tests shall be carried out at a temperature of 23 °C ± 2 °C, at either

- one of the three constant pulse widths T_p and a write power P_w appropriate to the radius, as given in bytes 22 to 30 and 136 to 144 of the Control data (see annex F), or

Copyright International Organization for Standardization
Provided by IHS under license with ISO
No reproduction or networking permitted without license from IHS
Not for Resale

- a constant pulse power P_w given in bytes 31 and 145, and a pulse width appropriate to the radius given in bytes 32 to 34 and 146 to 148, respectively, of the Control data (see annex F).

For radii other than those specified the values shall be linearly interpolated. The actual power and pulse width used shall be within ± 5 % of those selected.

For other temperatures, the values should be compensated as shown in annex J, in which recommended maximum write powers for two optional rotational frequencies are also shown.

The required write power shall not exceed

$$61\left(\frac{1}{T_p}+\frac{1}{\sqrt{T_p}}\right)\text{mW for } T_p \leq 92\text{ ns}$$

or

$$7\text{ mW for } T_p > 92\text{ ns.}$$

T_p is expressed in nanoseconds.

24.3.3 Write magnetic field

The requirements of all tests shall be met for all magnetic field intensities at the recording layer during writing in the range from 16 000 A/m to 32 000 A/m.

The write magnetic field, pointing in the North to South direction, shall be within 15° from the normal to the disk reference plane P, in the direction of the incident beam, i.e. from the entrance surface to the recording layer.

24.4 Erase conditions

Marks are erased from the disk by a constant optical power in the presence of a magnetic field.

24.4.1 Erase power

The erase power is the optical power incident on the entrance surface of the disk and used for erasing marks. The erase power shall not exceed the value calculated according to the formula in 24.3.2.

The tests shall be carried out at a temperature of 23 °C ± 2 °C and with an erase power appropriate to the radius, given in bytes 45 to 47 and 159 to 161 of the Control data (see annex F). For radii other than those specified the values shall be linearly interpolated. The actual power used shall be within ± 10 % of that selected.

For other temperatures the values should be compensated as shown in annex J, in which recommended maximum erase powers for two optional rotational frequencies are also shown.

24.4.2 Erase magnetic field

The requirements of all tests shall be met for all magnetic field intensities at the recording layer during erasing in the range from 16 000 A/m to 32 000 A/m.

The erase magnetic field, pointing in the North to South direction, shall be within 15° from the normal to the disk reference plane P, in the direction of the reflected beam, i.e. from the recording layer to the entrance surface.

24.5 Definition of signals

The signals in Channel 2 are linearly related to the difference between the currents through the photo-diode detectors K_1 and K_2, and are therefore linearly related to the optical power falling on the detectors (see 9.1).

Copyright International Organization for Standardization
Provided by IHS under license with ISO
No reproduction or networking permitted without license from IHS
Not for Resale

25 Magneto-optical characteristics

25.1 Figure of merit

The figure of merit F of the recording layer is a measure of the magnitude of the signal obtained from magneto-optical marks. It is defined as $R \sin\theta \cos 2\beta$, where R is the reflectance of the disk expressed as a decimal fraction, θ is the Kerr rotation of the optical polarization between a mark and no-mark, and β is the ellipticity of the reflected beam, averaged over the aperture. The polarity of the figure of merit is defined to be negative for a magneto-optical mark written in an Fe-rich Fe-Tb alloy recording layer with the write magnetic field in the direction specified in 24.3.3. In this case the direction of the Kerr rotation is counter-clockwise as seen from the incident beam.

The polarity and magnitude of the value of the figure of merit shall be as specified in byte 10 and 11 of the Control data (see annex F). The figure of merit shall comply with

$$0{,}0025 < |F| < 0{,}0050$$

25.2 Imbalance of the magneto-optical signal

The imbalance of the magneto-optical signal is the d.c. offset of the signal from Channel 2 of the Reference Drive, which can be due to birefringence of the substrate. The offset can be measured by writing marks on the disk in the low-frequency region where the modulation transfer function of the optical system is one, as in annex H. One can also use a series of marks that give a 50 % duty cycle read signal. The offset is now the signal level halfway between the extremes of the signal.

The imbalance shall be such that the offset in Channel 2 divided by the signal in Channel 1 shall not exceed 0,06 in the Recording field of any sector in the Rewritable Zone. The imbalance shall be measured in a bandwidth from d.c. to 40 kHz. The imbalance is specified for a Reference Drive with a beam splitter E with nominal values for the reflectances, the phase retarder shall be in the neutral position (see 9.1).

26 Write characteristics

26.1 Resolution

The resolution is the ratio of the signal amplitude from a high-density pattern of marks to the signal amplitude from a low-density pattern of marks. It shall be measured as follows.

Write two series of marks, one spaced eight Channel bits apart and one spaced three Channel bits apart, in the Recording field of a sector. The write conditions shall be as specified in 24.3.

Read the signals in Channel 2 under the conditions specified in 24.2.2 and 24.2.3. *IL* is the peak-to-peak value of the signal obtained from the widely spaced marks, *IH* is the peak-to-peak value of the signal obtained from the narrowly spaced marks.

The resolution *IH* /*IL* shall not be less than 0,4 within any sector in the Rewritable Zone for all allowed values of the write magnetic field.

26.2 Narrow-band signal-to-noise ratio

The narrow-band signal-to-noise ratio is the ratio of the signal level to the noise level of a specified pattern, measured in a 30 kHz bandwidth. It shall be determined as follows.

Write a series of marks spaced three Channel bits apart in the Recording fields of a series of sectors. The write conditions shall be as specified in 24.3.

Read the Recording fields in Channel 2 under the conditions specified in 24.2.2 and 24.2.3, using a spectrum analyser with a bandwidth of 30 kHz. Measure the amplitudes of the signal at 2,9 MHz ± 0,1 MHz and the noise at this frequency as

Copyright International Organization for Standardization
Provided by IHS under license with ISO
No reproduction or networking permitted without license from IHS
Not for Resale

indicated in figure 19. The measurements shall be corrected for the effect of the Header fields, in order to obtain the value for the Recording field only. The narrow-band signal-to-noise ratio is

$$20 \log_{10}\left(\frac{\text{signal level}}{\text{noise level}}\right)$$

The narrow-band signal-to-noise ratio shall be greater than 45 dB in any sector in the Rewritable Zone for all allowed values of the write magnetic field and for all phase differences between -15° and +15° in the optical system as defined in 9.1.

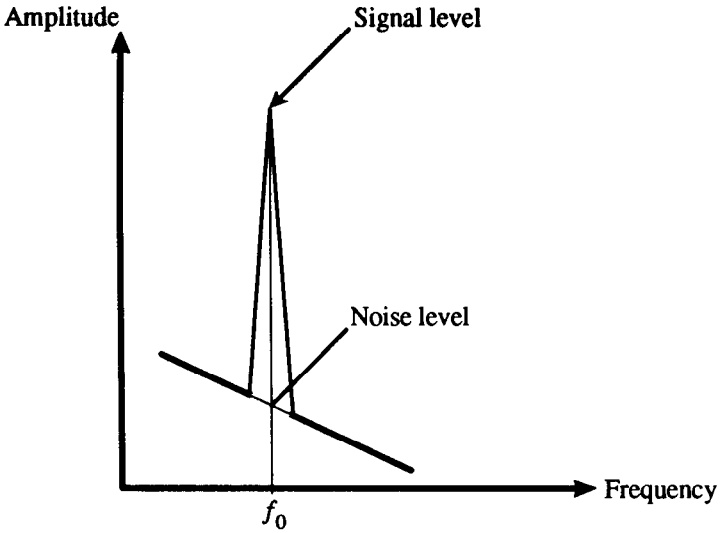

Figure 19 - Spectrum analyser display

26.3 Cross-talk

The test on cross-talk shall be carried out on any group of five adjacent unrecorded tracks, designated (n-2), (n-1), n, (n+1), (n+2), in the Rewritable Zone according to the following procedure:

- Erase the Recording field of each of the sectors in these tracks.
- Write a series of marks spaced eight Channel bits apart in the Recording fields of the sectors in track n. The write conditions shall be as specified in 24.3.
- Read the Recording fields of the sectors in the tracks (n-1), n and (n+1) under the conditions specified in 24.2.2 and 24.2.3.

The cross-talk from a track n to track (n-1) and to track (n+1) shall be lower than -27 dB.

27 Erase characteristics

Procedure:

a) Write a series of marks spaced three Channel bits apart in the Recording fields of any series of sectors in the Rewritable Zone. The write conditions shall be as specified in 24.3.

b) Read the Recording fields under the conditions specified in 24.2.2 and 24.2.3, using a spectrum analyser with a bandwidth of 30 kHz. Note the amplitude of the signal (as specified in 26.2).

c) Erase under the conditions specified in 24.4.

d) Repeat a) and c) 1 000 times.

e) Repeat a).

Copyright International Organization for Standardization
Provided by IHS under license with ISO
No reproduction or networking permitted without license from IHS
Not for Resale

f) Repeat b); note the amplitude of the signal and the noise (as specified in 26.2).

g) Repeat c); note the amplitude of the residual signal of the written mark at the same frequency as in f).

Requirements:

1) The narrow-band signal-to-noise ratio calculated from the readings in f) shall be greater than 45 dB.

2) The residual signal in g) shall be less than -40 dB relative to the signal level of the written marks in b).

Section 6 - Characteristics of user data

28 Method of testing

Clauses 29 and 30 describe a series of measurements to test conformance of the user data on the disk with this International Standard. It checks the legibility of both embossed and user-written data. The data is assumed to be arbitrary. The user-written data may have been written by any drive in any environment. The read tests shall be performed on the Reference Drive.

Whereas clauses 20 to 27 disregard defects, clauses 29 and 30 include them as an unavoidable deterioration of the read signals. The gravity of a defect is determined by the correctability of the ensuing errors by the error detection and correction circuit in the read channel defined below. The requirements in clauses 29 and 30 define a minimum quality of the data, necessary for data interchange.

28.1 Environment

All signals in clauses 29 to 30 shall be within their specified ranges with the cartridge in any environment in the range of allowed operating environments defined in 8.1.2. It is recommended that before testing the entrance surface of the optical disk shall be cleaned according to the instructions of the manufacturer of the disk.

28.2 Reference Drive

All signals specified in clauses 29 to 30 shall be measured in the indicated channels of the Reference Drive. The drive shall have the following characteristics for the purpose of these tests:

28.2.1 Optics and mechanics

The focussed optical beam shall have the properties already defined in 9.2 a) to f). The disk shall rotate as specified in 9.5.

28.2.2 Read power

The optical power incident on the entrance surface of the disk (used for reading the information) shall be in the range from 1,0 mW to P_{max}.

28.2.3 Read amplifiers

The read amplifiers after the photo-detectors in Channels 1 and 2 shall be as specified in 9.3.

28.2.4 Analog-to-binary converters

The signals from both read amplifiers shall be converted from analog-to-binary with a peak detector.

The converter for Channel 1 shall operate correctly for analog signals from embossed marks with amplitudes as determined by clauses 22 and 23.

The converter for Channel 2 shall operate correctly for analog signals from user-written marks with an amplitude as determined by clauses 25 and 26.

Copyright International Organization for Standardization
Provided by IHS under license with ISO
No reproduction or networking permitted without license from IHS
Not for Resale

28.2.5 Error correction

Correction of errors in the data bytes shall be carried out by an error detection and correction system based on the definition in E.3 of annex E. There shall be an additional correction system for the embossed data, based on the Parity Sectors as defined in 18.4.3.

28.2.6 Tracking

During measurement of the signals, the focus of the optical beam shall follow the tracks as specified in 20.2.4.

29 Minimum quality of a sector

This clause specifies the minimum quality of the Header and Recording field of a sector as required for interchange of the data contained in that sector. The quality shall be measured on the Reference Drive specified in 28.2.

A byte error occurs when one or more bits in a byte have a wrong setting, as detected by the ECC and/or CRC circuits.

29.1 Headers

29.1.1 Sector Mark

At least three of the five long marks of the Sector Mark shall have the timing specified in 15.2 and the signals shall have the amplitude specified in 22.1.

29.1.2 ID fields

At least one of the three ID fields in a Header read in Channel 1 shall not have any byte errors, as checked by the CRC in the field.

Note 5 - This involves correct capture of the data clock on the preceding VFO_1 or VFO_2 field and correct byte synchronization on the preceding Address Mark.

29.2 User-written data

The user-written data in a sector as read in Channel 2 shall not contain any byte errors that cannot be corrected by the error correction defined in 28.2.5.

Note 6 - This involves correct capture of the data clock on the preceding VFO_3 field and correct byte synchronization on the preceding data Sync.

29.3 Embossed data

The embossed data in a sector as read in Channel 1 shall not contain any byte errors that cannot be corrected by the error correction defined in 28.2.5.

Note 7 - This involves correct capture of the data clock on the preceding VFO_3 field and correct byte synchronization on the preceding data Sync.

30 Data interchange requirements

A disk offered for interchange of data shall comply with the following requirements.

30.1 Tracking

The focus of the optical beam shall not jump tracks unintentionally.

Copyright International Organization for Standardization
Provided by IHS under license with ISO
No reproduction or networking permitted without license from IHS
Not for Resale

30.2 User-written data

Any sector written in the Rewritable Zone that does not comply with 29.1 and 29.2 shall have been replaced according to the rules of the defect management as defined in clause 19.

30.3 Embossed data

Any sector in the Embossed Zone that does not comply with 29.1 and 29.3 shall be correctable by the error correction based on the Parity Sectors as defined in 18.4.3.

30.4 Quality of disk

The quality of the disk is reflected in the number of replaced sectors in the Rewritable Zone. This International Standard allows a maximum of 1 024 replaced sectors. The maximum number acceptable to a user remains a matter of agreement between purchaser and supplier.

Copyright International Organization for Standardization
Provided by IHS under license with ISO
No reproduction or networking permitted without license from IHS
Not for Resale

Annex A
(normative)
Edge distortion test

A.1 The distortion test checks if the case is free from unacceptable distortions and protrusions along its edges. The test is made by causing the cartridge to pass through the vertical slot of a gauge while applying a specified force including the gravitational pull.

A.2 The gauge shall be made of a suitable material, e.g. of chrome-plated carbon steel. The inner surfaces shall be polished to a surface finish of 5 µm peak-to-peak.

A.3 The dimensions shall be as follows (see figure A.1):

L_a = 96,0 mm min.

L_b = 91,0 mm ± 0,1 mm

L_c = 8,6 mm $^{+\ 0,1\ mm}_{-\ 0,0\ mm}$

L_d = 6,30 mm ± 0,01 mm

L_e = 6,80 mm min.

A.4 When the cartridge is inserted vertically into the gauge, a vertical downward force F_i of 0,8 N maximum applied to the centre of the top edge of the cartridge shall cause the cartridge to pass through the gauge.

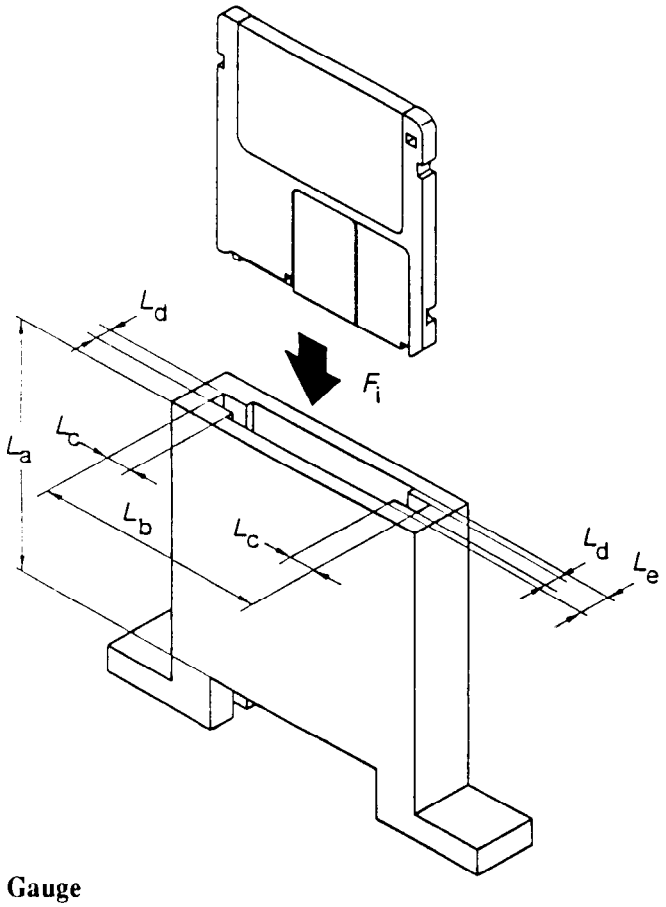

Figure A.1 - Distortion Gauge

Copyright International Organization for Standardization
Provided by IHS under license with ISO
No reproduction or networking permitted without license from IHS
Not for Resale

Annex B
(normative)

Compliance test

B.1 The compliance test checks the flatness and flexibility of the case by forcing the four reference surfaces of the case into a plane. The test is made by placing the cartridge on the supports of a gauge and applying forces on the cartridge opposite to the supports.

B.2 The location of the four reference surfaces S1, S2, S3 and S4 is defined in 10.3.4 and figure 4.

B.3 The test gauge consists of a base plate on which four posts P1, P2, P3 and P4 are fixed so as to correspond to the four surfaces S1, S2, S3 and S4, respectively (see figure B.1). The dimensions are as follows (see figure B.2):

Posts P1 and P2

$D_a = 6{,}50 \text{ mm} \pm 0{,}01 \text{ mm}$

$D_b = 3{,}50 \text{ mm} \begin{matrix} +\,0{,}00 \text{ mm} \\ -\,0{,}02 \text{ mm} \end{matrix}$

$H_a = 1{,}0 \pm 0{,}1 \text{ mm}$

$H_b = 2{,}0 \text{ mm max.}$

Posts P3 and P4

$D_c = 5{,}50 \text{ mm} \pm 0{,}01 \text{ mm.}$

The top area ($H_b - H_a$) of posts P1 and P2 has a chamfer.

After assembly, the upper annular surfaces of the four posts shall lie between two horizontal planes spaced 0,01 mm apart.

B.4 The cartridge shall be placed with its reference surfaces onto the posts of the horizontal gauge. A vertical downward force F_c of 0,4 N shall be exerted on the cartridge opposite each of the four posts.

B.5 Requirements

Under the conditions of B.4, three of the four surfaces S1 to S4 shall be in contact with the annular surface of their respective posts, and any gap between the remaining surface S and the annular surface of its post shall not exceed 0,1 mm.

Copyright International Organization for Standardization
Provided by IHS under license with ISO
No reproduction or networking permitted without license from IHS
Not for Resale

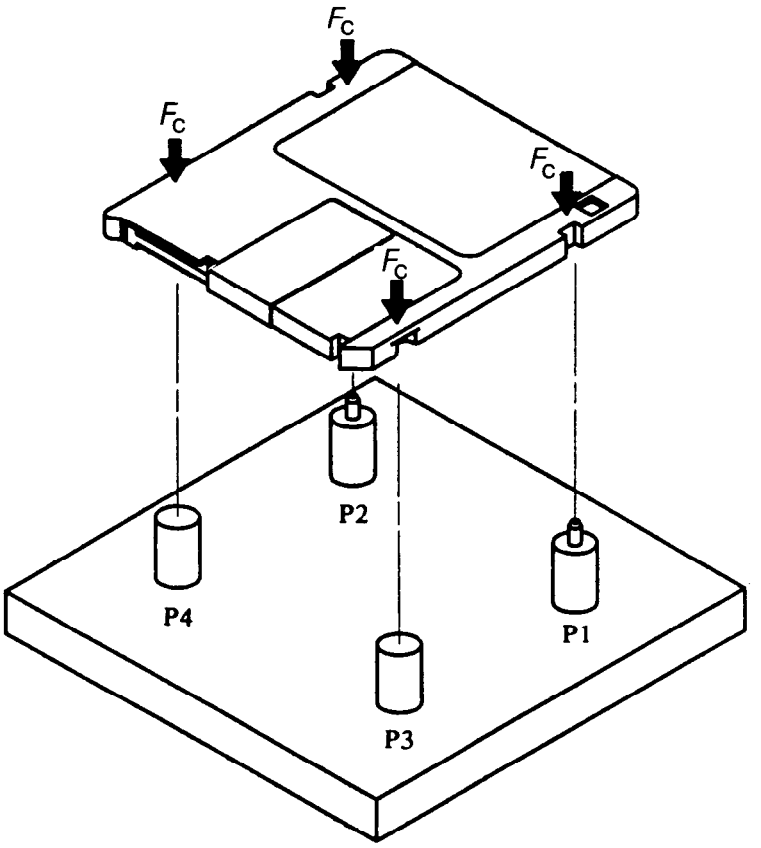

Figure B.1 - Compliance gauge

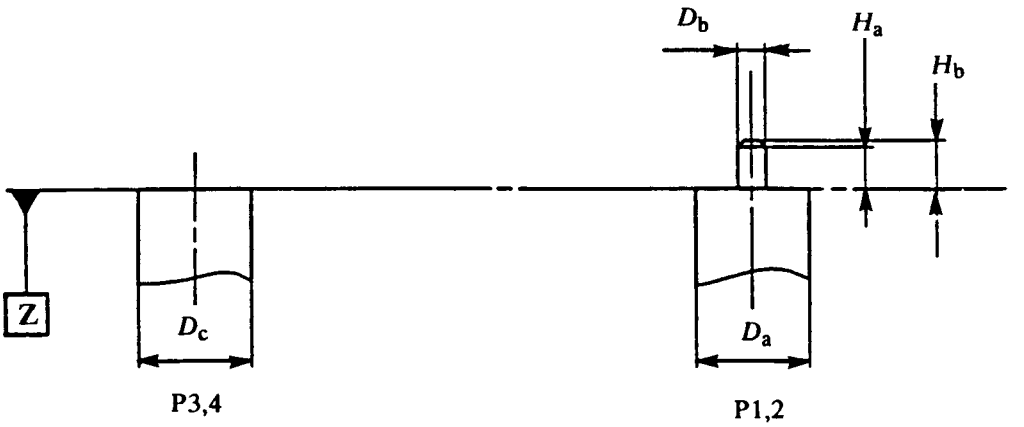

Figure B.2 - Detail of posts

Copyright International Organization for Standardization
Provided by IHS under license with ISO
No reproduction or networking permitted without license from IHS
Not for Resale

Annex C
(informative)

Track deviation measurement

The deviation of a track from its nominal location is measured in the same way as a drive sees a track, i.e. through a tracking servo. The strength of the reference servo used for the test is in general less than the strength of the same servo in a normal drive. The difference in strength is intended for margins in the drive. The deviation of the track is related to the tracking error between the track and the focus of the optical beam, remaining after the reference servo. The tracking error directly influences the performance of the drive, and is the best criterion for testing track deviations.

The specification of the axial and radial track deviations can be described in the same terms. Therefore, this annex applies to both axial and radial track deviations.

C.1 Relation between requirements

The acceleration required by the motor of the tracking servo to make the focus of the optical beam follow the tracks on the disk (see 11.4.6 and 11.4.8) is a measure for the allowed deviations of the tracks. An additional measure is the allowed tracking error between the focus and the track (see 20.2.4). The relation between both is given in figure C.1, where the maximum allowed amplitude of a sinusoidal track deviation is given as function of the frequency of the deviation. It is assumed in the figure that there is only one sinusoidal deviation present at a time.

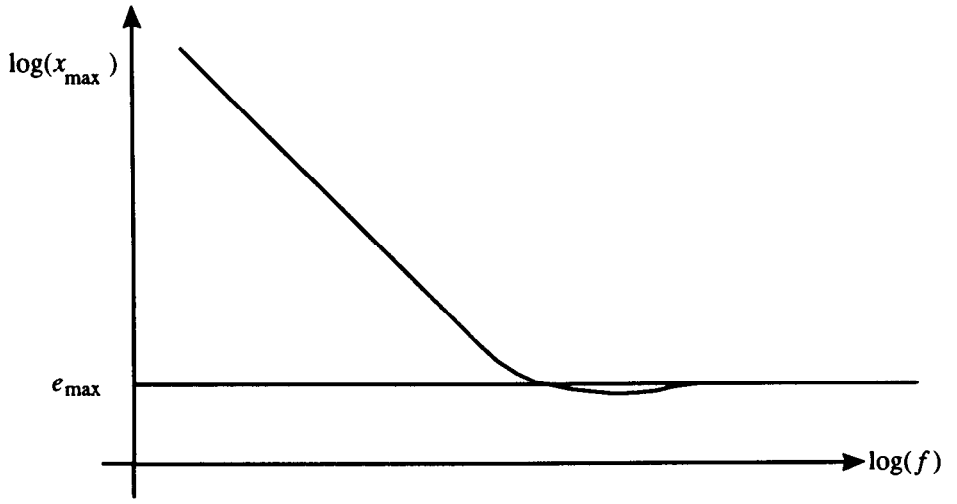

Figure C.1 - Maximum allowed amplitude of a single, sinusoidal track deviation

At low frequencies, the maximum allowed amplitude x_{max} is given by

$$x_{max} = a_{max} / (2\pi f)^2, \quad (1)$$

where a_{max} is the maximum acceleration of the servo motor. At high frequencies we have

$$x_{max} = e_{max} \quad (2)$$

where e_{max} is the maximum allowed tracking error. The connection between both frequency regions is given in C.3.

Copyright International Organization for Standardization
Provided by IHS under license with ISO
No reproduction or networking permitted without license from IHS
Not for Resale

C.2 Reference Servo

The above restriction of the track deviations is equal to the restriction of the track deviations for a Reference Servo. A Reference Servo has a well-defined transfer function, and reduces a single, sinusoidal track deviation with amplitude x_{max} to a tracking error e_{max} as in figure C.1.

The open-loop transfer function of the Reference Servo shall be

$$H_s(i\omega) = \frac{1}{c} \times \left(\frac{\omega_0}{i\omega}\right)^2 \times \frac{1 + \frac{i\omega c}{\omega_0}}{1 + \frac{i\omega}{c\omega_0}} \quad (3)$$

where $i = \sqrt{-1}$, $\omega = 2\pi f$ and $\omega_0 = 2\pi f_0$, with f_0 the 0 dB frequency of the open-loop transfer function. The constant c gives the cross-over frequencies of the lead-lag network of the servo: the lead break frequency $f_1 = f_0 / c$ and the lag break frequency $f_2 = f_0 \times c$. The reduction of a track deviation x to a tracking error e by the reference servo is given by

$$\frac{e}{x} = \frac{1}{1 + H_s} \quad (4)$$

If the 0 dB frequency is specified as

$$\omega_0 = \sqrt{\frac{a_{max} c}{e_{max}}} \quad (5)$$

then a low-frequency track deviation with an acceleration a_{max} will be reduced to a tracking error e_{max}, and a high-frequency track deviation will not be reduced. The curve in figure C.1 is given by

$$x_{max} = e_{max} \, | \, 1 + H_S \, | \quad (6)$$

The maximum acceleration required from the motor of this reference servo is

$$a_{max}(\text{motor}) = e_{max} \, \omega^2 \, | \, 1 + H_S \, | \quad (7)$$

At low frequencies ($f < f_0 / c$) applies

$$a_{max}(\text{motor}) = a_{max}(\text{track}) = \frac{\omega_0^2 e_{max}}{c} \quad (8)$$

Hence, it is permitted to use a_{max}(motor) as specified for low frequencies in 11.4.6 and 11.4.8 for the calculation of ω_0 of a reference servo.

C.3 Requirement for track deviations

The track deviations shall be such that, when tracking with a Reference Servo on a disk rotating at the specified frequency, the tracking error shall not be larger than e_{max} during more than 12 µs.

The open-loop transfer function of the Reference Servo for axial and radial tracking shall be given by equation (3) within an accuracy such that $|1 + H|$ does not differ by more than ± 20 % from its nominal value in a bandwidth from 30 Hz to 100 kHz. The constant c shall be 3. The 0 dB frequency $\omega_0 / (2\pi)$ shall be given by equation (5), where a_{max} and e_{max} for axial and radial tracking are specified in 20.2.4, 11.4.6 and 11.4.8.

Copyright International Organization for Standardization
Provided by IHS under license with ISO
No reproduction or networking permitted without license from IHS
Not for Resale

C.4 Measurement implementation

Three possible implementations for an axial or radial measurement system have been given below. H_a is the open-loop transfer function of the actual tracking servo of the drive, H_s is the transfer function for the Reference Servo as given in equation (3). x and y are the position of the track and the focus of the optical beam. e_s is the tracking error after a Reference Servo, which signal has to be checked according to the previous paragraph.

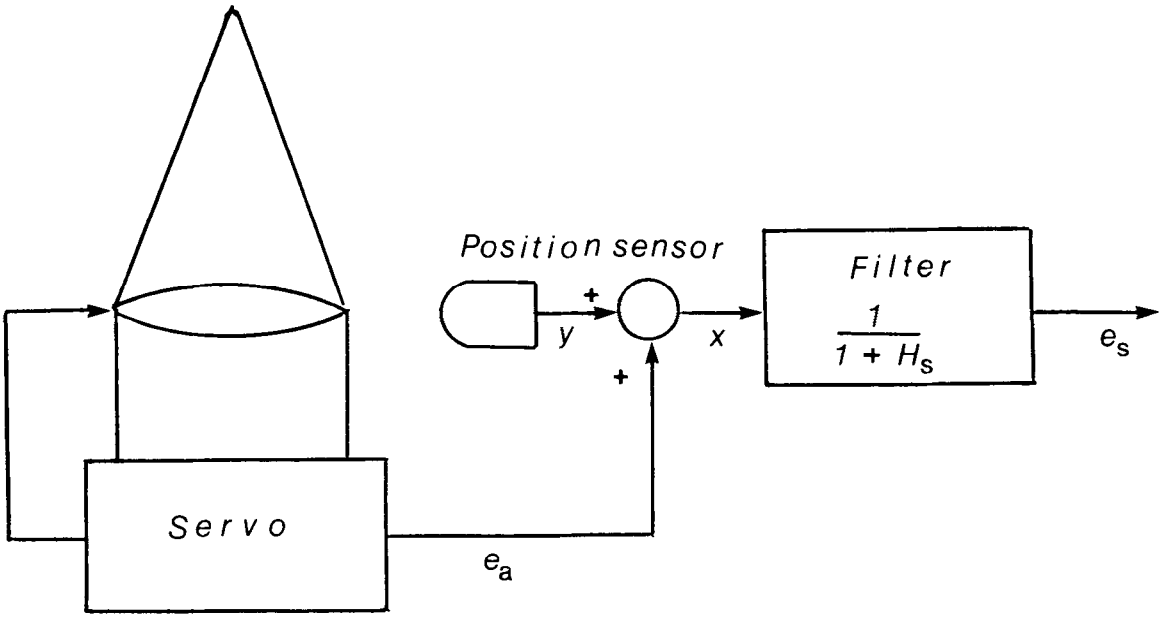

Figure C.2 - Implementation of a Reference Servo by filtering the track position signal with the reduction characteristics of the Reference Servo

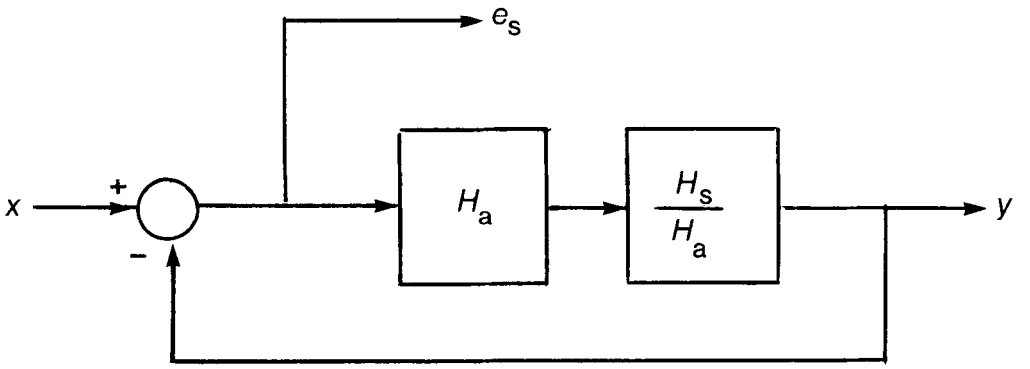

Figure C.3 - Implementation of a Reference Servo by changing the transfer function of the actual servo

Copyright International Organization for Standardization
Provided by IHS under license with ISO
No reproduction or networking permitted without license from IHS
Not for Resale

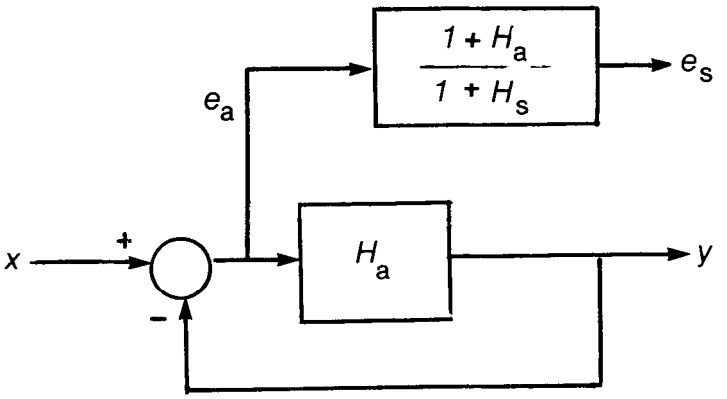

Figure C.4 - Implementation of a Reference Servo by changing the tracking error of the actual servo

The optimum implementation depends on the characteristics of H_a and H_S. Good results for motors in leaf springs are often obtained by using separate circuits in a low and high frequency channel. The implementation of figure C.2 is used in the low-frequency channel, while that of figures C.3 or C.4 is used in the high-frequency channel. The signals from both channels are added with a reversed cross-over filter to get the required tracking error. In the low-frequency channel one can also use the current through the motor as a measure of the acceleration of the motor, provided the latter is free from hysteresis. The current must be corrected for the transfer function of the motor and then be converted to a tracking error with a filter with a transfer function $e/a = e/(x\omega^2)$, derived from equation (4).

Copyright International Organization for Standardization
Provided by IHS under license with ISO
No reproduction or networking permitted without license from IHS
Not for Resale

Annex D
(normative)

CRC for ID fields

The 16 check bits of the CRC of the ID field shall be computed over the first three bytes of this field. The generator polynomial shall be

$$G(x) = x^{16} + x^{12} + x^5 + 1$$

The residual polynomial is defined by

$$R(x) = \left(\sum_{i=8}^{i=23} \bar{b}_i x^i + \sum_{i=0}^{i=7} b_i x^i \right) x^{16} \bmod G(x)$$

where b_i denotes a bit of the first three bytes and $\overline{b_i}$ an inverted bit. Bit b_{23} is the highest order bit of the first byte.

The contents of the 16 check bits c_k of the CRC are defined by

$$R_c(x) = \sum_{k=0}^{k=15} c_k x^k$$

c_{15} is recorded in the highest order bit of the fourth byte in the ID field.

Copyright International Organization for Standardization
Provided by IHS under license with ISO
No reproduction or networking permitted without license from IHS
Not for Resale

Annex E

(normative)

Format of the Data field of a sector

E.1 Contents of Data field

The bytes in the Data field constitute an ordered sequence A_n. The elements of A_n are, depending on the value of n:

$1 \le n \le 512$: $A_n = D_n$	user data bytes
$513 \le n \le 516$: $A_n = F_m$	bytes with non-specified content
$517 \le n \le 520$: $A_n = C_k$	CRC check bytes
$521 \le n \le 600$: $A_n = E_{st}$	ECC check bytes,

where

$m = n - 512$

$k = n - 516$

$s = [(n - 521) \bmod 5] + 1$

$$t = \text{int}\left[\frac{n-521}{5}\right] + 1$$

The notation int[x] denotes the largest integer not greater than x; (x mod y) denotes the remainder of the integer division x/y.

The order of the user data bytes D_n is the same as the order in which they are input into the controller of the drive, i.e. D_1 comes first. The Resync bytes are not included in A_n.

E.2 Interleaving

Before the ECC and CRC bytes are calculated, the bytes in the Data field are five-way interleaved. For that purpose, the first three sub-groups of A_n are mapped onto a two-dimensional matrix B_{ij} with 104 rows and 5 columns (see table E.1). Thus

for $1 \le n \le 520$: $B_{ij} = A_n$,

where

$$i = 103 - \text{int}\left[\frac{n-1}{5}\right]$$

$j = (n - 1) \bmod 5$

E.3 CRC and ECC

E.3.1 General

The CRC and ECC shall be computed over the Galois field based on the primitive polynomial

$$G_p(x) = x^8 + x^5 + x^3 + x^2 + 1$$

Copyright International Organization for Standardization
Provided by IHS under license with ISO
No reproduction or networking permitted without license from IHS
Not for Resale

The elements of the field are $\alpha^i = (\beta^i)^{88}$, where β is a primitive root of $G_p(x)$. The value of the n-th bit in a byte is the coefficient of the n-th power of β, where $0 \le n \le 7$, when β is expressed on a polynomial basis.

E.3.2 CRC

The generator polynomial for the CRC bytes shall be

$$G_c(x) = \sum_{i=136}^{i=139} \left(x + \alpha^i\right)$$

The four check bytes of the CRC shall be computed over the user data and the four F_m bytes. The information polynomial shall be

$$I_c(x) = \left[\sum_{i=1}^{i=103} \sum_{j=0}^{j=4} B_{ij}\, x^i \right] + B_{0,0}\, x^0$$

The contents of the four check bytes C_k of the CRC are defined by the residual polynomial

$$R_c(x) = I_c(x)\, x^4 \bmod G_c(x)$$

The storage locations for the coefficients of the polynomial are specified by

$$R_c(x) = \sum_{k=1}^{k=4} C_k x^{4-k}$$

E.3.3 ECC

The primitive polynomial and the elements shall be as specified in E.3.1. The generator polynomial for the check bytes of the ECC shall be

$$G_e(x) = \sum_{i=120}^{i=135} \left(x + \alpha^i\right)$$

The 80 check bytes of the ECC shall be computed over the user data, the four F_m bytes and the four CRC bytes. The corresponding five information polynomials shall be

$$I_{ej}(x) = \sum_{i=0}^{i=103} B_{ij} x^i$$

where $0 \le j \le 4$

The contents of the 16 check bytes E_{sl} for each polynomial $I_{ej}(x)$ are defined by the five residual polynomials

$$R_{ej}(x) = I_{ej}(x)\, x^{16} \bmod G_e(x)$$

The storage locations for the coefficients of the polynomials are specified by

$$R_{ej}(x) = \sum_{t=1}^{t=16} \overline{E}_{(j+1),t}\, x^{16-t}$$

The bits of the computed check bytes shall be inverted before they are encoded into Channel bits, as indicated by the use of $\overline{E}$ in the above formula and E in table E.1.

Copyright International Organization for Standardization
Provided by IHS under license with ISO
No reproduction or networking permitted without license from IHS
Not for Resale

E.4 Resync

The Resync fields shall be inserted in the Data field to prevent loss of byte synchronization and to limit the propagation of errors in the user data. Whilst they are numbered consecutively, all Resync fields are identical. They contain the following pattern in Channel bits which does not occur in user data

0010 0000 0010 0100 .

The Resync field RS_n shall be inserted between bytes A_{15n} and A_{15n+1}, where $1 \leq n \leq 39$.

E.5 Recording Sequence

The bytes of the Data field shall be recorded on the disk immediately after the Sync field. Their order shall be according to the sequence A_n with the Resync bytes inserted as specified in E.4.

Table E.1 shows in matrix form the arrangement of the bytes. The sequence of recording is from left to right and top to bottom. The first three bytes SB_1, SB_2 and SB_3 form the Data Sync field, which precedes the Data field. The first 104 rows of the Data field contain user data and a few bytes with unspecified contents and CRC data. The last 16 rows contain the ECC check bytes.

Copyright International Organization for Standardization
Provided by IHS under license with ISO
No reproduction or networking permitted without license from IHS
Not for Resale

Table E.1 - Data field configuration. The indices *i* and *j* of bytes B_{ij} are given along the sides of the matrix

Column No. *j* →				0	1	2	3	4	Row No. *i* ↑
	SB1	SB2	SB3	D1	D2	D3	D4	D5	103
				D6	D7	D8	D9	D10	102
				D11	D12	D13	D14	D15	101
			RS1	D16	D17	D18	D19	D20	100
				D21	D22	D23	D24	D25	99
				D26	D27	D28	D29	D30	98
			RS2	D31	D32	D33	D34	D35	97
				⋮				⋮	
104 rows			RS33	D496	D497	D498	D499	D500	4
				D501	D502	D503	D504	D505	3
				D506	D507	D508	D509	D510	2
			RS34	D511	D512	F1	F2	F3	1
				F4	C1	C2	C3	C4	0
				E1,1	E2,1	E3,1	E4,1	E5,1	-1
			RS35	E1,2	E2,2	E3,2	E4,2	E5,2	-2
				E1,3	E2,3	E3,3	E4,3	E5,3	-3
16 rows				⋮				⋮	
			RS39	E1,14	E2,14	E3,14	E4,14	E5,14	-14
				E1,15	E2,15	E3,15	E4,15	E5,15	-15
				E1,16	E2,16	E3,16	E4,16	E5,16	-16

Copyright International Organization for Standardization
Provided by IHS under license with ISO
No reproduction or networking permitted without license from IHS
Not for Resale

Annex F
(normative)

Contents of the Control Zones

Each sector in the two Control Zones shall contain the same Control data provided by the manufacturer of the media. The Control data is divided into four groups in the following way.

1) The media characterization data gives a general characterization of the disk. It specifies the type of disk, the ECC, the tracking method, etc. The data is recorded in bytes 0 to 17. Bytes 0 to 9, 12 and 13 are mandatory for all media, bytes 10 and 11 are mandatory for rewritable and partially embossed media only.

2) The Recording Control data specifies the settings of the drive for reading, writing and erasing. Space is allocated for the following sets of data:

   - three wavelengths L_1, L_2 and L_3,
   - for each wavelength the reflectance R of the disk,
   - for each wavelength four rotational frequencies N_1, N_2, N_3 and N_4
   - for each value of N:
     . the maximum read power
     . one set of erase conditions
     . four sets of write conditions: viz. three sets for constant pulse width and one set for constant pulse power (each set may contain three values for the inner, middle and outer radius of the Information Zone).

   The Recording Control data can be divided in two sub-groups, one for the conformance tests described in clauses 18 to 27, and one for control of user drives.

a) The conformance test data specifies the settings for the Reference Drive. They can also be used as reference data for user drives. The conformance test data shall be recorded in bytes 18 to 34, 44 to 47, 132 to 148 and 158 to 161, and are mandatory for rewritable and partially embossed media.

b) The User reference data contains the recommendation of the media manufacturer for the settings of a user drive for operating the disk in the test environment. This data is recorded in bytes 48 to 131, and 162 to 359, and is optional, except in those bytes listed in c).

c) The following bytes are reserved for future standardization and shall be set to (FF):

35 to 43	198 to 200
56 to 58	226 to 228
84 to 86	263 to 271
112 to 114	284 to 286
149 to 157	312 to 314
170 to 172	340 to 342

3) The System data gives the characteristics of an Embossed Zone on the disk. The data shall be recorded in bytes 380 to 383, and is mandatory for partially and fully embossed media. Bytes 400 to 428 are mandatory for all types of media.

4) The last group contains unspecified data, recorded in bytes 480 to 511.

Optional bytes shall either contain the prescribed data or shall be set to (FF).

Copyright International Organization for Standardization
Provided by IHS under license with ISO
No reproduction or networking permitted without license from IHS
Not for Resale

F.1 Media characterization data

Byte 0: Format Descriptor 1

This byte shall be set to 00000000, indicating Continuous Composite Servo tracking, Constant Angular Velocity of the disk, (2,7) RLL mark position Recording code.

Byte 1: Format Descriptor 2

This byte shall be set to 00010001, indicating Reed-Solomon Long Distance Error Correction Code of degree 16 with a 5-way interleave, 512 bytes user data per sector.

Byte 2: Sectors per track

This byte shall be set to 00011001, indicating 25 sectors per track.

Byte 3: Reflectance

This byte shall specify the disk manufacturer's specification of the reflectance R of the disk, expressed as a fraction, when measured at a nominal wavelength of 825 nm. It is specified as a number n such that

$n = 100\,R$

Byte 4: On-land or in-groove recording

This byte shall be set to 00000000, indicating on-land recording.

Byte 5: Reserved

This byte shall be set to (FF).

Byte 6: Maximum read power

This byte shall specify the lowest of the values specified in Bytes 21, 135 and 249 of the Control Zones. It specifies the maximum read power P_w, in milliwatts, permitted for reading the Control Zones. It is specified as a number n such that

$n = 20\,P_w$

Byte 7: Media type

The allowed settings of this byte shall be

0000 0000: indicates fully embossed media
0010 0000: indicates fully rewritable media, M.O.
1010 0000: indicates rewritable media, M.O., with partially embossed data

Other settings of this byte are prohibited by this International Standard, they are reserved for future standardization.

Bytes 8, 9: Last track in the Data Zone

These bytes shall be set to 00100111 and 00001111, respectively, indicating the MSB, LSB of the track number of the last track in the Data Zone, viz. 9999.

Byte 10: Polarity of the figure of merit

This byte shall be set to 00000001, indicating that the polarity is negative.

Byte 11: Magnitude of the figure of merit

This byte shall indicate the magnitude of the figure of merit F, specified as a number n, such that

$n = 10000\,F$

Bytes 12,13: Reserved

Copyright International Organization for Standardization
Provided by IHS under license with ISO
No reproduction or networking permitted without license from IHS
Not for Resale

These bytes shall be set to (FF).

Bytes 14 to 17: Unspecified

These bytes may be used for manufacturer identification. They shall be ignored in interchange.

F.2 Recording control data

Byte 18: Wavelength

This byte shall specify the wavelength L_1, in nanometres, of the drive as a number n such that

$n = 1/5\ L_1$.

This byte shall be set to $n = 165$.

Byte 19: Reflectance

This byte shall specify the reflectance R_1 of the disk measured at wavelength L_1 as a number n such that

$n = 100\ R_1$.

The value of n shall be equal to that recorded in byte 3.

Byte 20: Rotational frequency

This byte shall specify the rotational frequency N_1 in hertz of the disk as a number n such that

$n = N_1$.

This byte shall be set to $n = 30$.

Byte 21: Maximum read power

This byte shall specify the maximum read power P_1, in milliwatts, in the Information Zone under condition L_1 and N_1, expressed as a number n such that

$n = 20\ P_1$

where $24 \leq n \leq 26$

Bytes 22 to 30: Write power at constant pulse width

Bytes 22 to 30 shall specify the write powers P_w, in milliwatts, for three values of a pulse width T_p, under condition L_1 and N_1, where T is the period of one Channel bit. P_w is expressed as a number n such that

$n = 5\ P$w.

Byte 22 Write power at $T_p = 1{,}00\ T$ ns and $r = 24$ mm
Byte 23 Write power at $T_p = 1{,}00\ T$ ns and $r = 30$ mm
Byte 24 Write power at $T_p = 1{,}00\ T$ ns and $r = 40$ mm

Byte 25 Write power at $T_p = 0{,}50\ T$ ns and $r = 24$ mm
Byte 26 Write power at $T_p = 0{,}50\ T$ ns and $r = 30$ mm
Byte 27 Write power at $T_p = 0{,}50\ T$ ns and $r = 40$ mm

Byte 28 Write power at $T_p = 0{,}25\ T$ ns and $r = 24$ mm
Byte 29 Write power at $T_p = 0{,}25\ T$ ns and $r = 30$ mm
Byte 30 Write power at $T_p = 0{,}25\ T$ ns and $r = 40$ mm

Bytes 31 to 34: Write pulse width at constant write power

Bytes 31 to 34 shall specify the write pulse width T_p, in nanoseconds, at a write power P_w under condition L_1 and N_1. T_p is expressed as a number n such that

Copyright International Organization for Standardization
Provided by IHS under license with ISO
No reproduction or networking permitted without license from IHS
Not for Resale

$n = T_p$

Byte 31 Write power
Byte 32 Write pulse width at $r = 24$ mm
Byte 33 Write pulse width at $r = 30$ mm
Byte 34 Write pulse width at $r = 40$ mm

Bytes 35 to 43: Reserved

These bytes shall be set to (FF).

Bytes 44 to 47: D.c. erase power

Byte 44 shall be set to (00). Bytes 45 to 47 shall then specify erase powers P_e, in milliwatts, for a d.c. erase at three radii, under condition L_1 and N_1. P_e is expressed in the same way as P_w in bytes 22 to 30.

Byte 45 Erase power at $r = 24$ mm
Byte 46 Erase power at $r = 30$ mm
Byte 47 Erase power at $r = 40$ mm

Byte 48: Rotational frequency

This byte shall specify the rotational frequency N_2, in hertz, of the disk, expressed in the same way as N_1 in byte 20.

If this byte is not set to (FF), n shall be set to 40.

Bytes 49 to 75

These bytes shall specify the same parameters as in bytes 21 to 47, but under the condition L_1 and N_2, except bytes 56 to 58 which shall be set to (FF).

Byte 76: Rotational frequency

This byte shall specify the rotational frequency N_3, in hertz, of the disk, expressed in the same way as N_1 in byte 20.

If this byte is not set to (FF), n shall be set to 60.

Bytes 77 to 103

These bytes shall specify the same parameters as in bytes 21 to 47, but under the condition L_1 and N_3, except bytes 84 to 86 which shall be set to (FF).

Byte 104: Rotational frequency

This byte shall specify the rotational frequency N_4, in hertz, of the disk, expressed in the same way as N_1 in byte 20.

If this byte is not set to (FF), n shall have a value other than 30, 40 or 60.

Bytes 105 to 131

These bytes shall specify the same parameters as in bytes 21 to 47, but under the condition L_1 and N_4, except bytes 112 to 114 which shall be set to (FF).

Byte 132: Wavelength

This byte shall specify the wavelength L_2 of the drive, in nanometres, as a number n such that

$n = 1/5\ L_2$

This byte shall be set to $n = 156$

Byte 133: Reflectance

This byte shall specify the reflectance R_2 of the disk measured at wavelength L_2 as a number n such that

$n = 100\ R_2$

Copyright International Organization for Standardization
Provided by IHS under license with ISO
No reproduction or networking permitted without license from IHS
Not for Resale

Byte 134: Rotational frequency

This bytes shall specify the rotational frequency N_1 of the disk, in hertz, as a number n such that

$n = N_1$

This byte shall be set to $n = 30$.

Byte 135: Maximum read power

This byte shall specify the maximum read power P_2 in the Information Zone, in milliwatts, under condition L_2 and N_1, expressed as a number n such that

$n = 20\ P_2$

where $24 \leq n \leq 26$

Bytes 136 to 144: Write power at constant pulse width

These bytes shall specify the write powers P_w in milliwatts for three values of a pulse width T_p, under condition L_2 and N_1 for three radii, where T is the period of one Channel bit. P_w is expressed as number n such that

$n = 5\ P_w$

Byte 136 Write power at $T_p = 1{,}00\ T$ ns and $r = 24$ mm
Byte 137 Write power at $T_p = 1{,}00\ T$ ns and $r = 30$ mm
Byte 138 Write power at $T_p = 1{,}00\ T$ ns and $r = 40$ mm

Byte 139 Write power at $T_p = 0{,}50\ T$ ns and $r = 24$ mm
Byte 140 Write power at $T_p = 0{,}50\ T$ ns and $r = 30$ mm
Byte 141 Write power at $T_p = 0{,}50\ T$ ns and $r = 40$ mm

Byte 142 Write power at $T_p = 0{,}25\ T$ ns and $r = 24$ mm
Byte 143 Write power at $T_p = 0{,}25\ T$ ns and $r = 30$ mm
Byte 144 Write power at $T_p = 0{,}25\ T$ ns and $r = 40$ mm

Bytes 145 to 148: Write pulse width at constant write power

These bytes shall specify the write pulse width T_p, in nanoseconds, at a write power P_w under condition L_2 and N_1 for three radii. T_p is expressed as a number n such that

$n = T_p$

P_w is expressed in the same way as in bytes 136 to 144.

Byte 145 Write power
Byte 146 Write pulse width at $r = 24$ mm
Byte 147 Write pulse width at $r = 30$ mm
Byte 148 Write pulse width at $r = 40$ mm

Bytes 149 to 157: Reserved

These bytes shall be set to (FF).

Bytes 158 to 161: D.c. erase power

Byte 158 shall be set to (00). Bytes 159 to 161 shall then specify erase powers P_e, in milliwatts, for a d.c. erase at three radii, under condition L_2 and N_1. P_e is expressed in the same way as P_w in bytes 136 to 144.

Byte 159 Erase power at $r = 24$ mm
Byte 160 Erase power at $r = 30$ mm
Byte 161 Erase power at $r = 40$ mm

Copyright International Organization for Standardization
Provided by IHS under license with ISO
No reproduction or networking permitted without license from IHS
Not for Resale

Byte 162: Rotational frequency

This byte shall specify the rotational frequency N_2 of the disk, in hertz , expressed in the same way as N_1 in byte 134.

If this byte is not set to (FF), n shall be set to 40.

Bytes 163 to 189

These bytes shall specify the same parameters as in bytes 135 to 161, but under the condition L_2 and N_2, except bytes 170 to 172 which shall be set to (FF).

Byte 190: Rotational frequency

This byte shall specify the rotational frequency N_3 of the disk, in hertz , expressed in the same way as N_1 in byte 134.

If this byte is not set to (FF), n shall be set to 60.

Bytes 191 to 217

These bytes shall specify the same parameters as in bytes 135 to 161, but under the condition L_2 and N_3, except bytes 198 to 200 which shall be set to (FF).

Byte 218: Rotational frequency

This byte shall specify the rotational frequency N_4 of the disk, in hertz , expressed in the same way as N_1 in byte 134.

If this byte is not set to (FF), n shall have a value other than 30, 40 or 60.

Bytes 219 to 245

These bytes shall specify the same parameters as in bytes 135 to 161, but under the condition L_2 and N_4, except bytes 226 to 228 which shall be set to (FF).

Byte 246: Wavelength

This byte shall specify the wavelength L_3 of the drive, in nanometres, expressed in the same way as L_2 in byte 132.

Bytes 247 to 359

These bytes shall specify the same parameters as in bytes 133 to 245, but under the condition L_3, except bytes 263 to 271, 284 to 286, 312 to 314 and 340 to 342 which shall be set to (FF). Bytes 256 to 258 are optional.

Bytes 360 to 379: Reserved

These bytes shall be set to (FF).

Summary of recording control data

Table F.1 summarizes the requirements for bytes 18 to 359. In this table:

- large, bold numbers are those of the mandatory bytes, see 2a);
- large, italic, shaded numbers are those of the bytes which shall always be set to (FF), see 2c);
- smaller, normally printed numbers are those of the bytes the content of which is optional. These bytes shall either contain the value specified for them in F.1 or be set to (FF), see 2b).

F.3 System data

Bytes 380 and 381: First track of the Embossed Zone

If a disk has an Embossed Zone, these bytes shall specify the MSB, LSB of the track number of the first track of this Zone (see table 5), else they shall be set to (FF).

Copyright International Organization for Standardization
Provided by IHS under license with ISO
No reproduction or networking permitted without license from IHS
Not for Resale

Bytes 382 and 383: Last track of the Embossed Zone

If a disk has an Embossed Zone, these bytes shall specify the MSB, LSB of the track number of the last track of this Zone (see table 5), else they shall be set to (FF).

Bytes 384 to 399: Reserved

These bytes shall be set to (FF).

Bytes 400 to 428: Control bytes for partially embossed disks

This information is required for partially embossed disks and contains parameter values for bytes 0 to 28 of the DDS. These control bytes shall be defined by the manufacturer at the time the disk is manufactured. Bytes 421 to 428, which represent addresses of the PDL and SDL, shall be set to (FF). The control bytes can be used by the user as input to the format process and to recover the contents of the DDS if lost through machine error or if inadvertently overwritten. For fully rewritable and fully embossed disks, these bytes shall be set to (FF).

Bytes 429 to 479: Reserved.

These bytes shall be set to (FF).

F.4 Unspecified data

Bytes 480 to 511

The contents of these bytes are not specified in this International Standard. They may contain an identification of the manufacturer. They shall be ignored in interchange.

Copyright International Organization for Standardization
Provided by IHS under license with ISO
No reproduction or networking permitted without license from IHS
Not for Resale

Table F.1 - Summary of recording control data

L1 N1	L1 N2	L1 N3	L1 N4	L2 N1	L2 N2	L2 N3	L2 N4	L3 N1	L3 N2	L3 N3	L3 N4
18				132				246			
19				133				247			
20	48	76	104	134	162	190	218	248	276	304	332
21	49	77	105	135	163	191	219	249	277	305	333
22	50	78	106	136	164	192	220	250	278	306	334
23	51	79	107	137	165	193	221	251	279	307	335
24	52	80	108	138	166	194	222	252	280	308	336
25	53	81	109	139	167	195	223	253	281	309	337
26	54	82	110	140	168	196	224	254	282	310	338
27	55	83	111	141	169	197	225	255	283	311	339
28	*56*	*84*	*112*	142	*170*	*198*	*226*	256	*284*	*312*	*340*
29	*57*	*85*	*113*	143	*171*	*199*	*227*	257	*285*	*313*	*341*
30	*58*	*86*	*114*	144	*172*	*200*	*228*	258	*286*	*314*	*342*
31	59	87	115	145	173	201	229	259	287	315	343
32	60	88	116	146	174	202	230	260	288	316	344
33	61	89	117	147	175	203	231	261	289	317	345
34	62	90	118	148	176	204	232	262	290	318	346
35	63	91	119	*149*	177	205	233	*263*	291	319	347
36	64	92	120	*150*	178	206	234	*264*	292	320	348
37	65	93	121	*151*	179	207	235	*265*	293	321	349
38	66	94	122	*152*	180	208	236	*266*	294	322	350
39	67	95	123	*153*	181	209	237	*267*	295	323	351
40	68	96	124	*154*	182	210	238	*268*	296	324	352
41	69	97	125	*155*	183	211	239	*269*	297	325	353
42	70	98	126	*156*	184	212	240	*270*	298	326	354
43	71	99	127	*157*	185	213	241	*271*	299	327	355
44	72	100	128	158	186	214	242	272	300	328	356
45	73	101	129	159	187	215	243	273	301	329	357
46	74	102	130	160	188	216	244	274	302	330	358
47	75	103	131	161	189	217	245	275	303	331	359

Mandatory: Bytes set to (FF)

Mandatory

Not mandatory

See F.1 for the specification of the content of each byte.

Copyright International Organization for Standardization
Provided by IHS under license with ISO
No reproduction or networking permitted without license from IHS
Not for Resale

Annex G
(informative)

Guidelines for sector replacement

Clause 19 assumes that a sector is defective and will be replaced by the defect management, for instance when any of the following conditions exist:

a) a sector has two or three ID fields with each an error as detected by the CRC check;

b) the Sector Mark cannot be recognized;

c) a column in the Data field (see table E.1) contains more than three defective bytes A_n.

Annex H
(normative)

Measurement of the figure of merit

H.1 The figure of merit enables a drive designer to determine the amplitude of the signal in Channel 2 of the drive from magneto-optical marks recorded on the disk at a low spatial frequency in both the radial and tangential direction.

Determination of the figure of merit using a drive as the Reference Drive specified in clause 9 will not measure media properties only but also the optical retardation of the optical system of the drive. Therefore, a calibration of the drive is needed with a conventional determination of the figure of merit by measuring the reflectance, Kerr rotation and ellipticity. This calibration can only be executed reliably on media with low coercivity.

H.2 The drive shall be calibrated as follows. A test disk with negligible birefringence, e.g. a glass disk, and a low-coercivity magneto-optical layer is used for a conventional determination of the reflectance R, the Kerr rotation θ of the polarization between both opposite states of magnetization of the layer, and the Kerr ellipticity ß. The figure of merit of the media is then

$F_L = R \sin\theta \cos 2ß$.

A low-frequency test pattern is written on the same disk. The written domains shall be substantially larger than the focal spot, so as to work in the low spatial frequency region where the modulation transfer function of the optical system is one. This implies that for a disk rotating at 30 Hz, a pattern of long domains with a frequency lower than 100 kHz has to be written on several consecutive tracks, while keeping the marks in neighbouring tracks radially aligned and overlapping.

The pattern is read with the drive to be calibrated. The resulting peak-to-peak amplitude VL of the signal in Channel 2 of the drive is the required calibration constant for this drive.

H.3 The figure of merit of any low- or high-coercivity disk can now be determined on the calibrated drive by writing the above test pattern and reading the peak-to-peak amplitude V of the signal in Channel 2. The figure of merit F of this disk is then

$$F = F_L \frac{V}{VL}$$

Copyright International Organization for Standardization
Provided by IHS under license with ISO
No reproduction or networking permitted without license from IHS
Not for Resale

Annex J
(informative)

Read power, write power and erase power

J.1 Read power

The values of P_{max} for two further rotational frequencies are defined in table J.1. The value contained in the Control Zone may not exceed these values for a specific rotational frequency.

Table J.1 - Rotational frequency and maximum read power

Rotational Frequency	Maximum Read Power P_{max}
40 Hz	1,4 mW $\leq P_{max} \leq$ 1,5 mW
60 Hz	1,8 mW $\leq P_{max} \leq$ 2,0 mW

J.2 Write power and erase power

The values of write power and erase power contained in the Control Zones are described as the values at the temperature of 23 °C only and should not exceed the values for the following two rotational frequencies as follows:

Rotational Frequency	Maximum Write Power and Maximum Erase Power	
40 Hz	$P_{w,e} = 61\left(\frac{1}{T_p} + \frac{1}{\sqrt{T_p}}\right)$ mW	$T_p \leq 72$ ns
	$P_{w,e} = 8$ mW	$T_p > 72$ ns
60 Hz	$P_{w,e} = 61\left(\frac{1}{T_p} + \frac{1}{\sqrt{T_p}}\right)$ mW	$T_p \leq 48$ ns
	$P_{w,e} = 10$ mW	$T_p > 48$ ns

where $P_{w,e}$ is the write power (P_w) or erase power (P_e) and T_p is the numeric value in nanoseconds of the write pulse width.

The write power and erase power should be compensated for the temperature of the disk according to the formula:

$$P_t = P_{23} - [0{,}03\ (T_{op} - 23)]$$

where

P_t is the compensated power,

P_{23} is the value described in the Control Zone, and

T_{op} is the numeric value in degree Centigrade (°C) of the temperature of the disk.

Copyright International Organization for Standardization
Provided by IHS under license with ISO
No reproduction or networking permitted without license from IHS
Not for Resale

Annex K
(normative)

Test method for measuring the adsorbent force of the hub

K.1 The purpose of this test is to determine the magnetic characteristic of the magnetizable material of the hub.

K.2 The test device (see figure K.1) consists of a spacer, a magnet, a back yoke and a centre shaft. The dimensions of the test device are as follows:

D_d = 7,0 mm ± 0,1 mm
D_e = 14,0 mm ± 0,1 mm
D_f = 13,0 mm max.

$D_g = 3{,}9\ \text{mm}^{+0{,}0\ \text{mm}}_{-0{,}1\ \text{mm}}$

H_c = 0,40 mm ± 0,01 mm
H_d = 1,00 mm ± 0,05 mm

K.3 The material of the test device shall be:

Magnet : Sm-Co
Back yoke : Any suitable magnetizable material
Spacer : Non-magnetizable material or air gap
Centre shaft : Non-magnetizable material

K.4 The characteristics of the magnet with back yoke are as follows:

Number of poles : 4
Maximum energy product (BH_{max}):175 kJ/m^3 ± 16 kJ/m^3

The characteristics of the magnet with back yoke shall be adjusted by the use of a pure nickel plate with the following dimensions (see figure K.2), and the adsorbent force of this plate at the point of H_c = 0,4 mm when spaced from the magnet surface shall be 3,3 N ± 0,2 N.

D_h = 6,0 mm ± 0,1 mm
D_i = 15,0 mm ± 0,1 mm
H_e = 1,00 mm ± 0,05 mm

K.5 The test condition for temperature shall be as specified in 8.1.1.

Copyright International Organization for Standardization
Provided by IHS under license with ISO
No reproduction or networking permitted without license from IHS
Not for Resale

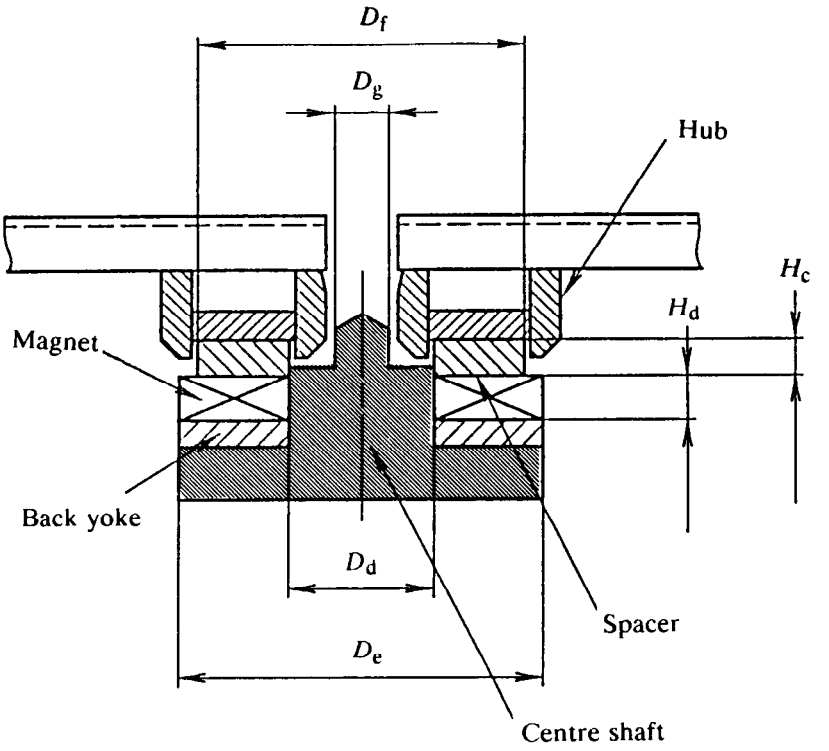

Figure K.1 - Test device for the clamping characteristic of the hub

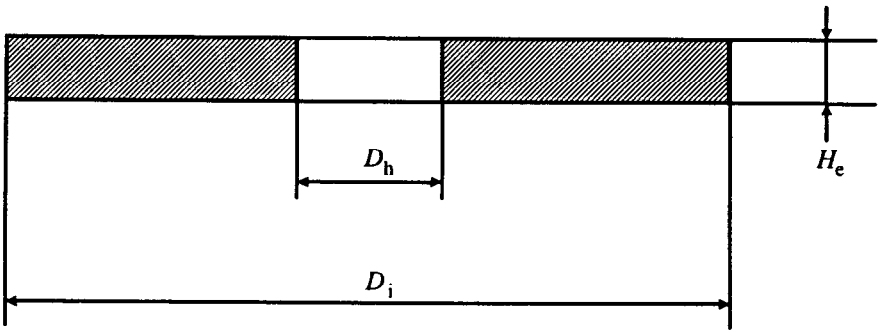

Figure K.2 - Calibration plate of the test device

Copyright International Organization for Standardization
Provided by IHS under license with ISO
No reproduction or networking permitted without license from IHS
Not for Resale

Annex L
(informative)

Derivation of the operating climatic environment

This annex gives some background on how some of the conditions of the operating environment in clause 8.1.2 have been derived.

L.1 Standard climatic environment classes

The conditions of the ODC operating environment are, with a few exceptions mentioned below, based on parameter values of the IEC standard climatic environment class 3K3 described in IEC publication 721-3-3:1987 [1]. This publication defines environmental classes for stationary use of equipment at weather-protected locations.

The IEC class 3K3 refers to climatic conditions which

"... may be found in normal living or working areas, e.g. living rooms, rooms for general use (theatres, restaurants, etc.), offices, shops, workshops for electronic assemblies and other electrotechnical products, telecommunication centres, storage rooms for valuable and sensitive products."

L.2 Overtemperature considerations

While IEC class 3K3 defines the limits for the room climate only, the ODC operating environment specification in this International Standard takes into consideration also system and drive overtemperature. This means that when inserted in a drive, the ODC will sense a temperature which is above the ambient room temperature. The figures in the operating environment specification have been calculated from the assumption that this overtemperature may be up to 20 °C.

L.3 Absolute humidity

The introduction of the parameter

absolute humidity [unit: g water / m^3 of air]

is very useful when studying overtemperature. When the temperature rises inside a drive, the relative humidity goes down but the absolute humidity remains substantially constant. So, making room for overtemperature in the operating environment specification affects not only the upper temperature limit but also the lower relative humidity limit. The relationship between these parameters is shown in the climatogram (the relative humidity versus temperature map) of the ODC operating environment, figure L.1.

The absolute humidity restrictions influence the operating environment in the following two ways:

a) Combinations of high temperatures and high relative humidities are excluded. Such combinations could have negative influence on the performance and the life of ODCs.

b) Combinations of low temperatures and low relative humidities are excluded. Such combinations are very unlikely to occur in worldwide normal office environments.

[1] *Classification of environmental conditions - Part 3: Classification of groups of environmental parameters and their severities. Stationary use at weatherprotected locations.*

--`,,```,,,,````-`-`,,`,,`,`,,`---

Copyright International Organization for Standardization
Provided by IHS under license with ISO
No reproduction or networking permitted without license from IHS Not for Resale

L.4 Deviations from the IEC standard environment class

Apart from the changes introduced by the overtemperature considerations mentioned above, there are a few more parameter values which are not based on IEC class 3K3. These are:

- Atmospheric pressure

The IEC 3K3 lower limit of 70 kPa has been extended to 60 kPa. ODCs show no intrinsic pressure sensitivity and 70 kPa excludes some possible markets for ODCs.

- Absolute humidity

The IEC 3K3 value for the upper limit of 25 g/m^3 has been raised to 30 g/m^3 in view of some expected operation in portable devices outside the controlled office environment.

- Temperature

The maximum temperature around the ODC, i.e. room temperature plus overtemperature, has been limited to 50 °C (while IEC 3K3 + 20 °C would have become 60 °C). For ODCs according to this International Standard, however, the 50 °C limit is considered to be a physical limit above which operation (as well as storage) is not safe.

This means that equipment designers may want to ensure adequate cooling inside the drive especially when the room temperature approaches the upper IEC 3K3 limit of 40 °C.

- Further

The rates of change (the gradients) of temperature and relative humidity are not according to IEC 3K3.

L.5 Wet bulb temperature specifications

Instead of specifying limits for the absolute humidity, earlier standards for ODCs as well as those for other digital data storage media often used restrictions of the parameter

wet bulb temperature [unit: °C]

in order to avoid too severe combinations of high temperatures and high relative humidities.

In order to facilitate comparisons between different specifications, figure L.2 shows wet bulb temperatures of interest for the ODC operating environment, as well as for the testing and storage environments. Since wet bulb temperatures vary slightly with the atmospheric pressure, the diagram is valid for the normal pressure of 101,3 kPa.

Copyright International Organization for Standardization
Provided by IHS under license with ISO
No reproduction or networking permitted without license from IHS
Not for Resale

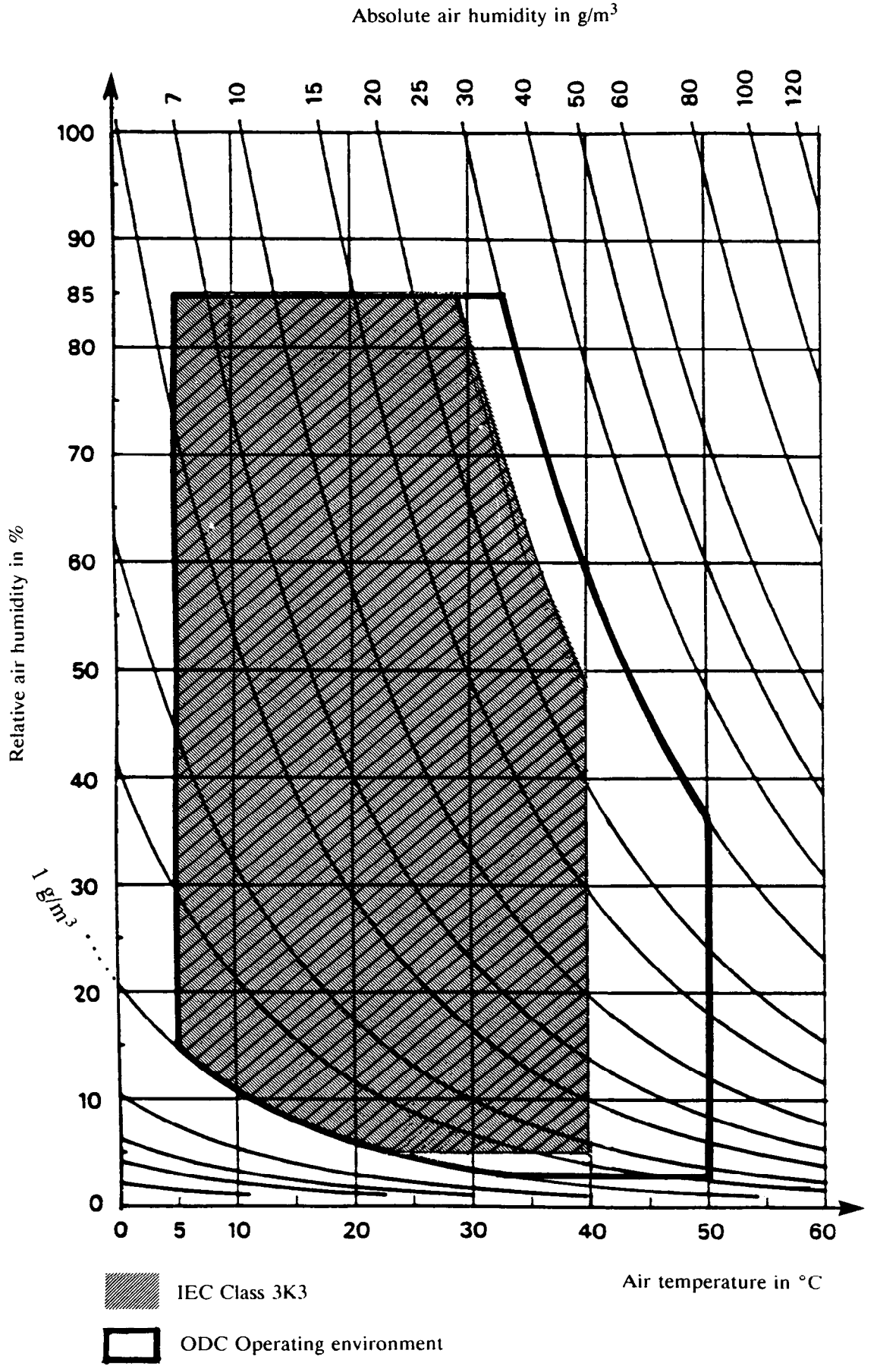

Figure L.1 - Climatogram of IEC Class 3K3 and the ODC operating environment

Copyright International Organization for Standardization
Provided by IHS under license with ISO
No reproduction or networking permitted without license from IHS
Not for Resale

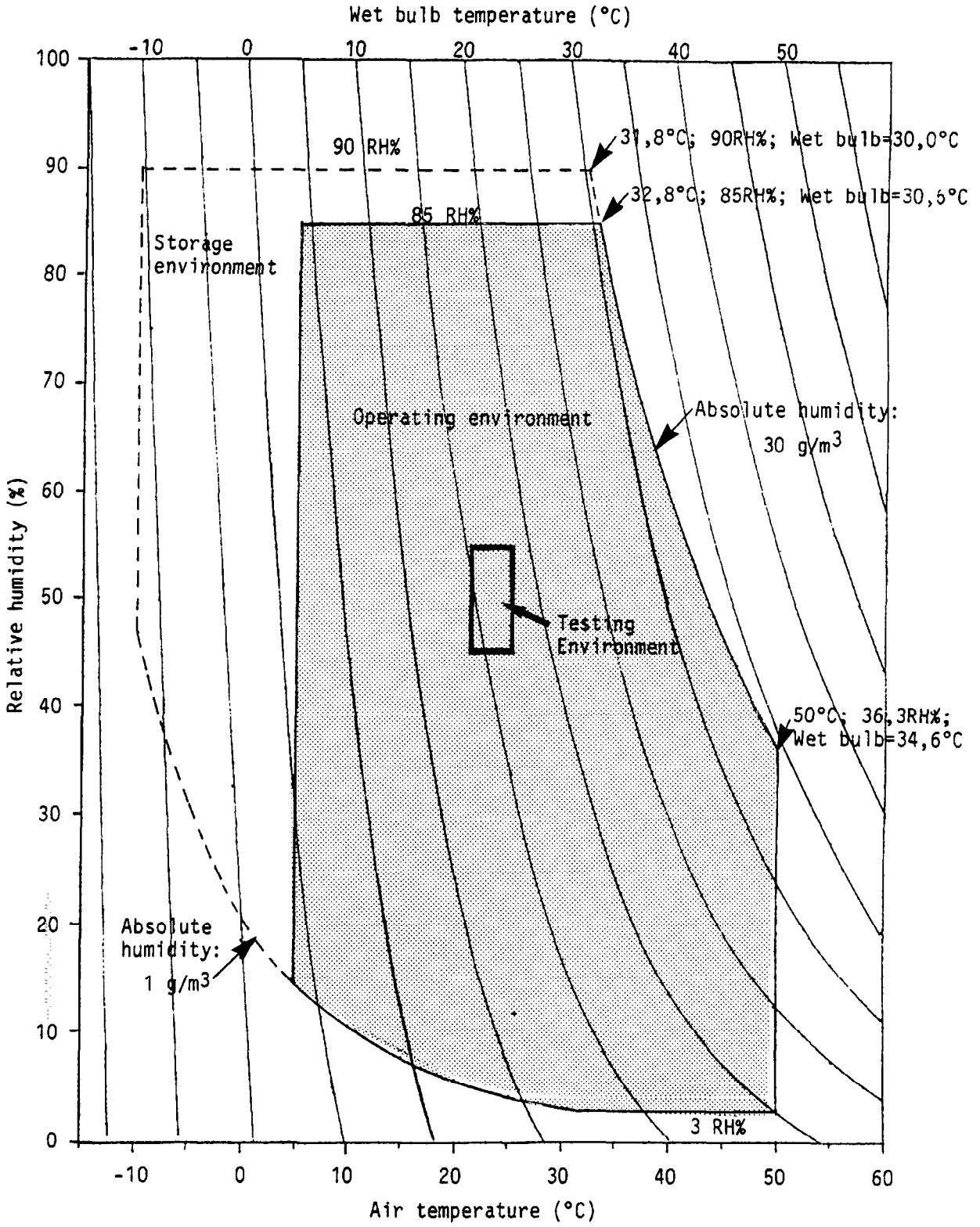

Figure L.2 - Wet bulb temperatures of the operating and storage environments

Copyright International Organization for Standardization
Provided by IHS under license with ISO
No reproduction or networking permitted without license from IHS
Not for Resale

Annex M
(normative)

Air cleanliness class 100 000

The classification of air cleanliness is based on a particle count with a maximum allowable number of specified minimum sized particles per unit volume, and on a statistical average particle size distribution.

M.1 Definition

The particle count shall not exceed a total of 3 500 000 particles per cubic metre of a size 0,5 µm and larger.

The statistical average particle size distribution is given in figure M.1. Class 100 000 means that 3 500 000 particles per cubic metre of a size of 0,5 µm and larger are allowed, but only 25 000 particles per cubic metre of a size of 5,0 µm and larger.

It should be recognized that single sample distribution may deviate from this curve because of local or temporary conditions. Counts below 350 000 particles per cubic metre are unreliable except when a large number of samplings is taken.

M.2 Test method

For particles of sizes of the 0,5 µm to 5,0 µm, equipment employing light-scattering principles shall be used. The air in the controlled environment is sampled at a known flow rate. Particles contained in the sampled air are passed through an illuminated sensing zone in the optical chamber of the instrument. Light scattered by individual particles is received by a photo detector which converts the light pulses into electrical current pulses. An electronic system relates the pulse height to particle size and counts the pulses such that the number of particles in relation to particle size is registered or displayed.

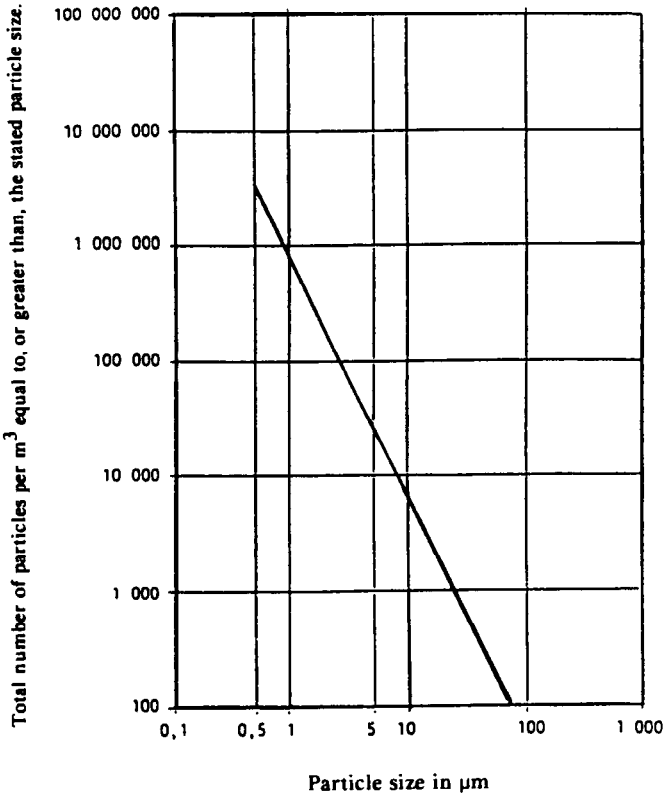

Figure M.1 - Particle size distribution curve

Copyright International Organization for Standardization
Provided by IHS under license with ISO
No reproduction or networking permitted without license from IHS
Not for Resale

Annex N
(normative)

Position of the cartridge relative to the reference planes

This annex shows the position of the cartridge relative to the reference planes, as specified in 10.2.

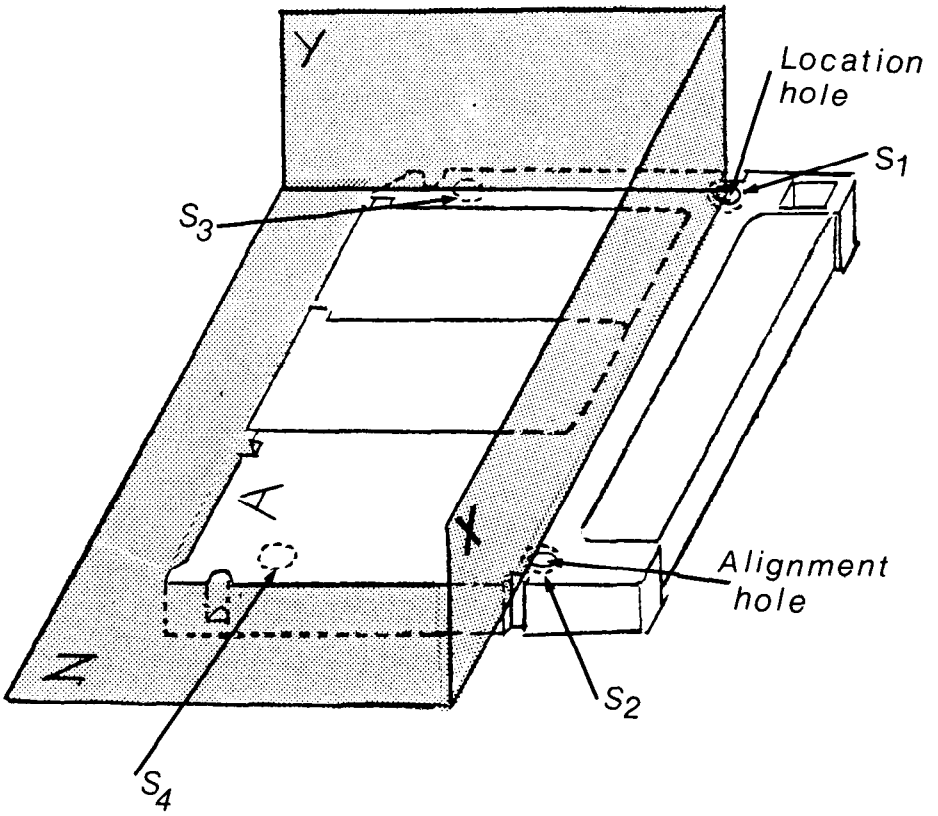

Figure N.1 - Position of the cartridge

Copyright International Organization for Standardization
Provided by IHS under license with ISO
No reproduction or networking permitted without license from IHS
Not for Resale

Annex P
(informative)

Transportation

P.1 As transportation occurs under a wide range of temperature and humidity variations, for differing periods, by many methods of transport and in all parts of the world it is not possible to specify conditions for transportation or for packaging.

P.2 The form of packaging should be agreed between sender and recipient or, in the absence of such agreement, is the responsibility of the sender. It should take account of the following hazards.

P.2.1 Temperature and humidity

Insulation and wrapping should be designed to maintain the conditions for storage over the estimated period of transportation.

P.2.2 Impact loads and vibration

a) Avoid mechanical loads that would distort the shape of the cartridge.

b) Avoid dropping the cartridge.

c) Cartridges should be packed in a rigid box containing adequate shock-absorbent material.

d) The final box should have a clean interior and a construction that provides sealing to prevent the ingress of dirt and moisture.

Annex Q
(informative)

Office environment

Due to their construction and mode of operation optical disk cartridges have considerable resistance to the effects of dust particles around and inside the disk drive. Consequently it is not generally necessary to take special precaution to maintain a sufficiently low concentration of dust particles.

Operation in heavy concentrations of dust should be avoided, e.g. in a machine shop or on a building site.

Office environment implies an environment in which personnel may spend a full working day without protection and without suffering temporary or permanent discomfort.

Copyright International Organization for Standardization
Provided by IHS under license with ISO
No reproduction or networking permitted without license from IHS
Not for Resale

Annex R
(normative)

Relaxation by zones of the requirements for signals

Table R.1 shows the zones in which the requirements specified in the body of this International Standard shall be satisfied and those in which they are relaxed.

indicates the zones in which the values of the signals shall be within the range specified.

indicates the zones in which the range is extended from 80% of the lower limit to 120% of the upper limit. The requirement for uniformity is extended from ± 12% to ± 20%.

No marking indicates the zones for which the requirements are not applicable.

Table R.1 - Requirements for signals in each zone

CLAUSE	SIGNAL	ZONES										
		INITIAL	ACQUIRE		TEST		CONTROL	DATA	CONTROL	TEST		BUFFER
			LEAD	FOCUS	MFG.	DRIVE				DRIVE	MFG.	
11.5.4	Reflectance											
11.5.4	Uniformity											
21.1.a	Cross Track											
21.1.b	Cross Track											
21.2	Cross Track Min.											
21.3.a	PP											
21.3.b	PP											
21.4	DPP (first)											
21.4	DPP (second)											
21.5	On Track											
22.1	SM											
22.2	VFO_1, VFO_2											
22.3	AM, ID, PA											
23	Embossed Data											
24.3.2	Write Power											
24.4.1	Erase Power											
25.1	FOM											
25.2	Imbalance											
26.1	Resolution											
26.2	NBSN											
26.3	Cross Talk											
27	Erase Char.											

Copyright International Organization for Standardization
Provided by IHS under license with ISO
No reproduction or networking permitted without license from IHS
Not for Resale

UDC 681.327.68

Descriptors: data processing, information interchange, data storage devices, optical disks, optical disk cartridges, specifications, dimensions, track formats, tests.

Price based on 95 pages

Copyright International Organization for Standardization
Provided by IHS under license with ISO
No reproduction or networking permitted without license from IHS

Not for Resale