INTERNATIONAL STANDARDIZED PROFILE

ISO/IEC ISP 11185-14

First edition
1995-07-15

Information technology — International Standardized Profiles FVT2nn — Virtual Terminal Basic Class — Register of control object type definitions —

Part 14:
FVT2112 — Printer Control Object

Technologies de l'information — Profils normalisés internationaux FVT2nn — Classe de base de terminal virtuel — Registre de définitions de type d'objet de commande —

Partie 14: FVT2112 — Objet de commande d'impression

Reference number
ISO/IEC ISP 11185-14:1995(E)

Copyright International Organization for Standardization
Provided by IHS under license with ISO
No reproduction or networking permitted without license from IHS

Not for Resale

Contents

Page

Foreword iii

Introduction iv

1 Scope 1

2 Normative references 3

3 Definitions 4

4 Abbreviations 4

5 Principles of conformance to VT Profiles 4

6 Printer control object 4

Annexes

A ISPICS Requirements List 7

B Committed Printing 8

© ISO/IEC 1995
All rights reserved. Unless otherwise specified, no part of this publication may be reproduced or utilized in any form or by any means, electronic or mechanical, including photocopying and microfilm, without permission in writing from the publisher.

ISO/IEC Copyright Office • Case Postale 56 • CH-1211 Genève 20 • Switzerland

Printed in Switzerland

Copyright International Organization for Standardization
Provided by IHS under license with ISO
No reproduction or networking permitted without license from IHS

Not for Resale

Foreword

ISO (the International Organization for Standardization) and IEC (the International Electrotechnical Commission) together form the specialized system for worldwide standardization. National bodies that are members of ISO or IEC participate in the development of International Standards through technical committees established by the respective organization to deal with particular fields of technical activity. ISO and IEC technical committees collaborate in fields of mutual interest. Other international organizations, governmental and non-governmental, in liaison with ISO and IEC, also take part in this work.

In the field of information technology, ISO and IEC have established a joint technical committee, ISO/IEC JTC 1. In addition to developing International Standards, ISO/IEC JTC 1 has created a Special Group on Functional Standardization for the elaboration of International Standardized Profiles.

An International Standardized Profile is an internationally agreed, harmonized document which identifies a standard or group of standards, together with options and parameters, necessary to accomplish a function or set of functions.

Draft International Standardized Profiles are circulated to national bodies for voting. Publication as an International Standardized Profile requires approval by at least 75% of the national bodies casting a vote.

International Standardized Profile ISO/IEC ISP 11185-3 was prepared with the collaboration of

- *OSI Asia-Oceania Workshop (AOW);*
- *European Workshop for Open Systems (EWOS);*
- *OSI Environment Implementors' Workshop (OIW).*

This International Standardized Profile ISO/IEC ISP 11185 forms an International Register of information objects in accordance with the procedures for the operation of OSI Registration Authorities laid down in ISO/IEC 9834. It is issued in parts, with additional parts being issued as further entries are added to the register. Each part is prepared in accordance with an approval and maintenance process laid down by the Special Group on Functional Standardization of ISO/IEC JTC1, *Information technology.*

ISO/IEC ISP 11185 is issued under the general title *Information technology — International Standardized Profiles FVT2nn — Virtual Terminal Basic Class — Register of control object type definitions.* At present the following parts are published or are in the course of preparation:

- *Part 1: FVT211, FVT212 — Sequenced and Unsequenced Application Control Objects*
- *Part 2: FVT213, FVT214 — Sequenced and Unsequenced Terminal Control Objects*
- *Part 3: FVT215, FVT216 — Application RIO Record Loading Control Object, Terminal RIO Record Notification Control Object*
- *Part 4: FVT217 — Horizontal Tabulation Control Object*
- *Part 5: FVT218 — Logical Image Control Object*
- *Part 6: FVT219 — Status Message Control Object*
- *Part 7: FVT2110 — Entry-Control Control Object*
- *Part 8: FVT221 — Forms FEICO (Field Entry Instruction Control Object) No.1*
- *Part 9: FVT222 — Paged FEICO (Field Entry Instruction Control Object) No.1*
- *Part 10: FVT231 — Forms FEPCO (Field Entry Pilot Control Object) No.1*
- *Part 11: FVT232 — Paged FEPCO (Field Entry Pilot Control Object) No.1*
- *Part 12: FVT2116, FVT2117, FVT2118, FVT2119 — Generalized Telnet Synch, Signal, Negotiation and Subnegotiation Control Objects*
- *Part 13: FVT2111 — Waiting Time Control Object*
- *Part 14: FVT2112 — Printer Control Object*
- *Part 15: FVT2113 — Field Definition Management Control Object*
- *Part 16: FVT2114 — Terminal Signal Titles Control Object*
- *Part 17: FVT2115 — Help Text Control Object*

Annex A forms an integral part of this part of ISO/IEC ISP 11185. Annex B is for information only.

Copyright International Organization for Standardization
Provided by IHS under license with ISO
No reproduction or networking permitted without license from IHS
Not for Resale

Introduction

This International Standardized Profile ISO/IEC ISP 11185 is defined within the context of Functional Standardization, in accordance with the principles specified in ISO/IEC TR 10000, "Framework and Taxonomy of International Standardized Profiles". The context of Functional Standardization is one part of the overall field of Information Technology (IT) standardization activities, covering base standards, profiles and registration mechanisms.

The Open Systems Interconnection (OSI) Standard ISO 9040 for the Virtual Terminal Basic Class Service identified a requirement for an International Register of VT Control Object type definitions. Procedures for the operation of this International Register are laid down in ISO/IEC 9834-5. This International Standardized Profile provides this register. The individual entries in this register constitute Interchange Format and Representation Profiles (F-Profiles) within the framework of ISO/IEC TR 10000.

This part of ISO/IEC ISP 11185 was developed in close cooperation between the three Regional OSI Workshops, namely the OSI Implementors' Workshop (OIW) of the United States, the European Workshop for Open Systems (EWOS) and the OSI Asia-Oceania Workshop (AOW). It was developed under the editorship of EWOS. The text is harmonized between these three Workshops and it has been ratified by the plenary assemblies of each Workshop.

Copyright International Organization for Standardization
Provided by IHS under license with ISO
No reproduction or networking permitted without license from IHS
Not for Resale

Information technology — International Standardized Profiles FVT2nn — Virtual Terminal Basic Class — Register of control object type definitions

Part 14:
FVT2112 — Printer Control Object

1 Scope

1.1 General

The concept of Profiles for OSI, and the structure of the International Standardized Profiles that document them, are defined in ISO/IEC TR 10000-1. Such Profiles are divided into a number of different classes and sub-classes. Two of these classes contain sub-classes comprising functions of the Virtual Terminal Basic Class Service and Protocol specified in the base standards ISO 9040 and ISO 9041. These are the Application Profiles (A-Profiles) and the Interchange Format and Representation Profiles (F-Profiles).

The relationship between A-Profiles and F-Profiles is described in ISO/IEC TR 10000-1, subclause 7.3.2 and is as follows. Application Layer base standards require, implicitly or explicitly, the structure of information carried or referenced by them to be specified for each instance of communication. It is the purpose of F-Profiles to specify such information structures. Particular functional requirements may then be met by the combination of an A-Profile with one or more F-Profiles.

Establishment of a VT-association involves the selection by negotiation of a particular Virtual Terminal Environment profile (VTE-profile), and of particular values for any arguments of that VTE-profile. The VTE-profile specification, and possibly also the values of certain VTE-profile arguments, may in turn reference the definitions of VT control object types and assignment types. These VTE-profiles, control object types and assignment types are thus information structures that require explicit reference within the VT protocol. Particular instances of these structures are fully defined within the base standards, but the base standards also provide for further instances to be defined by registration. Each registered instance constitutes an F-Profile within the framework of ISO/IEC TR 10000.

The Virtual Terminal Basic Class Service and Protocol may be used to realise a wide range of distinct functions. Particular functions may be realised through the selection of appropriate VT functional units, F-Profiles and other VTE-profile argument values. The specification of the selection required to realise a particular function and to promote interoperability constitutes a Virtual Terminal A-Profile within the framework of ISO/IEC TR 10000.

The three International Registers of VT information structures and the specifications of VT Application Profiles are each published as a separate multi-part ISP as follows:

- ISO/IEC ISP 11184 is the Register of VTE-profiles;
- ISO/IEC ISP 11185 is the Register of control object type definitions;
- ISO/IEC ISP 11186 is the Register of assignment-type definitions;
- ISO/IEC ISP 11187 contains the specifications of VT Application Profiles.

This part of ISO/IEC ISP 11185 contains the type definitions of a control object that may be used to map regions of the display object exclusively on to a display surface such as a

Copyright International Organization for Standardization
Provided by IHS under license with ISO
No reproduction or networking permitted without license from IHS Not for Resale

screen and a printing device and to control the operations of the printer

1.2 Position within the taxonomy

The taxonomy of International Standardized Profiles for OSI is laid down in ISO/IEC TR 10000-2. Within the classification scheme of this taxonomy, the OSI Profiles specified in this International Standardized Profile are in the Virtual Terminal Registered Object sub-class of the class of Interchange Format and Representation Profiles.

A Profile within this subclass has a Profile identifier of the form FVT*abc*, where *abc* is a structured numerical identifier that identifies the position of the Profile within each of the three levels of subdivision of the subclass. The values of *a* and *b* are single digits but *c* is an integer that is not necessarily a single digit.

In principle the ISO Virtual Terminal model allows for multiple classes of operation, although at the time of publication of this International Standardized Profile only the Basic Class has been defined. The value of the identifier component *a* distinguishes between distinct types of information object as follows:

- *a* = 1 for Basic Class VTE-profiles;
- *a* = 2 for Basic Class Control Objects;
- *a* = 3 for Basic Class Assignment Types.

Values of a greater than 3 are reserved for future developments.

This International Standardized Profile ISO/IEC ISP 11185 contains the specifications of the Profiles with identifiers of the form FVT2*bc*. For this form of identifier, the component *b* distinguishes between the five major classifications of Basic Class Control Objects as follows:

- *b* = 1 for Miscellaneous Control Objects;
- *b* = 2 for Field Entry Instruction Control Objects;
- *b* = 3 for Field Entry Pilot Control Objects;
- *b* = 4 for Reference Information Objects;
- *b* = 5 for Termination Conditions Control Objects.

Each of these classifications corresponds to a sub-register under the procedures of ISO/IEC 9834-5. The identifier component *c* is the serial number of the control object type in the appropriate sub-register. Values of *b* greater than 5 are reserved for new classifications of Basic Class Control Objects that may be defined in future amendments to ISO 9040.

This part of ISO/IEC ISP 11185 contains the type definitions of the Basic Class Control Object with the Profile identifier FVT2112 — Printer CO.

1.3 Scenario

The specification of the Virtual Terminal Service is given in ISO 9040. It is based on a model in which two VT-users communicate by means of a shared Conceptual Communication Area (CCA) that is a conceptual part of the VT service-provider. Information exchange is modelled by one VT-user updating the content of the CCA and the changed state of the CCA then being made accessible to the peer VT-user.

Control objects (COs) form one of the types of information object that may be present in the CCA. This is illustrated in figure 1, in which CO- 1, CO-2, ... CO-n represent a number of different control objects present in the CCA. The negotiation during establishment of a VT-association will determine whether or not these will include the control object whose specifications are given in this part of ISO/IEC ISP 11185.

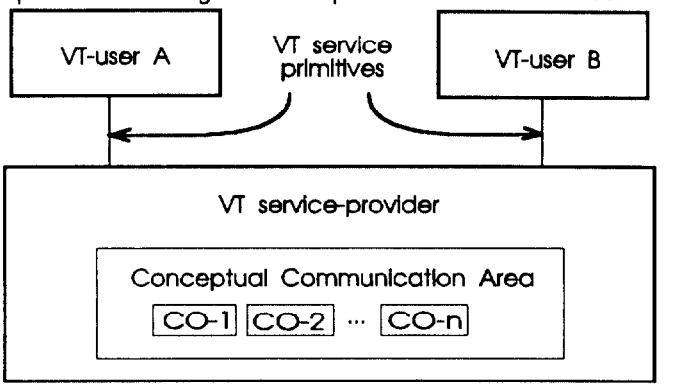

Figure 1 - Control Objects in the VT Service Model

The CCA is structured by the Virtual Terminal Service into a number of components. For a control object the Data Structure Definition (DSD) component of the CCA contains the syntax of its information content, including the range of possible values and the permitted update operations. The current value of its information content is contained in the Control, Signal and Status store (CSS) component. Updates to the current value take place through the issue of VT service primitives by one VT-user to the service-provider. Changes of state of the CCA are made accessible through the issue of VT service primitives by the service-provider to the peer VT-user.

By ISO 9040, clause 14, COs enable VT-users to handle control information related to virtual terminal functions and to real devices. This control is exercised by the VT-users through semantics associated with the information content and with the update operations of the CO. Definition of the semantics, or specification of the source of the semantics if the semantic details are not fully prescribed, forms part of the registered definition of the CO. These semantics are not however of concern to the VT service-provider itself. The DSD will contain an ASN.1 object identifier that identifies the registered definition, but the VT service-provider merely acts as a repository of this value. It is only the VT-user that requires knowledge of the registered definition.

NOTE 1 — The VTE-parameter values that determine the syntax of the information content may not be negotiated explicitly during association establishment. Moreover, in the case of non-parametric COs these values do not determine the details of the syntax. Such values and details form part of the registered definition of the CO. Since the VT service- provider is not required to have knowledge of this registered definition, in principle the VT-users provide the VT service-provider with such information through local management procedures. Whether or not this is necessary in practice depends on the configuration of the implementations concerned.

Copyright International Organization for Standardization
Provided by IHS under license with ISO
No reproduction or networking permitted without license from IHS
Not for Resale

The control object defined in this part of ISO/IEC ISP 11185 assumes an asymmetry between the two communicating end systems. One end system is assumed to have a terminal role and to contain devices for the input and display of data and for signalling. These devices form part of the VT-user component of that end system. The other end system is assumed to have an application rôle and to contain an application package that the terminal end system desires to access. This asymmetry may, but need not, be recognised by the VT Service; provision for such recognition exists only in an S-mode VT-association. The control object defined in this part of ISO/IEC ISP 11185 is used to enable the application package to issue control signals to the devices of the terminal end system.

Control objects of the types defined in this part of ISO/IEC ISP 11185 are used to enable the terminal end system to issue signals to the application package without the need for the VT service-provider to be aware of the semantic significance placed on these signals by the application package. These signals are issued in response to the operation of an object updating device by the human user of the terminal end system.

The Virtual Terminal Protocol specification given in ISO 9041-1 models the VT service-provider in terms of protocol exchange between two Virtual Terminal Protocol Machines (VTPMs), each with its own CCA. The CCA of each VTPM is updated both by service primitives received from its own VT-user and by protocol elements received from the peer VTPM. Corresponding service primitives and protocol elements are issued by the VTPM to provide notification of changes to the content of its CCA. This is illustrated in figure 2 in the context of the asymmetric end systems described above. The control object type definitions given in this part of ISO/IEC ISP 11185 are expressed in terms of this model.

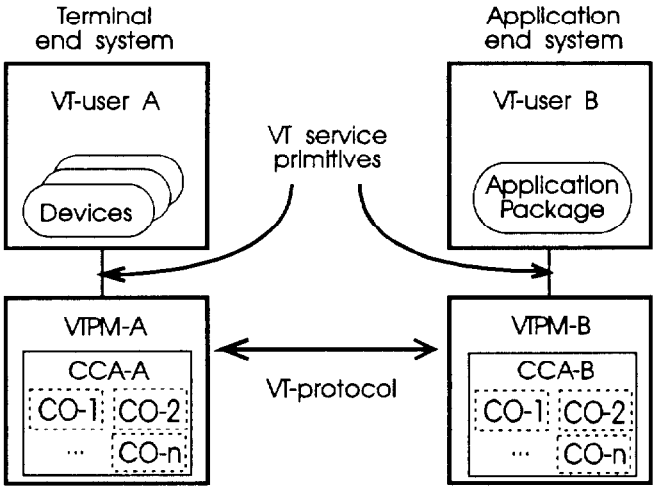

Figure 2 - Control objects in the VT Protocol model

For certain types of control object the abstract syntax of ISO 9041-1 does not provide a complete specification for the representation of CO update operations. This arises where the abstract syntax of ISO 9041-1 makes use of an ASN.1 any type, or where symbolic values have to be encoded in terms of an ASN.1 integer type. Control object type definitions are required by ISO/IEC 9834-5 to provide the necessary refinement of the abstract syntax.

NOTE 2 — Since an abstract syntax is made available for use through its inclusion in a presentation context, and since the Presentation service-provider has no knowledge of control object type definitions, in principle the VT-users provide the Presentation service-provider with these refinements to the abstract syntax through local management procedures. Whether or not this is necessary in practice depends on the configuration of the implementations concerned

2 Normative references

The following documents contain provisions which, through reference in this text, constitute provisions of this part of ISO/IEC ISP 11185. At the time of publication, the editions indicated were valid. All documents are subject to revision, and parties to agreements based on this International Standardized Profile are warned against automatically applying any more recent editions of the documents listed below, since the nature of references made by ISPs to such documents is that they may be specific to a particular edition. Members of IEC and ISO maintain registers of currently valid International Standards and ISPs and ITU-T maintains published editions of its current Recommendations.

ISO/IEC 7498-1:1994, *Information technology - Open Systems Interconnection - Basic Reference Model - Part 1: The Basic Model.* (See also ITU-T Recommendation X.200).

ISO 8822:1994, *Information technology - Open Systems Interconnection - Presentation service definition.* (See also ITU-T Recommendation X.216).

ISO/IEC 8824:1990, *Information technology - Open Systems Interconnection - Specification of Abstract Syntax Notation One (ASN.1).* (See also CCITT Recommendation X.208).

ISO 9040:1990, *Information technology - Open Systems Interconnection - Virtual Terminal Basic Class Service.*

ISO 9041-1:1990, *Information technology - Open Systems Interconnection - Virtual Terminal Basic Class Protocol - Part 1: Specification.*

ISO/IEC 9041-2:1993, *Information technology - Open Systems Interconnection - Virtual Terminal Basic Class Protocol - Part 2: Protocol Implementation Conformance Statement (PICS) Proforma.*

ISO 9834-1:1993, *Information technology - Open Systems Interconnection - Procedures for the Operation of OSI Registration Authorities - Part 1: General Procedures.* (See also CCITT Recommendation X.660).

ISO 9834-5:1991, *Information technology - Open Systems Interconnection - Procedures for the Operation of OSI Registration Authorities - Part 5: Register of VT Control Object Definitions.*

ISO/IEC TR 10000-1:1994, *Information technology - Framework and taxonomy of International Standardized Profiles - Part 1: General principles and documentation framework.*

Copyright International Organization for Standardization
Provided by IHS under license with ISO
No reproduction or networking permitted without license from IHS
Not for Resale

ISO/IEC TR 10000-2:1994, *Information technology - Framework and taxonomy of International Standardized Profiles - Part 2: Principles and Taxonomy for OSI Profiles.*

ISO/IEC 10731:1994, *Information technology - Open Systems Interconnection - Basic Reference Model - Conventions for the definition of OSI services.* (See also ITU-T Recommendation X.210).

3 Definitions

For the purposes of this part of ISO/IEC 11185, the following definitions apply.

3.1 General OSI terminology

3.1.1 This part of ISO/IEC ISP 11185 makes use of the following terms defined in ISO/IEC 10731:

a) service primitive;
b) service-provider.

3.1.2 This part of ISO/IEC ISP 11185 makes use of the following terms defined in ISO 8822:

a) abstract syntax;
b) presentation context.

3.1.3 This part of ISO/IEC ISP 11185 makes use of the following terms defined in ISO/IEC 8824:

a) any type;
b) object descriptor type;
c) object identifier.

3.1.4 This part of ISO/IEC ISP 11185 makes use of the following terms defined in ISO/IEC 9834-1:

a) registration;
b) registration-structured-name.

3.2 Terminology of VT base standards

3.2.1 This part of ISO/IEC ISP 11185 makes use of the following terms defined in ISO 9040:

a) control object;
b) device object;
c) VT-association;
d) VT-environment (VTE);
e) VT-user;
f) VTE-parameter;
g) VTE-profile;
h) VTE-profile argument.

3.2.2 This part of ISO/IEC ISP 11185 makes use of the following terms defined in ISO 9041-1:

a) protocol element.

4 Abbreviations

For the purposes of this International Standardized Profile the following abbreviations apply.

AOW	OSI Asia-Oceania Workshop;
EWOS	European Workshop for Open Systems;
OIW	OSI Implementors' Workshop.

All other abbreviations used are defined in ISO/IEC TR 10000-1 or ISO 9040.

5 Principles of conformance to VT Profiles

An implementation of the Virtual Terminal Protocol conforms to an FVT2nn Profile that defines a control object type if the protocol implementation is capable of sending and receiving PDUs corresponding to all update operations permitted for that CO type. Conformance of a protocol implementation to an FVT2nn Profile does not place requirements on the ability of the implementation to negotiate the presence in the CCA of an instance of this CO type. Such requirements fall within the scope of conformance to an FVT1nn Profile that specifies a VTE-profile.

A system that includes an implementation of the VT Protocol may be claimed to conform also to an AVTnn Profile. Conformance to an AVTnn Profile may require that CO update operations received by the VT-user component of the system are interpreted in accordance with the semantics defined within the appropriate CO type definition. Conformance to CO semantics is not within the scope of conformance to any FVTnnn Profile.

The conformance requirements of the Virtual Terminal Protocol are specified in ISO 9041-1, clause 13. The supplier of a protocol implementation which is claimed to conform to ISO 9041-1 is required to complete a copy of the PICS proforma provided in ISO/IEC 9041-2. Annex A of this part of ISO/IEC ISP 11185 provides an ISPICS Requirements List (IPRL) for the Profile FVT2112 specified herein. This IPRL specifies constraints on the answers that may be given in the completed PICS for a protocol implementation that claims conformance to this Profile.

6 Printer control object

6.1 Entry number

This is the twelfth in the sub-register for Miscellaneous Control Objects. This register assigns it the entry number:

MISCO--12

6.2 Name of sponsoring authority

This entry is sponsored by the European Workshop for Open Systems (EWOS).

6.3 Date

The date of submission of this proposal is 1992-01-09.

Copyright International Organization for Standardization
Provided by IHS under license with ISO
No reproduction or networking permitted without license from IHS
Not for Resale

6.4 Identifier

The name assigned to an information object by an International Register is required by ISO/IEC 9834-1 to be a registration-structured-name. A registration-structured-name has the form that is an ASN.1 object identifier. It may optionally also have a form that is a relative distinguished name as defined in ISO/IEC 9594-2.

The object identifier form for the name assigned to this register entry is:

{iso(1) standard(0) 9834 vt-co-def(5) misco(0) pr(12)}

In accordance with ISO 9040, clause 20.1.1, this object identifier shall be used as the value of the CO-type-identifier VTE-parameter for a control object in order to identify this register entry as the source of the information structure and semantic content of the control object.

6.5 Descriptor value

The value of the ASN.1 object descriptor type assigned to this register entry is:

"VT CO for printing".

6.6 CO parameters

To define a PCO, the CO VTE-parameters take the following values:

CO-name:	any value unique within the VTE;
CO-structure:	5;
CO-access:	"WAVAR + WACI" if the Application VT-user is the association initiator, "WAVAR + WACA" if the Terminal VT-user is the association initiator;
CO-priority:	"normal";
CO-trigger:	"not selected".

6.7 CO values and semantics

6.7.1 Data element values

This CO type presumes an asymmetry of use between the two end systems in which one has a terminal role and the other an application role. Such an asymmetry is assigned in accordance with note 1 ISO 9040, clause 12. It is not necessary for this asymmetry to be recognised by the VT service-provider in accordance with ISO 9040, subclause 19.3.2, which provides for the assignment, in S-mode only, of Terminal VT-user and Application VT-user roles.

This register entry specifies the following values for VTE-parameters of this control object type:

a) Display region size in y-arrays

CO-element-id:	takes value 1
CO-category:	takes the value "integer"
CO-size:	takes a value according to the z dimension capability

b) Printer region size in y-arrays

CO-element-id:	takes value 2
CO-category:	takes the value "integer"
CO-size:	takes a value according to the z dimension capability

c) Printer Command

CO-element-id:	takes value 3
CO-category:	takes the value "integer"
Value 0 -	**null**
Value 1 -	**copy** to secure storage
Value 2 -	**print** from secure storage
Value 3 -	**clear** secure storage
Value 4 -	**print-direct**
CO-size:	4

d) Print extent start

CO-element-id:	takes value 4
CO-category:	takes the value "integer"
CO-size:	takes a value according to the Z dimension capability

e) Print extent end

CO-element-id:	takes value 5
CO-category:	takes the value "integer"
CO-size:	takes a value according to the Z dimension capability

6.7.2 Semantics

CO element (a) defines the length of the region of the display object mapped to the main display device. CO element (b) defines the length of the region of the display object mapped to the printer device. The two regions are intended to be contiguous but disjoint with the region defined by (a) being lower in the z-dimension than that defined by (b). It is intended that the total size so defined for the two regions should equal the z-window value. As the z-update-window moves forward, so the regions are replicated. It is intended that when mapping the regions inside the z-window, the main display region should be treated as though it were contiguous even though the z-update-window may not have moved forward so that its lower edge aligns with a region boundary. The same applies to the print region. However, it is anticipated that the normal way of operating this mechanism would be to align the z-update-window boundary with a region boundary.

CO element (c) has been specifically designed so that the PCO can be used when committed printing is in operation. See annex B.

The "copy" command is used to make a copy of the print region in secure storage that can survive at least VT-association failure.

The "print" command is used to initiate printing from the secure storage. Secure storage is cleared as a result so that it is impossible to print this area more than once.

The "clear" command is used to clear secure storage when rollback takes place.

Copyright International Organization for Standardization
Provided by IHS under license with ISO
No reproduction or networking permitted without license from IHS Not for Resale

The "print-direct" command is used to print directly from the print region and is intended for use when commited printing is not in operation.

CO element (d) identifies the y-array at which printing or copying should start. CO element (e) identifies the y-array at which printing or copying should end. The region to be printed or copied is inclusive of the values in (d) and (e). If a display region lies between the y-arrays identified in (d) or (e), it is ignored for the purposes of printing or copying.

6.8 Additional information

When the Printer CO is brought into use by the referencing implementation, the second boolean in the default device CO for the printer has semantics as specified in this clause.

The second boolean is used to convey the result of the printer operation. It takes the values:

false = "failure"
true = "success"

After the terminal VT-user receives any printer command update to the Printer CO, the terminal VT-user updates the printer device default control object second boolean to reflect the result of the execution of the command. The semantic significance is attached to the reception of an update to this boolean and not to its current value.

6.8.1 Usage

The function of the PCO is to partition the display object so that one group of y-arrays is mapped on to the main display device and another group of y-arrays is mapped on to the printer device. The two regions of the display object would normally be disjoint so that normal display/keyboard dialogues may operate independently of printing. Both regions are subject to update in the normal way although it is anticipated that the printer region will only be updated by the application VT-user.

Copyright International Organization for Standardization
Provided by IHS under license with ISO
No reproduction or networking permitted without license from IHS
Not for Resale

Annex A

(normative)

ISPICS Requirements List

A.1 Protocol requirements

This annex provides an ISPICS Requirements List (IPRL) for the Profile FVT2112 specified in this part of ISO/IEC ISP 11185. The PICS proforma for the VT protocol is given in ISO/IEC 9041-2. This IPRL specifies constraints on the answers that may be given in the completed PICS for an implementation that claims conformance to these Profiles.

These constraints are given in tables A.1 and A.2. The notation used in the tables is as follows. Individual items in a PICS proforma are referenced by the means specified in A.9.1 of ISO 9646-2. Such a reference has the form x-y/z, where x is the number of the ISO Standard that specifies the protocol, y is a reference within the PICS proforma of this Standard to the smallest subclause that contains the item concerned, and z is the reference number of the item within that subclause. Where this IPRL needs to present the constraints on a particular item as two or more separate cases, a suffix of the form '.n' is added to the item reference where n is a serial number that labels the different cases.

The item name is taken from the PICS proforma. The "status" columns of the IPRL tables take priority over the corresponding "status" columns of the PICS proforma and they use the notation of that proforma. They refine the PICS proforma status values by evaluating conditional expressions or converting optional values to a more specific form. The following conditional values are used in these tables:

c1 If 9041-A.2.2/1 then m else -;
c2 If application implementation then m else –
c3 If terminal implementation then m else –

the referenced predicate from ISO/IEC 9041-2 is that S-mode is supported.

Where an IPRL table has a "Profile values" column, the status value applies separately to each listed Profile value.

For any column in an IPRL table that corresponds to an answer column in the PICS proforma, the values listed are the acceptable answers for the item concerned. The following special notation is used in these columns:

Any The IPRL places no constraint on the answer;
n/a The column is not relevant to this item.

A.2 Profile-specific requirements

An IPRL may also specify constraints on the answers to additional questions that concern Profile-specific conformance requirements which are outside the scope of any referenced base standard. These questions will be given in the IPRL itself.

This IPRL does not specify any Profile-specific constraints.

Table A.1 — VTE requirements for FVT2112 (Printer Control Object)

Item reference no. 9041 –	Name of item	Status	Numbers supported	Negotiable
A.2.1/6	Enhanced Access-rules	c1	n/a	n/a
A.2.1/7	Structured COs	m	n/a	n/a

Table A.2 — PDU requirements for FVT2112 (Printer Control Object)

Item reference no. 9041 –	Name of item	Profile values	Sending status	Receiving status
A.5.15.4/10	multi-element		c2	c3
A.5.15.4.1/7	integerUpdate	Any	c2	c3

Copyright International Organization for Standardization
Provided by IHS under license with ISO
No reproduction or networking permitted without license from IHS Not for Resale

Annex B

(informative)

Committed Printing With OSI TP

B.1 Introduction

This annex is concerned with a scenario where it is necessary to provide an interface betwen an OSI Transaction Processing domain and an OSI Virtual Terminal domain for the purposes of associating commitment semantics with certain VT operations, in particular committed printing.

This annex assumes that a mechanism exists to allow formatted printing to take place in conjunction with a VT dialogue on a single VT association. This is likely to use a partitioning of the display object under the control of the Printer Control Object.

This annex also assumes that the SACO defined in ISP 11185-1 is used to convey the signals "keyboard-locked" and "keyboard-unlocked".

B.2 Requirement

The committed printing scenario requires that commitment semantics be associated with the production of a printed document such as a cheque. The act of printing such a document is required to be tied to the moving of bound data within the TP domain to its final state. Equally, in a rollback situation, it is necessary to ensure that printing does not take place. Finally, the mechanisms associated with recovery from loss of the VT association need to be defined.

B.3 Implementation Scenario

Figure B.1 illustrates the implementation scenario for Committed Printing.The terminal system is connected to a host machine application which also partakes in distributed processing coordinated by OSI TP. Conceptually, the part of the application which is involved with OSI TP is the TPSU. In an instance of a single transaction, the entity involved is the TPSUI (see ISO/IEC 10026-1). It is assumed that there is a service interface within the TPSUI which provides access to the TP service provider and also a service interface within the TPSUI which provides access to the VT service provider.

The TPSUI acts as a gateway between the OSI TP domain and the OSI VT domain. Within the terminal system, the VT service provider interfaces to the VT-user (see ISO 9040). The VT-user component provides the mapping between the VT-service provider and the real devices (eg a screen, a keyboard, a printer and secure storage for the VT equivalent of bound data).

Finally, for the purposes of this annex, it is assumed that unchained transactions are being used.

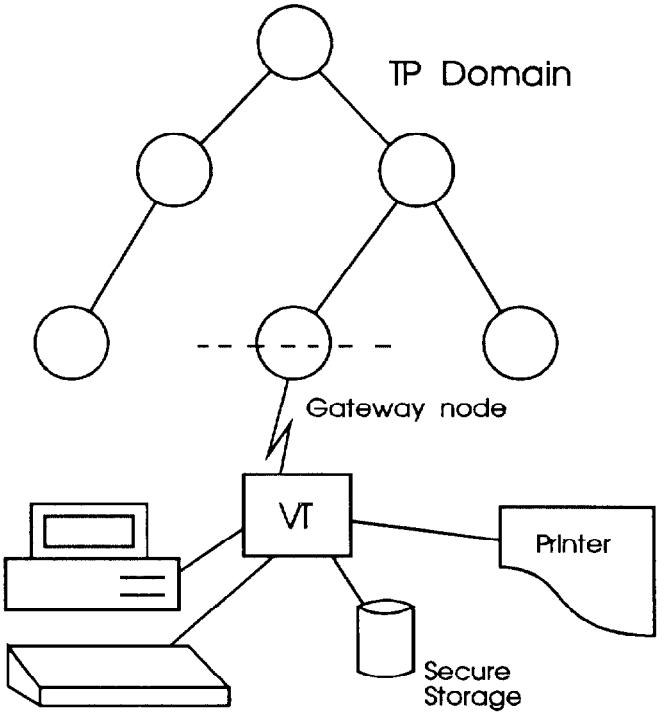

Figure B.1 - Implementation Scenario

B.4 VT Initialisation at Transaction Start

The treatment of committed printing in this annex is aimed at use by the S-mode forms and paged profiles. It is assumed that some kind of form initialisation will take place involving the loading of one or more page templates into the VT environment. This may be done on an as needed basis by down-line load from the host application or from local storage at the terminal using the form template service defined elsewhere. Before the page templates can be loaded there may be a need to initialise the VT data structures left over from the previous transaction. This is best achieved by employing the Field Definition Management CO specified in part 15 of this ISP for initialising the FDCO, erasure of the display object and the initialisation of other control object contents. This could be part of the various page templates. Other methods should be considered. A VT-BREAK exchange could achieve the desired effect as could a VT-SWITCH-PROFILE exchange, both of these leaving the VT environment in a known initial state.

As noted in B.8, the initialisation sequence should include a SACO update with the value "keyboard-unlocked".

Copyright International Organization for Standardization
Provided by IHS under license with ISO
No reproduction or networking permitted without license from IHS
Not for Resale

B.5 Secure storage at the terminal

The procedure described in this annex for committed printing relies on there being secure storage available at the terminal. This is to hold the print image as bound data whilst the terminal and its host are in the ready state. The secure storage must survive loss of the VT-association which the CCA does not.

A number of commands are made available for the Printer CO for management of this secure storage:

– **copy** - copy the print image from the print region of the display object to secure storage.

– **print** - print from the secure storage - this also serves to clear the secure storage area. An attempt to print from secure storage when empty results in no action. This requirement will stop more than one print occurring of the same print image.

– **clear** - clear secure storage.

B.6 Transaction initialisation

In this scenario, it should be noted that from an OSI TP point of view, the terminal system does not act as transaction initiator, although in the literal sense, in many cases, the action of the operator at a terminal may cause a transaction to start. It is assumed that the TPSUI in the gateway partakes in a VT dialogue. This TPSUI may be one component of a larger distributed application. At some point the distributed application decides that a transaction should start. Figure B.1 shows the case where the gateway TPSUI is a leaf in a specific transaction.

B.7 Normal commitment

Figure B.2 illustrates the TP and VT primitive interactions during normal commitment for intermediate or leaf nodes.

During the active phase up to the receipt of the TP-PREPARE-ind primitive, print data received by this TPSUI, or generated by it, is passed to the terminal to be held in the print region of the display object.

NOTE – If the VT is attached to the root TPSUI, the TP-PREPARE-ind does not occur.

At the end of the active phase for S-mode VT profiles (forms or paged), WAVAR (VT token) would naturally reside with the gateway TPSUI since a form would have been filled in.

During the first phase of commitment up to the issuing of the TP-COMMIT-req primitive, the Printer CO is updated with the copy command. The issuance of the VT-DELIVER-req primitive ensures delivery of the PCO update and receipt of the VT-ACK-RECEIPT-ind primitive signals that the copy has completed (i.e. the bound data at the terminal has been secured and the terminal is in a position to print the information which has been stored). The TP-COMMIT-req primitive must not be issued by the gateway TPSUI until the VT-ACK-RECEIPT-ind primitive has been received.

During the second phase of commitment up to the issuing of the TP-DONE-req primitive, the Printer CO is updated with the print command. The issuance of the VT-DELIVER-ind primitive ensures delivery of the PCO update and receipt of the VT-ACK-RECEIPT signals that the print has completed (i.e. the terminal bound data has been released). This sequence may also occur during recovery scenarios and in TP dialogue loss scenarios when commitment can be decided. The VT primitive sequence occurs before the issuing of the TP-DONE-req primitive. The TP-DONE-req primitive may only be issued by the gateway TPSUI after it has received the VT-ACK-RECEIPT primitive and after it has released its own bound data.

Copyright International Organization for Standardization
Provided by IHS under license with ISO
No reproduction or networking permitted without license from IHS
Not for Resale

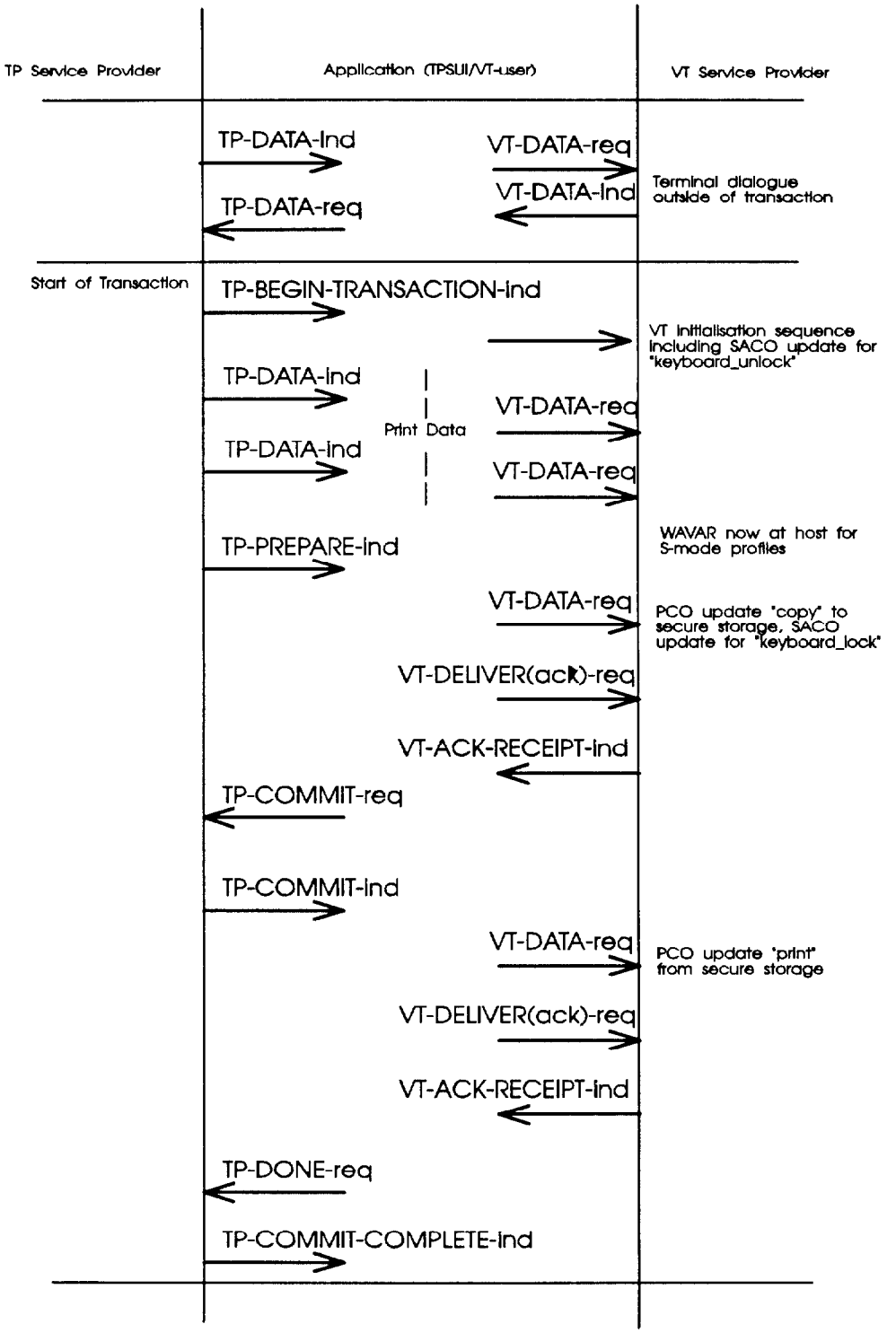

Figure B.2 - Printing with normal commitment

Copyright International Organization for Standardization
Provided by IHS under license with ISO
No reproduction or networking permitted without license from IHS
Not for Resale

B.8 Rollback

During rollback processing initiated by issuing of a TP-ROLL-BACK-req or receipt of any rollback initiating primitives, a VT-BREAK sequence is initiated to reset the VT-environment. The VT-BREAK interaction is followed by a Printer CO update with the clear command. The issuance of the VT-DELIVER-req primitive ensures delivery of the PCO update and receipt of the VT-ACK-RECEIPT-ind primitive signals that the terminal has completed rollback (i.e. the print information has been discarded. The VT environment is then ready for the start of the next transaction. Figure B.3 illustrates rollback during phase 1 of commitment. The TP-DONE-req primitive may only be issued by the gateway TPSUI after it has received the VT-ACK-RECEIPT primitive and after it has released its own bound data into its initial state.

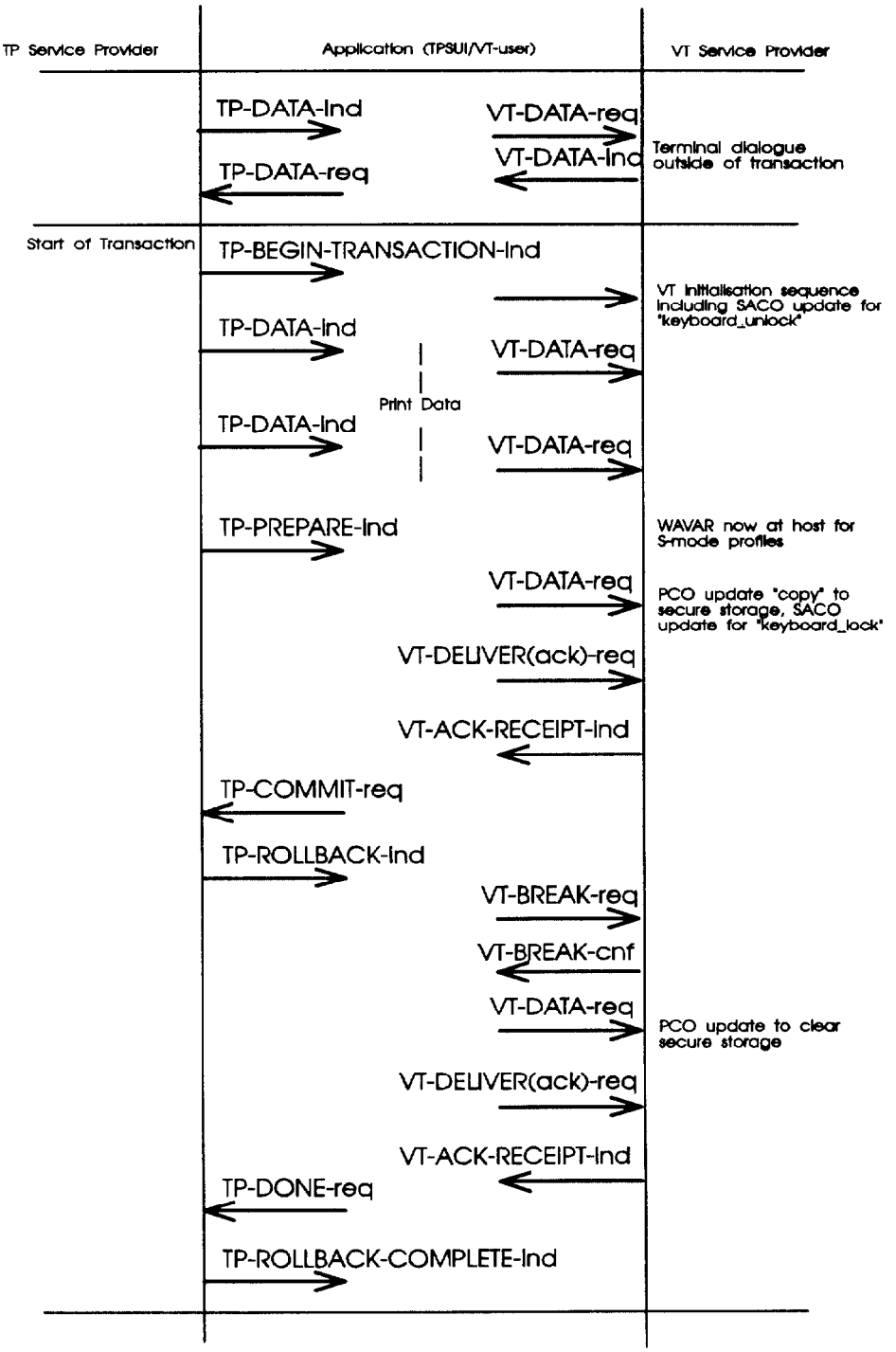

Figure B.3 - Example of rollback

Copyright International Organization for Standardization
Provided by IHS under license with ISO
No reproduction or networking permitted without license from IHS
Not for Resale

Rollback may be initiated by the VT as the result of operator action. This could be achieved in a number of ways:

- by a VT-BREAK exchange;

- by a logical keystroke resulting in a STCO or UTCO update;

- by some other application defined command sequence.

Where rollback may be initiated by the terminal via a VT-BREAK exchange or via a logical keystroke depression, it is important that this be inhibited during the second phase of commitment. This is especially important with the VT-BREAK exchange since this causes a complete reset of the VT environment and causes destruction of any protocol in transit. This may be achieved by associating semantics with the two update values of the Sequence Application control object - keyboard_locked and keyboard_unlocked. Updating the SACO with the value keyboard_locked should inhibit the initiation of a VT-BREAK exchange and should be done when the PCO update occurs to copy the print image to secure storage during the first phase of commitment. A SACO update with the value keyboard_unlocked should occur during the VT environment initialisation sequence at the start of a transaction. A VT-BREAK interaction initiated by the host application must not cause the keyboard to become unlocked. Figure B.3 illustrates rollback initiated by the terminal.

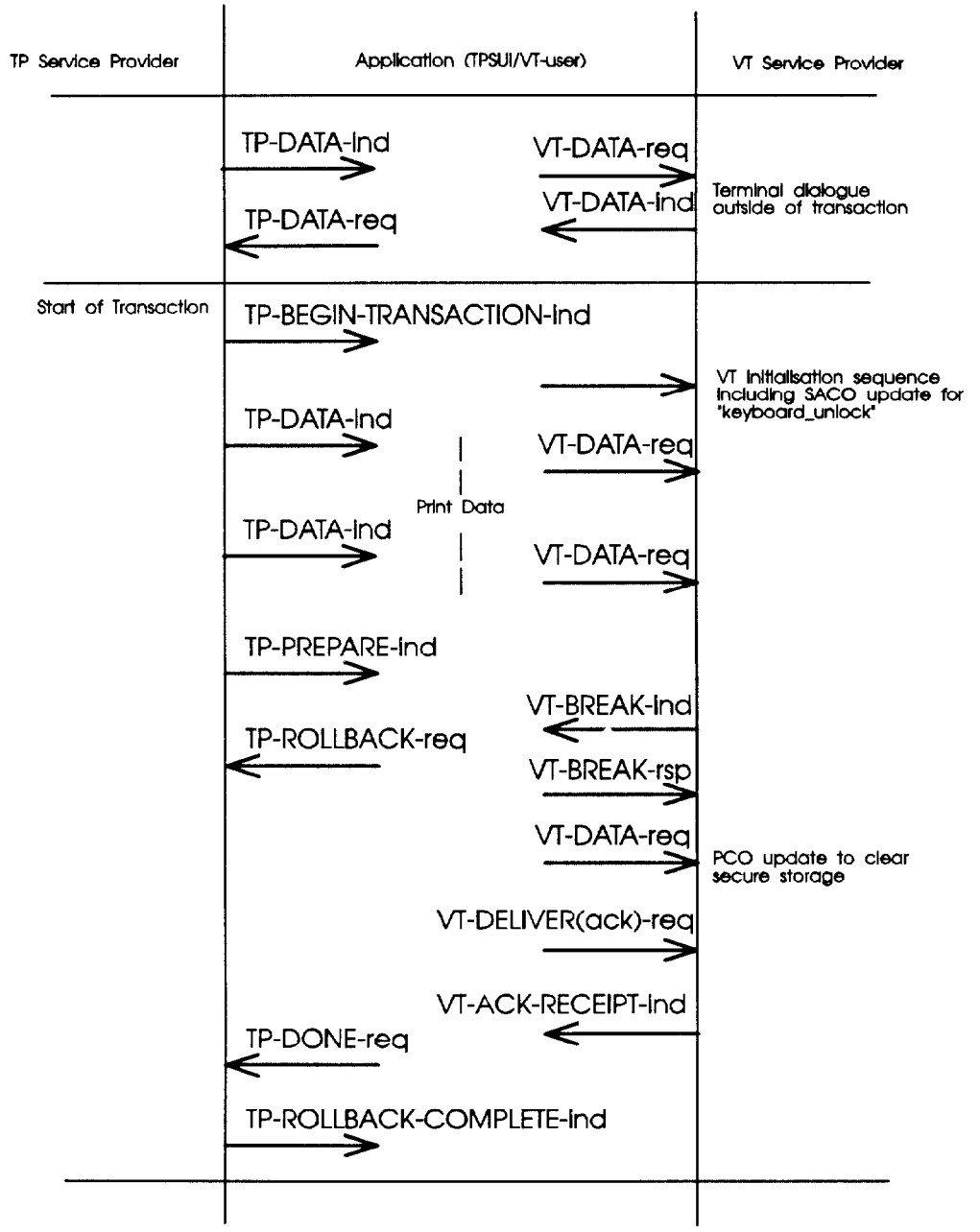

Figure B.4 - Rollback initiated by the terminal

Copyright International Organization for Standardization
Provided by IHS under license with ISO
No reproduction or networking permitted without license from IHS
Not for Resale

B.9 Failure Cases

A number of failure cases need to be considered:

– Failure of the dialogue from the attached host to its superior node in the OSI TP domain.

Actions resulting from dialogue failure are defined in the OSI TP standard. Three situations arise, no special processing is required by the TPSUI, local commitment is caried out or local rollback is carried out. The last two cases are catered for adequately in B.4 and B.5 respectively. In these cases the final interaction with the terminal as described for commitment or for rollback will take place. At the terminal, commitment will result in printing from secure storage whilst rollback will result in secure storage being cleared.

– Failure of the attached host node.

Here, it is assumed that the VT-association is lost. When communications are re-established, secure data at the host should enable subsequent action to be established. This will result in one of three actions identified for dialogue failure above.

– Failure of the VT association or of the VT itself.

When communications are reestablished, the host application takes action depending on when the failure occurred. If it occurred at any time up to but not including issuing the TP-COMMIT-req (in the active phase), then rollback is needed. If failure occurred after the issuing of TP-COMMIT-req and up to but not including issuing TP-DONE-req, then commitment is needed. If failure occurred after issuing TP-DONE-req and up to and including receipt of TP-COMMIT-COMPLETE, then no action is necessary. The action for commitment and rollback is as defined for dialogue failure above.

Copyright International Organization for Standardization
Provided by IHS under license with ISO
No reproduction or networking permitted without license from IHS
Not for Resale

© ISO/IEC

ICS 35.100

Descriptors: data processing, information interchange, network interconnection, open systems interconnection, control procedures, definitions, international registers.

Price based on 13 pages

Copyright International Organization for Standardization
Provided by IHS under license with ISO
No reproduction or networking permitted without license from IHS

Not for Resale