INTERNATIONAL STANDARD

ISO/IEC 10089

First edition
1991-05-01

Information technology — 130 mm rewritable optical disk cartridge for information interchange

Technologies de l'information — Cartouches de disques optiques réutilisables à diamètre 130 mm *pour l'échange d'information*

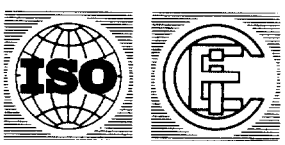

Reference number
ISO/IEC 10089 : 1991 (E)

Copyright International Organization for Standardization
Provided by IHS under license with ISO
No reproduction or networking permitted without license from IHS

Not for Resale

Contents

			Page
1	Scope		1
2	Conformance		1
3	Normative references		1
4	Conventions and notations		1
5	List of acronyms		2
6	Definitions		2
	6.1	case	2
	6.2	Clamping Zone	2
	6.3	Control Track	2
	6.4	cyclic redundancy check (CRC)	2
	6.5	defect management	2
	6.6	disk reference plane	2
	6.7	entrance surface	2
	6.8	error correction code (ECC)	2
	6.9	format	2
	6.10	hub	3
	6.11	interleaving	3
	6.12	Kerr rotation	3
	6.13	land and groove	3
	6.14	mark	3
	6.15	optical disk	3
	6.16	optical disk cartridge (ODC)	3
	6.17	polarization	3
	6.18	pre-recorded mark	3
	6.19	read power	3
	6.20	recording layer	3

© ISO/IEC 1991
All rights reserved. No part of this publication may be reproduced or utilized in any form or by any means, electronic or mechanical, including photocopying and microfilm, without permission in writing from the publisher.
ISO/IEC Copyright Office • Case postale 56 • CH-1211 Genève 20 • Switzerland
Printed in Switzerland

Copyright International Organization for Standardization
Provided by IHS under license with ISO
No reproduction or networking permitted without license from IHS
Not for Resale

6.21 Reed-Solomon code 3
6.22 rewritable optical disk 3
6.23 spindle 3
6.24 substrate 3
6.25 track 3
6.26 track pitch 3
6.27 write-inhibit hole 3

7 General description 4

8 Environments 4

8.1 Testing environment 4
8.2 Operating environment 4
8.3 Storage environment 4

8.3.1 Short-term storage 5
8.3.2 Long-term storage 5

8.4 Transportation 5

9 Safety requirements 5

10 Dimensional and mechanical characteristics of the case 5

10.1 General 5
10.2 Case drawings 5
10.3 Sides, reference axes and reference planes 6

10.3.1 Relationship of Sides A and B 6
10.3.2 Reference axes and case reference planes 6

10.4 Materials 6
10.5 Mass 6
10.6 Overall dimensions (see figure 3) 6
10.7 Location hole (see figure 3) 7
10.8 Alignment hole (see figure 3) 7
10.9 Surfaces on reference planes P (see figures 4 and 4a) 8
10.10 Insertion slots and detent features (see figure 5) 9
10.11 Gripper slots (see figure 6) 9
10.12 Write-inhibit holes (see figure 7) 10
10.13 Media sensor holes (see figure 8) 10
10.14 Head and motor window (see figure 10) 11
10.15 Shutter (see figure 11) 11
10.16 Slot for shutter opener (see figure 11) 11
10.17 Shutter sensor notch (see figure 9) 12
10.18 User label areas (see figure 13) 12

11 Dimensional and physical characteristics of the disk 13

11.1 Dimensions of the disk 13

11.1.1 Outer diameter 13
11.1.2 Thickness 13

Copyright International Organization for Standardization
Provided by IHS under license with ISO
No reproduction or networking permitted without license from IHS
Not for Resale

11.1.3 Clamping zone (see figure 1) 13
11.1.4 Clearance zone 13

11.2 Mass 13
11.3 Moment of inertia 13
11.4 Imbalance 13
11.5 Axial deflection 13
11.6 Axial acceleration 13
11.7 Dynamic radial runout 13
11.8 Radial acceleration 14
11.9 Tilt 14

12 Drop test 14

13 Interface between disk and drive 14

13.1 Clamping technique 14
13.2 Dimensions of the hub (see figure 1) 14

13.2.1 Outer diameter of the hub 14
13.2.2 Height of the hub 14
13.2.3 Diameter of the centre hole 14
13.2.4 Height of the top of the centre hole at diameter D9 14
13.2.5 Centring length at diameter D9 15
13.2.6 Chamfer at diameter D9 15
13.2.7 Chamfer at diameter D8 15
13.2.8 Outer diameter of the magnetizable ring 15
13.2.9 Inner diameter of the magnetizable ring 15
13.2.10 Thickness of the magnetizable material 15
13.2.11 Position of the top of the magnetizable ring relative to the disk reference plane 15

13.3 Magnetizable material 15
13.4 Clamping force 15
13.5 Capture cylinder for the hub (see figure 12) 15
13.6 Disk position in the operating condition (see figure 12) 16

14 Characteristics of the substrate 31

14.1 Index of refraction 31
14.2 Thickness 31

15 Characteristics of the recording layer 31

15.1 Test conditions 31

15.1.1 General 31
15.1.2 Read conditions 31
15.1.3 Write conditions 32
15.1.4 Erase conditions 32

15.2 Baseline reflectance 33

15.2.1 General 33
15.2.2 Actual value 33

Copyright International Organization for Standardization
Provided by IHS under license with ISO
No reproduction or networking permitted without license from IHS Not for Resale

15.2.3 Requirement 33

15.3 Magneto-optical recording in the User Zone 33

15.3.1 Resolution 33
15.3.2 Imbalance of magneto-optical signal 34
15.3.3 Figure of merit for magneto-optical signal 34
15.3.4 Narrow-band signal-to-noise ratio 34
15.3.5 Cross-talk ratio 35
15.3.6 Ease of erasure 35

16. Features common to both formats 36

16.1 Track geometry 36

16.1.1 Track shape 36
16.1.2 Direction of rotation 36
16.1.3 Track pitch 36
16.1.4 Track number 36

16.2 Formatted Zone 36
16.3 Control tracks 37
16.4 Control Track PEP Zone 37

16.4.1 Recording in the PEP Zone 37
16.4.2 Cross-track loss 38
16.4.3 Format of the tracks of the PEP Zone 39

16.5 Control Track SFP Zones 42

16.5.1 Duplicate of the PEP information 43
16.5.2 Media information 43
16.5.3 System Information 51
16.5.4 Unspecified content 51

16.6 Requirements for interchange of a user-recorded cartridge 51

16.6.1 Requirements for reading 51
16.6.2 Requirements for writing and erasing 51

17 Format A 51

17.1 Track layout 51

17.1.1 Tracking 51
17.1.2 Characteristics of pre-recorded information 52

17.2 Sector format 54

17.2.1 Sector Mark (SM) 56
17.2.2 VFO areas 56
17.2.3 Address Mark (AM) 56
17.2.4 ID and CRC 56
17.2.5 Postamble (PA) 57
17.2.6 Offset Detection Flag (ODF) 57
17.2.7 Gap 57
17.2.8 Flag 57
17.2.9 Auto Laser Power Control (ALPC) 57

Copyright International Organization for Standardization
Provided by IHS under license with ISO
No reproduction or networking permitted without license from IHS
Not for Resale

17.2.12 Buffer 58

17.3 Recording Code 58

17.4 Defect management 59

17.4.1 Media initialization 59

17.4.2 Write and read procedure 60

17.4.3 Layout of the User Zone 60

17.4.4 Summary of the location of the zones on the disk 64

18 Format B 66

18.1 Track layout 66

18.1.1 Servo format 66

18.1.2 Properties of pre-recorded signals 67

18.2 Data structure 67

18.2.1 Track format 67

18.2.2 Sector format 67

18.2.3 Error detection and correction 69

18.2.4 Recording method 70

18.2.5 Defect management 73

Annexes

A Optical systems for measuring write, read and erase characteristics 79

B Definition of write and erase pulse width 81

C Measurement of figure of merit 82

D Values to be implemented in future standards 83

E Pointer fields 84

F CRC for ID fields 85

G Interleave, CRC, ECC, Resync for the Data field 86

H Sector retirement guidelines 93

I Office environment 93

J Transportation 94

K Requirements for interchange 95

Copyright International Organization for Standardization
Provided by IHS under license with ISO
No reproduction or networking permitted without license from IHS Not for Resale

FOREWORD

ISO (the International Organization for Standardization) and IEC (the International Electrotechnical Commission) form the specialized system for worldwide standardization. National bodies that are members of ISO or IEC participate in the development of International Standards through technical committees established by the respective organization to deal with particular fields of technical activity. ISO and IEC technical committees collaborate in fields of mutual interest. Other international organizations, governmental and non-governmental, in liaison with ISO and IEC, also take part in the work.

In the field of information technology, ISO and IEC have established a joint technical committee, ISO/IEC JTC1. Draft International Standards adopted by the joint technical committee are circulated to national bodies for voting. Publication as an International Standard requires approval by at least 75 % of the national bodies casting a vote.

International Standard ISO/IEC 10089 was prepared by Joint Technical Committee ISO/IEC JTC 1, *Information technology*.

Annexes A, B, C, E, F, G and K form an integral part of this International Standard. Annexes D, H, I and J are for information only.

Copyright International Organization for Standardization
Provided by IHS under license with ISO
No reproduction or networking permitted without license from IHS
Not for Resale

INTRODUCTION

This International Standard specifies the characteristics of 130 mm optical disk cartridges (ODC) of the type providing for information to be written, read and erased many times using the magneto-optical effect.

This International Standard together with a standard for volume and file structure provides for full data interchange between data processing systems.

Copyright International Organization for Standardization
Provided by IHS under license with ISO
No reproduction or networking permitted without license from IHS
Not for Resale

Information technology — 130 mm rewritable optical disk cartridge for information interchange

1 Scope

This International Standard specifies

- definitions of the essential concepts;
- the environment in which the characteristics are to be tested;
- the environments in which the cartridge are to be operated and stored;
- the mechanical, physical and dimensional characteristics of the case and of the optical disk;
- the magneto-optical characteristics and the recording characteristics for recording the information, for reading the information and for erasing it many times, so as to provide physical interchangeability between data processing systems;
- two formats for the physical disposition of the tracks and sectors, the error correction codes, the modulation methods used for recording and the quality of the recorded signals.

2 Conformance

A 130 mm rewritable optical disk cartridge is in conformance with this International Standard if it meets all the mandatory requirements of clauses 8 to 16, and either those of clause 17 or those of clause 18.

3 Normative references

The following standards contain provisions which, through reference in this text, constitute provisions of this International Standard. At the time of publication, the editions indicated were valid. All standards are subject to revision, and parties to agreements based on this International Standard are encouraged to investigate the possibility of applying the most recent editions of the standards listed below. Members of IEC and ISO maintain registers of currently valid international standards.

ISO 683-13:1986, *Heat treatable steels, alloy steels and free-cutting steels - Wrought stainless steels.*

IEC 950:1986, *Safety of information technology equipment including electrical business equipment*

4 Conventions and notations

The following conventions and notations apply in this International Standard.

a) In each field the information is recorded so that the most significant byte (byte 0) is recorded first. Within each byte the least significant bit is numbered bit 0, the most significant bit (i.e. bit 7 in an 8-bit byte) is recorded first. This order of recording applies also to the data input of the error-correcting codes, to the cyclic redundancy code, and to their code output.

b) Unless otherwise stated, numbers are expressed in binary notation. Where hexadecimal notation is used, the hexadecimal digits are shown between parentheses.

c) bit combinations are shown with the most significant bit to the left.

d) Negative values are expressed in TWO's complement notation.

e) The setting of bits is denoted by ZERO and ONE.

Copyright International Organization for Standardization
Provided by IHS under license with ISO
No reproduction or networking permitted without license from IHS
Not for Resale

f) The name of entities, e.g. specific tracks, fields, etc., is shown with a capital initial.

5 List of acronyms

ALPC	Auto Laser Power Control
AM	Address Mark
CAV	Constant Angular Velocity
CRC	Cyclic Redundancy Code
DDS	Disk Definition Structure
DMA	Defect Management Area
DMP	Defect Management Pointers
DTM	Defect Management Track
ECC	Error Correction Code
EDAC	Error Detection and Correction Code
ID	Identifier
LBA	Logical Block Address
ODC	Optical Disk Cartridge
ODF	Offset Detection Flag
PA	Postamble
PDL	Primary Defect List
PEP	Phase-Encoded Part of the Control Tracks
RLL(2,7)	Run Length Limited (code)
R-S	Reed-Solomon (code)
R-S/LDC	Reed-Solomon Long Distance Code
SDL	Secondary Defect List
SFP	Standard Formatted Part of the Control Tracks
SM	Sector Mark
VFO	Variable Frequency Oscillator
4/15 (Modulation)	Conversion table of 8-bit bytes to 15-Channel bit representation on the disk

6 Definitions

For the purposes of this International Standard, the definitions given in ISO/IEC 9171-1 and the following definitions apply.

6.1 **case** : The housing for an optical disk, that protects the disk and facilitates disk interchange.

6.2 **Clamping Zone** : The annular part of the disk within which the clamping force is applied by the clamping device. [ISO/IEC 9171-1]

6.3 **Control Track** : A track containing the information on media parameters and format necessary for writing, reading and erasing the remaining tracks on the optical disk. [ISO/IEC 9171-1]

6.4 **cyclic redundancy check (CRC)** : A method for detecting errors in data. [ISO/IEC 9171-1]

6.5 **defect management** : A method for handling the defective areas on the disk. [ISO/IEC 9171-1]

6.6 **disk reference plane** : A plane defined by the perfectly flat annular surface of an ideal spindle onto which the clamping zone of the disk is clamped, and which is normal to the axis of rotation. [ISO/IEC 9171-1]

6.7 **entrance surface** : The surface of the disk on to which the optical beam first impinges. [ISO/IEC 9171-1]

6.8 **error correction code (ECC)** : An error-detecting code designed to correct certain kinds of errors in data. [ISO/IEC 9171-1]

6.9 **format** : The arrangement or layout of the data on a medium. [ISO/IEC 9171-1]

Copyright International Organization for Standardization
Provided by IHS under license with ISO
No reproduction or networking permitted without license from IHS
Not for Resale

6.10 **hub** : The central feature on the disk which interacts with the spindle of the disk drive to provide radial centring and the clamping force. [ISO/IEC 9171-1]

6.11 **interleaving** : The process of allocating the physical sequence of units of data so as to render the data more immune to burst errors. [ISO/IEC 9171-1]

6.12 **Kerr rotation** : The rotation of the plane of polarization of an optical beam upon reflection from the recording layer as caused by the magneto-optical Kerr effect.

6.13 **land and groove** : A trench-like feature of the disk, applied before the recording of any information, and used to define the track location. The groove is located nearer to the entrance surface than the land with which it is paired to form a track. [ISO/IEC 9171-1]

6.14 **mark** : A feature of the recording layer which may take the form of a magnetic domain, a pit, or any other type or form that can be sensed by the optical system. The pattern of marks represents the data on the disk.

6.15 **optical disk** : A disk that will accept and retain information in the form of marks in a recording layer, that can be read with an optical beam. [ISO/IEC 9171-1]

6.16 **optical disk cartridge (ODC)**: A device consisting of a case containing an optical disk. [ISO/IEC 9171-1]

6.17 **polarization** : The direction of polarization of an optical beam is the direction of the electric vector of the beam.

NOTE 1 The plane of polarization is the plane containing the electric vector and the direction of propagation of the beam. The polarization is right-handed when to an observer looking in the direction of propagation of the beam, the end-point of the electric vector would appear to describe an ellipse in the clockwise sense.

6.18 **pre-recorded mark** : A mark so formed as to be unalterable by magneto-optical means.

6.19 **read power** : The read power is the optical power, incident at the entrance surface of the disk, used when reading.

NOTE 2 It is specified as a maximum power that may be used without damage to the written data. Lower power may be used providing that the signal-to-noise ratio and other requirements of this International Standard are met.

6.20 **recording layer** : A layer of the disk on, or in, which data is written during manufacture and/or use. [ISO/IEC 9171-1]

6.21 **Reed-Solomon code** : An error detection and/or correction code which is particularly suited to the correction of errors which occur in bursts or are strongly correlated. [ISO/IEC 9171-1]

6.22 **rewritable optical disk** : An optical disk in which the data in specified areas can be rewritten by an optical beam.

6.23 **spindle** : The part of the disk drive which contacts the disk and/or hub. [ISO/IEC 9171-1]

6.24 **substrate** : A transparent layer of the disk, provided for mechanical support of the recording layer, through which the optical beam accesses the recording layer.

6.25 **track** : The path which is followed by the focus of the optical beam during one revolution of the disk. [ISO/IEC 9171-1]

6.26 **track pitch** : The distance between adjacent track centrelines, measured in a radial direction. [ISO/IEC 9171-1]

6.27 **write-inhibit hole** : A hole in the case which, when detected by the drive to be open, inhibits both write and erase operations.

Copyright International Organization for Standardization
Provided by IHS under license with ISO
No reproduction or networking permitted without license from IHS
Not for Resale

7 General description

The optical disk cartridge which is the subject of this International Standard consists of a case containing an optical disk. An optical beam is used to write data to, or to read data from, or to erase data from, the disk using the magneto-optical Kerr effect.

The disk can be recorded either only on one side or on both sides.

The disk is intended for use in a drive with optical access from one side only. To gain access to the second side of a disk recordable on both sides, the cartridge must be reversed before insertion into the drive.

Typically a disk recordable on one side consists of a transparent layer acting as a substrate with a recording layer on one side and a hub on the other. The recording layer is accessed by an optical beam through the substrate. A disk recordable on both sides consists of two disks recordable on one side assembled together with the recording layers on the inside.

Other constructions are permitted but must have the same characteristics.

8 Environments

8.1 Testing environment

Unless otherwise specified, tests and measurements made on the ODC to check the requirements of this International Standard shall be carried out in an environment where the air immediately surrounding the ODC is within the following conditions.

Temperature	: 23 °C ± 2 °C
Relative humidity (RH)	: 45 % to 55 %
Atmospheric pressure	: 75 kPa to 105 kPa

Before testing, the ODC shall be conditioned in this environment for 48h minimum. No condensation on or in the ODC shall occur.

8.2 Operating environment

Optical disk cartridges used for data interchange shall be operated in an environment where the air immediately surrounding the ODC is within the following conditions.

Temperature	: 10 °C to 50 °C
Relative humidity	: 10 % to 80 %
Wet bulb temperature	: 29 °C max.
Atmospheric pressure	: 75 kPa to 105 kPa
Temperature gradient	: 10 °C /h max.
Relative humidity gradient	: 10 % /h max.
Magnetic field	: during loading and unloading of the cartridge the magnetic field strength at the recording layer shall not exceed 48 000 A/m.

No condensation on or in the ODC shall be allowed to occur.

If an ODC has been exposed during storage and/or transportation to conditions outside those specified in this clause, it shall be acclimatized in the operating environment for at least 2h before use. In the operating environment an ODC shall be capable of withstanding a thermal shock of up to 20 °C when inserted into, or removed from, the drive.

See also annex I.

8.3 Storage environment

Storage environment is the ambient condition to which the ODC without any additional protective enclosure is exposed when stored.

Copyright International Organization for Standardization
Provided by IHS under license with ISO
No reproduction or networking permitted without license from IHS
Not for Resale

8.3.1 Short-term storage

For a maximum period of 14 consecutive days the ODC shall not be exposed to environmental conditions outside those given below.

Temperature	: -20 °C to 55 °C
Relative humidity	: 5 % to 90 %
Wet bulb temperature	: 29 °C max.
Atmospheric pressure	: 75 kPa to 105 kPa
Temperature gradient	: 20 °C /h max.
Relative humidity gradient	: 20 % /h max.
Magnetic field	: The magnetic field strength in the volume of the cartridge shall nowhere exceed 48 000 A/m

No condensation on or in the ODC shall be allowed to occur.

8.3.2 Long-term storage

For a storage period longer than 14 days the optical disk cartridge shall not be exposed to environmental conditions outside those given below.

Temperature	: -10 °C to 50 °C
Relative humidity	: 10 % to 90 %
Wet bulb temperature	: 29 °C max.
Atmospheric pressure	: 75 kPa to 105 kPa
Temperature gradient	: 15 °C /h max.
Relative humidity gradient	: 10 % /h max.
Magnetic field	: The magnetic field strength in the volume of the cartridge shall nowhere exceed 48 000 A/m

No condensation on or in the ODC shall be allowed to occur.

8.4 Transportation

This International Standard does not specify requirements for transportation; guidance is given in annex J.

9 Safety requirements

The cartridge and its components shall satisfy the safety requirements of IEC 950, when used in its intended manner or in any foreseeable use in an information processing system.

10 Dimensional and mechanical characteristics of the case

10.1 General

The case shall be a rigid, protective enclosure of rectangular shape and include a shutter which uncovers access windows upon insertion into the drive, and automatically covers them upon removal from the drive. The case shall have means for positioning and identifying the cartridge, and write-inhibit holes.

The dimensions of the inside of the case are not specified in this International Standard, but are determined by the movement of the disk inside the case allowed by 13.5 and 13.6.

10.2 Case drawings

The case is represented schematically by the following drawings.

Figure 1 shows the hub dimensions.

Copyright International Organization for Standardization
Provided by IHS under license with ISO
No reproduction or networking permitted without license from IHS
Not for Resale

- Figure 2 shows a composite drawing of Side A of the case in isometric form, with the major features identified from Side A.
- Figure 3 shows the envelope of the case with respect to a location hole at the intersection of the X and Y axes and reference plane P.
- Figure 4 shows the surfaces S1, S2, S3 and S4 which establish the reference plane P.
- Figure 4a shows the details of surface S3.
- Figure 5 shows the details of the insertion slot and detent.
- Figure 6 shows the gripper slots, used for automatic handling.
- Figure 7 shows the write-inhibit holes.
- Figure 8 shows the media ID sensor holes.
- Figure 9 shows the shutter sensor notch.
- Figure 10 shows the head and motor window.
- Figure 11 shows the shutter opening features.
- Figure 12 shows the capture cylinder.
- Figure 13 shows the user label areas.

10.3 Sides, reference axes and reference planes

10.3.1 Relationship of Sides A and B

The features essential for physical interchangeability are represented in figure 2. When Side A of the cartridge faces upwards, Side A of the disk faces downwards. Sides A and B of the case are identical as far as the features given here are concerned. The description is given for one side only. References to Sides A and B can be changed to B or A respectively.

Only the shutter and the slot for the shutter opener, described in 10.14 and 10.15 are not identical for both sides of the case.

10.3.2 Reference axes and case reference planes

There is a reference plane P for each side of the case. Each reference plane P contains two orthogonal axes X and Y to which the dimensions of the case are referred. The intersection of the X and Y axes defines the centre of the location hole. The X axis extends through the centre of the alignment hole.

10.4 Materials

The case shall be constructed from any suitable materials such that it meets the requirements of this International Standard.

10.5 Mass

The mass of the case without the optical disk shall not exceed 150 g.

10.6 Overall dimensions (see figure 3)

The total length of the case shall be

$$L_1 = 153{,}0 \text{ mm} \pm 0{,}4 \text{ mm}$$

The distance from the top of the case to the reference axis X shall be

$$L_2 = 127{,}0 \text{ mm} \pm 0{,}3 \text{ mm}$$

The distance from the bottom of the case to the reference axis X shall be

Copyright International Organization for Standardization
Provided by IHS under license with ISO
No reproduction or networking permitted without license from IHS
Not for Resale

L_3 = 26,0 mm ± 0,3 mm

The total width of the case shall be

$$L_4 = 135{,}0 \text{ mm} \begin{matrix} +\ 0{,}0 \text{ mm} \\ -\ 0{,}6 \text{ mm} \end{matrix}$$

The distance from the left-hand side of the cartridge to the reference axis Y shall be

$$L_5 = 128{,}5 \text{ mm} \begin{matrix} +\ 0{,}0 \text{ mm} \\ -\ 0{,}5 \text{ mm} \end{matrix}$$

The distance from the right-hand side of the cartridge to the reference axis Y shall be

L_6 = 6,5 mm ± 0,2 mm

The width shall be reduced on the top by the radius

$R_1 = L_4$

originating from a point defined by L_5 and

L_7 = 101,0 mm ± 0,3 mm

The two corners of the top shall be rounded with a radius

R_2 = 1,5 mm ± 0,5 mm

and the two corners at the bottom with a radius

R_3 = 3,0 mm ± 1,0 mm

The thickness of the case shall be

L_8 = 11,00 mm ± 0,30 mm

The eight long edges of the case shall be rounded with a radius

R_4 = 1,0 mm max.

10.7 Location hole (see figure 3)

The centre of the location hole shall coincide with the intersection of the reference axes X and Y. It shall have a square form with a side length of

$$L_9 = 4{,}10 \text{ mm} \begin{matrix} +\ 0{,}00 \text{ mm} \\ -\ 0{,}06 \text{ mm} \end{matrix}$$

held to a depth of

L_{10} = 1,5 mm (i.e. typical wall thickness)

after which a cavity extends through to the alignment hole on the opposite side of the case.

The lead-in edges shall be rounded with a radius

R_5 = 0,5 mm max.

10.8 Alignment hole (see figure 3)

The centre of the alignment hole shall lie on reference axis X at a distance of

L_{11} = 122,0 mm ± 0,2 mm

from the reference axis Y.

The dimensions of the hole shall be

Copyright International Organization for Standardization
Provided by IHS under license with ISO
No reproduction or networking permitted without license from IHS
Not for Resale

$$L_{12} = 4{,}10 \text{ mm} \begin{matrix} + 0{,}00 \text{ mm} \\ - 0{,}06 \text{ mm} \end{matrix}$$

and

$$L_{13} = 5{,}0 \text{ mm} \begin{matrix} + 0{,}2 \text{ mm} \\ - 0{,}0 \text{ mm} \end{matrix}$$

held to a depth of L_{10}, after which a cavity extends through to the location hole on the opposite side of the case.

The lead-in edges shall be rounded with radius R_5.

10.9 Surfaces on reference planes P (see figures 4 and 4a)

The reference plane P for a side of the case shall contain four surfaces (S_1, S_2, S_3 and S_4) on that side of the case, specified as follows:

- Two circular surfaces S_1 and S_2.

Surface S_1 shall be a circular area centred around the square location hole and have a diameter of

$$D_1 = 9{,}0 \text{ mm min.}$$

Surface S_2 shall be a circular area centred around the rectangular alignment hole and have a diameter of

$$D_2 = 9{,}0 \text{ mm min.}$$

- Two elongated surfaces S_3 and S_4, that follow the contour of the cartridge and shutter edges.

Surfaces S_3 and S_4 are shaped symmetrically.

Surface S_3 shall be defined by two circular sections with radii

$$R_6 = 1{,}5 \text{ mm} \pm 0{,}1 \text{ mm}$$

with an origin given by

$$L_{14} = 4{,}0 \text{ mm} \pm 0{,}1 \text{ mm}$$

$$L_{15} = 86{,}0 \text{ mm} \pm 0{,}3 \text{ mm}$$

and

$$R_7 = 1{,}5 \text{ mm} \pm 0{,}1 \text{ mm}$$

with an origin given by

$$L_{16} = 1{,}9 \text{ mm} \pm 0{,}1 \text{ mm}$$

$$L_{17} = 124{,}5 \text{ mm} \pm 0{,}3 \text{ mm}$$

The arc with radius R_7 shall continue on the right hand side with radius

$$R_8 = 134{,}0 \text{ mm} \begin{matrix} + 0{,}2 \text{ mm} \\ - 0{,}7 \text{ mm} \end{matrix}$$

which is a dimension resulting from $L_5 + L_{14} + R_6$ with an origin given by L_5 and L_7. A straight, vertical line shall smoothly join the arc of R_6 to the arc of R_8.

The left-hand side of S_3 shall be bounded by radius

$$R_9 = 4{,}5 \text{ mm} \pm 0{,}3 \text{ mm}$$

Copyright International Organization for Standardization
Provided by IHS under license with ISO
No reproduction or networking permitted without license from IHS
Not for Resale

which is a dimension resulting from $L_{18} + L_{14} - R_6$ with an origin given by

L_{18} = 2,0 mm ± 0,1 mm

L_{19} = 115,5 mm ± 0,3 mm

The left-hand side of the boundary shall be closed by two straight lines. The first one shall smoothly join the arc of R_6 to the arc of R_9. The second one shall run from the left hand tangent of R_7 to its intersection with R_9. Along the left hand side of surface S_3 there shall be a zone to protect S_3 from being damaged by the shutter. In order to keep this zone at a minimum practical width

R_{10} = 4,1 mm max.

This radius originates from the same point as R_9.

10.10 Insertion slots and detent features (see figure 5)

The case shall have two symmetrical insertion slots with embedded detent features. The slots shall have a length of

L_{20} = 26,0 mm ± 0,3 mm

a width of

$$L_{21} = 6{,}0 \text{ mm} \begin{matrix} +\ 0{,}3 \text{ mm} \\ -\ 0{,}0 \text{ mm} \end{matrix}$$

and a depth of

L_{22} = 3,0 mm ± 0,1 mm

located

L_{23} = 2,5 mm ± 0,2 mm

from reference plane P.

The slots shall have a lead-in chamfer given by

L_{24} = 0,5 mm max.

L_{25} = 5,0 mm max.

The detent notch shall be a semi-circle of radius

R_{11} = 3,0 mm ± 0,2 mm

with the origin given by

L_{26} = 13,0 mm ± 0,3 mm

L_{27} = 2,0 mm ± 0,1 mm

10.11 Gripper slots (see figure 6)

The case shall have two symmetrical gripper slots with a depth of

L_{28} = 5,0 mm ± 0,3 mm

from the edge of the case and a width of

L_{29} = 6,0 mm ± 0,3 mm

The upper edge of a slot shall be

L_{30} = 12,0 mm ± 0,3 mm

above the bottom of the case.

Copyright International Organization for Standardization
Provided by IHS under license with ISO
No reproduction or networking permitted without license from IHS
Not for Resale

10.12 Write-inhibit holes (see figure 7)

Sides A and B shall each have a write-inhibit hole. The case shall include a device for opening and closing each hole. The hole at the left-hand side of Side A of the case, is the write-inhibit hole for Side A of the disk. The protected side of the disk shall be made clear by inscriptions on the case or by the fact that the device for Side A of the disk can only be operated from Side A of the case.

When writing and erasing on Side A of the disk are not allowed, the write-inhibit hole shall be open all through the case. It shall have a diameter

D_3 = 4,0 mm min.

Its centre shall be specified by

L_{31} = 8,0 mm ± 0,2 mm

L_{32} = 111,0 mm ± 0,3 mm

on Side A of the case.

When writing and erasing are allowed on Side A of the disk, the write-inhibit hole shall be closed on Side A of the case, at a depth of typically L_{10}, i.e. the wall thickness of the case. In this state, the opposite side of the same hole, at Side B of the case, shall be closed and not recessed from the reference plane P of Side B of the case by more than

L_{33} = 0,5 mm

The opposite side of the write-inhibit hole for protecting Side B of the disk shall have a diameter D_3. Its centre shall be specified by L_{31} and

L_{34} = 11,0 mm ± 0,2 mm

on Side A of the case.

10.13 Media sensor holes (see figure 8)

There shall be two sets of four media sensor holes. The set of holes at the lower left hand corner of Side A of the case pertains to Side A of the disk. The holes shall extend through the case, and have a diameter of

$$D_4 = 4{,}0 \text{ mm} \begin{matrix} + \text{ 0,3 mm} \\ - \text{ 0,0 mm} \end{matrix}$$

the positions of their centres shall be specified by L_{32}, L_{34} and

L_{35} = 19,5 mm ± 0,2 mm
L_{36} = 17,0 mm ± 0,2 mm
L_{37} = 23,0 mm ± 0,2 mm
L_{38} = 29,0 mm ± 0,2 mm
L_{39} = 93,0 mm ± 0,3 mm
L_{40} = 99,0 mm ± 0,3 mm
L_{41} = 105,0 mm ± 0,3 mm

A hole is deemed to be open when there is no obstruction in this hole over a diameter D_4 all through the case.

A hole for Side A of the disk is deemed to be closed, when the hole is closed on both Side A and Side B of the case. The closure shall be recessed from reference plane P by

L_{42} = 0,1 mm max.

The holes are numbered consecutively from 1 to 4. Hole No. 1 is the hole closest to the left hand edge of the case. The optical disk cartridge according to this International Standard uses only

Copyright International Organization for Standardization
Provided by IHS under license with ISO
No reproduction or networking permitted without license from IHS
Not for Resale

hole No. 2. The other three holes shall be in the closed state. The function of hole No. 2 is to indicate whether the cartridge as loaded in the drive can be operated. When the hole is closed the cartridge is operable, when it is open the cartridge is not operable.

10.14 Head and motor window (see figure 10)

The case shall have a window on each side to enable the optical head and the motor to access the disk. The dimensions are referenced to a centreline, located at a distance of

L_{46} = 61,0 mm ± 0,2 mm

to the left of reference axis Y.

The width of the head access shall be

L_{47} = 20,00 mm min.

L_{48} = 20,00 mm min.

and its height shall extend from

L_{49} = 118,2 mm min. to

L_{50} = 57,0 mm max.

The four inside corners shall be rounded with a radius of

R_{12} = 3,0 mm max.

The motor access has a diameter of

D_5 = 35,0 mm min.

and its centre shall be defined by L_{46} and

L_{51} = 43,0 mm ± 0,2 mm

10.15 Shutter (see figure 11)

The case shall have a spring-loaded, unidirectional shutter with an optional latch, designed to completely cover the head and motor windows when closed. A shutter movement of 41,5 mm minimum shall be sufficient to ensure that the head and motor window is opened to the minimum size specified in 10.14. The shutter shall be free to slide in a recessed area of the case in such a way as to ensure that the overall thickness shall not exceed L_8. The spring shall be sufficiently strong to close a free-sliding shutter, irrespective of the orientation of the cartridge.

The shutter opening force shall be 3 N max.

The right-hand side of the top of the shutter shall have a lead-in ramp with an angle

A_2 = 25° max.

The distance from the reference planes P to the nearest side of the ramp shall be

L_{52} = 3,0 mm max.

10.16 Slot for shutter opener (see figure 11)

The shutter shall have only one slot in which the shutter opener of the drive can engage to open the shutter. The slot shall be dimensioned as follows:

When the shutter is closed, the vertical edge used to push the shutter open shall be located at a distance of

L_{53} = 34,5 mm ± 0,5 mm

from reference axis Y on Side B of the case.

The length of the slot shall be

Copyright International Organization for Standardization
Provided by IHS under license with ISO
No reproduction or networking permitted without license from IHS
Not for Resale

L_{54} = 4,5 mm ± 0,1 mm

and the angle of the lead-out ramp shall be

A_3 = 52,5° ± 7,5°.

The depth of the slot shall be

L_{55} = 3,5 mm ± 0,1 mm

The width of the slot from the reference plane P of Side B of the case shall be

$$L_{56} = 6{,}0 \text{ mm} \begin{matrix} + \ 0{,}5 \text{ mm} \\ - \ 0{,}0 \text{ mm} \end{matrix}$$

If a shutter latch is employed, the distance between the latch and reference plane P of Side B of the case shall be

L_{57} = 3,0 mm max.

10.17 Shutter sensor notch (see figure 9)

The shutter sensor notch is used to ensure that the shutter is fully open after insertion of the optical disk cartridge into the drive. Therefore, the notch shall be exposed only when the shutter is fully open.

The dimensions shall be

L_{43} = 3,5 mm ± 0,2 mm

L_{44} = 71,0 mm ± 0,3 mm and

$$L_{45} = 9{,}0 \text{ mm} \begin{matrix} + \ 0{,}0 \text{ mm} \\ - \ 2{,}0 \text{ mm} \end{matrix}$$

The notch shall have a lead-out ramp with an angle

A_1 = 45° ± 2°

10.18 User label areas (see figure 13)

The case shall have the following minimum areas for user labels:

- on Side A and Side B: 35,0 mm x 65,0 mm
- on the bottom side: 6,0 mm x 98,0 mm

These areas shall be recessed by 0,2 mm min. Their positions are specified by the following dimensions and relations between dimensions (see figure 13).

L_{61}	= 4,5 mm min.
$L_{62} - L_{61}$	= 65,0 mm min.
$L_{64} - L_{63}$	= 35,0 mm min.
L_{65}	= 4,5 mm min.
$L_{66} - L_{65}$	= 65,0 mm min.
$L_{67} + L_{68}$	= 35,0 mm min.
$L_8 - L_{71} - L_{72}$	= 6,0 mm min.
$L_4 - L_{69} - L_{70}$	= 98,0 mm min.

Copyright International Organization for Standardization
Provided by IHS under license with ISO
No reproduction or networking permitted without license from IHS
Not for Resale

11 Dimensional and physical characteristics of the disk

11.1 Dimensions of the disk

11.1.1 Outer diameter

The outer diameter of the disk shall be 130,0 mm nominal. The tolerance is determined by the movement of the disk inside the case allowed by 13.5 and 13.6.

11.1.2 Thickness

The total thickness of the disk outside the hub area shall be 3,20 mm max.

11.1.3 Clamping zone (see figure 1)

The outer diameter of the zone shall be

D_6 = 35,0 mm min.

The inner diameter of the zone shall be

D_7 = 27,0 mm max.

11.1.4 Clearance zone

Within the zone defined by the outer diameter of the clamping zone (D_6) and the inner diameter of the Reflective Zone (see 16.2) there shall be no projection from the disk reference plane in the direction of the optical system of more than 0,2 mm.

11.2 Mass

The mass of the disk shall not exceed 120 g.

11.3 Moment of inertia

The moment of inertia of the disk shall not exceed 0,22 g.m^2.

11.4 Imbalance

The imbalance of the disk shall not exceed 0,01 g.m.

11.5 Axial deflection

The deviation of any point of the recording layer from its nominal position, in a direction normal to the disk reference plane, shall not exceed ± 0,30 mm for rotational frequencies of the disk up to 30 Hz. The deviation shall be measured by the optical system defined in 15.1.1 and 15.1.2

The nominal position of the recording layer with respect to the disk reference plane is determined by the nominal thickness of the substrate and its index of refraction.

11.6 Axial acceleration

The acceleration of the recording layer along any fixed line normal to the disk reference plane shall not exceed 20 m/s^2 in a bandwidth from 30 Hz to 1,5 kHz for a rotational frequency of the disk of 30,0 Hz ± 0,3 Hz. The acceleration shall be measured by the optical system defined in 15.1.1 and 15.1.2.

11.7 Dynamic radial runout

The difference between the maximum and the minimum distance of any track from the axis of rotation, measured along a fixed radial line over one revolution of the disk, shall not exceed 50 μm, as measured by the optical system, for rotational frequencies of the disk up to 30 Hz.

Copyright International Organization for Standardization
Provided by IHS under license with ISO
No reproduction or networking permitted without license from IHS
Not for Resale

11.8 Radial acceleration

The acceleration of any track along a fixed radial line shall not exceed 6 m/s^2 in a bandwidth from 30 Hz to 1,5 kHz, as measured by the optical system, at a rotational frequency of the disk of 30,0 Hz ± 0,3 Hz.

11.9 Tilt

The tilt angle, defined as the angle which the normal to the entrance surface, averaged over a circular area of 1 mm diameter, makes with the normal to the disk reference plane, shall not exceed 5 mrad in the operating environment.

12 Drop test

The optical disk cartridge shall withstand dropping on each surface and on each corner from a height of 760 mm on to a concrete floor covered with a vinyl layer 2 mm thick. The cartridge shall withstand all such impacts without any functional failure.

13 Interface between disk and drive

13.1 Clamping technique

Radial positioning of the optical disk shall be provided by the centring of the axle of the spindle in the centre hole of the hub.

The turntable of the drive spindle shall support the disk in the clamping zone, determining the axial position of the disk in the case.

A clamping force shall be provided by the attraction between magnets in the spindle and a magnetizable ring in the hub.

13.2 Dimensions of the hub (see figure 1)

13.2.1 Outer diameter of the hub

This diameter shall be

$$D_8 = 25{,}0 \text{ mm} \begin{matrix} +\ 0{,}0 \text{ mm} \\ -\ 0{,}2 \text{ mm} \end{matrix}$$

13.2.2 Height of the hub

This height shall be

$$h_1 = 2{,}2 \text{ mm} \begin{matrix} +\ 0{,}0 \text{ mm} \\ -\ 0{,}2 \text{ mm} \end{matrix}$$

13.2.3 Diameter of the centre hole

The diameter of the centre hole shall be

$$D_9 = 4{,}004 \text{ mm} \begin{matrix} +\ 0{,}012 \text{ mm} \\ -\ 0{,}000 \text{ mm} \end{matrix}$$

13.2.4 Height of the top of the centre hole at diameter D_9

The height of the top of the centre hole at diameter D_9, measured above the disk reference plane, shall be

$$h_2 = 2{,}0 \text{ mm min.}$$

Copyright International Organization for Standardization
Provided by IHS under license with ISO
No reproduction or networking permitted without license from IHS
Not for Resale

13.2.5 Centring length at diameter D_9

This length shall be

h_3 = 0,5 mm min.

The hole shall have a diameter larger than, or equal to, D_9 between the centring length and the disk reference plane. The hole shall extend through the substrate.

13.2.6 Chamfer at diameter D_9

The height of the outer chamfer of the centre hole of the hub shall be

h_4 = 0,2 mm max.

The angle of the chamfer shall be 45°, or a corresponding full radius shall be used.

13.2.7 Chamfer at diameter D_8

The height of the chamfer at the rim of the hub shall be

$$h_5 = 0{,}2 \text{ mm} \begin{matrix} + 0{,}2 \text{ mm} \\ - 0{,}0 \text{ mm} \end{matrix}$$

The angle of the chamfer shall be 45°, or a corresponding full radius shall be used.

13.2.8 Outer diameter of the magnetizable ring

This diameter shall be

D_{10} = 19,0 mm min.

13.2.9 Inner diameter of the magnetizable ring

This diameter shall be

D_{11} = 8,0 mm max.

13.2.10 Thickness of the magnetizable material

This thickness shall be

h_6 = 0,5 mm min.

13.2.11 Position of the top of the magnetizable ring relative to the disk reference plane

This position shall be

$$h_7 = 2{,}2 \text{ mm} \begin{matrix} + 0{,}0 \text{ mm} \\ - 0{,}1 \text{ mm} \end{matrix}$$

13.3 Magnetizable material

The magnetizable material shall be ferritic stainless steel (ISO 683-13, Type 8) or any suitable material with similar magnetic characteristics.

13.4 Clamping force

The clamping force exerted by the spindle shall be less than 14 N.

13.5 Capture cylinder for the hub (see figure 12)

The capture cylinder is defined as the volume in which the spindle can expect the centre of the hole of the hub to be at the maximum height of the hub, just prior to capture. The size of the cylinder limits the allowable play of the disk inside its cavity in the case. This cylinder is referred to perfectly located and perfectly sized alignment and location pins in the drive, and includes tolerances of dimensions of the case and the disk between the two pins mentioned and the centre

Copyright International Organization for Standardization
Provided by IHS under license with ISO
No reproduction or networking permitted without license from IHS
Not for Resale

of the hub. The bottom of the cylinder is parallel to the reference plane P, and shall be located at a distance of

L_{58} = 0,5 mm min.

above the reference plane P of Side B of the case when Side A of the disk is to be used. The top of the cylinder shall be located at a distance of

L_{59} = 4,3 mm max.

above the same reference plane. The diameter of the cylinder shall be

D_{12} = 3,0 mm max.

Its centre shall be defined by the nominal values of L_{46} and L_{51}.

13.6 Disk position in the operating condition (see figure 12)

When the disk is in the operating condition within the drive, the position of the active recording layer shall be

L_{60} = 5,35 mm ± 0,15 mm

above reference plane P of that side of the case that faces the optical system. Moreover, the torque to be exerted on the disk in order to maintain a rotational frequency of 30 Hz shall not exceed 0,01 N.m, when the axis of rotation is within a circle with a diameter of

D_{13} = 0,2 mm max.

and a centre given by the nominal values of L_{46} and L_{51}.

Copyright International Organization for Standardization
Provided by IHS under license with ISO
No reproduction or networking permitted without license from IHS
Not for Resale

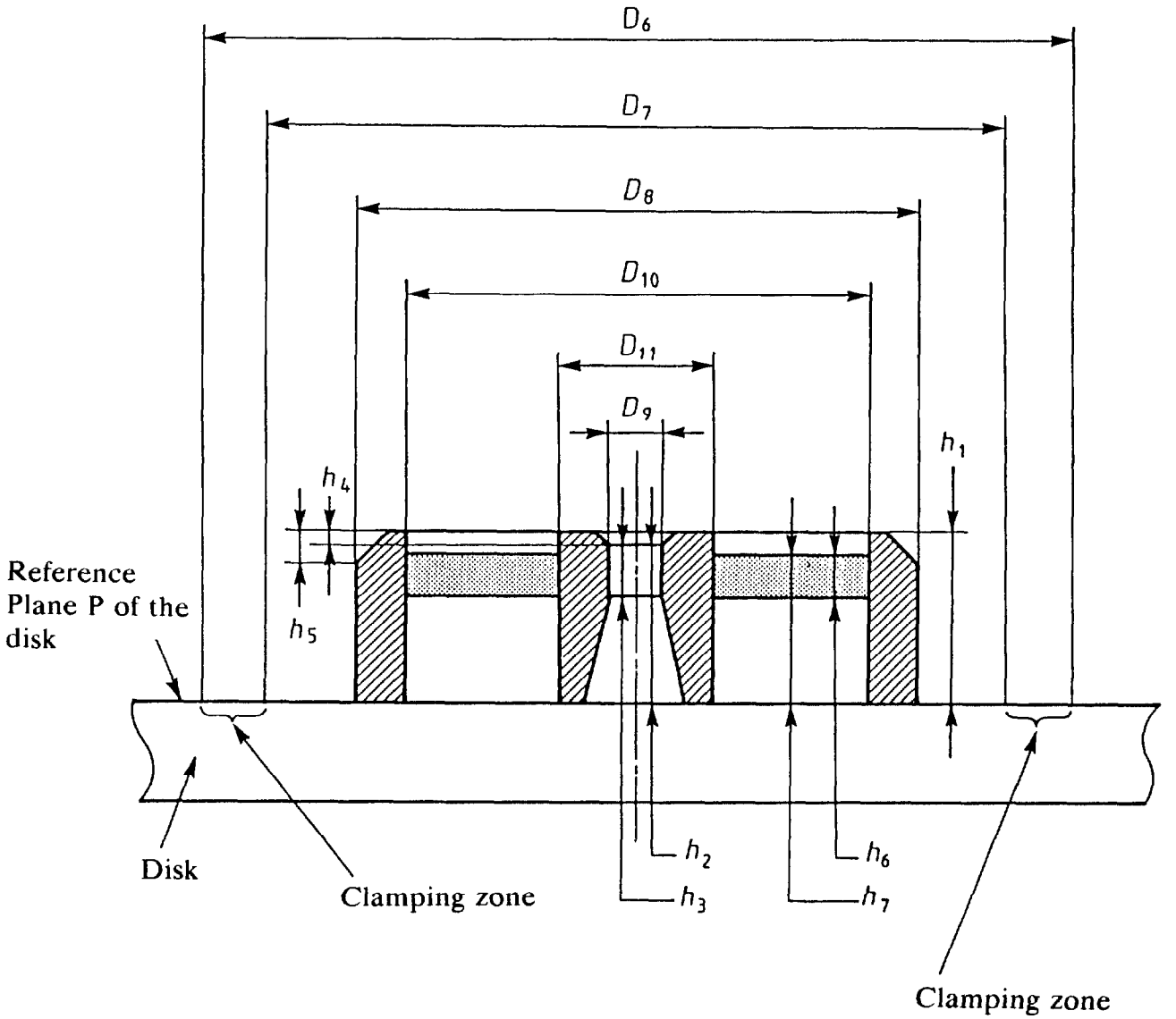

Figure 1 - Hub dimensions

Copyright International Organization for Standardization
Provided by IHS under license with ISO
No reproduction or networking permitted without license from IHS
Not for Resale

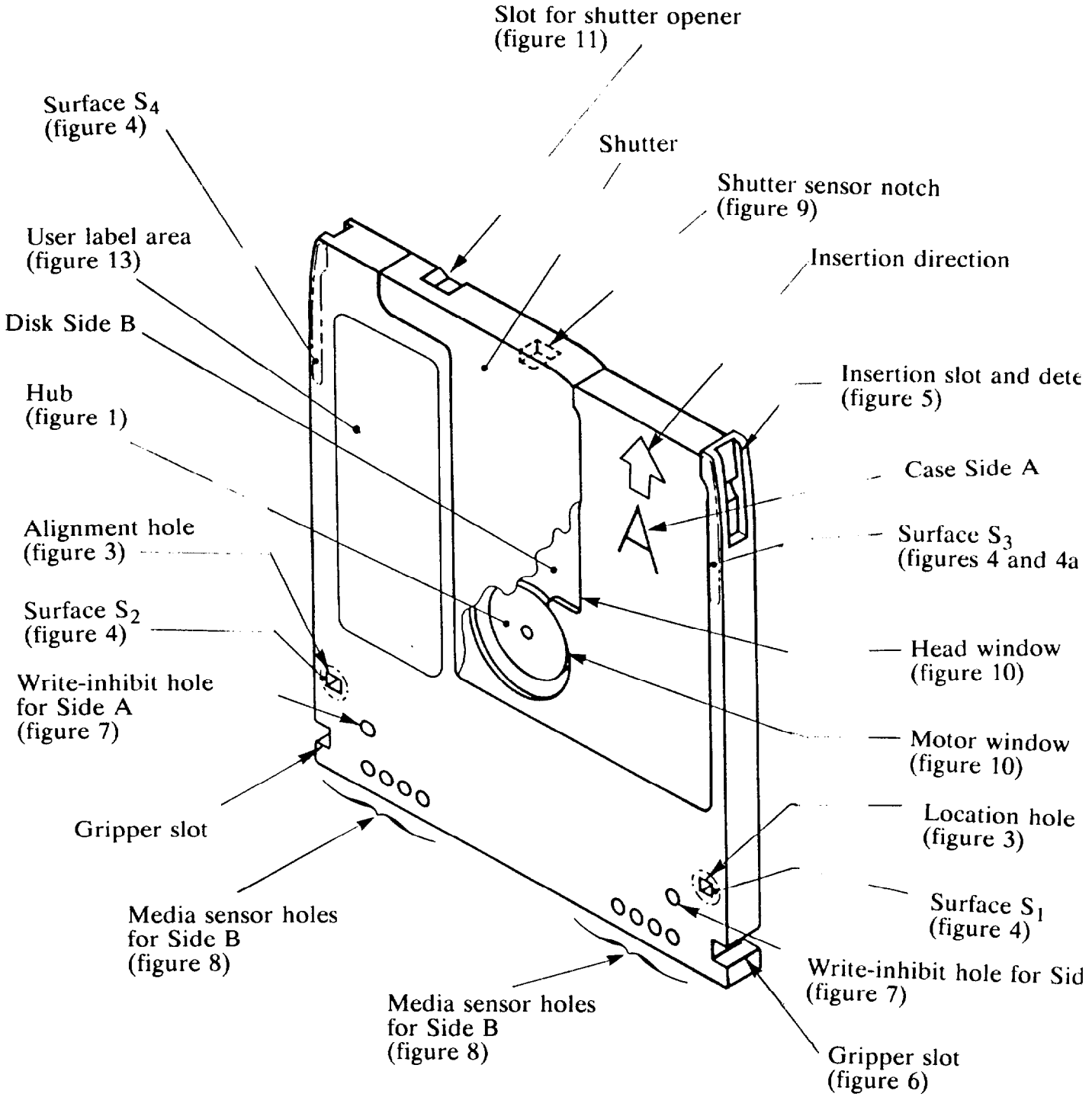

Figure 2 - Perspective view of the case

Copyright International Organization for Standardization
Provided by IHS under license with ISO
No reproduction or networking permitted without license from IHS
Not for Resale

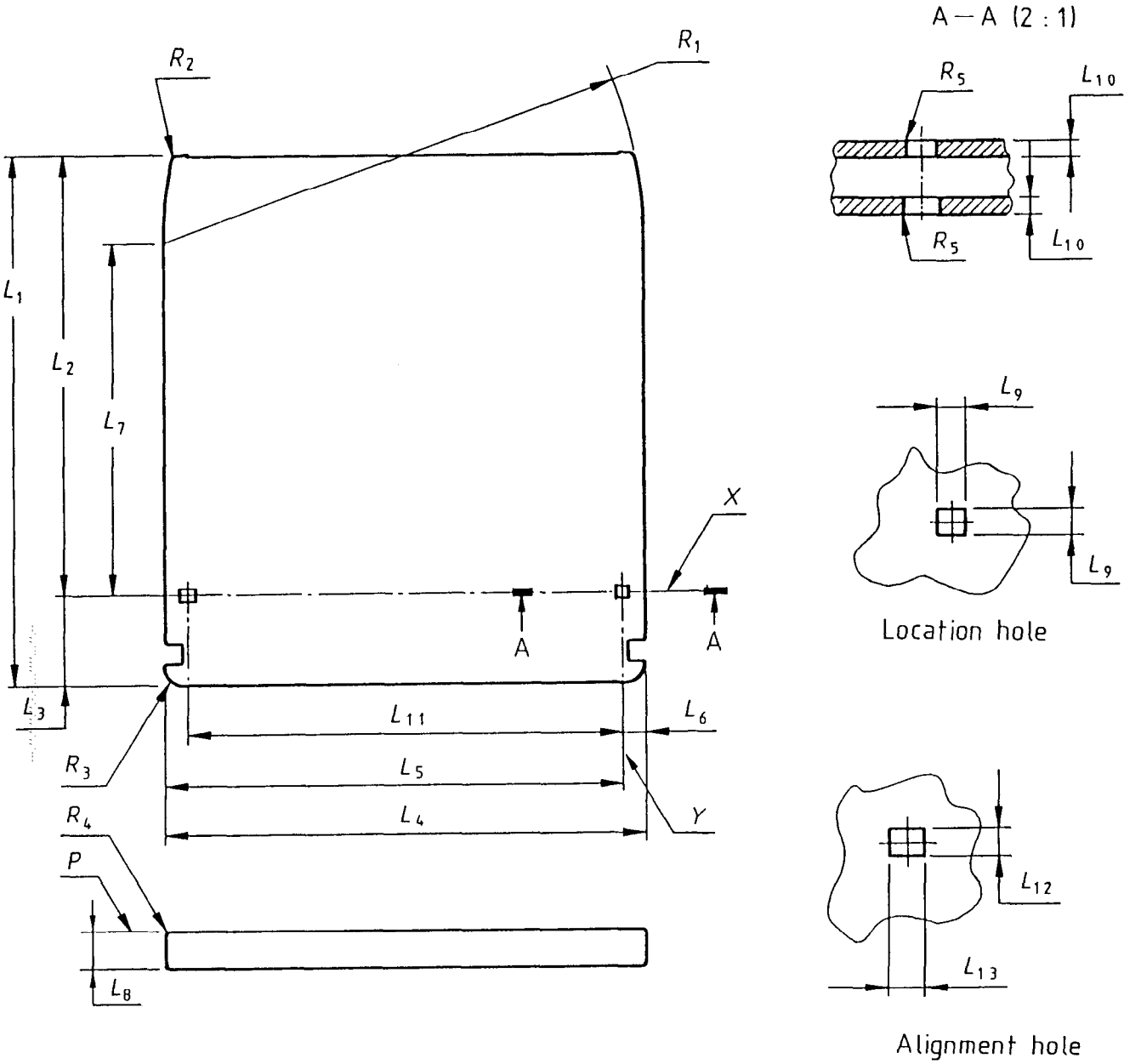

Figure 3 - Overall dimensions and reference axes

Copyright International Organization for Standardization
Provided by IHS under license with ISO
No reproduction or networking permitted without license from IHS
Not for Resale

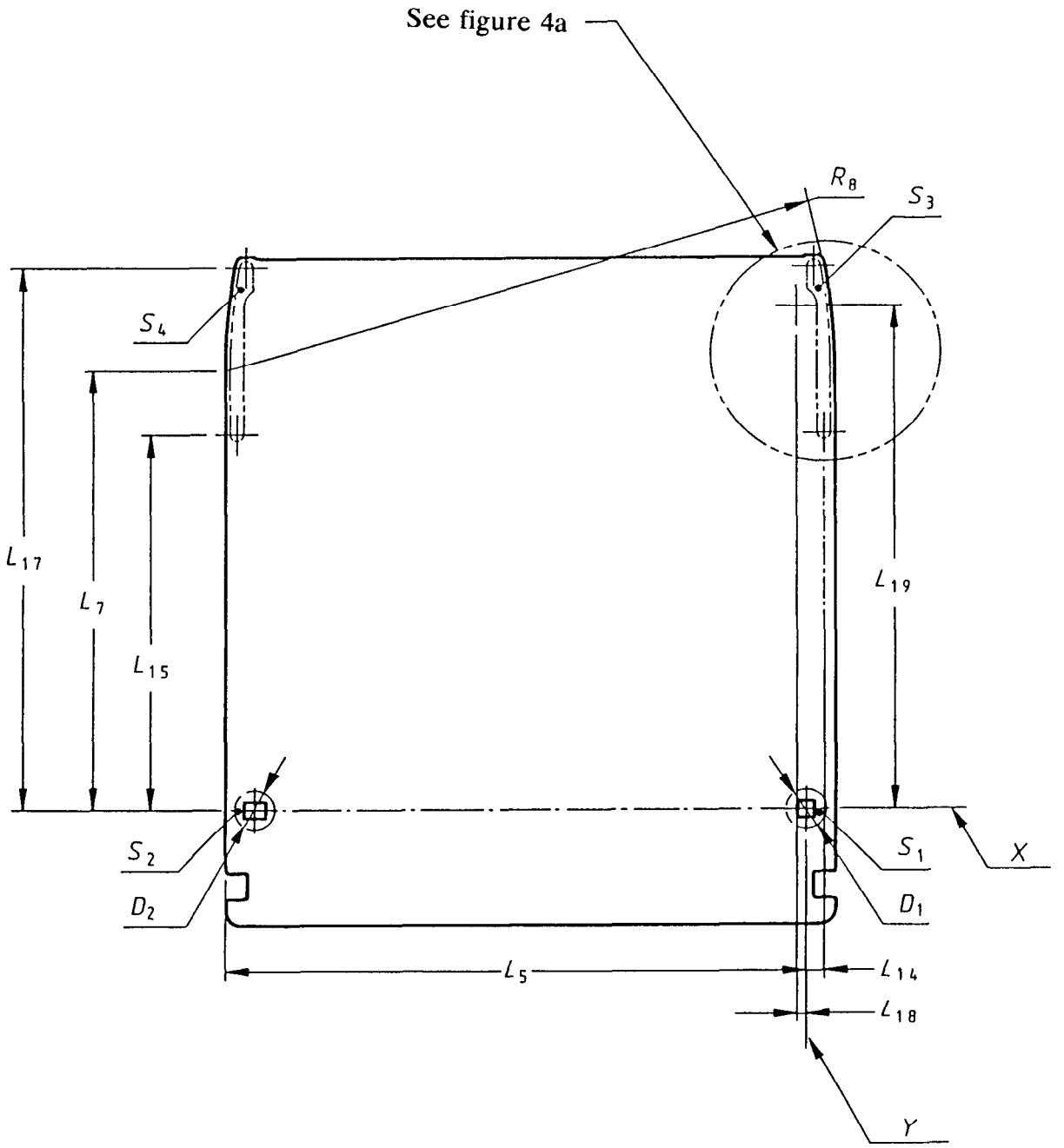

Figure 4 - Surfaces S1, S2, S3 and S4 of the reference plane P

Copyright International Organization for Standardization
Provided by IHS under license with ISO
No reproduction or networking permitted without license from IHS
Not for Resale

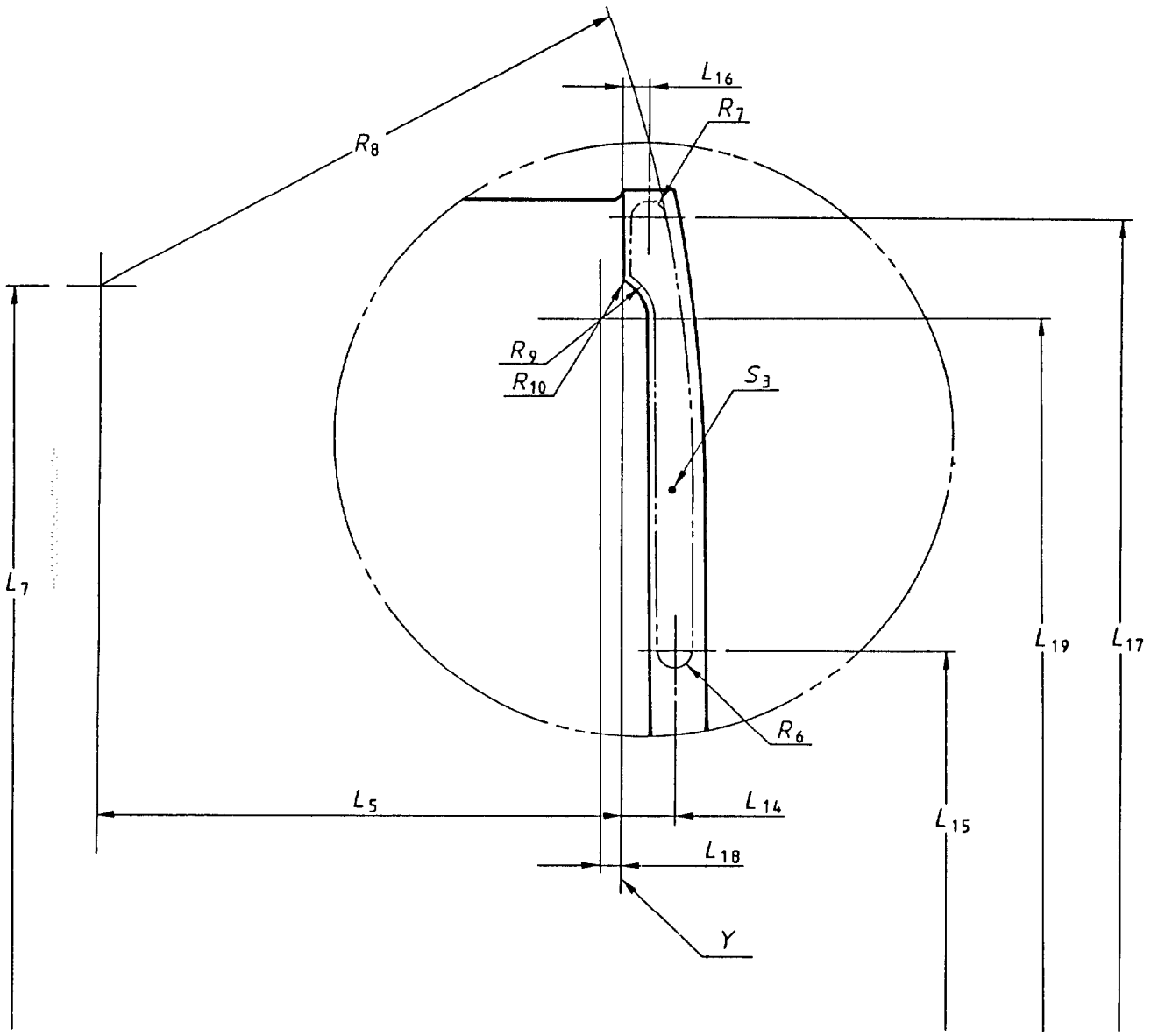

Figure 4a - Detail of surface S3

Copyright International Organization for Standardization
Provided by IHS under license with ISO
No reproduction or networking permitted without license from IHS
Not for Resale

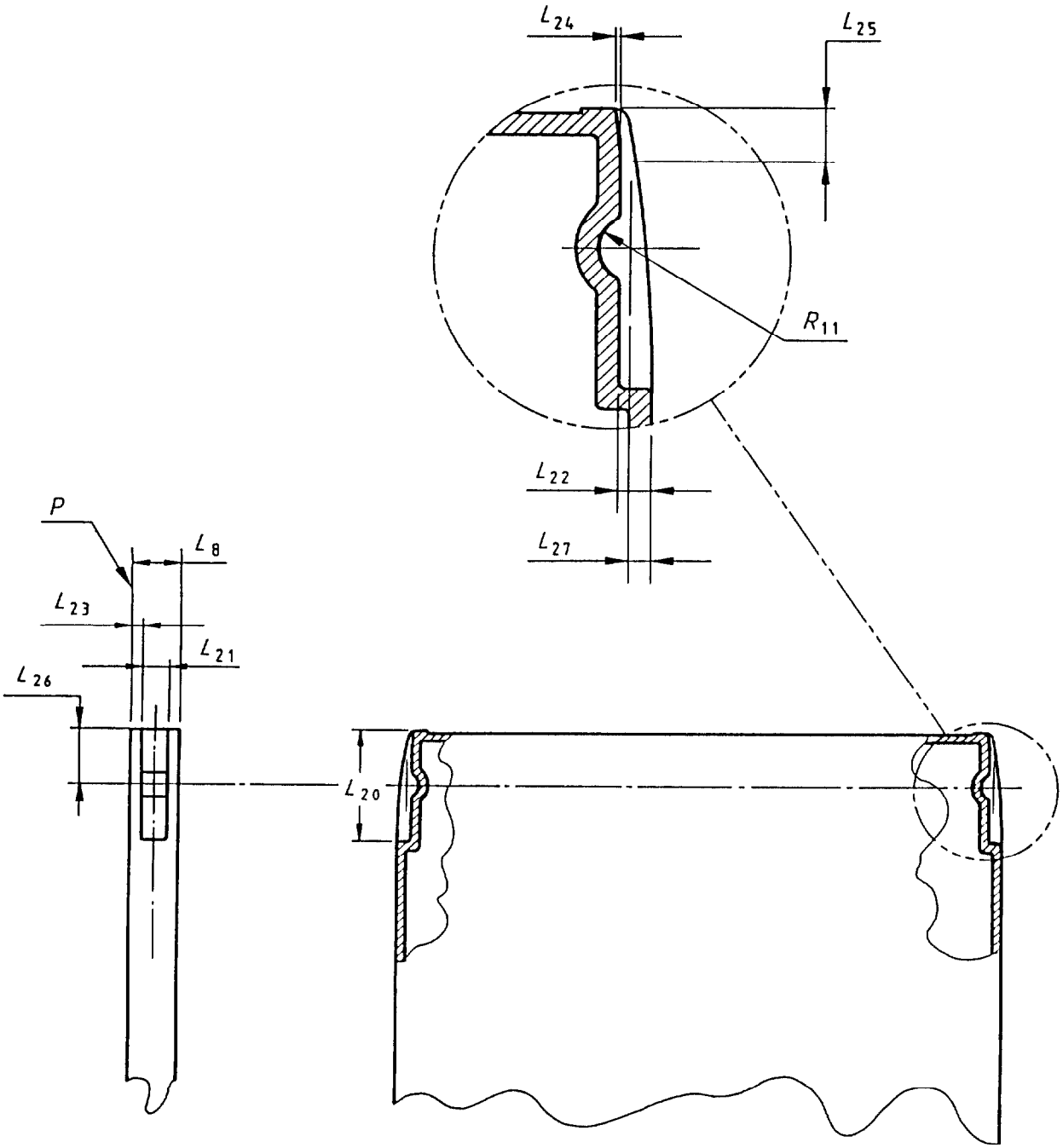

Figure 5 - Insertion slot and detent

Copyright International Organization for Standardization
Provided by IHS under license with ISO
No reproduction or networking permitted without license from IHS
Not for Resale

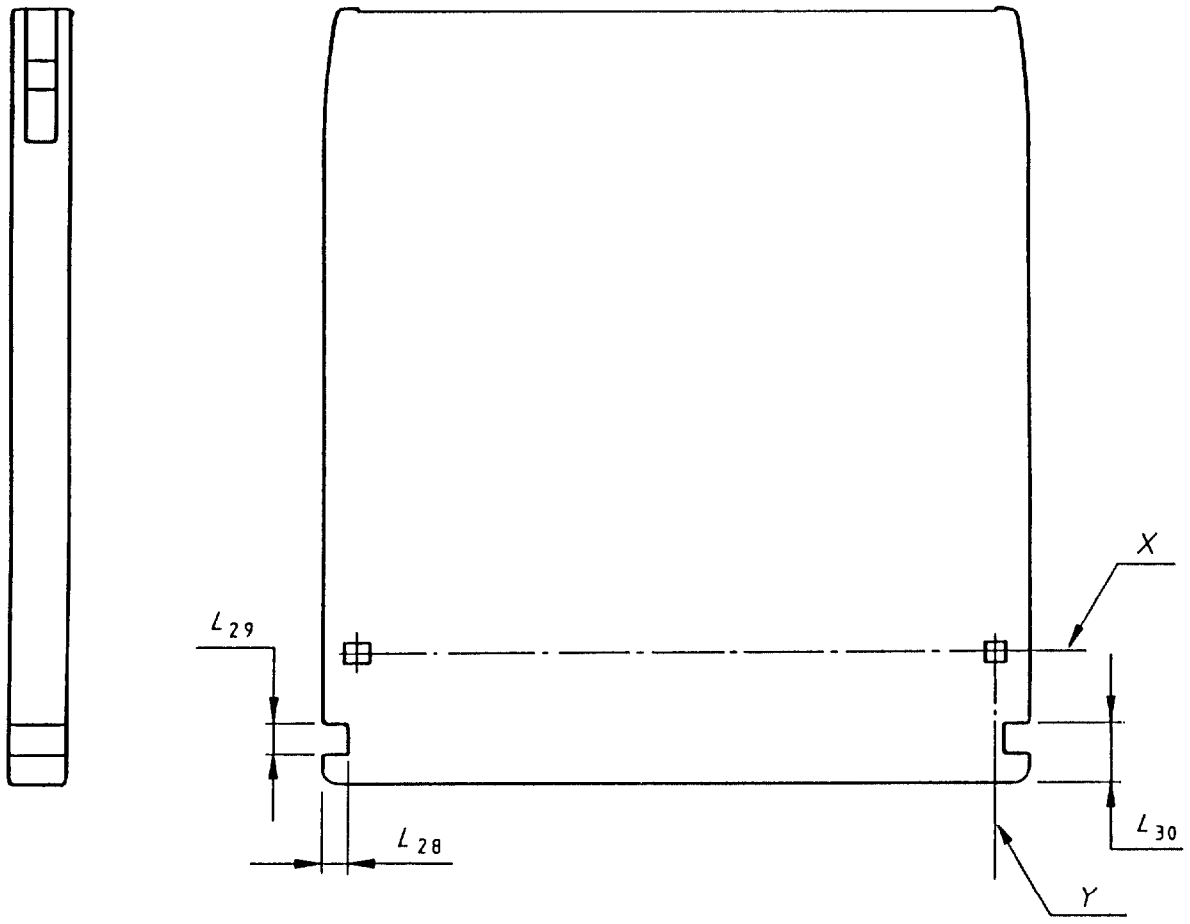

Figure 6 - Gripper slots

Copyright International Organization for Standardization
Provided by IHS under license with ISO
No reproduction or networking permitted without license from IHS
Not for Resale

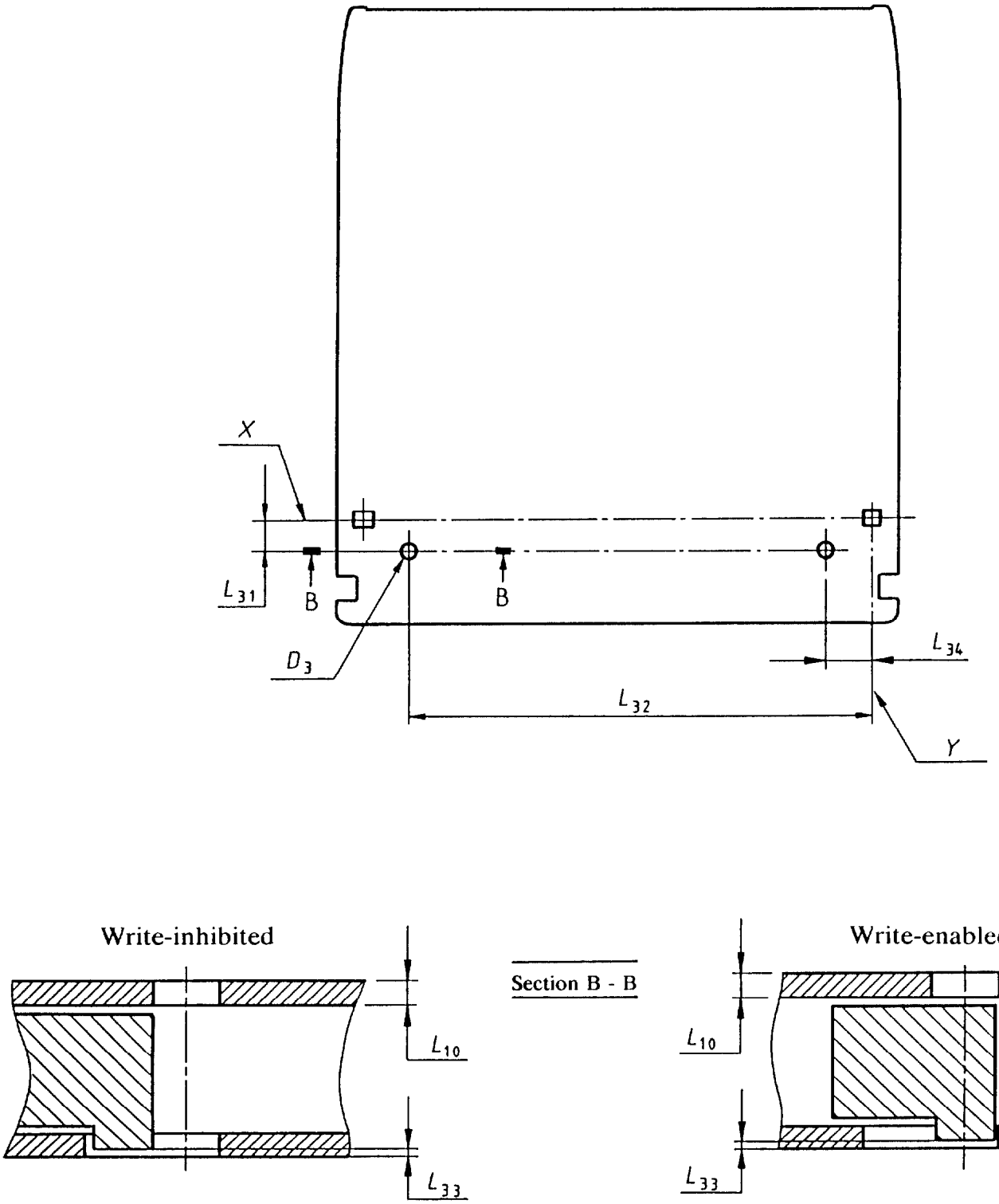

Figure 7 - Write-inhibit holes

Copyright International Organization for Standardization
Provided by IHS under license with ISO
No reproduction or networking permitted without license from IHS
Not for Resale

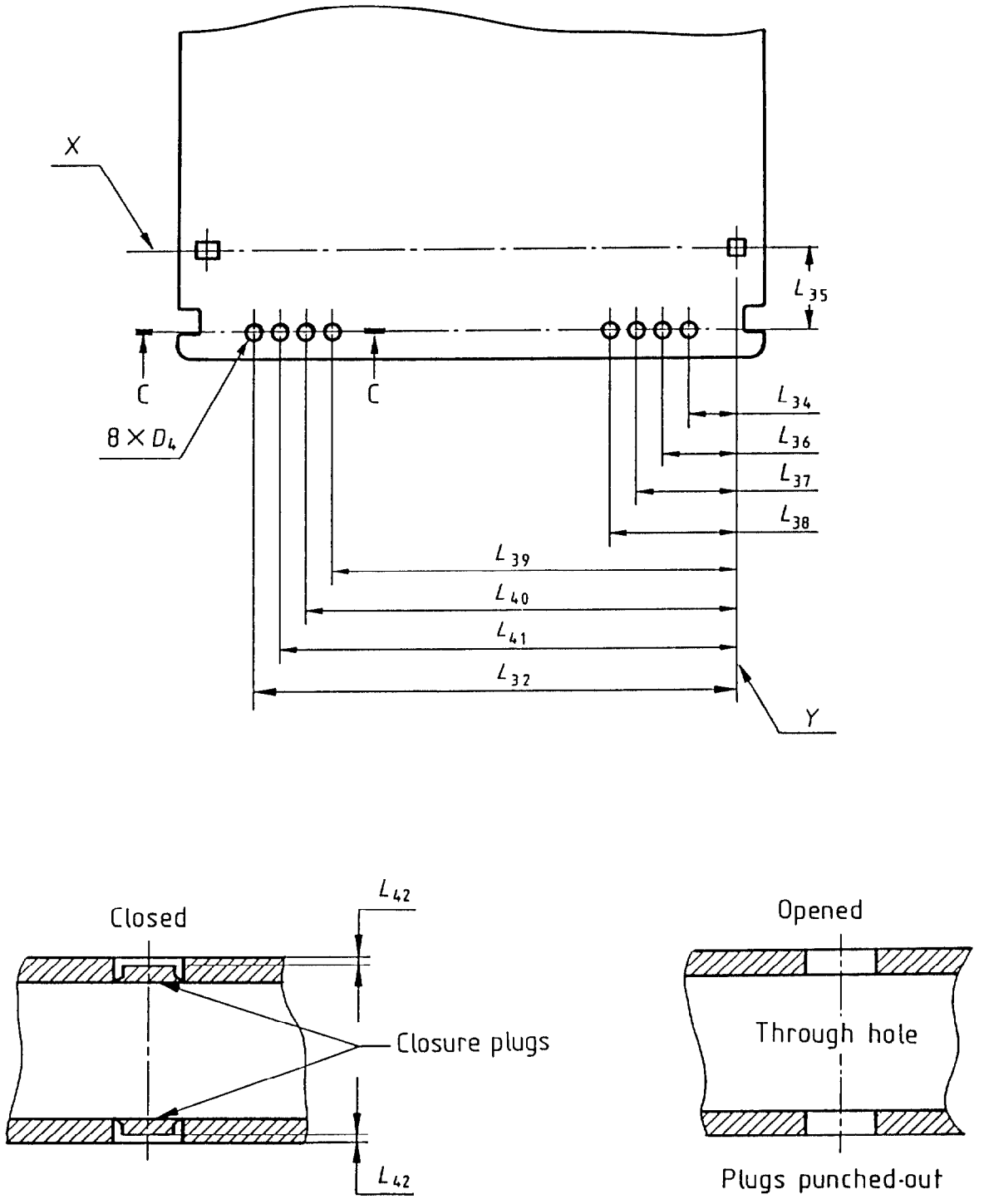

Typical sensor hole section C - C

Figure 8 - Media ID sensor holes

Copyright International Organization for Standardization
Provided by IHS under license with ISO
No reproduction or networking permitted without license from IHS
Not for Resale

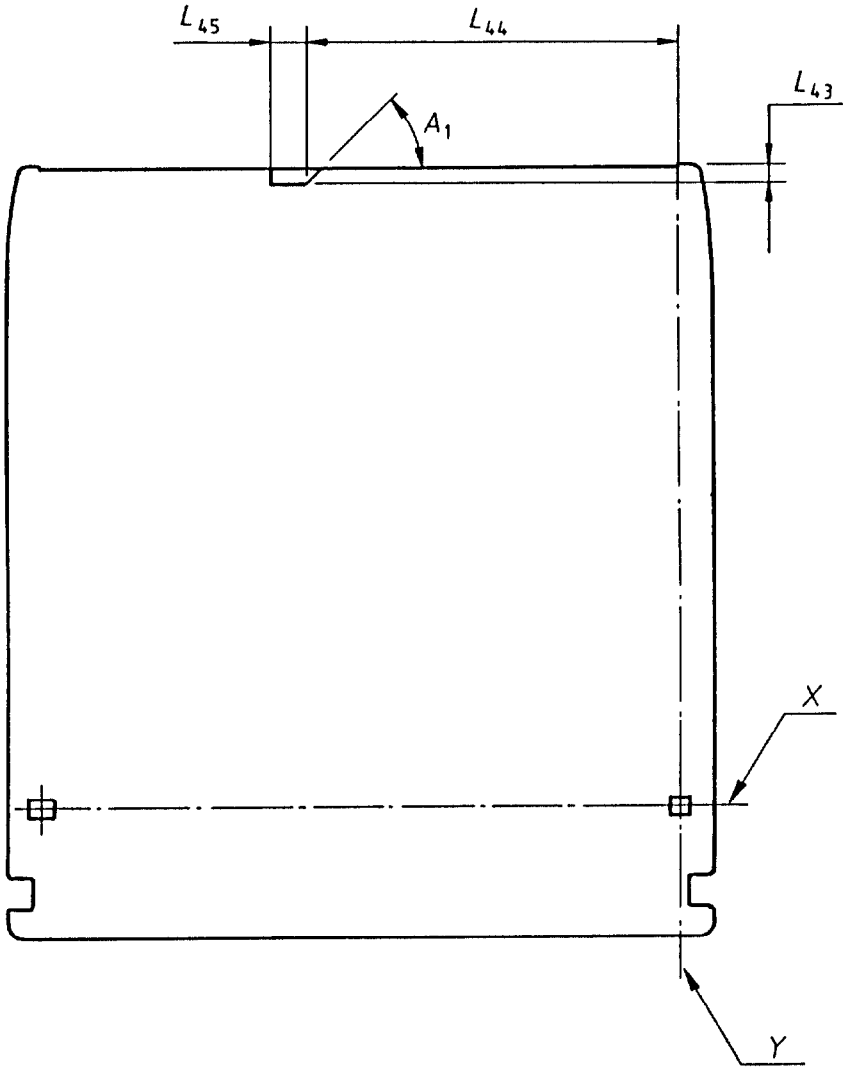

Figure 9 - Shutter sensor notch viewed from Side A

Copyright International Organization for Standardization
Provided by IHS under license with ISO
No reproduction or networking permitted without license from IHS
Not for Resale

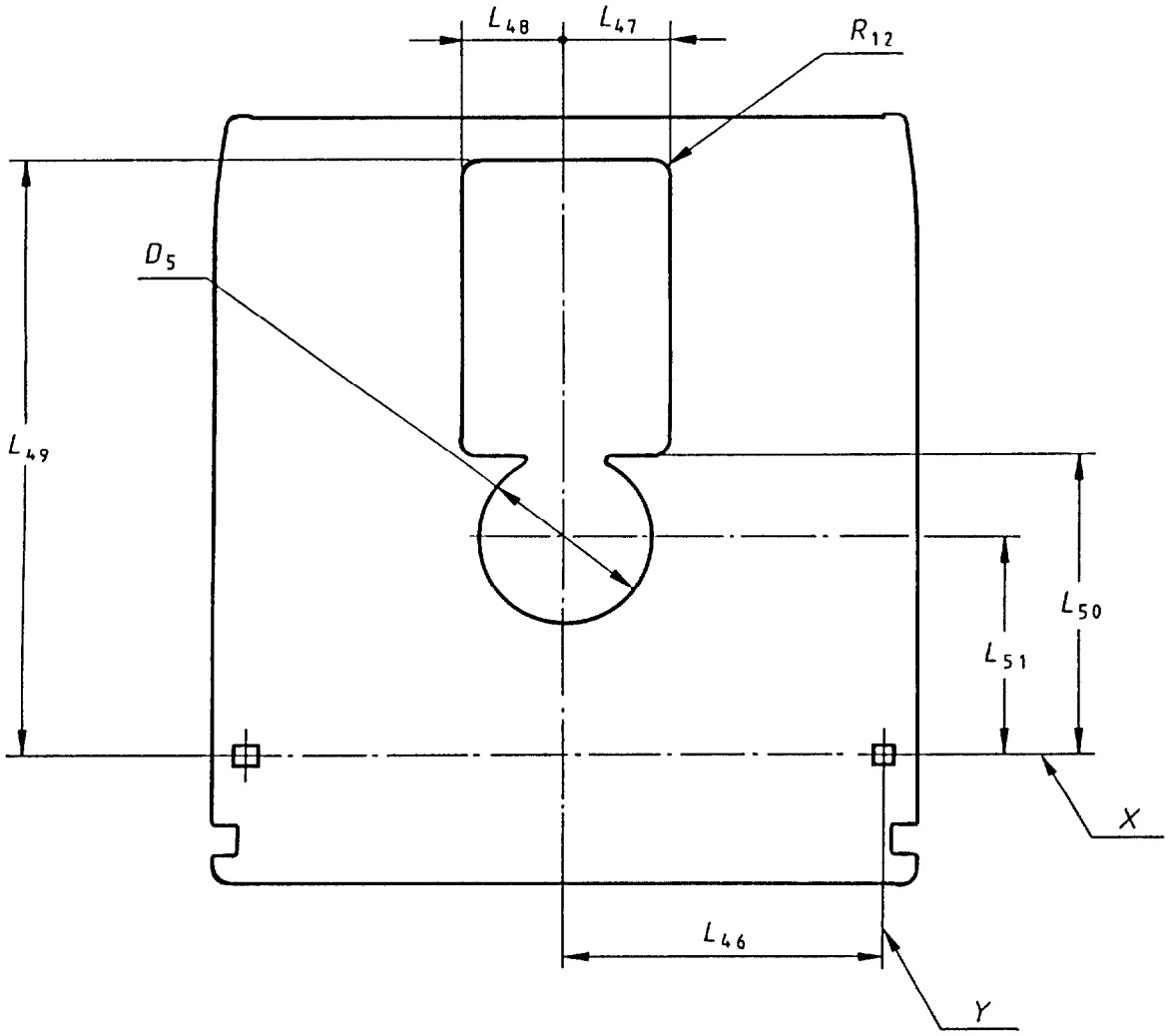

Figure 10 - Head and motor window

Copyright International Organization for Standardization
Provided by IHS under license with ISO
No reproduction or networking permitted without license from IHS
Not for Resale

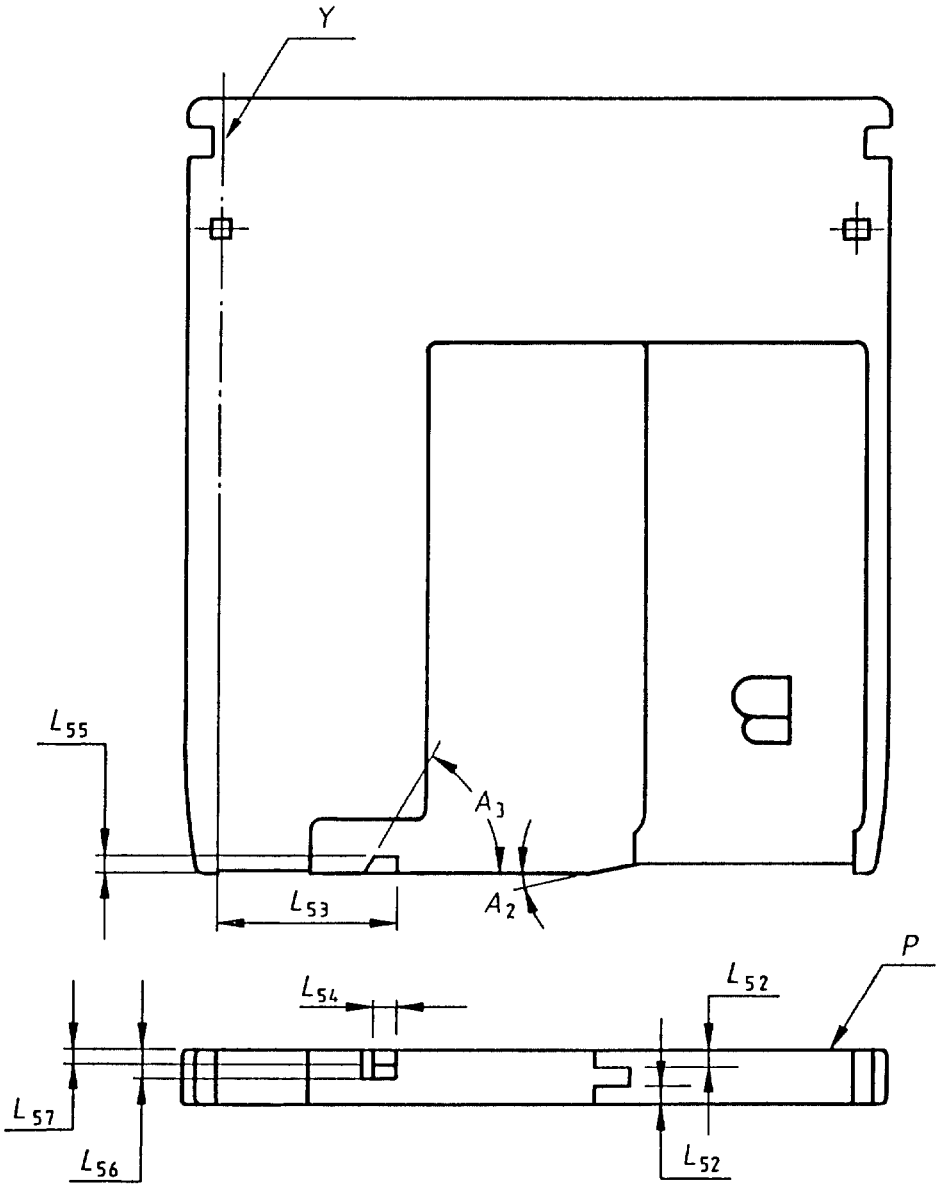

Figure 11 - Shutter opening feature

Copyright International Organization for Standardization
Provided by IHS under license with ISO
No reproduction or networking permitted without license from IHS
Not for Resale

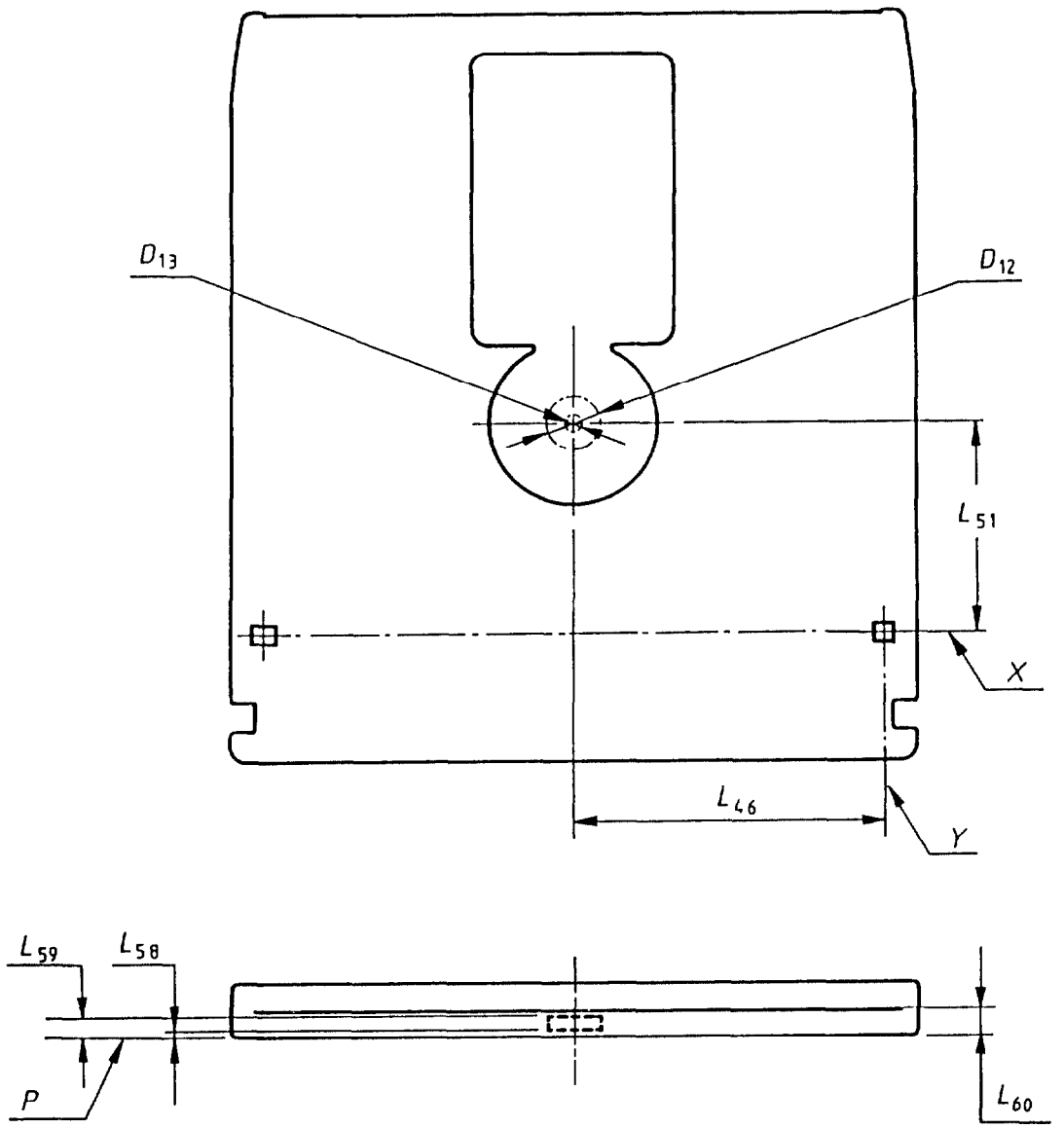

Figure 12 - Capture cylinder for the hub

Copyright International Organization for Standardization
Provided by IHS under license with ISO
No reproduction or networking permitted without license from IHS
Not for Resale

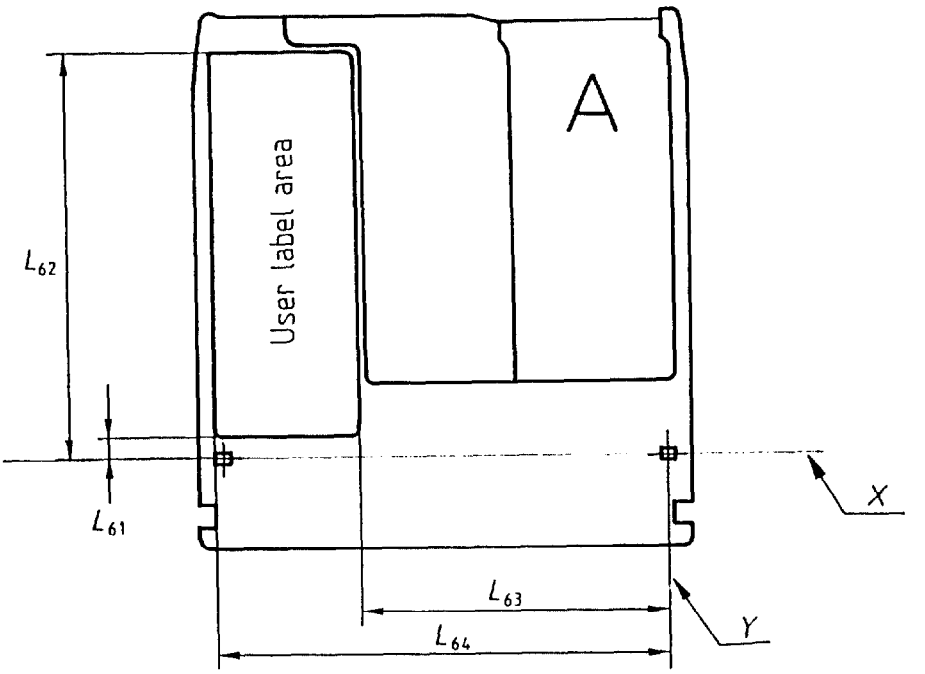

Figure 13a) -

User label area on Side A

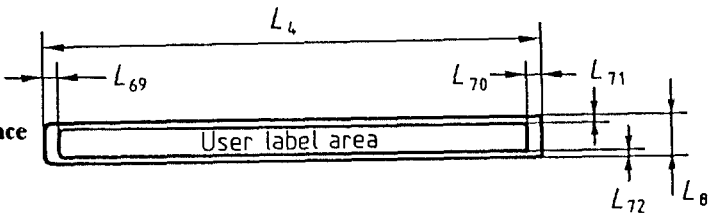

Figure 13b) -

User label area on bottom surface

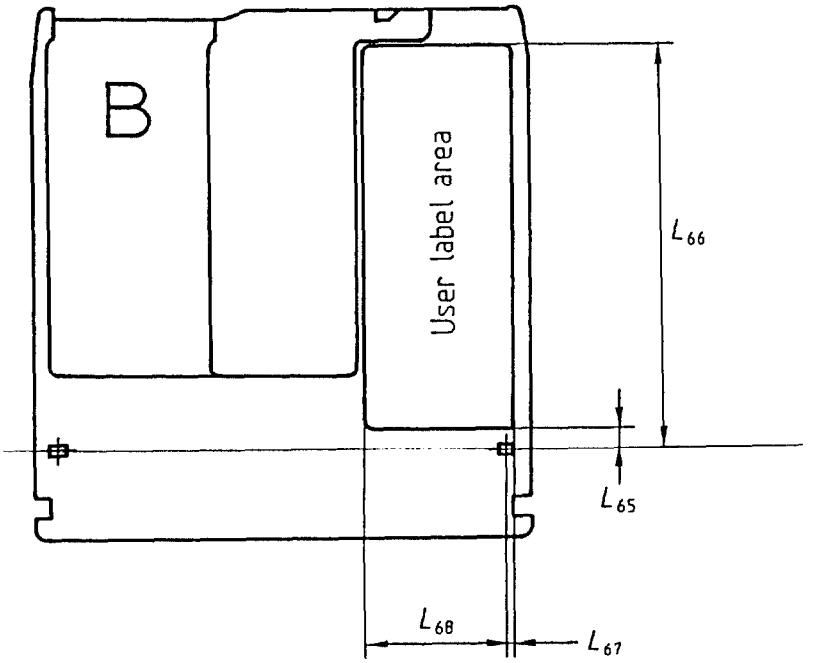

Figure 13c) -

User label area on Side B

Figure 13 - User label area

Copyright International Organization for Standardization
Provided by IHS under license with ISO
No reproduction or networking permitted without license from IHS
Not for Resale

14 Characteristics of the substrate

14.1 Index of refraction

Within the Formatted Zone (see 16.2) the index of refraction of the substrate shall be within the range from 1,46 to 1,60.

14.2 Thickness

The thickness of the substrate within the Formatted Zone shall be:

$$0{,}5093 \frac{n^3}{n^2-1} \times \frac{n^2 + 0{,}2650}{n^2 + 0{,}5929} \text{ mm} \pm 0{,}05 \text{ mm}$$

where n is the index of refraction.

15 Characteristics of the recording layer

The requirements of this clause shall be met for the linear polarization of the optical beam, both when parallel and when perpendicular to the tracks. Unless otherwise stated, all tests in this clause shall be carried out under the conditions of 15.1.1, and 15.1.2, 15.1.3, 15.1.4, as appropriate.

15.1 Test conditions

15.1.1 General

a)	Environment	: Test environment
b)	Wavelength (λ)	: 825 nm $^{+\ 15\ \text{nm}}_{-\ 10\ \text{nm}}$
c)	Wavelength (λ) divided by the numerical aperture (NA) of the objective lens	: λ/NA = 1,56 µm ± 0,04 µm
d)	Filling of the lens aperture (D/W) where D is the diameter of the lens aperture and W is the $1/e^2$ beam diameter of the Gaussian beam	: 1,0 max.
e)	Variance of the wavefront of the optical beam at the recording layer	: $\lambda^2/180$ max.
f)	Detection method	: see annex A
g)	Extinction ratio	: 0,01 max. (see annex A)
h)	Rotational frequency of the disk	: 30,0 Hz ± 0,3 Hz
i)	Direction of rotation of the disk	: Counter- clockwise when viewed from the objective lens.

15.1.2 Read conditions

Marks on the disk are read from the disk with a constant optical power.

The read power is the optical power incident at the entrance surface, used when reading, and is specified as follows for the stated zones (see 16.2):

a) PEP Zone

The read power shall not exceed 0,5 mW.

Copyright International Organization for Standardization
Provided by IHS under license with ISO
No reproduction or networking permitted without license from IHS
Not for Resale

b) SFP Zone

The read power shall not exceed the value given in byte 6 of the PEP Zone (see 16.4.3.1.4).

c) User zone

The read power shall not exceed the value given in byte 21 of the SFP Zone (see 16.5.2).

15.1.3 Write conditions

Marks are written on to the disk by pulses of optical power superimposed upon a specified bias power 1,5 mW ± 10% (see annex B).

The pulse shape shall be as specified in annex B.

The write power is the optical power incident at the entrance surface, used when writing in the user zone.

Testing shall be carried out at either

- a constant pulse width and a write power appropriate to the radius, as given in bytes 22 - 24 or 25 - 27 of the SFP Zone (see 16.5.2), or
- a constant write power given in byte 31 and a pulse width appropriate to the radius, as given in bytes 32 -34 of the SFP Zone (see 16.5.2).

For radii other than 30 mm, 45 mm or 60 mm the values shall be linearly interpolated from the above.

In all cases the actual power and pulse width used shall be within 5 % of those selected.

The required power shall not exceed

a) for a pulse width T_p between 10 ns and 70 ns:

$$75 \left(\frac{1}{T_p} + \frac{1}{\sqrt{T_p}} \right) \text{mW}$$

b) for a pulse width exceeding 70 ns: 10 mW.

The requirements for all tests shall be met for all magnetic field intensities, at the recording layer during writing, in the range from 18 000 A/m to 32 000 A/m.

The write magnetic field shall be normal to the recording surface. The direction of the write magnetic field shall be from the entrance surface to the recording layer.

15.1.4 Erase conditions

The erase power is the optical power required for any given track at the entrance surface to erase marks written according to 15.1.3 to a specified level (see 15.3.6).

The actual erase power shall be within 10% of that specified in the control tracks.

Testing shall be carried out at either

- a d.c. power given in bytes 45 - 47 of the SFP Zone (see 16.5.2),
- or a constant pulse width and an erase power appropriate to the radius, as given in bytes 35 - 37 or 38 - 40 of the SFP Zone (see 16.5.2),
- or a constant erase power given in byte 44 and a pulse width appropriate to the radius, as given in bytes 45 - 47 of the SFP Zone (see 16.5.2).

Copyright International Organization for Standardization
Provided by IHS under license with ISO
No reproduction or networking permitted without license from IHS
Not for Resale

When d.c. erasing is used the required power shall not exceed:

10 mW.

When pulse erasing is used

a) for a pulse width T_p between 10 ns and 70 ns, the required power shall not exceed

$$75\left(\frac{1}{T_p}+\frac{1}{\sqrt{T_p}}\right)\text{ mW}$$

where T_p is the pulse width, in nanoseconds;

b) for a pulse width T_p exceeding 70 ns the required power shall not exceed 10 mW.

The requirements for all tests shall be met for all magnetic field intensities, at the recording layer during erasing, in the range from 18 000 A/m to 32 000 A/m.

The erase magnetic field shall be normal to the recording surface. The direction of the magnetic field shall be from the recording layer to the entrance surface.

15.2 Baseline reflectance

15.2.1 General

The baseline reflectance is the value of the reflectance of an unrecorded, ungrooved area of the disk, measured through the substrate and does not include the reflectance of the entrance surface.

The nominal value R of the baseline reflectance shall be specified by the manufacturer:

- in byte 3 of the PEP Zone (see 16.4.3.1.4), and
- in byte 19 of the SFP Zone (see 16.5.2).

15.2.2 Actual value

The actual value R_m of the baseline reflectance shall be measured under the conditions a) to e) of 15.1.1 and those of 15.1.2.

Measurements shall be made in any unrecorded, ungrooved area, e.g.

- for Format A : in the ODF (see 17.1.1),
- for Format B : in the Unique Distance Part (see 18.1.1) of the servo area, or in the unrecorded track between servo areas.

15.2.3 Requirement

At any point in the Formatted Zone, except in the Reflective Zone and in the Lead-out Zone the value R_m shall be within 12% of the value of R, and shall be within the range 0,10 and 0,34.

15.3 Magneto-optical recording in the User Zone

15.3.1 Resolution

I_L is the peak-to-peak value of the signal obtained in Channel 2 (annex A) from marks written under any of the conditions given in 15.1.3 and at a local repetition rate of less than 1,4 MHz, and read under the conditions specified in 15.1.2c).

I_H is the peak-to-peak value of the signal obtained in Channel 2 from marks written under any of the conditions given in 15.1.3 and at a local repetition rate of 3,7 MHz ± 0,1 MHz, and read under the condition specified in 15.1.2c).

Copyright International Organization for Standardization
Provided by IHS under license with ISO
No reproduction or networking permitted without license from IHS
Not for Resale

The resolution I_H/I_L (see figure 14) shall not be less than 0,4 within any sector. It shall not vary by more than 0,2 over a track.

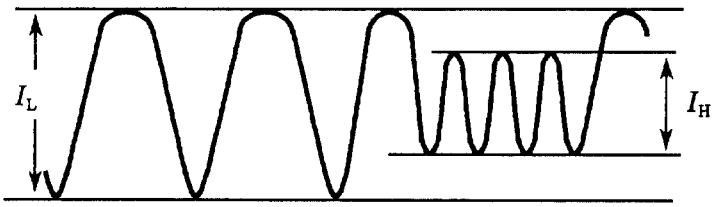

Figure 14 - Definition of I_L and I_H

15.3.2 Imbalance of magneto-optical signal

The imbalance of the magneto-optical signal is the ratio of the amplitude of the signal in Channel 2 over the amplitude of the signal in Channel 1 measured in the Data field of a sector . The effect of Kerr rotation shall be eliminated, e.g. by alternating the magnetized direction of the recording layer. The phase retarder in the optical system shall be in the neutral position (see annex A). Imbalance can be caused by birefringence of the disk.

The imbalance shall not exceed 0,06 in the User Zone, throughout the environmental operating range and in a bandwidth from DC to 50 kHz.

15.3.3 Figure of merit for magneto-optical signal

The figure of merit F is expressed as the product of R, sin θ and cos 2β, where R is the reflectance expressed as a decimal fraction, θ is the Kerr rotation and β is the ellipticity of the reflected beam. The polarity of the figure of merit is defined to be negative for a written mark in an Fe-rich Fe-Tb alloy layer and with the write magnetic field in the direction specified in 15.1.3. In this case the direction of Kerr rotation is counterclockwise as viewed from the source of the beam.

The polarity and the value of the figure of merit shall be specified in bytes 364 and 365 of the SFP Zone (see 16.5.2). This nominal value shall be

$$0{,}0017 < | F | < 0{,}0052$$

The measurement of the actual value F_m shall be made according to annex C. This actual value F_m shall be within 12% of the nominal value.

15.3.4 Narrow-band signal-to-noise ratio

Write a track in the User Zone under the conditions given in 15.1.3 and at a frequency f_0 of 3,7 MHz ± 0,1 MHz. Read the Data fields in Channel 2 under the condition specified in 15.1.2 using a spectrum analyzer with a centre frequency f_0 and a bandwidth of 30 kHz. Measure the amplitudes of the signal and the noise at f_0 (see figure 15). The narrow-band signal-to-noise ratio is

$$20 \log_{10}\left(\frac{\text{signal level}}{\text{noise level}}\right)$$

This ratio shall be greater than 45 dB for all tracks in the User Zone and for all phase differences between -15° and +15° in the optical system as defined in annex A.

Copyright International Organization for Standardization
Provided by IHS under license with ISO
No reproduction or networking permitted without license from IHS
Not for Resale

NOTE 3 It is permitted to use a spectrum analyzer with a bandwidth of 3 kHz and to convert the measured value to that for a 30 kHz value.

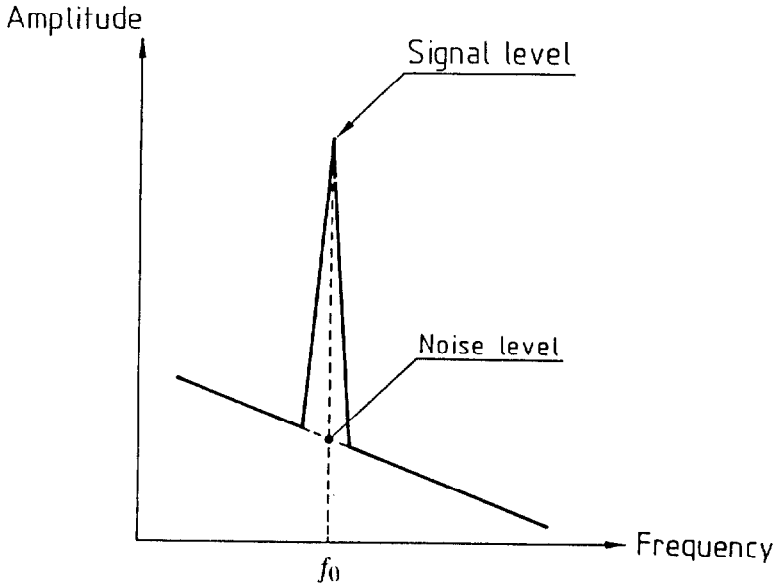

Figure 15 - Amplitude versus frequency for the magneto-optical signal

15.3.5 Cross-talk ratio

The test shall be carried out on any group of five adjacent unrecorded tracks in the User Zone.

Write on the centre track n under the conditions given in 15.3.4. Read tracks $(n\text{-}1)$, n and $(n+1)$ under the conditions specified in 15.1.2 c). The cross-talk ratio is:

$$20 \log_{10}\left(\frac{\text{signal level of track } n+1}{\text{signal level of track } n}\right) \text{ and } 20 \log_{10}\left(\frac{\text{signal level of track } n\text{-}1}{\text{signal level of track } n}\right)$$

It shall be lower than:

- -26 dB for a track pitch of 1,6 µm (byte 0, bit 7 set to ZERO (see 16.4.3.1.4)),
- -23 dB for a track pitch of 1,5 µm (byte 0, bit 7 set to ONE (see 16.4.3.1.4)).

15.3.6 Ease of erasure

Procedure

a) Write any track in the User Zone under the conditions given in 15.1.3 and at a frequency f_0 of 3,7 MHz ± 0,1 MHz.

b) Read under the condition specified in 15.1.2, using the spectrum analyzer with a centre frequency f_0 and a bandwidth of 30 kHz. Note the amplitude of the written marks.

c) Erase under the conditions of 15.1.4.

d) Repeat a) and c) 1000 times.

e) Repeat a).

f) Repeat b); note the signal level of the written marks and of the noise at f_0 (see figure 15).

Copyright International Organization for Standardization
Provided by IHS under license with ISO
No reproduction or networking permitted without license from IHS
Not for Resale

g) Repeat c); note the residual signal level of the written marks at f_0.

Requirements

The narrow-band signal-to-noise ratio, calculated from the readings in f), shall be greater than 45 dB.

The residual signal in g) shall be less than -40 dB relative to the signal level of the written marks in b).

16. Features common to both formats

16.1 Track geometry

16.1.1 Track shape

Each track shall form a 360° turn of a continuous spiral.

16.1.2 Direction of rotation

The disk shall rotate counter-clockwise as viewed by the objective lens. The tracks shall spiral outwards.

16.1.3 Track pitch

Except in the Control Track PEP Zone, the track pitch shall be:

For Format A : 1,60 µm ± 0,10 µm
For Format B : 1,50 µm ± 0,08 µm

16.1.4 Track number

Each track shall be identified by a track number.

Track 0 shall be located at radius 30,00 mm ± 0,10 mm.

The track numbers of tracks located at radii larger than that of track 0 shall be increased by 1 for each track.

The track numbers of tracks located at radii smaller than that of track 0 shall be negative and decrease by 1 for each track. Track -1 is indicated by (FF)(FF).

16.2 Formatted Zone

The Formatted Zone shall extend from radius 27,00 mm to radius 61,00 mm and shall be divided as follows. Dimensions are given as reference only, and are nominal locations.

- Reflective Zone 27,00 mm to 29,00 mm
- Control Track PEP Zone 29,00 mm to 29,50 mm
- Transition Zone For SFP 29,50 mm to 29,52 mm
- Inner Control Track SFP Zone 29,52 mm to 29,70 mm
- Inner Manufacturer Zone 29,70 mm to 30,00 mm
  - . Guard Band 29,70 mm to 29,80 mm
  - . Manufacturer Test Zone 29,80 mm to 29,90 mm
  - . Guard Band 29,90 mm to 30,00 mm
- User Zone 30,00 mm to 60,00 mm
- Outer Manufacturer Zone 60,00 mm to 60,15 mm
- Outer Control Track SFP Zone 60,15 mm to 60,50 mm

Copyright International Organization for Standardization
Provided by IHS under license with ISO
No reproduction or networking permitted without license from IHS Not for Resale

Lead-Out Zone	60,50 mm to 61,00 mm

This International Standard does not specify the format of the Reflective Zone, except that it shall have the same recording layer as the remainder of the Formatted Zone.

The Transition Zone For SFP is an area in which the format changes from the Control Track PEP Zone without servo information to a zone including servo information.

The Inner Manufacturer Zone is provided to allow the media manufacturer to perform tests on the disk, including write operations, in an area located away from recorded information. In this zone, the information in the tracks from track-1 to track-8 is not specified by this International Standard and shall be ignored in interchange, except that when using Format B track -2 is used for defect management.

The purpose of the Guard Bands is to protect and buffer the areas that contain information from accidental damage when the area between the Guard Bands is used for testing or calibration of the optical system.

The User Zone shall start with track 0 and end with track N.

The Outer Manufacturer Zone shall comprise 95 tracks and shall begin one track after the last user track (track N, see bytes 384, 385 of the SFP Zone). The information in the tracks from track (N + 1) to track (N + 8) is not specified by this International Standard and shall be ignored in interchange. Tracks (N + 9) to (N + 95) are reserved for testing by the manufacturer.

The Outer Control Track SFP Zone shall begin at track N + 96 (see bytes 8, 9 in the PEP Zone) and shall continue up to radius 60,50 mm.

The Lead-Out Zone shall be used positioning purposes only.

From radius 29,52 mm to radius 61,00 mm the Formatted Zone shall be provided with tracks containing servo and address information.

16.3 Control tracks

The three zones

- Control Track PEP Zone
- Inner Control Track SFP Zone
- Outer Control Track SFP Zone

shall be used for recording control track information.

The control track information shall be recorded in two different formats, the first format in the Control Track PEP Zone, and the second in the Inner and Outer Control Track SFP Zones.

The Control Track PEP Zone shall be recorded using low frequency phase-encoded modulation.

The Inner and Outer Control Track SFP Zones shall each consist of a band of tracks recorded by the same modulation method and format as is used in the User Zone.

16.4 Control Track PEP Zone

This zone shall not contain any servo information. All information in it shall be pre-recorded in phase-encoded modulation. The marks in all tracks of the PEP Zone shall be radially aligned, so as to allow information recovery from this zone without radial tracking being established by the drive.

16.4.1 Recording in the PEP Zone

In the PEP Zone there shall be 561 to 567 PEP bit cells per revolution. A PEP bit cell shall be 656 ± 1 Channel bits long. A PEP bit is recorded by writing marks in either the first or the second half of the cell.

Copyright International Organization for Standardization
Provided by IHS under license with ISO
No reproduction or networking permitted without license from IHS
Not for Resale

A mark shall be nominally two Channel bits long and shall be separated from adjacent marks by a space of nominally two Channel bits.

A ZERO shall be represented by a change from marks to no marks at the centre of the cell and a ONE by a change from no marks to marks at this centre.

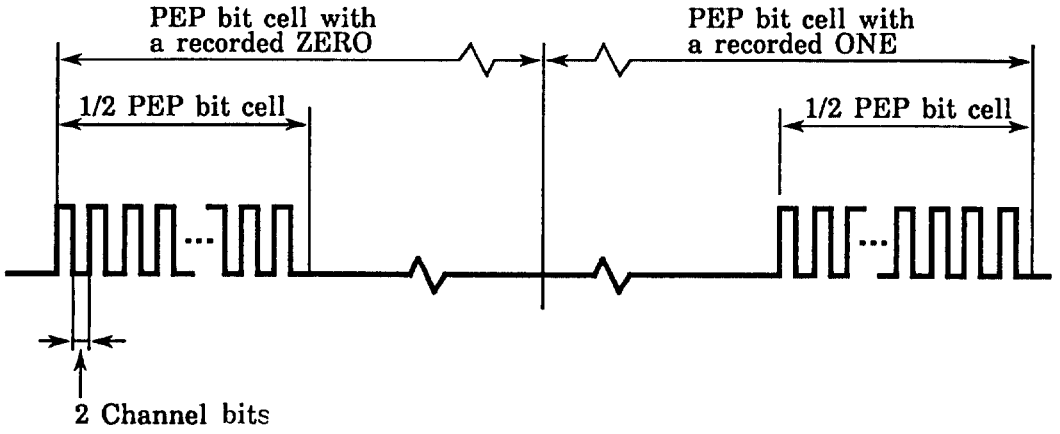

Figure 16 - Example of phase-encoded modulation in the PEP Zone

16.4.2 Cross-track loss

The density of tracks and the shape of marks in the PEP Zone shall be such that the cross-track loss meets the requirement

$$\left(\frac{I_{m\ max}}{I_{m\ min}}\right) < 2{,}0$$

The signal I is obtained from Channel 1 (see annex A). The signal I_m is the maximum amplitude in a group of three successive marks. $I_{m\ max}$ is the maximum value and $I_{m\ min}$ is the minimum value of I_m obtained over one revolution. $I_{m\ max}$ shall be greater than 0,4 I_0, where I_0 is the signal obtained from Channel 1 in an unrecorded ungrooved area. The effect of defects shall be ignored.

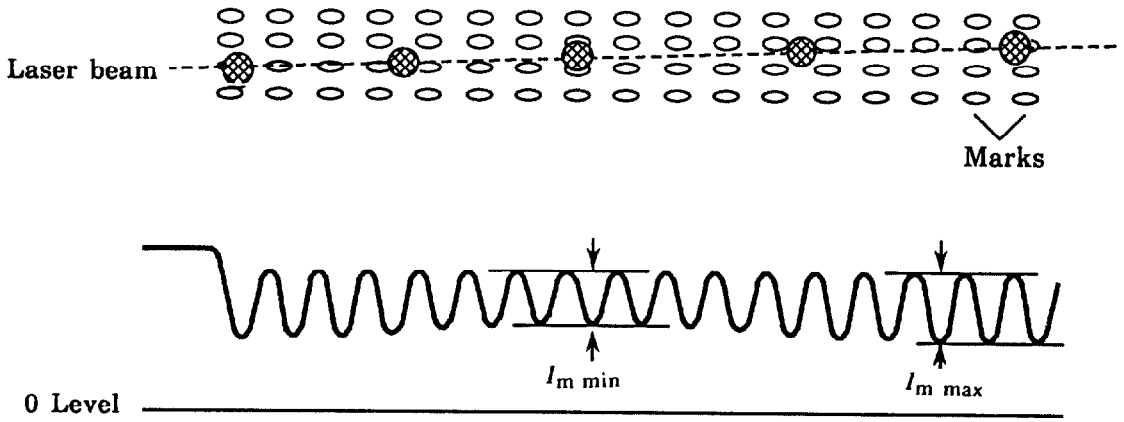

Figure 17 - Path of the laser beam when crossing tracks and the resulting PEP signals

Copyright International Organization for Standardization
Provided by IHS under license with ISO
No reproduction or networking permitted without license from IHS
Not for Resale

16.4.3 Format of the tracks of the PEP Zone

Each track in the PEP Zone shall have three sectors as shown in figure 18. The numbers below the fields indicate the number of PEP bits in each field.

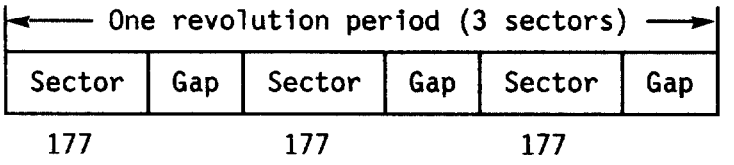

Figure 18 - Track format in the PEP Zone

The gaps between sectors shall be unrecorded areas having a length corresponding to 10 to 12 PEP bits.

16.4.3.1 Format of a sector

Each sector of 177 PEP bits shall have the following layout.

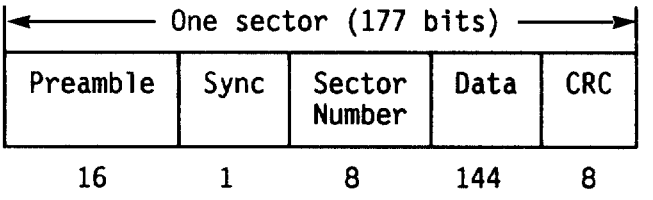

Figure 19 - Sector format in the PEP Zone

16.4.3.1.1 Preamble field

This field shall consist of 16 ZERO bits.

16.4.3.1.2 Sync field

This field shall consist of 1 ONE bit.

16.4.3.1.3 Sector Number field

This field shall consist of eight bits specifying in binary notation the sector number from 0 to 2.

16.4.3.1.4 Data field

This field shall comprise 18 8-bit bytes numbered 0 to 17. These bytes shall specify the following.

Byte 0

bit 7 — when set to ZERO shall mean Format A;

when set to ONE shall mean Format B.

bits 6 to 4 — shall be set to 000 indicating a constant angular velocity (CAV).

Other settings of these bits are prohibited by this International Standard (see also annex D).

bit 3 — shall be set to ZERO

bits 2 to 0 — when set to 000 shall mean RLL (2,7) mark position modulation,

when set to 100 shall mean 4/15 modulation.

Copyright International Organization for Standardization
Provided by IHS under license with ISO
No reproduction or networking permitted without license from IHS
Not for Resale

Other settings of these bits are prohibited by this International Standard.

Byte 1

bit 7 — shall be set to ZERO

bits 6 to 4 — specify the error correction code:

when set to 000 shall mean R-S LDC degree 16, and 10 interleaves,

when set to 001 shall mean R-S LDC degree 16, and 5 interleaves,

when set to 100 shall mean R-S product code (48,44,5) x (14,12,3)

Other settings of these bits are prohibited by this International Standard.

bit 3 — shall be set to ZERO

bits 2 to 0 — these bits shall specify in binary notation the power n of 2 in the following formula which expresses the number of user bytes per sector

$$256 \times 2^n$$

Values of n other than 1 or 2 are prohibited by this International Standard.

Byte 2

This byte shall specify in binary notation the number of sectors in track 0.

Byte 3

This byte shall give the manufacturer's specification for the baseline reflectance R of the disk when measured at a nominal wavelength of 825 nm. It is specified as a number n between 10 and 34 such that

$$n = 100\,R$$

Byte 4

This byte shall specify that the recording is on-land and it shall indicate the signal amplitude of the pre-recorded marks.

bit 7 shall be set to ZERO to specify on-land recording.

The absolute value of the signal amplitude is given as a number n between -20 and -50, such that

$$n = -50\ (I_p / I_o)$$

where I_p is the signal from Channel 1 from the low frequency pre-recorded marks and I_o is the signal from an unrecorded, ungrooved area.

bits 6 to 0 — shall express this number n. Bit 6 shall be set to ONE to indicate that this number is negative and expressed by bits 5 to 0 in TWO's complement. Recording is high-to-low.

Byte 5

This byte shall be set either to (00) or to (FF).

Byte 6

This byte shall specify in binary notation a number n representing 20 times the maximum read power expressed in milliwatts which is permitted for reading the SFP Zone at a

Copyright International Organization for Standardization
Provided by IHS under license with ISO
No reproduction or networking permitted without license from IHS
Not for Resale

rotational frequency of 30 Hz and a wavelength of 825 nm. This number n shall be between 0 and 40.

Byte 7

The byte shall specify the media type.

0010 0000 shall mean a rewritable optical disk cartridge according to this International Standard.

Other settings of this byte are prohibited by this International Standard (see also annex D).

Byte 8

This byte shall specify the most significant byte of the track number of the track in which the Outer Control Track SFP Zone starts.

Byte 9

This byte shall specify the least significant byte of the track number in which the Outer Control Track SFP Zone starts.

Bytes 10 to 13

These bytes shall be set to (FF).

Bytes 14 to 17

The contents of these bytes are not specified by this International Standard, they may be used for manufacturer's identification. They shall be ignored in interchange.

16.4.3.1.5 CRC

The eight bits of the CRC shall be computed over the Sector Number field and the Data field of the PEP sector.

The generator polynomial shall be

$$G(x) = x^8 + x^4 + x^3 + x^2 + 1$$

The residual polynomial $R(x)$ shall be

$$R(x) = \left(\sum_{i=144}^{i=151} \overline{a}_i x^i + \sum_{i=0}^{i=143} a_i x^i \right) x^8 \mod G(x)$$

where a_i denotes a bit of the input data and $\overline{a_i}$ an inverted bit. The highest order bit of the Sector Number field is a_{151}.

The eight bits c_k of the CRC are defined by

$$R_c(x) = \sum_{k=0}^{k=7} c_k x^k$$

where c_7 is recorded as the highest order bit of the CRC byte of the PEP sector.

Copyright International Organization for Standardization
Provided by IHS under license with ISO
No reproduction or networking permitted without license from IHS
Not for Resale

16.4.3.2 Summary of the format of the Data field of a sector

Table 1 - Format of the Data field of a sector of the PEP Zone

Byte	Bit	7	6	5	4	3	2	1	0
0		Format	0	0	0	0	Modulation Code		
1		0	ECC			0	Number of user bytes		
2		Number of sectors in track 0							
3		Baseline reflectance at 825 nm							
4		0	Amplitude and polarity of pre-formatted data						
5		(00) or (FF)							
6		Max. read power for the SFP Zone at 30 Hz and 825 nm							
7		0	0	1	0	0	0	0	0
8		Start track of Outer SFP Zone, MSB of track number							
9		Start track of Outer SFP Zone, LSB of track number							
10		1	1	1	1	1	1	1	1
11		1	1	1	1	1	1	1	1
12		1	1	1	1	1	1	1	1
13		1	1	1	1	1	1	1	1
14		not specified, ignored in interchange							
15		not specified, ignored in interchange							
16		not specified, ignored in interchange							
17		not specified, ignored in interchange							

16.5 Control Track SFP Zones

The two Control Track SFP Zones shall be pre-recorded in the Standard User Data Format (see 17.2 and 18.2). The pre-recorded data marks shall satisfy the requirements for the VFO and ID signals specified in 17.1.2.2 and 18.1.2.

Each sector of the SFP Zones shall include 512 bytes of information numbered 0 to 511 and grouped in five sections;

- a duplicate of the PEP information (18 bytes);
- media information (366 bytes);

Copyright International Organization for Standardization
Provided by IHS under license with ISO
No reproduction or networking permitted without license from IHS
Not for Resale

- system information (64 bytes);
- bytes reserved for future standardization (32 bytes);
- contents not specified by this International Standard (32 bytes).

In the case of 1 024-byte sectors these first 512 bytes shall be followed by 512 (FF)-bytes.

The DMP bytes (see 18.2.5.7) of each sector may not conform to this International Standard.

16.5.1 Duplicate of the PEP information

Bytes 0 to 17 shall be identical with the 18 bytes of the Data field of a sector of the PEP Zone (see 16.4.3.1.4).

16.5.2 Media information

Bytes 18 to 359 specify read and write parameters at three laser wavelengths L_1 = 825 nm, L_2 = 780 nm and L_3. For each wavelength the baseline reflectance R_1, R_2 or R_3 is specified. The read and write powers are specified for four different rotational frequencies N_1 = 30 Hz, N_2 = 40 Hz, N_3 and N_4 for each wavelength. For each value of N four sets of write powers are given: three sets for constant pulse width and one set for constant power. Each set contains three values for the inner, middle and outer radius.

Bytes 18 to 27, bytes 31 to 34, bytes 44 to 47 and bytes 360 to 383 are mandatory. They shall specify the conditions for

L_1 = 825 nm and N_1 = 30 Hz

Bytes 35 to 40 are optional for Format A, they shall either contain the information specified or be set to (FF). These bytes are mandatory for Format B.

Bytes 28 to 30, bytes 41 to 43 and bytes 48 to 359 are optional. They shall either specify the information indicated or be set to (FF).

All values specified in bytes 18 to 359 shall be such that the requirements of clauses 14 and 15 are met.

Byte 18

This byte shall specify the wavelength L_1 in nanometres as a number n between 0 and 255 such that

$n = 1/5\ L_1$

This byte shall be set to n = 165 for ODCs according to this International Standard.

Byte 19

This byte shall specify the baseline reflectance R_1 at wavelength L_1 as a number n between 10 and 34 such that

$n = 100\ R_1$

Byte 20

This byte shall specify the rotational frequency N_1 in hertz as a number n such that

$n = N_1$

This byte shall be set to n = 30 for ODCs according to this International Standard.

Byte 21

This byte shall specify the maximum read power P_1, in milliwatts, for the user zone as a number n between 0 and 40 such that

Copyright International Organization for Standardization
Provided by IHS under license with ISO
No reproduction or networking permitted without license from IHS
Not for Resale

$n = 20\ P_l$

The following bytes 22 to 30 specify, at constant pulse width, the write power P_w in milliwatts indicated by the manufacturer of the disk. P_w is expressed as a number n between 0 and 255 such that

$n = 5\ P_w$

In these bytes T' stands for the constant pulse width, T for the time length of one Channel bit and r for the radius considered.

Byte 22

This byte shall specify P_w for

$T' = T \times 1{,}00$
$r = 30$ mm

Byte 23

This byte shall specify P_w for

$T' = T \times 1{,}00$
$r = 45$ mm

Byte 24

This byte shall specify P_w for

$T' = T \times 1{,}00$
$r = 60$ mm

Byte 25

This byte shall specify P_w for

$T' = T \times 0{,}50$
$r = 30$ mm

Byte 26

This byte shall specify P_w for

$T' = T \times 0{,}50$
$r = 45$ mm

Byte 27

This byte shall specify P_w for

$T' = T \times 0{,}50$
$r = 60$ mm

Byte 28

This byte shall specify P_w for

$T' = T \times 0{,}25$
$r = 30$ mm

Byte 29

This byte shall specify P_w for

$T' = T \times 0{,}25$

Copyright International Organization for Standardization
Provided by IHS under license with ISO
No reproduction or networking permitted without license from IHS
Not for Resale

r = 45 mm

Byte 30

This byte shall specify P_w for

$T' = T \times 0{,}25$
r = 60 mm

Byte 31

This byte shall specify a constant write power P_w, in milliwatts, as a number n between 0 and 255 such that

$n = 5P_w$

Byte 32

This byte shall specify the write pulse width T_p, in nanoseconds, expressed by a number n between 0 and 255 such that

$n = T_p$

for the constant write power specified by byte 31 and at a radius r = 30 mm.

Byte 33

This byte shall specify the write pulse width T_p, in nanoseconds, expressed by a number n between 0 and 255 such that

$n = T_p$

for the constant write power specified by byte 31 and at a radius r = 45 mm.

Byte 34

This byte shall specify the write pulse width T_p, in nanoseconds, expressed by a number n between 0 and 255 such that

$n = T_p$

for the constant write power specified by byte 31 and at a radius r = 60 mm.

The following bytes 35 to 43 specify, at constant pulse width, the erase power P_E in milliwatts indicated by the manufacturer of the disk. P_E is expressed as a number n between 0 and 255 such that

$n = 5\ P_E$.

Byte 35

This byte shall specify P_E for

$T' = T \times 1{,}00$
r = 30 mm

Byte 36

This byte shall specify P_E for

$T' = T \times 1{,}00$

Copyright International Organization for Standardization
Provided by IHS under license with ISO
No reproduction or networking permitted without license from IHS
Not for Resale

r = 45 mm

Byte 37

This byte shall specify P_E for

$T' = T \times 1{,}00$
r = 60 mm

Byte 38

This byte shall specify P_E for

$T' = T \times 0{,}50$
r = 30 mm

Byte 39

This byte shall specify P_E for

$T' = T \times 0{,}50$
r = 45 mm

Byte 40

This byte shall specify P_E for

$T' = T \times 0{,}50$
r = 60 mm

Byte 41

This byte shall specify P_E for

$T' = T \times 0{,}25$
r = 30 mm

Byte 42

This byte shall specify P_E for

$T' = T \times 0{,}25$
r = 45 mm

Byte 43

This byte shall specify P_E for

$T' = T \times 0{,}25$
r = 60 mm

Byte 44

This byte shall specify the erase power expressed as a number n equal to 5 times its value in milliwatts. If the value of byte 44 equals 0, then bytes 45 to 47 below specify in the same manner the erase power for a d.c. erase instead of the erase pulse width. The erase pulse width is an absolute unsigned number expressed in nanoseconds.

Byte 45

Erase pulse width/power

EP, r = 30 mm

Byte 46

Erase pulse width/power

Copyright International Organization for Standardization
Provided by IHS under license with ISO
No reproduction or networking permitted without license from IHS
Not for Resale

$EP, r = 45$ mm

Byte 47

Erase pulse width/power

$EP, r = 60$ mm

Byte 48

This byte shall specify, at wavelength L_1, the rotational frequency N_2 in hertz as a number n between 0 and 255 such that

$$n = N_2$$

If this byte is not set to (FF), n shall be set to 40 for ODCs according to this International Standard.

Byte 49

This byte shall specify the maximum read power P_2, in milliwatts, for the User Zone as a number n between 0 and 255 such that

$$n = 20\ P_2$$

Bytes 50 to 62

For the values specified in bytes 18, 19, 48 and 49, bytes 50 to 62 shall specify the parameters indicated in bytes 22 to 34.

Bytes 63 to 75

For the values specified in bytes 18, 19, 48 and 49, bytes 63 to 75 shall specify the parameters indicated in bytes 35 to 47.

Byte 76

This byte shall specify, at wavelength L_1, rotational frequency N_3, in hertz, expressed as a number n between 0 and 255 such that

$$n = N_3$$

Byte 77

This byte shall specify the maximum read power P_3, in milliwatts, for the User Zone, as a number n between 0 and 255 such that

$$n = 20\ P_3$$

Bytes 78 to 90

For the values specified in bytes 18, 19, 76 and 77, bytes 78 to 90 shall specify the parameters indicated in bytes 22 to 34.

Bytes 91 to 103

For the values specified in bytes 18, 19, 76 and 77, bytes 91 to 103 shall specify the parameters indicated in bytes 35 to 47.

Byte 104

This byte shall specify, at wavelength L_1, rotational frequency N_4, in hertz, as a number n between 0 and 255 such that

$$n = N_4$$

Copyright International Organization for Standardization
Provided by IHS under license with ISO
No reproduction or networking permitted without license from IHS
Not for Resale

Byte 105

This byte shall specify the maximum read power P_4, in milliwatts, for the User Zone as a number n between 0 and 255 such that

$$n = 20\ P_4$$

Bytes 106 to 118

For the values specified in bytes 18, 19, 104 and 105, bytes 106 to 118 shall specify the parameters indicated in bytes 22 to 34.

Bytes 119 to 131

For the values specified in bytes 18, 19, 104 and 105, bytes 119 to 131 shall specify the parameters indicated in bytes 35 to 47.

Byte 132

This byte shall specify wavelength L_2, in nanometres, as a number n between 0 and 255 such that

$$n = 1/5\ L_2$$

If this byte is not set to (FF), n shall be set to 156 for ODCs according to this International Standard. This value indicates that the actual wavelength equals 780 nm ± 15 nm.

Byte 133

This byte shall specify the baseline reflectance R_2 at wavelength L_2 as a number n between 0 and 100 such that

$$n = 100\ R_2$$

Bytes 134 to 245

The allocation of information to, or the setting of, these bytes shall correspond to those of bytes 20 to 131. The values specified shall be for L_2 (byte 132) and R_2 (byte 133).

Byte 246

This byte shall specify wavelength L_3, in nanometres, as a number n between 0 and 255 such that

$$n = 1/5\ L_3$$

Byte 247

This byte shall specify the baseline reflectance R_3 at wavelength L_3 as a number n between 0 and 100 such that

$$n = 100\ R_3$$

Bytes 248 to 359

The allocation of information to, or the setting of, these bytes shall correspond to those of bytes 20 to 131. The values specified shall be for L_3 (byte 246) and R_3 (byte 247).

Bytes 360 to 363

These bytes shall be set to (FF).
(See also annex D)

Copyright International Organization for Standardization
Provided by IHS under license with ISO
No reproduction or networking permitted without license from IHS
Not for Resale

Byte 364

This byte shall specify the polarity of the figure of merit. When set to (00) it shall mean that this polarity is positive (the direction of Kerr rotation due to the written mark is clockwise).

When set to (01) it shall mean that this polarity is negative.

Byte 365

This byte shall specify the figure of merit F as a number n between 17 and 52, such that

$$n = 10\,000\,F$$

Bytes 366 to 383

These bytes shall be set to (FF). (See also annex D)

Copyright International Organization for Standardization
Provided by IHS under license with ISO
No reproduction or networking permitted without license from IHS
Not for Resale

Table 2 - Summary of media information

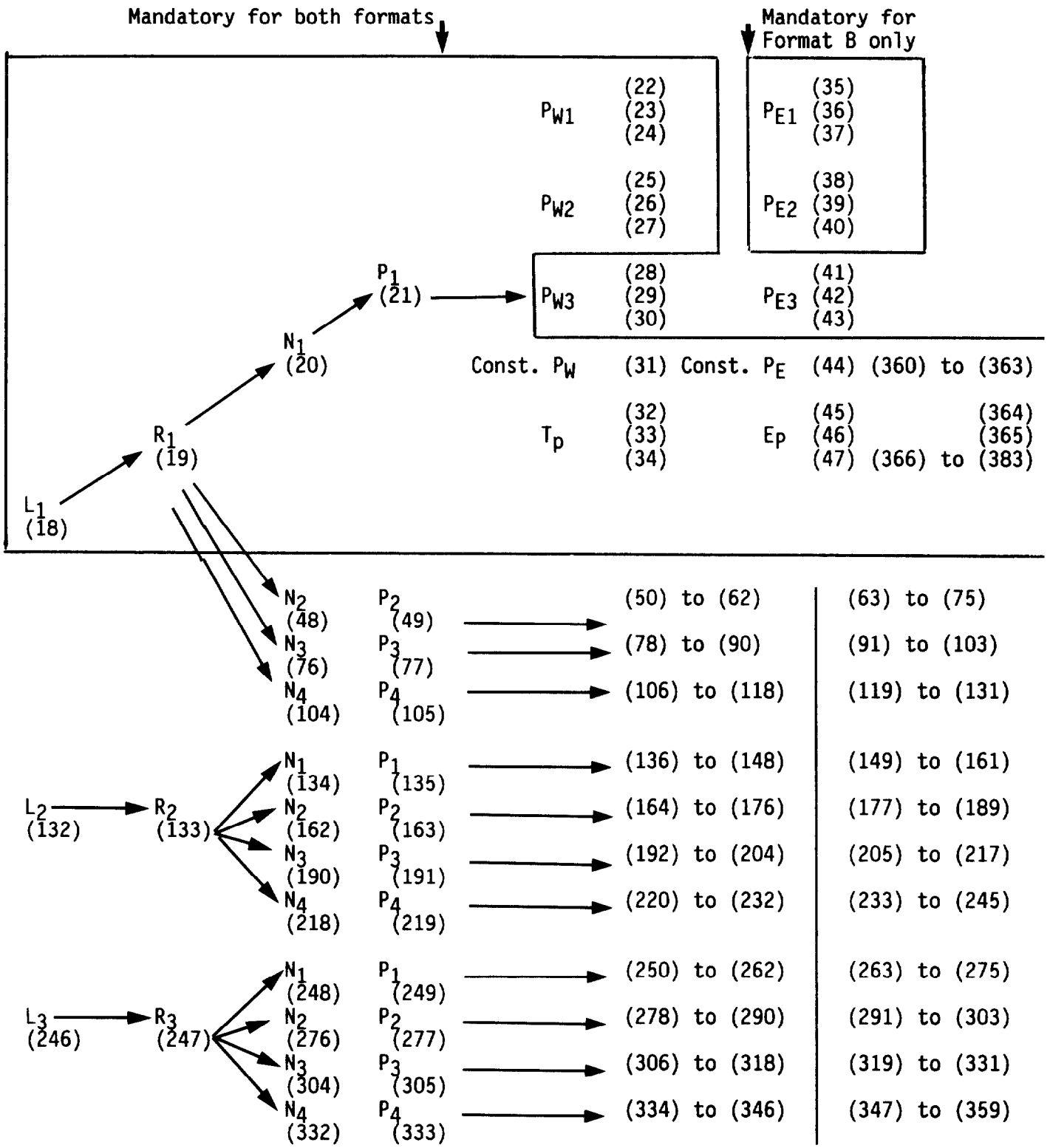

Copyright International Organization for Standardization
Provided by IHS under license with ISO
No reproduction or networking permitted without license from IHS
Not for Resale

16.5.3 System Information

Bytes 384 and 385 are mandatory, they shall specify in binary notation the track number N of the last track of the User Zone. The total number of tracks in this zone is (N + 1).

Byte 384

This byte shall specify the most significant byte of this number.

Byte 385

This byte shall specify the least significant byte of this number.

Bytes 386 to 393

These bytes shall be set to (FF).

(See also annex D).

Bytes 394 to 447

These bytes shall be set to (FF).

16.5.4 Unspecified content

The contents of bytes 448 to 511 are not specified by this International Standard. They shall be ignored in interchange.

16.6 Requirements for interchange of a user-recorded cartridge

An interchanged optical disk cartridge according to this International Standard shall satisfy the following requirements on all tracks in the User Zone (see annex K).

16.6.1 Requirements for reading

The data recorded on the disk shall be readable under the read conditions specified in bytes 18 to 21 of the SFP Zone.

16.6.2 Requirements for writing and erasing

Data may be recorded on the disk under the write and erase conditions specified in bytes 18 to 47 of the SFP Zone or under the write conditions specified in some or all of the bytes 48 to 346 if provided. In either case the so recorded data shall satisfy the requirement of 16.6.1.

17 Format A

This format is based on a continuous composite servo tracking method.

17.1 Track layout

17.1.1 Tracking

Format A is characterized by continuous tracking centred between adjacent grooves that are preformed on the disk.

All tracks shall have grooves which shall be continuous, except for ODF marks. Recording shall be on-land.

Copyright International Organization for Standardization
Provided by IHS under license with ISO
No reproduction or networking permitted without license from IHS
Not for Resale

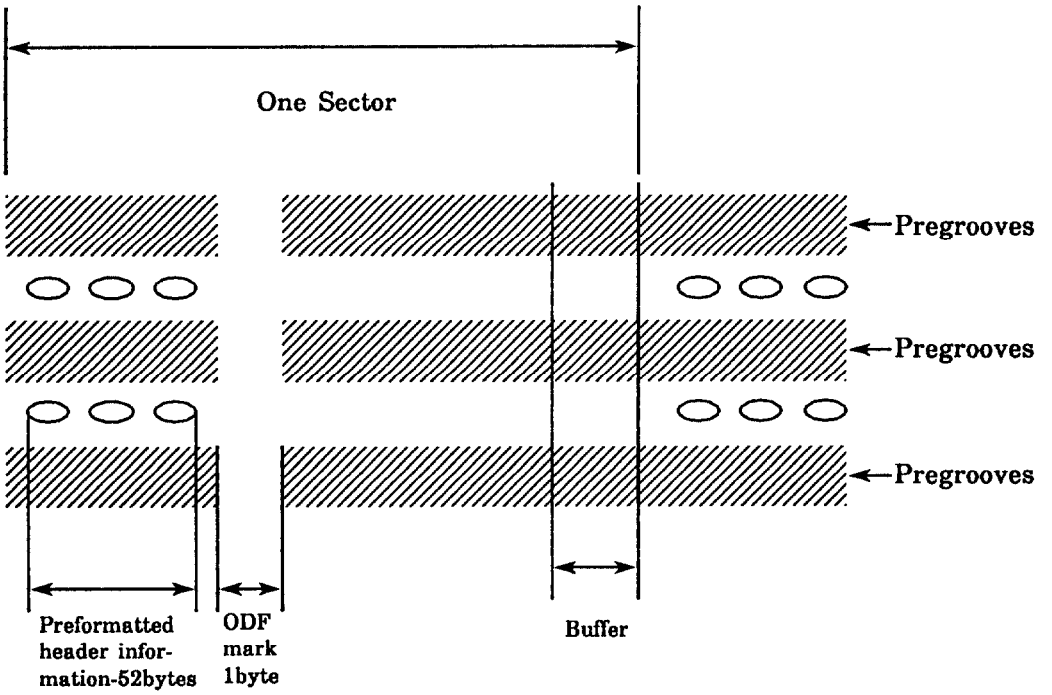

Figure 20 - Example of a sector with Offset Detection Flag for on-land recording (schematic)

17.1.2 Characteristics of pre-recorded information

The characteristics of the signals read shall refer to signals obtained at the optical head. Each of these characteristics shall be measured with beams linearly polarized both perpendicular and parallel to the grooves under the conditions specified in 15.1.1 and 15.1.2.

17.1.2.1 Groove-related signals

The following requirements shall be met (see figure 21) :

- **Cross-track maximum signal ratio**

  $0{,}70 \leq (I_1 + I_2)\,\max / (I_1 + I_2)_a \leq 1{,}00$

  where I_1 and I_2 are the outputs of the two halves of the split photo diode detector in the tracking channel (see annex A). $(I_1 + I_2)_{max}$ indicates the maximum signal when the beam crosses tracks, and $(I_1 + I_2)_a$ is the signal obtained from an unrecorded, ungrooved area.

- **Push-pull ratio**

  $0{,}40 \leq (|\, I_1 - I_2 \,|) / (I_1 + I_2)_a \leq 0{,}65$

  where $(|I_1 - I_2|)$ is the peak-to-peak amplitude of the differential output of the two halves of the split photo diode detector in the tracking channel.

- **Cross-track signal modulation ratio**

  $0{,}20 \leq [(I_1 + I_2)\max - (I_1 + I_2)\min] / (I_1 + I_2)_a \leq 0{,}60$

  Over the whole disk this ratio shall not vary by more than 3 dB.

- **Phase depth**

  The phase depth of the grooves equals

  $$\frac{n \times d}{\lambda} \times 360°$$

Copyright International Organization for Standardization
Provided by IHS under license with ISO
No reproduction or networking permitted without license from IHS
Not for Resale

where n is the index of refraction of the substrate
d is the groove depth
λ is the wavelength

The phase depth shall be less than 180°.

- **Track location**

  The tracks are located at those places on the disk where $(I_1 - I_2)$ equals zero and $(I_1 + I_2)$ has its maximum value.

- **On-track signal ratio**

  $0,7 \leq I_{ot} / I_o \leq 1,0$

  where I_{ot} is the signal in Channel 1 (see annex A) when the beam is on track. I_o is the signal in the same Channel 1 obtained from an ungrooved, unrecorded area.

17.1.2.2 Properties of pre-recorded marks

The signals specified below are obtained from Channel 1 (see annex A), and shown in figure 21.

- **Sector Mark signal** (see 17.2.1)

  The Sector Mark signal shall meet the requirement

  $| I_{sm} | / I_o \geq 0,50$

  where I_{sm} is the peak-to-peak amplitude of the read signal from the Sector Mark.

- **VFO signals** (see 17.2.2)

  The signals from the VFO_1 and VFO_2 fields shall meet the requirement

  $| I_{vfo} | / I_o \geq 0,25$

  where I_{vfo} is the peak-to-peak amplitude of the read signal from the VFO area.

  In addition the condition

  $| I_{vfo} / I_{pmax} | \geq 0,50$

  shall be satisfied within each sector, where I_p is the signal in that sector from pre-recorded marks which are not Sector Marks.

- **Address Mark, ID and PA signals** (see 17.2.3, 17.2.4 and 17.2.5)

  The signals from these fields shall meet the requirements

  $1,00 > I_p / I_o > 0,40$

  $(I_{pmax} - I_{pmin}) / I_o < 0,20$ over any one track

  These requirements apply only to such marks having a repetition rate of less than 1,4 MHz.

17.1.2.3 Parameters of the read characteristics

Figure 21 shows the different parameters for the read characteristics.

Copyright International Organization for Standardization
Provided by IHS under license with ISO
No reproduction or networking permitted without license from IHS
Not for Resale

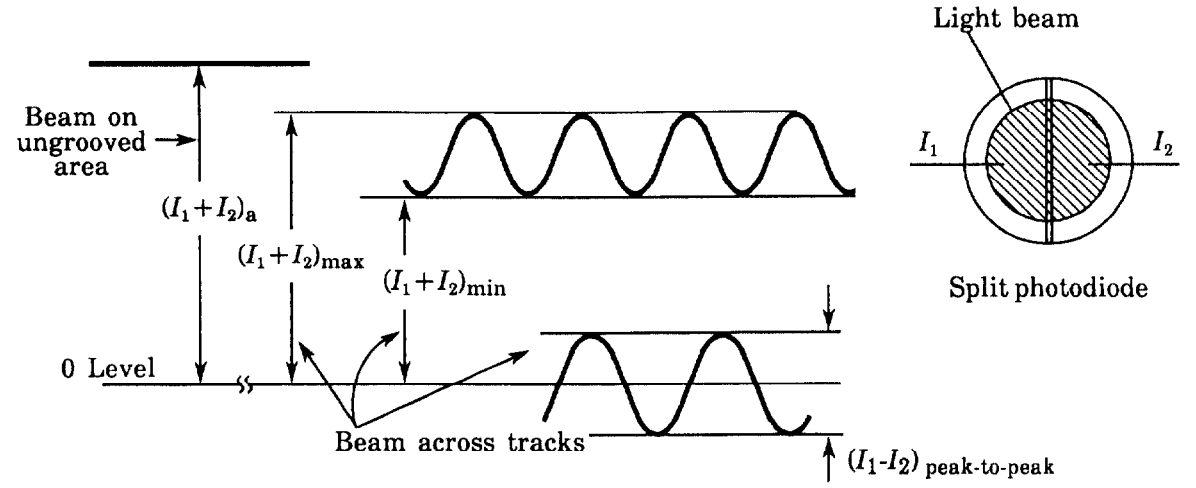

Signals from grooves in the tracking channel

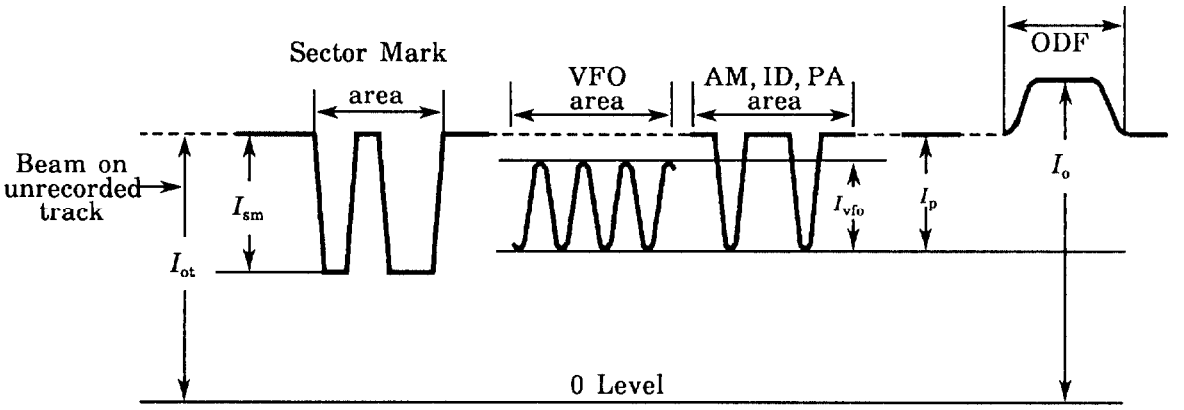

Signals from Headers in Channel 1

Figure 21 - Illustration of the various parameters for read characteristics

17.2 Sector format

Sectors shall have one of the two layouts shown in figure 22 and figure 23 depending on the number of user bytes in the Data field (see 17.2.11). When the sectors contain 1 024 user bytes, there shall be 17 sectors per track, numbered from 0 to 16; when the sectors contain 512 user bytes, there shall be 31 sectors per track numbered from 0 to 30. The number of user bytes per sector is specified by byte 1 of the PEP and the SFP Zones. The pre-formatted area of 52 bytes, the Header, is the same for both sector formats.

On the disk 8-bit bytes shall be represented by Channel bits (see 17.3).

In figure 22 and figure 23 the numbers above and below the fields indicate the number of bytes in each field.

Copyright International Organization for Standardization
Provided by IHS under license with ISO
No reproduction or networking permitted without license from IHS
Not for Resale

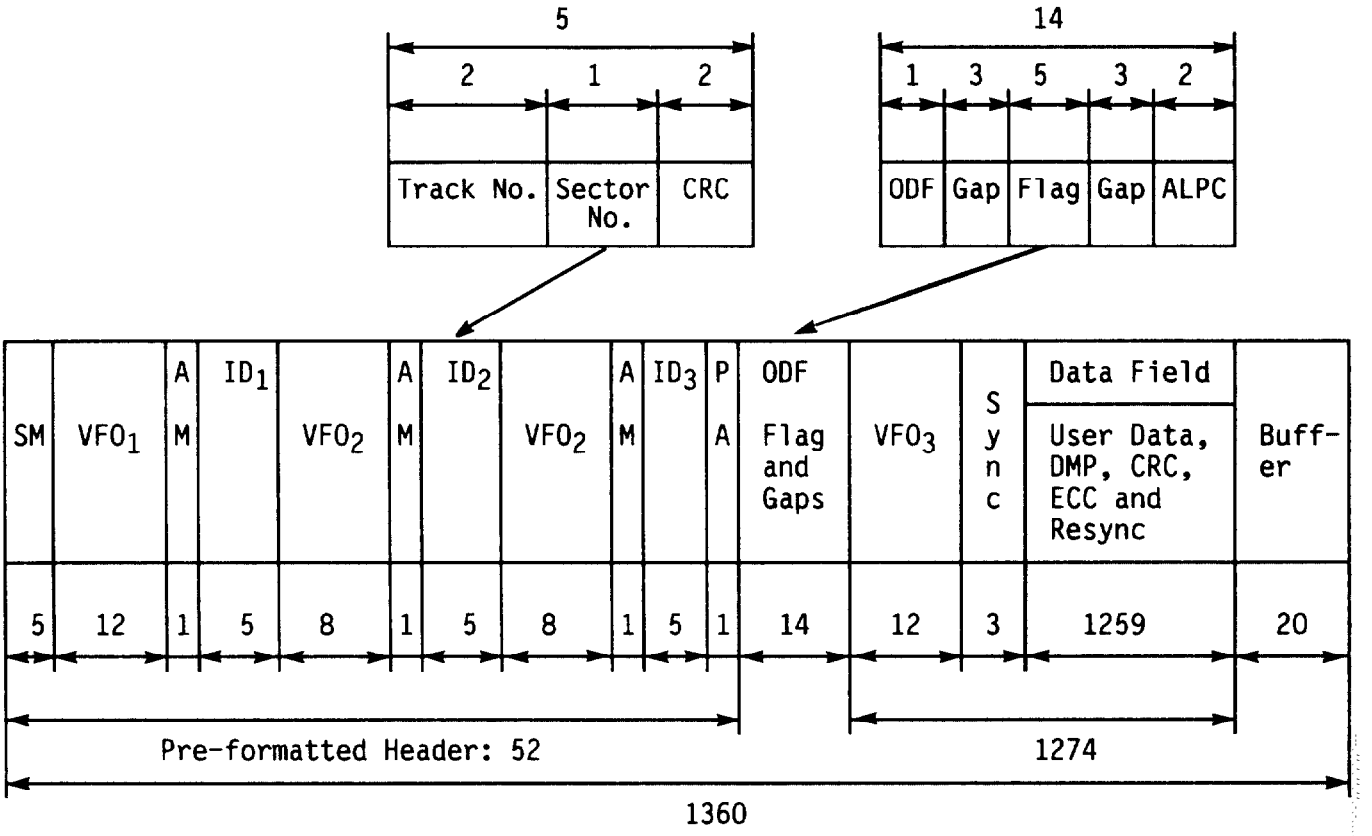

Figure 22 - Sector format for 1 024 user bytes

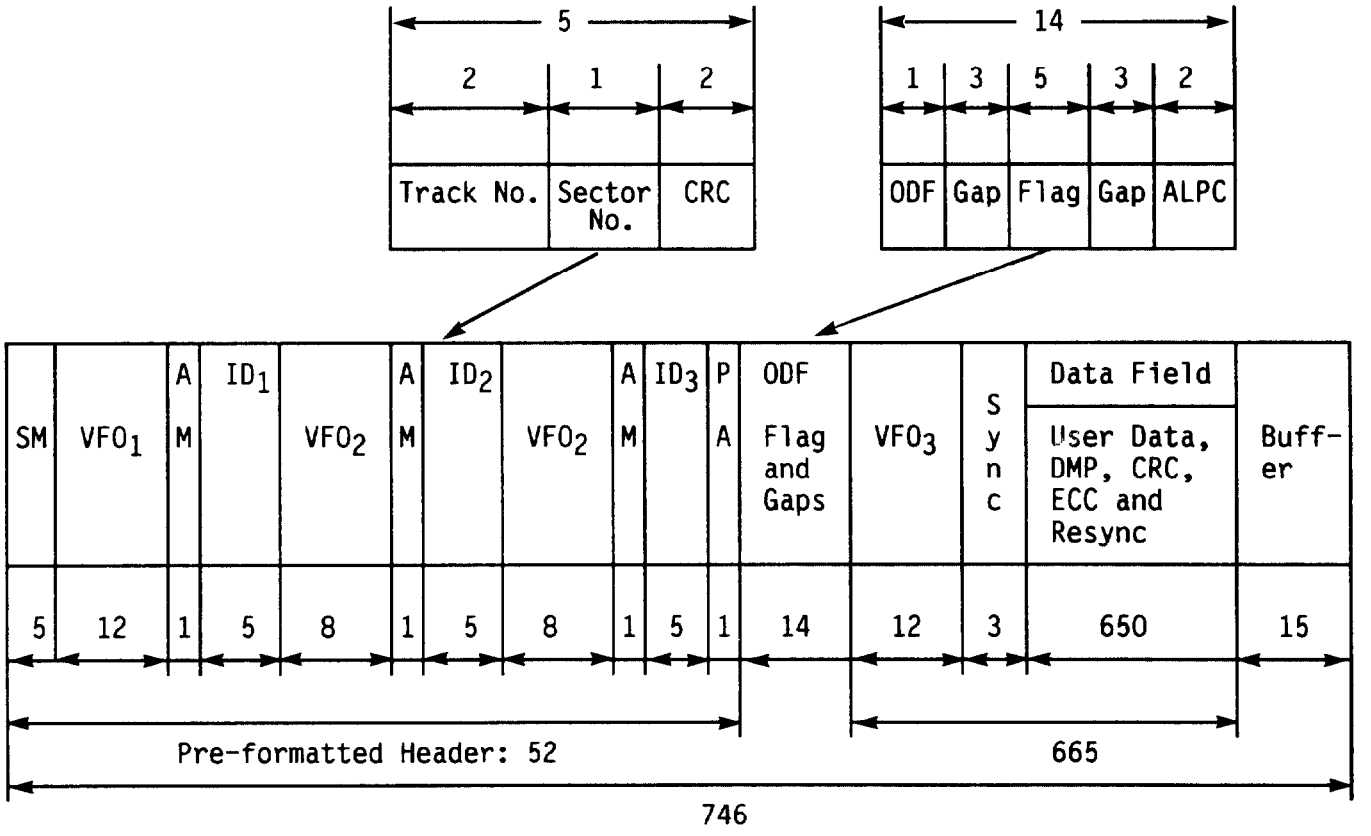

Figure 23 - Sector format for 512 user bytes

Copyright International Organization for Standardization
Provided by IHS under license with ISO
No reproduction or networking permitted without license from IHS
Not for Resale

17.2.1 Sector Mark (SM)

The Sector Mark shall have a length of 5 bytes and shall consist of pre-recorded, continuous, long marks of different Channel bits length followed by a lead-in to the VFO_1 field. This pattern does not exist in data.

The Sector Mark pattern shall be as shown in figure 24, where T corresponds to the time length of one Channel bit. The signal obtained from a mark is less than a signal obtained from no mark. The long mark pattern shall be followed by the Channel bit pattern: 00X0010010 where X can be ZERO or ONE.

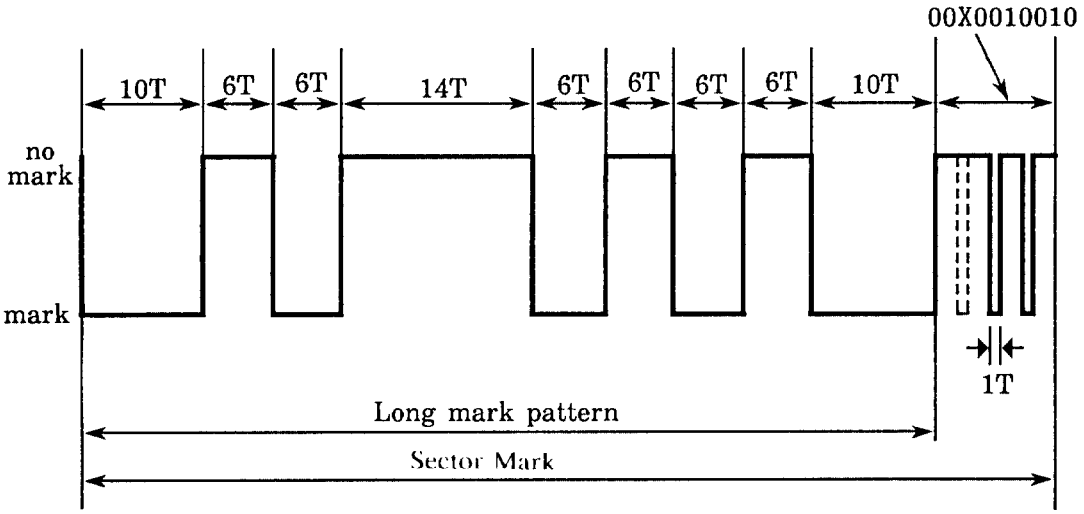

Figure 24 - Sector Mark pattern

17.2.2 VFO areas

There shall be four areas designated VFO_1, VFO_2 and VFO_3 to lock up the VFO. The recorded information for VFO_1 and VFO_3 is identical in length and pattern. VFO_2 shall be recorded with one of two patterns differing only in the first bit and shall be 4 bytes shorter than VFO_1 and VFO_3.

Since there are three ID fields, and RLL (2,7) modulation coding is used, the pattern chosen for each VFO_2 will depend on the last byte of the CRC recorded in the preceding ID field (see 17.3).

The continuous Channel bit pattern for VFO areas shall be:

VFO_1 : 192 Channel bits = 01001001001 010010
VFO_2 : 128 Channel bits = 10010010010 010010
VFO_2 : 128 Channel bits = 00010010010 010010
VFO_3 : 192 Channel bits = 01001001001 010010

17.2.3 Address Mark (AM)

The AM is a Channel bit pattern not used in RLL (2,7) and is a run-length violation for RLL (2,7). This 16-bit Channel bit pattern shall be

0100 1000 0000 0100

17.2.4 ID and CRC

This field shall consist of five bytes.

Copyright International Organization for Standardization
Provided by IHS under license with ISO
No reproduction or networking permitted without license from IHS
Not for Resale

1st Byte

This byte shall specify the most significant byte of the track number.

2nd Byte

This byte shall specify the least significant byte of the track number.

3rd Byte

bits 7 and 6 shall specify the ID number.
when set to 00 shall mean the ID_1 field,
when set to 01 shall mean the ID_2 field,
when set to 10 shall mean the ID_3 field.

bit 5 shall be set to ZERO.

bits 4 to 0 shall specify the sector number in binary notation.

4th and 5th Bytes

These two bytes shall specify a 16-bit CRC computed over the first three bytes of this field (see annex F).

17.2.5 Postamble (PA)

This field shall be an area equal in length to 16 Channel bits following the ID_3 field. Due to the use of the RLL (2,7) encoding scheme (see 17.3), the framing of the last byte of the CRC in the ID_3 field is uncertain within a few bit times. The Postamble allows the last byte of the CRC to achieve closure and permits the ID field to end always in a predictable manner. This is necessary in order to locate the following field (ODF) in a consistent manner.

17.2.6 Offset Detection Flag (ODF)

This field shall be an area equal in length to 16 Channel bits with neither grooves nor pre-formatted data.

17.2.7 Gap

This field shall consist of an unrecorded area equal in length to 48 Channel bits.

17.2.8 Flag

The content of this field is not specified by this International Standard, it shall be ignored in interchange. This field is included in the sector format only for compatibility with the sector format of ISO/IEC 9171-2 where its content is specified.

17.2.9 Auto Laser Power Control (ALPC)

This field shall consist of an unrecorded area of two bytes equal in length to 32 Channel bits. It is intended for testing the laser power level.

17.2.10 Sync

This field shall have a length equal to 48 Channel bits. It shall be recorded with the Channel bit pattern:

0100 0010 0100 0010 0010 0010 0100 0100 1000 0010 0100 1000

17.2.11 Data field

This field shall consist of either

- 1 259 bytes comprising

  1 024 user bytes

Copyright International Organization for Standardization
Provided by IHS under license with ISO
No reproduction or networking permitted without license from IHS
Not for Resale

- . 223 bytes for CRC, ECC and Resync
- . 12 bytes for control information

or

- 650 bytes comprising
  - . 512 user bytes
  - . 124 bytes for CRC, ECC and Resync
  - . 12 bytes for control information
  - . 2 (FF)-bytes.

The disposition of these bytes in the Data field is specified in annex G.

17.2.11.1 User bytes

These bytes are at the disposal of the user for recording information. There are 1 024 or 512 such bytes depending on the sector format.

17.2.11.2 CRC and ECC

The computation of the check bytes of the CRC and ECC shall be as specified in annex G.

17.2.11.3 Bytes for control information

The bytes of this 12-byte field shall be set either to (FF) or as specified in annex H.

17.2.11.4 Last bytes of the Data field of the 512-byte sector format

The last two bytes of the Data field of the 512-byte sector format shall be set to (FF).

17.2.11.5 Resync

The Resync fields shall be inserted between the bytes of the Data field as specified in annex G.

17.2.12 Buffer

This field shall have a nominal length equal to 320 Channel bits (see figure 22) or of 240 Channel bits (see figure 23). Up to 16 additional Channel bits may be written in this field to allow completion of the RLL (2,7) coding scheme (see 17.3). The remaining length is to allow for motor speed tolerances and other electrical and/or mechanical tolerances.

17.3 Recording Code

The 8-bit bytes in the three ID fields and in the Data field, except for the Resync bytes, shall be converted to Channel bits on the disk according to table 3. All other fields in a sector have already been defined in terms of Channel bits. Each ONE Channel bit shall be recorded as a mark produced by a write pulse of the appropriate power and width.

The recording code used to record all data in the formatted areas of the disk shall be the run-length limited code known as RLL (2,7).

Copyright International Organization for Standardization
Provided by IHS under license with ISO
No reproduction or networking permitted without license from IHS
Not for Resale

Table 3 - Conversion of input bits to channel bits

Input bits	Channel bits
10	0100
010	100100
0010	00100100
11	1000
011	001000
0011	00001000
000	000100

The coding shall start at the first bit of the first byte of the field to be converted. After a Resync field the RLL (2,7) coding shall start again with the first bit of the next byte of input data.

The RLL (2,7) coding can seldom be stopped at the end of the last input in a field, because of leftover bits which cannot be converted on their own. To achieve closure of the recording code, three pad bits are added at the end of the field before converting the data to Channel bits. Table 4 defines the closure for all possible combinations of leftover bits.

The ID_1 and ID_2 fields shall lead to one of the two patterns for the VFO_2.

The ID_3 field shall lead to one of two possible patterns in the PA field.

The bytes in the Data field preceding a Resync field shall lead to the Resync pattern.

17.4 Defect management

Defective sectors on the disk shall be replaced by good sectors according to the defect management scheme described below. Each side of the disk shall be initialized before use. This International Standard allows media initialization with or without certification. Defective sectors found during certification are handled by a sector slipping algorithm. Defective sectors found after initialization are handled by a linear replacement algorithm. The maximum number of defective sectors on a side of the disk that can be replaced shall be 2 048.

The User Zone on each side of the disk shall contain two Defect Management Areas (DMA) at the beginning of the zone and two DMAs at the end of the zone. Each DMA shall contain a Disk Definition Structure (DDS) with information on the structure of the disk, a Primary Defect List (PDL) and a Secondary Defect List (SDL). The user area is the area between the two groups of DMAs; it is available for user data.

17.4.1 Media initialization

During media initialization four DMAs are recorded. The user area is divided into groups, each containing data sectors and spare sectors. The spare sectors are used as replacement for defective data sectors. Media initialization can include a certification of the user area.

17.4.1.1 Media initialization with certification

The media certification consists of erasing, writing and reading all sectors from track 3 to track N-3, where N is the track number of the last track in the User Zone.

If there is no defective sector, an empty PDL or no PDL shall be recorded. In either case an empty SDL shall be recorded.

If defective sectors are found during this procedure, their addresses shall be written in ascending order in the PDL. Defective sectors shall not be used for reading or writing. If defective, a sector shall be retired, and the reference to it shall be re-directed (slipped) to

Copyright International Organization for Standardization
Provided by IHS under license with ISO
No reproduction or networking permitted without license from IHS
Not for Resale

the next good sector. This algorithm causes the reference to all subsequent sectors to be re-directed by one sector towards the end of the user area. This International Standard does not specify criteria for declaring a sector to be defective (see annex H).

Of the total number of sectors available, 2048 sectors are allocated to provide space for the maximum possible number of defective sectors that could be detected during certification After certification the good sectors in the user area from track 3 to track N-3 shall be divided into g groups of equal size. Each group shall comprise n data sectors followed by m spare sectors. The values of g, m and n are selected by the user and shall satisfy the following condition:

$$1 \leq g \leq 2\,048$$

- for 1 024-byte sectors: $g \times (m+n) \leq 17 \times (N-5) - 2\,048$
- for 512-byte sectors: $g \times (m+n) \leq 31 \times (N-5) - 2\,048$

The remaining sectors not included in the g groups shall be located after the last group. The values of g, n and m shall be recorded in the DDS. The PDL and the SDL shall be recorded as specified in 17.4.3.2 and 17.4.3.3.

17.4.1.2 Media initialization without certification

The user area from track 3 to track N-3 shall be divided in g groups of equal size. N is the track number of the last track in the User Zone. Each group shall comprise n data sectors followed by m spare sectors. The values of g, m and n are selected by the user and shall satisfy the following condition:

$$1 \leq g \leq 2\,048$$

- for 1 024-byte sectors: $g \times (m+n) \leq 17 \times (N-5) - 2\,048$
- for 512-byte sectors: $g \times (m+n) \leq 31 \times (N-5) - 2\,048$

The remaining sectors not included in the g groups shall be located after the last group.

The values of g, n and m shall be recorded in the DDS. An empty PDL or no PDL shall be recorded. If an empty PDL is recorded, byte 3 of the DDS shall be set to (01). If no PDL is recorded, byte 3 of the DDS shall be set to (02). An empty SDL shall be recorded.

17.4.2 Write and read procedure

When writing or reading data in the sectors of a group, all defective sectors listed in the PDL shall be skipped and those listed in the SDL shall be replaced. If during or after writing, a data sector is found to be defective, it shall be rewritten in the first available spare sector of the group. If there are no spare sectors left in that group, the defective sector shall be rewritten in the first available spare sector in one of the nearest groups. If the replacement sector is found to be defective, the sector shall be rewritten in the next available spare sector. The address of the defective sector and the address of the replacement sector shall be written in the SDL. There shall be no entries in the SDL pointing to a defective replacement sector. The total number of defective sectors that are identified in the PDL and SDL shall not exceed 2048.

17.4.3 Layout of the User Zone

The User Zone shall contain four DMAs in tracks 0, 1, 2, N-2, N-1 and N, and a user area from track 3 to track N-3. N is the track number of the last track in the User Zone. The division of the user area into groups is specified in 17.4.1.1 or 17.4.1.2.

The length of each DMA is 25 sectors for 1 024-byte sectors and 46 for 512-byte sectors. The address of the first sector of each DMA is given by

Copyright International Organization for Standardization
Provided by IHS under license with ISO
No reproduction or networking permitted without license from IHS
Not for Resale

	1 024-byte sector		512-byte sector	
	track No	sector No	track No	sector No
DMA1	0	0	0	0
DMA2	1	8	1	15
DMA3	N-2	0	N-2	0
DMA4	N-1	8	N-1	15

The last sector of track 2 and of track N shall not be used.

Each DMA shall contain a DDS and an SDL, and may contain a PDL. If recorded, all four PDLs shall be identical. The SDLs shall be identical.

After initialization, each DMA shall have the following content. The first sector shall contain the DDS. The second sector shall be the first sector of the PDL if it has been recorded. The length of a PDL is determined by the number of entries in it. The SDL shall begin in the sector following the last sector of the PDL. If there is no PDL, it shall begin in the second sector of the DMA. The length of the SDL is determined by the number of entries in it. The contents of the remaining sectors of the DMAs after the SDL shall be ignored on interchange.

The start address of a PDL and that of the SDL within each DDS shall reference the PDL and the SDL in the same DMA.

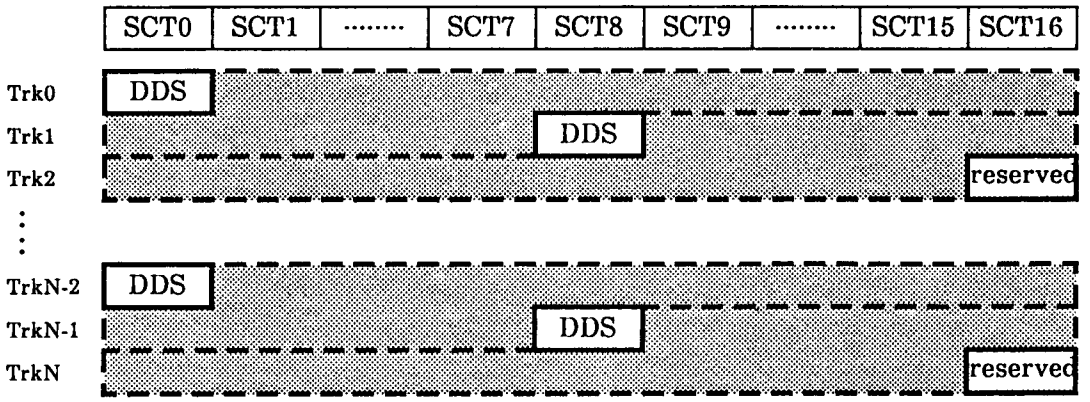

Figure 25 - Sector assignment of the DMAs for the 1 024-byte format

Copyright International Organization for Standardization
Provided by IHS under license with ISO
No reproduction or networking permitted without license from IHS
Not for Resale

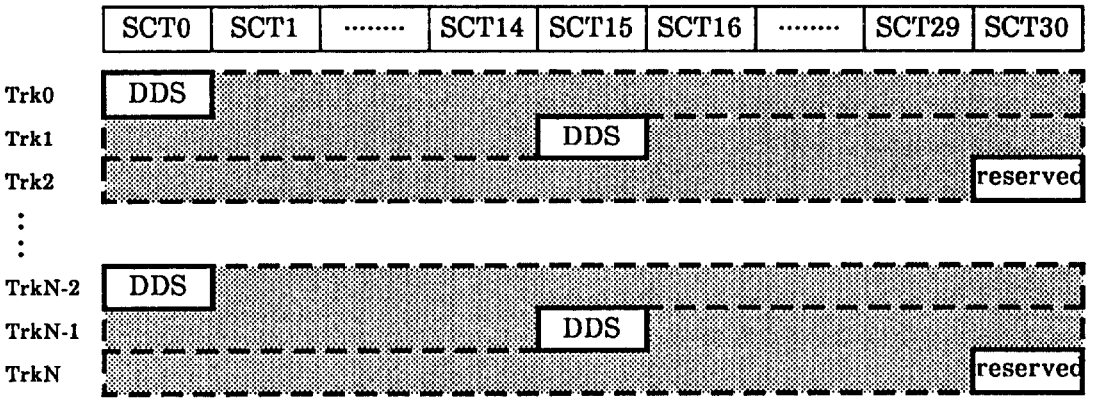

Figure 25 - Sector assignment of the DMAs for the 512-byte format

17.4.3.1 Disk Definition Structure (DDS)

The Disk Definition Structure (DDS) shall be contained in the first sector of each DMA as shown in table 4.

Table 4 - Byte assignment of the Disk Definition Structure

Byte No.	Description
0	(0A) (DDS identifier MSB)
1	(0A) (DDS identifier LSB)
2	(00)
3	(01) A PDL has been recorded (02) No PDL has been recorded
4	g, Number of groups (MSB)
5	g, Number of groups (LSB) ($g \leq 2048$)
6	n, Number of data sectors per group (MSB)
7	n, Number of data sectors per group
8	n, Number of data sectors per group
9	n, Number of data sectors per group (LSB)
10	m, Number of spare sectors per group (MSB)
11	m, Number of spare sectors per group
12	m, Number of spare sectors per group
13	m, Number of spare sectors per group (LSB)
14	Start of PDL, track number (MSB)
15	Start of PDL, track number
16	Start of PDL, track number (LSB)
17	Start of PDL, sector number
18	Start of SDL, track number (MSB)
19	Start of SDL, track number
20	Start of SDL, track number (LSB)
21	Start of SDL, sector number

All remaining bytes in this sector shall be set to (00).

If byte 3 is set to (02), bytes 14 to 17 shall be set to (FF).

Copyright International Organization for Standardization
Provided by IHS under license with ISO
No reproduction or networking permitted without license from IHS
Not for Resale

17.4.3.2 Primary Defect List (PDL)

The PDL shall consist of bytes specifying

- a defect list identifier set to (01) for the PDL;
- the length of the PDL;
- the sector addresses of defective sectors in ascending order of sector addresses.

Table 5 shows the PDL byte layout. All remaining bytes of the last sector in which the PDL is recorded, shall be set to (FF). If no defective sectors are detected, then the first defective sector address is set to (FF) and the list length bytes are set to (00).

Table 5 - Primary Defect List

Byte No.	Description
0	(00)
1	(01) (Defect List identifier)
2	Number of entries MSB (each entry is 4 bytes long)
3	Number of entries LSB
4	Address of the first defective sector (track number MSB)
5	Address of the first defective sector (track number)
6	Address of the first defective sector (track number LSB)
7	Address of the first defective sector (sector number)
.	.
.	.
.	.
n-3	Address of the nth defective sector (track number MSB)
n-2	Address of the nth defective sector (track number)
n-1	Address of the nth defective sector (track number LSB)
n	Address of the nth defective sector (sector number)

17.4.3.3 Secondary Defect List (SDL)

The SDL is used to record the addresses of sectors which have become defective after initialization and those of their respective replacements. Eight bytes are used for each entry. The first 4 bytes specify the address of the defective sector and the next 4 bytes specify the address of the replacement sector.

The SDL shall consist of bytes identifying the SDL, specifying the length of the SDL, and of a list containing the addresses of defective sectors and those of their replacement sectors. The addresses of the defective sectors shall be in ascending order. Table 6 shows the SDL layout. All remaining bytes of the last sector in which the SDL is recorded shall be set to (FF). An empty SDL shall consist of bytes 0 to 9 as shown in table 6; bytes 8 and 9 shall be set to (00).

Copyright International Organization for Standardization
Provided by IHS under license with ISO
No reproduction or networking permitted without license from IHS
Not for Resale

Table 6 - Secondary Defect List

Byte No.	Description
0	(00)
1	(02) (Defect List identifier)
2	(00)
3	(01)
4	MSB of the list length specified in number of bytes from byte 6 to byte x-1
5	LSB of the list length
6	(02) (SDL)
7	(01)
8	MSB of the list length specified in number of bytes from byte 10 to byte x-1
9	LSB of the list length LSB
10	Address of the first defective sector (track number, MSB)
11	Address of the first defective sector (track number)
12	Address of the first defective sector (track number, LSB)
13	Address of the first defective sector (sector number)
14	Address of the first replacement sector (track number, MSB)
15	Address of the first replacement sector (track number)
16	Address of the first replacement sector (track number, LSB)
17	Address of the first replacement sector (sector number)
.	.
.	.
.	.
x-8	Address of the last defective sector (track number, MSB)
x-7	Address of the last defective sector (track number)
x-6	Address of the last defective sector (track number, LSB)
x-5	Address of the last defective sector (sector number)
x-4	Address of the last replacement sector (track number, MSB)
x-3	Address of the last replacement sector (track number)
x-2	Address of the last replacement sector (track number, LSB)
x-1	Address of the last replacement sector (sector number)

17.4.4 Summary of the location of the zones on the disk

Figure 27 summarizes the location of the zones.

Copyright International Organization for Standardization
Provided by IHS under license with ISO
No reproduction or networking permitted without license from IHS
Not for Resale

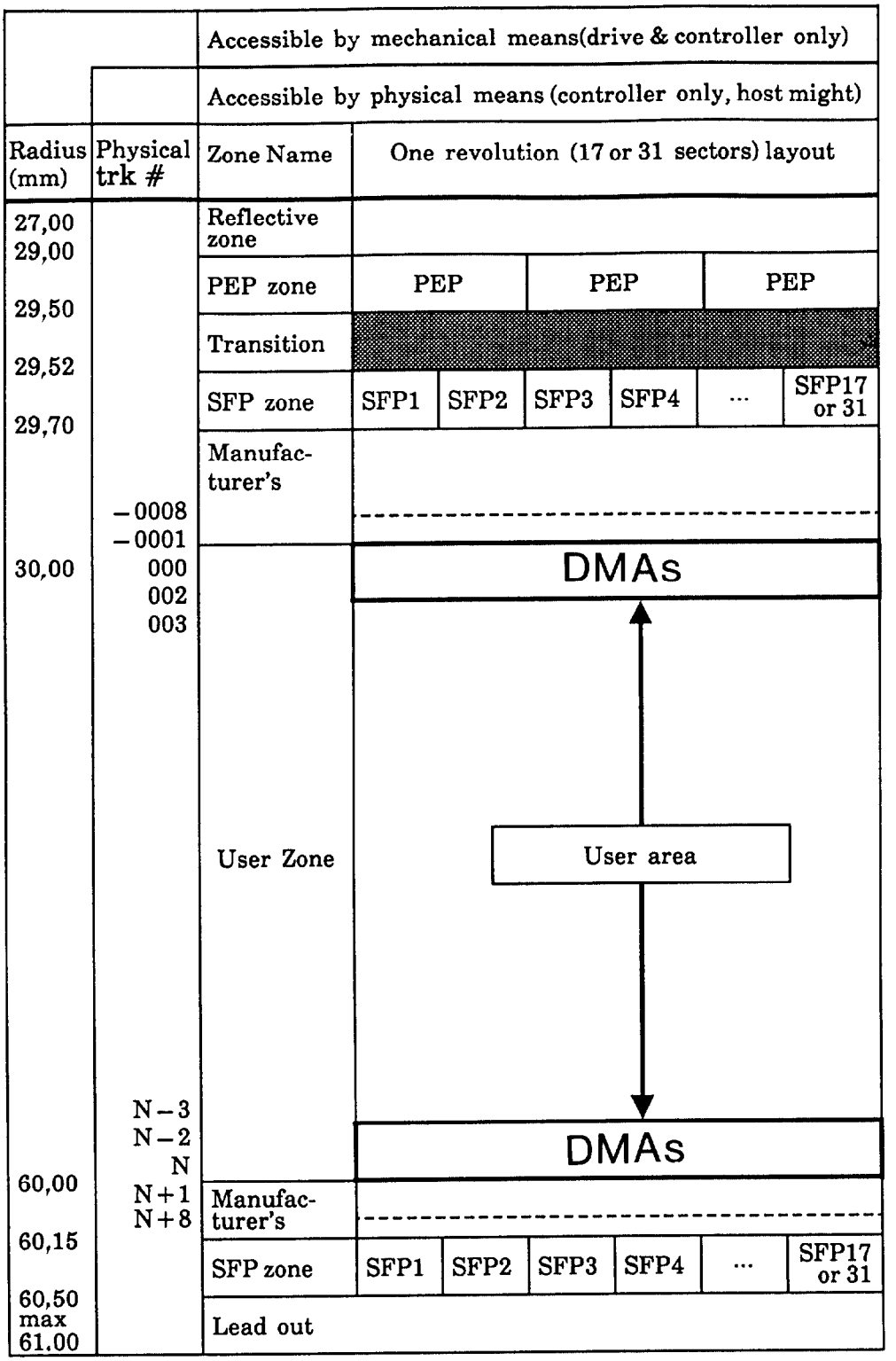

Figure 27 - Location of the defined zones

Copyright International Organization for Standardization
Provided by IHS under license with ISO
No reproduction or networking permitted without license from IHS
Not for Resale

18 Format B

This format is based on a sampled servo tracking method.

18.1 Track layout

18.1.1 Servo format

18.1.1.1 Each track contains pre-recorded headers and servo areas.

18.1.1.2 A servo area consists of two groups each 15 Channel bits long (see figure 27).

18.1.1.3 The clock signal is derived from the repetition of a pre-recorded mark in position 12 of the second servo group.

18.1.1.4 The focus error signal can be obtained by any method, either in a continuous mode or preferably in a sampled mode, where the sample is taken in the Unique Distance Part of the servo area.

18.1.1.5 The tracking error signal is derived from the signal amplitude difference at the first two wobble marks in the servo area. These wobble marks are located at positions 3 or 4 and position 8 in the first servo group.

18.1.1.6 Fast-seek information is derived from the location of the first wobble mark in the first servo group. Every 16 tracks the position of the first wobble mark changes from position 3 to position 4 or from position 4 to position 3 (seek toggle). Tracks numbered (K + 16 (N - 1)), where K = 1 to 16, have the first wobble mark in position 3 if N is odd and in position 4 if N is even.

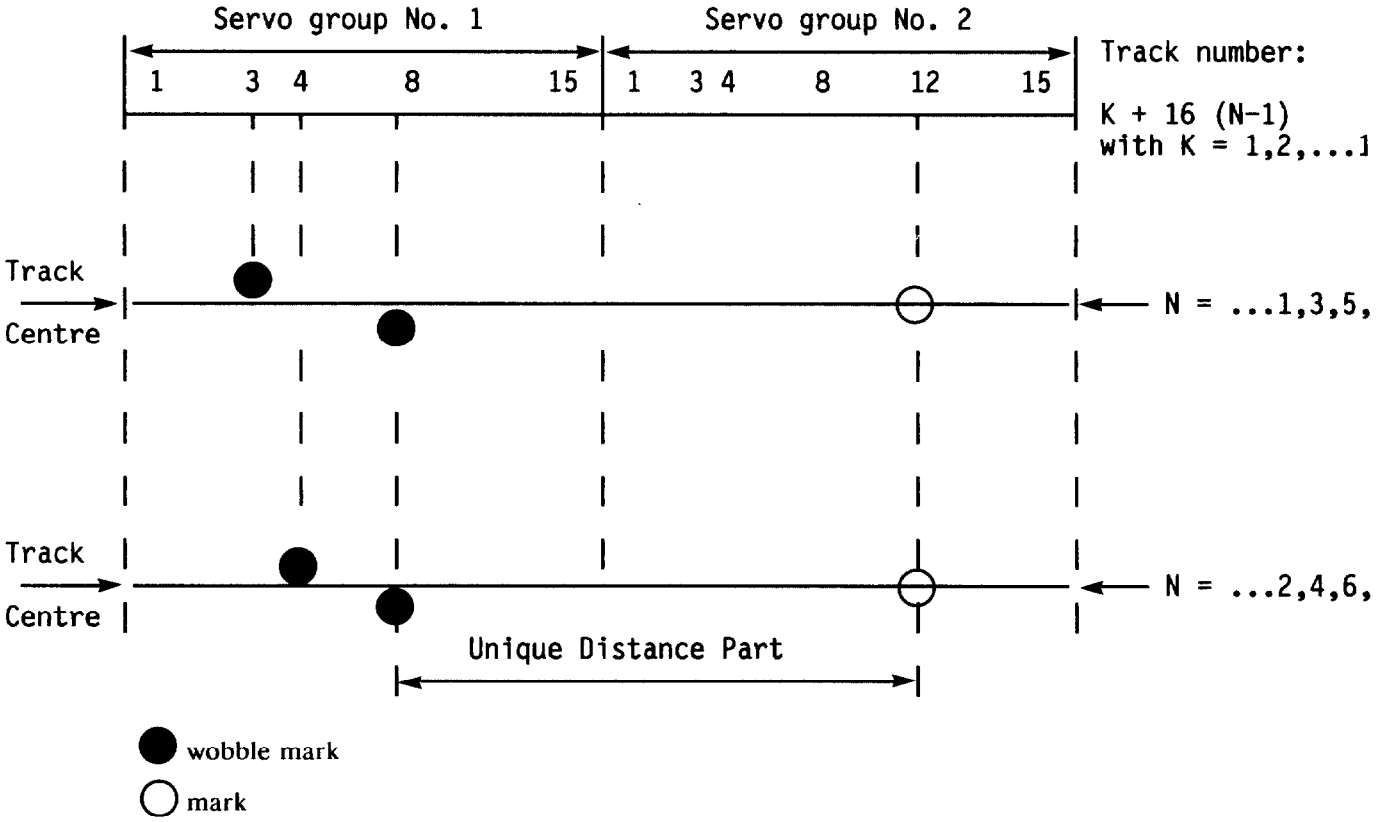

Figure 28 - Layout of the servo area

NOTE 4 For future performance improvements of access times, the scheme may be expanded by adding an extra pit at a location between No. 3 and No. 8 in servo group No. 1 with keeping compatibility with this format. Therefore this area should not be used as mirror mark on playback.

Copyright International Organization for Standardization
Provided by IHS under license with ISO
No reproduction or networking permitted without license from IHS
Not for Resale

18.1.2 Properties of pre-recorded signals

18.1.2.1 The standard optical conditions for measuring the parameters are specified in 15.1.1. The amplitudes in this clause shall be measured in Channel 1 (see annex A).

18.1.2.2 The amplitude of pre-recorded signals, except for the wobble marks, while tracking at track centre shall be negative and their absolute values shall not be less than 0,40 I_0. Over a track the variation of these values shall be within 0,20 I_0, where I_0 is the signal obtained from an unrecorded area.

18.1.2.3 The full width at half maximum amplitude of all pre-recorded signals recorded at a frequency lower than 1,4 MHz at a rotational frequency of 30 Hz shall be less than 2,3 times the length of a Channel bit.

18.1.2.4 The average signal amplitude of the first wobble mark (position 3 or 4) and the average signal amplitude of the second wobble mark (position 8) shall be negative and their absolute values shall:

- be not less than 0,40 I_0 while tracking on the line connecting them; the variation of this value over a track shall be within 0,20 I_0,
- be within 5% whilst tracking at track centre,
- differ by (0,15 ± 0,05) I_0 whilst tracking with an offset of 0,10 µm from the track centre.

18.1.2.5 The wobble marks are located approximately 1/4 track pitch off the track centre. The first wobble mark (position 3 or 4) is offset towards the centre of the disk, the second wobble mark (position 8) towards the outer radius.

18.1.2.6 The displacement of the pre-recorded marks, from their intended position as determined by the repetition of the clock marks shall not exceed 0,1 Channel bit length.

18.1.2.7 The jitter of the clock marks shall not exceed:

- track-to-track : 1/4 Channel bit,
- in-track high frequency : 1/30 Channel bit,
- in-track low frequency : 1/4 Channel bit.

18.2 Data structure

18.2.1 Track format

A track shall be divided into 32 sectors and shall start with sector 0 and end with sector 31.

18.2.2 Sector format

A sector shall be divided into 43 segments of 18 bytes each. The first two bytes of each segment shall be a servo area and the next 16 bytes of each segment shall contain data. The data in the first segment shall be the Sector Header of 16 bytes. The data in the remaining 42 segments constitute the data field of 42 x 16 = 672 bytes.

18.2.2.1 Sector Header

The Sector Header shall contain the following pre-recorded information (except in bytes 7 to 15) in 4/15 recording code.

Byte 0: Sync Mark; M1F in 4/15 modulation
Byte 1: sector number; (value 0 to 31)
Bytes 2 and 3: track number; (MSB, LSB)
Bytes 4 and 5: track number; LSB, MSB in ONE's complement
Byte 6: track number; LSB in ONE's complement
Bytes 7 to 12: unrecorded; unused

Copyright International Organization for Standardization
Provided by IHS under license with ISO
No reproduction or networking permitted without license from IHS
Not for Resale

Bytes 13 to 15: Laser Power Control field; not pre- recorded

The Sync Mark allows the drive to obtain sector synchronization (see table 9 for the Channel bit pattern of M1F).

The Sector Address constituted by the sector and track numbers together with the track number in ONE's complement and the additional track number LSB in ONE's complement facilitate fast and reliable random access.

NOTE 5 As the Sector Header is not protected by ECC, it is expected that drives will maintain a running check of sector addresses during tracking.

The Laser Power Control field is intended to allow the drive to calibrate its write power. This field is initially unrecorded and may contain undefined data after use.

18.2.2.2 Data field

The Data field of a sector shall be subdivided into

- user data 524 bytes, numbered 0 to 523
- defect management pointers (DMP)
- error detection and correction data 148 bytes

The number of DMP bytes is specified in the defect management track (DMT) ; it shall be between 1 and 12 (see 18.2.5.7).

All bytes of the data field are equally protected by a Reed-Solomon error correction product code.

Transferred left-to-right, top-to-bottom

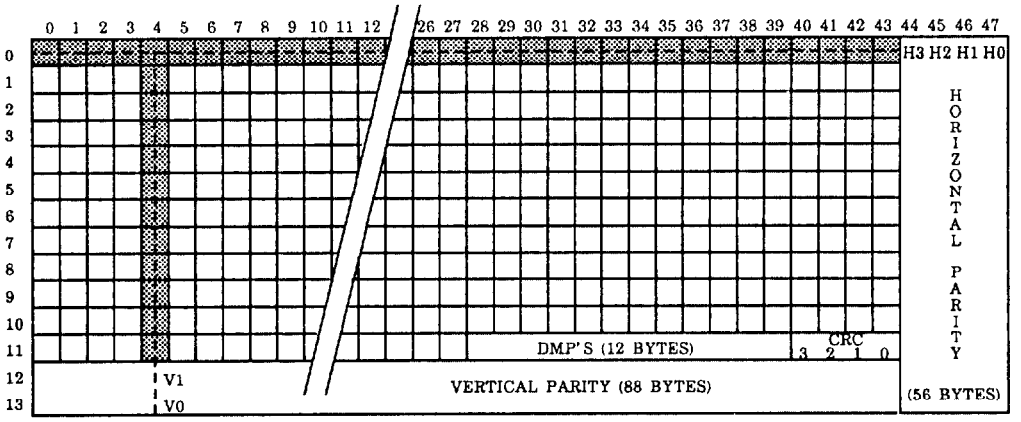

User Data	512
DMPs	12
CRC	4
Horizontal Parity	56
Vertical Parity	88
	672 bytes

Figure 29 - Layout of a sector with 12 DMP bytes

Copyright International Organization for Standardization
Provided by IHS under license with ISO
No reproduction or networking permitted without license from IHS
Not for Resale

18.2.3 Error detection and correction

The error detection and correction data allows for various implementation strategies in the drive and controller. Depending on the type of applications and the type of media recommended, the correction strategy can be optimized for performance in the drive.

18.2.3.1 Error correction code

For error correction purposes, the Data field is mapped onto a two-dimensional matrix of 48 columns (vertical code words) and 14 rows (horizontal code words) (see figure 29).

Each row is a Reed-Solomon code word of 48-byte symbols, four of which are parity. The four parity bytes (H_3, H_2, H_1, H_0) are located at the right-most part of each row. The horizontal code word generator polynomial is

$$G(x) = \prod_{i=0}^{i=3} (x + \alpha^i)$$

in which α is the element of the Galois field generated by the primitive polynomial

$$Gp(x) = x^8 + x^4 + x^3 + x^2 + 1$$

The row parity bytes are the residual of the division of the information polynomial by the generator polynomial. The highest order symbol of the information polynomial shall be the data placed in the left-most column while the lowest-order symbol of it shall be the data placed in the column which is closest to the area for the parity check symbols. The information polynomial does not contain powers 0 to 3 of α.

The highest-order symbol of the residual polynomial shall be placed in the left-most column of the area for the parity check symbols, while the zero-th order of it shall be placed in the right-most column.

Each column is a Reed-Solomon code word of 14 byte symbols, two of which are parity. The two parity bytes (V_1, V_0) are located at the bottom part of each column. The vertical code word generator polynomial is $(x + \alpha^0)(x + \alpha^1)$ in which α is the same as for the horizontal code words.

The column parity bytes are the residual of the division of the information polynomial by the generator polynomial.

The highest order symbol of the information polynomial shall be the data placed at the top row while the lowest order symbol of it shall be the data placed in the row which is closest to the area for the parity check symbols. The information polynomial does not contain powers 0 and 1 of α.

The highest order symbol of the residual polynomial shall be placed at the top row of the area for the parity check symbols while the zero-th order of it shall be placed in the bottom row. Each byte of the data field is part of two code words, one horizontal and one vertical.

The first byte received by the drive to form a two-dimensional matrix shall be placed in the top left corner of the matrix; the successive bytes are allocated from left to right and from top to bottom forming a 12 x 44 matrix.

The data is written on the disk in horizontal code word symbol sequence (ascending order). This means that the first symbol in the Data field of a sector is byte 0 of horizontal code word 0, the second symbol in the Data field is byte 1 of horizontal code word 0, and the last symbol in the data field is byte 47 of horizontal code word 13.

Copyright International Organization for Standardization
Provided by IHS under license with ISO
No reproduction or networking permitted without license from IHS
Not for Resale

18.2.3.2 Cyclic redundancy check (CRC)

For additional detection and correction capabilities, CRC-like information of four bytes is added. This CRC functions only for user data and DMP. The CRC symbols are defined as the parity symbols of a Reed-Solomon-like code word consisting of the 524 bytes of user data and DMP as information bytes.

The code word generator polynomial is $(x + \alpha^4)(x + \alpha^5)(x + \alpha^6)(x + \alpha^7)$, where α is the same as defined for the horizontal Reed-Solomon code word.

18.2.4 Recording method

18.2.4.1 Recording code

The 4/15 recording code maps 1 byte of user data onto 15 Channel bits using only four written marks. The symbols in the 4/15 code are constructed in such a way that in the case of user data the most and least significant 4 bits of a byte are generated independently of each other, except in the case where one of these 4-bit bytes is equal to (F). Tables 7 and 8 show the 4/15 symbols for the user data.

Thirty combinations which obey the rules of the code are reserved for possible special functions. The 4/15 symbols for special functions are shown in table 9.

18.2.4.2 Position accuracy of the user-written marks

The displacement of the user-written marks, from their intended positions, as determined by the repetition of the clock marks, shall not exceed 0,1 Channel bit length. Identifiable contributions from irregularities in the media format, defects and media-related eccentricity are excluded.

Copyright International Organization for Standardization
Provided by IHS under license with ISO
No reproduction or networking permitted without license from IHS
Not for Resale

Table 7 - 4/15 recorded symbols for the least significant 4 bits of a user data byte

LSB	Mark positions														
	1	2	3	4	5	6	7	8	9	10	11	12	13	14	15
(0)	x				x										
(1)	x						x								
(2)	x								x						
(3)	x										x				
(4)	x												x		
(5)			x				x								
(6)			x						x						
(7)			x								x				
(8)			x										x		
(9)					x				x						
(A)					x						x				
(B)					x								x		
(C)							x				x				
(D)							x						x		
(E)									x				x		

MSB	LSB	Mark positions														
		1	2	3	4	5	6	7	8	9	10	11	12	13	14	15
(0)	(F)	x	x	x			x									
(1)	(F)	x	x	x					x							
(2)	(F)	x	x	x							x					
(3)	(F)	x	x	x									x			
(4)	(F)	x	x	x											x	
(5)	(F)			x	x	x			x							
(6)	(F)			x	x	x					x					
(7)	(F)			x	x	x							x			
(8)	(F)			x	x	x									x	
(9)	(F)					x	x	x			x					
(A)	(F)					x	x	x					x			
(B)	(F)					x	x	x							x	
(C)	(F)							x	x	x			x			
(D)	(F)							x	x	x					x	
(E)	(F)									x	x	x			x	
(F)	(F)								x	x	x			x		

--`,,```,,,,````-`-`,,`,,`,`,,`---

Copyright International Organization for Standardization
Provided by IHS under license with ISO
No reproduction or networking permitted without license from IHS
Not for Resale

Table 8 - 4/15 recorded symbols for the most significant 4 bits of a user data byte

MSB	Mark positions														
	1	2	3	4	5	6	7	8	9	10	11	12	13	14	15
(0)		x				x									
(1)		x						x							
(2)		x								x					
(3)		x										x			
(4)		x												x	
(5)				x				x							
(6)				x						x					
(7)				x								x			
(8)				x										x	
(9)						x				x					
(A)						x						x			
(B)						x								x	
(C)								x				x			
(D)								x						x	
(E)										x				x	

MSB	LSB	Mark positions														
		1	2	3	4	5	6	7	8	9	10	11	12	13	14	15
(F)	(0)	x			x	x	x									
(F)	(1)	x					x	x	x							
(F)	(2)	x							x	x	x					
(F)	(3)	x									x	x	x			
(F)	(4)	x											x	x	x	
(F)	(5)			x			x	x	x							
(F)	(6)			x					x	x	x					
(F)	(7)			x							x	x	x			
(F)	(8)			x									x	x	x	
(F)	(9)					x			x	x	x					
(F)	(A)					x					x	x	x			
(F)	(B)					x							x	x	x	
(F)	(C)							x			x	x	x			
(F)	(D)							x					x	x	x	
(F)	(E)									x			x	x	x	
(F)	(F)								x	x	x			x		

Copyright International Organization for Standardization
Provided by IHS under license with ISO
No reproduction or networking permitted without license from IHS
Not for Resale

Table 9 - 4/15 recorded symbols reserved for special functions

FLAG	MSB	LSB	Mark positions														
			1	2	3	4	5	6	7	8	9	10	11	12	13	14	15
M	(0)	(F)		x			x	x	x								
M	(1)	(F)		x					x	x	x						
M	(2)	(F)		x							x	x	x				
M	(3)	(F)		x									x	x	x		
M	(5)	(F)				x			x	x	x						
M	(6)	(F)				x					x	x	x				
M	(7)	(F)				x							x	x	x		
M	(9)	(F)						x			x	x	x				
M	(A)	(F)						x					x	x	x		
M	(C)	(F)								x			x	x	x		
M	(F)	(5)		x	x	x			x								
M	(F)	(6)		x	x	x					x						
M	(F)	(7)		x	x	x							x				
M	(F)	(8)		x	x	x									x		
M	(F)	(9)				x	x	x			x						
M	(F)	(A)				x	x	x					x				
M	(F)	(B)				x	x	x							x		
M	(F)	(C)						x	x	x			x				
M	(F)	(D)						x	x	x					x		
M	(0)	(0)	x	x	x	x											
M	(1)	(1)		x	x	x	x										
M	(2)	(2)			x	x	x	x									
M	(3)	(3)				x	x	x	x								
M	(4)	(4)					x	x	x	x							
M	(5)	(5)						x	x	x	x						
M	(6)	(6)							x	x	x	x					
M	(7)	(7)								x	x	x	x				
M	(8)	(8)									x	x	x	x			
M	(9)	(9)										x	x	x	x		
M	(A)	(A)											x	x	x	x	

18.2.5 Defect management

The defect management defines the method of handling defective sectors detected during the write and/or verify process. Small errors in a sector are corrected by the error detection and correction code (EDAC) during the read process (see 18.2.3). Large defects result in the retirement of the sector and a rewrite of its contents in a spare sector of an alternative area.

The defect management is based on a sector replacement scheme with an optional certification of the medium. The addresses of the defective sectors and their replacement sectors shall be recorded in maps. As an option, the connection between the sectors can also be given by pointers recorded in the sectors themselves.

18.2.5.1 Media initialization

The User Zone of the disk shall be divided in up to 63 bands, each of which consists of three areas: a primary area for recording data sectors, an alternative area for rewriting defective sectors and a map area for recording the link between the defective sector and the

Copyright International Organization for Standardization
Provided by IHS under license with ISO
No reproduction or networking permitted without license from IHS
Not for Resale

replacement sector. It is allowed to define overflow bands with only an alternative area and a map area.

The partitioning of the User Zone shall be recorded in the Defect Management Track (DMT). If there is embossed data in the User Zone, the manufacturer must have recorded the DMT.

18.2.5.2 Initialization with certification

As an option, the primary areas may be certified before use. In this case any defective sector found in the primary area of a band shall be linked to the first available not-defective sector of the alternative area of the same band. If there are no spare sectors left in the alternative area of this band, the defective sector shall be linked to the first available non-defective sector in the alternative area of the overflow bands. The link information shall be recorded in the map area of the band in which the replacement sector is located (see 18.2.5.6). This process is the same as that used for replacement of sectors found defective during the write or verify process.

18.2.5.3 Write procedure

Data shall be written in the sectors of a primary area. Prior to each write operation, the defect maps shall be checked to insure that the sector(s) involved have not been retired due to a previous write, verify or certify operation. Any previously retired sector shall be written in the alternative sector to which the map points. If the replacement sector is found in turn to be defective, it shall be rewritten in the first available alternative sector, and the map shall be updated accordingly. An alternative sector is available for a rewrite if the map of the band does not point to it. If there are no spare sectors left in the alternative area of a band, the defective sector shall be rewritten in the first available sector of the alternative area of the overflow bands.

A sector in a primary area found defective during the write or verify process shall be retired. It shall be rewritten in the first available spare sector of the alternative area of the band containing the primary area. If this replacement sector is found to be defective, the sector shall be rewritten in the next available spare sector. If there are no spare sectors left in the alternative area of this band, the defective sector shall be rewritten in the first available sector of the alternative areas of the overflow bands. The addresses of the defective sector and the replacement sector shall be recorded in the map area of the band in which the replacement sector has been recorded.

As an option, one can record pointers with the link information in the sectors (see 18.2.5.7).

18.2.5.4 Layout of the User Zone

The User Zone shall contain up to 63 bands, each of which shall consist of

- a primary area of 0 or more tracks;
- an alternative area of four tracks the sectors of which are numbered sequentially from 0 to 127;
- a map area of four tracks.

A band with no tracks of primary area is called an overflow band. These areas need not be consecutive, neither need the areas of a band be grouped together. The length and the location of the areas shall be recorded in the Defect Management Track (DMT). Each area shall start on sector 0 of the first track and end on sector 31 of the last track. The length of each alternative area restricts the number of rewrites in this area to 128.

Copyright International Organization for Standardization
Provided by IHS under license with ISO
No reproduction or networking permitted without license from IHS
Not for Resale

18.2.5.5 Defect Management Track (DMT)

The DMT shall define the location of the areas of each band in the User Zone. It shall be recorded on track -2 and optionally duplicated on track 20 001. The user data bytes of all sectors of the DMT shall be identical. They shall be recorded either during mastering or by the drive when initializing the disk. The content of each DMT sector shall be

Byte 0 : defect management mode, set to (00)

Byte 1 : a number n between 0 and 11 giving the number of user data bytes in a sector as $512 + n$

Byte 2 : a number m between 1 and 63 giving the number of bands in the User Zone

Bytes [3 + 8 (i - 1)] and [4 + 8 (i - 1)] : MSB followed by LSB of the track number of the first track of the map area of band i

Bytes [5 + 8 (i - 1)] and [6 + 8 (i - 1)] : MSB followed by LSB of the track number of the first track of the alternative area of band i

Bytes [7 + 8 (i - 1)] and [8 + 8 (i - 1)] : MSB followed by LSB of the track number of the first track of the primary area of band i. They shall be set to (FF) for an overflow band.

Bytes [9 + 8 (i - 1)] and [10 + 8 (i - 1)] : number of tracks in primary area of band i. They shall be set to (FF) for an overflow band.

In the above formula for the byte numbers, i is an integer such that

$$1 \leq i \leq m \leq 63$$

Unused bytes shall be set to (FF). If there is embossed data in the User Zone (track 0 to 19 999), the location of the bands shall be given by the manufacturer. In this case, the DMT shall be embossed. Tables 10 and 11 show an example of a DMT sector and the corresponding layout of the disk.

18.2.5.6 Map Area

The map area shall contain maps with a length of one sector each. The map of a band shall contain information that links replacement sectors in the alternative area of this band to defective sectors in a primary area. The last written sector of a map area always contains all link information of the band. A map can contain up to 128 map fields of 4 bytes each, where each map field contains one link. The map fields are sorted in ascending order of the address of the primary area sector.

The map area shall be written as a sequential file of sectors, starting at the first sector of the area, or as one sector which is continually overwritten by the newest map. A defective sector in the map area shall be rewritten in the next available sector.

The format of a map sector shall be as follows:

Bytes

0 to 3	: map field 1
$4(j\text{-}1)$ to $(4j\text{-}1)$	: map field j, $2 \leq j \leq 127$
508 to 511	: map field 128
512 to 522	: DMP field, set according to byte 523
523	: DMP identifier, set according to 18.2.5.7

Copyright International Organization for Standardization
Provided by IHS under license with ISO
No reproduction or networking permitted without license from IHS
Not for Resale

The format of a map field shall be as follows:

Bytes

0 to 2 : Sector address of the defective sector in the primary area (MSB, LSB of the track number, sector number).

3 : The sequence number of the replacement sector in the alternative area from 0 to 127.

Unused map fields shall be set to (FF).

18.2.5.7 Defective Management Pointers (DMP)

The defect management scheme allows the optional use of pointers to link defective sectors and replacement sectors. These DMPs can be recorded in bytes 512 to 522 of the data field of each sector. Bytes 512 to 522 can contain user data or DMPs or a combination of both. Byte 1 of the DMT sectors defines the contents of the field by giving the number of bytes in a sector that are used for user data and, by inference, the number of bytes that are reserved for DMPs. If more than 512 bytes of user data are recorded, the additional bytes shall be recorded immediately after byte 511. All user data bytes shall be transferred from, or to, the host. Unused DMP bytes shall be set to (FF).

Byte 523 shall contain a DMP Identifier, indicating the meaning of the DMP bytes. Each meaning is indicated by two values, one for even and one for odd tracks. The different values allow for the detection of empty sectors with ECC; crosstalk from an adjacent track is identified as invalid data since it has the wrong identifier value.

The four assigned meanings of byte 523 are as follows:

(00) even tracks, (01) odd tracks

These values shall only be used in the primary areas, where they indicate that the DMP field of the sectors contain a forward pointer. Bytes 520 to 522 shall contain the address (MSB, LSB of the track number, sector number) of the sector in the alternative area where rewrites of defective sectors in the primary area shall begin. This points initially to the first sector of the alternative area in this band. As alternative sectors are used for rewrites, this pointer can be updated to indicate the next available sector in the alternative area.

(02) even tracks, (03) odd tracks

These values shall only be used in the alternative areas, where they indicate a backward pointer. Bytes 520 to 522 shall contain the address (MSB, LSB of the track number, sector number) of the sector in the primary area of which this sector is a replacement.

(04) even tracks, (05) odd tracks

These values can be used in the primary, alternative and map areas, where they shall indicate a self-address and a logical block address (LBA). Bytes 517 to 519 shall contain the address (MSB, LSB of the track number, sector number) corresponding to the header address of this sector. Bytes 520 to 522 shall contain the LBA (LBA (MSB), LBA, LBA (LSB)) of the primary area sector in both the primary and alternative areas and shall contain (FF) in the map areas.

The LBA is the absolute sector number, starting with 0, assigned consecutively on each side of the disk to each sector in the primary areas.

(FE) even tracks, (FF) odd tracks

These values shall specify that DMPs are not used.

Copyright International Organization for Standardization
Provided by IHS under license with ISO
No reproduction or networking permitted without license from IHS
Not for Resale

Table 10 - Example of a sector in the defect management track (DMT)

Byte No.	Value	DMT entry (user data size = 520)
0	0	
1	8	
2	5	
3 and 4	9 988	1
5 and 6	4 990	
7 and 8	0	
9 and 10	4 990	
11 and 12	9 992	2
13 and 14	9 984	
15 and 16	4 994	
17 and 18	4 990	
19 and 20	9 996	3
21 and 22	15 002	
23 and 24	10 012	
25 and 26	4 990	
27 and 28	10 000	4
29 and 30	19 996	
31 and 32	15 006	
33 and 34	4 990	
35 and 36	10 004	5
37 and 38	10 008	
39 and 40	(FF)	
41 and 42	(FF)	
43 to 506	(FF)	6 to 63
507 to 522	(FF)	
523	(FF)	(track 20001)
	(FE)	(track -2)

Copyright International Organization for Standardization
Provided by IHS under license with ISO
No reproduction or networking permitted without license from IHS
Not for Resale

Table 11 - Logical disk format corresponding to the DMT sector of table 10

Track number	Band	Area description
-2	-	Defect management track
0 4989	No 1	Primary area
4990 4993	No 1	Alternative area
4994 9983	No 2	Primary area
9984 9987	No 2	Alternative area
9988 9991	No 1	Map area
9992 9995	No 2	Map area
9996 9999	No 3	Map area
10000 10003	No 4	Map area
10004 10007	No 5	Map area (overflow)
10008 10011	No 5	Alternative area (overflow)
10012 15001	No 3	Primary area
15002 15005	No 3	Alternative area
15006 19995	No 4	Primary area
19996 19999	No 4	Alternative area
20001	-	Defect management track

Copyright International Organization for Standardization
Provided by IHS under license with ISO
No reproduction or networking permitted without license from IHS
Not for Resale

Annex A
(normative)

Optical system for measuring write, read and erase characteristics

Figure A.1 shows the basic set-up of the optical system. Different components and locations of components are permitted, as long as the required performance is not changed. The optical system shall be such that the detected light reflected from the entrance surface is minimized so as not to influence the accuracy of measurement. The splitter D for the tracking servo signals depends on the system and can be located anywhere along the beam.

The linearly polarized beam entering beamsplitter E shall have an extinction ratio of less than 0,01.

The extinction ratio of an optical beam is defined as the ratio of the minimum power over the maximum power observed behind a linear polarizer in the beam which is rotated over at least 180°.

In the absence of polarization changes in the disk, the polarizing beamsplitter J shall be aligned to make the signal of K_1 equal to that of K_2. The direction of polarization in this case is called the neutral direction. The phase retarder I shall be adjusted such that the optical system between F and J does not show more than 2,5° phase retardation between the neutral polarization and the polarization perpendicular to it. This position of the retarder is called the neutral position.

The phase retarder can be used for the measurement of 15.3.4.

The intensity reflectance R_p of the beamsplitter E from F to H for the neutral polarization direction shall be nominally 0,30. The reflectance R_s for the polarization perpendicular to the neutral direction shall be nominally 0,95. The actual value of R_s shall not be smaller than 0,90.

If the imbalance of the magneto-optical signal is measured on a test drive with reflectances R_p' and R_s' for beamsplitter E, then the measured imbalance shall be multiplied by

$$\sqrt{\frac{R_s R_p'}{R_p R_s'}}$$

to make it correspond to the nominal beamsplitter E.

Channel 1 is the sum of the photodiode signals, and is used for reading prerecorded marks. Channel 2 is the difference of the photodiode signals, and is used for reading user-written marks with the magneto-optical effect of Kerr rotation.

Copyright International Organization for Standardization
Provided by IHS under license with ISO
No reproduction or networking permitted without license from IHS
Not for Resale

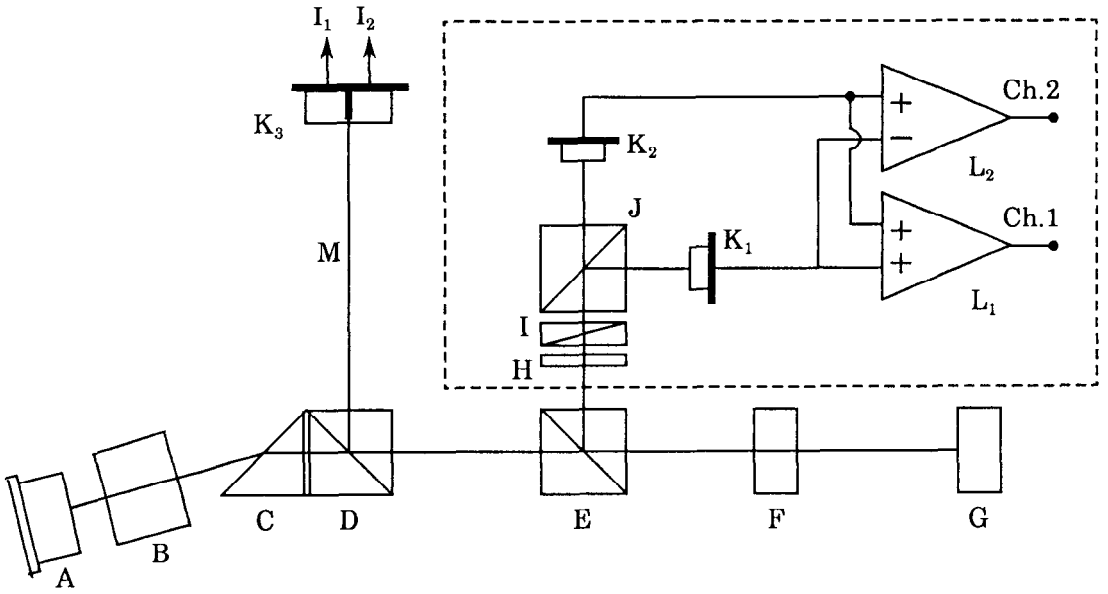

A	laser diode	H	optional half-wave plate
B	collimator lens	I	phase retarder
C	optional shaping prism	J	polarizing beamsplitter (PBS, p-s ratio larger than 100)
D	beam splitter	K_1,K_2	photodiode for channels 1 and 2
E	polarizing beam splitter	K_3	split photodiode
F	objective lens	L_1,L_2	DC-coupled amplifier
G	optical disk	M	tracking channel

Figure A.1 - Measuring set-up for write, read and erase characteristics

Copyright International Organization for Standardization
Provided by IHS under license with ISO
No reproduction or networking permitted without license from IHS
Not for Resale

Annex B
(normative)

Definition of write and erase pulse width

The rise and fall times, T_r and T_f, shall each be less than 10 ns, when the write pulse width T_p exceeds 50 ns. When T_p is less than 50 ns, T_r and T_f shall each be less than (0,2 T_p) ns.

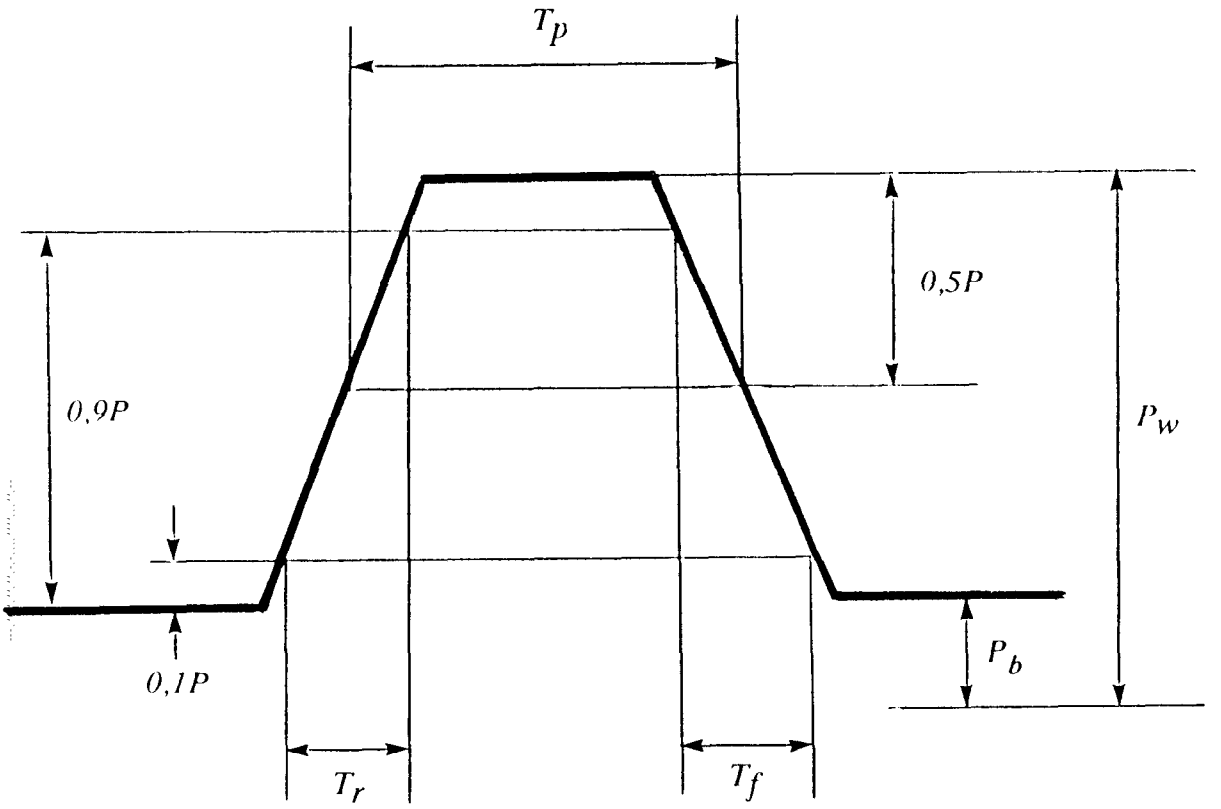

P_w : write power
P_b : bias power
T_r : rise time
T_f : fall time
T_p : write pulse width
P : P_w - P_b

Figure B.1 - Definition of the pulse shape

Copyright International Organization for Standardization
Provided by IHS under license with ISO
No reproduction or networking permitted without license from IHS
Not for Resale

Annex C
(normative)

Measurement of figure of merit

C.1 The figure of merit is, in practice, equal to the amplitude of the read signal from a recording at low frequency (in two dimensions). The written domains shall be substantially larger than the focal spot, so as to work in the low frequency region where the modulation transfer function of the optical system is one.

This implies that for a preformatted disk, rotating at 30 Hz, a signal with a frequency between 10 kHz and 100 kHz has to be written on several consecutive tracks and in between those tracks maintaining a fixed phase relationship between successive write passes. The disk shall be read with the read power specified in byte 21 of the SFP Zone (see 16.5.2).

Determination of the figure of merit using an optical system as shown in annex A and with characteristics as specified in 15.1.1 will not measure media properties only but also the optical retardation of the optical system. Therefore a calibration of the optical system is needed with a conventional determination of the figure of merit by measuring the reflectance, Kerr rotation and ellipticity. This calibration can only be executed reliably on media with low coercivity.

C.2. The optical test head shall be calibrated as follows. A test disk with negligible birefringence (glass) and low coercivity magneto-optical layer is used for conventional determination of reflectance R, Kerr rotation θ and ellipticity β. The product $F_L = R.\sin\theta \cdot \cos 2\beta$ is determined. On the same disk a test pattern as described above is written and read back with the optical head resulting in signal amplitude V_L. Any other disk (high or low coercivity) can now be measured with the optical head using a similar test pattern, resulting in a signal amplitude V. The figure of merit F_m of this disk is

$$F_m = F_L \times V / V_L$$

Copyright International Organization for Standardization
Provided by IHS under license with ISO
No reproduction or networking permitted without license from IHS
Not for Resale

Annex D
(informative)

Values to be implemented in future standards

This International Standard specifies one value only for bytes which identify optical disk cartridges which conform to this International Standard. It is expected that further types of optical disk cartridges will be developed in future. It is therefore recommended that the following values be used for these other cartridges.

D.1 Byte 0 of the Control Track PEP Zone

Setting of bits 6 to 4:

001 should mean Constant Linear Velocity (CLV)
010 should mean Modified Constant Angular Velocity (MCAV)
011 should mean Modified Constant Linear Velocity (MCLV)

D.2 Byte 7 of the Control Track PEP Zone

The following bit pattern should have the indicated meaning:

0000 0000 Read-only ODCs (ROM)
0001 0000 Write-once ODCs
0011 0000 Rewritable ODCs of the type phase change
1001 0000 Partial ROM of Write-once ODCs
1010 0000 Partial ROM of MO
1011 0000 Partial ROM of phase change.

Note that when the most significant bit is set to ONE, this indicates a partial ROM.

D.3 Bytes 35 to 47 of the SFP Zone

These bytes (and the corresponding bytes between byte 50 to byte 359) express erase power and erase pulse width under different conditions.

D.4 Bytes 360 to 383 of the SFP Zone

These bytes should be used to express magnetic field parameters.

D.5 Bytes 386 to 389 of the SFP Zone

These bytes should be used for the specification of speed stepping parameters for the MCAV recording mode.

Byte 386 should be used for the most significant byte of the number of tracks per band.
Byte 387 should be used for the least significant byte of the number of tracks per band.
Byte 388 should be used for the number of clock steps per band.
Byte 389 should be used for the number of added sectors per band.

D.6 Bytes 390 to 393 of the SFP Zone

These bytes should be used for variable track pitch information.

D.7 Bytes 472 to 479 of the SFP Zone

These bytes should be used to specify a write strategy.

Copyright International Organization for Standardization
Provided by IHS under license with ISO
No reproduction or networking permitted without license from IHS
Not for Resale

Annex E
(normative)

Pointer fields

The pointers are provided for compatibility with optical disk cartridges recorded once and read several times (WORM). The control information within the data field consist of 12 bytes denoted by Pxy in figures G.1 and G.2 of annex G. Pointers can be used for bad block mapping and error recovery. There are two basic formats for three pointers, one for user sectors, the other for back-up sectors.

User sectors	**Back-up sectors**
P1 = Self address (physical)	P1 = Self address (physical)
P2 = Possible forward pointer	P2 = Backward pointer
P3 = Possible forward pointer	P3 = Backward pointer

Pointers have the form of TTSR , where TT is track number, MSB and LSB, S is the sector number, and R is set to (FF) as follows.

1st byte	2nd byte	3rd byte	4th byte
MSB of track number	LSB of track number	Sector number	(FF)

Figure E.1 - Format of a DM pointer

The pointers follow the user data and are protected by ECC and CRC.

Forward pointers, P2 and P3, can take the possible predictive values determined before alternation. Backward pointers, P2 and P3, should indicate definitive values.

Copyright International Organization for Standardization
Provided by IHS under license with ISO
No reproduction or networking permitted without license from IHS
Not for Resale

Annex F
(normative)

CRC for ID fields

The sixteen bits of the CRC shall be computed over the first three bytes of the ID field. The generator polynomial shall be

$$G(x) = x^{16} + x^{12} + x^5 + 1$$

The residual polynomial shall be

$$R(x) = \left(\sum_{i=8}^{i=23} \overline{a}_i x^i + \sum_{i=0}^{i=7} a_i x^i \right) x^{16} \mod G(x)$$

where a_i denotes a bit of the first three bytes and $\overline{a_i}$ an inverted bit. The highest order bit of the first byte is a_{23}.

The sixteen bits C_k of the CRC are defined by

$$R_c(x) = \sum_{k=0}^{k=15} c_k x^k$$

where c_{15} is recorded as the highest order bit of the fourth byte in the ID field.

Copyright International Organization for Standardization
Provided by IHS under license with ISO
No reproduction or networking permitted without license from IHS
Not for Resale

Annex G
(normative)

Interleave, CRC, ECC, Resync for the Data field

G.1 Interleave

G.1.1 Interleave for 1 024-byte sectors

The different bytes shall be designated as follows.

D_n are user data bytes
$P_{h,m}$ are DMP bytes
C_k are CRC check bytes
$E_{s,t}$ are ECC check bytes

These bytes shall be ordered in a sequence A_n in the order in which they shall be recorded on the disk. This order is the same as that in which they are input into the controller. Depending on the value of n, these elements are

for $1 \le n \le 1\,024$: $A_n = D_n$

for $1\,025 \le n \le 1\,036$: $A_n = P_{h,m}$

for $1\,037 \le n \le 1\,040$: $A_n = C_k$

for $1\,041 \le n \le 1\,200$: $A_n = E_{s,t}$

where:

$$h = int\left[\frac{n - 1\,025}{4}\right] + 1$$

$$m = [\,(n - 1\,025) \bmod 4\,] + 1$$

$$k = n - 1\,036$$

$$s = [\,(n - 1\,041) \bmod 10\,] + 1$$

$$t = int\left[\frac{n - 1\,041}{10}\right] + 1$$

The notation *int* denotes the largest integer not greater than x.

The first three parts of A_n are 10-way interleaved by mapping them onto a two-dimensional matrix B_{ij} with 104 rows and 10 columns. Thus

for $1 \le n \le 1\,040$: $B_{ij} = A_n$

Copyright International Organization for Standardization
Provided by IHS under license with ISO
No reproduction or networking permitted without license from IHS
Not for Resale

where:

$$i = 103 - int\left[\frac{n-1}{10}\right]$$

$$j = (n-1) \bmod 10$$

G.1.2 Interleave for 512-byte sectors

For 512-byte sectors the sequence of bytes shall be denoted by A'_n, the other notations shall be as specified in G.1.1. In addition the two (FF) bytes are shown as (FF).

for $1 \le n \le 512$: $A'_n = D_n$

for $513 \le n \le 524$: $A'_n = P_{h,m}$

for $525 \le n \le 526$: $A'_n = (FF)$

for $527 \le n \le 530$: $A'_n = C_K$

for $531 \le n \le 610$: $A'_n = E_{s,t}$

where:

$$h = int\left[\frac{n-513}{4}\right] + 1$$

$$m = [(n-513) \bmod 4] + 1$$

$$k = n - 526$$

$$s = [(n-531) \bmod 5] + 1$$

$$t = int\left[\frac{n-531}{5}\right] + 1$$

The first four parts of A'_n are 5-way interleaved by mapping them onto a two-dimensional matrix B'_{ij} with 106 rows and 5 columns. Thus:

for $1 \le n \le 530$: $B'_{ij} = A'_n$

where:

$$i = 105 - int\left[\frac{n-1}{5}\right]$$

$$j = (n-1) \bmod 5$$

G.2 CRC

G.2.1 General

The CRC and the ECC shall be computed over the Galois field based on the primitive polynomial

$$G_p(x) = x^8 + x^5 + x^3 + x^2 + 1$$

Copyright International Organization for Standardization
Provided by IHS under license with ISO
No reproduction or networking permitted without license from IHS
Not for Resale

The generator polynomial for the CRC bytes shall be

$$G_C(x) = \prod_{i=136}^{i=139} (x + \alpha^i)$$

where the element $\alpha^i = (\beta^i)^{88}$, with β being a primitive root of $G_p(x)$. The value of the n-th bit in a byte is the coefficient of the n-th power of β, where $0 \leq n \leq 7$, when β is expressed on a polynomial basis.

G.2.2 CRC for 1 024-byte sectors

The four check bytes of the CRC shall be computed over the user data and the DMP bytes.

The information polynomial shall be

$$I_C(x) = \left[\sum_{i=1}^{i=103} \left(\sum_{j=0}^{j=9} (B_{i,j})\, x^i \right)\right] + \sum_{j=0}^{j=5} (B_{0,j})\, x^0$$

The contents of the four check bytes C_k of the CRC are defined by the residual polynomial

$$R_C(x) = I_C(x)\, x^4 \quad \text{mod } G_C(x)$$

$$R_C(x) = \sum_{k=1}^{k=4} C_k\, x^{4-k}$$

The last equation specifies the storage locations for the coefficients of the polynomial.

G.2.3 CRC for 512-byte sectors

The four check bytes of the CRC shall be computed over the user data, the DMP bytes and the two (FF) bytes. The information polynomial shall be

$$I'_C(x) = \left[\sum_{i=1}^{i=105} \left(\sum_{j=0}^{j=4} (B'_{i,j})\, x^i \right)\right] + (B'_{0,0})\, x^0$$

The contents of the four CRC check bytes shall be calculated as specified in G.2.2, however using polynomial $I'_C(x)$.

Copyright International Organization for Standardization
Provided by IHS under license with ISO
No reproduction or networking permitted without license from IHS
Not for Resale

G.3 ECC

The primitive polynomial $G_p(x)$ and the elements α^i and β shall be as specified in G.2.1. The generator polynomial for the check bytes of the ECC shall be

$$G_E(x) = \prod_{i=120}^{i=135} (x + \alpha^i)$$

This polynomial is self-reciprocal. This property can be used to reduce the hardware size. The initial setting of the ECC register shall be all ZEROs. The bits of the computed check bytes shall be inverted before they are encoded into Channel bits.

G.3.1 ECC for 1 024-byte sectors

The 160 check bytes of the ECC shall be computed over the user bytes, the DMP bytes and the CRC bytes. The corresponding 10 information polynomials shall be:

$$I_{Ej}(x) = \sum_{i=0}^{i=103} (B_{i,j})\, x^i$$

where $0 \le j \le 9$.

The contents of the 16 check bytes $E_{s,t}$ for each polynomial $I_{Ej}(x)$ are defined by the residual polynomial

$$R_{E_j}(x) = I_{E_j}(x)\, x^{16} \mod G_E(x)$$

$$R_{E_j}(x) = \sum_{t=1}^{t=16} E_{j+1,t}\, x^{16-t}$$

The last equation specifies the storage locations for the coefficients of the polynomials.

G.3.2 ECC for 512-byte sectors

The 80 check bytes of the ECC shall be computed over the user data bytes, the DMP bytes, the two (FF) bytes and the CRC bytes. The corresponding 5 information polynomials shall be

$$I'_{Ej}(x) = \sum_{i=0}^{i=105} (B'_{i,j})\, x^i$$

where $0 \le j \le 4$.

Copyright International Organization for Standardization
Provided by IHS under license with ISO
No reproduction or networking permitted without license from IHS
Not for Resale

The calculation of the 16 check bytes for each of the information polynomials $I_{Ej}(x)$ shall be carried out as specified in G.3.1.

G.4 Resync

The Resync fields shall be inserted in the Data field to prevent loss of synchronization and to limit the propagation of errors in the user data. Whilst they are numbered consecutively all Resync fields are identical; they contain the following pattern of Channel bits

0010 0000 0010 0100

For 1 024-byte sectors, a field RSn shall be inserted between bytes A_{20n} and A_{20n+1}, where $1 \leq n \leq 59$.

For 512-byte sectors, a field RSn shall be inserted between bytes A_{15n} and A_{15n+1}, where $1 \leq n \leq 40$.

G.5 Recording sequence for the Data field

The elements of the Data field shall be recorded on the disk according to sequence A_n or A'_n, as applicable, immediately following the Sync bytes and with the Resync bytes inserted as specified in G.4.

Figures G.1 and G.2 show in matrix form the arrangement of these elements. The sequence of recording is from left-to-right and top-to-bottom.

SB designates a Sync byte
D designates a user byte
RS designates a Resync byte
P designates a DMP byte
C designates a check byte for CRC
E designates a check byte for ECC
(FF) designates a (FF) byte

For 1 024-byte sectors (figure G.1) the first 104 rows contain in columns 0 to 9 the user bytes, the DMP bytes and the CRC check bytes. The next 16 rows contain only the ECC check bytes.

For 512-byte sectors (figure G.2) the first 106 rows contain in columns 0 to 4 the user bytes, the DMP bytes, the two (FF) bytes and the CRC check bytes. The next 16 rows contain only the ECC check bytes.

Copyright International Organization for Standardization
Provided by IHS under license with ISO
No reproduction or networking permitted without license from IHS
Not for Resale

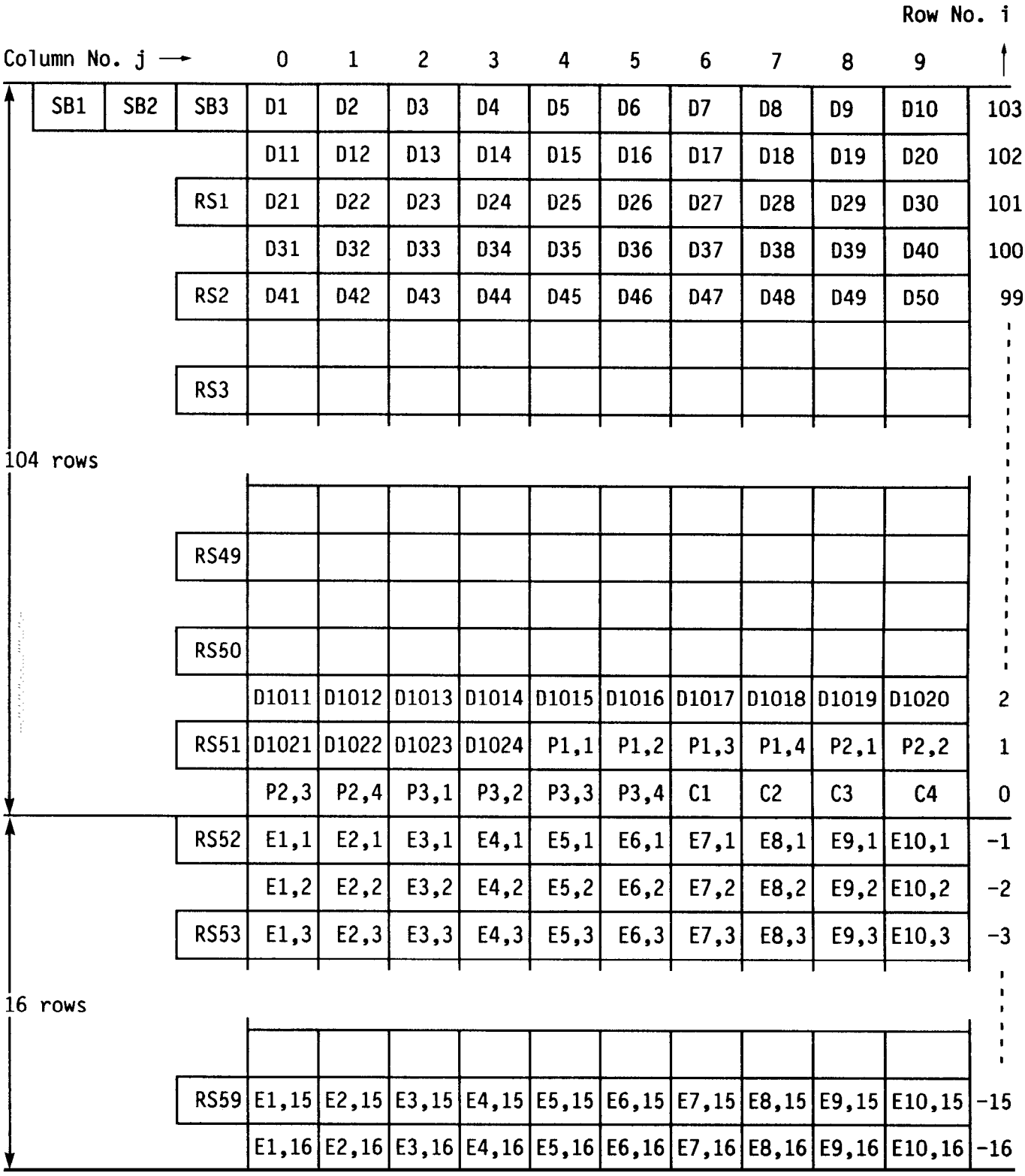

Figure G.1 - Data field configuration, 1 024-byte sectors, ECC with 10-way interleave

Copyright International Organization for Standardization
Provided by IHS under license with ISO
No reproduction or networking permitted without license from IHS
Not for Resale

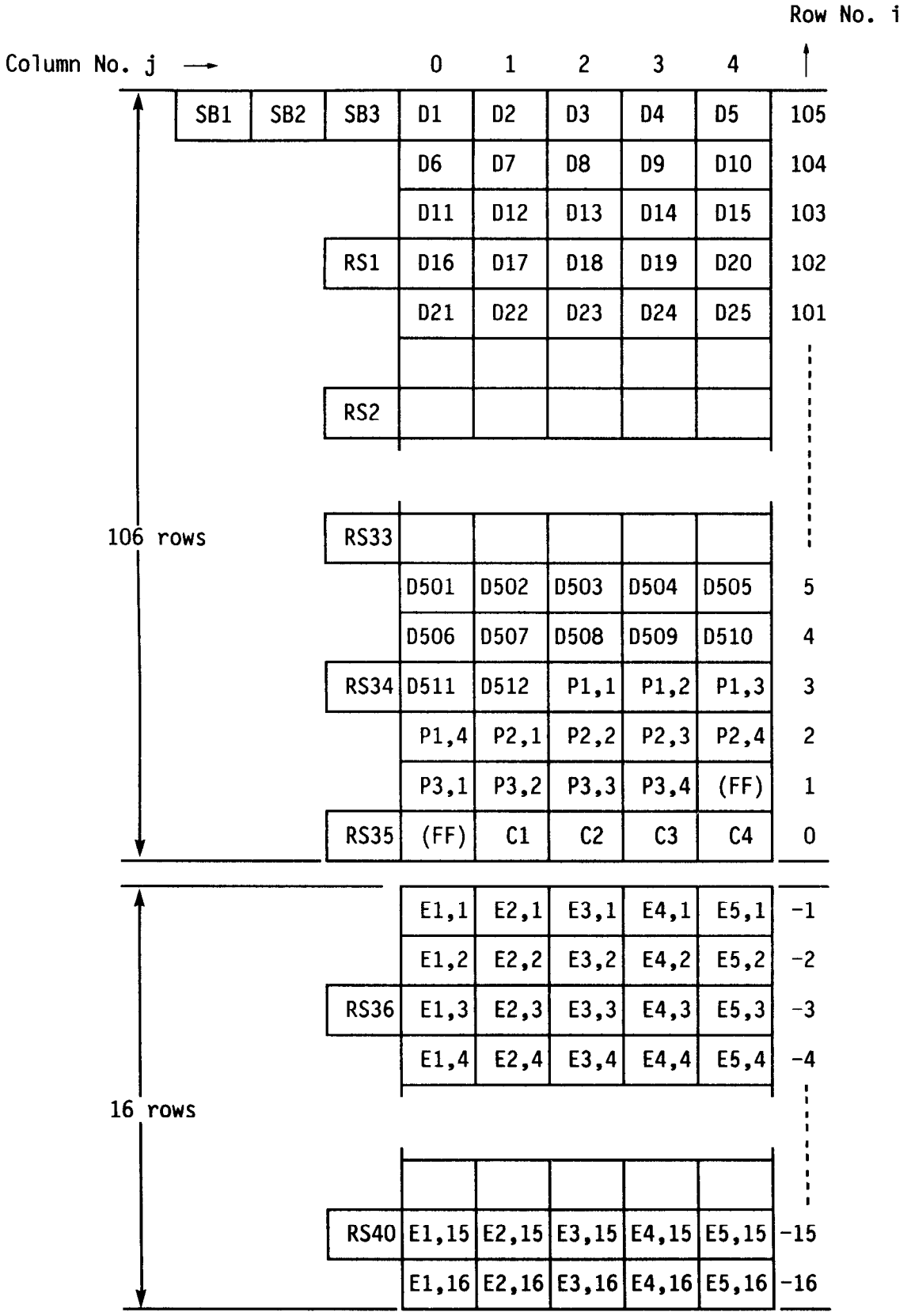

Figure G.2 - Data field configuration, 512-byte sectors, ECC with 5-way interleave

Copyright International Organization for Standardization
Provided by IHS under license with ISO
No reproduction or networking permitted without license from IHS
Not for Resale

Annex H
(informative)

Sector retirement guidelines

This International Standard assumes that up to 2 048 sectors may be replaced in any of the following cases:

a) A sector does not have at least two reliable Headers.

b) The Sector Mark is not readable.

c) A single defect of more than 30 bytes on a 1 024-byte per sectors is detected (15 bytes on a 512-byte sector).

d) The total number of defective bytes exceeds 40 bytes in 1 024-byte sectors (15 bytes in a 512-byte sector), or 5 bytes in one ECC interleave of a 1 024-byte sector, (3 bytes in a 512-byte sector).

Annex I
(informative)

Office environment

Due to their construction and mode of operation, optical disk cartridges have considerable resistance to the effects of dust particles around and inside the disk drive. Consequently it is not generally necessary to take special precautions to maintain a sufficiently low concentration of dust particles.

Operation in heavy concentrations of dust should be avoided, e.g. in a machine shop or on a building site.

Office environment implies an environment in which personnel may spend a full working day without protection and without suffering temporary or permanent discomfort.

Copyright International Organization for Standardization
Provided by IHS under license with ISO
No reproduction or networking permitted without license from IHS
Not for Resale

Annex J
(informative)

Transportation

J.1 As transportation occurs under a wide range of temperature and humidity variations, for differing periods, by many methods of transport and in all parts of the world it is not possible to specify conditions for transportation or for packaging.

J.2 The form of packaging should be agreed between sender and recipient or, in the absence of such agreement, is the responsibility of the sender. It should take account of the following hazards.

J.2.1 Temperature and humidity

Insulation and wrapping should be designed to maintain the conditions for storage over the estimated period of transportation.

J.2.2 Impact loads and vibration

a) avoid mechanical loads that would distort the shape of the cartridge;

b) avoid dropping the cartridge;

c) cartridges should be packed in a rigid box containing adequate shock absorbent material;

d) the final box should have a clean interior and a construction that provides sealing to prevent the ingress of dirt and moisture.

Copyright International Organization for Standardization
Provided by IHS under license with ISO
No reproduction or networking permitted without license from IHS
Not for Resale

Annex K

(normative)

Requirements for interchange

K.1 Equipment for writing

The disk under test shall have been written with arbitrary data by a disk drive for data interchange use in the operating environment.

K.2 Test equipment for reading

K.2.1 General

The read test shall be performed on a test drive in the test environment. The rotational frequency of the disk when reading shall be 30,0 Hz ± 0,3 Hz.

The direction of rotation shall be counter-clockwise when viewed from the objective lens.

K.2.2 Read channel

K.2.2.1 Characteristics of the optical beam

The optical beam used for reading shall comply with the requirements of 15.1.1 b), c), d), e) and g). Two polarizations of the optical beam shall be used:

- with the polarization linear and parallel to the tracks,
- with the polarization linear and perpendicular to the tracks.

K.2.2.2 Read power

The read power shall comply with the requirements of 15.1.2 a), b) and c).

K.2.2.3 Optics

The optical head used for reading shall comply with the requirements of annex A.

K.2.2.4 Read amplifier

The read amplifier after the photo detector in both channel 1 and 2 shall have a flat response from 100 kHz to 14,8 MHz within ± 1 dB.

K.2.2.5 Analog to binary conversion

The signals from the read amplifier shall be converted from analog to binary. The converter for channel 1 shall work properly for signals from pre-recorded marks with properties as defined in 17.1.2.2 for Format A, and in 18.1.2.2 and 18.1.2.3 for Format B.

The converter for channel 2 shall work properly for signals from user-written marks with properties as defined in 15.3.

K.2.2.6 Binary-to-digital conversion

The binary signal shall be converted to a digital signal according to the rules of the recording code.

K.2.3 Tracking

The open-loop transfer function for the axial and radial tracking servo shall be

Copyright International Organization for Standardization
Provided by IHS under license with ISO
No reproduction or networking permitted without license from IHS
Not for Resale

$$H = \frac{(2\pi f_0)^2}{c\,s^2} \left(\frac{1 + \frac{s\,c}{2\pi f_0}}{1 + \frac{s}{2\pi f_0 c}} \right)$$

where $s = i2\pi f$, within such an accuracy that $|1+H|$ does not deviate more than ± 20% from its nominal value in a bandwidth from 30 Hz to 10 kHz.

The constant c shall be 3. The open-loop 0 dB frequency f_0 shall be 1 250 Hz for the axial servo and 1 740 Hz for the radial servo. The open-loop DC gain of the axial servo shall be at least 80 dB.

K.3 Requirements for the digital read signals

A byte error is defined by a byte in which one or more bits have a wrong setting, as detected by the error detection and correction circuit.

K.3.1 Any sector accepted as valid during the writing process shall not contain byte errors in channel 2 after the error correction circuit.

K.3.2 Any sector not accepted as valid during the writing process shall have been rewritten according to the rules for defect management.

NOTE The rewrite criterion for a sector in Format A is given in annex H for the signals in Channel 1 and Channel 2. The criterion for Format B is not specified in this International Standard. The rewrite percentage, which reflects the quality of the disk, is limited by 17.4.2 for Format A, to a user shall be a matter of agreement between purchaser and supplier.

K.4 Requirements for the digital servo signals

The focus of the optical beam shall not jump tracks voluntarily.

K.5 Requirement for interchange

An interchanged optical disk cartridge meets the requirements for interchangeability if it meets the requirements of K.3 and K.4 when it is written on an interchange drive according to K.1 and read on a test drive according to K.2.

Copyright International Organization for Standardization
Provided by IHS under license with ISO
No reproduction or networking permitted without license from IHS
Not for Resale

UDC 681.327.28

Descriptors : data processing, information interchange, data storage devices, optical disks, optical disk cartridges, specifications.

Price based on 96 pages

--`,,```,,,,````-`-`,,`,,`,`,,`---

Copyright International Organization for Standardization
Provided by IHS under license with ISO
No reproduction or networking permitted without license from IHS

Not for Resale