INTERNATIONAL STANDARDIZED PROFILE

ISO/IEC ISP 10613-6

First edition
1995-04-01

Information technology — International Standardized Profile RA — Relaying the Connectionless-mode Network Service —

Part 6:
Definition of profile RA51.54, relaying the Connectionless-mode Network Service between CSMA/CD LAN subnetworks and FDDI LAN subnetworks

Technologies de l'information — Profil normalisé international RA — Relais de service de réseau en mode sans connexion —

Partie 6: Définition du profil RA51.54, relais de service de réseau en mode sans connexion entre sous-réseaux CSMA/CD LAN et sous-réseaux FDDI LAN

Reference number
ISO/IEC ISP 10613-6:1995(E)

Copyright International Organization for Standardization
Provided by IHS under license with ISO
No reproduction or networking permitted without license from IHS

Not for Resale

Contents

Page

Foreword ... iii

Introduction ... v

1 Scope ... 1
1.1 General ... 1
1.2 Position within the taxonomy ... 1
1.3 Scenario ... 1

2 Normative references ... 2

3 Definitions ... 3

4 Abbreviations ... 3

5 Requirements ... 3
5.1 Static conformance requirements ... 3
5.2 Dynamic conformance requirements ... 4

Annex A: ISPICS requirements list (normative) ... 5
A.1 General options of the profile ... 5
A.2 Base standards selected and combined in the profile ... 5
A.3 Constraints on base standards ... 5

© ISO/IEC 1995
All rights reserved. Unless otherwise specified, no part of this publication may be reproduced or utilized in any form or by any means, electronic or mechanical, including photocopying and microfilm, without permission in writing from the publisher.

ISO/IEC Copyright Office • Case postale 56 • CH-1211 Genève • Switzerland

Printed in Switzerland

Copyright International Organization for Standardization
Provided by IHS under license with ISO
No reproduction or networking permitted without license from IHS
Not for Resale

Foreword

ISO (the International Organization for Standardization) and IEC (the International Electrotechnical Commission) together form a system for worldwide standardization as a whole. National bodies that are members of ISO or IEC participate in the development of International Standards and Technical Reports through technical committees established by the respective organization to deal with particular fields of technical activity. ISO and IEC technical committees collaborate in fields of mutual interest. Other international organizations, governmental and non-governmental, in liaison with ISO and IEC, also take part in the work.

In the field of information technology, ISO and IEC have established a joint technical committee, ISO/IEC JTC 1. In addition to developing International Standards, ISO/IEC JTC 1 has created a Special Group on Functional Standardization for the processing of International Standardized Profiles.

An International Standardized Profile is an internationally agreed, harmonized document which identifies a standard or group of standards, together with options and parameters, necessary to accomplish a function or a set of functions.

Draft International Standardized Profiles are circulated to national bodies for voting. Publication as an International Standardized Profile requires approval by at least 75 % of the national bodies casting a vote.

S-liaison may be established with JTC 1/SGFS by specialized organizations involved in the work of functional standardization. This part of ISO/IEC ISP 10613 was prepared with the collaboration of the following S-liaisons:

- Asia-Oceania Workshop (AOW);
- European Workshop for Open Systems (EWOS);
- Open Systems Environment Implementors' Workshop (OIW).

ISO/IEC ISP 10613 consists of several parts, under the general title *Information technology - International Standardized Profile RA - Relaying the Connectionless-mode Network Service:*

- *Part 1: Subnetwork-independent requirements*
- *Part 2: LAN subnetwork-dependent, media-independent requirements*
- *Part 3: CSMA/CD LAN subnetwork-dependent, media-dependent requirements*
- *Part 4: FDDI LAN subnetwork-dependent, media-dependent requirements*
- *Part 5: Definition of profile RA51.51, relaying the Connectionless-mode Network Service between CSMA/CD LAN subnetworks*
- *Part 6: Definition of profile RA51.54, relaying the Connectionless-mode Network Service between CSMA/CD LAN subnetworks and FDDI LAN subnetworks*
- *Part 7: PSDN subnetwork-dependent, media-dependent requirements for virtual calls over a permanent access*
- *Part 8: Definition of profile RA51.1111, relaying the Connectionless-mode Network Service between CSMA/CD LAN subnetworks and PSDNs using virtual calls over a PSTN leased line permanent access*

Copyright International Organization for Standardization
Provided by IHS under license with ISO
No reproduction or networking permitted without license from IHS
Not for Resale

- *Part 9: Definition of profile RA51.1121, relaying the Connectionless-mode Network Service between CSMA/CD LAN subnetworks and PSDNs using virtual calls over a digital data circuit/CSDN leased line permanent access*

- *Part 10: Token Ring LAN subnetwork-dependent, media-dependent requirements*

- *Part 11: Definition of profile RA51.53, relaying the Connectionless-mode Network Service between CSMA/CD LAN subnetworks and Token Ring LAN subnetworks*

- *Part 12: Definition of profile RA53.53, relaying the Connectionless-mode Network Service between Token Ring LAN subnetworks*

- *Part 13: Definition of profile RA53.54, relaying the Connectionless-mode Network Service between Token Ring LAN subnetworks and FDDI LAN subnetworks*

- *Part 14: Definition of profile RA54.54, relaying the Connectionless-mode Network Service between FDDI LAN subnetworks*

- *Part 15: Definition of profile RA53.1111, relaying the Connectionless-mode Network Service between Token Ring LAN subnetworks and PSDNs using virtual calls over a PSTN leased line permanent access*

- *Part 16: Definition of profile RA53.1121, relaying the Connectionless-mode Network Service between Token Ring LAN subnetworks and PSDNs using virtual calls over a digital data circuit/CSDN leased line permanent access*

- *Part 17: Definition of profile RA54.1111, relaying the Connectionless-mode Network Service between FDDI LAN subnetworks and PSDNs using virtual calls over a PSTN leased line permanent access*

- *Part 18: Definition of profile RA54.1121, relaying the Connectionless-mode Network Service between FDDI LAN subnetworks and PSDNs using virtual calls over a digital data circuit/CSDN leased line permanent access*

Annex A forms an integral part of this part of ISO/IEC ISP 10613.

Copyright International Organization for Standardization
Provided by IHS under license with ISO
No reproduction or networking permitted without license from IHS Not for Resale

Introduction

This International Standardized Profile (ISP) is defined in accordance with the principles specified by ISO/IEC Technical Report 10000.

The context of Functional Standardization is one area in the overall field of Information Technology (IT) standardization activities, covering base standards, profiles, and registration mechanisms. A profile defines a combination of base standards that collectively perform a specific well-defined IT function. Profiles standardize the use of options and other variations in the base standards, and provide a basis for the development of uniform, internationally recognized system tests.

ISPs are produced not simply to 'legitimize' a particular choice of base standards and options, but to promote real system interoperability. One of the most important roles for an ISP is to serve as the basis for the development (by organizations other than ISO and IEC) of internationally recognized test methods. The development and widespread acceptance of tests based on this and other ISPs is crucial to the successful realization of this goal.

ISO/IEC ISP 10613 consists of several parts of which this is part 6. ISO/IEC ISP 10613-1 specifies the profile requirements that are subnetwork-independent. There are further parts which specify subnetwork-dependent and media-dependent requirements. In addition, for each individual profile there is a part of ISO/IEC ISP 10613 which identifies the specific requirements of that profile, making reference to appropriate material from part 1 and from the subnetwork-dependent parts of ISO/IEC ISP 10613. This part of ISO/IEC ISP 10613 is the one which identifies the specific requirements for profile RA51.54.

Copyright International Organization for Standardization
Provided by IHS under license with ISO
No reproduction or networking permitted without license from IHS
Not for Resale

This page is intentionally left blank

Copyright International Organization for Standardization
Provided by IHS under license with ISO
No reproduction or networking permitted without license from IHS Not for Resale

Information technology — International Standardized Profile RA — Relaying the Connectionless-mode Network Service —

Part 6:
Definition of profile RA51.54, relaying the Connectionless-mode Network Service between CSMA/CD LAN subnetworks and FDDI LAN subnetworks

1 Scope

1.1 General

This International Standardized Profile is applicable to interworking units concerned with operating in the Open Systems Interconnection (OSI) environment. It specifies a combination of OSI base standards that collectively provide a Network Relay function for the connectionless-mode Network Service.

This part of ISO/IEC ISP 10613 specifies the RA51.54 profile, which is applicable to interworking units operating between CSMA/CD LAN subnetworks and FDDI LAN subnetworks.

1.2 Position within the taxonomy

The taxonomy of profiles is defined in ISO/IEC TR 10000-2. This part of ISO/IEC ISP 10613 defines the profile:

RA51.54 Relaying the Connectionless-mode Network Service between CSMA/CD LAN subnetworks and FDDI LAN subnetworks.

1.3 Scenario

Figure 1 illustrates the configuration of systems to which the RA51.54 profile is applicable. The figure shows two reference points, but an implementation of this profile may include more attachments to CSMA/CD and FDDI LAN subnetworks, with a reference point at each.

Copyright International Organization for Standardization
Provided by IHS under license with ISO
No reproduction or networking permitted without license from IHS
Not for Resale

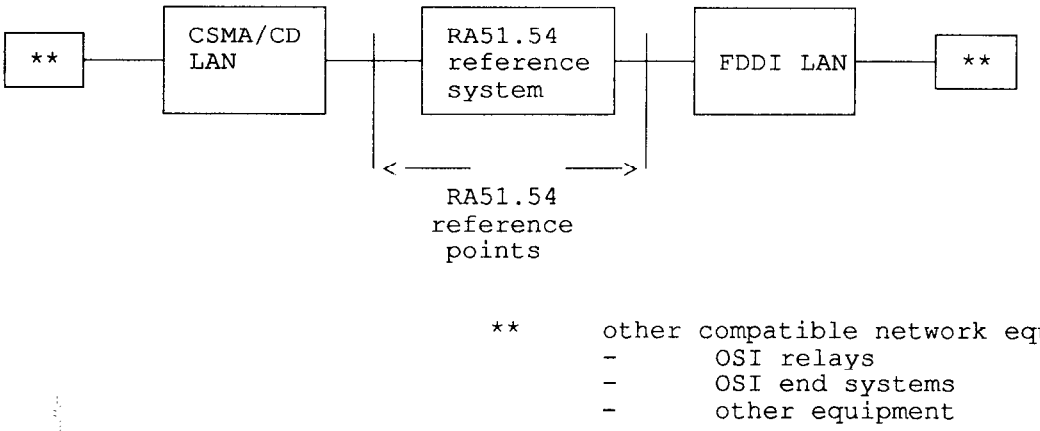

Figure 1 - Scenario of applicability of the RA51.54 profile

As this profile is a member of the RA group, it is intended that a conforming implementation is capable of interworking with other profiles of the RA group and with End Systems implementing profiles from the TA or UA groups, provided that suitable relays are in place in the case of those members of these groups which relate to different elements of the subnetwork taxonomy.

This part of ISO/IEC ISP 10613 specifies the required functions from the supporting protocol stack shown in figure 2.

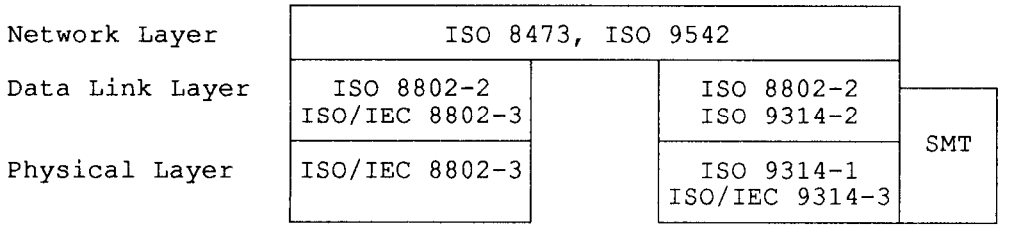

Figure 2 - Protocol stack for the RA51.54 profile

2 Normative references

The following documents contain provisions which, through reference in this text, constitute provisions of this part of ISO/IEC ISP 10613. At the time of publication, the editions indicated were valid. All documents are subject to revision, and parties to agreements based on this part of ISO/IEC ISP 10613 are warned against automatically applying any more recent editions of the documents listed below, since the nature of references made by ISPs to such documents is that they may be specific to a particular edition. Members of IEC and ISO maintain registers of currently valid International Standards and ISPs, and ITU-T maintains published editions of its current Recommendations.

ISO/IEC TR 10000-1:1992, *Information technology - Framework and taxonomy of International Standardized Profiles -Part 1: Framework.*

Copyright International Organization for Standardization
Provided by IHS under license with ISO
No reproduction or networking permitted without license from IHS Not for Resale

ISO/IEC TR 10000-2:1992, *Information technology - Framework and taxonomy of International Standardized Profiles - Part 2: Taxonomy of OSI Profiles.*

ISO/IEC ISP 10608-14: - [1], *Information technology - International Standardized Profile TAnnnn - Connection-mode Transport Service over connectionless-mode Network Service - Part 14: MAC, PHY and PMD sublayer dependent and Station Management requirements for an FDDI LAN subnetwork*

ISO/IEC ISP 10613-1:1994, *Information technology - International Standardized Profile RA - Relaying the Connectionless-mode Network Service - Part 1: Subnetwork-independent requirements.*

ISO/IEC ISP 10613-2:1994, *Information technology - International Standardized Profile RA - Relaying the Connectionless-mode Network Service - Part 2: LAN subnetwork-dependent, media-independent requirements.*

ISO/IEC ISP 10613-3:1994, *Information technology - International Standardized Profile RA - Relaying the Connectionless-mode Network Service - Part 3: CSMA/CD LAN subnetwork-dependent, media-dependentt requirements.*

ISO/IEC ISP 10613-4:1994, *Information technology - International Standardized Profile RA - Relaying the Connectionless-mode Network Service - Part 4: FDDI LAN subnetwork-dependent, media-dependent requirements.*

Additional normative references are found in each of the ISP parts listed above. These additional normative references are base standards used for development of the relevant ISP parts.

3 Definitions

All the terms used in this part of ISO/IEC ISP 10613 are defined in the documents that are referenced in clause 2.

4 Abbreviations

All abbreviations, including acronyms, are used in this part of ISO/IEC ISP 10613 as defined in the documents referenced in clause 2.

5 Requirements

5.1 Static conformance requirements

An implementation conforming to the profile defined in this part of ISO/IEC ISP 10613 shall:

a) support at least one point of attachment to an ISO/IEC 8802-3 CSMA/CD LAN subnetwork, through which it shall support all the features specified as static conformance requirements of parts 1, 2 and 3 of ISO/IEC ISP 10613;

1) To be published

Copyright International Organization for Standardization
Provided by IHS under license with ISO
No reproduction or networking permitted without license from IHS Not for Resale

b) support at least one point of attachment to an ISO/IEC 9314 FDDI LAN subnetwork, through which it shall support all the features specified as static conformance requirements of parts 1, 2 and 4 of ISO/IEC ISP 10613;

and shall implement all the features identified as requirements in the ISPICS requirements list in annex A.

5.2 Dynamic conformance requirements

An implementation conforming to the profile defined in this part of ISO/IEC ISP 10613 shall carry out the supported functions according to the applicable dynamic conformance requirements of parts 1, 2, 3 and 4 of ISO/IEC ISP 10613. It shall behave in accordance with the requirements of the ISPICS requirements list in annex A.

Copyright International Organization for Standardization
Provided by IHS under license with ISO
No reproduction or networking permitted without license from IHS Not for Resale

Annex A
(normative)

ISPICS requirements list

A.1 General options of the profile

There are no general options in this profile.

A.2 Base standards selected and combined in the profile

This profile makes use of the following base standards:

- ISO 8473
- ISO 9542
- ISO 8802-2
- ISO/IEC 8802-3
- ISO 9314-1
- ISO 9314-2
- ISO/IEC 9314-3

A.3 Constraints on base standards

A.3.1 General constraints

A conforming implementation of this profile shall:

a) meet all the subnetwork-type independent relaying constraints on operation of ISO 8473 and ISO 9542 which are specified in the ISPICS requirements list in ISO/IEC ISP 10613-1;

b) for operation of the attachments to CSMA/CD subnetworks meet all the constraints that are specified in the ISPICS requirements lists in ISO/IEC ISP 10613, parts 2 and 3;

c) for operation of the attachments to FDDI subnetworks, meet all the constraints that are specified in the ISPICS requirements lists in ISO/IEC ISP 10613, parts 2 and 4.

A.3.2 Additional constraints

A.3.2.1 Notation and conventions

The notation and conventions used in the subclause below are defined in ISO/IEC ISP 10613-1, clause A.2.

Copyright International Organization for Standardization
Provided by IHS under license with ISO
No reproduction or networking permitted without license from IHS
Not for Resale

A.3.2.2 Additional IPRL constraints for ISO 8473

Since the base standard does not itself have a PICS proforma, interim base standard PICS proforma information for an intermediate system is provided in ISO/IEC ISP 10613-1, annex B. When a standardized base standard PICS proforma is available, this part of ISO/IEC ISP 10613 will be revised to refer to it.

This part of ISO/IEC ISP 10613 imposes the following constraint:

Supported functions:

Base Item	Function	Constraint
iDSNS	Simultaneous support of subnetworks with different SN-Userdata sizes	m

Copyright International Organization for Standardization
Provided by IHS under license with ISO
No reproduction or networking permitted without license from IHS Not for Resale

© ISO/IEC

ICS 35.100.00

Descriptors: data processing, information interchange, network interconnection, open systems interconnection, data transmission, connectionless mode transmission, communication procedure, control procedures, network layer, profiles.

Price based on 6 pages

--`,,```,,,,````-`-`,,`,,`,`,,`---

Copyright International Organization for Standardization
Provided by IHS under license with ISO
No reproduction or networking permitted without license from IHS

Not for Resale