INTERNATIONAL STANDARDIZED PROFILE

ISO/IEC ISP 10612-5

First edition
1995-06-15

Information technology — International Standardized Profile RD — Relaying the MAC service using transparent bridging —

Part 5:
Profile RD51.54 (CSMA/CD LAN — FDDI LAN)

Technologies de l'information — Profil normalisé international RD — Transmission du service MAC utilisant un pontage transparent —

Partie 5: Profil RD51.54 (CSMA/CD RLE — FDDI RLE)

Reference number
ISO/IEC ISP 10612-5:1995(E)

Copyright International Organization for Standardization
Provided by IHS under license with ISO
No reproduction or networking permitted without license from IHS

Not for Resale

Contents

Page

Foreword ... iii

Introduction ... v

1 Scope ... 1
1.1 General ... 1
1.2 Position within the taxonomy ... 1
1.3 Scenario ... 1

2 Normative references ... 2

3 Definitions ... 3

4 Abbreviations ... 3

5 Requirements ... 3
5.1 Static conformance requirements ... 3
5.2 Dynamic conformance requirements ... 3

Annex A: ISPICS requirements list (normative) ... 4
A.1 General options of the profile ... 4
A.2 Base standards selected and combined in the profile ... 4
A.3 Constraints on base standards ... 4

Annex B: Additional tutorial material (informative) ... 5
B.1 Introduction ... 5
B.2 FDDI A and C indicators ... 5
B.3 Station management ... 5

© ISO/IEC 1995
All rights reserved. Unless otherwise specified, no part of this publication may be reproduced or utilized in any form or by any means, electronic or mechanical, including photocopying and microfilm, without permission in writing from the publisher.

ISO/IEC Copyright Office · Case postale 56 · CH-1211 Genève · Switzerland

Printed in Switzerland

Copyright International Organization for Standardization
Provided by IHS under license with ISO
No reproduction or networking permitted without license from IHS
Not for Resale

Foreword

ISO (the International Organization for Standardization) and IEC (the International Electrotechnical Commission) form the specialized system for worldwide standardization. National bodies that are members of ISO or IEC participate in the development of International Standards through technical committees established by the respective organization to deal with particular fields of technical activity. ISO and IEC technical committees collaborate in fields of mutual interest. Other international organizations, governmental and non-governmental, in liaison with ISO and IEC, also take part in the work.

In the field of information technology, ISO and IEC have established a joint technical committee, ISO/IEC JTC 1. In addition to developing International Standards, ISO/IEC JTC 1 has created a Special Group on Functional Standardization for the processing of International Standardized Profiles.

An International Standardized Profile is an internationally agreed, harmonized document which identifies a standard or group of standards, together with options and parameters, necessary to accomplish a function or a set of functions.

Draft International Standardized Profiles are circulated to national bodies for voting. Publication as an International Standardized Profile requires approval by at least 75 % of the national bodies casting a vote.

International Standardized Profile ISO/IEC ISP 10612-5 was prepared with the collaboration of

- Asia-Oceania Workshop (AOW);
- European Workshop for Open Systems (EWOS);
- Open Systems Environment Implementors' Workshop (OIW).

ISO/IEC ISP 10612 consists of several parts, under the general title *Information technology - International Standardized Profile RD - Relaying the MAC service using transparent bridging:*

- *Part 1: Subnetwork-independent requirements*
- *Part 2: CSMA/CD LAN subnetwork-dependent, media-dependent requirements*
- *Part 3: Token Ring LAN subnetwork-dependent, media-dependent requirements*
- *Part 4: Profile RD51.51 (CSMA/CD LAN - CSMA/CD LAN)*

Copyright International Organization for Standardization
Provided by IHS under license with ISO
No reproduction or networking permitted without license from IHS
Not for Resale

- *Part 5: Profile RD51.54 (CSMA/CD LAN - FDDI LAN)*
- *Part 6: Profile RD54.54 (FDDI LAN - FDDI LAN)*
- *Part 7: Profile RD51.53 (CSMA/CD LAN - Token Ring LAN)*
- *Part 8: Profile RD53.53 (Token Ring LAN - Token Ring LAN)*
- *Part 9: Profile RD53.54 (Token Ring LAN - FDDI LAN)*

Annex A forms an integral part of this part of ISO/IEC ISP 10612. Annex B is for information only.

Copyright International Organization for Standardization
Provided by IHS under license with ISO
No reproduction or networking permitted without license from IHS Not for Resale

Introduction

ISO/IEC ISP 10612 is defined in accordance with the principles specified by ISO/IEC TR 10000. The context of Functional Standardization is one area in the overall field of Information Technology (IT) standardization activities, covering base standards, profiles, and registration mechanisms. A profile defines a combination of base standards that collectively perform a specific well-defined IT function. Profiles standardize the use of options and other variations in the base standards, and provide a basis for the development of uniform, internationally recognized system tests.

ISPs are produced not simply to 'legitimize' a particular choice of base standards and options, but to promote real system interoperability. One of the most important roles for an ISP is to serve as the basis for the development (by organizations other than ISO and IEC) of internationally recognized test methods. The development and widespread acceptance of tests based on this and other ISPs is crucial to the successful realization of this goal.

ISO/IEC ISP 10612 consists of several parts, of which this is part 5. ISO/IEC ISP 10612-1 specifies the profile requirements which are independent of the subnetwork and media. There are further parts which specify subnetwork-dependent and media-dependent requirements. In addition, for each individual profile, there is a part of ISO/IEC ISP 10612 which identifies the specific requirements of that profile, making reference to appropriate material from part 1 and from the subnetwork-dependent parts.

Copyright International Organization for Standardization
Provided by IHS under license with ISO
No reproduction or networking permitted without license from IHS
Not for Resale

This page is intentionally left blank

Copyright International Organization for Standardization
Provided by IHS under license with ISO
No reproduction or networking permitted without license from IHS Not for Resale

Information technology — International Standardized Profile RD — Relaying the MAC service using transparent bridging —

Part 5:
Profile RD51.54 (CSMA/CD LAN - FDDI LAN)

1 Scope

1.1 General

ISO/IEC ISP 10612 is applicable to interworking units concerned with operating in the Open Systems Interconnection (OSI) environment. It specifies a combination of OSI base standards that collectively provide a MAC relay function between LAN subnetworks. This part of ISO/IEC ISP 10612 is applicable to interworking units operating betwen CSMA/CD and FDDI LAN subnetworks.

ISO/IEC ISP 10612-1 specifies the relay function and LAN subnetwork-independent requirements, ISO/IEC ISP 10612-2 specifies the CSMA/CD LAN subnetwork-dependent requirements, ISO/IEC ISP 10608-14 specifies the FDDI LAN subnetwork-dependent requirements, and this part of ISO/IEC ISP 10612 defines the profile RD51.54.

1.2 Position within the taxonomy

The taxonomy of OSI profiles is defined in ISO/IEC TR 10000-2. This part of ISO/IEC ISP 10612 defines the profile:

RD51.54 Relaying the MAC service, using transparent bridging, between a CSMA/CD LAN subnetwork and an FDDI LAN subnetwork.

1.3 Scenario

Figure 1 illustrates the configuration of systems to which this part of ISO/IEC ISP 10612 is applicable. The figure shows two reference points, but an implementation of this profile may include more attachments to CSMA/CD LAN and FDDI LAN subnetworks with a reference point corresponding to each.

Copyright International Organization for Standardization
Provided by IHS under license with ISO
No reproduction or networking permitted without license from IHS Not for Resale

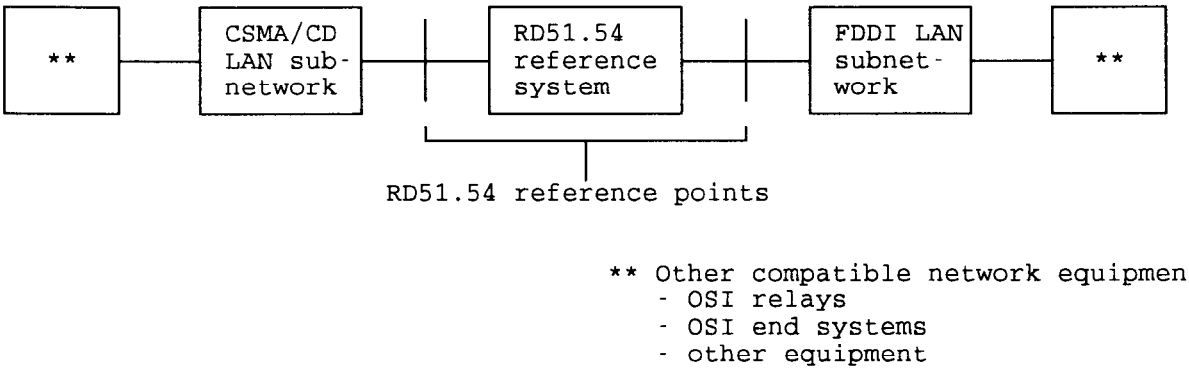

Figure 1 - Scenario of applicability of the RD51.54 profile

This part of ISO/IEC ISP 10612 specifies the required functions from the supporting protocol stack shown in figure 2.

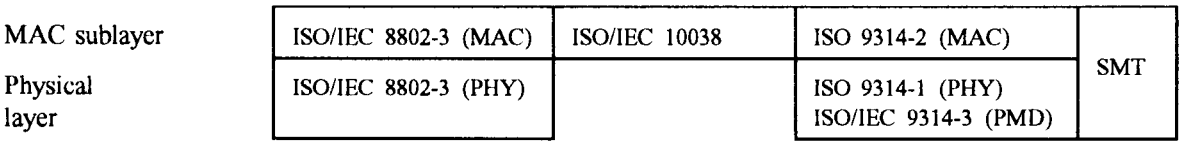

Figure 2 - Protocol stack for the RD51.54 profile

2 Normative references

The following documents contain provisions which, through reference in this text, constitute provisions of this part of ISO/IEC ISP 10612. At the time of publication, the editions indicated were valid. All documents are subject to revision and parties to agreements based on this part of ISO/IEC ISP 10612 are warned against automatically applying any more recent editions of the documents listed below, since the nature of references made by ISPs to such documents is that they may be specific to a particular edition. Members of IEC and ISO maintain registers of currently valid International Standards and ISPs, and ITU-T maintains published editions of its current Recommendations.

ISO/IEC TR 10000-1:1992, *Information technology - Framework and taxonomy of International Standardized Profiles - Part 1: Framework.*

ISO/IEC TR 10000-2:1994, *Information technology - Framework and taxonomy of International Standardized Profiles - Part 2: Principles and Taxonomy for OSI Profiles.*

ISO/IEC ISP 10608-14:1995, *Information technology - International Standardized Profile TAnnnn - Connection-mode Transport Service over Connectionless-mode Network Service - Part 14: MAC, PHY and PMD sublayer dependent and Station Management requirements over an FDDI LAN subnetwork.*

ISO/IEC ISP 10612-1:1995, *Information technology - International Standardized Profile RD - Relaying the MAC service using transparent bridging - Part 1: Subnetwork-independent requirements.*

Copyright International Organization for Standardization
Provided by IHS under license with ISO
No reproduction or networking permitted without license from IHS
Not for Resale

ISO/IEC ISP 10612-2:1995, *Information technology - International Standardized Profile RD - Relaying the MAC service using transparent bridging - Part 2: CSMA/CD LAN subnetwork-dependent, media-dependent requirements.*

Additional normative references are found in each of the ISP parts listed above. These additional normative references are base standards used for development of the relevant ISP parts.

3 Definitions

All the terms used in this part of ISO/IEC ISP 10612 are defined in the documents that are referenced in clause 2.

4 Abbreviations

Abbreviations, including acronyms, are used in this part of ISO/IEC ISP 10612 as defined in the documents that are referenced in clause 2.

5 Requirements

5.1 Static conformance requirements

An implementation conforming to the profile defined in this part of ISO/IEC ISP 10612 shall:

a) support at least one point of attachment to an ISO/IEC 8802-3 CSMA/CD LAN subnetwork, through which it shall support all the features specified as static conformance requirements of parts 1 and 2 of ISO/IEC ISP 10612;

b) support at least one point of attachment to an ISO/IEC 9314 FDDI LAN subnetwork, through which it shall support all the features specified as static conformance requirements of part 1 of ISO/IEC ISP 10612 and part 14 of ISO/IEC ISP 10608;

and shall implement all the features identified as requirements in the ISPICS requirements list in annex A.

5.2 Dynamic conformance requirements

An implementation conforming to the profile defined in this part of ISO/IEC ISP 10612 shall carry out the supported functions according to the applicable dynamic conformance requirements of parts 1 and 2 of ISO/IEC ISP 10612, and of part 14 of ISO/IEC ISP 10608. It shall behave in accordance with the requirements of the ISPICS requirements list in annex A.

Copyright International Organization for Standardization
Provided by IHS under license with ISO
No reproduction or networking permitted without license from IHS
Not for Resale

Annex A
(normative)

ISPICS requirements list

A.1 General options of the profile

There are no general options in this profile.

A.2 Base standards selected and combined in the profile

This profile makes use of the following base standards:

- ISO/IEC 10038
- ISO/IEC 8802-3
- ISO 9314-1
- ISO 9314-2
- ISO/IEC 9314-3

A.3 Constraints on base standards

A conforming implementation of this profile shall:

a) meet all the constraints on the operation of ISO/IEC 10038 which are specified in the ISPICS requirements lists in parts 1 and 2 of ISO/IEC ISP 10612;

b) for operation of the attachments to CSMA/CD LAN subnetworks, meet all the constraints on the operation of ISO/IEC 8802-3 which are specified in the ISPICS requirements list in part 2 of ISO/IEC ISP 10612;

c) for operation of the attachments to FDDI LAN subnetworks, meet all the constraints on the operation of ISO 9314-1, ISO 9314-2 and ISO/IEC 9314-3 which are specified in the ISPICS requirements list in part 14 of ISO/IEC ISP 10608.

Copyright International Organization for Standardization
Provided by IHS under license with ISO
No reproduction or networking permitted without license from IHS Not for Resale

Annex B
(informative)

Additional tutorial material

B.1 Introduction

The information in this annex is tutorial in nature. It does not constitute a normative part of this part of ISO/IEC ISP 10612.

B.2 FDDI A and C indicators

The setting of the Address Recognized (A) and Frame Copied (C) indicators is described in ISO/IEC 10038, subclause 2.5.4.

However, if the A and C indicators are set by the bridge subject to the appropriate conditions, this can not guarantee that the frame has been received by the destination station as, for example, the frame could be discarded by a subsequent bridge between the source and destination stations. Furthermore, these indicators are not subject to FCS checking and therefore could be corrupted without this being evident.

This part of ISO/IEC ISP 10612 does not therefore make any constraint or recommendation on the setting of the A and C indicators other than requiring the imlementation to conform to the base standards (ISO 9314-2 and ISO/IEC 10038).

B.3 Station management

At the time of publication of this part of ISO/IEC ISP 10612, the Station Management (SMT) function of FDDI was not the subject of an International Standard. Reference should be made to annex C of ISO/IEC ISP 10608-14 for requirements relating to SMT.

Copyright International Organization for Standardization
Provided by IHS under license with ISO
No reproduction or networking permitted without license from IHS
Not for Resale

© ISO/IEC

ICS 35.100

Descriptors: data processing, information interchange, network interconnection, open systems interconnection, local area networks, data transmission, communication procedure, medium access control.

Price based on 5 pages

Copyright International Organization for Standardization
Provided by IHS under license with ISO
No reproduction or networking permitted without license from IHS

Not for Resale