INTERNATIONAL STANDARDIZED PROFILE

ISO/IEC ISP 10609-46

First edition
1995-12-15

Information technology — International Standardized Profiles TB, TC, TD and TE — Connection-mode Transport Service over connection-mode Network Service —

Part 46:
Definition of profile TD43211

Technologies de l'information — Profils normalisés internationaux TB, TC, TD et TE — Service de transport en mode connexion sur service de réseau en mode connexion —

Partie 46: Définition du profil TD43211

Reference number
ISO/IEC ISP 10609-46:1995(E)

Copyright International Organization for Standardization
Provided by IHS under license with ISO
No reproduction or networking permitted without license from IHS
Not for Resale

Contents

Page

Foreword iii

Introduction vii

1 Scope 1

2 Normative references 3

3 Definitions 3

4 Abbreviations 3

5 Profile TD43211 4

5.1 Subnetwork-type independent requirements 4

5.2 Subnetwork-type dependent requirements 4

© ISO/IEC 1995
All rights reserved. Unless otherwise specified, no part of this publication may be reproduced or utilized in any form or by any means, electronic or mechanical, including photocopying and microfilm, without permission in writing from the publisher.

ISO/IEC Copyright Office • Case postale 56 • CH-1211 Genève • Switzerland

Printed in Switzerland

Copyright International Organization for Standardization
Provided by IHS under license with ISO
No reproduction or networking permitted without license from IHS
Not for Resale

Foreword

ISO (the International Organization for Standardization) and IEC (the International Electrotechnical Commission) form the specialized system for worldwide standardization. National bodies that are members of ISO or IEC participate in the development of International Standards through technical committees established by the respective organization to deal with particular fields of technical activity. ISO and IEC technical committees collaborate in fields of mutual interest. Other international organizations, governmental and non-governmental, in liaison with ISO and IEC, also take part in the work.

In the field of information technology, ISO and IEC have established a joint technical committee, ISO/IEC JTC 1. In addition to developing International Standards, ISO/IEC JTC 1 has created a Special Group on Functional Standardization for the processing of International Standardized Profiles.

An International Standardized Profile is an internationally agreed, harmonized document which identifies a standard or group of standards, together with options and parameters, necessary to accomplish a function or set of functions.

Draft International Standardized Profiles are circulated to national bodies for voting. Publication as an International Standardized Profile requires approval by at least 75% of the national bodies casting a vote.

International Standardized Profile ISO/IEC ISP 10609-46 was prepared with the collaboration of

- Asia-Oceania Workshop (AOW);
- European Workshop for Open Systems (EWOS);
- Open Systems Environment Implementors' Workshop (OIW).

ISO/IEC ISP 10609 consists of the following parts, under the general title *Information technology - International Standardized Profiles TB, TC, TD and TE - Connection-mode Transport Service over connection-mode Network Service*:

Part 1: Subnetwork-type independent requirements for Group TB

Part 2: Subnetwork-type independent requirements for Group TC

Part 3: Subnetwork-type independent requirements for Group TD

Part 4: Subnetwork-type independent requirements for Group TE

Copyright International Organization for Standardization
Provided by IHS under license with ISO
No reproduction or networking permitted without license from IHS Not for Resale

Part 5: Definition of profiles TB1111/TB1121

Part 6: Definition of profiles TC1111/TC1121

Part 7: Definition of profiles TD1111/TD1121

Part 8: Definition of profiles TE1111/TE1121

Part 9: Subnetwork-type dependent requirements for Network Layer, Data Link Layer and Physical Layer concerning permanent access to a packet switched data network using virtual calls

Part 10: LAN subnetwork-dependent, media-independent requirements

Part 11: CSMA/CD LAN subnetwork-dependent, media-dependent requirements

Part 12: Definition of profile TC51, provision of the OSI connection-mode Transport Service using the OSI connection-mode Network Service in an End System attached to a CSMA/CD LAN

Part 14: Definition of profile TC53, provision of the OSI connection-mode Transport Service using the OSI connection-mode Network Service in an End System attached to a Token Ring LAN

Part 15: Definition of profile TC54, provision of the OSI connection-mode Transport Service using the OSI connection-mode Network Service in an End System attached to an FDDI LAN

Part 20: Overview of the generalized multi-part ISP structure for TC and TD Group profiles for OSI usage of ISDN

Part 21: Subnetwork-type dependent requirements for Network Layer and Data Link Layer for ISDN B-channel X.25 DTE to DTE operation

Part 22: Subnetwork-type dependent requirements for Network Layer and Data Link Layer for ISDN B-channel X.25 DTE to DCE operation

Part 23: Subnetwork-type dependent requirements for Network Layer and Data Link Layer for Data Transfer concerning a packet switched mode Integrated Services Digital Network using virtual calls: B-channel access case

--`,,```,,,,````-`-`,,`,,`,`,,`---
Copyright International Organization for Standardization
Provided by IHS under license with ISO
No reproduction or networking permitted without license from IHS
Not for Resale

Part 24: Subnetwork-type dependent requirements for Network Layer and Data Link Layer for Data Transfer concerning a packet switched mode Integrated Services Digital Network using virtual calls: D-channel access case

Part 25: Subnetwork-type dependent requirements for Q.931 circuit-switched operation

Part 26: Subnetwork-type dependent requirements for Network Layer for Call Control procedures concerning the outgoing call of a packet switched mode Integrated Services Digital Network in case B using virtual calls

Part 27: Subnetwork-type dependent requirements for Network Layer for Call Control procedures concerning the incoming call of a packet switched mode Integrated Services Digital Network in case B using virtual calls

Part 28: Subnetwork-type dependent requirements for Data Link Layer for end systems attached to an ISDN subnetwork

Part 30: Definition of profile TC1131

Part 31: Definition of profile TC1231

Part 32: Definition of profile TC4111

Part 33: Definition of profile TC4211

Part 34: Definition of profile TC43111

Part 35: Definition of profile TC43112

Part 36: Definition of profile TC43211

Part 37: Definition of profile TC43212

Part 38: Definition of profile TC4331

Part 40: Definition of profile TD1131

Part 41: Definition of profile TD1231

Part 42: Definition of profile TD4111

Part 43: Definition of profile TD4211

Copyright International Organization for Standardization
Provided by IHS under license with ISO
No reproduction or networking permitted without license from IHS
Not for Resale

Part 44: Definition of profile TD43111

Part 45: Definition of profile TD43112

Part 46: Definition of profile TD43211

Part 47: Definition of profile TD43212

Part 48: Definition of profile TD4331

Copyright International Organization for Standardization
Provided by IHS under license with ISO
No reproduction or networking permitted without license from IHS Not for Resale

Introduction

This International Standardized Profile (ISP) is defined in accordance with the principles specified by ISO/IEC Technical Report 10000, "Information Technology - Framework and taxonomy of International Standardized Profiles".

The context of Functional Standardization is one area in the overall field of Information Technology (IT) standardization activities, covering base standards, profiles, and registration mechanisms. A profile defines a combination of base standards that collectively perform a specific well-defined IT function. Profiles standardize the use of options and other variations in the base standards, and provide a basis for the development of uniform, internationally recognized system tests.

ISPs are produced not simply to 'legitimize' a particular choice of base standards and options, but to promote real system interoperability. One of the most important roles for an ISP is to serve as the basis for the development (by organizations other than ISO and IEC) of internationally recognized test methods. The development and widespread acceptance of tests based on this and other ISPs is crucial to the successful realization of this goal.

ISO/IEC ISP 10609 consists of several parts of which this is part 46. This part of ISO/IEC ISP 10609 identifies the specific requirements of TD43211, making reference to appropriate material from part 1 and from the subnetwork dependent parts of ISO/IEC ISP 10609. There are also some parts which specify subnetwork-dependent and media-dependent requirements, and the other parts which specifies the profile requirements that are subnetwork-independent.

Copyright International Organization for Standardization
Provided by IHS under license with ISO
No reproduction or networking permitted without license from IHS Not for Resale

Information technology - International Standardized Profiles TB, TC, TD and TE - Connection-mode Transport Service over connection-mode Network Service

Part 46:
Definition of profile TD43211

1 Scope

1.1 General

ISO/IEC ISP 10609 is applicable to end systems concerned with operating in the Open Systems Interconnection (OSI) environment. It specifies a combination of OSI standards, which collectively provide the connection-mode Transport Service using the connection-mode Network Service.

This part of ISO/IEC ISP 10609 specifies the definition of Profile TD43211. The TD43211 profile is in the TC group which supports Transport protocol class 0.

1.2 Position of Profiles within the Taxonomy

The taxonomy of profiles is defined in ISO/IEC TR 10000-2. This part of ISO/IEC ISP 10609 defines the profile:

TD43211	Connection-mode Transport Service over Connection-mode Network Service over ISDN - Packet mode service - B-channel permanent access - Virtual Call (VC) without use of Q.931

NOTE - At the date of publication, there is no difference from a terminal point of view between "permanent" and "semi-permanent" connections. However, ITU-T may define a procedure that would allow an ISDN terminal to have a semi-permanent connection set up in support of permanent B-channel. At that time, amendments to this profile may be necessary. This profile uses the term "permanent".

This profile may be combined with any A-profile at the A/T boundary

Copyright International Organization for Standardization
Provided by IHS under license with ISO
No reproduction or networking permitted without license from IHS
Not for Resale

1.3 Scenario

Figure 1 illustrates the end system configurations to which TD43211 profile is applicable.

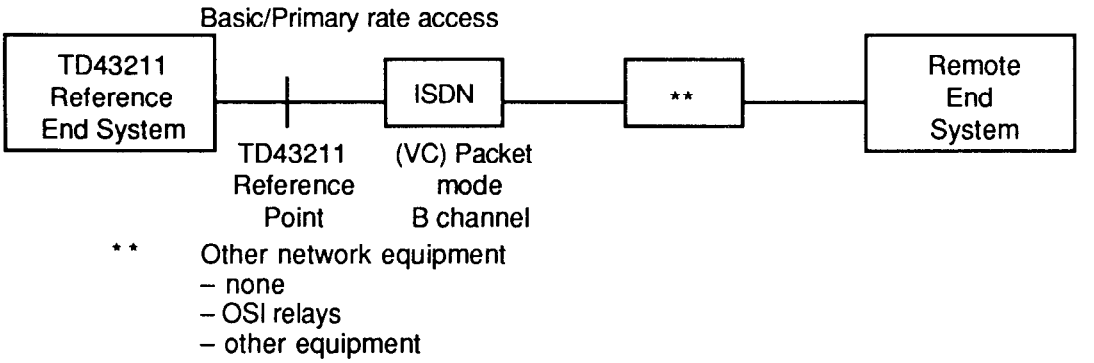

Figure 1 - Scenario of Applicability of the TD43211 Profile

The reference End System is directly attached to the ISDN at an S/T reference point of a Basic or a Primary Rate Access.

This part of ISO/IEC ISP 10609 specifies the required functions from the supporting protocol stack shown in Figure 2.

Transport Layer	ISO/IEC 8073
Network Layer	ISO/IEC 9574 with ISO/IEC 8878
	ISO/IEC 8208
Data Link Layer	ISO 7776
Physical Layer	CCITT I.430, I.431

Figure 2 - Profile protocol stack for TD43211 end system

At layer 1, CCITT I.430 is used for ISDN basic access and CCITT I.431 is used for primary rate access. At layer 2, ISO 7776 provides the LAPB Data Link procedures for the B-channel. At layer 3, ISO/IEC 8208 packet layer protocol is used in DTE/DCE mode on the B-channel. The provisions of ISO/IEC 8878 apply with regard to the mapping of the CONS primitives and parameters to and from the elements of the ISO/IEC 8208 packet layer protocol.

Network Service connection establishment and release are single stage processes, involving the establishment or release of a virtual call. (But, the Data Link layer connection need to be established by user or PH.)

Copyright International Organization for Standardization
Provided by IHS under license with ISO
No reproduction or networking permitted without license from IHS Not for Resale

2 Normative references

The following documents contain provisions which, through reference in this text, constitute provisions of this part of ISO/IEC ISP 10609. At the time of publication, the editions indicated were valid. All documents are subject to revision, and parties to agreements based on this part of ISO/IEC ISP 10609 are warned against automatically applying any more recent editions of the documents listed below, since the nature of references made by ISPs to such documents, is that they may be specific to a particular edition. Members of IEC and ISO maintain registers of currently valid International Standards and ISPs, and ITU-T maintains published editions of its current Recommendations.

ISO/IEC ISP 10609-3:1992, *Information technology - International Standardized Profiles TB, TC, TD and TE - Connection-mode Transport Service over connection-mode Network Service - Part 3: Subnetwork-type independent requirements for Group TD.*

ISO/IEC ISP 10609-23:1995, *Information technology - International Standardized Profiles TB, TC, TD and TE - Connection-mode Transport Service over connection-mode Network Service - Part 23: Subnetwork-type dependent requirements for Network Layer and Data Link Layer for Data Transfer concerning a packet switched mode Integrated Services Digital Network using virtual calls: B-channel access case.*

CCITT Rec. I.430 (1988), *Basic user-network interface - Layer 1 specification.*

CCITT Rec. I.431 (1988), *Primary rate user-network interface - Layer 1 specification.*

3 Definitions

All of the terms used in this part of ISO/IEC ISP 10609 are defined in the referenced base standards (see clause 2).

4 Abbreviations

ISDN:	Integrated Services Digital Network
CONS:	Connection-mode Network Service
PH:	Packet Handler

Copyright International Organization for Standardization
Provided by IHS under license with ISO
No reproduction or networking permitted without license from IHS Not for Resale

5 Profile TD43211

5.1 Subnetwork-type independent requirements

Subnetwork-type independent requirements for Transport Layer are specified in ISO/IEC ISP 10609-3.

5.2 Subnetwork-type dependent requirements

Subnetwork-type dependent requirements for Network Layer are specified in ISO/IEC ISP 10609-23.

Subnetwork-type dependent requirements for Data Link Layer are specified in ISO/IEC ISP 10609-23.

Subnetwork-type dependent requirements for Physical Layer are specified in CCITT Recommendations I.430 and I.431.

--`,,```,,,,````-`-`,,`,,`,`,,`---

Copyright International Organization for Standardization
Provided by IHS under license with ISO
No reproduction or networking permitted without license from IHS Not for Resale

© ISO/IEC

ICS 35.100

Descriptors: data processing, information interchange, network interconnection, open systems interconnection, data transmission, communication procedure, control procedures, transport layer, network layer, data link layer, physical layer, profiles.

Price based on 4 pages

Copyright International Organization for Standardization
Provided by IHS under license with ISO
No reproduction or networking permitted without license from IHS

Not for Resale