INTERNATIONAL STANDARDIZED PROFILE

ISO/IEC ISP 10609-20

First edition
1995-12-15

Information technology — International Standardized Profiles TB, TC, TD and TE — Connection-mode Transport Service over connection-mode Network Service —

Part 20:

Overview of the generalized multi-part ISP structure for TC and TD Group profiles for OSI usage of ISDN

Technologies de l'information — Profils normalisés internationaux TB, TC, TD et TE — Service de transport en mode connexion sur service de réseau en mode connexion —

Partie 20: Introduction à la structure généralisée ISP multipartite pour les profils de groupes TC et TD

Reference number
ISO/IEC ISP 10609-20:1995(E)

Copyright International Organization for Standardization
Provided by IHS under license with ISO
No reproduction or networking permitted without license from IHS

Not for Resale

Contents

Page

Foreword iii

Introduction vi

1 Scope 1
- 1.1 General 1
- 1.2 Position within the taxonomy 1
- 1.3 Scenario 2

2 Normative references 3

3 Definitions 4

4 Abbreviations 4

5 Overview of multi-part structure for OSI/ISDN T-profiles 5
- 5.1 Description of the multi-part OSI/ISDN T-profile architectural structure 5
- 5.2 B and D-channel protocol stacks 12
- 5.3 Architectural simplicity of the multi-part OSI/ISDN T-profile structure 12

Annex A: Channel selection through call offering 15

Annex B: Titles of profiles and all ISP parts referenced in the OSI/ISDN T-profiles 18

© ISO/IEC 1995
All rights reserved. Unless otherwise specified, no part of this publication may be reproduced or utilized in any form or by any means, electronic or mechanical, including photocopying and microfilm, without permission in writing from the publisher.

ISO/IEC Copyright Office • Case postale 56 • CH-1211 Genève • Switzerland

Printed in Switzerland

Copyright International Organization for Standardization
Provided by IHS under license with ISO
No reproduction or networking permitted without license from IHS
Not for Resale

Foreword

ISO (the International Organization for Standardization) and IEC (the International Electrotechnical Commission) form the specialized system for worldwide standardization. National bodies that are members of ISO or IEC participate in the development of International Standards through technical committees established by the respective organization to deal with particular fields of technical activity. ISO and IEC technical committees collaborate in fields of mutual interest. Other international organizations, governmental and non-governmental, in liaison with ISO and IEC, also take part in the work.

In the field of information technology, ISO and IEC have established a joint technical committee, ISO/IEC JTC 1. In addition to developing International Standards, ISO/IEC JTC 1 has created a Special Group on Functional Standardization for the processing of International Standardized Profiles.

An International Standardized Profile is an internationally agreed, harmonized document which identifies a standard or group of standards, together with options and parameters, necessary to accomplish a function or set of functions.

Draft International Standardized Profiles are circulated to national bodies for voting. Publication as an International Standardized Profile requires approval by at least 75% of the national bodies casting a vote.

International Standardized Profile of ISO/IEC ISP 10609-20 was prepared with the collaboration of

- Asia-Oceania Workshop (AOW);
- European Workshop for Open Systems (EWOS);
- Open Systems Environment Implementors' Workshop (OIW).

ISO/IEC ISP 10609 consists of the following parts, under the general title *Information technology - International Standardized Profiles TB, TC, TD and TE - Connection-mode Transport Service over connection-mode Network Service*:

Part 1: Subnetwork-type independent requirements for Group TB

Part 2: Subnetwork-type independent requirements for Group TC

Part 3: Subnetwork-type independent requirements for Group TD

Part 4: Subnetwork-type independent requirements for Group TE

Part 5: Definition of profiles TB1111/TB1121

Part 6: Definition of profiles TC1111/TC1121

Part 7: Definition of profiles TD1111/TD1121

Part 8: Definition of profiles TE1111/TE1121

Part 9: Subnetwork-type dependent requirements for Network Layer, Data Link Layer and Physical Layer concerning permanent access to a packet switched data network using virtual calls

Part 10: LAN subnetwork-dependent, media-independent requirements

Copyright International Organization for Standardization
Provided by IHS under license with ISO
No reproduction or networking permitted without license from IHS Not for Resale

Part 11: CSMA/CD LAN subnetwork-dependent, media-dependent requirements

Part 12: Definition of profile TC51, provision of the OSI connection-mode Transport Service using the OSI connection-mode Network Service in an End System attached to a CSMA/CD LAN

Part 14: Definition of profile TC53, provision of the OSI connection-mode Transport Service using the OSI connection-mode Network Service in an End System attached to a Token Ring LAN

Part 15: Definition of profile TC54, provision of the OSI connection-mode Transport Service using the OSI connection-mode Network Service in an End System attached to an FDDI LAN

Part 20: Overview of the generalized multi-part ISP structure for TC and TD Group profiles for OSI usage of ISDN

Part 21: Subnetwork-type dependent requirements for Network Layer and Data Link Layer for ISDN B-channel X.25 DTE to DTE operation

Part 22: Subnetwork-type dependent requirements for Network Layer and Data Link Layer for ISDN B-channel X.25 DTE to DCE operation

Part 23: Subnetwork-type dependent requirements for Network Layer and Data Link Layer for Data Transfer concerning a packet switched mode Integrated Services Digital Network using virtual calls: B-channel access case

Part 24: Subnetwork-type dependent requirements for Network Layer and Data Link Layer for Data Transfer concerning a packet switched mode Integrated Services Digital Network using virtual calls: D-channel access case

Part 25: Subnetwork-type dependent requirements for Q.931 circuit-switched operation

Part 26: Subnetwork-type dependent requirements for Network Layer for Call Control procedures concerning the outgoing call of a packet switched mode Integrated Services Digital Network in case B using virtual calls

Part 27: Subnetwork-type dependent requirements for Network Layer for Call Control procedures concerning the incoming call of a packet switched mode Integrated Services Digital Network in case B using virtual calls

Part 28: Subnetwork-type dependent requirements for Data Link Layer for end systems attached to an ISDN subnetwork

Part 30: Definition of profile TC1131

Part 31: Definition of profile TC1231

Part 32: Definition of profile TC4111

Part 33: Definition of profile TC4211

Part 34: Definition of profile TC43111

Part 35: Definition of profile TC43112

Copyright International Organization for Standardization
Provided by IHS under license with ISO
No reproduction or networking permitted without license from IHS Not for Resale

Part 36: Definition of profile TC43211

Part 37: Definition of profile TC43212

Part 38: Definition of profile TC4331

Part 40: Definition of profile TD1131

Part 41: Definition of profile TD1231

Part 42: Definition of profile TD4111

Part 43: Definition of profile TD4211

Part 44: Definition of profile TD43111

Part 45: Definition of profile TD43112

Part 46: Definition of profile TD43211

Part 47: Definition of profile TD43212

Part 48: Definition of profile TD4331

Annexes A and B of this part of ISO/IEC ISP 10609 are for information only.

Copyright International Organization for Standardization
Provided by IHS under license with ISO
No reproduction or networking permitted without license from IHS
Not for Resale

Introduction

This International Standardized Profile (ISP) is defined in accordance with the principles specified by ISO/IEC Technical Report 10000, "Information technology - Framework and taxonomy of International Standardized Profiles".

The context of Functional Standardization is one area in the overall field of Information Technology (IT) standardization activities, covering base standards, profiles, and registration mechanisms. A profile defines a combination of base standards that collectively perform a specific well-defined IT function. Profiles standardize the use of options and other variations in the base standards, and provide a base for the development of uniform, internationally recognized system tests.

ISPs are produced not simply to "legitimize" a particular choice of base standards and options, but to promote real system interoperability. One of the most important roles for an ISP is to serve as the basis for the development (by organizations other than ISO and IEC) of internationally recognized test methods. The development and widespread acceptance of tests based on this and other ISPs is crucial to the successful realization of this goal.

ISO/IEC ISP 10609 consists of several parts of which this is part 20. This part of ISO/IEC ISP 10609 provides information on the structure and relationship of the ISDN based profile parts to each other and to other parts of ISO/IEC ISP 10609. There are further parts which specify profile requirements that are subnetwork-independent or specific to particular types of subnetwork. In addition, for each individual profile there is a part of ISO/IEC ISP 10609 which identifies the specific requirements of that profile, making reference to appropriate material from parts 2 or 3, and from the subnetwork dependent parts of ISO/IEC ISP 10609.

Copyright International Organization for Standardization
Provided by IHS under license with ISO
No reproduction or networking permitted without license from IHS Not for Resale

Information technology — International Standardized Profiles TB, TC, TD and TE — Connection-mode Transport Service over connection-mode Network Service —

Part 20:
Overview of the generalized multi-part ISP structure for TC and TD Group profiles for OSI usage of ISDN

1 Scope

1.1 General

ISO/IEC ISP 10609 is applicable to end systems concerned with operating in the Open Systems Interconnection (OSI) environment. It specifies a combination of OSI standards, which collectively provide the connection-mode Transport Service using the connection-mode Network Service.

This part of ISO/IEC ISP 10609 provides an overview of the multi-part structure for the ISDN TA profiles (which provide the Connection-mode Transport Service (COTS) using the Connectionless-mode Network Service (CLNS)) and for the ISDN TC and TD profiles (which provide the Connection-mode Transport Service (COTS) using the Connection-mode Network Service (CONS)).

1.2 Position within the taxonomy

This part of ISO/IEC ISP 10609 covers the taxonomy elements using an ISDN subnetwork with Transport Groups TA, TC and TD as described in the ISO/IEC TR 10000-2. In particular, it provides an overview and description of a generalized multi-part structure covering the following ISDN ISPs:

- Tx 1131, Tx 1231, Tx 4111, Tx 4211, Tx 4311q, Tx 4321q and Tx 4331 (Tx=TA, TC and TD and q=1 or 2).
    - TA => COTS over CLNS (to be developed)
    - TC => COTS over CONS with Mandatory Transport Protocol Classes 0 and 2
    - TD => COTS over CONS with Mandatory Transport Protocol Class 0

Copyright International Organization for Standardization
Provided by IHS under license with ISO
No reproduction or networking permitted without license from IHS Not for Resale

1.3 Scenario

Figure 1 illustrates the seven access scenarios[1] relevant to the ISDN based ISPs, as contained in ISO/IEC TR 10000-2. Figure 2 shows the end system configuration applicable to the seven access scenarios illustrated in figure 1.

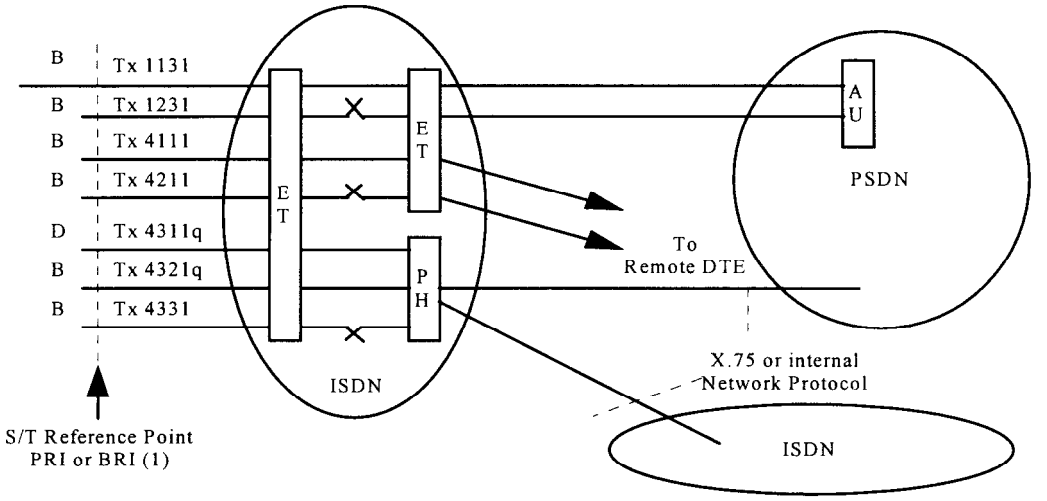

(1) => An S/T Reference Point designates a "T reference point", an "S reference point" or a "coincident S and T reference point."

Figure 1 - Illustration of the access scenarios

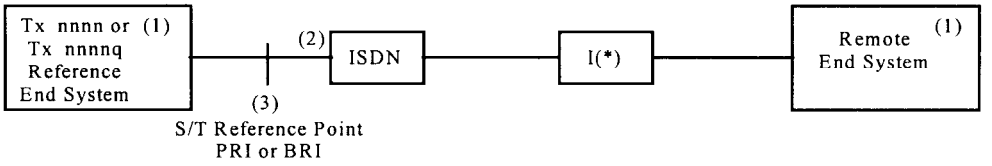

nnnn => Any of the profile numbers shown in Figure 1
x => A, C, or D
q => Takes the value 1 or 2 in Tx 4311q and Tx 4321q profiles to indicate whether Q.931 is needed
(1) => The end system supports appropriate stack of protocols
(2) => Virtual circuit or circuit switched bearer service, permanent* or demand access channel. X.25 Permanent Virtual Circuits (PVCs) are outside the scope of ISO/IEC ISP 10609.
(3) => An S/T Reference Point designates a "T reference point", an "S reference point" or a "coincident S and T reference point."
(*) => This can be an ISDN or a PSPDN sub-network or other OSI relays or null

* Permanent and Semi-Permanent accesses are the same from the view of a DTE and as such, the usage "Permanent" is used throughout this part of ISO/IEC ISP 10609.

Figure 2 - Scenario of applicability of the COTS/CONS and COTS/CLNS Tx profiles

[1] Five of these access scenarios (i.e., Tx 1131, Tx 1231, Tx 4311q, Tx 4321q and Tx 4331) are defined in CCITT Recommendations X.31 and X.612, and ISO/IEC 9574. The two remote access to DTE scenarios (i.e., Tx 4111 and Tx 4211) are defined in ISO/IEC 9574/DAM 1 and draft revision of CCITT Recommendation X.612 (but not described in CCITT Recommendations X.31). Profiles Tx 4311q and Tx 4321q are further sub-classified by use of a fifth digit "q" (q = 1 or 2) depending on the need for using the signaling protocol Q.931 (e.g., for Tx 4311q, the fifth digit "1" in Tx 43111 represents no need for the use of Q.931 whereas the fifth digit "2" in Tx 43112 represents the need for the use of the signaling protocol Q.931).

Copyright International Organization for Standardization
Provided by IHS under license with ISO
No reproduction or networking permitted without license from IHS
Not for Resale

2 Normative references

The following documents contain provisions which, through reference in this text, constitute provisions of this part of ISO/IEC ISP 10609. At the time of publication, the editions indicated were valid. All documents are subject to revision, and parties to agreements based on this part of ISO/IEC ISP 10609 are warned against automatically applying any more recent editions of the documents listed below, since the nature of references made by ISPs to such documents is that they may be specific to a particular edition. Members of IEC and ISO maintain registers of currently valid International Standards and ISPs, and ITU-T maintains published editions of its current Recommendations.

ISO/IEC 7776:1995, *Information technology - Telecommunications and information exchange between systems - High-level data link control procedures - Description of the X.25 LAPB-compatible DTE data link procedures.*

ISO/IEC 8073:1992, *Information technology - Telecommunications and information exchange between systems - Open Systems Interconnection - Protocol for providing the connection-mode transport service.*

ISO/IEC 8208:1995, *Information technology - Data communications - X.25 Packet Layer Protocol for Data Terminal Equipment.*

ISO/IEC 8348:1993, *Information technology - Open Systems Interconnection - Network Service Definition.*

ISO/IEC 8473-1:1994, *Information technology - Protocol for providing the connectionless-mode network service: Protocol specification.* [See also ITU-T Recommendation X.233 (1993)]

NOTE - ISO/IEC 7776:1995, ISO/IEC 8073:1992, ISO/IEC 8208:1995, ISO/IEC 8348:1993 and ISO/IEC 8473-1:1994 supersede ISO 7776:1986, ISO 8073:1988, ISO/IEC 8208:1990, ISO 8348:1987 and ISO 8473:1988 respectively. However, when this part of ISO/IEC ISP 10609 was under development, the previous editions were valid and this part of ISO/IEC ISP 10609 is therefore based on these editions. The new editions give extensions and incorporate all of the amendments and corrigenda to the previous editions, which are listed below.

ISO 7776:1986, *Information processing systems - Data communications - High-level data link control procedures - Description of the X.25 LAPB-compatible DTE data link procedures.*

ISO 8073:1988, *Information processing systems - Open Systems Interconnection - Connection-mode transport protocol specification.*

ISO 8073:1988/Add. 2:1989, *Information processing systems - Open Systems Interconnection - Connection-mode transport protocol specification, Addendum 2: Class four operation over connectionless network service.*

ISO/IEC 8208:1990, *Information technology - Data communications - X.25 Packet Layer Protocol for Data Terminal Equipment.*

ISO 8348:1987, *Information processing systems - Data communications - Network service definition.*

ISO 8348:1987/Add. 1:1988, *Information processing systems - Data communications - Network service definition, Addendum 1: Connectionless-mode transmission.*

ISO 8473:1988, *Information processing systems - Data communications - Protocol for providing the connectionless-mode network service.*

ISO/IEC 8878:1992, *Information technology - Telecommunications and information exchange between systems - Use of X.25 to provide the OSI Connection-mode Network Service.*

ISO/IEC 8878:1992/Cor.1:1993, *Information technology - Telecommunications and information exchange between systems - Use of X.25 to provide the OSI Connection-mode Network Service, Technical Corrigendum 1.*

ISO/IEC 8878:1992/Cor.2:1993, *Information technology - Telecommunications and information exchange between systems - Use of X.25 to provide the OSI Connection-mode Network Service, Technical Corrigendum 2.*

Copyright International Organization for Standardization
Provided by IHS under license with ISO
No reproduction or networking permitted without license from IHS
Not for Resale

ISO/IEC 9542:1988, *Information processing systems - Telecommunications and information exchange between systems - End system to Intermediate system routing exchange protocol for use in conjunction with the Protocol for providing the connectionless-mode network service (ISO 8473).*

CCITT Rec. X.612 (1992) | ISO/IEC 9574:1992, *Information technology - Provision of the OSI connection-mode network service by packet mode terminal equipment connected to an integrated services digital network (ISDN).*

ISO/IEC TR 10000-1:1992, *Information technology - Framework and taxonomy of International Standardized Profiles - Part 1: Framework.*

ISO/IEC TR 10000-2:1994, *Information technology - Framework and taxonomy of International Standardized Profiles - Part 2: Principles and Taxonomy for OSI Profiles.*

CCITT Rec. I.430 (1988), *Basic User-Network Interface - Layer 1 Specification.*

CCITT Rec. I.431 (1988), *Primary Rate User-Network Interface - Layer 1 Specification.*

CCITT Rec. Q.921 (1988), *ISDN User-Network Interface Data Link Layer Specification.*

CCITT Rec. Q.931 (1988), *ISDN User-Network Interface Layer 3 Specification for Basic Call Control.*

CCITT Rec. X.25 (1988), *Interface between Data Terminal Equipment (DTE) and Data Circuit-Terminating Equipment (DCE) for terminals operating in the Packet Mode and connected to Public Data Networks by dedicated circuit.*

CCITT Rec. X.31 (1992), *Support of Packet Mode Terminal Equipment by an ISDN.*

CCITT Rec. X.32 (1992), *Interface between Data Terminal Equipment (DTE) and Data Circuit-Terminating Equipment (DCE) for terminals operating in a Packet Mode and accessing a Packet Switched Public Data Network through a Public Switched Telephone Network or an Integrated Service Digital Network or a Circuit Switched Public Data Network.*

CCITT Rec. X.213 (1988), *Network Service Definition for Open Systems Interconnection for CCITT Applications.*

CCITT Rec. X.223 (1988), *Use of X.25 to provide the OSI Connection-mode Network Service for CCITT Applications.*

CCITT Rec. X.224 (1988), *Transport protocol specification for Open Systems Interconnection for CCITT applications.*

3 Definitions

All the terms used in this part of ISO/IEC ISP 10609 are defined in the referenced base standards (see clause 2).

4 Abbreviations

The following abbreviations are used in this part of ISO/IEC ISP 10609:

AU	Access Unit
BRI	Basic Rate Interface
CLNP	Connectionless-mode Network Protocol
CLNS	Connectionless-mode Network Service
CM	Circuit Mode
CONS	Connection-mode Network Service

Copyright International Organization for Standardization
Provided by IHS under license with ISO
No reproduction or networking permitted without license from IHS Not for Resale

COTS	Connection-mode Transport Service
CS	Circuit Switched
CSPDN	Circuit Switched Public Data Network
DA	Demand Access
DCE	Data Circuit-terminating Equipment
DTE	Data Terminal Equipment
ET	Exchange Termination
ISDN	Integrated Services Digital Network
LAPB	Link Access Protocol - Balanced
LAPD	Link Access Protocol on the D-channel
NL	Network Layer
PH	Packet Handler
PLP	Packet Layer Protocol
PM	Packet Mode
PRI	Primary Rate Interface
PSPDN	Packet Switched Public Data Network
PS	Packet Switched
PVC	Permanent Virtual Circuit
VC	Virtual Circuit

5 Overview of multi-part structure for OSI/ISDN T-profiles

The multi-part ISP structure described in this clause for the OSI/ISDN T-profiles, corresponding to the seven access scenarios shown in figure 1, has two purposes.

1. The multi-part ISP structure provides a "roadmap" in terms of the common parts in figure 3-2 to specify an OSI/ISDN T-Profile.

2. The multi-part structure also points out an architectural simplicity, from a DTE view point, for the implementation of multiple profiles.

One of the principal differences among the various access scenarios is the use of the signaling protocol Q.931 for the B-channel setup and its use in channel selection through call offering. The relationship between Q.931 call offering procedures and notification classes is described in annex A.

Subclause 5.1 describes how a roadmap, in terms of the common parts, can be constructed to specify an OSI/ISDN T-profile. Subclause 5.2 describes a general arrangement for the B and D-channel protocol stacks that are applicable to all the access scenarios described in figure 1. Subclause 5.3 illustrates the architectural simplicity of the multi-part OSI/ISDN T-profile structure from a DTE view point.

5.1 Description of the multi-part OSI/ISDN T-profile architectural structure

The multi-part OSI/ISDN T-Profile architectural structure for the seven access scenarios in figure 1 is shown in table 1. The rows of table 1 show the access scenarios identified by the ISP # that is specified in ISO/IEC TR 10000-2 (see also figure 1). The three major columns (i.e., Access Attributes Description, D- and B-Channel columns) describe various characteristics associated with the access scenarios. The group of sub-columns under the "Access Attributes Description" column specify the attributes (e.g., type of ISDN bearer service) pertaining to a particular access scenario. The group of sub-columns under the D- and B-channel columns specifies significant components of the protocol stacks for each scenario and, in particular, identifies the significant common part (e.g. 10609-25 for Q.931 Circuit Mode) referenced by each resulting OSI/ISDN T-profile.

The "D-CHANNEL" column is sub-divided into two sub-columns as Q.931 and X.25 PLP representing whether the D-channel is used for Q.931 signaling or X.25 PLP or both. The Q.931 channel setup is further sub-divided into the circuit mode (CM) and packet mode (PM) sub-columns. The need for the use of the Q.931 signaling protocol for setting up a B-channel is indicated by "YES" in the appropriate "CM", "PM-OUT" or "PM-IN" sub-

Copyright International Organization for Standardization
Provided by IHS under license with ISO
No reproduction or networking permitted without license from IHS Not for Resale

columns. A "YES" in Q.931 "CM" or "PM-IN" sub-columns may also indicate the use of Q.931 on the D-channel for the call offering procedures when they are applicable. The scenarios in which the call offering procedures are applicable are the virtual circuit bearer service (i.e. Case B) scenarios. Tx 4331 profile is an example case in which Q.931 is used for the outgoing calls.

When X.25 PLP is used on a B-channel, a further distinction must be made as to whether X.25 PLP and ISO 7776 operate in a DTE/DCE or DTE/DTE mode. Note 1 in the DTE/DTE and DTE/DCE sub-columns under the B-channel column in table 1 indicates the common parts used corresponding to the use of X.25 PLP and ISO 7776 protocols.

Figure 3-1 shows the general layout of the multi-part OSI/ISDN T-profile structure. The "Common Parts" shown in figure 3-2 are used by two or more access scenarios. The items on the left represent common parts for TA (COTS over CLNS) profiles in support of the protocols in the ISDN bearer channel (e.g., ISO 8473, ISO 7776 or Q.921) while those on the right represent the same aspects for TC/TC (COTS over CONS) profiles. Figures 3-3, 3-4 and 3-5 show protocols at each layer up to the Transport Layer and indicate the common part numbers applicable for a particular profile. These figures cover all the Tx nnnnq (where x = A, C and D) profiles. The notation "9-nn" used in the D-channel sub-columns in table 1, for example, denote the common parts "10609-nn" in figure 3-2. Annex B lists the titles of all of the parts referenced in figures 3-1 through 3-5.

NOTE - Although references are made in figures 3-1 through 3-5 to parts of ISO/IEC ISP 10608, there is no effort at this time to develop these profiles. The purpose of the references in the figures is to provide the structure of the T-profiles.

Table 1 - Multi-part OSI/ISDN T-profile structure for the access scenarios in figure 1

ISP #	Access Attributes Description								D-Channel				B-Channel	
	ISDN Service		ISDN Channel			Access To			Q.931			X.25	X.25PLP/ ISO 7776	
	CM	VC	B Perm.	B DA	D	AU in ISDN	PH in ISDN	Remote DTE	CM 9-25	PM OUT 9-26	PM IN 9-27	PLP 9-24	DTE/ DCE Note 1	DTE/ DTE Note 1
Tx 1131	YES		YES			YES							YES	
Tx 1231	YES			YES		YES			YES Note 2				YES	
Tx 4111	YES		YES					YES						YES
Tx 4211	YES			YES				YES	YES					YES
Tx 43111		YES			YES		YES					YES		
Tx 43112		YES			YES		YES				YES Note 3	YES		
Tx 43211		YES	YES				YES						YES	
Tx 43212		YES	YES				YES				YES Note 3		YES	
Tx 4331		YES		YES			YES			YES	YES Note 3		YES	

NOTE 1 - The common parts corresponding to the use of X.25 PLP and ISO 7776 in B-Channel in the DTE/DCE and DTE/DTE mode of operation are shown in figures 3-3 through 3-5. These protocols operate over the ISDN Layer 1 protocols (i.e., I.430/I.431).

NOTE 2 - Rec. X.31 allows use of Q.931 call offering for the conditional notification class.

NOTE 3 - The need for the call offering procedures in virtual circuit configuration depends on provisioning of D- and B-channels and provisioning of notification class (for q=2).

CM => Circuit Mode
DA => Demand Access
PM => Packet Mode
Perm. => Permanent
VC => Virtual Circuit

Copyright International Organization for Standardization
Provided by IHS under license with ISO
No reproduction or networking permitted without license from IHS Not for Resale

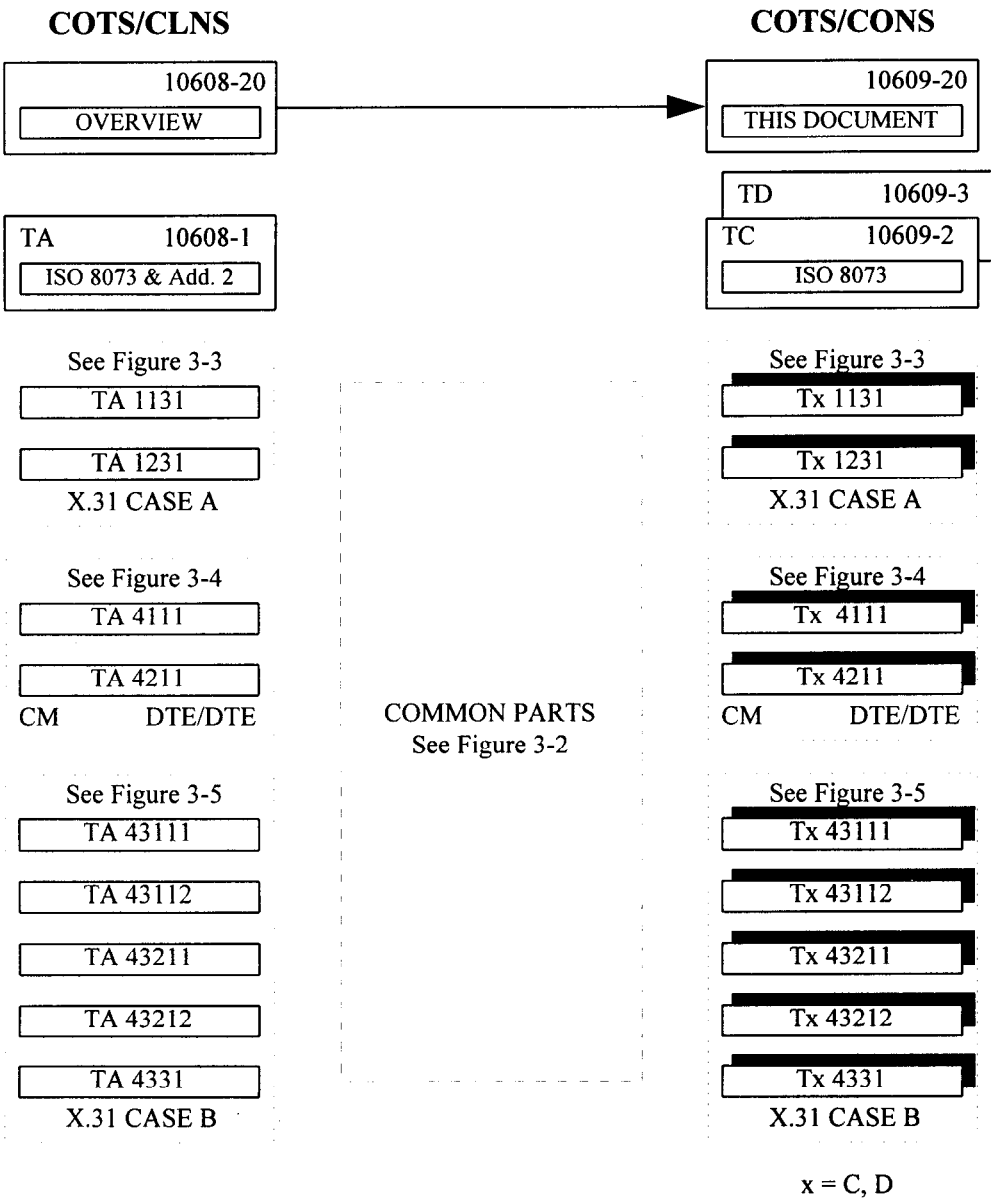

Figure 3-1 - Multi-part OSI/ISDN T-profile structure

Copyright International Organization for Standardization
Provided by IHS under license with ISO
No reproduction or networking permitted without license from IHS
Not for Resale

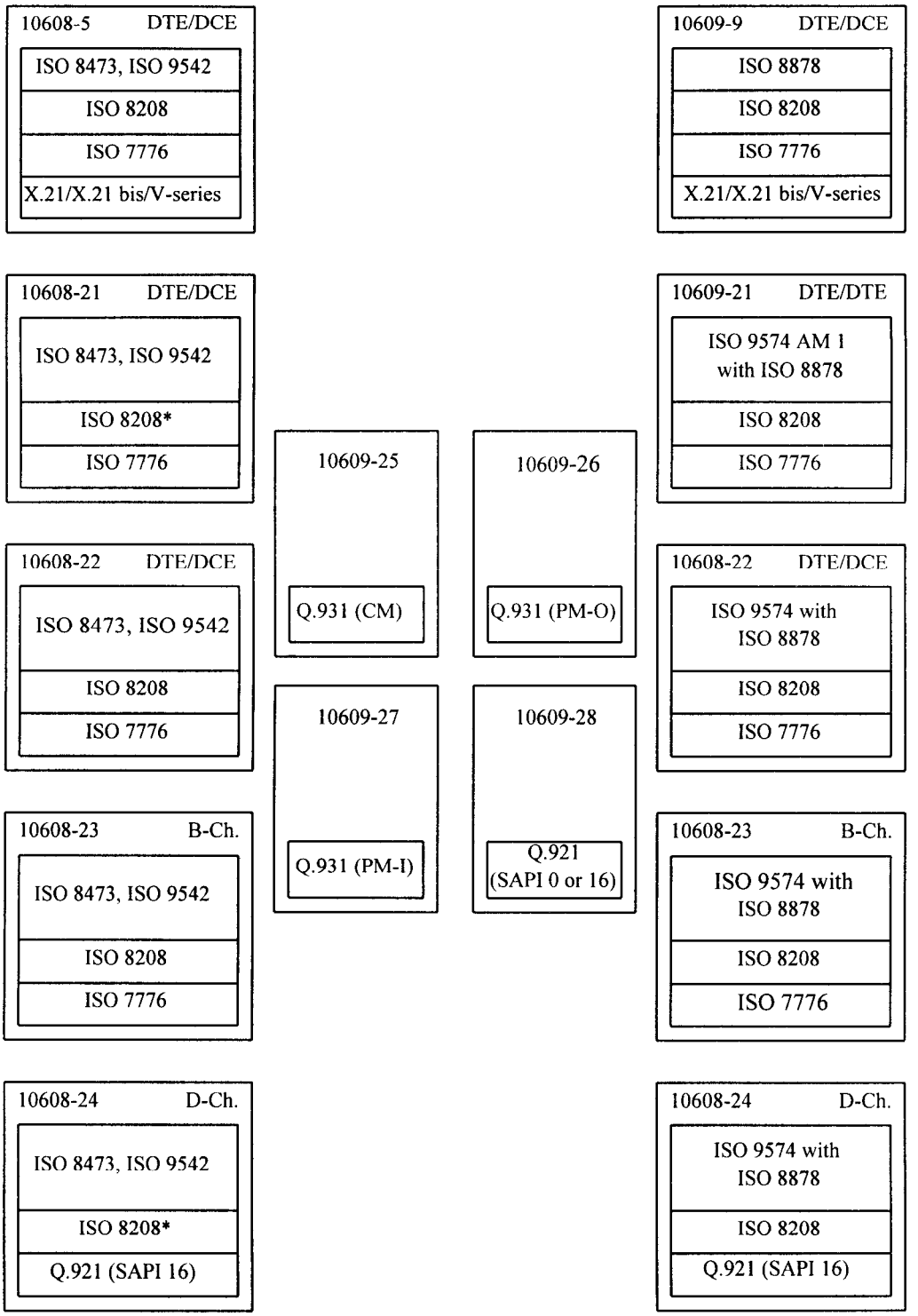

* It is for further study whether ISO 8208 is applicable in this protocol stack.

Figure 3-2 - Multi-part OSI/ISDN T-profile structure, common parts

Copyright International Organization for Standardization
Provided by IHS under license with ISO
No reproduction or networking permitted without license from IHS
Not for Resale

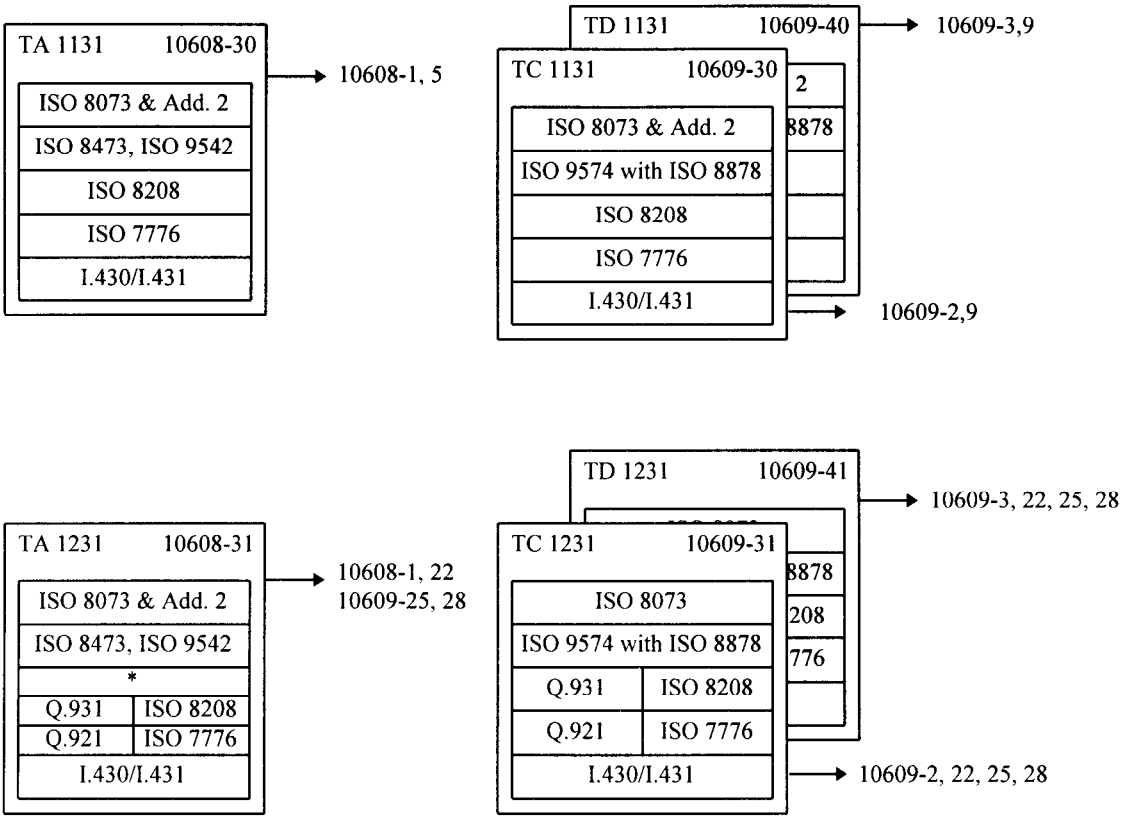

* The functionality to allow ISO 8473 to operate over ISO 8208/Q.931 in an ISDN environment still must be defined.

Figure 3-3 - Multi-part OSI/ISDN T-profile structure, X.31 Case A DTE/DCE profiles

Copyright International Organization for Standardization
Provided by IHS under license with ISO
No reproduction or networking permitted without license from IHS
Not for Resale

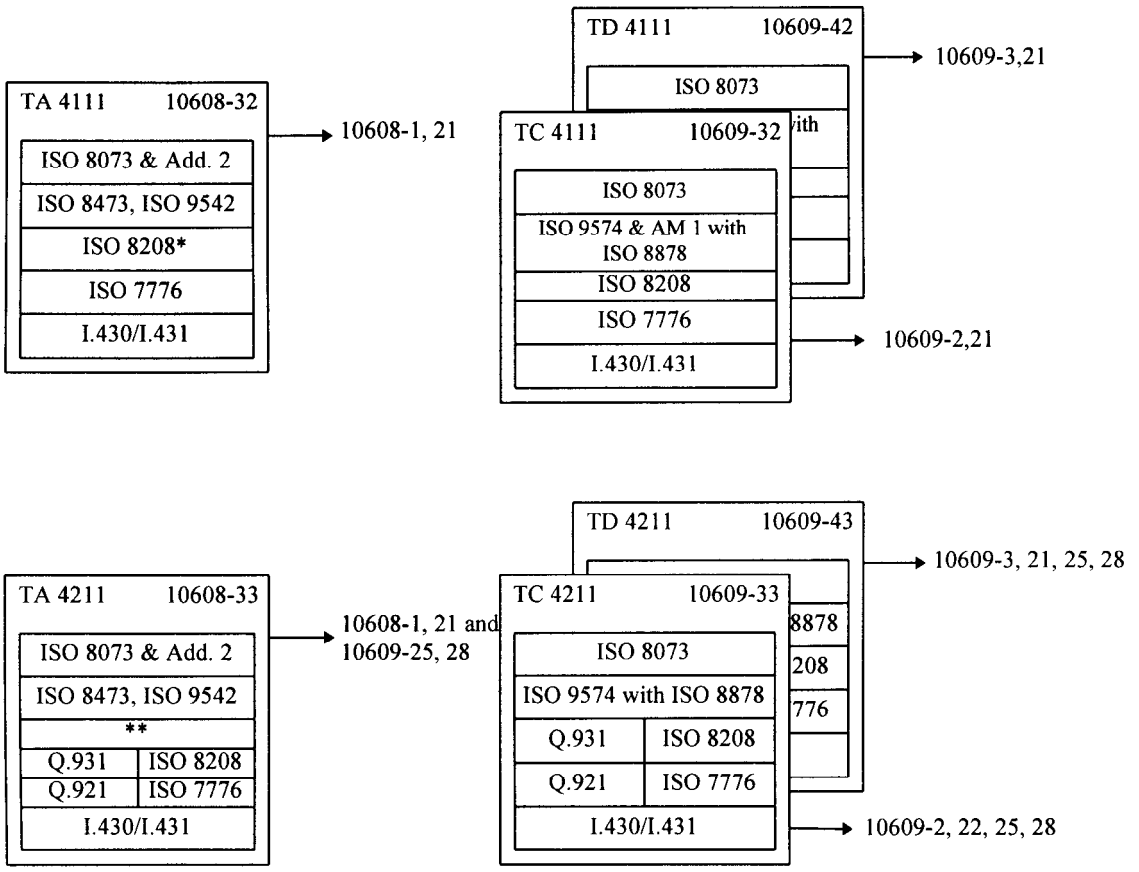

* It is for further study whether ISO 8208 is applicable in this protocol stack.
** The functionality to allow ISO 8473 to operate over ISO 8208/Q.931 in an ISDN environment still must be defined.

Figure 3-4 - Multi-part OSI/ISDN T-profile structure, DTE/DTE profiles

Copyright International Organization for Standardization
Provided by IHS under license with ISO
No reproduction or networking permitted without license from IHS
Not for Resale

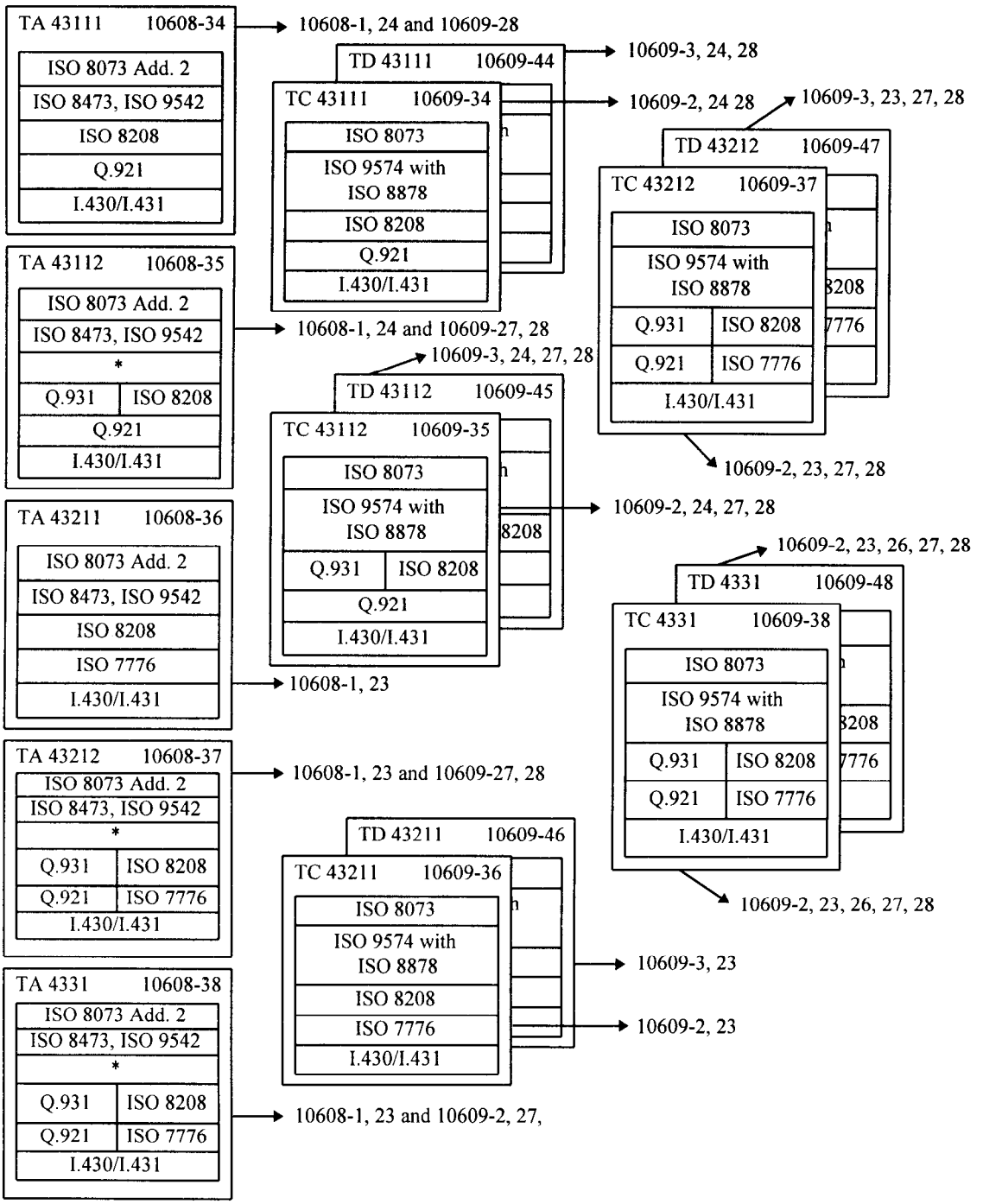

* The functionality to allow ISO 8473 to operate over ISO 8208/Q.931 in an ISDN environment still must be defined.

Figure 3-5 - Multi-part OSI/ISDN T-profile structure, X.31 Case B DTE/DCE Profiles

By looking at the stack or the individual protocol that is specified in a profile and matching it with the stack or the individual protocol in a common part, the common parts that are applicable to that particular profile can easily be derived. The common parts that are applicable to a particular profile are shown by an arrow in figures 3-3, 3-4 and 3-5. Figure 4, for example, also shows the details of the applicable protocols which provide the required CONS mapping function.

Copyright International Organization for Standardization
Provided by IHS under license with ISO
No reproduction or networking permitted without license from IHS
Not for Resale

Consider for example, the Tx 4111 profile (x = D) for identifying the common parts applicable to this profile. Using figure 3-2, the common part ISO/IEC ISP 10609-21 can be identified as the applicable common part which specifies layer 2 and layer 3 protocols. I.430/I.431 is the Physical Layer protocol and ISO/IEC 8073 is the Transport Layer protocol for all the OSI/ISDN T-profiles.

5.2 B and D-channel protocol stacks

Table 1 listed the seven ISPs corresponding to the access scenarios illustrated in figure 1. The protocol stack up to the Network Layer that is applicable for a particular ISDN-OSI T-profile can easily be recognized by the common part numbers that are identified in the B and D-channel sub-columns in the table. The stack of protocols that is used on a particular channel for a particular scenario is indicated by YES in the table and is identified by the common ISP part number. For example, in the case of B-channel demand access to a remote DTE (Tx 4211), the Q.931 signaling protocol is used on the D-channel to establish a B-channel and protocols ISO/IEC 8208 and ISO 7776 are used in layers 3 and 2, respectively, on the B-channel in the DTE/DTE mode.

Figure 4 shows detailed protocol stacks applicable to the seven access scenarios shown in figure 1. Figure 4 also identifies the class of the Transport Layer protocol used (i.e., classes 0, 2 and 4) and the type of OSI Network Service (i.e., CONS or CLNS) provided and the necessary mapping function. Each of the access scenarios in table 1 can be used in conjunction with TA, TC or TD profiles. The distinction between the TA profile and the TC and TD profiles is shown in figure 4 also. The distinction between TC and TD profiles is the class(es) of Transport Layer protocol used.

Figure 4 shows, below the dashed line, the B and D-channel protocols constrained by ISDN in the Network Layer and below. For example, in the case of B-channel permanent access to PH in ISDN (i.e., Tx 43211 or Tx 43212 rows), a "YES" appears in the D-channel "Q.931 PM-IN" column and also in the B-channel DTE/DCE sub-column of table 1. The stack of protocols for the D-channel will be Q.931 in layer 3 and LAPD in layer 2; the stack of protocols for the B-channel will be ISO/IEC 8208 (DTE/DCE mode) in layer 3 and ISO 7776 (DTE/DCE mode) in layer 2.

5.3 Architectural simplicity of the multi-part OSI/ISDN T-profile structure

The important message that is conveyed by the generalized architectural structure described in this subclause is that all the seven scenarios can be simply represented by table 1 and that the ISDN profiles corresponding to the various access configurations differ architecturally only in a small way. In other words, the multi-part structure described for the various access scenarios differ fundamentally in the following aspects:

1. the channel, i.e. B or D-channel;
2. use of Q.931 for channel setup and call offering;
3. when using a B-channel, whether it is setup on demand or established permanently.

Copyright International Organization for Standardization
Provided by IHS under license with ISO
No reproduction or networking permitted without license from IHS Not for Resale

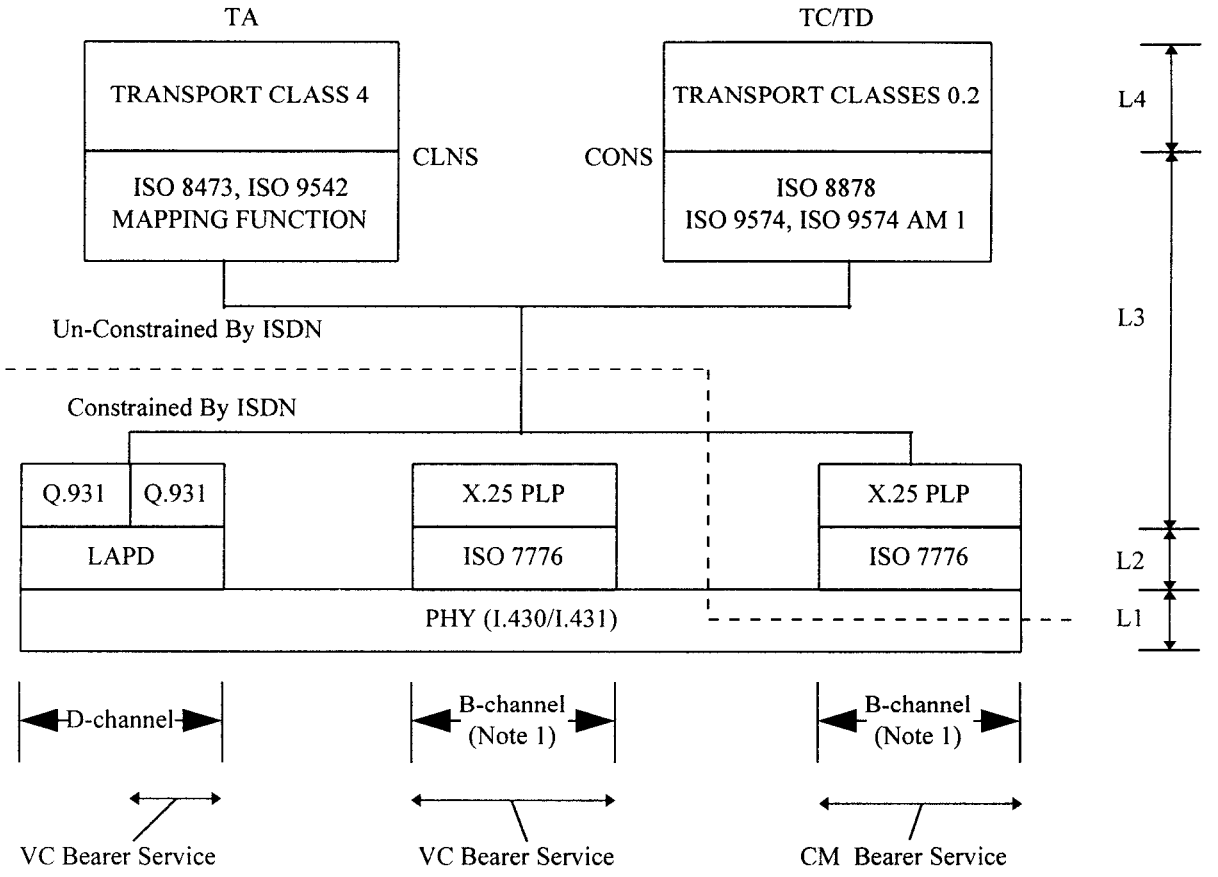

NOTE 1 - A B-channel can either be a demand or a permanent access channel.

Figure 4 - Protocol stack template for the Tx profiles

Using table 1, the following are some observations regarding protocol implementation for a particular scenario:

1. There is no difference in implementing Q.931 procedures on the D-channel for setting up any B-channel in the two circuit-switched bearer service scenarios, namely
   - B-channel demand access to AU in PSPDN (row 2 of table 1) and
   - B-channel demand access to a remote DTE (row 4 of table 1).

2. There is no difference in the data transfer phase of a B-channel using X.25 PLP and ISO 7776 between the two Case A circuit-switched bearer service scenarios, namely
   - B-channel permanent access to AU in PSPDN (row 1 of table 1) and
   - B-channel demand access to AU in PSPDN (row 2 of table 1)

   except for the X.32 aspects of accessing the network.

3. There is no difference in the data transfer phase between the two B-channel virtual circuit bearer service scenarios, namely
   - B-channel permanent access to PH in ISDN (rows 7 and 8 of table 1) and
   - B-channel demand access to PH in ISDN (row 9 of table 1).

Copyright International Organization for Standardization
Provided by IHS under license with ISO
No reproduction or networking permitted without license from IHS
Not for Resale

In general, the choice of the requested bearer service will be made by the appropriate coding of the bearer capability and, in Case A demand access scenario, the ISDN address of the PSPDN port will be introduced as the destination in the Q.931 message while in Case B no address is included.

Copyright International Organization for Standardization
Provided by IHS under license with ISO
No reproduction or networking permitted without license from IHS Not for Resale

Annex A
(informative)

Channel selection through call offering

One difference from a DTE viewpoint among the seven access scenarios in figure 1 is the use of the signaling protocol Q.931 for the B-channel setup and its use in channel selection through call offering. The concept of call offering and notification classes applies to both X.31 access to PSPDN services (Case A, Tx 1231) and X.31 virtual circuit bearer service (Case B) access scenarios. There are three notification classes in terms of Q.931 procedures. They are No-notification, Conditional notification and Un-conditional notification classes[2]. This Annex explores the relationship between call offering procedures and notification classes.

Table 2 illustrates the relationship between notification classes, the network-proposed channel and allowable user response. There are seven possible channel indications for network call offerings, each with allowable user response. However, the applicability of a particular channel indication offered by the network depends on the user's notification class subscription. The first three columns of table 2 indicate the network-proposed channels (network-to-user direction). The next three columns indicate whether the channel offering is applicable to each of the notification classes. The seventh column represents the allowable user response (user-to-network direction). The channel indication (Bi or No Channel) in the setup message can be either exclusive or preferred relative to B-channels. Channel indication as exclusive in the setup message implies an allowable user response only for that Bi channel. If the channel indicated in the setup message is a preferred channel, the allowable user responses can be any one of the Bi, Bi', Bj or D channels. As an example, consider the case where the user subscribes to the conditional notification class and the network sends a SETUP message indicating Bi-channel exclusive and no D-channel indication, then the allowable user response can be "Bi" as indicated in the first row of table 2.

[2] See Rec. Q.931 for detailed definitions of notification classes.

Copyright International Organization for Standardization
Provided by IHS under license with ISO
No reproduction or networking permitted without license from IHS
Not for Resale

Table 2 - Relation between notification classes, network requested channel and user response (incoming access from PH in ISDN - X.31 Case B)

Channel indication in the SETUP Message: Network-to-User Direction			Applicability of offering in columns 1 - 3 to NC			Allowable User Responses User-to-Network Direction
Information Channel selection	Preferred or Exclusive	D-channel indicator	NO	COND	Un-COND	
Bi	Exclusive	No	N/A	YES	YES	Bi
Bi	Exclusive	Yes	N/A	YES	YES	Bi, D
Bi	Preferred	No	N/A	YES	YES	Bi, Bi', Bj
Bi	Preferred	Yes	N/A	YES	YES	Bi, Bi', Bj, D
No Channel	Preferred	No	N/A	N/A	YES	Bj
No Channel	Preferred	Yes	N/A	N/A	YES	Bj, D
No Channel	Exclusive	Yes	N/A	N/A	YES	D

NOTE - No other encodings of channel selection are allowed.

Bi => indicated (idle) B-channel
Bi' => Any other idle B-channel (not permitted in response to broadcast call offering)
Bj => An established B-channel under the user's control (a permanent B-channel may be indicated if the user subscribes to the un-conditional notification class)
D => D-channel
N/A => Not Applicable
NC => Notification class
NO => No notification class
COND => Conditional notification class
Un-COND => Un-Conditional notification class

Table 3 illustrates the relationship between notification classes, the network-proposed channel and allowable user response in the case of incoming access from an AU.

Table 3 - Relation between notification classes, network requested channel and user response (incoming access to AU in PSPDN - ISDN X.31 Case A)

Channel indication in the SETUP Message: Network-to-User Direction (Note 1)			Applicability of offering in columns 1 - 3 to NC			Allowable User Responses User-to-Network Direction
Information Channel selection	Preferred or Exclusive	D-channel indicator	NO	COND	Un-COND	
Bi	Exclusive	No	N/A	YES	N/A	Bi
Bi	Exclusive	No	N/A	YES	N/A	Bi, Bi' (Note 2)

NOTE 1 - No other encodings of channel selection are allowed.
NOTE 2 - This encoding is not used for broadcast call offering.

Bi => indicated (idle) B-channel
Bi' => Any other idle B-channel (not permitted in response to broadcast call offering)
N/A => Not Applicable
NC => Notification class
NO => No notification class
COND => Conditional notification class
Un-COND => Un-Conditional notification class

Copyright International Organization for Standardization
Provided by IHS under license with ISO
No reproduction or networking permitted without license from IHS Not for Resale

The network proposed channel and the allowable user response are correlated to the notification classes as explained below.

- In the case of subscribing to the no notification class:
  - The network allocates X.25 incoming calls to a B or D channel using a network implemented algorithm. As such, the network does not use Q.931 at all. Tables 2 and 3 are not applicable. (This is indicated by "N/A" in all rows of the no notification class ("NO") column.)

- In the case of subscribing to the conditional notification class:

  - A network offers the call using Q.931 procedures to activate a channel for the delivery of an incoming X.25 call only when there is no available channel in the active state. Subsequent incoming X.25 calls to the same ISDN number are delivered over this channel without using Q.931 procedures.

  - The network offers a call using only the channels indicated in the first four rows of table 2 or both rows of table 3. (This is indicated by "YES" in the corresponding rows of the conditional notification class ("COND") column.)

- Lastly, in the case of subscribing to the un-conditional notification class:

  - A network offers the call using the Q.931 call offering procedures.

  - All B and D channel offerings indicated in all rows of tables 2 and 3 are available to the network. (This is indicated by "YES" in all rows of the un-conditional notification class ("Un-COND") column.)

Copyright International Organization for Standardization
Provided by IHS under license with ISO
No reproduction or networking permitted without license from IHS Not for Resale

Annex B
(informative)

Titles of profiles and all ISP parts referenced in the OSI/ISDN T-profiles

ISO/IEC ISP #	Title
ISP 10609-2: 1992,	*Information technology - International Standardized Profiles TB, TC, TD, and TE - Connection-mode Transport Service over connection-mode Network Service - Part 2: Subnetwork-type independent requirements for Group TC.*
ISP 10609-3: 1992,	*Information technology - International Standardized Profiles TB, TC, TD, and TE - Connection-mode Transport Service over connection-mode Network Service - Part 3: Subnetwork-type independent requirements for Group TD.*
ISP 10609-9: 1992,	*Information technology - International Standardized Profiles TB, TC, TD, and TE - Connection-mode Transport Service over connection-mode Network Service - Part 9: Subnetwork-type dependent requirements for Network Layer, Data Link Layer and Physical Layer concerning permanent access to a packet switched data network using virtual calls.*
ISP 10609-20: 1995,	*Information technology - International Standardized Profiles TB, TC, TD, and TE - Connection-mode Transport Service over connection-mode Network Service - Part 20: Overview of the generalized multi-part ISP structure for TC and TD Group profiles for OSI usage of ISDN.*
ISP 10609-21: 1995,	*Information technology - International Standardized Profiles TB, TC, TD, and TE - Connection-mode Transport Service over connection-mode Network Service - Part 21: Subnetwork-type dependent requirements for Network Layer and Data Link Layer for ISDN B-channel X.25 DTE to DTE operation.*
ISP 10609-22: 1995,	*Information technology - International Standardized Profiles TB, TC, TD, and TE - Connection-mode Transport Service over connection-mode Network Service - Part 22: Subnetwork-type dependent requirements for Network Layer and Data Link Layer for ISDN B-channel X.25 DTE to DCE operation.*
ISP 10609-23: 1995,	*Information technology - International Standardized Profiles TB, TC, TD, and TE - Connection-mode Transport Service over connection-mode Network Service - Part 23: Subnetwork-type dependent requirements for Network Layer and Data Link Layer for Data Transfer concerning a packet switched mode Integrated Services Digital Network using virtual calls: B-channel access-case.*
ISP 10609-24: 1995,	*Information technology - International Standardized Profiles TB, TC, TD, and TE - Connection-mode Transport Service over connection-mode Network Service - Part 24: Subnetwork-type dependent requirements for Network Layer and Data Link Layer for Data Transfer concerning a packet switched mode Integrated Services Digital Network using virtual calls: D-channel access-case.*
ISP 10609-25: 1995,	*Information technology - International Standardized Profiles TB, TC, TD, and TE - Connection-mode Transport Service over connection-mode Network Service - Part 25: Subnetwork-type dependent requirements for Q.931 circuit-switched operation.*

Copyright International Organization for Standardization
Provided by IHS under license with ISO
No reproduction or networking permitted without license from IHS
Not for Resale

ISP 10609-26: 1995, *Information technology - International Standardized Profiles TB, TC, TD, and TE - Connection-mode Transport Service over connection-mode Network Service - Part 26: Subnetwork-type dependent requirements for Network Layer for Call Control procedures concerning the outgoing call of a packet switched mode Integrated Services Digital Network in case B using virtual calls.*

ISP 10609-27: 1995, *Information technology - International Standardized Profiles TB, TC, TD, and TE - Connection-mode Transport Service over connection-mode Network Service - Part 27: Subnetwork-type dependent requirements for Network Layer for Call Control procedures concerning the incoming call of a packet switched mode Integrated Services Digital Network in case B using virtual calls.*

ISP 10609-28: 1995, *Information technology - International Standardized Profiles TB, TC, TD, and TE - Connection-mode Transport Service over connection-mode Network Service - Part 28: Subnetwork-type dependent requirements for Data Link Layer for end systems attached to an ISDN subnetwork.*

ISP 10609-30: 1995, *Information technology - International Standardized Profiles TB, TC, TD, and TE - Connection-mode Transport Service over connection-mode Network Service - Part 30: Definition of profile TC1131.*

ISP 10609-31: 1995, *Information technology - International Standardized Profiles TB, TC, TD, and TE - Connection-mode Transport Service over connection-mode Network Service - Part 31: Definition of profile TC1231.*

ISP 10609-32: 1995, *Information technology - International Standardized Profiles TB, TC, TD, and TE - Connection-mode Transport Service over connection-mode Network Service - Part 32: Definition of profile TC4111.*

ISP 10609-33: 1995, *Information technology - International Standardized Profiles TB, TC, TD, and TE - Connection-mode Transport Service over connection-mode Network Service - Part 33: Definition of profile TC4211.*

ISP 10609-34: 1995, *Information technology - International Standardized Profiles TB, TC, TD, and TE - Connection-mode Transport Service over connection-mode Network Service - Part 34: Definition of profile TC43111.*

ISP 10609-35: 1995, *Information technology - International Standardized Profiles TB, TC, TD, and TE - Connection-mode Transport Service over connection-mode Network Service - Part 35: Definition of profile TC43112.*

ISP 10609-36: 1995, *Information technology - International Standardized Profiles TB, TC, TD, and TE - Connection-mode Transport Service over connection-mode Network Service - Part 36: Definition of profile TC43211.*

ISP 10609-37: 1995, *Information technology - International Standardized Profiles TB, TC, TD, and TE - Connection-mode Transport Service over connection-mode Network Service - Part 37: Definition of profile TC43212.*

ISP 10609-38: 1995, *Information technology - International Standardized Profiles TB, TC, TD, and TE - Connection-mode Transport Service over connection-mode Network Service - Part 38: Definition of profile TC4331.*

Copyright International Organization for Standardization
Provided by IHS under license with ISO
No reproduction or networking permitted without license from IHS
Not for Resale

ISP 10609-40: 1995, *Information technology - International Standardized Profiles TB, TC, TD, and TE - Connection-mode Transport Service over connection-mode Network Service - Part 40: Definition of profile TD1131.*

ISP 10609-41: 1995, *Information technology - International Standardized Profiles TB, TC, TD, and TE - Connection-mode Transport Service over connection-mode Network Service - Part 41: Definition of profile TD1231.*

ISP 10609-42: 1995, *Information technology - International Standardized Profiles TB, TC, TD, and TE - Connection-mode Transport Service over connection-mode Network Service - Part 42: Definition of profile TD4111.*

ISP 10609-43: 1995, *Information technology - International Standardized Profiles TB, TC, TD, and TE - Connection-mode Transport Service over connection-mode Network Service - Part 43: Definition of profile TD4211.*

ISP 10609-44: 1995, *Information technology - International Standardized Profiles TB, TC, TD, and TE - Connection-mode Transport Service over connection-mode Network Service - Part 44: Definition of profile TD43111.*

ISP 10609-45: 1995, *Information technology - International Standardized Profiles TB, TC, TD, and TE - Connection-mode Transport Service over connection-mode Network Service - Part 45: Definition of profile TD43112.*

ISP 10609-46: 1995, *Information technology - International Standardized Profiles TB, TC, TD, and TE - Connection-mode Transport Service over connection-mode Network Service - Part 46: Definition of profile TD43211.*

ISP 10609-47: 1995, *Information technology - International Standardized Profiles TB, TC, TD, and TE - Connection-mode Transport Service over connection-mode Network Service - Part 47: Definition of profile TD43212.*

ISP 10609-48: 1995, *Information technology - International Standardized Profiles TB, TC, TD, and TE - Connection-mode Transport Service over connection-mode Network Service - Part 48: Definition of profile TD 4331.*

Copyright International Organization for Standardization
Provided by IHS under license with ISO
No reproduction or networking permitted without license from IHS
Not for Resale

© ISO/IEC

ICS 35.100

Descriptors: data processing, information interchange, network interconnection, open systems interconnection, data transmission, connection oriented transmission, services, ISDN, profiles, overviews.

Price based on 20 pages

Copyright International Organization for Standardization
Provided by IHS under license with ISO
No reproduction or networking permitted without license from IHS

Not for Resale