INTERNATIONAL STANDARDIZED PROFILE

ISO/IEC ISP 10608-6

First edition
1995-06-15

Information technology — International Standardized Profile TAnnnn — Connection-mode Transport Service over Connectionless-mode Network Service —

Part 6:
Definition of profile TA54, operation over an FDDI LAN subnetwork

Technologies de l'information — Profil normalisé international TAnnnn — Service de transport en mode connexion sur service de réseau en mode sans connexion —

Partie 6: Definition du profil TA54 pour opération sur un sous-réseau FDDI RLE

Reference number
ISO/IEC ISP 10608-6:1995(E)

Copyright International Organization for Standardization
Provided by IHS under license with ISO
No reproduction or networking permitted without license from IHS

Not for Resale

Contents

Page

Foreword ... iii

Introduction ... v

1 Scope ... 1
1.1 General ... 1
1.2 Position in the taxonomy ... 1
1.3 Scenario ... 1

2 Normative references ... 2

3 Definitions ... 3

4 Abbreviations ... 3

5 Requirements ... 4
5.1 Transport layer ... 4
5.2 Network layer ... 4
5.3 Logical Link Control Sublayer (LLC) ... 5
5.4 Medium Access Control sublayer (MAC) ... 6
5.5 Physical sublayer (PHY) ... 6
5.6 Physical Media Dependent sublayer (PMD) ... 6
5.7 Station Management (SMT) ... 6

Annex A: ISPICS requirements list (normative) ... 7
A.1 General options of the profile ... 7
A.2 Standards selected and combined in the profile ... 7
A.3 Requirements on base standards ... 7

© ISO/IEC 1995
All rights reserved. Unless otherwise specified, no part of this publication may be reproduced or utilized in any form or by any means, electronic or mechanical, including photocopying and microfilm, without permission in writing from the publisher.

ISO/IEC Copyright Office · Case postale 56 · CH-1211 Geneve · Switzerland

Printed in Switzerland

Copyright International Organization for Standardization
Provided by IHS under license with ISO
No reproduction or networking permitted without license from IHS
Not for Resale

Foreword

ISO (the International Organization for Standardization) and IEC (the International Electrotechnical Commission) form the specialized system for worldwide standardization. National bodies that are members of ISO or IEC participate in the development of International Standards through technical committees established by the respective organization to deal with particular fields of technical activity. ISO and IEC technical committees collaborate in fields of mutual interest. Other international organizations, governmental and non-governmental, in liaison with ISO and IEC, also take part in the work.

In the field of information technology, ISO and IEC have established a joint technical committee, ISO/IEC JTC 1. In addition to developing International Standards, ISO/IEC JTC 1 has created a Special Group on Functional Standardization for the elaboration of International Standardized Profiles.

An International Standardized Profile is an internationally agreed, harmonized document which identifies a standard or group of standards, together with options and parameters, necessary to accomplish a function or a set of functions.

Draft International Standardized Profiles are circulated to national bodies for voting. Publication as an International Standardized Profile requires approval by at least 75 % of the national bodies casting a vote.

International Standardized Profile ISO/IEC ISP 10608-6 was prepared with the collaboration of

- Asia-Oceania Workshop (AOW);

- European Workshop for Open Systems (EWOS);

- Open Systems Environment Implementors' Workshop (OIW).

ISO/IEC ISP 10608 consists of several parts, under the general title *Information technology - International Standardized Profile TAnnnn - Connection-mode Transport Service over Connectionless-mode Network Service:*

- *Part 1: General overview and subnetwork-independent requirements*

- *Part 2: TA51 profile including subnetwork-dependent requirements for CSMA/CD Local Area Networks (LANs)*

- *Part 4: Definition of profile TA53, operation over a Token Ring LAN subnetwork*

Copyright International Organization for Standardization
Provided by IHS under license with ISO
No reproduction or networking permitted without license from IHS
Not for Resale

- *Part 5: TA1111/TA1121 profiles including subnetwork-dependent requirements for X.25 packet-switched data networks using virtual calls*

- *Part 6: Definition of profile TA54, operation over an FDDI LAN subnetwork*

- *Part 13: MAC sublayer and physical layer dependent requirements for a Token Ring LAN subnetwork*

- *Part 14: MAC, PHY and PMD sublayer dependent and Station Management requirements over an FDDI LAN subnetwork*

Annex A forms an integral part of this part of ISO/IEC ISP 10608.

Copyright International Organization for Standardization
Provided by IHS under license with ISO
No reproduction or networking permitted without license from IHS
Not for Resale

Introduction

ISO/IEC ISP 10608 is defined in accordance with the principles specified by ISO/IEC TR 10000. The context of Functional Standardization is one area in the overall field of Information Technology (IT) standardization activities, covering base standards, profiles, and registration mechanisms. A profile defines a combination of base standards that collectively perform a specific well-defined IT function. Profiles standardize the use of options and other variations in the base standards, and provide a basis for the development of uniform, internationally recognized system tests.

ISPs are produced not simply to 'legitimize' a particular choice of base standards and options, but to promote real system interoperability. One of the most important roles for an ISP is to serve as the basis for the development (by organizations other than ISO and IEC) of internationally recognized test methods. The development and widespread acceptance of tests based on this and other ISPs is crucial to the successful realization of this goal.

ISO/IEC ISP 10608 consists of several parts, of which this is part 6. ISO/IEC ISP 10608-1 specifies the profile requirements which are independent of the subnetwork and media. There are further parts which specify subnetwork-dependent and media-dependent requirements. In addition, for each individual profile, there is a part of ISO/IEC ISP 10608 which identifies the specific requirements of that profile, making reference to appropriate material from part 1 and from the subnetwork-dependent parts.

Copyright International Organization for Standardization
Provided by IHS under license with ISO
No reproduction or networking permitted without license from IHS
Not for Resale

This page is intentionally left blank.

Copyright International Organization for Standardization
Provided by IHS under license with ISO
No reproduction or networking permitted without license from IHS Not for Resale

Information technology — International Standardized Profile TAnnnn — Connection-mode Transport Service over Connectionless-mode Network Service —

Part 6:
Definition of profile TA54, operation over an FDDI LAN subnetwork

1 Scope

1.1 General

ISO/IEC ISP 10608 is applicable to end systems concerned with operating in the Open Systems Interconnection (OSI) environment. It specifies a combination of OSI base standards that collectively provide the connection-mode Transport Service using the connectionless-mode Network Service.

This part of ISO/IEC ISP 10608 is applicable to the provision of the connection-mode Transport Service in end systems attached to an FDDI LAN subnetwork from which the standardized connectionless-mode Network Service can be made available.

1.2 Position within the taxonomy

The taxonomy of OSI profiles is defined in ISO/IEC TR 10000-2. This part of ISO/IEC ISP 10608 defines the profile:

TA54: Connection-mode transport service over connectionless-mode network service over an FDDI LAN subnetwork.

1.3 Scenario

Figure 1 illustrates the end system configurations to which this part of ISO/IEC ISP 10608 is applicable.

Copyright International Organization for Standardization
Provided by IHS under license with ISO
No reproduction or networking permitted without license from IHS
Not for Resale

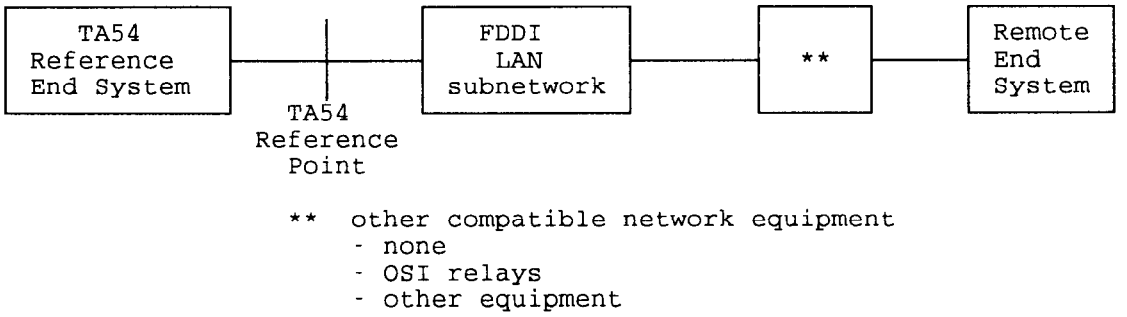

Figure 1 - Scenario of applicability of the TA54 profile

This part of ISO/IEC ISP 10608 specifies the required functions from the supporting protocol stack shown in figure 2.

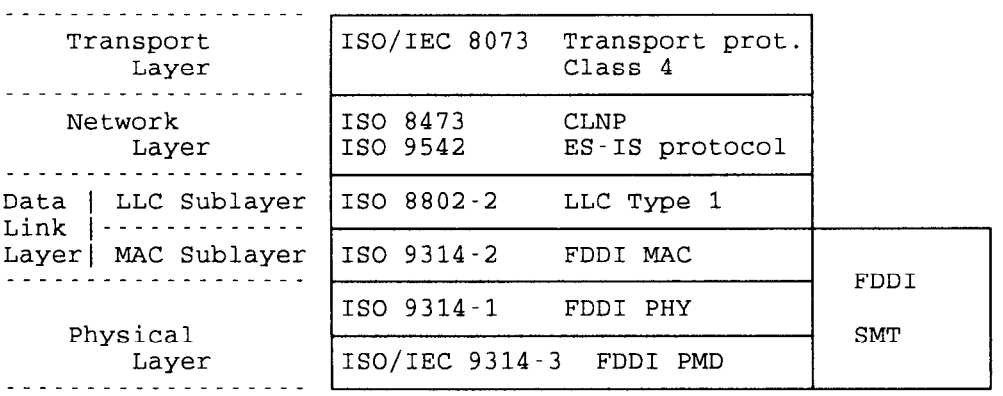

Figure 2 - TA54 protocol stack for end systems

2 Normative references

The following documents contain provisions which, through reference in this text, constitute provisions of this part of ISO/IEC ISP 10608. At the time of publication, the editions indicated were valid. All documents are subject to revision, and parties to agreements based on this part of ISO/IEC ISP 10608 are warned against automatically applying any more recent editions of the documents listed below, since the nature of references made by ISPs to such documents is that they may be specific to a particular edition. Members of IEC and ISO maintain registers of currently valid International Standards and ISPs, and ITU-T maintains published editions of its current Recommendations.

ISO 8473:1988, *Information processing systems - Data communications - Protocol for providing the connectionless-mode network service.*

ISO 8802-2:1989, *Information processing systems - Local area networks - Part 2: Logical link control.*

Copyright International Organization for Standardization
Provided by IHS under license with ISO
No reproduction or networking permitted without license from IHS
Not for Resale

ISO 9542:1988, *Information processing systems - Telecommunications and information exchange between systems - End system to Intermediate system routeing exchange protocol for use in conjunction with the Protocol for providing the connectionless-mode network service (ISO 8473).*

ISO 9542:1988/Corr. 1:-[1], *Information processing systems - Telecommunications and information exchange between systems - End System to Intermediate System routeing exchange protocol for use in conjunction with the Protocol for the providing the connectionless-mode network service (ISO 8473) - Technical Corrigendum 1.*

ISO/IEC TR 9577:1993, *Information technology - Telecommunications and information exchange between systems - Protocol identification in the network layer.*

ISO/IEC TR 10000-1:1992, *Information technology - Framework and taxonomy of International Standardized Profiles - Part 1: Framework.*

ISO/IEC TR 10000-2:1994, *Information technology - Framework and taxonomy of International Standardized Profiles - Part 2: Principles and Taxonomy for OSI Profiles.*

ISO/IEC 10039:1991, *Information technology - Open Systems Interconnection - Local area networks - Medium Access Control (MAC) service definition.*

ISO/IEC ISP 10608-1:1992, *Information technology - International Standardized Profile TAnnnn - Connection-mode Transport Service over Connectionless-mode Network Service - Part 1: General overview and subnetwork-independent requirements.*

ISO/IEC ISP 10608-2:1992, *Information technology - International Standardized Profile TAnnnn - Connection-mode Transport Service over Connectionless-mode Network Service - Part 2: TA51 profile including subnetwork-dependent requirements for CSMA/CD Local Area Networks (LANs).*

ISO/IEC ISP 10608-14:1995, *Information technology - International Standardized Profile TAnnnn - Connection-mode Transport Service over Connectionless-mode Network Service - Part 14: MAC, PHY and PMD sublayer dependent and Station Management requirements over an FDDI LAN subnetwork.*

ISO/IEC TR 10735:1993, *Information technology - Telecommunications and information exchange between systems - Standard Group MAC Addresses.*

3 Definitions

All the terms used in this part of ISO/IEC ISP 10608 are defined in the documents that are referenced in clause 2.

4 Abbreviations

All abbreviations, including acronyms, are used in this part of ISO/IEC ISP 10608 as defined in the documents that are referenced in clause 2.

1) To be published

Copyright International Organization for Standardization
Provided by IHS under license with ISO
No reproduction or networking permitted without license from IHS Not for Resale

5 Requirements

5.1 Transport layer

The requirements for the transport layer shall be as specified in ISO/IEC ISP 10608-1, subclause 5.2. No additional requirements are applicable for the use of the transport protocol over an FDDI LAN subnetwork.

5.2 Network layer

The requirements for the network layer shall be as specified in ISO/IEC ISP 10608-1, subclause 5.3.

The following additional requirements are applicable for operation of the ES-IS protocol (ISO 9542) over an FDDI LAN subnetwork.

5.2.1 Network layer requirements for the ES-IS protocol

The IPRL for the ES-IS protocol is defined in clause A.3, item (c), of this part of ISO/IEC ISP 10608. The requirements listed below apply to the ES-IS protocol when used in conjunction with an FDDI LAN subnetwork.

5.2.1.1 ES-IS addresses

The LSAP address used with ISO 9542 shall be the same as the LSAP address used with ISO 8473 (see subclause 5.3.1 below)

ISO 9542 defines two logical group addresses that are used to identify the group of all end systems and the group of all intermediate systems attached to a given network. The actual value and representation of these addresses are subnetwork specific, and are not specified by ISO 9542.

The hexadecimal representation of these FDDI MAC group addresses, using the encoding of ISO/IEC 10039, shall be as follows:

09-00-2B-00-00-04 All End System Network Entities multicast address

09-00-2B-00-00-05 All Intermediate System Network Entities multicast address

5.2.1.2 ES-IS functions

Both the Configuration Information function and the Redirect Information function shall be supported when ISO 9542 is used in conjunction with the profile defined in this part of ISO/IEC ISP 10608.

Copyright International Organization for Standardization
Provided by IHS under license with ISO
No reproduction or networking permitted without license from IHS Not for Resale

5.2.1.3 Additional requirements for the ES-IS protocol

Implementations may optionally support the Configuration Notification function described in ISO 9542, subclause 6.7, for system initialization. If supported, an implementation shall provide the ability to enable or disable this function. If supported in end systems listening to both ISH PDUs and ESH PDUs, this function shall only be invoked upon receipt of an ISH PDU.

5.2.1.4 Parameters of the ES-IS protocol

The initial values of the following parameters shall be configurable:

Holding Time
Configuration Time

5.2.1.5 SNPA Address

An implementation shall use, as the BSNPA field of Redirect PDUs (RD), the MAC address corresponding to the subnetwork point of attachment which it is desired to identify. The octets of the BSNPA field shall correspond to the octets of the MAC address in accordance with the hexadecimal representation described in ISO/IEC 10039.

5.2.2 Maximum transmitted LLC-PDU size

An implementation that conforms to this part of ISO/IEC ISP 10608 shall be capable of restricting the maximum transmitted LLC PDU size to:

a) 1500 octets if the TA54 reference end system is communicating, through a MAC sublayer bridge, over an ISO/IEC 8802-3 CSMA/CD LAN subnetwork;

b) 4399 octets if the TA54 reference end system is communicating, through a MAC sublayer bridge, over an ISO/IEC 8802-5 Token Ring LAN subnetwork at 4 Mbps data rate.

5.3 Logical Link Control Sublayer (LLC)

The detailed LLC requirements for the profile defined in this part of ISO/IEC ISP 10608 are specified in ISO/IEC ISP 10608-2, annex B.

In addition, the requirements specified in subclauses 5.3.1 and 5.3.2 below are applicable.

5.3.1 Link Service Access Point (LSAP)

The LSAP value **0111 1111**, in which the left-most bit is the Least Significant Bit (LSB), shall be used in all cases in order to allow Network Layer protocol discrimination to be performed in accordance with ISO/IEC TR 9577. This value is represented according to the convention established in ISO 8802-2 as hexadecimal "**FE**".

Copyright International Organization for Standardization
Provided by IHS under license with ISO
No reproduction or networking permitted without license from IHS
Not for Resale

5.3.2 LLC type

Only Type 1 operation, providing an unacknowledged connectionless-mode service, is applicable.

5.4 Medium Access Control sublayer (MAC)

The requirements for the Medium Access Control sublayer shall be as specified in ISO/IEC ISP 10608-14, subclauses 5.1 and 5.2.

5.5 Physical sublayer (PHY)

The requirements for the physical sublayer shall be as specified in ISO/IEC ISP 10608-14, subclause 5.3.

5.6 Physical Media Dependent sublayer (PMD)

The requirements for the Physical Media Dependent sublayer shall be as specified in ISO/IEC ISP 10608-14, subclause 5.4.

5.7 Station Management (SMT)

The requirements for the Station Management shall be as specified in ISO/IEC ISP 10608-14, subclause 5.5.

Copyright International Organization for Standardization
Provided by IHS under license with ISO
No reproduction or networking permitted without license from IHS Not for Resale

Annex A
(normative)

ISPICS requirements list

A.1 General options of the profile

There are no general options in this profile.

A.2 Base standards selected and combined in the profile

This profile makes use of the following base standards:

- ISO/IEC 8073
- ISO 8473
- ISO 9542
- ISO 8802-2
- ISO 9314-1
- ISO 9314-2
- ISO/IEC 9314-3

A.3 Constraints on base standards

An implementation that conforms to this part of ISO/IEC ISP 10608 shall:

a) meet all subnetwork-type independent constraints on operation of ISO/IEC 8073 as specified in the ISPICS requirements list in ISO/IEC ISP 10608-1, clause A.2;

b) meet all subnetwork-type dependent, media-independent constraints on the operation of ISO 8473 as specified in the ISPICS requirements list in ISO/IEC ISP 10608-1, clause C.2;

c) meet the following requirements of ISO 9542. These constraints are specified in terms of protocol functions and PDU fields identified in the end system tables of ISO 9542, annex A. The notation and conventions used in this subclause are defined in ISO/IEC ISP 10608-1, clause A.2:

Base item	Protocol function	Constraint
CI	Is configuration information supported	m
RI	Is redirection information supported	m

Copyright International Organization for Standardization
Provided by IHS under license with ISO
No reproduction or networking permitted without license from IHS Not for Resale

Base item	PDU field	Constraint
Scty-s	<s> Security	i
Scty-r	<r> Security	i
Pty-s	<s> Priority	i
Pty-r	<r> Priority	i
QoSM-r	<r> QoS maintenance	i
AdMk-r	<r> Address Mask	i
SNMk-r	<r> SNPA Mask	i

d) meet all subnetwork-type dependent, media independent constraints on the operation of ISO 8802-2 as specified in the ISPICS requirements list in ISO/IEC ISP 10608-2, annex B;

e) meet all FDDI subnetwork-type dependent constraints on the operation of ISO/IEC 9314, as specified in the ISPICS requirements list in ISO/IEC 10608-14, annex A.

Copyright International Organization for Standardization
Provided by IHS under license with ISO
No reproduction or networking permitted without license from IHS Not for Resale

© ISO/IEC

ICS 35.100

Descriptors: data processing, information interchange, network interconnection, open systems interconnection, local area networks, transport layer, network layer, data transmission, communication procedure, control procedures, profiles.

Price based on 8 pages

Copyright International Organization for Standardization
Provided by IHS under license with ISO
No reproduction or networking permitted without license from IHS

Not for Resale