STD.ISO ISP 10608-5-ENGL 1998 ■ 4851903 0753702 119 ■

INTERNATIONAL STANDARDIZED PROFILE

ISO/IEC ISP 10608-5

First edition
1992-12-15

AMENDMENT 1
1998-07-15

Information technology — International Standardized Profile TAnnnn — Connection-mode Transport Service over Connectionless-mode Network Service —

Part 5:

TA1111/TA1121 profiles including subnetwork-dependent requirements for X.25 packet-switched data networks using virtual calls

AMENDMENT 1: Reference Optional Security Requirements Specific to X.25 Subnetworks — TA11n1

Technologies de l'information — Profil normalisé international TAnnnn — Service de transport en mode connexion sur le service de réseau en mode sans connexion —

Partie 5: Profils TA1111/TA1121 avec les spécifications dépendant du sous-réseau pour les réseaux à commutation de paquets utilisant des circuits virtuels commutés

AMENDEMENT 1: Spécifications de sécurité optionnelles de référence spécifiques aux sous-réseaux X.25 — TA11n1

This material is reproduced from ISO documents under International Organization for Standardization (ISO) Copyright License number IHS/ICC/1996. Not for resale. No part of these ISO documents may be reproduced in any form, electronic retrieval system or otherwise, except as allowed in the copyright law of the country of use, or with the prior written consent of ISO (Case postale 56, 1211 Geneva 20, Switzerland, Fax +41 22 734 10 79), IHS or the ISO Licensor's members.

Reference number
ISO/IEC ISP 10608-5:1992/Amd.1:1998(E)

Copyright International Organization for Standardization
Provided by IHS under license with ISO
No reproduction or networking permitted without license from IHS

Not for Resale

Foreword

ISO (the International Organization for Standardization) and IEC (the International Electrotechnical Commission) form the specialized system for worldwide standardization. National bodies that are members of ISO or IEC participate in the development of International Standards through technical committees established by the respective organization to deal with particular fields of technical activity. ISO and IEC technical committees collaborate in fields of mutual interest. Other international organizations, governmental and non-governmental, in liaison with ISO and IEC, also take part in the work.

In the field of information technology, ISO and IEC have established a joint technical committee, ISO/IEC JTC 1. In addition to developing International Standards, ISO/IEC JTC 1 has created a Special Group on Functional Standardization for the elaboration of International Standardized Profiles.

An International Standardized Profile is an internationally agreed, harmonized document which identifies a standard or group of standards, together with options and parameters, necessary to accomplish a function or a set of functions.

Draft International Standardized Profiles are circulated to national bodies for voting. Publication as an International Standardized Profile requires approval by at least 75 % of the national bodies casting a vote.

Amendment 1 to ISO/IEC ISP 10608-5:1992 was prepared with the collaboration of

— Asia-Oceania Workshop (AOW);

— European Workshop for Open Systems (EWOS);

— Open Systems Environment Implementors' Workshop (OIW).

© ISO/IEC 1998

All rights reserved. Unless otherwise specified, no part of this publication may be reproduced or utilized in any form or by any means, electronic or mechanical, including photocopying and microfilm, without permission in writing from the publisher.

ISO/IEC Copyright Office • Case postale 56 • CH-1211 Genève 20 • Switzerland

Printed in Switzerland

Copyright International Organization for Standardization
Provided by IHS under license with ISO
No reproduction or networking permitted without license from IHS

Not for Resale

© ISO/IEC

Information technology — International Standardized Profile TAnnnn — Connection-mode Transport Service over Connectionless-mode Network Service —

Part 5:

TA1111/TA1121 profiles including subnetwork-dependent requirements for X.25 packet-switched data networks using virtual calls

AMENDMENT 1: Reference Optional Security Requirements Specific to X.25 Subnetworks - TA11n1

Add new Clause:

6 Location of Optional Security Requirements

Additional requirements are specified in subsequent parts of ISO/IEC ISP 10608 for the provision of security services (e.g. confidentiality, integrity, authentication) with the communications services provided by profiles using X.25 subnetworks. The provision of these security requirements is optional.

Optional requirements for provision of security services in a manner that is specific to X.25 packet switched networks using virtual calls are specified in:

ISO/IEC ISP 10608-8: [1], *Information technology -- International Standardized Profile Tannn -- Connection-mode Transport service over Connectionless-mode Network Service --Part 8: Security employing the Network Layer Security Protocol - Connection-mode with SDT-PDU based protection over X.25 packet switched data networks using virtual calls, for TA1111 / TA1121 profiles*

Note: An alternative set of security profile requirements, that are applicable to profiles employing any subnetwork but which potentially provides less protection (in particular, less protection against replay attacks), is specified in:

ISO/IEC ISP 10608-7: [1], *Information technology -- International Standardized Profile Tannn -- Connection-mode Transport service over Connectionless-mode Network Service --Part 7: Security employing the Network Layer Security Protocol - Connectionless mode, for TAnnn profiles*

This part is referenced normatively from Part 1 of ISO/IEC ISP 10608.

[1] To be published

Copyright International Organization for Standardization
Provided by IHS under license with ISO
No reproduction or networking permitted without license from IHS
Not for Resale

© ISO/IEC

ICS 35.100.05

Descriptors: data processing, information interchange, network interconnection, open systems interconnection, data transmission, services, profiles.

Price based on 1 page

Copyright International Organization for Standardization
Provided by IHS under license with ISO
No reproduction or networking permitted without license from IHS

Not for Resale

ISP10608 PT*5 92 ■ 4851903 0523802 597 ■

INTERNATIONAL STANDARDIZED PROFILE

ISO/IEC ISP 10608-5

First edition
1992-12-15

Information technology — International Standardized Profile TAnnnn — Connection-mode Transport Service over Connectionless-mode Network Service —

Part 5:

TA1111/TA1121 profiles including subnetwork-dependent requirements for X.25 packet-switched data networks using virtual calls

Technologies de l'information — Profil normalisé international TAnnnn — Service de transport en mode connexion sur le service de réseau en mode sans connexion —

Partie 5: Profils TA1111/TA1121 avec les spécifications dépendant du sous-réseau pour les réseaux à commutation de paquets utilisant des circuits virtuels commutés

Reference number
ISO/IEC ISP 10608-5:1992(E)

Copyright International Organization for Standardization
Provided by IHS under license with ISO
No reproduction or networking permitted without license from IHS
Not for Resale

Contents

Foreword iii

Introduction iv

1 Scope 1

2 Normative References 2

3 Definitions 2

4 Abbreviations 2

5 Profiles TA11n1 - X.25 subnetworks 2

Annexes

A SNDCF IPRL 4

B ES-IS protocol IPRL 7

C Bibliography 8

© ISO/IEC 1992
All rights reserved. No part of this publication may be reproduced or utilized in any form or by any means, electronic or mechanical, including photocopying and microfilm, without permission in writing from the publisher.

ISO/IEC Copyright Office • Case Postale 56 • CH-1211 Genève 20 • Switzerland

Printed in Switzerland

Copyright International Organization for Standardization
Provided by IHS under license with ISO
No reproduction or networking permitted without license from IHS

Not for Resale

Foreword

ISO (the International Organization for Standardization) and IEC (the International Electrotechnical Commission) form the specialized system for worldwide standardization. National bodies that are members of ISO or IEC participate in the development of International Standards through technical committees established by the respective organization to deal with particular fields of technical activity. ISO and IEC technical committees collaborate in fields of mutual interest. Other international organizations, governmental and non-governmental, in liaison with ISO and IEC, also take part in the work.

In the field of information technology, ISO and IEC have established a joint technical committee, ISO/IEC JTC 1. In addition to developing International Standards, ISO/IEC JTC 1 has created a Special Group on Functional Standardization for the elaboration of International Standardized Profiles.

An International Standardized Profile is an internationally agreed, harmonized document which identifies a standard or group of standards, together with options and parameters, necessary to accomplish a function or set of functions.

Draft International Standardized Profiles are circulated to national bodies for voting. Publication as an International Standardized Profile requires approval by at least 75 % of the national bodies casting a vote.

International Standardized Profile ISO/IEC ISP 10608-5 was prepared with the collaboration of

— OSI Asia-Oceania Workshop (AOW);

— European Workshop for Open Systems (EWOS);

— OSI Implementors Workshop (OIW).

ISO/IEC ISP 10608 consists of the following parts, under the general title *Information technology — International Standardized Profile TAnnnn — Connection-mode Transport Service over Connectionless-mode Network Service*:

— *Part 1: General overview and subnetwork-independent requirements*

— *Part 2: TA51 profile including subnetwork-dependent requirements for CSMA/CD Local Area Networks (LANs)*

— *Part 4: Definition of profile TA53 for operation over a Token Ring LAN subnetwork*

— *Part 5: TA1111/TA1121 profiles including subnetwork-dependent requirements for X.25 packet-switched data networks using vrtual calls*

— *Part 13: MAC sublayer and physical layer dependent requirements for Token Ring local area network*

Annexes A and B form an integral part of this part of ISO/IEC ISP 10608. Annex C is for information only.

Copyright International Organization for Standardization
Provided by IHS under license with ISO
No reproduction or networking permitted without license from IHS
Not for Resale

Introduction

This part of ISO/IEC ISP 10608 (International Standardized Profile) is defined within the context of Functional Standardization, in accordance with the principles specified by ISO/TR 10000-1:1990. The context of Functional Standardization is one part of the overall field of Information Technology (IT) standardization activities, covering base standards, profiles, and registration mechanisms. A profile defines a combination of base standards that collectively perform a specific well-defined IT function. Profiles standardize the use of options and other variations in the base standards, and provide a basis for the development of uniform, internationally recognized system tests.

One of the most important roles for an ISP is to serve as the basis for the development (by organizations other than ISO and IEC) of internationally recognized tests and test centers. ISPs are produced not simply to legitimize a particular choice of base standards and options, but to promote real system interoperability. The development and widespread acceptance of tests based on this and other ISPs is crucial to the successful realization of this goal.

ISO/IEC ISP 10608 consists of several parts, of which this is Part 5. ISO/IEC 10608-1 specifies subnetwork-type independent requirements for Group TA profiles. ISO/IEC 10608-2 specifies subnetwork-type dependent requirements for Profile TA51. ISO/IEC ISP 10608-3 specifies subnetwork-type dependent requirements for Profile TA52. ISO/IEC ISP 10608-4 specifies subnetwork-type dependent requirements for Profile TA53. ISO/IEC ISP 10608-5 specifies subnetwork-type dependent requirements for Profiles TA1111 and TA1121.

Copyright International Organization for Standardization
Provided by IHS under license with ISO
No reproduction or networking permitted without license from IHS
Not for Resale

Information technology - International Standardized Profile TAnnnn - Connection-mode Transport Service over Connectionless-mode Network Service - Part 5: TA1111 / TA1121 profiles including subnetwork-type dependent requirements for X.25 packet-switched data networks using virtual calls

1 Scope

1.1 General

This part of ISO/IEC ISP 10608 specifies subnetwork-type dependent requirements for end system operation when the end system is attached to an X.25 packet-switched data network by a dedicated (permanent) access line and using switched virtual calls. The Directory of Profiles and ISPs in ISO/IEC TR10000 identifies this TA profile configuration as TA1111 or TA1121. The complete set of requirements for TA11n1 consists of the requirements specified in ISO/IEC ISP10608-1 and ISO/IEC ISP 10608-5.

1.2 Position of profile within the taxonomy

ISO/IEC ISP 10608-5 covers the taxonomy elements identified as "TA" in the *Directory of Profiles and ISPs* contained in ISO/IEC TR 10000-2. These elements constitute Transport profiles, group A: Connection-mode Transport Service over Connectionless-mode Network Service.

This clause specifies requirements for the profile identified in ISO/IEC TR 10000 as TA11n1, Connection-mode Transport Service provided over the Connectionless-mode Network Service through dedicated (permanent) access to an X.25 packet-switched data network using virtual calls.

Figure 1 (below) illustrates the standards which comprise the TA1111 and TA1121 profiles.

Transport Layer	ISO 8073	ISO 8073/Add.2
Network Layer	ISO 8473	ISO 9542
	ISO 8208	
Data-link Layer	ISO 7776	
Physical Layer	X.25 dedicated access via PSTN	

Transport Layer	ISO 8073	ISO 8073/Add.2
Network Layer	ISO 8473	ISO 9542
	ISO 8208	
Data-link Layer	ISO 7776	
Physical Layer	X.25 dedicated access via digital data circuit	

Figure 1 - Standards comprising the TA1111 and TA1121 Profiles

1.3 Scenario

Figure 2 illustrates the configuration of systems to which TA11n1 is applicable.

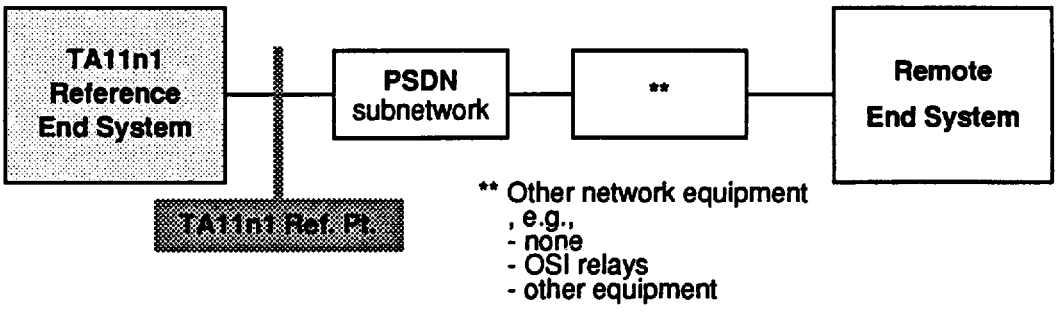

Figure 2 - Scenario of applicability of the TA11n1 Profiles

Copyright International Organization for Standardization
Provided by IHS under license with ISO
No reproduction or networking permitted without license from IHS
Not for Resale

2 Normative references

The following documents contain provisions which, through reference in this text, constitute provisions of ISO/IEC ISP 10608-1. At the time of publication, the editions indicated were valid. All documents are subject to revision, and parties to agreements based on this International Standardized Profile are warned against automatically applying any more recent editions of the documents listed below, since the nature of references made by ISPs to such documents, is that they may be specific to a particular edition. Members of IEC and ISO maintain registers of currently valid International Standards and ISPs, and the CCITT maintains published editions of its current Recommendations.

ISO/IEC 8208:1990, *Information technology - Data communications - X.25 Packet Level Protocol for Data Terminal Equipment.*

(See also CCITT Recommendation X.25 - 1988).

ISO/IEC 8208/Amd.3:1991, *Information technology - Data communications - X.25 Packet Level Protocol for Data Terminal Equipment - Amendment 3: Conformance requirements.*

ISO 8473: 1988, *Information processing systems - Data communications - Protocol for providing the connectionless-mode network service.*

ISO 9542:1988, *Information processing systems - Telecommunications and information exchange between systems - End system to intermediate system routeing exchange protocol for use in conjunction with the Protocol for providing of the connectionless-mode Network Service (ISO 8473).*

ISO/IEC ISP10608-1:1992, *Informationtechnology - International Standardized Profile TAnnnn - Connection-mode Transport Service over Connectionless-mode Network Service - Part 1: general overview and Subnetwork-type independent requirements.*

ISO/IEC ISP10609-9:1992, *Information technology - International Standardized Profile TB, TC, TD, TE - Connection-mode Transport Service over connection-mode Network Service - Part 9: Subnetwork-type dependent requiremments for Network Layer, Data-link Layer and Physical Layer concerning permanent access to a packet-switched data network using virtual calls.*

3 Definitions

All of the terms used in this part of ISO/IEC ISP 10608 are defined either in the referenced base standards (see clause 2) or in the International Standards listed in annex C.

4 Abbreviations

All of the abbreviations and acronyms used in this part of ISO/IEC ISP 10608 are defined either in the referenced base standards (see clause 2) or in the International Standards listed in annex C.

5 Profile TA11n1 - X.25 subnetworks

5.1 Subnetwork-type independent requirements

The requirements for the transport protocol are as specified in ISO/IEC ISP 10608-1.

The requirements for the connectionless-mode network protocol are as specified in ISO/IEC ISP 10608-1.

5.2 Subnetwork-type dependent requirements

This clause specifies additional subnetwork-type dependent requirements for end system operation when the end system is attached by a dedicated (permanent) access line to an X.25 packet-switched data network and is using switched virtual circuits. The subnetwork-type specific requirements concern both the way in which specific subnetwork services are provided by individual real subnetworks and the way in which those specific subnetwork services are used to provide the *underlying service* assumed by ISO 8473.

5.2.1 Network layer requirements

This profile specifies the use of the X.25 packet layer protocol defined by ISO/IEC 8208. The way in which ISO/IEC 8208 is used to provide the *underlying service* assumed by ISO 8473 is specified in ISO 8473 itself.

Copyright International Organization for Standardization
Provided by IHS under license with ISO
No reproduction or networking permitted without license from IHS
Not for Resale

NOTE: The X.25 packet layer protocol provides a subnetwork service from which the ISO connection-mode network service can be constructed according to ISO 8878. ISO/IEC ISP 10608-5 does not specify the use of ISO 8878 to construct the ISO connection-mode service. The operation of ISO 8473 when ISO 8208 is used is defined as a subnetwork convergence function (SNDCF) within ISO 8473 itself.

5.2.1.1 SNDCF requirements

ISO 8473 defines the operation of an SNDCF when ISO 8473 is operated over ISO 8208. The IPRL for the SNDCF is given in annex A.

The first octet of the Call User Data field of the Call Request packet shall be set to the value that indicates that the virtual circuit is to be used to provide the underlying service assumed by ISO 8473. This value is defined as binary 1000 0001 (hexadecimal 81).

The optional timer function described in clause 8.4.3.4 of ISO 8473 which detects inactivity on a virtual circuit, should be reset whenever there is packet traffic in either direction. If it is supported, this timer's initial value should be configurable.

The implementation shall not transmit segments with a length greater than 16k (16384) octets.

5.2.1.2 X.25 packet layer protocol

The requirements for the X.25 packet layer protocol are given in ISO/IEC 8208 Amd.3, except for those requirements listed in annex A, clause A.4.2.

5.2.1.3 ES-IS protocol support requirements

Currently, use of a statically configured routing information base is the only available method for accomplishing the ES-IS configuration function. It is recommended that the Route Redirect Information subset of ISO 9542 should be supported.

If Route Redirection is supported, then the SNPA in RD PDUs shall be interpreted as an X.25 DTE address, the digits being encoded as binary coded decimal numbers in successive semi-octets, with an additional semi-octet with all bits set to 1 at the end if the address is an odd number of digits. The IPRL for this protocol is defined in annex B.

5.2.2 Data-link layer requirements

ISO/IEC ISP 10608-5 specifies the use of a dedicated (permanent) circuit connecting the end system (X.25 DTE) to a public or private packet-switched data network. The specifications given in ISO/ISP 10609-9 for the data-link layer are to be used for this profile. The IPRL from that document is to be used for the data-link layer IPRL for this profile.

5.2.3 Physical layer requirements

The specifications given in ISO/ISP 10609-9 for the physical layer are to be used for this profile. The IPRL from that document is to be used for the physical layer IPRL for this profile.

Copyright International Organization for Standardization
Provided by IHS under license with ISO
No reproduction or networking permitted without license from IHS
Not for Resale

Annex A

(normative)

International Standardized Profile Implementation Conformance Statement Requirements List (IPRL)

A.1 Introduction

The IPRL in this annex specifies the additional requirements for ISO 8473. The requirements of ISO 8473 apply to each item for which there is no entry in this IPRL. The SNDCF is a set of functions necessary for operation of ISO 8473 over a PSDN.

A conforming implementation shall satisfy the mandatory conformance requirements of the base standard referenced in this part of the profile.

A.2 Notation

The following tables define the functions supported for which conformance is claimed, using the following keys.

a) Base standard status notation

1) base standard type or range

M	; Mandatory.
O	; Optional.
O.<n>	; Optional, but support of at least one of the group of options labeled by the same numeral <n> is required.
pred:	; this predicate symbol means that the status or support following it applies only when the PICS states that one or more of the items identified by <Items> is supported. In the simplest case, <Items> is the identifying tag of a single PICS item; <Items> may also be a list of such tags separated by commas, or may indicate a group of related items.
pred::	; this group predicate symbol applies to the status of each of the items that follows, until another such group predicate occurs on a different line, or until the next horizontal rule separating a group of items.

b) IPRL status notation

The Status column of Profile features entries use a one character or a two character notation. A one character notation indicates the static requirements only. If a two character notation is used, the first character is the static requirement and the second character is the dynamic requirement.

1) static

m	; Mandatory (implementation is mandatory).
o	; Optional (implementation is optional).
i	; Out of scope (not relevant to this profile).

2) dynamic

m	; Mandatory (use is mandatory).

Copyright International Organization for Standardization
Provided by IHS under license with ISO
No reproduction or networking permitted without license from IHS
Not for Resale

A.3 SNDCF IPRL

NOTE: This IPRL includes an interim version of the PICS proforma. When a standardized PICS proforma is published, this IPRL will refer to it.

A.3.1 Supported functions - Interim PICS proforma

Base Standard Features				Profile Features	
Index	Protocol mechanism	Reference	Status	ISP Reference	Status
	Functions:				
	Protocol discrimination	8.4.3.3	M		&
	Collision resolution	8.4.3.5	M		&
	Multiple VC usage	8.4.3.6	O		&
	Priority	8.4.3.7	O		i
	VC timers		O		&

A.4 X.25 Subnetwork IPRL

A.4.1 General

The PICS proforma contained in ISO 8208/AMD.3, Annex B, for the X.25 packet level protocol can be used for the purposes of this profile.

A.4.2 Supported functions

A.4.2.1 Protocol features

Base Standard Features				Profile Features	
Item	Protocol Feature	Reference	Status	ISP Reference	Status
	Service:				
Vp	- PVC		O.1		i
Vs	- VC		O.1		mm
	Environment:	3, 3.2			
Et/t	- DTE/DTE in fixed role as DTE		O.2		i
Et/c	- DTE/DTE in fixed role as DCE		Vs:O.2		Vs:i
Et/d	- DTE/DTE with dynamic role selection	4.5	Vs:O.2		Vs:i

A.4.2.2 VC Service

Base Standard Features				Profile Features	
Item	VC Service only: Call Setup	Reference	Status	ISP Reference	Status
S1c	Are outgoing VCs supported: - non-Fast-Select?	5.2.4	O		m
S2c	Are incoming VCs supported: - non-Fast-Select, acceptance poss.?	5.2.3	O		m

&: same as base standard

Copyright International Organization for Standardization
Provided by IHS under license with ISO
No reproduction or networking permitted without license from IHS
Not for Resale

A.4.2.3 Call Clearing

Base Standard Features				Profile Features	
Item	VC Service only: Call Clearing	Reference	Status	ISP Reference	Status
	Is call clearing supported as:	5.5.4, fig. 5D	Vs::		
C1	- response to indication of clearing?	5.5.2	O		m
C2a	- aborting an outgoing VC attempt?	5.4,5.5.1,5.5.3	O		m
C2c	- originating clearing of an established VC?	5.5.1,5.5.3	O		m

A.4.2.4 Normal Data Transfer and Flow Control

Base Standard Features				Profile Features	
Item	Normal Data Transfer and Flow Control	Reference	Status	ISP Reference	Status
	Are the following supported?				
DS1	Sending DATA packets	6, 6.1,6.2,7.1.1, 7.1.2, 7.1.3, 12.3.1	O		m
DS2	- Send-window rotation on receiving updated P(R) values	7.1, 7.1.2, 7.1.3	O		m
DS4b	- Sending M = 1 in DATA packets	6.4, 6.5, 6.7	O		m
DS5a	- Sending Q = 0 in DATA packets	6.6	O.10		m

Base Standard Features				Profile Features	
Item	Normal Data Transfer and Flow Control	Reference	Status	ISP Reference	Status
	Are the following supported?				
DR1	Receiving DATA packets	6, 6.1,6.2,7.1.1, 7.1.2, 7.1.3, 12.3.1	O		m
DR2	- Receive-window rotation by sending updated P(R) values	7.1.2, 7.1.3	O		m
DR4b	- Receiving M = 1 in DATA packets	6.4, 6.5, 6.7	O		m
DR5a	- Receiving Q = 0 in DATA packets	6.6	O.11		m

A.4.2.5 Interrupt Transfer

Base Standard Features				Profile Features	
Item	Interrupt Transfer	Reference	Status	ISP Reference	Status
Is	Is sending interrupts supported? <s> Interrupt <r> Interrupt Confirmation	6.8, 6.8.1, 6.8.3, figure 5F, 12.3.2 12.3.3	O		i
Ir	Is receiving interrupts supported? <r> Interrupt <s> Interrupt Confirmation	6.8, 6.8.2, 6.8.3 figure 5F, 12.3.2 12.3.3	O		i

Copyright International Organization for Standardization
Provided by IHS under license with ISO
No reproduction or networking permitted without license from IHS
Not for Resale

Annex B

(normative)

International Standardized Profile Implementation Conformance Statement Requirements List (IPRL)

B.1 ES-IS protocol IPRL

B.1.1 General

The IPRL in this annex specifies the additional requirements for ISO 9542. These requirements are generated by applying the following modifications to the PICS proforma given in annex A of IS) 9542. This IPRL specifies an implementation of the ES-IS protocol for end systems. Intermediate system operation is not specified.

A conforming implementation shall satisfy the mandatory conformance requirements of the base standard referenced in this part of the profile.

B.1.2 Protocol functions

The protocol function Configuration Information (CI) is outside the scope of this profile.

B.1.3 Supported parameters

The following parameters for both send and receive are outside the scope of the profile defined in ISO/IEC ISP 10608-5.

Security

Priority

QoS maintenance

Address mask

SNPA mask

Copyright International Organization for Standardization
Provided by IHS under license with ISO
No reproduction or networking permitted without license from IHS

Not for Resale

Annex C
(informative)
Bibliography

This annex contains references to ISO standards that provide useful information beyond that which is available from the directly referenced standards identified in clause 2.

ISO 8648:1987, *Information processing systems - Open Systems Interconnection - Internal organization of the Network Layer.*

ISO 8878:1987, *Information processing systems - Data communications - Use of X.25 to provide the OSI connection-mode network service.*

ISO/IEC 8880-1:1990, *Information technology - Telecommunications and information exchange between systems - Protocol combinations to provide and support the OSI network service, Part1: General principles.*

ISO/IEC 8880-3:1988, *Information technology - Telecommunications and information exchange between systems - Protocol combinations to provide and support the OSI network service, Part 3: Provision and support of the connectionless-mode Network Service.*

ISO/IEC 8882-1:1991, *Information technology - Telecommunications and information exchange between systems - X.25 DTE conformance testing, Part 1: General principles.*

ISO/IEC 8882-2:1991, *Information technology - Telecommunications and information exchange between systems - X.25 DTE conformance testing, Part 2: Data-link layer test suite.*

ISO/IEC 8882-3:1991, *Information technology - Telecommunications and information exchange between systems - X.25 DTE conformance testing, Part 3: Packet level conformance test suite.*

ISO/IEC TR 9575:1990, *Information technology - Telecommunications and information exchange between systems - OSI Routeing Framework.*

ISO/IEC TR 9577:1990, *Information technology - Telecommunications and information exchange between systems - Protocol identification in the network layer.*

ISO/IEC 9646-1:1991, *Information technology - Open Systems Interconnection Conformance testing methodology and framework - Part 1: General concepts.*

ISO/IEC TR 10000-1:1990, *Information technology - Framework and taxonomy of International Standardized Profiles - Part 1: Framework.*

ISO/IEC TR 10000-2:1990, *Information technology - Framework and taxonomy of International Standardized Profiles - Part 2: Taxonomy of Profiles.*

Copyright International Organization for Standardization
Provided by IHS under license with ISO
No reproduction or networking permitted without license from IHS
Not for Resale

ISO/IEC ISP 10608-5:1992(E)

UDC 681.3:621.39

Descriptors: data processing, data processing, information interchange, information interchange, network interconnection, network interconnection, open systems interconnection, open systems interconnection, data transmission, data transmission, communication procedure, communication procedure, control procedures, control procedures, transport layer, network layer, profiles.

Price based on 8 pages

Copyright International Organization for Standardization
Provided by IHS under license with ISO
No reproduction or networking permitted without license from IHS
Not for Resale