INTERNATIONAL STANDARDIZED PROFILE

ISO/IEC ISP 10608-13

First edition
1994-05-15

Information technology — International Standardized Profile TAnnnn — Connection-mode Transport Service over Connectionless-mode Network Service —

Part 13:
MAC sublayer and physical layer dependent requirements for a Token Ring LAN subnetwork

Technologies de l'information — Profil normalisé international TAnnnn — Service de transport en mode connexion sur service de réseau en mode sans connexion —

Partie 13: Spécifications dépendantes de la sous-couche MAC et de la couche physique pour sous-réseau LAN en anneau à jeton

Reference number
ISO/IEC ISP 10608-13:1994(E)

Copyright International Organization for Standardization
Provided by IHS under license with ISO
No reproduction or networking permitted without license from IHS
Not for Resale

Contents

Page

Foreword iii

Introduction iv

1 Scope 1
1.1 General 1
1.2 Position within the Taxonomy 1
1.3 Scenario 1

2 Normative references 2

3 Definitions 2

4 Abbreviations 2

5 Requirements 3
5.1 MAC Sublayer Static Conformance Requirements 3
5.2 MAC Sublayer Dynamic Conformance Requirements 3
5.3 Requirements for the Physical Layer and Station Attachment 3

Annex A ISPICS Requirements List (normative) 4
A.1 Notation and Conventions 4
A.2 IPRL 5

Annex B Bibliography (informative) 8
B.1 Token Ring Cabling Practice 8

Annex C Defect Reports (informative) 9
C.1 List of Defect Reports 9

© ISO/IEC 1994
All rights reserved. Unless otherwise specified, no part of this publication may be reproduced or utilized in any form or by any means, electronic or mechanical, including photocopying and microfilm, without permission in writing from the publisher.

ISO/IEC Copyright Office • Case postale 56 • CH-1211 Genève • Switzerland

Printed in Switzerland

Copyright International Organization for Standardization
Provided by IHS under license with ISO
No reproduction or networking permitted without license from IHS
Not for Resale

Foreword

ISO (the International Organization for Standardization) and IEC (the International Electrotechnical Commission) form the specialized system for worldwide standardization. National bodies that are members of ISO or IEC participate in the development of International Standards through technical committees established by the respective organization to deal with particular fields of technical activity. ISO and IEC technical committees collaborate in fields of mutual interest. Other international organizations, governmental and non-governmental, in liaison with ISO and IEC, also take part in the work.

In the field of information technology, ISO and IEC have established a joint technical committee, ISO/IEC JTC1. In addition to developing International Standards, ISO/IEC JTC1 has created a Special Group on Functional Standardization for the elaboration of International Standardized Profiles.

An International Standardized Profile is an internationally agreed, harmonized document which identifies a standard or group of standards, together with options and parameters, necessary to accomplish a function or a set of functions.

Draft International Standardized Profiles are circulated to national bodies for voting. Publication as an International Standardized Profile requires approval by at least 75 % of the national bodies casting a vote.

International Standardized Profile ISO/IEC ISP 10608-13 was prepared with the collaboration of

- Asia-Oceania Workshop (AOW);
- European Workshop for Open Systems (EWOS);
- Open Systems Environment Implementors' Workshop (OIW).

ISO/IEC ISP 10608 consists of several parts, under the general title *Information Technology - International Standardized Profile TAnnnn - Connection-mode Transport Service over Connectionless-mode Network Service:*

- *Part 1: General overview and subnetwork-type independent requirements*
- *Part 2: TA51 profile including subnetwork-type dependent requirements for CSMA/CD Local Area Networks (LANs)*
- *Part 4: Definition of profile TA53, operation over a Token Ring LAN subnetwork*
- *Part 5: TA1111/TA1121 profiles including subnetwork-type dependent requirements for X.25 packet switched data networks using virtual calls*
- *Part 6: Definition of profile TA54 for operation over an FDDI LAN subnetwork*
- *Part 13: MAC sublayer and physical layer dependent requirements for a Token Ring LAN subnetwork*
- *Part 14: MAC, PHY and PMD sublayer dependent and Station Management requirements for an FDDI LAN subnetwork*

Annex A forms an integral part of this part of ISO/IEC 10608. Annexes B and C are for information only.

Copyright International Organization for Standardization
Provided by IHS under license with ISO
No reproduction or networking permitted without license from IHS
Not for Resale

Introduction

This International Standardized Profile (ISP) is defined in accordance with the principles specified by ISO/IEC Technical Report 10000.

The context of Functional Standardization is one area in the overall field of Information Technology (IT) standardization activities, covering base standards, profiles, and registration mechanisms. A profile defines a combination of base standards that collectively perform a specific well-defined IT function. Profiles standardize the use of options and other variations in the base standards, and provide a basis for the development of uniform, internationally recognized system tests.

ISPs are produced not simply to 'legitimize' a particular choice of base standards and options, but to promote real system interoperability. One of the most important roles for an ISP is to serve as the basis for the development (by organizations other than ISO and IEC) of internationally recognized tests. The development and widespread acceptance of tests based on this and other ISPs is crucial to the successful realization of this goal.

ISO/IEC ISP 10608 consists of several parts of which this is part 13. This part of ISO/IEC ISP 10608 specifies the LAN subnetwork dependent requirements for an End System or a Relay System attached to a Token Ring LAN subnetwork.

Other parts specify the subnetwork-type independent requirements (i.e. Transport Layer requirements), the LAN independent requirements for the Network Layer and the LLC Sublayer, the LAN specific requirements for various LAN subnetworks, or define particular End System profiles.

Copyright International Organization for Standardization
Provided by IHS under license with ISO
No reproduction or networking permitted without license from IHS Not for Resale

Information technology - International Standardized Profile TAnnnn - Connection-mode Transport Service over Connectionless-mode Network Service -

Part 13:
MAC sublayer and physical layer dependent requirements for a Token Ring LAN subnetwork

1 Scope

1.1 General

This part of ISO/IEC ISP 10608 is applicable to End Systems or Relay Systems operating over Token Ring LAN subnetworks in the Open Systems Interconnection (OSI) environment.

This part of ISO/IEC ISP 10608 specifies the subnetwork-type dependent requirements for the MAC Sublayer and the Physical Layer when the End System or Relay System is attached to a Token Ring LAN.

1.2 Position within the Taxonomy

This part of ISO/IEC ISP 10608 relates to any of the transport (Tx, Ux) or relay (Rx) profiles defined in ISO/IEC TR 10000-2, Taxonomy of OSI Profiles, where such profile uses subnetwork type 53 (Token Ring Local Area Network). Specifically, this part of ISO/IEC ISP 10608 provides a common set of requirements that are applicable to Transport Groups TA, TB, TC, TD, TE, UA, and UB, and to Relay Types RA, RB, RC, RD, RE, and RZ whenever subnetwork identifier 53 is associated with the transport group or relay type.

1.3 Scenario

The scope of ISPs derived from this part of ISO/IEC ISP 10608 is limited to the End System or Relay System characteristics using the Medium Interface Connector (MIC) as the reference point. Information relating to suitable media types and installation procedures for a Token Ring trunk cabling system may be found in the document referenced in the informative annex B to this part of ISO/IEC ISP 10608.

The scope of this part of ISO/IEC ISP 10608 and its relation to other documents and ISP parts is illustrated in figure 1.

Copyright International Organization for Standardization
Provided by IHS under license with ISO
No reproduction or networking permitted without license from IHS
Not for Resale

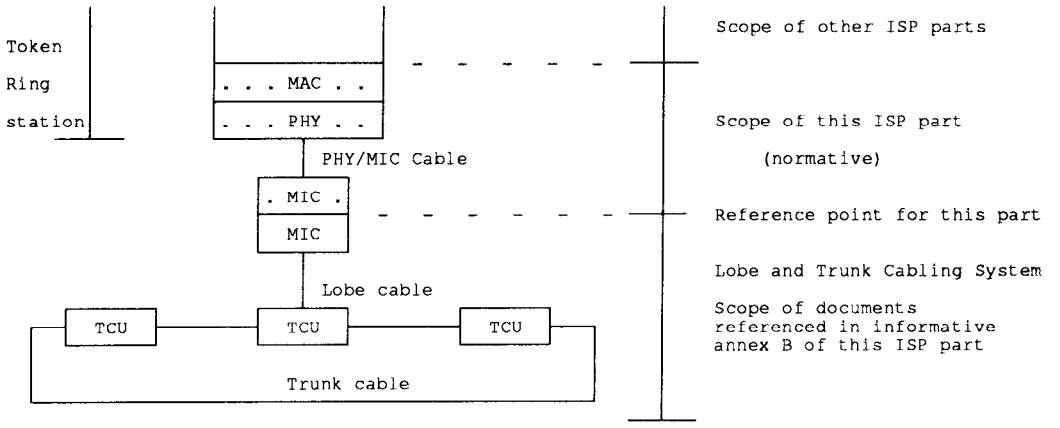

Figure 1 - Scope of this part of ISO/IEC ISP 10608

2 Normative references

The following documents contain provisions which, through reference in this text, constitute provisions of this part of ISO/IEC ISP 10608. At the time of publication, the editions indicated were valid. All documents are subject to revision, and parties to agreements based on this part of ISO/IEC ISP 10608 are warned against automatically applying any more recent editions of the documents listed below, since the nature of references made by ISPs to such documents is that they may be specific to a particular edition. Members of IEC and ISO maintain registers of currently valid International Standards and ISPs, and CCITT maintains published editions of its current Recommendations.

ISO/IEC 8802-5:1992, *Information technology - Local and Metropolitan Area Networks - Part 5: Token Ring Access Method and Physical Layer Specifications.*

ISO/IEC TR 10000-1:1992, *Information technology - Framework and taxonomy of International Standardized Profiles - Part 1: Framework.*

ISO/IEC TR 10000-2:1992, *Information technology - Framework and taxonomy of International Standardized Profiles - Part 2: Taxonomy of OSI Profiles.*

3 Definitions

All the terms used in this part of ISO/IEC ISP 10608 are defined in the base standards that are referenced in clause 2.

4 Abbreviations

All abbreviations, including acronyms, are used in this part of ISO/IEC ISP 10608 as defined in the base standards that are referenced in clause 2.

Copyright International Organization for Standardization
Provided by IHS under license with ISO
No reproduction or networking permitted without license from IHS
Not for Resale

5 Requirements

5.1 MAC Sublayer Static Conformance Requirements

An implementation that conforms to this part of ISO/IEC ISP 10608 shall meet the static conformance requirements for the MAC sublayer as defined in ISO/IEC 8802-5, subclause 1.5.1.1.

Use of the Early Token Release function (ISO/IEC 8802-5, subclause 4.1.10) is excluded at 4 Mbps ring operation and mandatory at 16 Mbps ring operation.

MAC addresses shall be 6 octets in length (48 bits). MAC address administration is outside the scope of this part of ISO/IEC ISP 10608.

An implementation shall be capable of transmitting and receiving frames that include a routeing information field (RI field).

NOTE - The MAC entity passes the RI field unchanged across the MAC service boundary in the same way as Destination and Source Addresses are transferred through use of service primitives.

An implementation shall be capable of receiving information fields (LLC-PDU) having a length up to 4399 octets at 4 Mbps Token Ring operation and up to 17749 octets at 16 Mbps Token Ring operation.

Additional requirements are found in annex A of this part of ISO/IEC ISP 10608.

5.2 MAC Sublayer Dynamic Conformance Requirements

An implementation that conforms to this part of ISO/IEC ISP 10608 shall meet the dynamic conformance requirements as defined in ISO/IEC 8802-5, subclause 1.5.2.

5.3 Requirements for the Physical Layer and Station Attachment

An implementation that conforms to this part of ISO/IEC ISP 10608 shall meet the static conformance requirements as defined in ISO/IEC 8802-5, subclause 1.5.1.2.

An implementation shall be capable of using both 4 and 16 Mbps data signalling rate (ISO/IEC 8802-5, subclause 5.3). The system shall be configurable to either rate.

Additional requirements are found in annex A of this part of ISO/IEC ISP 10608.

Token Ring trunk and lobe cabling systems are outside the scope of this part of ISO/IEC ISP 10608. Guidelines for planning and implementing cabling systems are provided in the publications listed in informative annex B of this part of ISO/IEC ISP 10608.

Requirements relating to reliability, safety and EMC are outside the scope of ISO/IEC ISP 10608.

Copyright International Organization for Standardization
Provided by IHS under license with ISO
No reproduction or networking permitted without license from IHS
Not for Resale

Annex A
(normative)

ISPICS Requirements List

The ISPICS Requirements List (IPRL) contained in this annex together with the requirements in the main body of this document constitutes the definitive specifications of requirements to conformance to profiles within the scope of this part of ISO/IEC ISP 10608.

Unless modified by the additional constraints in this annex, the requirements in the base standard PICS Proforma, ISO/IEC 8802-5, annex C, are applicable to implementations that conform to this part of ISO/IEC ISP 10608.

A.1 Notation and Conventions

Where appropriate, the ISP requirements are separated into a static part and a dynamic part. The static requirements indicate capabilities that have to be or are allowed to be implemented in a conforming system. The dynamic requirements specify the use of implemented capabilities in order to meet requirements for interworking.

The following symbols, additional to those defined in the base standard PICS proforma, are used in this annex:

m	mandatory field/function
o	optional field/function
o.<*n*>	optional field/function, indicating mutually exclusive or selectable options among a set. A footnote to the relevant table states explicitly what the requirement is for each numbered group
x	prohibited field/function
c.<*cid*>	conditional requirement, according to the condition identified by <*cid*>
<item>:	simple-predicate condition, dependent on the support marked for <*item*>

Each item whose reference is used in a predicate, is indicated by an asterisk (*) in the Item column.

Copyright International Organization for Standardization
Provided by IHS under license with ISO
No reproduction or networking permitted without license from IHS Not for Resale

A.2 IPRL

A.2.1 Major Capabilities

Base item	Feature	Base standard status	Functional standard requirement	
			Static	Dynamic
* ETR	Early Token Release	O	m	c.1
* SRT	Source Routeing Capable	O	m	o
* DR4	4 Mbps Data Signalling Rate	O.1	m	o.2
* DR16	16 Mbps Dta Signalling Rate	O.1	m	o.2

c.1: if DR16 then m else x
O.1: support for at least one of these options is required
o.2: use of one and only one of these options is required on a particular Token Ring

A.2.2 Destination and Source MAC Address Fields

Base item	Feature	Base standard status	Functional standard requirement	
			Static	Dynamic
AF1	2 Octet MAC Address	O.3	o	x
AF2	6 Octet MAC Address	O.3	m	m

O.3: support for one and only one of these options is required

A.2.3 LLC Data Frames

Base item	Feature	Base standard status	Functional standard requirement
FP10	LLC Frame, info field Receive, minimum 133 octets	M	**DR4:** 4399 octets **DR16:** 17749 octets

Copyright International Organization for Standardization
Provided by IHS under license with ISO
No reproduction or networking permitted without license from IHS
Not for Resale

A.2.4 MAC Control Frames

Base item	Feature	Base standard status	Functional standard requirement
MV9	Lobe_Media_Test		
	Transmit	O	m
	Receive	O	m

A.2.5 MAC Control Frame Subvectors

Base item	Feature	Base standard status	Functional standard requirement
SV20	Wrap_Data		
	Transmit	O	m
	Receive	O	m

A.2.6 Timers

The following timer intervals are applicable only when observable from external behaviour. No particular realization is implied.

Base item	Feature	Base standard status	Functional standard requirement
TI1	Return_to_Repeat	M	4 msec
TI2	Holding_Token	M	8,9 msec
TI3	Queue_PDU	M	20 msec
TI4	Valid_Transmission	M	10 msec
TI5	No_Token	M	2,6 sec
TI6	Active_Monitor	M	7 sec
TI7	Standby_Monitor	M	15 sec
TI8	Error_Report	M	2 sec
TI9	Beacon_Transmit	M	16 sec
TI10	Beacon_Receive	M	160 msec

Copyright International Organization for Standardization
Provided by IHS under license with ISO
No reproduction or networking permitted without license from IHS Not for Resale

A.2.7 Counters

Counts of the following events are considered to be visible externally through their transmission in MAC frames. No particular realization is implied.

Base item	Feature	Base standard status	Functional standard requirement
CO1	Line_Error	O	m
CO2	Internal_Error	O	m
CO3	Burst_Error	O	m
CO4	AC_Error	O	m
CO5	Abort_Delimiter_Transmitted	O	m
CO6	Lost_Frame_Error	O	m
CO7	Receive_Congestion_Error	O	m
CO8	Frame_Copied_Error	O	m
CO10	Token_Error	O	m

Copyright International Organization for Standardization
Provided by IHS under license with ISO
No reproduction or networking permitted without license from IHS
Not for Resale

Annex B
(informative)

Bibliography

B.1 Token Ring Cabling Practice

ISO/IEC 8802-5 specifies the Token Ring station (DTE) characteristics as measured at the Medium Interface Connector (MIC), ref. ISO/IEC 8802-5, subclause 7.2. This part of ISO/IEC ISP 10608 is based on this scope.

The lobe cable (TCU to MIC), the Trunk Coupling Unit, and the trunk cable are outside the scope of this part of ISO/IEC ISP 10608. ISO/IEC 8802-5, subclauses 7.3 and 7.4, provides information on the operation of a Trunk Coupling Unit.

Additional information relating to suitable media types and installation procedures for a Token Ring cabling system is provided by the following reference:

- ISO/IEC TR 12075:...[1], *Planning and Installation Guide for Customer Premises Cabling to support Attachment of ISO/IEC 8802-5 Token Ring Stations*

ISO/IEC TR 12075, clause 11, provides planning and installation guidance for use of unshielded twisted pair cable for 4 Mbps Token Ring lobe attachment (PHY to TCU cable). It should be noted that such attachment does not meet the requirements of ISO/IEC 8802-5:1992.

An enhancement to ISO/IEC 8802-5 to support Token Ring operation over unshielded twisted pair at 4 and 16 Mbps operation is presently under work. Also, the use of fiber optic cables for Token Ring lobe attachment is under study.

The following Technical Reports may provide additional guidance in these areas:

- ISO/IEC TR 10738:1993, *Information technology - Local and metropolitan area networks - Token ring access method and physical layer specifications - Recommended practice for use of unshielded twisted pair cable (UTP) for token ring data transmission at 4 Mbit/s.*

- ISO/IEC TR 11583:...[1], *Information technology - Local and metropolitan area networks - Token ring access method and physical layer specifications - Fibre optic station attachment*

1) To be published.

Copyright International Organization for Standardization
Provided by IHS under license with ISO
No reproduction or networking permitted without license from IHS Not for Resale

Annex C
(informative)

Defect Reports

C.1 List of Defect Reports

No defect reports are registered.

Copyright International Organization for Standardization
Provided by IHS under license with ISO
No reproduction or networking permitted without license from IHS
Not for Resale

© ISO/IEC

ICS 35.100.00

Descriptors: data processing, information interchange, network interconnection, open systems interconnection, data transmission, communication procedure, control procedures, transport layer, network layer, profiles, media access control, local area networks.

Price based on 9 pages

Copyright International Organization for Standardization
Provided by IHS under license with ISO
No reproduction or networking permitted without license from IHS

Not for Resale