**DRAFT INTERNATIONAL STANDARD** ISO/IEC 26907

Attributed to ISO/IEC JTC 1 by the Central Secretariat (see page iii)

| Voting begins on | Voting terminates on |
|---|---|
| **2009-03-27** | **2009-08-27** |

INTERNATIONAL ORGANIZATION FOR STANDARDIZATION • МЕЖДУНАРОДНАЯ ОРГАНИЗАЦИЯ ПО СТАНДАРТИЗАЦИИ • ORGANISATION INTERNATIONALE DE NORMALISATION
INTERNATIONAL ELECTROTECHNICAL COMMISSION • МЕЖДУНАРОДНАЯ ЭЛЕКТРОТЕХНИЧЕСКАЯ КОММИСИЯ • COMMISSION ÉLECTROTECHNIQUE INTERNATIONALE

# FAST-TRACK PROCEDURE

# Information technology — Telecommunications and information exchange between systems — High Rate Ultra Wideband PHY and MAC Standard

[Revision of first edition (ISO/IEC 26907:2007)]

*Technologies de l'information — Téléinformatique — «High Rate Ultra Wideband PHY» et «MAC Standard»*

ICS 35.110

**In accordance with the provisions of Council Resolution 21/1986 this DIS is circulated in the English language only.**

**Conformément aux dispositions de la Résolution du Conseil 21/1986, ce DIS est distribué en version anglaise seulement.**

THIS DOCUMENT IS A DRAFT CIRCULATED FOR COMMENT AND APPROVAL. IT IS THEREFORE SUBJECT TO CHANGE AND MAY NOT BE REFERRED TO AS AN INTERNATIONAL STANDARD UNTIL PUBLISHED AS SUCH.

IN ADDITION TO THEIR EVALUATION AS BEING ACCEPTABLE FOR INDUSTRIAL, TECHNOLOGICAL, COMMERCIAL AND USER PURPOSES, DRAFT INTERNATIONAL STANDARDS MAY ON OCCASION HAVE TO BE CONSIDERED IN THE LIGHT OF THEIR POTENTIAL TO BECOME STANDARDS TO WHICH REFERENCE MAY BE MADE IN NATIONAL REGULATIONS.

RECIPIENTS OF THIS DRAFT ARE INVITED TO SUBMIT, WITH THEIR COMMENTS, NOTIFICATION OF ANY RELEVANT PATENT RIGHTS OF WHICH THEY ARE AWARE AND TO PROVIDE SUPPORTING DOCUMENTATION.

© International Organization for Standardization, 2009
© International Electrotechnical Commission, 2009

Copyright International Organization for Standardization
Provided by IHS under license with ISO
No reproduction or networking permitted without license from IHS
Not for Resale

**PDF disclaimer**

This PDF file may contain embedded typefaces. In accordance with Adobe's licensing policy, this file may be printed or viewed but shall not be edited unless the typefaces which are embedded are licensed to and installed on the computer performing the editing. In downloading this file, parties accept therein the responsibility of not infringing Adobe's licensing policy. The ISO Central Secretariat accepts no liability in this area.

Adobe is a trademark of Adobe Systems Incorporated.

Details of the software products used to create this PDF file can be found in the General Info relative to the file; the PDF-creation parameters were optimized for printing. Every care has been taken to ensure that the file is suitable for use by ISO member bodies. In the unlikely event that a problem relating to it is found, please inform the Central Secretariat at the address given below.

## Copyright notice

This ISO document is a Draft International Standard and is copyright-protected by ISO. Except as permitted under the applicable laws of the user's country, neither this ISO draft nor any extract from it may be reproduced, stored in a retrieval system or transmitted in any form or by any means, electronic, photocopying, recording or otherwise, without prior written permission being secured.

Requests for permission to reproduce should be addressed to either ISO at the address below or ISO's member body in the country of the requester.

ISO copyright office
Case postale 56 • CH-1211 Geneva 20
Tel. + 41 22 749 01 11
Fax + 41 22 749 09 47
E-mail copyright@iso.org
Web www.iso.org

Reproduction may be subject to royalty payments or a licensing agreement.

Violators may be prosecuted.

--`,,```,,,,````-`-`,,`,,`,`,,`---

Copyright International Organization for Standardization
Provided by IHS under license with ISO
No reproduction or networking permitted without license from IHS

© ISO/IEC 2009 — All rights reserved

Not for Resale

## NOTE FROM ITTF

This draft International Standard is submitted for JTC 1 national body vote under the Fast-Track Procedure.

In accordance with Resolution 30 of the JTC 1 Berlin Plenary 1993, the proposer of this document recommends assignment of ISO/IEC 26907 to JTC 1/SC 6.

**"FAST-TRACK" PROCEDURE**

**1** Any P-member and any Category A liaison organization of ISO/IEC JTC 1 may propose that an existing standard from any source be submitted directly for vote as a DIS. The criteria for proposing an existing standard for the fast-track procedure are a matter for each proposer to decide.

**2** The proposal shall be received by the ITTF which will take the following actions.

**2.1** To settle the copyright and/or trade mark situation with the proposer, so that the proposed text can be freely copied and distributed within JTC 1 without restriction.

**2.2** To assess in consultation with the JTC 1 secretariat which SC is competent for the subject covered by the proposed standard and to ascertain that there is no evident contradiction with other International Standards.

**2.3** To distribute the text of the proposed standard as a DIS. In case of particularly bulky documents the ITTF may demand the necessary number of copies from the proposer.

**3** The period for combined DIS voting shall be five months. In order to be accepted the DIS must be supported by 75 % of the votes cast (abstention is not counted as a vote) and by two-thirds of the P-members voting of JTC 1.

**4** At the end of the voting period, the comments received, whether editorial only or technical, will be dealt with by a working group appointed by the secretariat of the relevant SC.

**5** If, after the deliberations of this WG, the requirements of 3 above are met, the amended text shall be sent to the ITTF by the secretariat of the relevant SC for publication as an International Standard.

If it is impossible to agree to a text meeting the above requirements, the proposal has failed and the procedure is terminated.

In either case the WG shall prepare a full report which will be circulated by the ITTF.

**6** If the proposed standard is accepted and published, its maintenance will be handled by JTC 1.

--`,,```,,,,````-`-`,,`,,`,`,,`---

© ISO/IEC 2000 – All rights reserved

Copyright International Organization for Standardization
Provided by IHS under license with ISO
No reproduction or networking permitted without license from IHS
Not for Resale

--`,,```,,,,````-`-`,,`,,`,`,,`---

Copyright International Organization for Standardization
Provided by IHS under license with ISO
No reproduction or networking permitted without license from IHS
Not for Resale

ecma INTERNATIONAL

Standard ECMA-368

3rd Edition / December 2008

# High Rate Ultra Wideband PHY and MAC Standard

DRAFT 2009

Standard

Copyright International Organization for Standardization
Provided by IHS under license with ISO
No reproduction or networking permitted without license from IHS
Not for Resale

Rue du Rhône 114 CH-1204 Geneva T: +41 22 849 6000 F: +41 22 849 6001

Copyright International Organization for Standardization
Provided by IHS under license with ISO
No reproduction or networking permitted without license from IHS
Not for Resale

Standard
ECMA-368

3rd Edition - December 2008

# High Rate Ultra Wideband PHY and MAC Standard

DRAFT 2009



--`,,```,,,,````-`-`,,`,,`,`,,`---

Copyright International Organization for Standardization
Provided by IHS under license with ISO
No reproduction or networking permitted without license from IHS

Not for Resale

Copyright International Organization for Standardization
Provided by IHS under license with ISO
No reproduction or networking permitted without license from IHS
Not for Resale

# Introduction

This International Standard specifies the ultra wideband (UWB) physical layer (PHY) and medium access control (MAC) sublayer for a high-speed, short-range wireless network, utilizing all or part of the spectrum between 3 100 – 10 600 MHz supporting data rates of up to 480 Mb/s.

This standard divides the spectrum into 14 bands, each with a bandwidth of 528 MHz. The first 12 bands are then grouped into four band groups consisting of three bands. The last two bands are grouped into a fifth band group. A sixth band group is also defined within the spectrum of the first four, consistent with usage within worldwide regulatory regulations.

A MultiBand Orthogonal Frequency Division Modulation (MB-OFDM) scheme is used to transmit information. A total of 110 sub-carriers (100 data carriers and 10 guard carriers) are used per band. In addition, 12 pilot subcarriers allow for coherent detection. Frequency-domain spreading, time-domain spreading, and forward error correction (FEC) coding are provided for optimum performance under a variety of channel conditions.

The MAC sublayer is designed to enable mobility, such that a group of devices may continue communicating while merging or splitting from other groups of devices. To maximize flexibility, the functionality of this MAC is distributed among devices. These functions include distributed coordination to avoid interference between different groups of devices by appropriate use of channels and distributed medium reservations to ensure Quality of Service. The MAC sublayer provides prioritized schemes for isochronous and asynchronous data transfer. To do this, a combination of Carrier Sense Multiple Access (CSMA) and Time Division Multiple Access (TDMA) is used. A Distributed Reservation Protocol (DRP) is used to reserve the medium for TDMA access for isochronous and other traffic. For network scalability, Prioritized Contention Access (PCA) is provided using a CSMA scheme. The MAC has policies that ensure equitable sharing of the bandwidth.

Taken together, the PHY and MAC specified in this Ecma standard are well-suited to high rate, zero infrastructure communications between a mixed population of portable and fixed electronic devices.

This International Standard is not intended to represent the regulatory requirements of any country or region.

The 2nd edition adds the following for regulatory flexibility:

- An additional TFI code
- An additional Band Group
- Tone nulling for interfence avoidance

and

- relaxes the requirement for Band group 1
- relocates some assigned numbers to Ecma registeries on the website.

The 3rd edition adds an Information Element for Bluetooth.

This Ecma Standard has been adopted by the General Assembly of December 2008.

DRAFT 2009

Copyright International Organization for Standardization
Provided by IHS under license with ISO
No reproduction or networking permitted without license from IHS
Not for Resale

Copyright International Organization for Standardization
Provided by IHS under license with ISO
No reproduction or networking permitted without license from IHS
Not for Resale

# Table of contents


**1 Scope** 1

**2 Conformance** 1

**3 Normative References** 1

**4 Terms and Definitions** 1

4.1 access category (AC) 1
4.2 beacon group 1
4.3 beacon period (BP) 1
4.4 beacon period start time (BPST) 1
4.5 channel 1
4.6 data integrity 2
4.7 device 2
4.8 distributed reservation protocol (DRP) 2
4.9 extended beacon group 2
4.10 frame 2
4.11 frame protection 2
4.12 MAC Client 2
4.13 MAC command data unit (MCDU) 2
4.14 MAC protocol data unit (MPDU) 2
4.15 MAC service data unit (MSDU) 2
4.16 message integrity code (MIC) 2
4.17 neighbour 2
4.18 network allocation vector (NAV) 2
4.19 prioritized contention access (PCA) 2
4.20 pseudo-random number generation 2
4.21 random number generator 3
4.22 reservation 3
4.23 reservation block 3
4.24 secure frame 3
4.25 stream 3
4.26 superframe 3
4.27 symmetric key 3
4.28 transmission opportunity (TXOP) 3
4.29 TXOP holder 3
4.30 user priority 3

**5 Notational conventions** 3



DRAFT 2009





Copyright International Organization for Standardization
Provided by IHS under license with ISO
No reproduction or networking permitted without license from IHS
Not for Resale

**6 Abbreviations and acronyms** **3**

**7 General description** **7**

7.1 PHY general description 7
7.2 MAC general description 7
7.2.1 General description of the architecture 7
7.2.2 Device address 8
7.2.3 Features assumed from the PHY 8
7.2.4 Overview of MAC service functionality 9
7.2.5 MUX sublayer 13
7.2.6 MAC policies 13
7.2.7 Test vectors 13

**8 PHY layer partitioning** **14**

8.1 PHY function 14
8.2 PLCP sublayer 14
8.3 PMD sublayer 14
8.4 PHY layer management entity (PLME) 14

**9 Description of signal** **14**

9.1 Mathematical framework 14
9.2 Tone-Nulling 16

**10 PLCP sublayer** **16**

10.1 PPDU 17
10.1.1 PSDU rate-dependent parameters 19
10.1.2 Timing-related parameters 19
10.1.3 Frame-related parameters 20
10.2 PLCP preamble 20
10.2.1 Standard PLCP preamble 21
10.2.2 Burst PLCP preamble 23
10.3 PLCP header 45
10.3.1 PHY header 45
10.3.2 Reed-Solomon outer code for the PLCP header 49
10.3.3 Header check sequence 52
10.4 PSDU 52
10.4.1 Pad bits 53
10.5 Data scrambler 54
10.6 Tail bits 55
10.7 Convolutional encoder 55
10.8 Bit interleaving 59
10.9 Constellation mapping 61
10.9.1 QPSK 61
10.9.2 Dual-carrier modulation (DCM) 62
10.10 OFDM modulation 64

DRAFT 2009



Copyright International Organization for Standardization
Provided by IHS under license with ISO
No reproduction or networking permitted without license from IHS
Not for Resale

10.10.1 Implementation considerations 68
10.10.2 Data subcarriers 68
10.10.3 Guard subcarriers 72
10.10.4 Pilot subcarriers 72

**11 General requirements 74**

11.1 Operating band frequencies 74
11.1.1 Operating frequency range 74
11.1.2 Band numbering 74
11.2 Channelization 75
11.3 PHY layer timing 79
11.3.1 Interframe spacing 79
11.3.2 Receive-to-transmit turnaround time 79
11.3.3 Transmit-to-receive turnaround time 80
11.3.4 Time between successive transmissions 80
11.3.5 Band frequency switch time 80

**12 Transmitter specifications 80**

12.1 Transmit PSD mask 80
12.2 Transmit centre frequency tolerance 81
12.3 Symbol clock frequency tolerance 81
12.4 Clock synchronization 81
12.5 Phase coherence 81
12.6 Transmit power control 81
12.7 Transmitter constellation error 82

**13 Receiver specification 84**

13.1 Receiver sensitivity 84
13.2 Receiver CCA performance 85
13.3 Link quality indicator 85
13.4 Receive Signal Strength Indicator 86

**14 Ranging and location awareness 86**

14.1 Ranging requirements 86
14.2 Ranging reference signal 86
14.3 PHY ranging resources 86
14.4 PHY ranging operation 86
14.5 Ranging calibration constants 87
14.6 Example range measurement (informative) 87

**15 PHY and MAC service access points (informative) 88**

15.1 Generic MIB management primitives 89
15.1.1 XX-GET.request 90
15.1.2 XX-GET.confirm 90
15.1.3 XX-SET.request 91

DRAFT 2009



Copyright International Organization for Standardization
Provided by IHS under license with ISO
No reproduction or networking permitted without license from IHS
Not for Resale

15.1.4 XX-SET.confirm 91
15.2 PHY SAP interface 92
15.2.1 Data transfer 92
15.2.2 PHY transmission control 93
15.2.3 PHY reception control 95
15.2.4 PHY CCA control 98
15.3 PLME SAP interface 99
15.3.1 PHY reset 101
15.3.2 PHY ranging timer control 101
15.4 MAC sublayer management primitives 103
15.5 MAC management information base (MIB) 103
15.6 MLME SAP interface 103
15.6.1 Reset 103
15.6.2 Scan 104
15.6.3 Beacon transmission and reception 106
15.6.4 IE management 111
15.6.5 PTK establishment 113
15.6.6 GTK solicitation/distribution 116
15.6.7 Temporal key update 119
15.6.8 Security violation report 121
15.6.9 Pseudo-random function (PRF) 122
15.6.10 Application-specific IE (ASIE) management 123
15.6.11 Multicast address binding 126
15.6.12 Link events 129
15.6.13 Probe 133
15.6.14 Hibernation and sleep cycle 136
15.6.15 Higher layer synchronization support 141
15.6.16 Reservation management 143
15.6.17 Connection configuration primitives 150
15.6.18 Range measurement 151
15.6.19 Application-specific command management 153
15.7 MAC SAP interface 155
15.7.1 MAC-DATA.request 157
15.7.2 MAC-DATA.indication 157
15.7.3 MAC-DATA.confirm 158

**16 MAC frame formats 158**

16.1 Frame format conventions 158
16.1.1 Figures 158
16.1.2 Octet order 159
16.1.3 Encoding 159
16.2 General MAC frame format 159
16.2.1 Frame control 160
16.2.2 DestAddr 162

DRAFT 2009



Copyright International Organization for Standardization
Provided by IHS under license with ISO
No reproduction or networking permitted without license from IHS
Not for Resale

16.2.3 SrcAddr 162
16.2.4 Sequence control 162
16.2.5 Access information 162
16.2.6 Frame payload 163
16.2.7 FCS 164
16.3 Beacon frames 165
16.4 Control frames 166
16.4.1 Immediate acknowledgement (Imm-ACK) 167
16.4.2 Block acknowledgement (B-ACK) 167
16.4.3 Request to send (RTS) 168
16.4.4 Clear to send (CTS) 168
16.4.5 Unused DRP reservation announcement (UDA) 168
16.4.6 Unused DRP reservation response (UDR) 169
16.4.7 Application-specific 169
16.5 Command frames 169
16.5.1 DRP reservation request 170
16.5.2 DRP reservation response 171
16.5.3 Probe 171
16.5.4 Pairwise temporal key (PTK) 171
16.5.5 Group temporal key (GTK) 172
16.5.6 Range measurement 173
16.5.7 Application-specific 175
16.6 Data frames 175
16.7 Aggregated data frames 175
16.8 Information elements 176
16.8.1 Application-specific IE (ASIE) 178
16.8.2 Application-specific probe IE 178
16.8.3 Beacon period occupancy IE (BPOIE) 178
16.8.4 BP switch IE 179
16.8.5 Channel change IE 180
16.8.6 Distributed reservation protocol (DRP) IE 180
16.8.7 DRP availability IE 182
16.8.8 Hibernation anchor IE 182
16.8.9 Hibernation mode IE 183
16.8.10 Identification IE 183
16.8.11 Link feedback IE 185
16.8.12 MAC capabilities IE 186
16.8.13 Master key identifier (MKID) IE 187
16.8.14 Multicast address binding (MAB) IE 187
16.8.15 PCA availability IE 188
16.8.16 PHY capabilities IE 189
16.8.17 Probe IE 191
16.8.18 Regulatory Domain IE 191
16.8.19 Relinquish request IE 192

DRAFT 2009



Copyright International Organization for Standardization
Provided by IHS under license with ISO
No reproduction or networking permitted without license from IHS
Not for Resale

16.8.20 Tone-nulling (TN) IE 193
16.8.21 Traffic indication map (TIM) IE 194

**17 MAC sublayer functional description 194**

17.1 Frame processing 195
17.1.1 Frame addresses 195
17.1.2 Frame reception 196
17.1.3 Frame transaction 196
17.1.4 Frame transfer 197
17.1.5 Frame retry 197
17.1.6 Inter-frame space (IFS) 197
17.1.7 Duplicate detection 198
17.1.8 RTS/CTS use 198
17.1.9 MAC header fields 199
17.1.10 Information elements 202
17.2 Beacon period 205
17.2.1 Beacon slot state 206
17.2.2 BP length 206
17.2.3 Beacon transmission and reception 207
17.2.4 Beacon slot collision detection 208
17.2.5 BP contraction 209
17.2.6 Merger of multiple BPs 210
17.3 Prioritized contention access (PCA) 213
17.3.1 PCA medium availability 214
17.3.2 NAV 214
17.3.3 Medium status 214
17.3.4 PCA parameters 214
17.3.5 Obtaining a TXOP 215
17.3.6 Using a TXOP 216
17.3.7 Invoking a backoff procedure 217
17.3.8 Decrementing a backoff counter 219
17.4 Distributed reservation protocol (DRP) 219
17.4.1 Reservation type 219
17.4.2 Medium access 221
17.4.3 DRP availability IE 221
17.4.4 DRP reservation negotiation 221
17.4.5 DRP reservation announcements 223
17.4.6 Resolution of DRP reservation conflicts 223
17.4.7 BPST realignment and existing DRP reservations 225
17.4.8 Modification and termination of existing DRP reservations 225
17.4.9 Release of hard or private DRP reservation blocks 226
17.4.10 Retransmit procedures in DRP reservations 226
17.5 Synchronization of devices 227
17.5.1 Clock accuracy 227

DRAFT 2007



Copyright International Organization for Standardization
Provided by IHS under license with ISO
No reproduction or networking permitted without license from IHS
Not for Resale

17.5.2 Synchronization for devices in hibernation mode 227
17.5.3 Guard times 227
17.6 Fragmentation and reassembly 229
17.7 Aggregation 230
17.8 Acknowledgement policies 230
17.8.1 No-ACK 230
17.8.2 Immediate ACK 230
17.8.3 Block ACK 230
17.9 Probe 232
17.10 Dynamic channel selection 233
17.11 Multi-rate support 233
17.12 Transmit power control 233
17.13 Power management mechanisms 234
17.13.1 Power management modes 234
17.13.2 Device power states 234
17.13.3 Power state transitions 234
17.13.4 Hibernation mode operation 235
17.13.5 Hibernation anchor operation 236
17.14 ASIE operation 237
17.15 Range measurement operation 237
17.16 MAC sublayer parameters 240

**18 Security 241**

18.1 Security mechanisms 242
18.1.1 Security operation 242
18.1.2 4-way handshake 242
18.1.3 Key transport 242
18.1.4 Freshness protection 243
18.1.5 Data encryption 243
18.1.6 Frame integrity protection 243
18.2 Security modes 243
18.2.1 Security mode 0 245
18.2.2 Security mode 1 245
18.2.3 Security mode 2 245
18.3 Temporal keys 246
18.3.1 Mutual authentication and PTK derivation 246
18.3.2 GTK exchange 247
18.3.3 Pseudo-random function (PRF) definition 248
18.3.4 PTK and KCK derivation 249
18.3.5 PTK MIC generation 250
18.3.6 Random number generation 250
18.4 Frame reception steps and replay prevention measures 250
18.4.1 Frame reception 251
18.4.2 Replay prevention 251

DRAFT 2009



Copyright International Organization for Standardization
Provided by IHS under license with ISO
No reproduction or networking permitted without license from IHS
Not for Resale

18.4.3 Implications on GTKs 251
18.5 AES-128 CCM Inputs 251
18.5.1 Overview 252
18.5.2 Nonce 252
18.5.3 CCM blocks 252

**Annex A (normative) MUX sublayer 255**

**Annex B (normative) MAC policies 259**

**Annex C (normative) Specifier ID Assigned numbers 263**

**Annex D (informative) MAC test vectors 265**

**Annex E (informative) Example encoding of a PHY packet 277**

**Annex F (informative) Recommended out-of-band emission limits 323**

**Annex G (informative) Range measurement calculations 325**

**Annex H (informative) Bibliography 329**

DRAFT 2007



Copyright International Organization for Standardization
Provided by IHS under license with ISO
No reproduction or networking permitted without license from IHS
Not for Resale

# 1 Scope

This International Standard specifies a distributed medium access control (MAC) sublayer and a physical layer (PHY) for wireless networks.

# 2 Conformance

Conforming devices implement the MAC sublayer and the PHY layer as specified herein and support:

1. Data rates of 53,3 Mb/s, 106,7 Mb/s, and 200 Mb/s for transmitting and receiving;
2. At least one of the band groups;
3. Time-frequency codes using TFI, TFI2 and FFI.

In addition, conforming devices may implement the MAC/PHY Interface as specified in ECMA-369.

# 3 Normative References

The following referenced documents are indispensable for the application of this document. For dated references, only the edition cited applies. For undated references, the latest edition of the referenced document (including any amendments) applies.

ECMA-369, MAC-PHY Interface for ECMA-368

ISO/IEC 10646:2003, Information technology -- Universal Multiple-Octet Coded Character Set (UCS)

ISO/IEC 18033-3:2005, Information technology -- Security techniques -- Encryption algorithms -- Part 3: Block ciphers

# 4 Terms and Definitions

For the purposes of this International Standard, the following terms and definitions apply. For terms not defined in this Clause, please consult IEEE100, The Authoritative Dictionary of IEEE Standards Terms, Seventh Edition.

## 4.1 access category (AC)

label for the common set of prioritized contention access (PCA) parameters that are used by a device to contend for the medium in order to transmit MAC protocol data units (MPDUs) with certain priorities

## 4.2 beacon group

set of devices from which a device receives beacons that identify the same beacon period start time (BPST) as the device

## 4.3 beacon period (BP)

period of time declared by a device during which it sends or listens for beacons

## 4.4 beacon period start time (BPST)

start of the beacon period

## 4.5 channel

medium over which cooperating entities exchange information

DRAFT 2009



Copyright International Organization for Standardization
Provided by IHS under license with ISO
No reproduction or networking permitted without license from IHS
Not for Resale

### 4.6 data integrity

assurance that the data has not been modified from its original form

### 4.7 device

entity containing an implementation of this Standard

### 4.8 distributed reservation protocol (DRP)

protocol implemented in each device to support negotiation and maintenance of channel time reservations binding on all neighbours of the reservation participants

### 4.9 extended beacon group

union of a device's beacon group and the beacon groups of all devices in the device's beacon group

### 4.10 frame

unit of data transmitted by a device

### 4.11 frame protection

security service provided for a frame, including (but not limited to) payload encryption, message authentication, and replay attack protection

### 4.12 MAC Client

entity above the MAC sublayer that generates MAC service data units for delivery to corresponding entities in other devices, and receives MAC service data units from such entities

### 4.13 MAC command data unit (MCDU)

unit of data exchanged between peer medium access control sublayers in order to manage medium access control functions

### 4.14 MAC protocol data unit (MPDU)

unit of data exchanged between two peer medium access control sublayers using the physical layer

### 4.15 MAC service data unit (MSDU)

information that is delivered as a unit between medium access control service access points (SAPs)

### 4.16 message integrity code (MIC)

cryptographic checksum generated using a symmetric key that is typically appended to data in order to provide data integrity and source authentication similar to a digital signature

### 4.17 neighbour

any device in a device's beacon group

### 4.18 network allocation vector (NAV)

indicator, maintained by each device capable of using PCA, of time periods when PCA-based transmission onto the wireless medium will not be initiated by the device, whether or not the device's clear-channel assessment function senses that the wireless medium is busy

### 4.19 prioritized contention access (PCA)

prioritized CSMA/CA access mechanism used by devices for medium access

### 4.20 pseudo-random number generation

process of generating a deterministic sequence of bits from a given seed that has the statistical properties of a random sequence of bits when the seed is not known

--`,,```,,,,````-`-`,,`,,`,`,,`---



Copyright International Organization for Standardization
Provided by IHS under license with ISO
No reproduction or networking permitted without license from IHS
Not for Resale

DRAFT 2009

### 4.21 random number generator

method or design that provides a sequence of bits that is unpredictable. A cryptographic random number generator is one specific type

### 4.22 reservation

named set of one or more medium access slots (MASs) within a superframe during which a device has preferential access to the medium

### 4.23 reservation block

one or more temporally contiguous medium access slots (MASs) within a reservation not adjacent to other MASs in the reservation

### 4.24 secure frame

frame in which frame protection is applied

### 4.25 stream

logical flow of MSDUs from one device to one or more other devices

### 4.26 superframe

periodic time interval used in this Standard to coordinate frame transmissions between devices, which contains a beacon period followed by a data period

### 4.27 symmetric key

secret key shared between two or more parties that may be used for both encryption and decryption as well as for message integrity code computation and verification

### 4.28 transmission opportunity (TXOP)

interval of time obtained by a device using prioritized contention access (PCA) to initiate transmissions onto the medium

### 4.29 TXOP holder

device that has successfully contended for a TXOP

### 4.30 user priority

value assigned to an MSDU by the MAC client that determines the MSDU's transfer priority

## 5 Notational conventions

The use of the word *shall* is meant to indicate a requirement which is mandated by the Standard, i.e. it is required to support that particular feature with no deviation in order to conform to the Standard.

The use of the word *should* is meant to recommend one particular course of action over several other possibilities, however without mentioning or excluding these others.

The use of the word *may* is meant to indicate that a particular course of action is permitted.

The use of the word *can* is synonymous with is able to – it is meant to indicate a capability or a possibility.

All floating-point values have been rounded to 4 decimal places.

## 6 Abbreviations and acronyms

| | |
|---|---|
| AC | Access Category |
| ACK | Acknowledgment |



Copyright International Organization for Standardization
Provided by IHS under license with ISO
No reproduction or networking permitted without license from IHS
Not for Resale

| | |
|---|---|
| AES | Advanced Encryption Standard |
| AIFS | Arbitration Inter-Frame Space |
| ASIE | Application-Specific Information Element |
| B-ACK | Block Acknowledgment |
| BcstAddr | Broadcast Device Address |
| BM | Burst Mode |
| BP | Beacon Period |
| BPOIE | Beacon Period Occupancy Information Element |
| BPST | Beacon Period Start Time |
| CBC-MAC | Cipher Block Chaining-Message Authentication Code |
| CCA | Clear Channel Assessment |
| CCM | Counter Mode Encryption and Cipher Block Chaining Message Authentication Code |
| CPE | Common Phase Error |
| CRC | Cyclic Redundancy Check |
| CSMA/CA | Carrier Sense Multiple Access with Collision Avoidance |
| CTS | Clear To Send |
| DAA | Detect And Avoid |
| DAC | Digital-to-Analog Converter |
| DCM | Dual Carrier Modulation |
| DestAddr | Destination Device Address |
| DevAddr | Device Address |
| DME | Device Management Entity |
| DRP | Distributed Reservation Protocol |
| EO | Encryption Offset |
| EUI | Extended Unique Identifier |
| FCS | Frame Check Sequence |
| FDS | Frequency-Domain Spreading |
| FEC | Forward Error Correction |
| FER | Frame Error Rate |
| FFI | Fixed-Frequency Interleaving |
| FFT | Fast Fourier Transform |
| GF | Galois Field |
| GTK | Group Temporal Key |
| HCS | Header Check Sequence |
| ID | Identifier |
| IDFT | Inverse Discrete Fourier Transform |

DRAFT 2009



Copyright International Organization for Standardization
Provided by IHS under license with ISO
No reproduction or networking permitted without license from IHS
Not for Resale

| | |
|---|---|
| IE | Information Element |
| IFFT | Inverse Fast Fourier Transform |
| IFS | Inter-Frame Space |
| Imm-ACK | Immediate Acknowledgment |
| KCK | Key Confirmation Key |
| LQE | Link Quality Estimator |
| LQI | Link Quality Indicator |
| LSB | Least-Significant Bit |
| MAC | Medium Access Control |
| MAS | Medium Access Slot |
| MCDU | MAC Command Data Unit |
| McstAddr | Multicast Device Address |
| MIB | Management Information Base |
| MIC | Message Integrity Code |
| MIFS | Minimum Interframe Spacing |
| MKID | Master Key Identifier |
| MLME | MAC Sublayer Management Entity |
| MPDU | MAC Protocol Data Unit |
| MSB | Most-Significant Bit |
| MSDU | MAC Service Data Unit |
| NAV | Network Allocation Vector |
| No-ACK | No Acknowledgement |
| OFDM | Orthogonal Frequency Division Multiplexing |
| OUI | Organizationally Unique Identifier |
| PAL | Protocol Adaptation Layer |
| PAN | Personal Area Network |
| PCA | Prioritized Contention Access |
| PDU | Protocol Data Unit |
| PER | Packet Error Rate |
| PHY | Physical (layer) |
| PHY-SAP | Physical Layer Service Access Point |
| PLCP | Physical Layer Convergence Protocol |
| PLME | Physical Layer Management Entity |
| PMD | Physical Medium Dependent |
| PMD-SAP | Physical Medium Dependent-Service Access Point |
| PMK | Pair-wise Master Key |
| PPDU | PLCP Protocol Data Unit |

DRAFT 2009



Copyright International Organization for Standardization
Provided by IHS under license with ISO
No reproduction or networking permitted without license from IHS
Not for Resale

| | |
|---|---|
| PPM | Parts Per Million |
| PRBS | Pseudo-Random Binary Sequence |
| PRF | Pseudo-Random Function |
| PSD | Power Spectral Density |
| PSDU | PHY Service Data Unit |
| PT | Preamble Type |
| PTK | Pair-wise Temporal Key |
| QPSK | Quadrature Phase Shift Keying |
| RF | Radio Frequency |
| RMS | Root mean squared |
| RX | Receive or Receiver |
| RS | Reed-Solomon |
| RSSI | Received Signal Strength Indicator |
| RTS | Request To Send |
| SAP | Service Access Point |
| SFC | Secure Frame Counter |
| SFN | Secure Frame Number |
| SIFS | Short Interframe Spacing |
| SrcAddr | Source Device Address |
| TDS | Time-Domain Spreading |
| TF | Time-Frequency |
| TFC | Time-Frequency Code |
| TFI | Time-Frequency Interleaving |
| TFI2 | Time-Frequency Interleaving over 2 bands |
| TKID | Temporal Key Identifier |
| TN | Tone-Nulling |
| TPC | Transmit Power Control |
| TX | Transmit or Transmitter |
| TXOP | Transmission Opportunity |
| UDA | Unused DRP Reservation Announcement |
| UDR | Unused DRP Reservation Response |
| UWB | Ultra Wideband |
| ZPS | Zero Padded Suffix |

DRAFT 2009



Copyright International Organization for Standardization
Provided by IHS under license with ISO
No reproduction or networking permitted without license from IHS
Not for Resale

# 7 General description

## 7.1 PHY general description

This Ecma Standard specifies the ultra wideband (UWB) physical layer (PHY) for a wireless personal area network (PAN), utilizing the unlicensed 3 100 – 10 600 MHz frequency band, supporting data rates of 53,3 Mb/s, 80 Mb/s, 106,7 Mb/s, 160 Mb/s, 200 Mb/s, 320 Mb/s, 400 Mb/s, and 480 Mb/s. Support for transmitting and receiving data rates of 53.3, 106.7, and 200 Mb/s shall be mandatory.

The UWB spectrum is divided into 14 bands, each with a bandwidth of 528 MHz. The first 12 bands are then grouped into 4 band groups consisting of 3 bands. The last two bands are grouped into a fifth band group. A sixth band group is also defined within the spectrum of the first four, consistent with usage within worldwide spectrum regulations. At least one of the band groups shall be supported.

This Ecma Standard specifies a MultiBand Orthogonal Frequency Division Modulation (MB-OFDM) scheme to transmit information. A total of 110 sub-carriers (100 data carriers and 10 guard carriers) are used per band to transmit the information. In addition, 12 pilot subcarriers allow for coherent detection. Frequency-domain spreading, time-domain spreading, and forward error correction (FEC) coding are used to vary the data rates. The FEC used is a convolutional code with coding rates of 1/3, 1/2, 5/8 and 3/4.

The coded data is then spread using a time-frequency code (TFC). This Ecma Standard specifies three types of time-frequency codes (TFCs): one where the coded information is interleaved over three bands, referred to as Time-Frequency Interleaving (TFI); one where the coded information is interleaved over two bands, referred to as two-band TFI or TFI2; and one where the coded information is transmitted on a single band, referred to as Fixed Frequency Interleaving (FFI). Support for TFI, TFI2 and FFI shall be mandatory.

Within the first four and the sixth band groups, four time-frequency codes using TFI and three time-frequency codes using each of TFI2 and FFI are defined; thereby, providing support for up to ten channels in each band group. For the fifth band group, two time-frequency codes using FFI and one using TFI2 are defined. For the sixth band group, the FFI channels and one of the TFI2 channels overlap fully with channels in the third and fourth band groups.

A mechanism is provided to allow individual OFDM subcarriers to be nulled. This, together with the choice of frequency bands and of TFI, TFI2 and FFI time frequency codes, provides substantial control over the use of spectrum by the transmitted signal, allowing the PHY to be used in a range of regulatory and radio coexistence scenarios.

## 7.2 MAC general description

### 7.2.1 General description of the architecture

As illustrated in Figure 1, the MAC is a sublayer of the Data Link Layer defined in the OSI basic reference model [H3]. The MAC service is provided by means of the MAC service access point (MAC SAP) to a single MAC service client, usually a higher layer protocol or adaptation layer. In this Standard the MAC sublayer is represented by a device address.

DRAFT ISO



Copyright International Organization for Standardization
Provided by IHS under license with ISO
No reproduction or networking permitted without license from IHS
Not for Resale

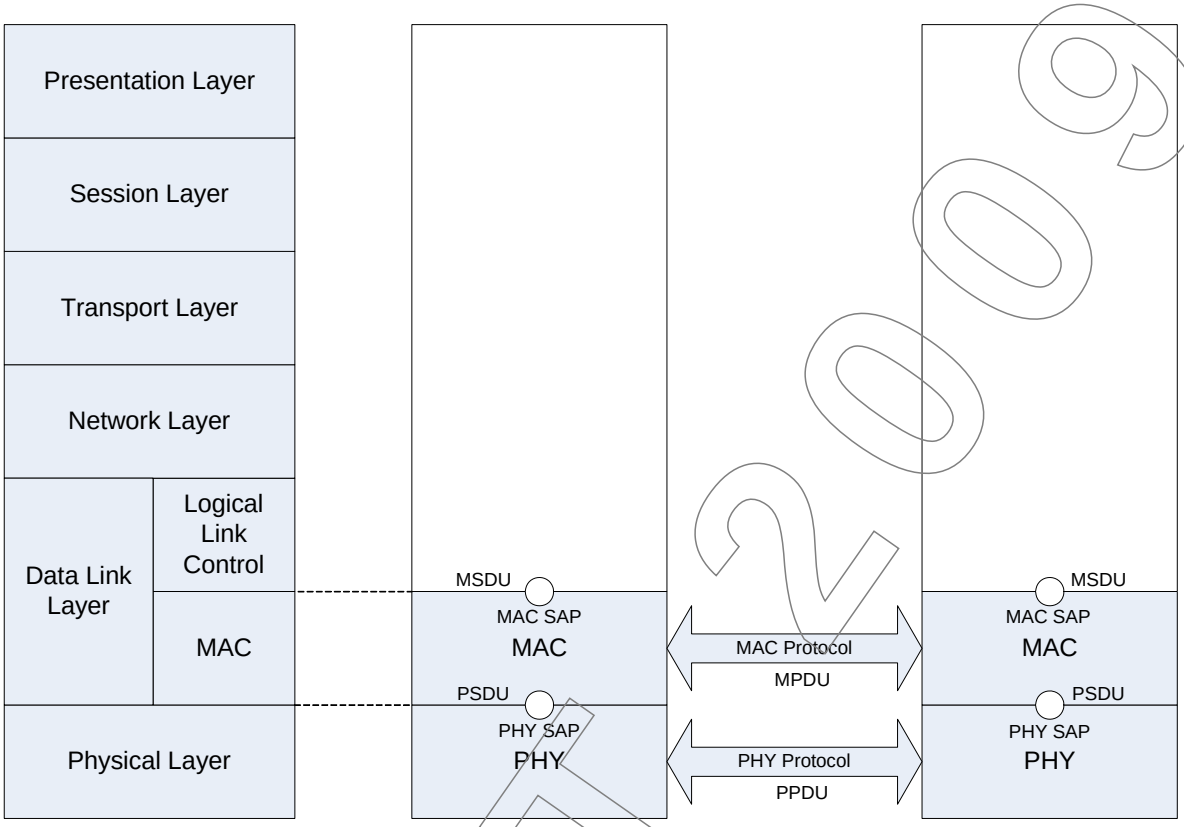


*Figure 1 - Architectural reference model*

The MAC sublayer in turn relies on the service provided by the PHY layer via the PHY service access point (PHY SAP). The MAC protocol applies between MAC sublayer peers.

### 7.2.2 Device address

Individual MAC sublayers are addressed via an EUI-48 [H1], and are associated with a volatile abbreviated address called a DevAddr. Unicast frames carry a destination DevAddr that identifies a single MAC sublayer.

DevAddrs are 16-bit values, generated locally, without central coordination. Consequently, it is possible for a single value to ambiguously identify two or more MAC entities. This Standard provides mechanisms for resolving ambiguous DevAddrs.

The MAC addressing scheme includes multicast and broadcast address values. A multicast address identifies a group of MAC entities. The broadcast address identifies all MAC entities.

### 7.2.3 Features assumed from the PHY

A MAC sublayer is associated with a single PHY layer via the PHY SAP as specified in Clause 15.

The MAC sublayer requires the following features provided by the PHY:

- Frame transmission in both single frame and burst mode
- Frame reception for both single frame and burst mode transmission
- PLCP header error indication for both PHY and MAC header structures



Copyright International Organization for Standardization
Provided by IHS under license with ISO
No reproduction or networking permitted without license from IHS
Not for Resale

- Clear channel assessment for estimation of medium activity
- Range measurement timestamps if MAC range measurement is supported.

Figure 2 defines the structure of a PHY frame.

- There are two types of preamble: Standard and burst.
- The PLCP header including MAC and PHY Headers is protected by a header check sequence (HCS).
- The Frame Payload is followed by its frame check sequence (FCS).

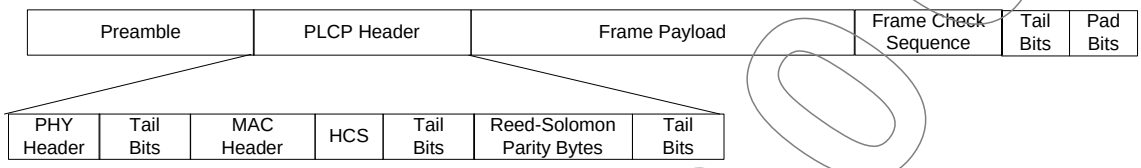


*Figure 2 - PHY Frame Structure*

Frames are transmitted by the PHY from the source device and delivered to the destination device in identical bit order. The start of a frame refers to the leading edge of the first symbol of the PHY frame at the local antenna and the end of a frame refers to the trailing edge of the last symbol of the PHY frame.

Frame transmission and reception are supported by the exchange of parameters between the MAC sublayer and the PHY layer. These parameters allow the MAC sublayer to control, and be informed of, the frame transmission mode, the frame payload data rate and length, the frame preamble, the PHY channel and other PHY-related parameters.

In single frame transmission, the MAC sublayer has full control of frame timing. In burst mode transmission, the MAC sublayer has control of the first frame timing and the PHY provides accurate timing for the remaining frames in the burst.

### 7.2.4 Overview of MAC service functionality

The MAC service defined in this Standard provides:

- Communication between cooperating devices within radio range on a single channel using the PHY;
- A distributed, reservation-based channel access mechanism;
- A prioritized, contention-based channel access mechanism;
- A synchronization facility for coordinated applications;
- Mechanisms for handling mobility and interference situations;
- Device power management by scheduling of frame transmission and reception;
- Secure communication with data authentication and encryption using cryptographic algorithms;
- A mechanism for measuring the distance between two devices.

The architecture of this MAC service is fully distributed. All devices provide all required MAC functions and optional functions as determined by the application. No device acts as a central coordinator.

Coordination of devices within radio range is achieved by the exchange of beacon frames. Periodic beacon transmission enables device discovery, supports dynamic network organization, and provides support for mobility. Beacons provide the basic timing for the network and carry reservation and scheduling information for accessing the medium.

DRAFT 2009



Copyright International Organization for Standardization
Provided by IHS under license with ISO
No reproduction or networking permitted without license from IHS
Not for Resale

#### 7.2.4.1 Logical groups

The MAC protocol is specified with respect to an individual device, which has its own individual neighbourhood. All MAC protocol facilities are expressed with respect to this individual neighbourhood.

In a network formed with fully distributed medium access coordination, logical groups are formed around each device to facilitate contention-free frame exchanges while exploring medium reuse over different spatial regions. In this Standard, these logical groups are a beacon group and an extended beacon group, both of which are determined with respect to an individual device.

#### 7.2.4.2 Control algorithms

MAC protocol algorithms attempt to ensure that no member of the extended beacon group transmits a beacon frame at the same time as the device. Information included in beacon frames facilitates contention-free frame exchanges by ensuring that a device does not transmit frames while a neighbour is transmitting or receiving frames.

To permit correct frame reception, MAC protocol algorithms attempt to ensure that a device's DevAddr is unique within the device's extended beacon group.

#### 7.2.4.3 Channel selection

When a device is enabled, it scans one or more channels for beacons and selects a channel. If no beacons are detected in the selected channel, the device creates its beacon period (BP) by sending a beacon.

If one or more beacons are detected in the selected channel, the device synchronizes its BP to existing beacons in the selected channel. The device exchanges data with members of its beacon group using the same channel the device selected for beacons.

Each device operates in a dynamic environment and under unlicensed operation rules. Thus, it is subject to interference from licensed users, other networks, and other unlicensed wireless entities in its channel. To enable the device to continue operation in this type of environment, each device has the capability to dynamically change the channel in which it operates without requiring disruption of links with its peers.

If at any time a device determines that the current channel is unsuitable, it uses the dynamic channel selection procedure, as described in 17.10, to move to a new channel.

#### 7.2.4.4 Beacon period protection

Each device protects its and its neighbours' BPs for exclusive use of the beacon protocol. No transmissions other than beacons are attempted during the BP of any device. Protection of the device's BP is implicit.

A device may protect an alien BP, detected by reception of a beacon frame unaligned with the device's own BP, by announcing a reservation covering the alien BP in its beacon.

#### 7.2.4.5 The superframe

The basic timing structure for frame exchange is a superframe. The superframe duration is specified as mSuperframeLength. The superframe is composed of 256 medium access slots (MASs), where each MAS duration is mMASLength.

Each superframe starts with a BP, which extends over one or more contiguous MASs. The start of the first MAS in the BP, and the superframe, is called the beacon period start time (BPST).

DRAFT



Copyright International Organization for Standardization
Provided by IHS under license with ISO
No reproduction or networking permitted without license from IHS
Not for Resale

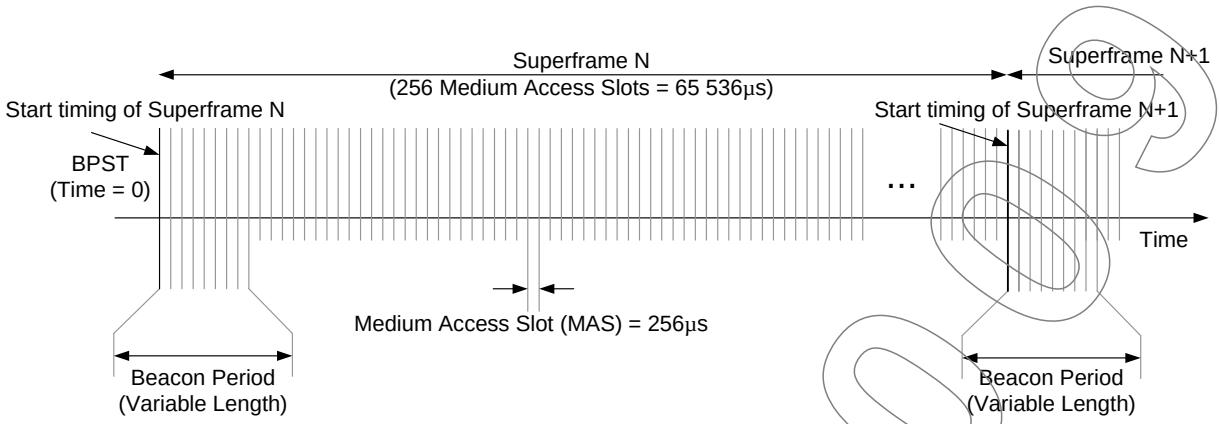


*Figure 3 - MAC superframe structure*

#### 7.2.4.6 Medium access

The medium is accessed in one of three ways:

- During the BP, devices send only beacon frames, according to the rules specified in 17.2.
- During reservations, devices participating in the reservation send frames according to rules specified in 17.4.
- Outside the BP and reservations, devices may send frames using a prioritized contention-based access method, as described in 17.3.

#### 7.2.4.7 Data communication between devices

Data is passed between the MAC sublayer and its client in MSDUs qualified by certain parameters. MSDUs are transported between devices in data frames. To reduce the frame error rate of a marginal link, data frames can be fragmented and reassembled, as described in 17.6. Fragments are numbered with an MSDU sequence number and a fragment number.

If the source device wishes to verify the delivery of a frame, then one of the acknowledgement policies is used, as described in 17.8. This Standard provides for three types of acknowledgements to enable different applications. The No-ACK policy, described in 17.8.1, is appropriate for frames that do not require guaranteed delivery, or are delay sensitive and a retransmitted frame would arrive too late. The Imm-ACK policy, described in 17.8.2, provides an acknowledgement process in which each frame is individually acknowledged following the reception of the frame. The B-ACK policy, described in 17.8.3, lets the source send multiple frames without intervening ACK frames. Instead, the acknowledgements of the individual frames are grouped into a single response frame that is sent when requested by the source device. The B-ACK process decreases the overhead of the Imm-ACK process while allowing the source device to verify the delivery of frames to the destination.

If the source device does not receive the requested acknowledgement, then it may retransmit the frame, as described in 17.3.7 and 17.4.10 or it may discard the frame. The decision to retransmit or discard the frame depends on the type of data or command that is being sent, the number of times that the source device has attempted to send the frame, the length of time it has attempted to send the frame, and other implementation-dependent factors.

#### 7.2.4.8 MAC frame data rates

MAC beacon frames are intended to be received and interpreted by all devices and hence their frame payloads are transmitted at pBeaconTransmitRate, which can be

DRAFT 2009



Copyright International Organization for Standardization
Provided by IHS under license with ISO
No reproduction or networking permitted without license from IHS
Not for Resale

decoded by all recipients. Other frames are exchanged in a more restricted context and their frame payloads may be transmitted at higher data rates if possible. Frame headers are always transmitted at the lowest data rate supported by the PHY.

#### 7.2.4.9 Security

Wireless networks present unique security challenges due to the loss of protection provided by wires and shielding. Distributed wireless networks present additional challenges due to the wide range of applications and use models that they must support. To name a few, eavesdroppers can overhear data exchanges not intended for them, whereas imposters can send forged data not using its own identity, can replay previously transmitted data, and can transmit modified data captured from a previous transmission.

This Standard (Clause 18) defines two levels of security: no security and strong security protection. Security protection includes data encryption, message integrity, and replay attack protection. Secure frames are used to provide security protection to data and aggregated data frames as well as selected control and command frames.

Three security modes are defined to control the level of security for devices in their communications. This Standard allows for a device to use one of the two security levels or a combination of them in communicating with other devices by selecting the appropriate security mode (18.2).

This Standard further specifies a 4-way handshake mechanism to enable two devices to derive their pair-wise temporal keys (PTKs) while authenticating their identity to each other. A secure relationship is established following a successful 4-way handshake between two devices (18.3.1). A 4-way handshake between two devices is conducted based on a shared master key. How two devices obtain their shared master keys is outside the scope of this Standard.

In addition, this Standard provides means for the solicitation and distribution of group temporal keys (GTKs). While PTKs are used for protecting unicast frames exchanged between two devices, GTKs are employed for protecting multicast and broadcast frames transmitted from a source device to a multicast or broadcast group of recipient devices (18.3.2).

A pseudo-random function (18.3.3) is defined based on the message integrity code (MIC) generation by CCM using AES-128 that is defined in ISO/IEC 18033-3:2005. It can be made available to entities outside the MAC sublayer for random number generation.

Secure frame counters and replay counters are set up on a per-temporal key basis to guarantee message freshness (18.4). No specific mechanisms are created in this Standard to address denial of service attacks given the open nature of the wireless medium.

In this Standard, 128-bit symmetric temporal keys are employed based on AES-128 with CCM to provide payload encryption and message integrity code (MIC) generation (18.5).

In general, this Standard specifies security mechanisms, not security policies.

#### 7.2.4.10 Information discovery

The protocols and facilities of this Standard are supported by the exchange of information between devices. Information can be broadcast in beacon frames or requested in Probe commands. For each type of information, an Information Element (IE) is defined. IEs can be included by a device in its beacon at any time and may optionally be requested or provided using the Probe command.

A device uses the MAC Capabilities IE and PHY Capabilities IE to announce information about its support of variable or optional facilities. Declaration of capabilities is especially useful when a device detects changes in its immediate neighbourhood.



Copyright International Organization for Standardization
Provided by IHS under license with ISO
No reproduction or networking permitted without license from IHS
Not for Resale

#### 7.2.4.11 Support for higher-layer timer synchronization

Some applications, for example, the transport and rendering of audio or video streams, require synchronization of timers located at different devices. Greater accuracy (in terms of jitter bounds) or finer timer granularity than that provided by the synchronization mechanism described in 17.5 may be an additional requirement. In support of such applications, this Standard defines an optional MAC facility that enables layers above the MAC sublayer to accurately synchronize timers located in different devices. The facility is usable by more than one application at a time.

#### 7.2.4.12 Rate adaptation

A mechanism for data rate adaptation is provided in 17.11. A receiver may use this mechanism to inform a transmitter of the optimal data rate to increase throughput and/or reduce the frame error rate (FER).

#### 7.2.4.13 Power management

An important goal of this Standard is to enable long operation time for battery powered devices. An effective method to extend battery life is to enable devices to turn off completely or reduce power for long periods of time, where a long period is relative to the superframe duration.

This Standard provides two power management modes in which a device can operate: active and hibernation. Devices in active mode transmit and receive beacons in every superframe. Devices in hibernation mode hibernate for multiple superframes and do not transmit or receive in those superframes.

In addition, this Standard provides facilities to support devices that sleep for portions of each superframe in order to save power.

To coordinate with neighbours, a device indicates its intention to hibernate by including a Hibernation Mode IE in its beacon. The Hibernation Mode IE specifies the number of superframes in which the device will sleep and will not send or receive beacons or any other frames.

Power management mechanisms are described in 17.13.

#### 7.2.4.14 Range measurement

A device may contain provisions to support one-dimensional ranging measurements between devices using two-way time transfer techniques. This Standard describes methods in the MAC sublayer to make range measurements in 17.15.

### 7.2.5 MUX sublayer

In order to enable the coexistence of concurrently active higher layer protocols within a single device, a multiplexing sublayer is defined. This sublayer routes outgoing and incoming MSDUs to and from their corresponding higher layers. The mandatory MUX sublayer is described in Annex A.

### 7.2.6 MAC policies

It is desirable to allow and facilitate equitable and efficient coexistence of devices with varying medium access requirements. For this purpose, Annex B specifies policies governing sharing of bandwidth. These policies impose, among other things, certain restrictions on the number and configuration of MASs in DRP reservations, and on the location of reserved MASs within a superframe.

### 7.2.7 Test vectors

To facilitate implementation and interoperability, Annex B provides examples of field encoding in MAC frames and the corresponding octet sequences passed to the PHY SAP. The examples include results from security operation and FCS calculation.

DRAFT ECMA-368



Copyright International Organization for Standardization
Provided by IHS under license with ISO
No reproduction or networking permitted without license from IHS
Not for Resale

# 8 PHY layer partitioning

This Clause describes the PHY services provided to the MAC. The PHY layer consists of two protocol functions:

a. A PHY convergence function, which adapts the capabilities of the physical medium dependent (PMD) device to the PHY service. This function is supported by the physical layer convergence protocol (PLCP), which defines a method of mapping the PLCP service data units (PSDU) into a framing format suitable for sending and receiving user data and management information between two or more stations using the associated PMD device.

b. A PMD device whose function defines the characteristics and method of transmitting and receiving data through a wireless medium between two or more stations, each using the Ecma PHY.

## 8.1 PHY function

The PHY contains three functional entities: the PMD function, the PHY convergence function, and the layer management function. The PHY service is provided to the MAC through the PHY service primitives.

## 8.2 PLCP sublayer

In order to allow the MAC to operate with minimum dependence on the PMD sublayer, the PHY convergence sublayer is defined. This function simplifies the PHY service interface to the MAC services.

## 8.3 PMD sublayer

The PMD sublayer provides a means to send and receive data between two or more stations.

## 8.4 PHY layer management entity (PLME)

The PLME performs management of the local PHY functions in conjunction with the MAC management entity.

# 9 Description of signal

## 9.1 Mathematical framework

The transmitted RF signal can be written in terms of the complex baseband signal as follows:

$$s_{RF}(t) = \mathrm{Re}\left\{ \sum_{n=0}^{N_{packet}-1} s_n(t - nT_{SYM}) \exp(j2\pi f_c(q(n))t) \right\}, \quad (1)$$

where $Re(\cdot)$ represents the real part of the signal, $T_{SYM}$ is the symbol length, $N_{packet}$ is the number of symbols in the packet, $f_c(m)$ is the centre frequency for the $m^{th}$ frequency band, $q(n)$ is a function that maps the $n^{th}$ symbol to the appropriate frequency band, and $s_n(t)$ is the complex baseband signal representation for the $n^{th}$ symbol, which must satisfy the following property: $s_n(t) = 0$ for $t \notin [0, T_{SYM})$. The exact structure of the $n^{th}$ symbol depends on its location within the packet:

DRAFT 2009



Copyright International Organization for Standardization
Provided by IHS under license with ISO
No reproduction or networking permitted without license from IHS
Not for Resale

$$s_n(t) = \begin{cases} s_{sync,\,n}(t) & 0 \le n < N_{sync} \\ s_{hdr,\,n-N_{sync}}(t) & N_{sync} \le n < N_{sync} + N_{hdr} \\ s_{frame,\,n-N_{sync}-N_{hdr}}(t) & N_{sync} + N_{hdr} \le n < N_{packet} \end{cases}, \quad (2)$$

where $s_{sync,n}(t)$ describes the $n^{th}$ symbol of the preamble, $s_{hdr,n}(t)$ describes the $n^{th}$ symbol of the header, $s_{frame,n}(t)$ describes the $n^{th}$ symbol of the PSDU, $N_{sync}$ is the number of symbols in the preamble, $N_{hdr}$ is the number of symbols contained in the header, and $N_{packet} = N_{frame} + N_{sync} + N_{hdr}$ is the number of symbols in the payload. The exact values of $N_{sync}$, $N_{hdr}$, $N_{frame}$, and $N_{packet}$ will be described in more detail in Clause 10.

The potentially complex time-domain signal $s_n(t)$ shall be created by passing the real and imaginary components of the discrete-time signal $s_n[k]$ through digital-to-analog converters (DACs) and anti-alias filters as defined in Figure 4. When the discrete-time signal $s_n[k]$ is real, only the real digital-to-analog converter and anti-aliasing filter need to be used. Clause 10 describes how to generate $s_n[k]$.

Figure 5 shows one realization of the transmitted RF signal using three frequency bands, where the first symbol is transmitted on a centre frequency of 3 432 MHz, the second symbol is transmitted on a centre frequency of 3 960 MHz, the third symbol is transmitted on a centre frequency of 4 488 MHz, the fourth symbol is transmitted on a centre frequency of 3 432 MHz, and so on. In addition, it is apparent from Figure 5 that the symbol is created by appending a zero-padded suffix (ZPS) to the IFFT output, or equivalently, to the OFDM symbol. The zero-padded suffix serves two purposes: it provides a mechanism to mitigate the effects of multi-path; and, it provides a time window (a guard interval) to allow sufficient time for the transmitter and receiver to switch between the different centre frequencies.

A symbol is defined as an OFDM symbol (IFFT output) plus a zero-padded suffix.

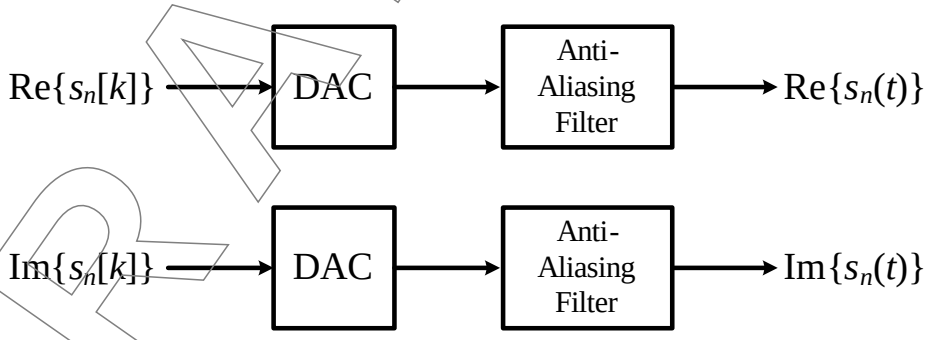


*Figure 4 - Conversion from discrete-time signals to continuous-time signals*

DRAFT



--`,,```,,,,````-`-`,,`,,`,`,,`---
Copyright International Organization for Standardization
Provided by IHS under license with ISO
No reproduction or networking permitted without license from IHS
Not for Resale

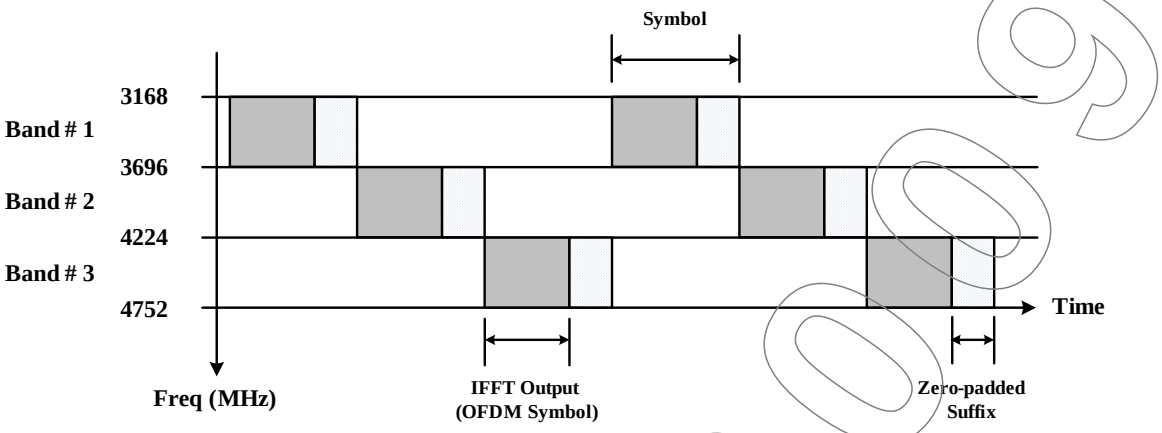


*Figure 5 - Example realization of a transmitted RF signal using three bands*

## 9.2 Tone-Nulling

In order to support avoidance of other users of the UWB band, the transmitted signal is sent in the context of a configured array TN of 384 tone-nulling elements. These correspond to the subcarriers of each band within the current band group, so that TN[0 to 127] apply to the subcarriers of the lowest frequency band in the current band group, TN[128 to 255] to the middle band, and TN[256 to 383] to the highest band, if present. See 11.1.2 for a description of bands and band groups.

Each tone-nulling element can take the value ONE or ZERO. If the value is ZERO, then the transmitter should take steps to minimize the transmitted signal energy at the frequency of the corresponding subcarrier. If the value is ONE, then the signal is unaffected by tone-nulling. No specific reduction in energy for any tone null is specified in this document. Tone-nulling is an optional feature. Tone-nulling applies to all symbols, including the preamble sequence.

A device shall transmit at least 86 useful tones per band, where useful tones relate to tones containing data, pilot, the preamble or the channel estimation sequence. This limit prevents unacceptable degradation of packet detection performance, and other receive performance. If more tones in a band must be avoided, the entire band cannot be used for transmission.

A device may null additional tones beyond those specified, for instance to improve or preserve symmetry within the transmitted symbols, subject to the constraint that at least 86 useful tones shall be transmitted per band. If additional tones are nulled then this shall be done consistently throughout the packet.

The simplest possible implementation is to set to zero the corresponding values of IFFT inputs, and to generate the sync symbols through the same IFFT process as other symbols.

# 10 PLCP sublayer

This Clause provides a method for converting a PSDU into a PPDU. During the transmission, the PSDU shall be pre-appended with a PLCP preamble and a PLCP header in order to create the PPDU. At the receiver, the PLCP preamble and PLCP header serve as aids in the demodulation, decoding, and delivery of the PSDU.

PRELIMINARY 2009



Copyright International Organization for Standardization
Provided by IHS under license with ISO
No reproduction or networking permitted without license from IHS
Not for Resale

## 10.1 PPDU

Figure 6 defines the format for the PPDU, which is composed of three components: the PLCP preamble, the PLCP header, and the PSDU. The components are listed in the order of transmission. The PLCP preamble is the first component of the PPDU and can be further decomposed into a packet/frame synchronization sequence, and a channel estimation sequence (see 10.2). The goal of the PLCP preamble is to aid the receiver in timing synchronization, carrier-offset recovery, and channel estimation.

The PLCP header is the second component of the PPDU. The goal of this component is to convey necessary information about both the PHY and the MAC to aid in decoding of the PSDU at the receiver. The PLCP header can be further decomposed into a PHY header, MAC header, header check sequence (HCS), tail bits, and Reed-Solomon parity bits (see 10.3). Tail bits are added between the PHY header and MAC header, HCS and Reed-Solomon parity bits, and at the end of the PLCP header in order to return the convolutional encoder to the “zero state”. The Reed-Solomon parity bits are added in order to improve the robustness of the PLCP header.

The PSDU is the last component of the PPDU (see 10.4). This component is formed by concatenating the frame payload with the frame check sequence (FCS), tail bits, and finally pad bits, which are inserted in order to align the data stream on the boundary of the symbol interleaver.

When transmitting the packet, the PLCP preamble is sent first, followed by the PLCP header, and finally by the PSDU. The PLCP header is a codeword of a systematic Reed-Solomon code, appended with tail bits as explained above. As defined in Figure 6, the systematic part of the PLCP header is always sent at a data rate of 39,4 Mb/s. The PSDU is sent at the desired data rate of 53,3 Mb/s, 80 Mb/s, 106,7 Mb/s, 160 Mb/s, 200 Mb/s, 320 Mb/s, 400 Mb/s or 480 Mb/s.

The least-significant bit (LSB) of an octet shall be the first bit transmitted.

DRAFT ISO



Copyright International Organization for Standardization
Provided by IHS under license with ISO
No reproduction or networking permitted without license from IHS
Not for Resale

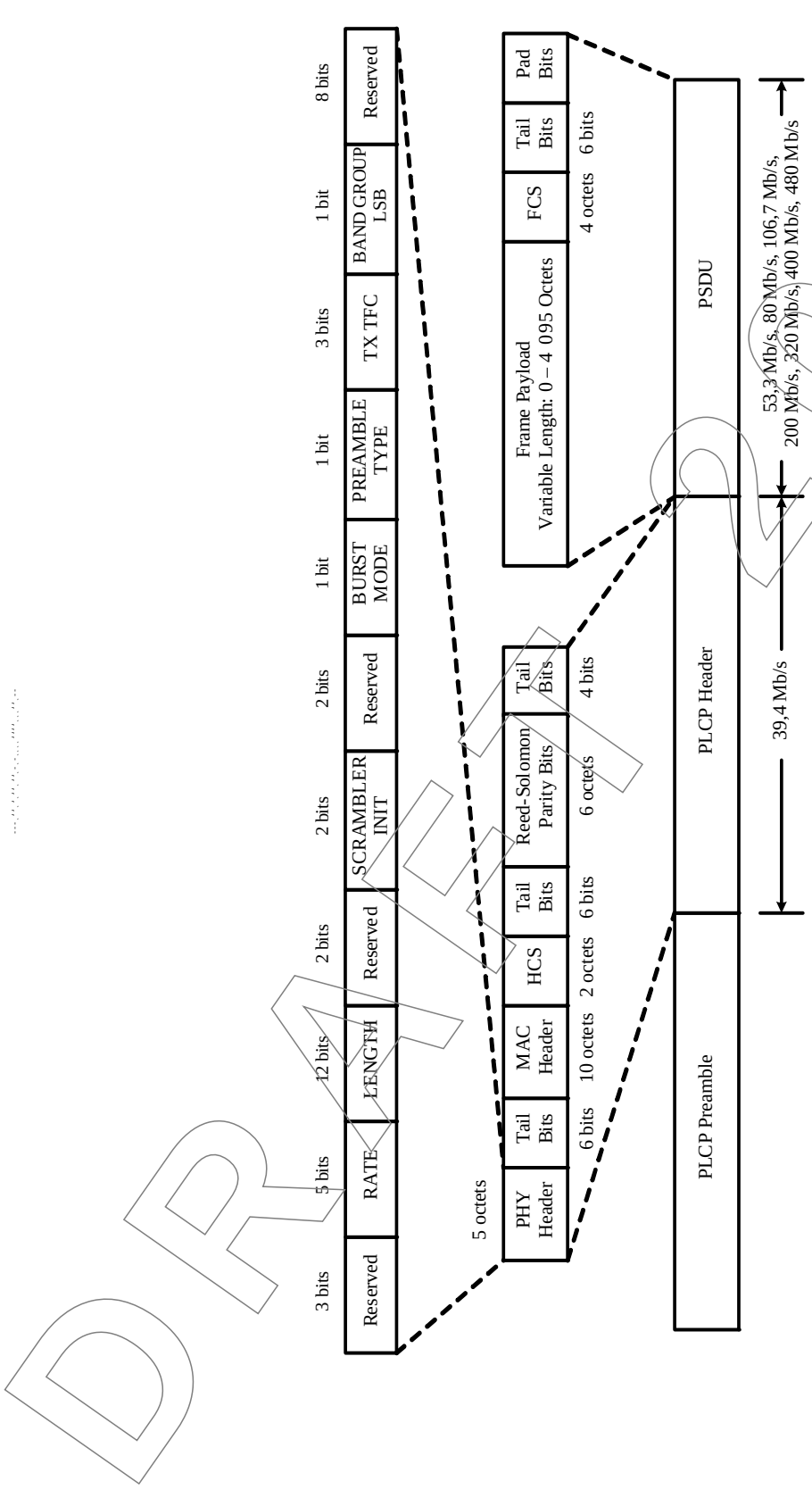


*Figure 6 - Standard PPDU structure*

DRAFT 2009



Copyright International Organization for Standardization
Provided by IHS under license with ISO
No reproduction or networking permitted without license from IHS
Not for Resale

### 10.1.1 PSDU rate-dependent parameters

The PSDU data rate-dependent modulation parameters are listed in Table 1.

Table 1 - PSDU rate-dependent Parameters

| Data Rate (Mb/s) | Modulation | Coding Rate (*R*) | FDS | TDS | Coded Bits / 6 OFDM Symbol ($N_{CBP6S}$) | Info Bits / 6 OFDM Symbol ($N_{IBP6S}$) |
|---|---|---|---|---|---|---|
| 53,3 | QPSK | 1/3 | YES | YES | 300 | 100 |
| 80 | QPSK | 1/2 | YES | YES | 300 | 150 |
| 106,7 | QPSK | 1/3 | NO | YES | 600 | 200 |
| 160 | QPSK | 1/2 | NO | YES | 600 | 300 |
| 200 | QPSK | 5/8 | NO | YES | 600 | 375 |
| 320 | DCM | 1/2 | NO | NO | 1 200 | 600 |
| 400 | DCM | 5/8 | NO | NO | 1 200 | 750 |
| 480 | DCM | 3/4 | NO | NO | 1 200 | 900 |

### 10.1.2 Timing-related parameters

The timing parameters associated with the OFDM PHY are listed in Table 2.

Table 2 - Timing-related Parameters

| Parameter | Description | Value |
|---|---|---|
| $f_s$ | Sampling frequency | 528 MHz |
| $N_{FFT}$ | Total number of subcarriers (FFT size) | 128 |
| $N_D$ | Number of data subcarriers | 100 |
| $N_P$ | Number of pilot subcarriers | 12 |
| $N_G$ | Number of guard subcarriers | 10 |
| $N_T$ | Total number of subcarriers used | 122 (= $N_D$ + $N_P$ + $N_G$) |
| $D_f$ | Subcarrier frequency spacing | 4,125 MHz (= $f_s / N_{FFT}$) |
| $T_{FFT}$ | IFFT and FFT period | 242,42 ns ($\Delta_f^{-1}$) |
| $N_{ZPS}$ | Number of samples in zero-padded suffix | 37 |
| $T_{ZPS}$ | Zero-padded suffix duration in time | 70,08 ns (= $N_{ZPS} / f_s$) |
| $T_{SYM}$ | Symbol interval | 312,5 ns (= $T_{FFT}$ + $T_{ZPS}$) |
| $F_{SYM}$ | Symbol rate | 3,2 MHz (= $T_{SYM}^{-1}$) |
| $N_{SYM}$ | Total number of samples per symbol | 165 (= $N_{FFT}$ + $N_{ZPS}$) |



Copyright International Organization for Standardization
Provided by IHS under license with ISO
No reproduction or networking permitted without license from IHS
Not for Resale

### 10.1.3 Frame-related parameters

The frame parameters associated with the PHY are listed in Table 3, where $\lceil \cdot \rceil$ is the ceiling function, which returns the smallest integer value greater than or equal to its argument.

Table 3 - Frame-related Parameters

| Parameter | Description | Value |
|---|---|---|
| $N_{pf}$ | Number of symbols in the packet/frame synchronization sequence | Standard Preamble: 24<br>Burst Preamble: 12 |
| $T_{pf}$ | Duration of the packet/frame synchronization sequence | Standard Preamble: 7,5 μs<br>Burst Preamble: 3,75 μs |
| $N_{ce}$ | Number of symbols in the channel estimation sequence | 6 |
| $T_{ce}$ | Duration of the channel estimation sequence | 1,875 μs |
| $N_{sync}$ | Number of symbols in the PLCP preamble | Standard Preamble: 30<br>Burst Preamble: 18 |
| $T_{sync}$ | Duration of the PLCP preamble | Standard Preamble: 9,375 μs<br>Burst Preamble: 5,625 μs |
| $N_{hdr}$ | Number of symbols in the PLCP header | 12 |
| $T_{hdr}$ | Duration of the PLCP header | 3,75 μs |
| $N_{frame}$ | Number of symbols in the PSDU | $6 \times \left\lceil \frac{8 \times \mathrm{LENGTH} + 38}{N_{IBP6S}} \right\rceil$ |
| $T_{frame}$ | Duration for the PSDU | $6 \times \left\lceil \frac{8 \times \mathrm{LENGTH} + 38}{N_{IBP6S}} \right\rceil \times T_{SYM}$ |
| $N_{packet}$ | Total number of symbols in the packet | $N_{sync}+N_{hdr}+N_{frame}$ |
| $T_{packet}$ | Duration of the packet | $(N_{sync}+N_{hdr}+N_{frame}) \times T_{SYM}$ |

## 10.2 PLCP preamble

A PLCP preamble shall be added prior to the PLCP header to aid the receiver in timing synchronization, carrier-offset recovery, and channel estimation. In this Clause both a Standard PLCP preamble and a burst PLCP preamble are defined. A unique preamble sequence shall be assigned to each time-frequency code (TFC).

The preamble is defined to be a real baseband signal, which shall be inserted into the real portion of the complex baseband signal. Tone-nulling (see 9.2), if implemented, is the applied. The PLCP preamble consists of two portions: a time-domain portion (packet/frame synchronization sequence) followed by a frequency-domain portion (channel estimation sequence).

In this Clause two preambles are defined: a Standard PLCP preamble and a burst PLCP preamble. The burst preamble shall only be used in the burst mode when a burst of packets is transmitted, separated by a minimum inter-frame separation time (pMIFS). For data rates of 200 Mb/s and lower, all the packets in the burst shall use the Standard PLCP preamble. However, for data rates higher than 200 Mb/s, the first packet shall use the Standard PLCP



--`,,```,,,,````-`-`,,`,,`,`,,`---
Copyright International Organization for Standardization
Provided by IHS under license with ISO
No reproduction or networking permitted without license from IHS
Not for Resale

preamble, while the remaining packets may use either the Standard PLCP preamble or the burst PLCP preamble. Support for transmission and reception of burst PLCP preamble is mandatory for all supported data rates above 200Mbps. The preamble type (PT) bit in the PHY header (see 10.3.1.5) describes the type of preamble that shall be used in the next packet.

### 10.2.1 Standard PLCP preamble

Figure 7 defines the structure of the Standard PLCP preamble. The preamble can be sub-divided into two distinct portions: a packet/frame synchronization sequence and a channel estimation sequence. The packet/frame synchronization sequence shall be constructed as defined in Figure 8:

1. For a given time-frequency code, select the appropriate base time-domain sequence $s_{base}[l]$ from Table 4 through Table 10 and the appropriate Standard cover sequence $s_{cover}[m]$ from Table 21.
2. Form an extended time-domain sequence $s_{ext}[l]$ by appending $N_{ZPS}$ "zero samples" to the length $N_{FFT}$ sequence $s_{base}[l]$.
3. The $k^{th}$ sample of the $n^{th}$ symbol in the Standard preamble $s_{sync,n}[k]$, corresponding to the packet/frame synchronization sequence, is given by:

$$s_{sync,n}[k] = s_{cover}[n] \times s_{ext}[k], \tag{3}$$

where $n \in [0,\ N_{pf} - 1]$, $k \in [0,\ N_{SYM} - 1]$, $N_{pf}$ is defined in Table 3 and $N_{SYM}$ is defined in Table 2.

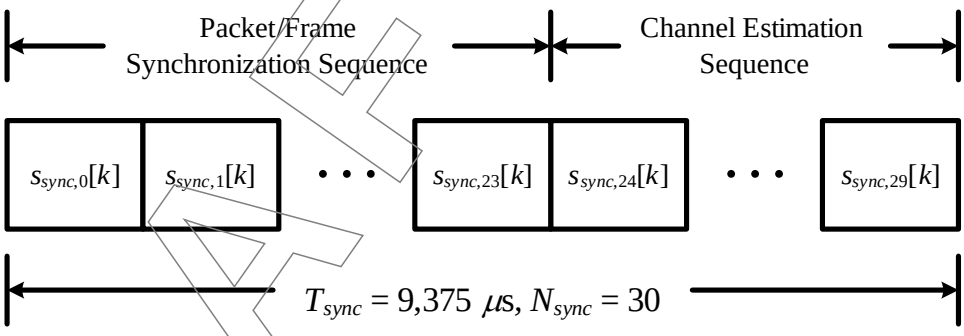


*Figure 7 - Block diagram of the Standard PLCP preamble*

DRAFT 2009



Copyright International Organization for Standardization
Provided by IHS under license with ISO
No reproduction or networking permitted without license from IHS
Not for Resale

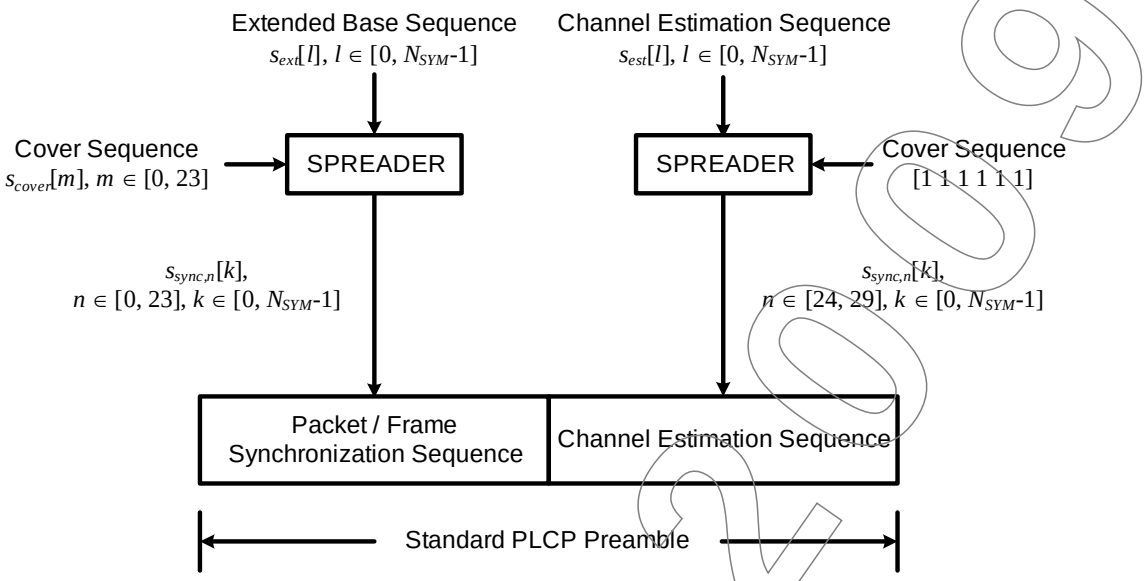


*Figure 8 - Block diagram of standard PLCP preamble construction*

The channel estimation sequence shall also be constructed as defined in Figure 8. A base channel estimation sequence $s_{est}[l]$ is created by taking the inverse discrete Fourier transform (IDFT) of the frequency-domain sequence defined in Table 23 and appending a zero-padded suffix consisting of $N_{ZPS}$ "zero samples" to the resulting time-domain output. The channel estimation sequence portion of the Standard preamble is created by successively appending $N_{ce}$ periods of the base estimation sequence, or equivalently, spreading the base channel estimation sequence with a sequence of [1 1 1 1 1 1]. Mathematically, the channel estimation sequence portion of the Standard preamble can be written as:

$$s_{sync,n}[k] = s_{est}[k], \tag{4}$$

where $n \in [N_{pf}, N_{sync} - 1]$, $k \in [0, N_{SYM} - 1]$, $N_{pf}$ is defined in Table 3 and $N_{SYM}$ is defined in Table 2.

The packet/frame synchronization sequence can be used for packet acquisition and detection, coarse carrier frequency estimation, coarse symbol timing, and for synchronization within the preamble. Whereas, the channel estimation sequence can be used for estimation of the channel frequency response, fine carrier frequency estimation, and fine symbol timing. The first sample of the first channel estimation symbol, $s_{sync,N_{pf}}[0]$, shall be used as the timing reference point for range measurements, as described in Clause 14.

The time-domain sequences in Table 4 through Table 10 and the frequency-domain channel estimation sequence defined in Table 23 should be normalized (as needed) to ensure that these sequences have the same average power as the PLCP header and the PSDU.



Copyright International Organization for Standardization
Provided by IHS under license with ISO
No reproduction or networking permitted without license from IHS
Not for Resale

### 10.2.2 Burst PLCP preamble

The burst PLCP preamble, which is defined in Figure 9, is similar in structure to the Standard PLCP preamble. This preamble can also be sub-divided into two distinct portions: a packet/frame synchronization sequence and a channel estimation sequence. The packet/frame synchronization sequence shall be constructed as defined in Figure 10:

1. For a given time-frequency code, select the appropriate base time-domain sequence $s_{base}[l]$ from Table 4 through Table 10 and the appropriate burst cover sequence $s_{cover}[m]$ from Table 22.
2. Form an extended time-domain sequence $s_{ext}[l]$ by appending $N_{ZPS}$ "zero samples" to the length $N_{FFT}$ sequence $s_{base}[l]$.
3. The $k^{th}$ sample of the $n^{th}$ symbol in the burst preamble $s_{sync,n}[k]$, corresponding to the packet/frame synchronization sequence, is given by:

$$s_{sync,n}[k] = s_{cover}[n] \times s_{ext}[k], \tag{5}$$

where $n \in [0, N_{pf} - 1]$, $k \in [0, N_{SYM} - 1]$, $N_{pf}$ is defined in Table 3 and $N_{SYM}$ is defined in Table 2.

The construction method used to create the channel estimation sequence portion of the burst preamble is identical to the method used to construct the channel estimation sequence portion of the Standard preamble. Mathematically, the channel estimation sequence portion of the burst preamble can be written as:

$$s_{sync,n}[k] = s_{est}[k], \tag{6}$$

where $n \in [N_{pf}, N_{sync} - 1]$, $k \in [0, N_{SYM} - 1]$, $N_{pf}$ is defined in Table 3 and $N_{SYM}$ is defined in Table 2.

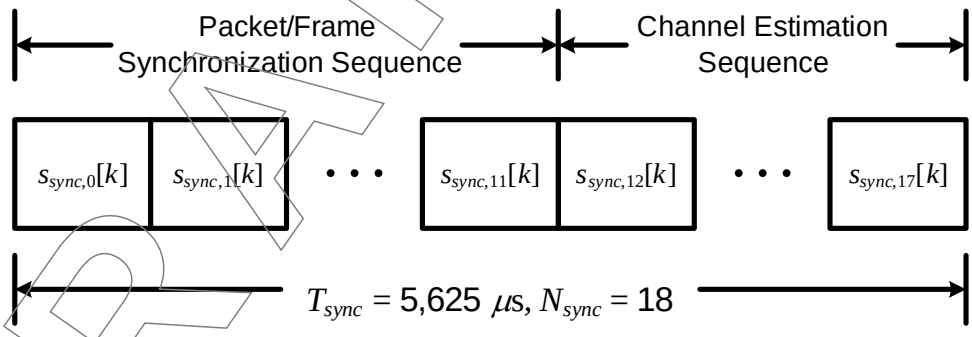


*Figure 9 - Block diagram of the burst PLCP preamble*

DRAFT



Copyright International Organization for Standardization
Provided by IHS under license with ISO
No reproduction or networking permitted without license from IHS
Not for Resale

The time-domain sequences for TF codes 1-7, defined in Table 4 through Table 10, have been spectrally flattened for a 4,125 MHz resolution bandwidth. The time-domain sequences for TF codes 8-10, defined in Table 11 through Table 13, have been flattened for a 1 MHz resolution bandwidth. Alternate base time-domain sequences for TF codes 1-7, which are flattened for a 1 MHz resolution bandwidth, are defined in Table 14 through Table 20. Devices using TF codes 1-7 shall use time-domain sequences in Table 4 through Table 10 or the sequences in Table 14 through Table 20.

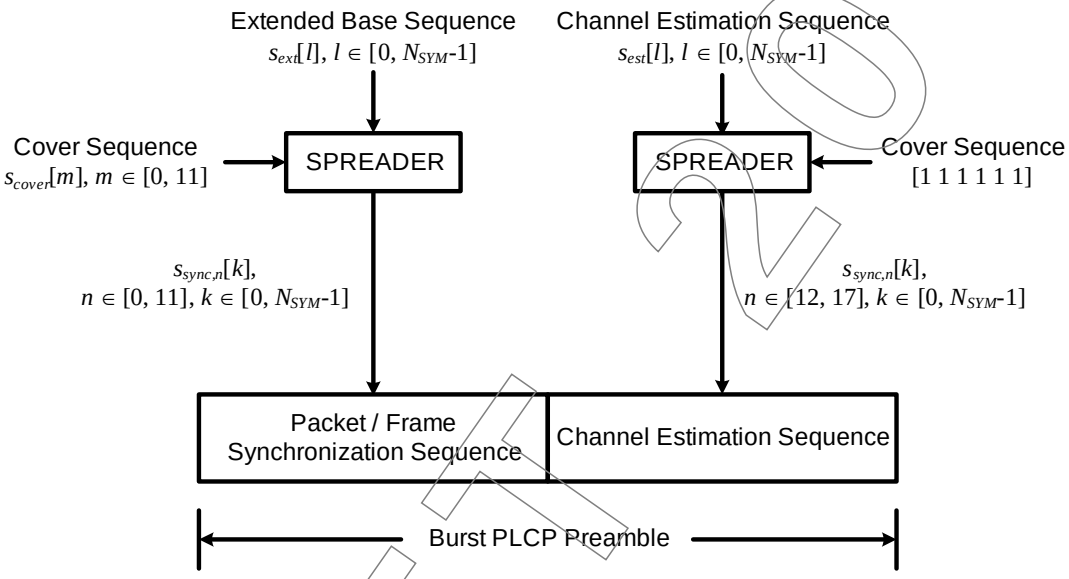


*Figure 10 - Block diagram of burst PLCP preamble construction*

DRAFT 2.0



Copyright International Organization for Standardization
Provided by IHS under license with ISO
No reproduction or networking permitted without license from IHS
Not for Resale

Table 4 - Base time-domain sequence for TF code 1

| $l$ | $s_{base}[l]$ | $l$ | $s_{base}[l]$ | $l$ | $s_{base}[l]$ | $l$ | $s_{base}[l]$ |
|---|---|---|---|---|---|---|---|
| 0 | 0,656 4 | 32 | -0,084 4 | 64 | -0,209 5 | 96 | 0,423 2 |
| 1 | -1,367 1 | 33 | 1,197 4 | 65 | 1,164 0 | 97 | -1,268 4 |
| 2 | -0,995 8 | 34 | 1,226 1 | 66 | 1,233 4 | 98 | -1,815 1 |
| 3 | -1,398 1 | 35 | 1,440 1 | 67 | 1,533 8 | 99 | -1,482 9 |
| 4 | 0,848 1 | 36 | -0,598 8 | 68 | -0,884 4 | 100 | 1,030 2 |
| 5 | 1,089 2 | 37 | -0,467 5 | 69 | -0,385 7 | 101 | 0,941 9 |
| 6 | -0,862 1 | 38 | 0,852 0 | 70 | 0,773 0 | 102 | -1,147 2 |
| 7 | 1,151 2 | 39 | -0,892 2 | 71 | -0,975 4 | 103 | 1,485 8 |
| 8 | 0,960 2 | 40 | -0,560 3 | 72 | -0,231 5 | 104 | -0,679 4 |
| 9 | -1,358 1 | 41 | 1,188 6 | 73 | 0,557 9 | 105 | 0,957 3 |
| 10 | -0,835 4 | 42 | 1,112 8 | 74 | 0,403 5 | 106 | 1,080 7 |
| 11 | -1,324 9 | 43 | 1,083 3 | 75 | 0,424 8 | 107 | 1,144 5 |
| 12 | 1,096 4 | 44 | -0,907 3 | 76 | -0,335 9 | 108 | -1,231 2 |
| 13 | 1,333 4 | 45 | -1,622 7 | 77 | -0,991 4 | 109 | -0,664 3 |
| 14 | -0,737 8 | 46 | 1,001 3 | 78 | 0,597 5 | 110 | 0,383 6 |
| 15 | 1,356 5 | 47 | -1,606 7 | 79 | -0,840 8 | 111 | -1,148 2 |
| 16 | 0,936 1 | 48 | 0,336 0 | 80 | 0,358 7 | 112 | -0,035 3 |
| 17 | -0,821 2 | 49 | -1,313 6 | 81 | -0,960 4 | 113 | -0,674 7 |
| 18 | -0,266 2 | 50 | -1,444 7 | 82 | -1,000 2 | 114 | -1,165 3 |
| 19 | -0,686 6 | 51 | -1,723 8 | 83 | -1,163 6 | 115 | -0,889 6 |
| 20 | 0,843 7 | 52 | 1,028 7 | 84 | 0,959 0 | 116 | 0,241 4 |
| 21 | 1,123 7 | 53 | 0,610 0 | 85 | 0,713 7 | 117 | 0,116 0 |
| 22 | -0,326 5 | 54 | -0,923 7 | 86 | -0,677 6 | 118 | -0,698 7 |
| 23 | 1,051 1 | 55 | 1,261 8 | 87 | 0,982 4 | 119 | 0,478 1 |
| 24 | 0,792 7 | 56 | 0,597 4 | 88 | -0,545 4 | 120 | 0,182 1 |
| 25 | -0,336 3 | 57 | -1,097 6 | 89 | 1,102 2 | 121 | -1,067 2 |
| 26 | -0,134 2 | 58 | -0,977 6 | 90 | 1,648 5 | 122 | -0,967 6 |
| 27 | -0,154 6 | 59 | -0,998 2 | 91 | 1,330 7 | 123 | -1,232 1 |
| 28 | 0,695 5 | 60 | 0,896 7 | 92 | -1,285 2 | 124 | 0,500 3 |
| 29 | 1,060 8 | 61 | 1,764 0 | 93 | -1,265 9 | 125 | 0,741 9 |
| 30 | -0,160 0 | 62 | -1,021 1 | 94 | 0,943 5 | 126 | -0,893 4 |
| 31 | 0,944 2 | 63 | 1,691 3 | 95 | -1,680 9 | 127 | 0,839 1 |



Copyright International Organization for Standardization
Provided by IHS under license with ISO
No reproduction or networking permitted without license from IHS
Not for Resale

Table 5 - Base time-domain sequence for TF code 2

| $l$ | $s_{base}[l]$ | $l$ | $s_{base}[l]$ | $l$ | $s_{base}[l]$ | $l$ | $s_{base}[l]$ |
|---|---|---|---|---|---|---|---|
| 0 | 0,967 9 | 32 | -1,290 5 | 64 | 1,528 0 | 96 | 0,519 3 |
| 1 | -1,018 6 | 33 | 1,104 0 | 65 | -0,919 3 | 97 | -0,343 9 |
| 2 | 0,488 3 | 34 | -1,240 8 | 66 | 1,124 6 | 98 | 0,142 8 |
| 3 | 0,543 2 | 35 | -0,806 2 | 67 | 1,262 2 | 99 | 0,625 1 |
| 4 | -1,470 2 | 36 | 1,542 5 | 68 | -1,440 6 | 100 | -1,046 8 |
| 5 | -1,450 7 | 37 | 1,095 5 | 69 | -1,492 9 | 101 | -0,579 8 |
| 6 | -1,175 2 | 38 | 1,428 4 | 70 | -1,150 8 | 102 | -0,823 7 |
| 7 | -0,073 0 | 39 | -0,459 3 | 71 | 0,412 6 | 103 | 0,266 7 |
| 8 | -1,244 5 | 40 | -1,040 8 | 72 | -1,046 2 | 104 | -0,956 4 |
| 9 | 0,314 3 | 41 | 1,054 2 | 73 | 0,723 2 | 105 | 0,601 6 |
| 10 | -1,395 1 | 42 | -0,444 6 | 74 | -1,157 4 | 106 | -0,996 4 |
| 11 | -0,969 4 | 43 | -0,792 9 | 75 | -0,710 2 | 107 | -0,354 1 |
| 12 | 0,456 3 | 44 | 1,673 3 | 76 | 0,850 2 | 108 | 0,396 5 |
| 13 | 0,307 3 | 45 | 1,756 8 | 77 | 0,626 0 | 109 | 0,520 1 |
| 14 | 0,640 8 | 46 | 1,327 3 | 78 | 0,953 0 | 110 | 0,473 3 |
| 15 | -0,979 8 | 47 | -0,246 5 | 79 | -0,497 1 | 111 | -0,236 2 |
| 16 | -1,411 6 | 48 | 1,685 0 | 80 | -0,863 3 | 112 | -0,689 2 |
| 17 | 0,603 8 | 49 | -0,709 1 | 81 | 0,691 0 | 113 | 0,478 7 |
| 18 | -1,386 0 | 50 | 1,139 6 | 82 | -0,363 9 | 114 | -0,260 5 |
| 19 | -1,088 8 | 51 | 1,511 4 | 83 | -0,887 4 | 115 | -0,588 7 |
| 20 | 1,103 6 | 52 | -1,434 3 | 84 | 1,531 1 | 116 | 0,941 1 |
| 21 | 0,706 7 | 53 | -1,500 5 | 85 | 1,154 6 | 117 | 0,736 4 |
| 22 | 1,166 7 | 54 | -1,257 2 | 86 | 1,193 5 | 118 | 0,671 4 |
| 23 | -1,022 5 | 55 | 0,827 4 | 87 | -0,293 0 | 119 | -0,174 6 |
| 24 | -1,247 1 | 56 | -1,514 0 | 88 | 1,328 5 | 120 | 1,177 6 |
| 25 | 0,778 8 | 57 | 1,142 1 | 89 | -0,723 1 | 121 | -0,880 3 |
| 26 | -1,271 6 | 58 | -1,013 5 | 90 | 1,283 2 | 122 | 1,254 2 |
| 27 | -0,874 5 | 59 | -1,065 7 | 91 | 0,787 8 | 123 | 0,511 1 |
| 28 | 1,217 5 | 60 | 1,407 3 | 92 | -0,809 5 | 124 | -0,820 9 |
| 29 | 0,841 9 | 61 | 1,819 6 | 93 | -0,746 3 | 125 | -0,897 5 |
| 30 | 1,288 1 | 62 | 1,167 9 | 94 | -0,897 3 | 126 | -0,909 1 |
| 31 | -0,821 0 | 63 | -0,413 1 | 95 | 0,556 0 | 127 | 0,256 2 |



Copyright International Organization for Standardization
Provided by IHS under license with ISO
No reproduction or networking permitted without license from IHS
Not for Resale

Table 6 - Base time-domain sequence for TF code 3

| $l$ | $s_{base}[l]$ | $l$ | $s_{base}[l]$ | $l$ | $s_{base}[l]$ | $l$ | $s_{base}[l]$ |
|---|---|---|---|---|---|---|---|
| 0 | 0,404 7 | 32 | -0,967 1 | 64 | -0,729 8 | 96 | 0,242 4 |
| 1 | 0,579 9 | 33 | -0,981 9 | 65 | -0,966 2 | 97 | 0,570 3 |
| 2 | -0,340 7 | 34 | 0,798 0 | 66 | 0,969 4 | 98 | -0,638 1 |
| 3 | 0,434 3 | 35 | -0,815 8 | 67 | -0,805 3 | 99 | 0,786 1 |
| 4 | 0,097 3 | 36 | -0,918 8 | 68 | -0,905 2 | 100 | 0,917 5 |
| 5 | -0,763 7 | 37 | 1,514 6 | 69 | 1,593 3 | 101 | -0,459 5 |
| 6 | -0,618 1 | 38 | 0,813 8 | 70 | 0,841 8 | 102 | -0,220 1 |
| 7 | -0,653 9 | 39 | 1,377 3 | 71 | 1,536 3 | 103 | -0,775 5 |
| 8 | 0,376 8 | 40 | 0,210 8 | 72 | 0,308 5 | 104 | -0,296 5 |
| 9 | 0,724 1 | 41 | 0,924 5 | 73 | 1,301 6 | 105 | -1,122 0 |
| 10 | -1,209 5 | 42 | -1,213 8 | 74 | -1,554 6 | 106 | 1,715 2 |
| 11 | 0,602 7 | 43 | 1,125 2 | 75 | 1,534 7 | 107 | -1,275 6 |
| 12 | 0,458 7 | 44 | 0,966 3 | 76 | 1,093 5 | 108 | -0,773 1 |
| 13 | -1,387 9 | 45 | -0,841 8 | 77 | -0,897 8 | 109 | 1,072 4 |
| 14 | -1,059 2 | 46 | -0,681 1 | 78 | -0,971 2 | 110 | 1,173 3 |
| 15 | -1,405 2 | 47 | -1,300 3 | 79 | -1,376 3 | 111 | 1,471 1 |
| 16 | -0,843 9 | 48 | -0,339 7 | 80 | -0,636 0 | 112 | 0,488 1 |
| 17 | -1,599 2 | 49 | -1,105 1 | 81 | -1,294 7 | 113 | 0,752 8 |
| 18 | 1,197 5 | 50 | 1,240 0 | 82 | 1,643 6 | 114 | -0,641 7 |
| 19 | -1,952 5 | 51 | -1,397 5 | 83 | -1,656 4 | 115 | 1,036 3 |
| 20 | -1,514 1 | 52 | -0,746 7 | 84 | -1,198 1 | 116 | 0,800 2 |
| 21 | 0,721 9 | 53 | 0,270 6 | 85 | 0,871 9 | 117 | -0,007 7 |
| 22 | 0,698 2 | 54 | 0,729 4 | 86 | 0,999 2 | 118 | -0,233 6 |
| 23 | 1,292 4 | 55 | 0,744 4 | 87 | 1,487 2 | 119 | -0,465 3 |
| 24 | -0,946 0 | 56 | -0,397 0 | 88 | -0,458 6 | 120 | 0,686 2 |
| 25 | -1,240 7 | 57 | -1,071 8 | 89 | -0,840 4 | 121 | 1,271 6 |
| 26 | 0,457 2 | 58 | 0,664 6 | 90 | 0,698 2 | 122 | -0,888 0 |
| 27 | -1,215 1 | 59 | -1,103 7 | 91 | -0,795 9 | 123 | 1,401 1 |
| 28 | -0,986 9 | 60 | -0,571 6 | 92 | -0,569 2 | 124 | 0,953 1 |
| 29 | 1,279 2 | 61 | 0,900 1 | 93 | 1,352 8 | 125 | -1,121 0 |
| 30 | 0,688 2 | 62 | 0,731 7 | 94 | 0,953 6 | 126 | -0,948 9 |
| 31 | 1,258 6 | 63 | 0,984 6 | 95 | 1,178 4 | 127 | -1,256 6 |



Copyright International Organization for Standardization
Provided by IHS under license with ISO
No reproduction or networking permitted without license from IHS
Not for Resale

Table 7 - Base time-domain sequence for TF code 4

| $l$ | $s_{base}[l]$ | $l$ | $s_{base}[l]$ | $l$ | $s_{base}[l]$ | $l$ | $s_{base}[l]$ |
|---|---|---|---|---|---|---|---|
| 0 | 1,154 9 | 32 | -1,238 5 | 64 | 1,309 5 | 96 | -1,009 4 |
| 1 | 1,007 9 | 33 | -0,788 3 | 65 | 0,667 5 | 97 | -0,759 8 |
| 2 | 0,735 6 | 34 | -0,795 4 | 66 | 1,258 7 | 98 | -1,078 6 |
| 3 | -0,743 4 | 35 | 1,087 4 | 67 | -0,999 3 | 99 | 0,669 9 |
| 4 | -1,393 0 | 36 | 1,149 1 | 68 | -1,005 2 | 100 | 0,981 3 |
| 5 | 1,281 8 | 37 | -1,478 0 | 69 | 0,660 1 | 101 | -0,556 3 |
| 6 | -1,103 3 | 38 | 0,887 0 | 70 | -1,022 8 | 102 | 1,054 8 |
| 7 | -0,252 3 | 39 | 0,469 4 | 71 | -0,748 9 | 103 | 0,892 5 |
| 8 | -0,790 5 | 40 | 1,506 6 | 72 | 0,508 6 | 104 | -1,365 6 |
| 9 | -0,426 1 | 41 | 1,126 6 | 73 | 0,156 3 | 105 | -0,847 2 |
| 10 | -0,939 0 | 42 | 0,993 5 | 74 | 0,067 3 | 106 | -1,311 0 |
| 11 | 0,434 5 | 43 | -1,246 2 | 75 | -0,837 5 | 107 | 1,189 7 |
| 12 | 0,443 3 | 44 | -1,786 9 | 76 | -1,074 6 | 108 | 1,512 7 |
| 13 | -0,307 6 | 45 | 1,746 2 | 77 | 0,445 4 | 109 | -0,747 4 |
| 14 | 0,564 4 | 46 | -1,488 1 | 78 | -0,783 1 | 110 | 1,467 8 |
| 15 | 0,257 1 | 47 | -0,409 0 | 79 | -0,362 3 | 111 | 1,029 5 |
| 16 | -1,003 0 | 48 | -1,469 4 | 80 | -1,365 8 | 112 | -0,921 0 |
| 17 | -0,782 0 | 49 | -0,792 3 | 81 | -1,085 4 | 113 | -0,478 4 |
| 18 | -0,406 4 | 50 | -1,460 7 | 82 | -1,492 3 | 114 | -0,502 2 |
| 19 | 0,903 5 | 51 | 0,911 3 | 83 | 0,423 3 | 115 | 1,215 3 |
| 20 | 1,540 6 | 52 | 0,845 4 | 84 | 0,674 1 | 116 | 1,578 3 |
| 21 | -1,461 3 | 53 | -0,886 6 | 85 | -1,015 7 | 117 | -0,771 8 |
| 22 | 1,274 5 | 54 | 0,885 2 | 86 | 0,830 4 | 118 | 1,238 4 |
| 23 | 0,371 5 | 55 | 0,491 8 | 87 | 0,487 8 | 119 | 0,669 5 |
| 24 | 1,813 4 | 56 | -0,609 6 | 88 | -1,499 2 | 120 | 0,882 1 |
| 25 | 0,943 8 | 57 | -0,432 2 | 89 | -1,188 4 | 121 | 0,780 8 |
| 26 | 1,313 0 | 58 | -0,132 7 | 90 | -1,400 8 | 122 | 1,053 7 |
| 27 | -1,307 0 | 59 | 0,495 3 | 91 | 0,779 5 | 123 | -0,079 1 |
| 28 | -1,346 2 | 60 | 0,970 2 | 92 | 1,292 6 | 124 | -0,284 5 |
| 29 | 1,686 8 | 61 | -0,866 7 | 93 | -1,204 9 | 125 | 0,579 0 |
| 30 | -1,215 3 | 62 | 0,680 3 | 94 | 1,293 4 | 126 | -0,466 4 |
| 31 | -0,677 8 | 63 | -0,024 4 | 95 | 0,812 3 | 127 | -0,109 7 |



Copyright International Organization for Standardization
Provided by IHS under license with ISO
No reproduction or networking permitted without license from IHS
Not for Resale

Table 8 - Base time-domain sequence for TF code 5

| $l$ | $s_{base}[l]$ | $l$ | $s_{base}[l]$ | $l$ | $s_{base}[l]$ | $l$ | $s_{base}[l]$ |
|---|---|---|---|---|---|---|---|
| 0 | 0,957 4 | 32 | 0,840 0 | 64 | 0,585 9 | 96 | -0,852 8 |
| 1 | 0,527 0 | 33 | 1,398 0 | 65 | 0,305 3 | 97 | -0,697 3 |
| 2 | 1,592 9 | 34 | 1,114 7 | 66 | 0,894 8 | 98 | -1,247 7 |
| 3 | -0,250 0 | 35 | -0,473 2 | 67 | -0,674 4 | 99 | 0,624 6 |
| 4 | -0,253 6 | 36 | -1,717 8 | 68 | -0,890 1 | 100 | 0,768 7 |
| 5 | -0,302 3 | 37 | -0,847 7 | 69 | -0,813 3 | 101 | 0,796 6 |
| 6 | 1,290 7 | 38 | 1,508 3 | 70 | 0,920 1 | 102 | -1,280 9 |
| 7 | -0,425 8 | 39 | -1,436 4 | 71 | -1,084 1 | 103 | 1,102 3 |
| 8 | 1,001 2 | 40 | 0,385 3 | 72 | -0,803 6 | 104 | 0,425 0 |
| 9 | 1,770 4 | 41 | 1,567 3 | 73 | -0,310 5 | 105 | -0,161 4 |
| 10 | 0,859 3 | 42 | 0,029 5 | 74 | -1,051 4 | 106 | 0,754 7 |
| 11 | -0,371 9 | 43 | -0,420 4 | 75 | 0,764 4 | 107 | -0,669 6 |
| 12 | -1,346 5 | 44 | -1,485 6 | 76 | 0,730 1 | 108 | -0,392 0 |
| 13 | -0,741 9 | 45 | -0,840 4 | 77 | 0,978 8 | 109 | -0,758 9 |
| 14 | 1,535 0 | 46 | 1,011 1 | 78 | -1,130 5 | 110 | 0,670 1 |
| 15 | -1,280 0 | 47 | -1,426 9 | 79 | 1,325 7 | 111 | -0,938 1 |
| 16 | 0,695 5 | 48 | 0,303 3 | 80 | 0,780 1 | 112 | -0,748 3 |
| 17 | 1,720 4 | 49 | 0,775 7 | 81 | 0,786 7 | 113 | -0,965 9 |
| 18 | 0,164 3 | 50 | -0,137 0 | 82 | 1,099 6 | 114 | -0,919 2 |
| 19 | -0,334 7 | 51 | -0,525 0 | 83 | -0,562 3 | 115 | 0,392 5 |
| 20 | -1,724 4 | 52 | -1,158 9 | 84 | -1,222 7 | 116 | 1,286 4 |
| 21 | -0,744 7 | 53 | -0,832 4 | 85 | -0,822 3 | 117 | 0,678 4 |
| 22 | 1,114 1 | 54 | 0,633 6 | 86 | 1,207 4 | 118 | -1,090 9 |
| 23 | -1,354 1 | 55 | -1,269 8 | 87 | -1,233 8 | 119 | 1,114 0 |
| 24 | -0,729 3 | 56 | -0,785 3 | 88 | 0,295 7 | 120 | -0,613 4 |
| 25 | 0,268 2 | 57 | -0,703 1 | 89 | 1,099 9 | 121 | -1,546 7 |
| 26 | -1,240 1 | 58 | -1,110 6 | 90 | -0,020 1 | 122 | -0,303 1 |
| 27 | 1,052 7 | 59 | 0,607 1 | 91 | -0,586 0 | 123 | 0,945 7 |
| 28 | 0,119 9 | 60 | 0,716 4 | 92 | -1,228 4 | 124 | 1,964 5 |
| 29 | 1,149 6 | 61 | 0,830 5 | 93 | -0,921 5 | 125 | 1,454 9 |
| 30 | -1,054 4 | 62 | -1,235 5 | 94 | 0,794 1 | 126 | -1,276 0 |
| 31 | 1,317 6 | 63 | 1,175 4 | 95 | -1,412 8 | 127 | 2,210 2 |



Copyright International Organization for Standardization
Provided by IHS under license with ISO
No reproduction or networking permitted without license from IHS
Not for Resale

Table 9 - Base time-domain sequence for TF code 6

| $l$ | $s_{base}[l]$ | $l$ | $s_{base}[l]$ | $l$ | $s_{base}[l]$ | $l$ | $s_{base}[l]$ |
|---|---|---|---|---|---|---|---|
| 0 | 1,294 7 | 32 | -0,997 3 | 64 | 1,070 3 | 96 | 0,951 6 |
| 1 | -0,818 8 | 33 | 0,854 8 | 65 | -0,862 5 | 97 | -1,259 3 |
| 2 | 0,900 7 | 34 | -0,696 3 | 66 | 0,698 6 | 98 | 0,459 4 |
| 3 | 0,778 6 | 35 | -0,687 4 | 67 | 1,098 9 | 99 | 1,303 8 |
| 4 | 0,630 1 | 36 | -0,501 5 | 68 | 0,460 0 | 100 | 0,109 0 |
| 5 | -0,128 3 | 37 | 0,700 3 | 69 | -0,655 9 | 101 | -0,508 2 |
| 6 | -0,797 2 | 38 | 0,358 2 | 70 | -0,608 7 | 102 | -1,818 1 |
| 7 | -0,389 7 | 39 | 0,577 2 | 71 | -0,420 6 | 103 | -0,774 7 |
| 8 | 1,179 4 | 40 | 0,742 1 | 72 | -0,845 4 | 104 | 0,767 8 |
| 9 | -1,259 2 | 41 | -0,676 6 | 73 | 1,031 7 | 105 | -1,534 2 |
| 10 | 0,813 6 | 42 | 0,624 2 | 74 | -0,762 4 | 106 | 0,491 4 |
| 11 | 0,887 2 | 43 | 0,424 1 | 75 | 0,061 9 | 107 | 0,719 7 |
| 12 | 0,579 7 | 44 | 0,589 1 | 76 | -0,731 1 | 108 | 0,335 3 |
| 13 | -1,230 4 | 45 | -0,904 5 | 77 | 1,363 4 | 109 | -1,583 2 |
| 14 | -0,562 8 | 46 | 0,162 5 | 78 | -0,137 9 | 110 | -0,994 7 |
| 15 | -0,827 2 | 47 | -0,510 5 | 79 | 0,840 1 | 111 | -1,032 9 |
| 16 | -1,541 8 | 48 | -1,418 7 | 80 | 1,637 1 | 112 | -1,966 9 |
| 17 | 1,280 4 | 49 | 1,516 9 | 81 | -1,020 1 | 113 | 0,994 6 |
| 18 | -1,152 4 | 50 | -0,958 0 | 82 | 0,924 3 | 114 | -1,327 3 |
| 19 | -0,984 6 | 51 | -1,123 7 | 83 | 2,093 1 | 115 | -1,557 2 |
| 20 | -0,917 8 | 52 | -0,678 2 | 84 | 0,451 1 | 116 | -0,874 6 |
| 21 | 1,183 4 | 53 | 1,355 7 | 85 | 0,076 8 | 117 | 0,057 9 |
| 22 | 0,429 3 | 54 | 1,022 9 | 86 | -1,797 4 | 118 | 1,226 9 |
| 23 | 0,902 1 | 55 | 0,949 0 | 87 | -0,468 5 | 119 | 0,449 7 |
| 24 | 1,115 2 | 56 | 1,630 8 | 88 | 1,472 7 | 120 | -1,475 1 |
| 25 | -0,982 8 | 57 | -0,932 5 | 89 | -1,338 7 | 121 | 1,389 7 |
| 26 | 0,789 1 | 58 | 1,146 1 | 90 | 0,777 9 | 122 | -0,992 2 |
| 27 | 0,939 1 | 59 | 1,167 5 | 91 | 2,008 0 | 123 | -1,295 0 |
| 28 | 0,594 4 | 60 | 0,816 3 | 92 | 0,302 6 | 124 | -0,683 9 |
| 29 | -0,837 6 | 61 | -0,155 1 | 93 | -0,426 3 | 125 | 1,211 3 |
| 30 | -0,532 0 | 62 | -0,865 7 | 94 | -1,975 1 | 126 | 1,055 9 |
| 31 | -0,633 5 | 63 | -0,369 6 | 95 | -0,842 1 | 127 | 0,814 7 |



Copyright International Organization for Standardization
Provided by IHS under license with ISO
No reproduction or networking permitted without license from IHS
Not for Resale

Table 10 - Base time-domain sequence for TF code 7

| $l$ | $s_{base}[l]$ | $l$ | $s_{base}[l]$ | $l$ | $s_{base}[l]$ | $l$ | $s_{base}[l]$ |
|---|---|---|---|---|---|---|---|
| 0 | 0,814 7 | 32 | -0,842 1 | 64 | -0,369 6 | 96 | -0,633 5 |
| 1 | 1,055 9 | 33 | -1,975 1 | 65 | -0,865 7 | 97 | -0,532 0 |
| 2 | 1,211 3 | 34 | -0,426 3 | 66 | -0,155 1 | 98 | -0,837 6 |
| 3 | -0,683 9 | 35 | 0,302 6 | 67 | 0,816 3 | 99 | 0,594 4 |
| 4 | -1,295 0 | 36 | 2,008 0 | 68 | 1,167 5 | 100 | 0,939 1 |
| 5 | -0,992 2 | 37 | 0,777 9 | 69 | 1,146 1 | 101 | 0,789 1 |
| 6 | 1,389 7 | 38 | -1,338 7 | 70 | -0,932 5 | 102 | -0,982 8 |
| 7 | -1,475 1 | 39 | 1,472 7 | 71 | 1,630 8 | 103 | 1,115 2 |
| 8 | 0,449 7 | 40 | -0,468 5 | 72 | 0,949 0 | 104 | 0,902 1 |
| 9 | 1,226 9 | 41 | -1,797 4 | 73 | 1,022 9 | 105 | 0,429 3 |
| 10 | 0,057 9 | 42 | 0,076 8 | 74 | 1,355 7 | 106 | 1,183 4 |
| 11 | -0,874 6 | 43 | 0,451 1 | 75 | -0,678 2 | 107 | -0,917 8 |
| 12 | -1,557 2 | 44 | 2,093 1 | 76 | -1,123 7 | 108 | -0,984 6 |
| 13 | -1,327 3 | 45 | 0,924 3 | 77 | -0,958 0 | 109 | -1,152 4 |
| 14 | 0,994 6 | 46 | -1,020 1 | 78 | 1,516 9 | 110 | 1,280 4 |
| 15 | -1,966 9 | 47 | 1,637 1 | 79 | -1,418 7 | 111 | -1,541 8 |
| 16 | -1,032 9 | 48 | 0,840 1 | 80 | -0,510 5 | 112 | -0,827 2 |
| 17 | -0,994 7 | 49 | -0,137 9 | 81 | 0,162 5 | 113 | -0,562 8 |
| 18 | -1,583 2 | 50 | 1,363 4 | 82 | -0,904 5 | 114 | -1,230 4 |
| 19 | 0,335 3 | 51 | -0,731 1 | 83 | 0,589 1 | 115 | 0,579 7 |
| 20 | 0,719 7 | 52 | 0,061 9 | 84 | 0,424 1 | 116 | 0,887 2 |
| 21 | 0,491 4 | 53 | -0,762 4 | 85 | 0,624 2 | 117 | 0,813 6 |
| 22 | -1,534 2 | 54 | 1,031 7 | 86 | -0,676 6 | 118 | -1,259 2 |
| 23 | 0,767 8 | 55 | -0,845 4 | 87 | 0,742 1 | 119 | 1,179 4 |
| 24 | -0,774 7 | 56 | -0,420 6 | 88 | 0,577 2 | 120 | -0,389 7 |
| 25 | -1,818 1 | 57 | -0,608 7 | 89 | 0,358 2 | 121 | -0,797 2 |
| 26 | -0,508 2 | 58 | -0,655 9 | 90 | 0,700 3 | 122 | -0,128 3 |
| 27 | 0,109 0 | 59 | 0,460 0 | 91 | -0,501 5 | 123 | 0,630 1 |
| 28 | 1,303 8 | 60 | 1,098 9 | 92 | -0,687 4 | 124 | 0,778 6 |
| 29 | 0,459 4 | 61 | 0,698 6 | 93 | -0,696 3 | 125 | 0,900 7 |
| 30 | -1,259 3 | 62 | -0,862 5 | 94 | 0,854 8 | 126 | -0,818 8 |
| 31 | 0,951 6 | 63 | 1,070 3 | 95 | -0,997 3 | 127 | 1,294 7 |



Copyright International Organization for Standardization
Provided by IHS under license with ISO
No reproduction or networking permitted without license from IHS
Not for Resale

Table 11 - Base time-domain sequence for TF code 8

| *l* | *sbase[l]* | *l* | *sbase[l]* | *l* | *sbase[l]* | *l* | *sbase[l]* |
|---|---|---|---|---|---|---|---|
| 0 | -1,541 8 | 32 | 1,599 1 | 64 | 1,272 4 | 96 | -1,085 3 |
| 1 | -1,869 3 | 33 | 0,981 5 | 65 | 1,182 6 | 97 | -1,157 8 |
| 2 | 0,737 6 | 34 | -0,397 2 | 66 | -1,062 4 | 98 | 0,500 2 |
| 3 | 0,705 3 | 35 | -0,635 9 | 67 | -0,870 3 | 99 | 0,783 7 |
| 4 | -0,389 4 | 36 | 0,995 2 | 68 | 0,678 5 | 100 | -0,540 0 |
| 5 | 0,151 3 | 37 | -0,720 2 | 69 | -0,960 8 | 101 | 0,428 9 |
| 6 | -0,880 5 | 38 | 0,776 5 | 70 | 0,480 1 | 102 | -0,610 1 |
| 7 | -0,377 9 | 39 | -0,565 1 | 71 | -0,794 7 | 103 | 0,417 0 |
| 8 | -1,961 0 | 40 | -0,850 1 | 72 | -0,835 3 | 104 | -1,676 4 |
| 9 | -2,446 4 | 41 | -0,726 7 | 73 | -0,782 2 | 105 | -1,307 0 |
| 10 | 1,854 8 | 42 | 0,799 5 | 74 | 0,495 3 | 106 | 1,419 8 |
| 11 | 1,366 2 | 43 | 0,710 0 | 75 | 0,506 8 | 107 | 1,120 1 |
| 12 | -0,356 1 | 44 | -0,365 7 | 76 | -0,389 2 | 108 | -1,063 0 |
| 13 | 0,681 6 | 45 | 1,182 5 | 77 | 0,345 5 | 109 | 1,633 5 |
| 14 | -0,874 5 | 46 | -0,220 9 | 78 | -0,337 1 | 110 | -0,419 7 |
| 15 | 0,145 1 | 47 | 0,913 3 | 79 | 0,232 7 | 111 | 1,450 9 |
| 16 | -1,292 6 | 48 | 1,355 6 | 80 | -0,401 3 | 112 | 1,400 5 |
| 17 | -1,922 8 | 49 | 1,378 1 | 81 | -0,382 6 | 113 | 1,318 7 |
| 18 | 2,112 7 | 50 | -0,867 7 | 82 | 0,422 4 | 114 | -1,205 1 |
| 19 | 1,323 3 | 51 | -0,601 8 | 83 | 0,122 6 | 115 | -1,234 3 |
| 20 | -0,149 2 | 52 | 0,749 4 | 84 | -0,253 4 | 116 | 0,635 4 |
| 21 | 0,852 0 | 53 | -1,151 0 | 85 | 0,504 9 | 117 | -0,932 8 |
| 22 | -0,309 7 | 54 | 0,385 6 | 86 | -0,047 4 | 118 | 0,556 5 |
| 23 | 0,618 9 | 55 | -0,823 5 | 87 | 0,319 7 | 119 | -0,883 4 |
| 24 | -0,492 3 | 56 | -1,225 2 | 88 | 1,722 4 | 120 | 0,627 8 |
| 25 | -0,970 4 | 57 | -0,861 1 | 89 | 1,415 6 | 121 | 0,559 1 |
| 26 | 1,804 2 | 58 | 0,908 0 | 90 | -1,265 0 | 122 | -0,975 9 |
| 27 | 0,807 6 | 59 | 0,931 2 | 91 | -1,249 4 | 123 | -0,744 2 |
| 28 | -0,041 8 | 60 | -0,848 6 | 92 | 0,955 6 | 124 | 0,416 7 |
| 29 | 1,186 9 | 61 | 1,274 6 | 93 | -1,622 7 | 125 | -1,174 9 |
| 30 | 0,246 4 | 62 | -0,450 0 | 94 | 0,454 0 | 126 | -0,086 5 |
| 31 | 1,049 1 | 63 | 1,081 8 | 95 | -1,370 0 | 127 | -1,138 2 |

DRAFT



Copyright International Organization for Standardization
Provided by IHS under license with ISO
No reproduction or networking permitted without license from IHS
Not for Resale

Table 12 - Base time-domain sequence for TF code 9

| *l* | *sbase[l]* | *l* | *sbase[l]* | *l* | *sbase[l]* | *l* | *sbase[l]* |
|---|---|---|---|---|---|---|---|
| 0 | -0,450 4 | 32 | 1,503 3 | 64 | 0,795 4 | 96 | 1,319 6 |
| 1 | -0,020 4 | 33 | 0,580 0 | 65 | 0,398 4 | 97 | 0,305 1 |
| 2 | 0,603 8 | 34 | -1,132 4 | 66 | -0,711 4 | 98 | -1,417 7 |
| 3 | 0,003 7 | 35 | 0,885 8 | 67 | 0,311 2 | 99 | 0,435 8 |
| 4 | 0,545 4 | 36 | -0,964 2 | 68 | -0,584 5 | 100 | -1,275 8 |
| 5 | 0,697 5 | 37 | -1,750 0 | 69 | -0,906 4 | 101 | -1,653 4 |
| 6 | 0,985 9 | 38 | -1,439 5 | 70 | -0,695 6 | 102 | -1,753 1 |
| 7 | -0,303 2 | 39 | 0,815 0 | 71 | 0,374 1 | 103 | 0,552 2 |
| 8 | 1,038 8 | 40 | -0,606 2 | 72 | -0,398 1 | 104 | -0,855 4 |
| 9 | 1,170 3 | 41 | -1,347 9 | 73 | -0,835 9 | 105 | -1,237 7 |
| 10 | -0,773 3 | 42 | 0,782 5 | 74 | 0,634 3 | 106 | 0,166 7 |
| 11 | 1,322 4 | 43 | -1,343 7 | 75 | -0,758 1 | 107 | -1,573 9 |
| 12 | -1,313 8 | 44 | 1,837 4 | 76 | 1,334 8 | 108 | 0,686 1 |
| 13 | -1,396 5 | 45 | 1,434 8 | 77 | 0,690 2 | 109 | 1,013 4 |
| 14 | -1,136 2 | 46 | 1,623 3 | 78 | 1,518 3 | 110 | -0,074 2 |
| 15 | 1,104 8 | 47 | -1,328 4 | 79 | -1,070 4 | 111 | -0,655 5 |
| 16 | -0,363 5 | 48 | 0,946 1 | 80 | 1,325 0 | 112 | -1,243 8 |
| 17 | -0,886 9 | 49 | 1,293 5 | 81 | 1,020 8 | 113 | -0,379 8 |
| 18 | 0,327 4 | 50 | -0,317 1 | 82 | -0,364 3 | 114 | 0,805 1 |
| 19 | -0,691 7 | 51 | 1,464 7 | 83 | 1,406 8 | 115 | -1,059 8 |
| 20 | 1,343 3 | 52 | -1,265 1 | 84 | -0,864 2 | 116 | 0,196 9 |
| 21 | 1,040 0 | 53 | -1,289 4 | 85 | -1,837 7 | 117 | 1,102 1 |
| 22 | 1,127 8 | 54 | -0,210 3 | 86 | 0,060 4 | 118 | 0,073 9 |
| 23 | -0,899 2 | 55 | 0,903 5 | 87 | 0,411 5 | 119 | -0,008 6 |
| 24 | 0,916 0 | 56 | 1,076 7 | 88 | 1,693 3 | 120 | -1,573 2 |
| 25 | 1,021 1 | 57 | 0,403 2 | 89 | 0,332 6 | 121 | -0,606 3 |
| 26 | -0,195 5 | 58 | -1,128 7 | 90 | -1,309 5 | 122 | 1,057 5 |
| 27 | 1,066 2 | 59 | 1,006 6 | 91 | 1,283 9 | 123 | -0,819 0 |
| 28 | -0,675 2 | 60 | -0,369 2 | 92 | -0,732 7 | 124 | 0,840 0 |
| 29 | -0,987 6 | 61 | -0,937 7 | 93 | -1,962 3 | 125 | 1,708 4 |
| 30 | 0,160 0 | 62 | -0,663 5 | 94 | -0,870 1 | 126 | 0,751 4 |
| 31 | 0,413 7 | 63 | 0,284 2 | 95 | 0,192 7 | 127 | -0,250 7 |



Copyright International Organization for Standardization
Provided by IHS under license with ISO
No reproduction or networking permitted without license from IHS
Not for Resale

Table 13 - Base time-domain sequence for TF code 10

| *l* | *sbase[l]* | *l* | *sbase[l]* | *l* | *sbase[l]* | *l* | *sbase[l]* |
|---|---|---|---|---|---|---|---|
| 0 | -0,809 9 | 32 | 1,028 7 | 64 | -0,091 1 | 96 | -0,704 8 |
| 1 | 0,816 6 | 33 | -1,775 5 | 65 | 0,038 7 | 97 | 0,163 2 |
| 2 | 0,398 2 | 34 | -2,049 8 | 66 | -0,458 7 | 98 | 1,589 6 |
| 3 | 0,825 9 | 35 | -1,220 7 | 67 | 0,142 6 | 99 | 1,053 1 |
| 4 | -0,763 4 | 36 | 1,113 5 | 68 | 0,737 7 | 100 | -1,793 1 |
| 5 | 0,160 7 | 37 | -1,505 3 | 69 | -0,685 3 | 101 | 0,573 8 |
| 6 | -0,649 1 | 38 | 0,700 0 | 70 | 0,152 5 | 102 | -1,422 5 |
| 7 | 0,006 2 | 39 | 1,746 8 | 71 | 0,818 2 | 103 | -1,475 1 |
| 8 | 0,339 3 | 40 | 0,528 4 | 72 | 1,092 1 | 104 | 0,682 5 |
| 9 | -1,080 1 | 41 | -0,089 1 | 73 | -0,464 2 | 105 | -1,705 3 |
| 10 | -1,385 2 | 42 | -1,588 6 | 74 | -1,231 7 | 106 | -1,138 5 |
| 11 | -0,541 0 | 43 | -0,876 9 | 75 | -1,270 4 | 107 | -1,284 0 |
| 12 | 0,663 0 | 44 | 1,466 2 | 76 | 1,869 0 | 108 | 0,291 5 |
| 13 | -1,148 5 | 45 | -0,545 1 | 77 | -0,557 7 | 109 | -1,058 3 |
| 14 | 0,113 1 | 46 | 1,070 8 | 78 | 1,686 5 | 110 | 0,393 5 |
| 15 | 1,172 7 | 47 | 1,476 5 | 79 | 1,141 3 | 111 | 0,771 8 |
| 16 | 0,822 7 | 48 | -0,832 1 | 80 | -0,564 0 | 112 | -0,086 3 |
| 17 | -0,429 8 | 49 | 1,271 6 | 81 | 1,686 9 | 113 | -0,459 3 |
| 18 | -1,778 5 | 50 | 0,387 8 | 82 | 1,690 4 | 114 | -0,853 3 |
| 19 | -1,382 6 | 51 | 1,135 1 | 83 | 1,388 6 | 115 | -0,223 6 |
| 20 | 1,538 5 | 52 | -0,477 3 | 84 | -0,604 9 | 116 | 0,330 8 |
| 21 | -0,579 1 | 53 | 0,423 9 | 85 | 1,370 8 | 117 | -0,670 4 |
| 22 | 1,416 8 | 54 | -0,720 4 | 86 | -0,530 6 | 118 | -0,172 9 |
| 23 | 1,144 5 | 55 | 0,116 2 | 87 | -1,365 7 | 119 | 0,740 0 |
| 24 | -1,294 2 | 56 | 0,465 7 | 88 | 0,040 4 | 120 | 0,220 6 |
| 25 | 1,520 8 | 57 | -0,564 4 | 89 | 0,411 1 | 121 | -0,182 5 |
| 26 | 1,332 4 | 58 | -1,311 7 | 90 | 1,228 4 | 122 | -1,356 7 |
| 27 | 1,542 7 | 59 | -0,656 9 | 91 | 0,348 9 | 123 | -0,694 7 |
| 28 | -1,066 3 | 60 | 0,590 8 | 92 | -1,041 0 | 124 | 0,658 6 |
| 29 | 0,365 6 | 61 | -0,639 9 | 93 | 1,100 2 | 125 | -0,306 6 |
| 30 | -1,089 1 | 62 | 0,663 8 | 94 | -0,246 7 | 126 | 0,482 3 |
| 31 | -0,434 0 | 63 | 1,218 3 | 95 | -1,372 0 | 127 | 0,876 6 |

DRAFT



Copyright International Organization for Standardization
Provided by IHS under license with ISO
No reproduction or networking permitted without license from IHS
Not for Resale

Table 14 - Alternate base time-domain sequence for TF code 1

| *l* | *sbase[l]* | *l* | *sbase[l]* | *l* | *sbase[l]* | *l* | *sbase[l]* |
|---|---|---|---|---|---|---|---|
| 0 | 0,720 5 | 32 | 0,054 5 | 64 | -0,227 3 | 96 | 0,379 9 |
| 1 | -1,552 6 | 33 | 1,048 5 | 65 | 1,104 4 | 97 | -1,174 6 |
| 2 | -1,260 4 | 34 | 1,181 0 | 66 | 1,158 1 | 98 | -1,701 1 |
| 3 | -1,564 0 | 35 | 1,358 3 | 67 | 1,521 1 | 99 | -1,431 9 |
| 4 | 0,972 3 | 36 | -0,535 5 | 68 | -0,895 4 | 100 | 0,966 6 |
| 5 | 1,366 4 | 37 | -0,366 3 | 69 | -0,352 3 | 101 | 0,796 3 |
| 6 | -1,068 0 | 38 | 0,805 2 | 70 | 0,741 1 | 102 | -1,071 0 |
| 7 | 1,428 1 | 39 | -0,835 7 | 71 | -0,926 7 | 103 | 1,327 7 |
| 8 | 0,972 2 | 40 | -0,514 7 | 72 | -0,315 7 | 104 | -0,675 4 |
| 9 | -1,368 0 | 41 | 1,141 6 | 73 | 0,666 7 | 105 | 0,907 4 |
| 10 | -0,820 3 | 42 | 1,116 5 | 74 | 0,471 0 | 106 | 1,069 9 |
| 11 | -1,297 5 | 43 | 1,027 9 | 75 | 0,490 8 | 107 | 1,087 0 |
| 12 | 1,035 9 | 44 | -0,880 0 | 76 | -0,410 6 | 108 | -1,195 6 |
| 13 | 1,398 5 | 45 | -1,653 8 | 77 | -1,072 5 | 109 | -0,727 8 |
| 14 | -0,781 3 | 46 | 0,994 9 | 78 | 0,631 5 | 110 | 0,427 0 |
| 15 | 1,338 8 | 47 | -1,629 9 | 79 | -0,926 8 | 111 | -1,194 4 |
| 16 | 1,046 2 | 48 | 0,247 4 | 80 | 0,467 0 | 112 | 0,051 9 |
| 17 | -1,054 8 | 49 | -1,196 4 | 81 | -1,165 5 | 113 | -0,737 2 |
| 18 | -0,491 7 | 50 | -1,310 9 | 82 | -1,218 4 | 114 | -1,162 6 |
| 19 | -0,897 3 | 51 | -1,610 9 | 83 | -1,327 9 | 115 | -0,921 0 |
| 20 | 0,961 4 | 52 | 0,900 0 | 84 | 1,113 6 | 116 | 0,377 9 |
| 21 | 1,297 4 | 53 | 0,419 1 | 85 | 0,953 1 | 117 | 0,177 5 |
| 22 | -0,489 5 | 54 | -0,834 1 | 86 | -0,813 9 | 118 | -0,631 0 |
| 23 | 1,2113 | 55 | 1,0763 | 87 | 1,2429 | 119 | 0,5395 |
| 24 | 0,9397 | 56 | 0,4772 | 88 | -0,4808 | 120 | 0,1006 |
| 25 | -0,5617 | 57 | -1,0323 | 89 | 1,0782 | 121 | -0,6751 |
| 26 | -0,2846 | 58 | -0,9790 | 90 | 1,6726 | 122 | -0,4944 |
| 27 | -0,2956 | 59 | -0,9650 | 91 | 1,3107 | 123 | -0,7774 |
| 28 | 0,8050 | 60 | 0,8004 | 92 | -1,2466 | 124 | 0,3183 |
| 29 | 1,2805 | 61 | 1,6412 | 93 | -1,1728 | 125 | 0,4327 |
| 30 | -0,2843 | 62 | -1,0196 | 94 | 0,9184 | 126 | -0,5049 |
| 31 | 1,0961 | 63 | 1,5773 | 95 | -1,6176 | 127 | 0,4425 |

DRAFT



Copyright International Organization for Standardization
Provided by IHS under license with ISO
No reproduction or networking permitted without license from IHS
Not for Resale

Table 15 - Alternate base time-domain sequence for TF code 2

| *l* | *sbase[l]* | *l* | *sbase[l]* | *l* | *sbase[l]* | *l* | *sbase[l]* |
|---|---|---|---|---|---|---|---|
| 0 | 0,808 0 | 32 | -1,357 7 | 64 | 1,574 2 | 96 | 0,512 7 |
| 1 | -0,858 1 | 33 | 1,104 1 | 65 | -1,014 4 | 97 | -0,418 3 |
| 2 | 0,410 3 | 34 | -1,263 9 | 66 | 1,133 5 | 98 | 0,136 9 |
| 3 | 0,375 0 | 35 | -0,829 2 | 67 | 1,298 4 | 99 | 0,617 9 |
| 4 | -1,145 3 | 36 | 1,555 8 | 68 | -1,581 0 | 100 | -1,128 7 |
| 5 | -1,203 7 | 37 | 1,135 2 | 69 | -1,624 1 | 101 | -0,649 2 |
| 6 | -0,910 0 | 38 | 1,455 2 | 70 | -1,227 0 | 102 | -0,842 0 |
| 7 | -0,138 3 | 39 | -0,475 8 | 71 | 0,383 4 | 103 | 0,197 1 |
| 8 | -0,910 3 | 40 | -0,982 1 | 72 | -1,222 5 | 104 | -0,981 6 |
| 9 | 0,121 1 | 41 | 1,027 7 | 73 | 0,841 8 | 105 | 0,606 6 |
| 10 | -1,080 7 | 42 | -0,431 4 | 74 | -1,357 3 | 106 | -1,118 0 |
| 11 | -0,798 4 | 43 | -0,753 7 | 75 | -0,845 7 | 107 | -0,402 0 |
| 12 | 0,277 5 | 44 | 1,572 6 | 76 | 1,000 6 | 108 | 0,392 6 |
| 13 | 0,053 4 | 45 | 1,721 6 | 77 | 0,811 4 | 109 | 0,463 3 |
| 14 | 0,441 9 | 46 | 1,240 9 | 78 | 1,147 8 | 110 | 0,511 7 |
| 15 | -0,888 5 | 47 | -0,211 7 | 79 | -0,571 5 | 111 | -0,304 1 |
| 16 | -1,406 6 | 48 | 1,626 2 | 80 | -0,811 7 | 112 | -0,915 6 |
| 17 | 0,581 5 | 49 | -0,667 7 | 81 | 0,719 9 | 113 | 0,597 2 |
| 18 | -1,386 9 | 50 | 1,115 7 | 82 | -0,321 3 | 114 | -0,437 6 |
| 19 | -1,099 4 | 51 | 1,461 4 | 83 | -0,887 7 | 115 | -0,795 9 |
| 20 | 1,091 4 | 52 | -1,385 2 | 84 | 1,568 8 | 116 | 1,187 9 |
| 21 | 0,675 0 | 53 | -1,359 6 | 85 | 1,198 4 | 117 | 0,981 7 |
| 22 | 1,158 7 | 54 | -1,163 2 | 86 | 1,176 0 | 118 | 0,942 4 |
| 23 | -1,043 6 | 55 | 0,809 0 | 87 | -0,248 2 | 119 | -0,316 8 |
| 24 | -1,349 9 | 56 | -1,202 3 | 88 | 1,469 5 | 120 | 1,279 4 |
| 25 | 0,845 2 | 57 | 1,005 6 | 89 | -0,849 4 | 121 | -0,850 0 |
| 26 | -1,359 5 | 58 | -0,810 6 | 90 | 1,453 4 | 122 | 1,264 8 |
| 27 | -0,936 7 | 59 | -0,895 5 | 91 | 0,887 5 | 123 | 0,608 9 |
| 28 | 1,311 1 | 60 | 1,166 8 | 92 | -0,955 6 | 124 | -0,825 9 |
| 29 | 0,897 8 | 61 | 1,618 6 | 93 | -0,921 2 | 125 | -0,954 4 |
| 30 | 1,337 7 | 62 | 0,932 7 | 94 | -1,075 1 | 126 | -0,937 3 |
| 31 | -0,842 0 | 63 | -0,313 3 | 95 | 0,606 1 | 127 | 0,345 4 |

DRAFT



Copyright International Organization for Standardization
Provided by IHS under license with ISO
No reproduction or networking permitted without license from IHS
Not for Resale

Table 16 - Alternate base time-domain sequence for TF code 3

| *l* | *sbase[l]* | *l* | *sbase[l]* | *l* | *sbase[l]* | *l* | *sbase[l]* |
|---|---|---|---|---|---|---|---|
| 0 | 0,484 2 | 32 | -1,036 8 | 64 | -0,749 8 | 96 | 0,292 2 |
| 1 | 0,776 1 | 33 | -1,058 0 | 65 | -1,040 8 | 97 | 0,650 5 |
| 2 | -0,455 5 | 34 | 0,795 7 | 66 | 1,112 1 | 98 | -0,723 8 |
| 3 | 0,641 1 | 35 | -0,816 0 | 67 | -0,893 1 | 99 | 0,833 9 |
| 4 | 0,232 9 | 36 | -0,852 2 | 68 | -1,019 1 | 100 | 0,923 1 |
| 5 | -0,921 0 | 37 | 1,680 5 | 69 | 1,678 1 | 101 | -0,688 5 |
| 6 | -0,757 2 | 38 | 0,962 6 | 70 | 0,839 7 | 102 | -0,369 0 |
| 7 | -0,815 4 | 39 | 1,457 5 | 71 | 1,654 4 | 103 | -0,920 6 |
| 8 | 0,384 6 | 40 | 0,253 5 | 72 | 0,158 3 | 104 | -0,252 6 |
| 9 | 0,672 6 | 41 | 0,934 7 | 73 | 1,215 0 | 105 | -1,099 8 |
| 10 | -1,027 0 | 42 | -1,167 6 | 74 | -1,537 7 | 106 | 1,728 9 |
| 11 | 0,454 9 | 43 | 1,188 7 | 75 | 1,487 0 | 107 | -1,364 2 |
| 12 | 0,293 6 | 44 | 1,097 9 | 76 | 0,997 7 | 108 | -0,934 3 |
| 13 | -1,397 7 | 45 | -0,738 5 | 77 | -0,752 6 | 109 | 0,948 9 |
| 14 | -1,020 9 | 46 | -0,566 2 | 78 | -0,930 2 | 110 | 1,075 4 |
| 15 | -1,268 6 | 47 | -1,275 6 | 79 | -1,243 8 | 111 | 1,461 9 |
| 16 | -0,791 5 | 48 | -0,249 7 | 80 | -0,667 7 | 112 | 0,480 8 |
| 17 | -1,518 5 | 49 | -1,020 3 | 81 | -1,303 6 | 113 | 0,823 0 |
| 18 | 1,084 6 | 50 | 1,199 2 | 82 | 1,721 9 | 114 | -0,909 0 |
| 19 | -1,913 5 | 51 | -1,229 1 | 83 | -1,717 1 | 115 | 1,090 2 |
| 20 | -1,517 2 | 52 | -0,553 1 | 84 | -1,259 9 | 116 | 0,799 8 |
| 21 | 0,650 1 | 53 | 0,257 7 | 85 | 0,884 6 | 117 | -0,188 4 |
| 22 | 0,640 4 | 54 | 0,784 8 | 86 | 1,025 3 | 118 | -0,351 7 |
| 23 | 1,247 0 | 55 | 0,697 2 | 87 | 1,541 2 | 119 | -0,605 6 |
| 24 | -1,002 5 | 56 | -0,067 2 | 88 | -0,460 7 | 120 | 0,672 4 |
| 25 | -1,319 8 | 57 | -0,666 1 | 89 | -0,896 2 | 121 | 1,187 4 |
| 26 | 0,512 4 | 58 | 0,402 0 | 90 | 0,846 5 | 122 | -0,893 7 |
| 27 | -1,301 7 | 59 | -0,728 4 | 91 | -0,909 2 | 123 | 1,234 2 |
| 28 | -1,058 1 | 60 | -0,243 8 | 92 | -0,670 0 | 124 | 0,862 8 |
| 29 | 1,403 4 | 61 | 0,575 5 | 93 | 1,378 7 | 125 | -1,105 9 |
| 30 | 0,784 4 | 62 | 0,491 9 | 94 | 0,979 7 | 126 | -0,856 4 |
| 31 | 1,376 1 | 63 | 0,614 4 | 95 | 1,240 7 | 127 | -1,188 7 |

DRAFT



Copyright International Organization for Standardization
Provided by IHS under license with ISO
No reproduction or networking permitted without license from IHS
Not for Resale

Table 17 - Alternate base time-domain sequence for TF code 4

| *l* | *sbase[l]* | *l* | *sbase[l]* | *l* | *sbase[l]* | *l* | *sbase[l]* |
|---|---|---|---|---|---|---|---|
| 0 | 0,942 3 | 32 | -1,005 4 | 64 | 1,325 4 | 96 | -0,968 7 |
| 1 | 0,787 9 | 33 | -0,672 2 | 65 | 0,764 0 | 97 | -0,724 5 |
| 2 | 0,563 4 | 34 | -0,628 5 | 66 | 1,428 5 | 98 | -1,030 7 |
| 3 | -0,587 3 | 35 | 0,948 1 | 67 | -0,986 5 | 99 | 0,640 9 |
| 4 | -1,103 8 | 36 | 0,989 5 | 68 | -1,016 8 | 100 | 0,935 5 |
| 5 | 0,996 1 | 37 | -1,371 7 | 69 | 0,691 0 | 101 | -0,469 3 |
| 6 | -0,861 1 | 38 | 0,727 0 | 70 | -1,069 7 | 102 | 1,032 3 |
| 7 | -0,171 3 | 39 | 0,364 0 | 71 | -0,770 7 | 103 | 0,930 0 |
| 8 | -0,609 3 | 40 | 1,504 4 | 72 | 0,797 4 | 104 | -1,427 2 |
| 9 | -0,320 9 | 41 | 1,105 5 | 73 | 0,353 0 | 105 | -0,854 4 |
| 10 | -0,768 2 | 42 | 0,952 6 | 74 | 0,274 1 | 106 | -1,407 2 |
| 11 | 0,330 1 | 43 | -1,303 8 | 75 | -1,072 8 | 107 | 1,275 8 |
| 12 | 0,316 6 | 44 | -1,856 8 | 76 | -1,382 3 | 108 | 1,529 2 |
| 13 | -0,156 5 | 45 | 1,791 1 | 77 | 0,750 2 | 109 | -0,794 1 |
| 14 | 0,402 8 | 46 | -1,518 1 | 78 | -1,081 9 | 110 | 1,506 0 |
| 15 | 0,190 9 | 47 | -0,390 8 | 79 | -0,535 4 | 111 | 1,105 2 |
| 16 | -1,030 3 | 48 | -1,693 6 | 80 | -1,579 3 | 112 | -0,866 8 |
| 17 | -0,746 2 | 49 | -0,943 1 | 81 | -1,217 7 | 113 | -0,407 1 |
| 18 | -0,412 3 | 50 | -1,686 6 | 82 | -1,612 4 | 114 | -0,506 1 |
| 19 | 0,915 7 | 51 | 1,059 8 | 83 | 0,522 1 | 115 | 1,187 0 |
| 20 | 1,491 8 | 52 | 1,029 6 | 84 | 0,852 9 | 116 | 1,466 0 |
| 21 | -1,388 6 | 53 | -1,061 6 | 85 | -1,174 5 | 117 | -0,730 6 |
| 22 | 1,216 7 | 54 | 1,090 1 | 86 | 0,993 5 | 118 | 1,152 4 |
| 23 | 0,378 8 | 55 | 0,613 1 | 87 | 0,509 1 | 119 | 0,663 2 |
| 24 | 1,695 3 | 56 | -0,630 7 | 88 | -1,407 9 | 120 | 0,857 7 |
| 25 | 0,911 6 | 57 | -0,458 3 | 89 | -1,164 9 | 121 | 0,773 3 |
| 26 | 1,267 0 | 58 | -0,146 6 | 90 | -1,266 2 | 122 | 0,980 3 |
| 27 | -1,203 2 | 59 | 0,546 4 | 91 | 0,732 9 | 123 | -0,123 5 |
| 28 | -1,222 2 | 60 | 1,047 6 | 92 | 1,308 0 | 124 | -0,345 9 |
| 29 | 1,584 7 | 61 | -0,873 5 | 93 | -1,176 9 | 125 | 0,663 1 |
| 30 | -1,079 1 | 62 | 0,658 9 | 94 | 1,255 5 | 126 | -0,526 2 |
| 31 | -0,621 8 | 63 | -0,071 7 | 95 | 0,758 0 | 127 | -0,139 5 |

DRAFT



Copyright International Organization for Standardization
Provided by IHS under license with ISO
No reproduction or networking permitted without license from IHS
Not for Resale

Table 18 - Alternate base time-domain sequence for TF code 5

| *l* | *sbase[l]* | *l* | *sbase[l]* | *l* | *sbase[l]* | *l* | *sbase[l]* |
|---|---|---|---|---|---|---|---|
| 0 | 0,780 5 | 32 | 0,953 5 | 64 | 0,580 6 | 96 | -0,873 9 |
| 1 | 0,599 4 | 33 | 1,154 5 | 65 | -0,048 3 | 97 | -0,369 7 |
| 2 | 1,439 2 | 34 | 1,248 8 | 66 | 1,033 7 | 98 | -1,300 3 |
| 3 | -0,049 2 | 35 | -0,520 4 | 67 | -0,732 5 | 99 | 0,725 3 |
| 4 | -0,306 2 | 36 | -1,576 9 | 68 | -0,660 4 | 100 | 0,460 1 |
| 5 | -0,111 9 | 37 | -0,840 0 | 69 | -0,721 5 | 101 | 0,768 0 |
| 6 | 1,131 8 | 38 | 1,498 2 | 70 | 0,841 7 | 102 | -1,228 5 |
| 7 | -0,237 9 | 39 | -1,389 5 | 71 | -0,883 9 | 103 | 0,953 8 |
| 8 | 1,031 0 | 40 | 0,320 6 | 72 | -0,750 7 | 104 | 0,327 3 |
| 9 | 1,988 8 | 41 | 1,517 5 | 73 | -0,351 0 | 105 | -0,084 8 |
| 10 | 0,996 9 | 42 | -0,161 2 | 74 | -0,904 8 | 106 | 0,612 9 |
| 11 | -0,284 8 | 43 | -0,497 1 | 75 | 0,691 8 | 107 | -0,672 7 |
| 12 | -1,435 0 | 44 | -1,556 1 | 76 | 0,860 1 | 108 | -0,482 7 |
| 13 | -0,718 9 | 45 | -0,850 2 | 77 | 0,893 3 | 109 | -0,787 0 |
| 14 | 1,715 6 | 46 | 1,057 5 | 78 | -1,163 2 | 110 | 0,783 8 |
| 15 | -1,344 0 | 47 | -1,485 2 | 79 | 1,322 7 | 111 | -1,052 2 |
| 16 | 0,458 2 | 48 | 0,295 9 | 80 | 0,802 4 | 112 | -0,547 2 |
| 17 | 1,635 8 | 49 | 0,644 0 | 81 | 0,758 7 | 113 | -1,000 2 |
| 18 | -0,157 4 | 50 | -0,265 5 | 82 | 1,268 8 | 114 | -0,615 5 |
| 19 | -0,105 9 | 51 | -0,650 2 | 83 | -0,452 5 | 115 | 0,378 0 |
| 20 | -1,378 3 | 52 | -1,106 0 | 84 | -1,153 3 | 116 | 1,491 3 |
| 21 | -0,583 5 | 53 | -0,937 3 | 85 | -0,812 5 | 117 | 0,665 2 |
| 22 | 0,907 6 | 54 | 0,452 5 | 86 | 1,129 1 | 118 | -0,995 8 |
| 23 | -1,153 4 | 55 | -1,319 1 | 87 | -1,175 2 | 119 | 1,114 6 |
| 24 | -0,804 7 | 56 | -1,120 1 | 88 | 0,356 8 | 120 | -0,442 1 |
| 25 | -0,148 1 | 57 | -1,248 6 | 89 | 1,305 5 | 121 | -1,421 3 |
| 26 | -1,349 8 | 58 | -1,427 9 | 90 | 0,160 4 | 122 | -0,132 4 |
| 27 | 1,113 0 | 59 | 0,739 3 | 91 | -0,509 9 | 123 | 0,694 3 |
| 28 | 0,487 8 | 60 | 1,176 8 | 92 | -1,480 4 | 124 | 1,781 6 |
| 29 | 1,227 5 | 61 | 1,073 5 | 93 | -0,961 0 | 125 | 1,114 4 |
| 30 | -1,197 5 | 62 | -1,730 1 | 94 | 0,942 5 | 126 | -0,884 9 |
| 31 | 1,461 6 | 63 | 1,605 8 | 95 | -1,540 2 | 127 | 1,708 3 |

DRAFT



Copyright International Organization for Standardization
Provided by IHS under license with ISO
No reproduction or networking permitted without license from IHS
Not for Resale

Table 19 - Alternate base time-domain sequence for TF code 6

| *l* | *sbase[l]* | *l* | *sbase[l]* | *l* | *sbase[l]* | *l* | *sbase[l]* |
|---|---|---|---|---|---|---|---|
| 0 | 0,808 0 | 32 | -0,490 3 | 64 | 1,080 4 | 96 | 0,908 0 |
| 1 | -0,511 6 | 33 | 0,444 2 | 65 | -1,022 3 | 97 | -1,172 2 |
| 2 | 0,520 4 | 34 | -0,379 9 | 66 | 0,706 0 | 98 | 0,443 1 |
| 3 | 0,633 7 | 35 | -0,235 7 | 67 | 1,102 4 | 99 | 1,300 4 |
| 4 | 0,367 1 | 36 | -0,295 3 | 68 | 0,531 2 | 100 | 0,031 3 |
| 5 | 0,054 2 | 37 | 0,532 7 | 69 | -0,826 3 | 101 | -0,469 7 |
| 6 | -0,688 7 | 38 | -0,039 4 | 70 | -0,565 3 | 102 | -1,834 6 |
| 7 | -0,187 5 | 39 | 0,387 1 | 71 | -0,529 9 | 103 | -0,757 3 |
| 8 | 0,930 9 | 40 | 0,778 3 | 72 | -1,135 7 | 104 | 0,769 3 |
| 9 | -1,028 9 | 41 | -0,764 1 | 73 | 1,257 6 | 105 | -1,553 3 |
| 10 | 0,657 7 | 42 | 0,599 8 | 74 | -0,921 9 | 106 | 0,501 8 |
| 11 | 0,774 0 | 43 | 0,616 3 | 75 | -0,263 2 | 107 | 0,691 7 |
| 12 | 0,478 5 | 44 | 0,541 0 | 76 | -0,824 6 | 108 | 0,338 4 |
| 13 | -1,095 5 | 45 | -0,986 7 | 77 | 1,433 9 | 109 | -1,667 3 |
| 14 | -0,413 4 | 46 | -0,045 6 | 78 | 0,160 2 | 110 | -1,005 6 |
| 15 | -0,723 8 | 47 | -0,546 5 | 79 | 0,951 7 | 111 | -1,092 2 |
| 16 | -1,624 9 | 48 | -1,529 5 | 80 | 1,531 9 | 112 | -1,825 8 |
| 17 | 1,376 9 | 49 | 1,605 5 | 81 | -0,868 0 | 113 | 0,854 5 |
| 18 | -1,191 6 | 50 | -1,098 9 | 82 | 0,868 7 | 114 | -1,213 4 |
| 19 | -1,091 0 | 51 | -0,988 8 | 83 | 1,950 8 | 115 | -1,533 5 |
| 20 | -0,927 2 | 52 | -0,803 2 | 84 | 0,418 9 | 116 | -0,731 2 |
| 21 | 1,177 1 | 53 | 1,595 5 | 85 | 0,253 2 | 117 | -0,034 2 |
| 22 | 0,554 9 | 54 | 0,854 6 | 86 | -1,635 0 | 118 | 1,259 6 |
| 23 | 0,901 3 | 55 | 1,036 4 | 87 | -0,321 2 | 119 | 0,359 0 |
| 24 | 1,219 4 | 56 | 1,947 4 | 88 | 1,588 2 | 120 | -1,403 7 |
| 25 | -1,015 5 | 57 | -1,248 3 | 89 | -1,337 6 | 121 | 1,329 5 |
| 26 | 0,831 0 | 58 | 1,352 3 | 90 | 0,877 1 | 122 | -0,897 7 |
| 27 | 1,000 3 | 59 | 1,471 4 | 91 | 2,103 3 | 123 | -1,374 1 |
| 28 | 0,642 9 | 60 | 0,959 4 | 92 | 0,330 0 | 124 | -0,581 6 |
| 29 | -0,691 4 | 61 | -0,426 3 | 93 | -0,378 0 | 125 | 1,148 1 |
| 30 | -0,610 8 | 62 | -1,191 5 | 94 | -1,998 1 | 126 | 1,181 5 |
| 31 | -0,602 9 | 63 | -0,615 1 | 95 | -0,817 2 | 127 | 0,770 2 |

DRAFT ECMA



Copyright International Organization for Standardization
Provided by IHS under license with ISO
No reproduction or networking permitted without license from IHS
Not for Resale

Table 20 - Alternate base time-domain sequence for TF code 7

| *l* | *sbase[l]* | *l* | *sbase[l]* | *l* | *sbase[l]* | *l* | *sbase[l]* |
|---|---|---|---|---|---|---|---|
| 0 | 0,770 2 | 32 | -0,817 2 | 64 | -0,615 1 | 96 | -0,602 9 |
| 1 | 1,181 5 | 33 | -1,998 1 | 65 | -1,191 5 | 97 | -0,610 8 |
| 2 | 1,148 1 | 34 | -0,378 0 | 66 | -0,426 3 | 98 | -0,691 4 |
| 3 | -0,581 6 | 35 | 0,330 0 | 67 | 0,959 4 | 99 | 0,642 9 |
| 4 | -1,374 1 | 36 | 2,103 3 | 68 | 1,471 4 | 100 | 1,000 3 |
| 5 | -0,897 7 | 37 | 0,877 1 | 69 | 1,352 3 | 101 | 0,831 0 |
| 6 | 1,329 5 | 38 | -1,337 6 | 70 | -1,248 3 | 102 | -1,015 5 |
| 7 | -1,403 7 | 39 | 1,588 2 | 71 | 1,947 4 | 103 | 1,219 4 |
| 8 | 0,359 0 | 40 | -0,321 2 | 72 | 1,036 4 | 104 | 0,901 3 |
| 9 | 1,259 6 | 41 | -1,635 0 | 73 | 0,854 6 | 105 | 0,554 9 |
| 10 | -0,034 2 | 42 | 0,253 2 | 74 | 1,595 5 | 106 | 1,177 1 |
| 11 | -0,731 2 | 43 | 0,418 9 | 75 | -0,803 2 | 107 | -0,927 2 |
| 12 | -1,533 5 | 44 | 1,950 8 | 76 | -0,988 8 | 108 | -1,091 0 |
| 13 | -1,213 4 | 45 | 0,868 7 | 77 | -1,098 9 | 109 | -1,191 6 |
| 14 | 0,854 5 | 46 | -0,868 0 | 78 | 1,605 5 | 110 | 1,376 9 |
| 15 | -1,825 8 | 47 | 1,531 9 | 79 | -1,529 5 | 111 | -1,624 9 |
| 16 | -1,092 2 | 48 | 0,951 7 | 80 | -0,546 5 | 112 | -0,723 8 |
| 17 | -1,005 6 | 49 | 0,160 2 | 81 | -0,045 6 | 113 | -0,413 4 |
| 18 | -1,667 3 | 50 | 1,433 9 | 82 | -0,986 7 | 114 | -1,095 5 |
| 19 | 0,338 4 | 51 | -0,824 6 | 83 | 0,541 0 | 115 | 0,478 5 |
| 20 | 0,691 7 | 52 | -0,263 2 | 84 | 0,616 3 | 116 | 0,774 0 |
| 21 | 0,501 8 | 53 | -0,921 9 | 85 | 0,599 8 | 117 | 0,657 7 |
| 22 | -1,553 3 | 54 | 1,257 6 | 86 | -0,764 1 | 118 | -1,028 9 |
| 23 | 0,769 3 | 55 | -1,135 7 | 87 | 0,778 3 | 119 | 0,930 9 |
| 24 | -0,757 3 | 56 | -0,529 9 | 88 | 0,387 1 | 120 | -0,187 5 |
| 25 | -1,834 6 | 57 | -0,565 3 | 89 | -0,039 4 | 121 | -0,688 7 |
| 26 | -0,469 7 | 58 | -0,826 3 | 90 | 0,532 7 | 122 | 0,054 2 |
| 27 | 0,031 3 | 59 | 0,531 2 | 91 | -0,295 3 | 123 | 0,367 1 |
| 28 | 1,300 4 | 60 | 1,102 4 | 92 | -0,235 7 | 124 | 0,633 7 |
| 29 | 0,443 1 | 61 | 0,706 0 | 93 | -0,379 9 | 125 | 0,520 4 |
| 30 | -1,172 2 | 62 | -1,022 3 | 94 | 0,444 2 | 126 | -0,511 6 |
| 31 | 0,908 0 | 63 | 1,080 4 | 95 | -0,490 3 | 127 | 0,808 0 |

DRAFT



Copyright International Organization for Standardization
Provided by IHS under license with ISO
No reproduction or networking permitted without license from IHS
Not for Resale

Table 21 - Cover sequence for Standard preamble

| $m$ | $s_{cover}[m]$ for TF codes 1,2 | $s_{cover}[m]$ for TF codes 3,4 | $s_{cover}[m]$ for TF codes 5,6,7 | $s_{cover}[m]$ for TF codes 8,9,10 |
|---|---|---|---|---|
| 0 | 1 | 1 | -1 | 1 |
| 1 | 1 | 1 | -1 | 1 |
| 2 | 1 | 1 | -1 | -1 |
| 3 | 1 | 1 | -1 | -1 |
| 4 | 1 | 1 | -1 | 1 |
| 5 | 1 | 1 | -1 | 1 |
| 6 | 1 | 1 | -1 | -1 |
| 7 | 1 | 1 | 1 | -1 |
| 8 | 1 | 1 | -1 | 1 |
| 9 | 1 | 1 | -1 | 1 |
| 10 | 1 | 1 | 1 | -1 |
| 11 | 1 | 1 | -1 | -1 |
| 12 | 1 | 1 | -1 | 1 |
| 13 | 1 | 1 | 1 | 1 |
| 14 | 1 | 1 | -1 | -1 |
| 15 | 1 | 1 | -1 | -1 |
| 16 | 1 | 1 | 1 | 1 |
| 17 | 1 | 1 | -1 | 1 |
| 18 | 1 | 1 | -1 | 1 |
| 19 | 1 | -1 | 1 | 1 |
| 20 | 1 | 1 | -1 | 1 |
| 21 | -1 | -1 | 1 | 1 |
| 22 | -1 | 1 | 1 | -1 |
| 23 | -1 | -1 | 1 | -1 |

DRAFT ECMA



Copyright International Organization for Standardization
Provided by IHS under license with ISO
No reproduction or networking permitted without license from IHS
Not for Resale

Table 22 - Cover sequence for burst preamble

| $m$ | $s_{cover}[m]$ for TF codes 1,2 | $s_{cover}[m]$ for TF codes 3,4 | $s_{cover}[m]$ for TF codes 5,6,7 | $s_{cover}[m]$ for TF codes 8,9,10 |
|---|---|---|---|---|
| 0 | 1 | 1 | -1 | 1 |
| 1 | 1 | 1 | -1 | 1 |
| 2 | 1 | 1 | -1 | -1 |
| 3 | 1 | 1 | 1 | -1 |
| 4 | 1 | 1 | 1 | 1 |
| 5 | 1 | 1 | -1 | 1 |
| 6 | 1 | 1 | -1 | 1 |
| 7 | 1 | -1 | 1 | 1 |
| 8 | 1 | 1 | -1 | 1 |
| 9 | -1 | -1 | 1 | 1 |
| 10 | -1 | 1 | 1 | -1 |
| 11 | -1 | -1 | 1 | -1 |

DRAFT ECMA



Copyright International Organization for Standardization
Provided by IHS under license with ISO
No reproduction or networking permitted without license from IHS
Not for Resale

Table 23 - Base frequency-domain channel estimation sequence

| Tone | Value | Tone | Value | Tone | Value | Tone | Value |
|---|---|---|---|---|---|---|---|
| -61 | $(-1+j)/\sqrt{2}$ | -30 | $(1-j)/\sqrt{2}$ | 1 | $(1+j)/\sqrt{2}$ | 32 | $(1+j)/\sqrt{2}$ |
| -60 | $(-1+j)/\sqrt{2}$ | -29 | $(-1+j)/\sqrt{2}$ | 2 | $(1+j)/\sqrt{2}$ | 33 | $(1+j)/\sqrt{2}$ |
| -59 | $(-1+j)/\sqrt{2}$ | -28 | $(-1+j)/\sqrt{2}$ | 3 | $(-1-j)/\sqrt{2}$ | 34 | $(-1-j)/\sqrt{2}$ |
| -58 | $(-1+j)/\sqrt{2}$ | -27 | $(1-j)/\sqrt{2}$ | 4 | $(1+j)/\sqrt{2}$ | 35 | $(-1-j)/\sqrt{2}$ |
| -57 | $(-1+j)/\sqrt{2}$ | -26 | $(1-j)/\sqrt{2}$ | 5 | $(-1-j)/\sqrt{2}$ | 36 | $(1+j)/\sqrt{2}$ |
| -56 | $(1-j)/\sqrt{2}$ | -25 | $(1-j)/\sqrt{2}$ | 6 | $(-1-j)/\sqrt{2}$ | 37 | $(-1-j)/\sqrt{2}$ |
| -55 | $(1-j)/\sqrt{2}$ | -24 | $(-1+j)/\sqrt{2}$ | 7 | $(1+j)/\sqrt{2}$ | 38 | $(1+j)/\sqrt{2}$ |
| -54 | $(-1+j)/\sqrt{2}$ | -23 | $(1-j)/\sqrt{2}$ | 8 | $(-1-j)/\sqrt{2}$ | 39 | $(1+j)/\sqrt{2}$ |
| -53 | $(1-j)/\sqrt{2}$ | -22 | $(1-j)/\sqrt{2}$ | 9 | $(1+j)/\sqrt{2}$ | 40 | $(1+j)/\sqrt{2}$ |
| -52 | $(1-j)/\sqrt{2}$ | -21 | $(1-j)/\sqrt{2}$ | 10 | $(-1-j)/\sqrt{2}$ | 41 | $(-1-j)/\sqrt{2}$ |
| -51 | $(1-j)/\sqrt{2}$ | -20 | $(-1+j)/\sqrt{2}$ | 11 | $(1+j)/\sqrt{2}$ | 42 | $(-1-j)/\sqrt{2}$ |
| -50 | $(1-j)/\sqrt{2}$ | -19 | $(1-j)/\sqrt{2}$ | 12 | $(1+j)/\sqrt{2}$ | 43 | $(1+j)/\sqrt{2}$ |
| -49 | $(1-j)/\sqrt{2}$ | -18 | $(-1+j)/\sqrt{2}$ | 13 | $(-1-j)/\sqrt{2}$ | 44 | $(1+j)/\sqrt{2}$ |
| -48 | $(-1+j)/\sqrt{2}$ | -17 | $(1-j)/\sqrt{2}$ | 14 | $(-1-j)/\sqrt{2}$ | 45 | $(-1-j)/\sqrt{2}$ |
| -47 | $(1-j)/\sqrt{2}$ | -16 | $(1-j)/\sqrt{2}$ | 15 | $(-1-j)/\sqrt{2}$ | 46 | $(-1-j)/\sqrt{2}$ |
| -46 | $(-1+j)/\sqrt{2}$ | -15 | $(-1+j)/\sqrt{2}$ | 16 | $(1+j)/\sqrt{2}$ | 47 | $(1+j)/\sqrt{2}$ |
| -45 | $(-1+j)/\sqrt{2}$ | -14 | $(-1+j)/\sqrt{2}$ | 17 | $(1+j)/\sqrt{2}$ | 48 | $(-1-j)/\sqrt{2}$ |
| -44 | $(1-j)/\sqrt{2}$ | -13 | $(-1+j)/\sqrt{2}$ | 18 | $(-1-j)/\sqrt{2}$ | 49 | $(1+j)/\sqrt{2}$ |
| -43 | $(1-j)/\sqrt{2}$ | -12 | $(1-j)/\sqrt{2}$ | 19 | $(1+j)/\sqrt{2}$ | 50 | $(1+j)/\sqrt{2}$ |
| -42 | $(-1+j)/\sqrt{2}$ | -11 | $(1-j)/\sqrt{2}$ | 20 | $(-1-j)/\sqrt{2}$ | 51 | $(1+j)/\sqrt{2}$ |
| -41 | $(-1+j)/\sqrt{2}$ | -10 | $(-1+j)/\sqrt{2}$ | 21 | $(1+j)/\sqrt{2}$ | 52 | $(1+j)/\sqrt{2}$ |
| -40 | $(1-j)/\sqrt{2}$ | -9 | $(1-j)/\sqrt{2}$ | 22 | $(1+j)/\sqrt{2}$ | 53 | $(1+j)/\sqrt{2}$ |
| -39 | $(1-j)/\sqrt{2}$ | -8 | $(-1+j)/\sqrt{2}$ | 23 | $(1+j)/\sqrt{2}$ | 54 | $(-1-j)/\sqrt{2}$ |
| -38 | $(1-j)/\sqrt{2}$ | -7 | $(1-j)/\sqrt{2}$ | 24 | $(-1-j)/\sqrt{2}$ | 55 | $(1+j)/\sqrt{2}$ |
| -37 | $(-1+j)/\sqrt{2}$ | -6 | $(-1+j)/\sqrt{2}$ | 25 | $(1+j)/\sqrt{2}$ | 56 | $(1+j)/\sqrt{2}$ |
| -36 | $(1-j)/\sqrt{2}$ | -5 | $(-1+j)/\sqrt{2}$ | 26 | $(1+j)/\sqrt{2}$ | 57 | $(-1-j)/\sqrt{2}$ |
| -35 | $(-1+j)/\sqrt{2}$ | -4 | $(1-j)/\sqrt{2}$ | 27 | $(1+j)/\sqrt{2}$ | 58 | $(-1-j)/\sqrt{2}$ |
| -34 | $(-1+j)/\sqrt{2}$ | -3 | $(-1+j)/\sqrt{2}$ | 28 | $(-1-j)/\sqrt{2}$ | 59 | $(-1-j)/\sqrt{2}$ |
| -33 | $(1-j)/\sqrt{2}$ | -2 | $(1-j)/\sqrt{2}$ | 29 | $(-1-j)/\sqrt{2}$ | 60 | $(-1-j)/\sqrt{2}$ |
| -32 | $(1-j)/\sqrt{2}$ | -1 | $(1-j)/\sqrt{2}$ | 30 | $(1+j)/\sqrt{2}$ | 61 | $(-1-j)/\sqrt{2}$ |
| -31 | $(1-j)/\sqrt{2}$ | | | 31 | $(1+j)/\sqrt{2}$ | | |



Copyright International Organization for Standardization
Provided by IHS under license with ISO
No reproduction or networking permitted without license from IHS
Not for Resale

## 10.3 PLCP header

A PLCP header shall be added after the PLCP preamble to convey information about both the PHY and the MAC that is needed at the receiver in order to successfully decode the PSDU. The scrambled and Reed-Solomon encoded PLCP header shall be formed as defined in Figure 11:

1. Format the PHY header based on information provided by the MAC.
2. Calculate the HCS value (2 octets) over the combined PHY and MAC headers.
3. The resulting HCS value is appended to the MAC header. The resulting combination (MAC Header + HCS) is scrambled according to 10.5.
4. Apply a shortened Reed-Solomon code (23,17) to the concatenation of the PHY header (5 octets), scrambled MAC header and HCS (12 octets).
5. Insert 6 tail bits after the PHY header, 6 tail bits after the scrambled MAC header and HCS, and append the 6 parity octets and 4 tail bits at the end to form the scrambled and Reed-Solomon encoded PLCP header.

The resulting scrambled and Reed-Solomon encoded PLCP header is encoded, as defined in Figure 12, using a $R$ = 1/3, $K$ = 7 convolutional code (see 10.7), interleaved using a bit interleaver (see 10.8), mapped onto a QPSK constellation (see 10.9), and finally, the resulting complex values are loaded onto the data subcarriers for the IDFT (see 10.10) in order to create the baseband signal. Tone-nulling (see 9.2), if implemented, is the applied.

### 10.3.1 PHY header

The PHY header contains information about the data rate of the MAC frame body, the length of the frame payload (which does not include the FCS), the seed identifier for the data scrambler, and information about the next packet – whether it is being sent in burst mode and whether it employs a burst preamble or not.

The PHY header field shall be composed of 40 bits, numbered from 0 to 39 as defined in Figure 13. Bits 3-7 shall encode the RATE field, which conveys the information about the type of modulation, the coding rate, and the spreading factor used to transmit the MAC frame body. Bits 8-19 shall encode the LENGTH field, with the least-significant bit being transmitted first. Bits 22-23 shall encode the seed value for the initial state of the scrambler, which is used to synchronize the descrambler of the receiver. Bit 26 shall encode whether or not the packet is being transmitted in burst mode. Bit 27 shall encode the preamble type (Standard or burst preamble) used in the next packet if in burst mode. Bits 28-30 shall be used to indicate the lower 3 LSBs of the TFC (T1 - T3) used at the transmitter. Bit 31 shall be used to indicate the LSB of the band group used at the transmitter. Bit 34 shall be used to indicate the MSB of the TFC (T4) used at the transmitter. All other bits which are not defined in this Clause shall be understood to be reserved for future use and shall be set to ZERO.The receiver shall ignore reserved bits on receive. The receiver shall not assume that reserved bits are ZERO on receive, for instance to assist the Viterbi algorithm or to decode the RATE quickly.

DRAFT



Copyright International Organization for Standardization
Provided by IHS under license with ISO
No reproduction or networking permitted without license from IHS
Not for Resale

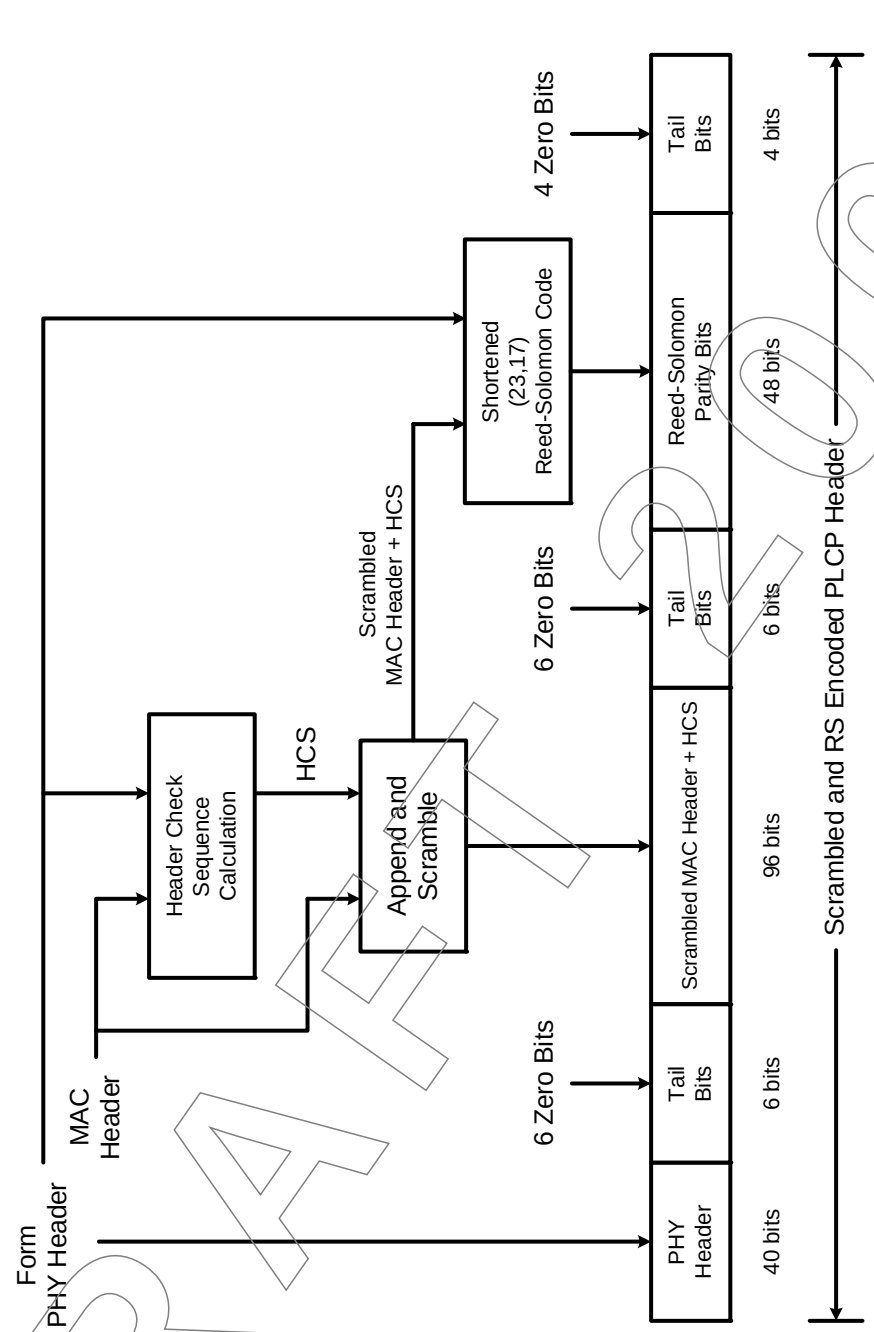


*Figure 11 - Block diagram of PLCP header construction*

DRAFT 2009



Copyright International Organization for Standardization
Provided by IHS under license with ISO
No reproduction or networking permitted without license from IHS
Not for Resale

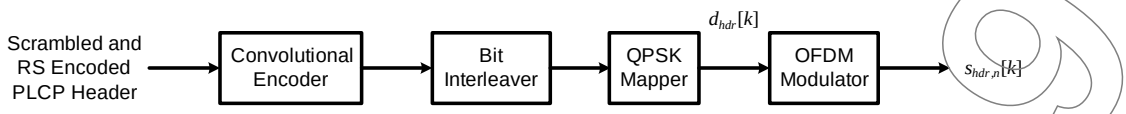


*Figure 12 - Encoding process for the scrambled, Reed-Solomon encoded PLCP header*

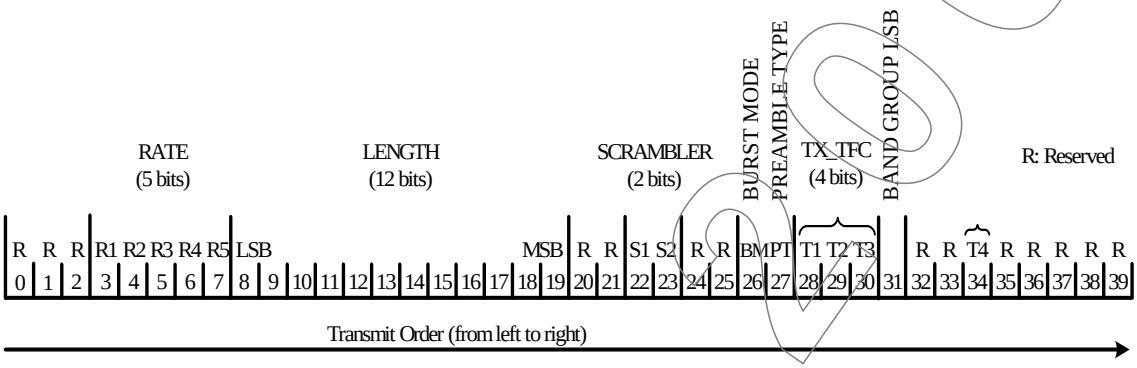


*Figure 13 - PHY Header bit assignment*

#### 10.3.1.1 Data rate field (RATE)

Depending on the data rate (RATE), bits R1–R5 shall be set according to the values in Table 24.

Table 24 - Rate-dependent parameters

| Rate (Mb/s) | R1 - R5 |
|---|---|
| 53,3 | 00000 |
| 80 | 00001 |
| 106,7 | 00010 |
| 160 | 00011 |
| 200 | 00100 |
| 320 | 00101 |
| 400 | 00110 |
| 480 | 00111 |
| Reserved | 01000 – 11111 |

#### 10.3.1.2 PLCP length field (LENGTH)

The PLCP length field shall be an unsigned 12-bit integer that indicates the number of octets in the frame payload (which does not include the FCS, the tail bits, or the pad bits).



Copyright International Organization for Standardization
Provided by IHS under license with ISO
No reproduction or networking permitted without license from IHS
Not for Resale

#### 10.3.1.3 PLCP scrambler field (SCRAMBLER)

The MAC shall set bits S1–S2 according to the scrambler seed identifier value. This two-bit value corresponds to the seed value chosen for the data scrambler.

#### 10.3.1.4 Burst mode (BM) field

The MAC shall set the burst mode (BM) bit, as defined in Table 25, to indicate whether the next packet is part of a packet "burst", i.e. burst mode transmission. Support for transmission and reception of burst mode is mandatory. In burst mode, the inter-frame spacing shall be equal to pMIFS (see 11.3).

Table 25 - Burst Mode field

| Burst Mode (BM) bit | Next Packet Status |
|---|---|
| ONE | Next packet is not part of burst |
| ZERO | Next packet is part of burst |

In burst mode, the minimum value of LENGTH shall be 1; while, in standard mode, the minimum value of LENGTH shall be 0.

#### 10.3.1.5 Preamble type (PT) field

The MAC shall set the preamble type (PT) bit in burst mode to indicate the type of PLCP preamble (standard or burst) used in the next packet according to Table 26. For data rates of 200 Mb/s and below, the PT bit shall be always set to ZERO (consistent with 10.2).

The preamble type bit only has meaning during a burst mode transmission. When devices are not in a burst mode transmission, the value of the preamble type bit shall be set to ZERO.

Table 26 - Preamble Type field

| Preamble Type (PT) bit | Type of Preamble Used for Next Packet |
|---|---|
| ZERO | Standard Preamble |
| ONE | Burst Preamble |

#### 10.3.1.6 TF code used at the transmitter (TX_TFC) field

The MAC shall configure the TX_TFC field to indicate the time-frequency code used at the transmitter for the current packet. Depending on the time-frequency code used, bits T1–T4 shall be set according to the values in Table 27.

Table 27 - Encoding of the TX_TFC field

| TF Code | T1 - T4 |
|---|---|
| 1 | 1000 |
| 2 | 0100 |
| 3 | 1100 |
| 4 | 0010 |

DRAFT 2009



Copyright International Organization for Standardization
Provided by IHS under license with ISO
No reproduction or networking permitted without license from IHS
Not for Resale

Table 27 - Encoding of the TX_TFC field (concluded)

| TF Code | T1 - T4 |
|---|---|
| 5 | 1010 |
| 6 | 0110 |
| 7 | 1110 |
| 8 | 0001 |
| 9 | 1001 |
| 10 | 0101 |
| Reserved | all other values |

#### 10.3.1.7 LSB of band group used at the transmitter (BG_LSB) field

The MAC shall configure the BG_LSB field to indicate the LSB of the Band Group used at the transmitter for the current packet. Depending on the Band Group used at the transmitter, bit BG_LSB shall be set according to the values in Table 28.

Table 28 - Encoding of the BG_LSB field

| Band Group | Band Group LSB (BG_LSB) |
|---|---|
| 1, 3, 5 | 1 |
| 2, 4, 6 | 0 |

### 10.3.2 Reed-Solomon outer code for the PLCP header

The PLCP header shall use a systematic (23, 17) Reed-Solomon outer code to improve upon the robustness of the $R = 1/3$, $K = 7$ inner convolutional code. The Reed-Solomon code is defined over $GF(2^8)$ with a primitive polynomial $p(z) = z^8 + z^4 + z^3 + z^2 + 1$, where $\alpha$ is the root of the polynomial $p(z)$. For brevity, this Galois field is denoted as *F*. As notation, the element $M = b_7z^7 + b_6z^6 + b_5z^5 + b_4z^4 + b_3z^3 + b_2z^2 + b_1z + b_0$, where $M \in F$, has the following binary representation $b_7b_6b_5b_4b_3b_2b_1b_0$, where $b_7$ is the MSB and $b_0$ is the LSB.

The generator polynomial is obtained by shortening a systematic (255, 249) Reed-Solomon code, which is specified by the generator polynomial

$$g(x) = \prod_{i=1}^{6} (x - \alpha^i) = x^6 + 126x^5 + 4x^4 + 158x^3 + 58x^2 + 49x + 117, \quad (7)$$

where $g(x)$ is the generator polynomial over *F*, $x \in F$ and the coefficients are given in decimal notation.

The mapping of the information octets $\boldsymbol{m} = (m_{248}, m_{247}, \ldots, m_0)$ to codeword octets $\boldsymbol{c} = (m_{248}, m_{247}, \ldots, m_0, r_5, r_4, \ldots, r_0)$ is achieved by computing the remainder polynomial $r(x)$



Copyright International Organization for Standardization
Provided by IHS under license with ISO
No reproduction or networking permitted without license from IHS
Not for Resale

$$r(x) = \sum_{i=0}^{5} r_i x^i = x^6 m(x) \bmod g(x), \quad (8)$$

where $m(x)$ is the information polynomial

$$m(x) = \sum_{i=0}^{248} m_i x^i, \quad (9)$$

and $r_i$, $i = 0, \ldots, 5$, and $m_i$, $i = 0, \ldots, 248$, are elements of *F*.

The shortening operation pre-appends 232 zero elements to the incoming 17 octet message as follows

$$m_i = 0, i = 17, \ldots, 248, \quad (10)$$

where the 17 octet message is formed by concatenating the 5 octets from the PHY header to the 12 octets from the scrambled MAC header and HCS. The message order is as follows: $m_{16}$ is the first octet of the PHY header, $m_{15}$ is the second octet of the PHY, $m_{12}$ is the last octet of the PHY, $m_{11}$ is the first octet of the scrambled MAC header and HCS, $m_{11}$ is the first octet of the scrambled MAC header and HCS and $m_0$ is the last octet of the scrambled MAC header and HCS. The bit mapping within the PLCP header is LSB first, such that the first bit of the PLCP header (or PHY header) is mapped to the LSB of $m_{16}$, the $9^{th}$ bit of the PLCP header is mapped to the LSB of $m_{15}$, and so on. The order of parity octets is as follows: $r_5$ is the first octet, $r_4$ is the second octet, and $r_0$ is the last octet of the Reed-Solomon parity section. Again, the mapping within the Reed-Solomon parity section of the PLCP header is LSB first, such that the first bit of the Reed-Solomon parity is mapped to the LSB of $r_5$, the $9^{th}$ bit of the Reed-Solomon parity is mapped to the LSB of $r_4$, and so on. A shift-register implementation of this operation is defined in Figure 14, with additions and multiplications over *F*. After $m_0$ has been inserted into the shift register, the switch shall be moved from the message polynomial input connection to the shift register output connection (right-to-left).

DRAFT 2009



Copyright International Organization for Standardization
Provided by IHS under license with ISO
No reproduction or networking permitted without license from IHS
Not for Resale

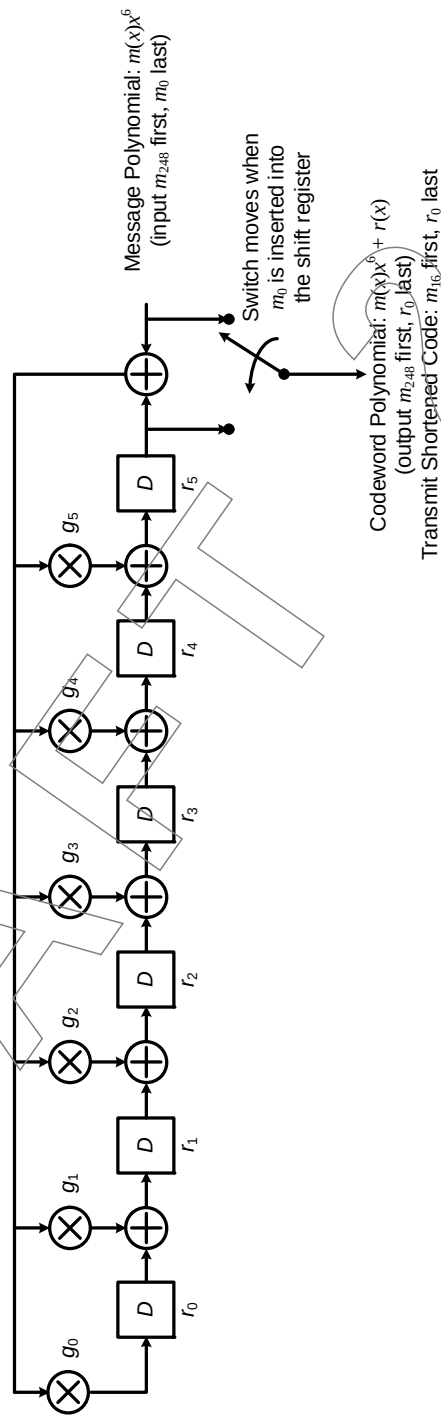


*Figure 14 - Shift-register implementation of systematic Reed-Solomon encoder*

DRAFT 2009



Copyright International Organization for Standardization
Provided by IHS under license with ISO
No reproduction or networking permitted without license from IHS
Not for Resale

### 10.3.3 Header check sequence

The combination of PHY header and the MAC header shall be protected with a 2 octet CCITT CRC-16 header check sequence (HCS). The CCITT CRC-16 HCS shall be the ones complement of the remainder generated by the modulo-2 division of the combined PHY and MAC headers by the polynomial: $x^{16} + x^{12} + x^5 + 1$. The HCS bits shall be processed in the transmit order. All HCS calculations shall be made prior to data scrambling. A schematic of the processing order is defined in Figure 15. The registers shall be initialized to all ONEs.

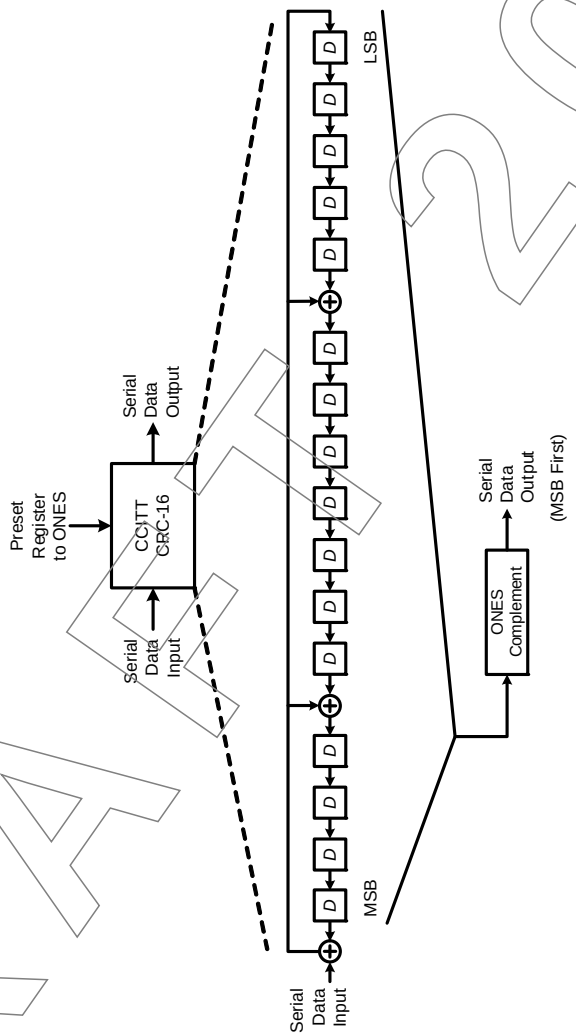


*Figure 15 - CCITT CRC-16 block diagram*

## 10.4 PSDU

The PSDU is the last major component of the PPDU and shall be constructed as defined in Figure 16:

1. Form the non-scrambled PSDU by appending the frame payload with the 4-octet FCS, six tail bits, and a sufficient number of pad bits (see 10.4.1) in order to ensure that the PSDU is aligned on the interleaver boundary.



Copyright International Organization for Standardization
Provided by IHS under license with ISO
No reproduction or networking permitted without license from IHS
Not for Resale

2. The resulting combination is scrambled according to 10.5.
3. The six tail bits in the PSDU shall be produced by replacing the six scrambled "ZERO" bits with six non-scrambled "ZERO" bits (see 10.6).

The resulting scrambled PSDU is encoded, as defined in Figure 17, using a $R$ = 1/3, $K$ = 7 convolutional code and punctured to achieve the appropriate coding rate (see 10.7), interleaved using a bit interleaver (see 10.8), mapped onto either a QPSK or DCM constellation (see 10.9), and finally, the resulting complex values are loaded onto the data subcarriers of the OFDM symbol (see 10.10) in order to create the real or complex baseband signal, depending on the desired data rate. Tone-nulling (see 9.2), if implemented, is then applied.

When the PLCP length field (i.e., the length of the frame payload) is zero, the length of the PSDU shall also be zero.

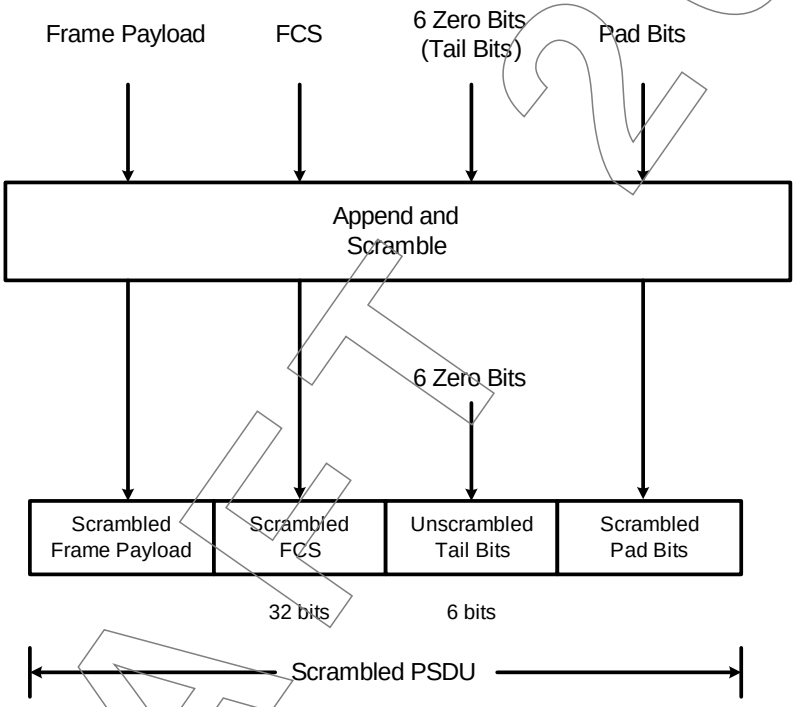


*Figure 16 - Block diagram of PSDU construction*

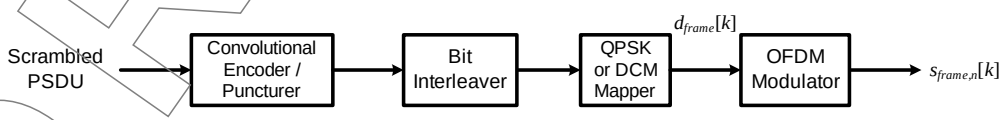


*Figure 17 - Block diagram of the encoding process for the scrambled PSDU*

### 10.4.1 Pad bits

Pad bits shall be appended after the 6 tail bits prior to scrambling and encoding in order to ensure that the resulting PSDU is aligned with the boundaries of the bit interleaver defined



Copyright International Organization for Standardization
Provided by IHS under license with ISO
No reproduction or networking permitted without license from IHS
Not for Resale

in 10.8. The number of pad bits, $N_{pad}$, that shall be inserted is a function of the number of information bits per 6 OFDM symbols $N_{IBP6S}$ and the number of octets in the frame payload:

$$N_{pad} = N_{IBP6S} \times \left\lceil \frac{8 \times \text{LENGTH} + 38}{N_{IBP6S}} \right\rceil - (8 \times \text{LENGTH} + 38), \quad (11)$$

where LENGTH specifies the number of octets in the frame payload and is defined according to 10.3.1.2, and where the value 38 represents the length in bits of the FCS and tail bits section when the length of the PLCP length field is non-zero (LENGTH > 0). The appended pad bits shall be set to ZEROs and scrambled with the rest of the PSDU.

## 10.5 Data scrambler

A side-stream scrambler shall be used to whiten only portions of the PLCP header, i.e., the MAC header and HCS, and the entire PSDU. In addition, the scrambler shall be initialized to a seed value specified by the MAC at the beginning of the MAC header and then re-initialized to the same seed value at the beginning of the PSDU.

The polynomial generator, $g(D)$, for the pseudo-random binary sequence (PRBS) generator shall be: $g(D) = 1 + D^{14} + D^{15}$, where $D$ is a single bit delay element. Using this generator polynomial, the corresponding PRBS, $x[n]$, is generated as

$$x[n] = x[n - 14] \oplus x[n - 15], n = 0, 1, 2, \ldots \quad (12)$$

where "⊕" denotes modulo-2 addition. The following sequence defines the initialization vector, $x_{init}$, which is specified by the parameter "seed value" in Table 29:

$$x_{init} = \left[ x_i[-1] x_i[-2] \ldots x_i[-14] \; x_i[-15] \right] , \quad (13)$$

where $x_i[-k]$ represents the binary initial value at the output of the $k^{th}$ delay element. The scrambled data bits, $v_m$, are obtained as defined in Figure 18:

$$v[m] = s[m] \oplus x[m], m = 0, 1, 2, \ldots \quad (14)$$

where $s[m]$ represents the non-scrambled data bits. The side-stream de-scrambler at the receiver shall be initialized with the same initialization vector, $x_{init}$, used in the transmitter scrambler. The initialization vector is determined from the seed identifier contained in the PLCP header of the received frame.

The 15-bit initialization vector or seed value shall correspond to the seed identifier as defined in Table 29. The MAC shall set the seed identifier value to 00 when the PHY is initialized and this value shall be incremented in a 2-bit rollover counter for *each* frame sent by the PHY.

Table 29 - Scrambler Seed Selection

| Seed Identifier (S1, S2) | Seed Value $x_{init} = x_i[-1]\, x_i[-2] \ldots x_i[-15]$ | PRBS Output First 16 bits $x[0]\, x[1] \ldots x[15]$ |
|---|---|---|
| 00 | 0011 1111 1111 111 | 0000 0000 0000 1000 |
| 01 | 0111 1111 1111 111 | 0000 0000 0000 0100 |
| 10 | 1011 1111 1111 111 | 0000 0000 0000 1110 |



Copyright International Organization for Standardization
Provided by IHS under license with ISO
No reproduction or networking permitted without license from IHS
Not for Resale

Table 29 - Scrambler Seed Selection (concluded)

| Seed Identifier (S1, S2) | Seed Value $x_{init} = x_i[-1]\ x_i[-2] \ldots\ x_i[-15]$ | PRBS Output First 16 bits $x[0]\ x[1]\ \ldots\ x[15]$ |
|---|---|---|
| 11 | 1111 1111 1111 111 | 0000 0000 0000 0010 |

All consecutive packets, including retransmissions, shall be sent with a different initial seed value.

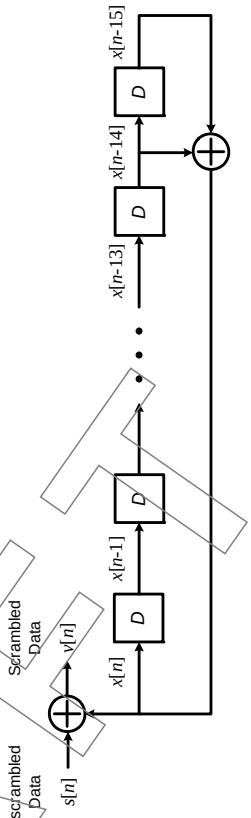


*Figure 18 - Block diagram of the side-stream scrambler*

## 10.6 Tail bits

The tail bit fields are required to return the convolutional encoder to the “zero state”. This procedure improves the error probability of the convolutional decoder, which relies on the future bits when decoding the message stream. The tail bit fields after the PHY header and the HCS shall consist of six non-scrambled ZEROs, and the tail bit field after the Reed-Solomon parity bit field shall be a punctured tail bit sequence consisting of four non-scrambled ZEROs.

The tail bit field following the scrambled frame check sequence shall be produced by replacing the six scrambled ZERO bits with six non-scrambled ZERO bits.

## 10.7 Convolutional encoder

The convolutional encoder shall use the rate $R$ = 1/3 code with generator polynomials, $g_0$ = $133_8$, $g_1$ = $165_8$, and $g_2$ = $171_8$, as defined in Figure 19. The bit denoted as “A” shall be the



Copyright International Organization for Standardization
Provided by IHS under license with ISO
No reproduction or networking permitted without license from IHS
Not for Resale

first bit generated by the encoder, followed by the bit denoted as “B”, and finally, by the bit denoted as “C”. Additional coding rates are derived from the “mother” rate $R$ = 1/3 convolutional code by employing “puncturing”. Puncturing is a procedure for omitting some of the encoded bits at the transmitter (thus reducing the number of transmitted bits and increasing the coding rate) and inserting a dummy “zero” metric into the decoder at the receiver in place of the omitted bits. The puncturing patterns are defined in Figure 20 through Figure 22. In each of these cases, the tables shall be filled in with encoder output bits from left to right. For the last block of bits, the process shall be stopped at the point at which encoder output bits are exhausted, and the puncturing pattern applied to the partially filled block.

The PLCP header shall be encoded using a coding rate of $R$ = 1/3. The encoder shall start from the all-zero state. After the encoding process for the PLCP header has been completed, the encoder shall be reset to the all-zero state before the encoding starts for the PSDU; in other words, the encoding of the PSDU shall also start from the all-zero state. The PSDU shall be encoded using the appropriate coding rate of $R$ = 1/3, 1/2, 5/8, or 3/4.

Decoding by the Viterbi algorithm is recommended.

DRAFT 2nd



Copyright International Organization for Standardization
Provided by IHS under license with ISO
No reproduction or networking permitted without license from IHS
Not for Resale

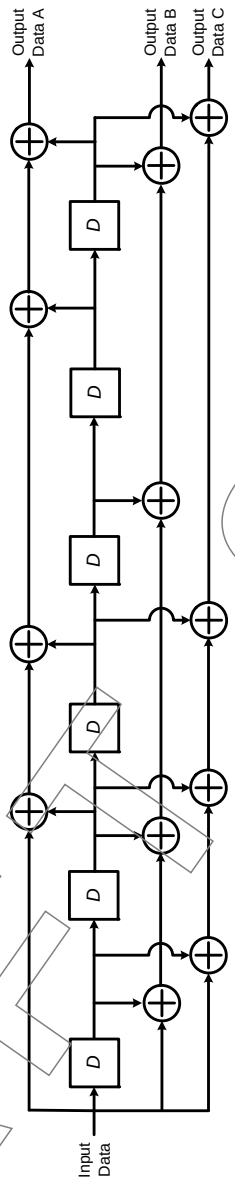


*Figure 19 - Convolutional encoder: rate R = 1/3, constraint length K = 7*

DRAFT 2009



Copyright International Organization for Standardization
Provided by IHS under license with ISO
No reproduction or networking permitted without license from IHS
Not for Resale

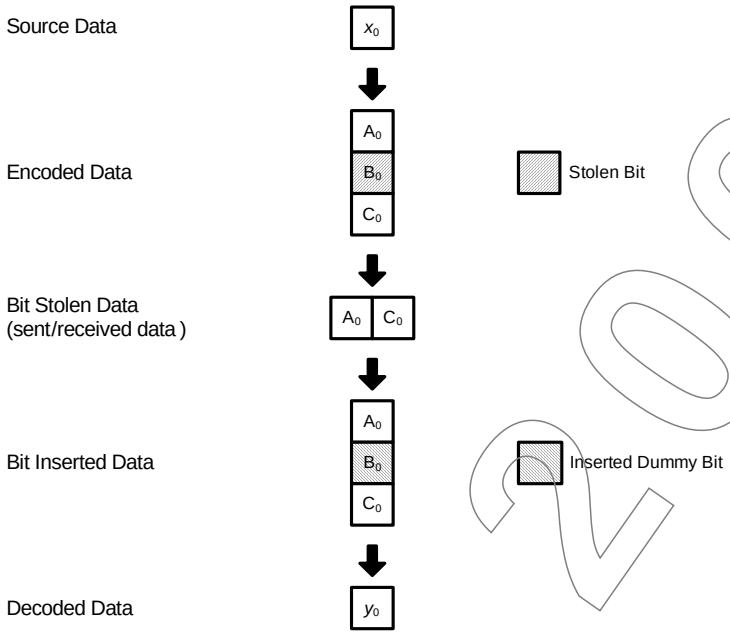


*Figure 20 - An example of bit-stealing and bit-insertion for R = 1/2 code*

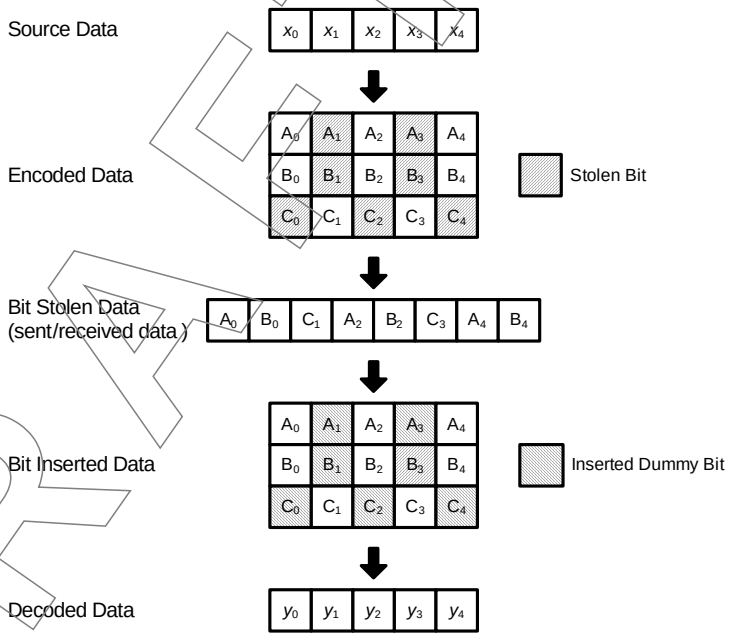


*Figure 21 - An example of bit-stealing and bit-insertion for R = 5/8 code*

DRAFT 2009



Copyright International Organization for Standardization
Provided by IHS under license with ISO
No reproduction or networking permitted without license from IHS
Not for Resale

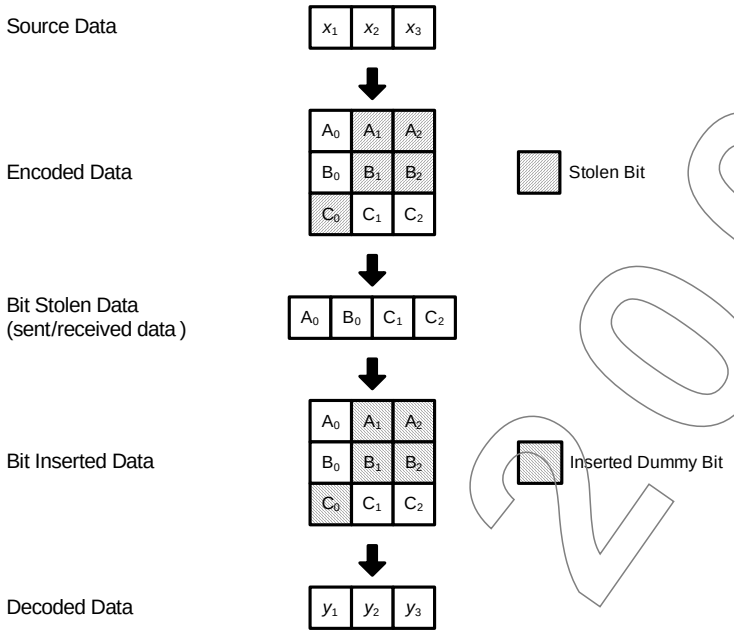


*Figure 22 - An example of bit-stealing and bit-insertion for R = 3/4 code*

## 10.8 Bit interleaving

The coded and padded bit stream shall be interleaved prior to modulation to provide robustness against burst errors. The bit interleaving operation is performed in three distinct stages, as defined in Figure 23:

1. Symbol interleaving, which permutes the bits across 6 consecutive OFDM symbols, enables the PHY to exploit frequency diversity within a band group.
2. Intra-symbol tone interleaving, which permutes the bits across the data subcarriers within an OFDM symbol, exploits frequency diversity across subcarriers and provides robustness against narrow-band interferers.
3. Intra-symbol cyclic shifts, which cyclically shift the bits in successive OFDM symbols by deterministic amounts, enables modes that employ time-domain spreading and the fixed frequency interleaving (FFI) modes to better exploit frequency diversity.

The additional parameters needed by the interleaver are listed in Table 30 as a function of the data rate.

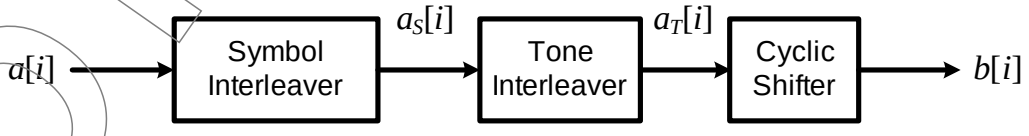


*Figure 23 - A block diagram of the various stages of the bit interleaver*

DRAFT 2009



Copyright International Organization for Standardization
Provided by IHS under license with ISO
No reproduction or networking permitted without license from IHS
Not for Resale

Table 30 - Parameters for the Interleaver

| Data Rate (Mb/s) | TDS Factor ($N_{TDS}$) | Coded Bits / OFDM Symbol ($N_{CBPS}$) | Tone Interleaver Block Size ($N_{Tint}$) | Cyclic Interleaver Shift ($N_{cyc}$) |
|---|---|---|---|---|
| 53,3 | 2 | 100 | 10 | 33 |
| 80 | 2 | 100 | 10 | 33 |
| 106,7 | 2 | 200 | 20 | 66 |
| 160 | 2 | 200 | 20 | 66 |
| 200 | 2 | 200 | 20 | 66 |
| 320 | 1 | 200 | 20 | 33 |
| 400 | 1 | 200 | 20 | 33 |
| 480 | 1 | 200 | 20 | 33 |

The symbol interleaving operation is performed by first grouping the coded bits into blocks of $N_{CBP6S}$ bits (corresponding to six "on-air" OFDM symbols) and then using a block interleaver of size $N_{CBPS}$ by $6/N_{TDS}$ to permute the coded bits. Let the sequences $a[i]$ and $a_S[i]$, where $i$ = 0, …, $N_{CBP6S}$ − 1, represent the input and output bits of the symbol block interleaver, respectively. The output of the symbol block interleaver is given by the following relationship:

$$a_S[i] = a\left[\left\lfloor \frac{i}{N_{CBPS}} \right\rfloor + \left(\frac{6}{N_{TDS}}\right) \times \mathrm{mod}(i, N_{CBPS})\right] \quad , \tag{15}$$

where $\lfloor \cdot \rfloor$ is the floor function, which returns the largest integer value less than or equal to its argument value, and mod($a$,$b$) is the modulus operator, which returns the non-negative integer remainder when $a$ is divided by $b$.

The output of the symbol interleaver, which is grouped together into blocks of $N_{CBPS}$ bits, is then permuted using a regular block intra-symbol interleaver of size $N_{Tint} \times 10$. Let the sequences $a_S[j]$ and $a_T[j]$, where $j$ = 0, …, $N_{CBPS}$ − 1, represent the input and output bits of the tone interleaver, respectively. The output of the tone interleaver is given by the following relationship:

$$a_T[j] = a_S\left[\left\lfloor \frac{j}{N_{Tint}} \right\rfloor + 10 \times \mathrm{mod}(j, N_{Tint})\right] \quad . \tag{16}$$

The output of the tone interleaver is then passed through an intra-symbol cyclic shifter, which consists of a different cyclic shift for each block of $N_{CBPS}$ bits within the span of the symbol interleaver. Let the sequences $a_T[i]$ and $b[i]$, where $i$ = 0, …, $N_{CBP6S}$ − 1, represent the input and output bits of the cyclic shifter, respectively. The output of the cyclic shifter is given by the following relationship:

$$b[i] = a_T\left[m(i) \times N_{CBPS} + \mathrm{mod}(i + m(i) \times N_{cyc}, N_{CBPS})\right] \quad , \tag{17}$$

where $m(i) = \lfloor i/N_{CBPS} \rfloor$, where $i$ = 0, …, $N_{CBP6S}$ − 1.



Copyright International Organization for Standardization
Provided by IHS under license with ISO
No reproduction or networking permitted without license from IHS
Not for Resale

## 10.9 Constellation mapping

This Clause describes the techniques for mapping the coded and interleaved binary data sequence onto a complex constellation. For data rates 200 Mb/s and lower, the binary data shall be mapped onto a QPSK constellation. For data rates 320 Mb/s and higher, the binary data shall be mapped onto a multi-dimensional constellation using a dual-carrier modulation (DCM) technique.

### 10.9.1 QPSK

The coded and interleaved binary serial input data, $b[i]$ where $i = 0, 1, 2, \ldots$, shall be divided into groups of two bits and converted into a complex number representing one of the four QPSK constellation points. The conversion shall be performed according to the Gray-coded constellation mapping, defined in Figure 24, with the input bit, $b[2k]$ where $k = 0, 1, 2, \ldots$, being the earliest of the two in the stream. The output values, $d[k]$ where $k = 0, 1, 2, \ldots$, are formed by multiplying $(2\times b[2k]-1) + j(2\times b[2k+1]-1)$ value by a normalization factor of $K_{MOD}$, as described in the following equation:

$$d[k] = K_{MOD} \times \left[ (2\times b[2k]-1) + j(2\times b[2k+1]-1) \right], \text{ where } k = 0, 1, 2, \ldots, \quad (18)$$

The normalization factor $K_{MOD} = 1/\sqrt{2}$ for a QPSK constellation. An approximate value of the normalization factor may be used, as long as the device conforms to the modulation accuracy requirements. For QPSK, $b[2k]$ determines the $I$ value, and $b[2k+1]$ determines the $Q$ value, as defined in Table 31.

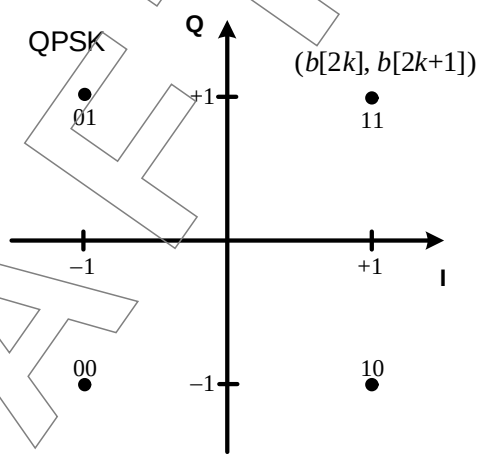


*Figure 24 - QPSK constellation bit encoding*

Table 31 - QPSK Encoding Table

| Input Bit ($b[2k]$, $b[2k+1]$) | *I*-out | *Q*-out |
|---|---|---|
| 00 | –1 | –1 |
| 01 | –1 | 1 |
| 10 | 1 | –1 |



Copyright International Organization for Standardization
Provided by IHS under license with ISO
No reproduction or networking permitted without license from IHS
Not for Resale

Table 31 - QPSK Encoding Table (concluded)

| Input Bit ($b[2k]$, $b[2k+1]$) | *I*-out | *Q*-out |
|---|---|---|
| 11 | 1 | 1 |

### 10.9.2 Dual-carrier modulation (DCM)

The coded and interleaved binary serial input data, $b[i]$ where $i$ = 0, 1, 2, ..., shall be divided into groups of 200 bits and converted into 100 complex numbers using a technique called dual-carrier modulation. The conversion shall be performed as follows:

1. The 200 coded bits are grouped into 50 groups of 4 bits. Each group is represented as ($b[g(k)]$, $b[g(k)+1]$, $b[g(k) + 50]$, $b[g(k) + 51]$), where $k \in [0, 49]$ and

$$g(k) = \begin{cases} 2k & k \in [0, 24] \\ 2k + 50 & k \in [25, 49] \end{cases} . \quad (19)$$

2. Each group of 4 bits ($b[g(k)]$, $b[g(k)+1]$, $b[g(k) + 50]$, $b[g(k) + 51]$) shall be mapped onto a four-dimensional constellation, as defined in Figure 25, and converted into two complex numbers ($d[k]$, $d[k + 50]$). The mapping between bits and constellation is enumerated in Table 32.
3. The complex numbers shall be normalized using a normalization factor $K_{MOD}$.

The normalization factor $K_{MOD} = 1/\sqrt{10}$ is used for the dual-carrier modulation. An approximate value of the normalization factor may be used, as long as the device conforms to the modulation accuracy requirements.

DRAFT ECMA-369



Copyright International Organization for Standardization
Provided by IHS under license with ISO
No reproduction or networking permitted without license from IHS
Not for Resale

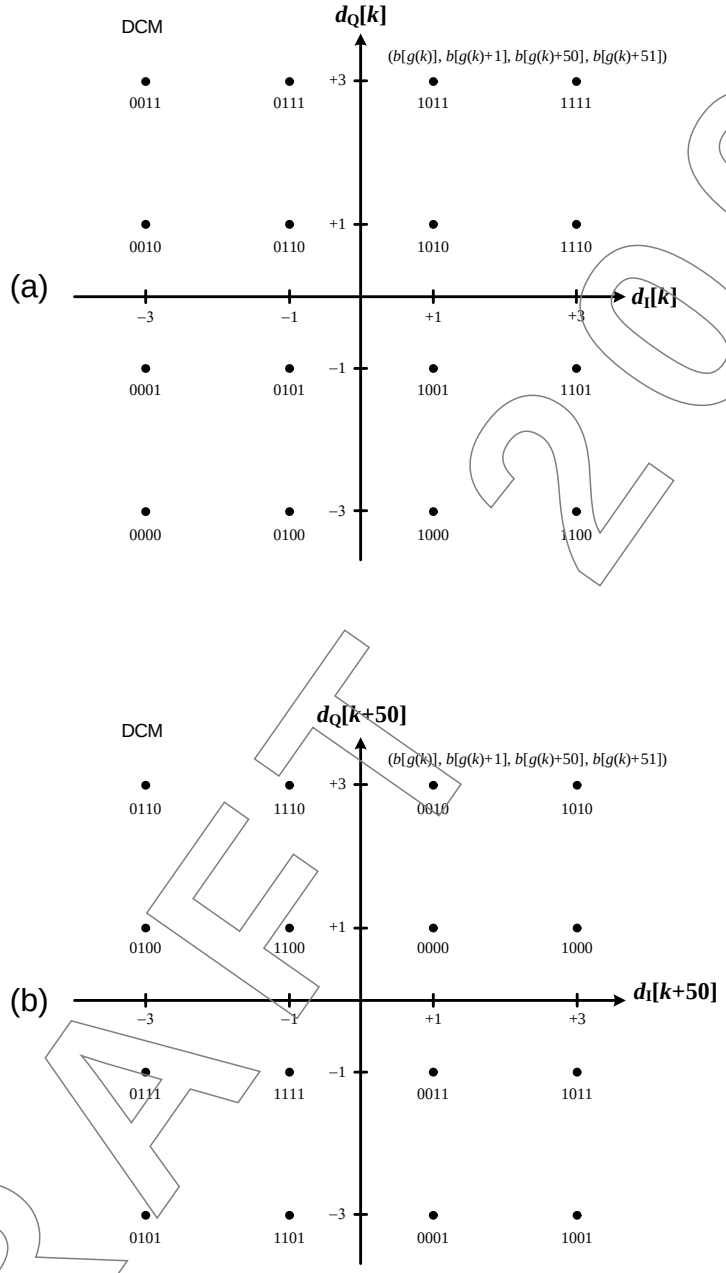


*Figure 25 - DCM encoding: (a) mapping for $d[k]$; (b) mapping for $d[k+50]$*

DRAFT 2009



Copyright International Organization for Standardization
Provided by IHS under license with ISO
No reproduction or networking permitted without license from IHS
Not for Resale

Table 32 - Dual-carrier Modulation Encoding Table

| Input Bit<br>($b[g(k)]$, $b[g(k)+1]$, $b[g(k)+50]$, $b[g(k)+51]$) | $d[k]$<br>*I*-out | $d[k]$<br>*Q*-out | $d[k+50]$<br>*I*-out | $d[k+50]$<br>*Q*-out |
|---|---|---|---|---|
| 0000 | –3 | –3 | 1 | 1 |
| 0001 | –3 | –1 | 1 | –3 |
| 0010 | –3 | 1 | 1 | 3 |
| 0011 | –3 | 3 | 1 | –1 |
| 0100 | –1 | –3 | –3 | 1 |
| 0101 | –1 | –1 | –3 | –3 |
| 0110 | –1 | 1 | –3 | 3 |
| 0111 | –1 | 3 | –3 | –1 |
| 1000 | 1 | –3 | 3 | 1 |
| 1001 | 1 | –1 | 3 | –3 |
| 1010 | 1 | 1 | 3 | 3 |
| 1011 | 1 | 3 | 3 | –1 |
| 1100 | 3 | –3 | –1 | 1 |
| 1101 | 3 | –1 | –1 | –3 |
| 1110 | 3 | 1 | –1 | 3 |
| 1111 | 3 | 3 | –1 | –1 |

## 10.10 OFDM modulation

The discrete-time signal, $s_n[k]$, shall be created by taking the IDFT of the stream of complex values as follows:

$$s_n[k] = \frac{1}{\sqrt{N_{FFT}}} \left[ \sum_{l=0}^{N_D} C_{D,n}[l] \exp(j2\pi M_D[l]k/N_{FFT}) + \sum_{l=0}^{N_G} C_{G,n}[l] \exp(j2\pi M_G[l]k/N_{FFT}) + \sum_{l=0}^{N_P} C_{P,n}[l] \exp(j2\pi M_P[l]k/N_{FFT}) \right], \quad (20)$$

where $k \in [0, N_{FFT}-1]$, $n \in [N_{sync}, N_{packet}-1]$, $N_D$ is the number of data subcarriers, $N_G$ is the number of guard subcarriers, $N_P$ is the number of pilot subcarriers, $N_{FFT}$ is the number of total subcarriers, and $C_{D,n}[l]$, $C_{G,n}[l]$, $C_{P,n}[l]$ are the complex numbers placed on the $l^{th}$ data, guard,



Copyright International Organization for Standardization
Provided by IHS under license with ISO
No reproduction or networking permitted without license from IHS
Not for Resale

and pilot subcarriers of the $n^{th}$ OFDM symbol, respectively. The relationship between $C_{D,n}[l]$ and $C_{G,n}[l]$, and the stream of complex values is defined in 10.10.2 and 10.10.3. The values for $C_{P,n}[l]$ are defined in 10.10.4. The functions $M_D[l]$, $M_G[l]$, and $M_P[l]$ define a mapping from the indices [0, $N_D$–1], [0, $N_G$–1], and [0, $N_P$–1] to the logical frequency subcarriers [$-N_T/2$, $N_T/2$] excluding 0, respectively. The exact definitions for the mapping functions $M_D[l]$, $M_G[l]$, and $M_P[l]$ are given below:

$$M_D[l] = \begin{cases} l-56 & l = 0 \\ l-55 & 1 \le l \le 9 \\ l-54 & 10 \le l \le 18 \\ l-53 & 19 \le l \le 27 \\ l-52 & 28 \le l \le 36 \\ l-51 & 37 \le l \le 45 \\ l-50 & 46 \le l \le 49 \\ l-49 & 50 \le l \le 53 \\ l-48 & 54 \le l \le 62 \\ l-47 & 63 \le l \le 71 \\ l-46 & 72 \le l \le 80 \\ l-45 & 81 \le l \le 89 \\ l-44 & 90 \le l \le 98 \\ l-43 & l = 99 \end{cases}, \tag{21}$$

$$M_G[l] = \begin{cases} -61 + l & l \in \left[0, \frac{N_G}{2} - 1\right] \\ 52 + l & l \in \left[\frac{N_G}{2}, N_G - 1\right] \end{cases}, \tag{22}$$

$$M_P[l] = -55 + 10l \qquad l \in [0, N_P - 1] \quad . \tag{23}$$

The mapping of the data, pilot and guard subcarriers within an OFDM symbol is defined in Figure 26.

Finally, the discrete-time signals for the PLCP header, $s_{hdr,n}[k]$, and the PSDU, $s_{frame,n}[k]$, shall be created as follows by appending a zero-padded suffix (ZPS) to every IDFT output:

$$s_{hdr,n}[k] = \begin{cases} s_n[k] & k \in [0, N_{FFT} - 1] \\ 0 & k \in [N_{FFT}, N_{SYM} - 1] \end{cases}, \tag{24}$$

for $n \in [N_{sync}, N_{sync} + N_{hdr} - 1]$, and

$$s_{frame,n}[k] = \begin{cases} s_n[k] & k \in [0, N_{FFT} - 1] \\ 0 & k \in [N_{FFT}, N_{SYM} - 1] \end{cases}, \tag{25}$$

for $n \in [N_{sync} + N_{hdr}, N_{packet} - 1]$. The zero-padded suffix is typically used to mitigate the effects of multi-path as well as to provide a time window or guard interval to allow the transmitter and receiver sufficient time to switch between the different centre frequencies.

DRAFT 100



Copyright International Organization for Standardization
Provided by IHS under license with ISO
No reproduction or networking permitted without license from IHS
Not for Resale

Within the OFDM modulation process, frequency-domain spreading within a symbol and time-domain spreading across two consecutive symbols is used to obtain further bandwidth expansion, beyond that provided by the forward error correction code and the time-frequency codes. Frequency-domain spreading entails transmitting the same information (complex number) on two separate subcarriers within the same OFDM symbol. Time-domain spreading involves transmitting the same information across two consecutive OFDM symbols. This technique is used to maximize frequency-diversity and to improve the performance in the presence of other non-coordinated devices.

DRAFT 2005



Copyright International Organization for Standardization
Provided by IHS under license with ISO
No reproduction or networking permitted without license from IHS
Not for Resale

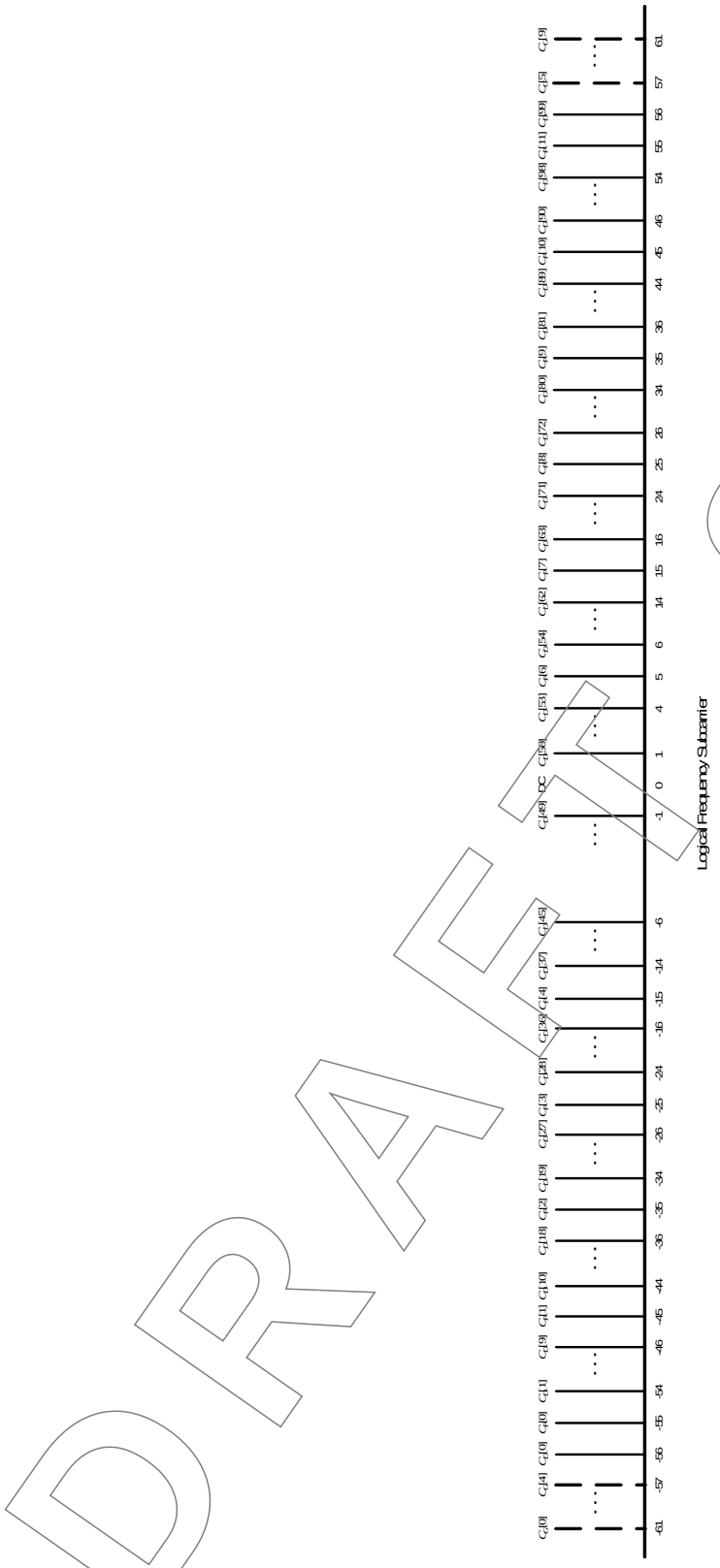


*Figure 26 - Mapping from data, guard and pilot subcarriers to logical frequency subcarriers*

DRAFT 2009



Copyright International Organization for Standardization
Provided by IHS under license with ISO
No reproduction or networking permitted without license from IHS
Not for Resale

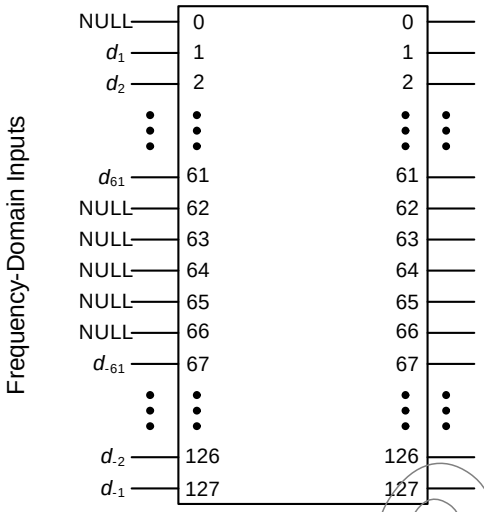


*Figure 27 - Input and outputs relationship of the IFFT*

### 10.10.1 Implementation considerations

A common way to implement an inverse discrete Fourier transform is by using an inverse Fast Fourier Transform (IFFT) algorithm. In this example, the logical frequency subcarriers $[-N_T/2, N_T/2]$ shall be mapped according to Figure 27. The logical frequency subcarriers 1 to 61 are mapped to the same numbered IFFT inputs, while the logical frequency subcarriers –61 to –1 are mapped into IFFT inputs 67 to 127, respectively. The rest of the inputs, 62 to 66 and the 0 (DC) input, are set to zero. The subcarrier falling at DC ($0^{th}$ subcarrier) is not used to avoid difficulties in DAC and ADC offsets and carrier feed-through in the RF chain. In Figure 27, $d_n$ indicates logical frequency subcarrier *n.*

### 10.10.2 Data subcarriers

The mapping between the stream of complex values and the data subcarriers is dependent on the portion of the PPDU and the data rate. In the following Clauses, a detailed mapping between the stream of complex values and the data subcarriers is provided.

#### 10.10.2.1 Mapping for PLCP header

Both frequency-domain and time-domain spreading techniques shall be used for the PLCP header. For this case, the stream of complex values, $d_{hdr}[k]$, where $k$ = 0, 1, 2, …, shall be the sequence $d[k]$ defined in 10.9.1 for the PLCP Header data. The stream $d_{hdr}[k]$ shall be grouped into sets of $N_D/2$ = 50 complex numbers. This group of complex values shall be mapped onto the $l^{th}$ data subcarrier of the $n^{th}$ OFDM symbol, $C_{D,n}[l]$, as follows:

$$C_{D,\,2n}[l] = d_{hdr}\left[\frac{N_D}{4}\times(2n - N_{sync}) + l\right], \tag{26}$$

$$C_{D,\,2n}\left[l + \frac{N_D}{2}\right] = d_{hdr}{}^{*}\left[\frac{N_D}{4}\times(2n - N_{sync}) + \left(\frac{N_D}{2} - 1 - l\right)\right], \tag{27}$$

$$C_{D,\,2n+1}[l] = p_{spread}[n] \times d_{hdr}\left[\frac{N_D}{4}\times(2n - N_{sync}) + l\right], \tag{28}$$



Copyright International Organization for Standardization
Provided by IHS under license with ISO
No reproduction or networking permitted without license from IHS
Not for Resale

$$C_{D,\,2n+1}\left[l+\frac{N_D}{2}\right] = p_{spread}[n] \times \quad d_{hdr}{}^{*}\left[\frac{N_D}{4}\times(2n-N_{sync})+\left(\frac{N_D}{2}-1-l\right)\right], \tag{29}$$

where

$$p_{spread}[n] = \quad p\left[\mathrm{mod}\left(n-\frac{N_{sync}}{2}+6, N_{FFT}-1\right)\right], \tag{30}$$

and where $p[n]$ is a length 127 pseudo-random sequence, whose values are defined in Table 33, $l \in \left[0, \frac{N_D}{2}-1\right]$, $n \in \left[\frac{N_{sync}}{2}, \frac{N_{sync}+N_{hdr}}{2}-1\right]$, $N_D$ is the number of data subcarriers, $N_{sync}$ is the number of symbols in the PLCP preamble and $N_{hdr}$ is the number of symbols in the PLCP header.

DRAFT 2009



Copyright International Organization for Standardization
Provided by IHS under license with ISO
No reproduction or networking permitted without license from IHS
Not for Resale

Table 33 - Length 127 pseudo-random sequence

| $n$ | $p[n]$ | $n$ | $p[n]$ | $n$ | $p[n]$ | $n$ | $p[n]$ |
|---|---|---|---|---|---|---|---|
| 0 | 1 | 32 | 1 | 64 | -1 | 96 | -1 |
| 1 | 1 | 33 | 1 | 65 | -1 | 97 | -1 |
| 2 | 1 | 34 | -1 | 66 | 1 | 98 | -1 |
| 3 | 1 | 35 | 1 | 67 | -1 | 99 | -1 |
| 4 | -1 | 36 | 1 | 68 | 1 | 100 | -1 |
| 5 | -1 | 37 | -1 | 69 | -1 | 101 | 1 |
| 6 | -1 | 38 | -1 | 70 | 1 | 102 | -1 |
| 7 | 1 | 39 | 1 | 71 | 1 | 103 | 1 |
| 8 | -1 | 40 | 1 | 72 | -1 | 104 | 1 |
| 9 | -1 | 41 | 1 | 73 | -1 | 105 | -1 |
| 10 | -1 | 42 | -1 | 74 | -1 | 106 | 1 |
| 11 | -1 | 43 | 1 | 75 | 1 | 107 | -1 |
| 12 | 1 | 44 | -1 | 76 | 1 | 108 | 1 |
| 13 | 1 | 45 | -1 | 77 | -1 | 109 | 1 |
| 14 | -1 | 46 | -1 | 78 | -1 | 110 | 1 |
| 15 | 1 | 47 | 1 | 79 | -1 | 111 | -1 |
| 16 | -1 | 48 | -1 | 80 | -1 | 112 | -1 |
| 17 | -1 | 49 | 1 | 81 | 1 | 113 | 1 |
| 18 | 1 | 50 | -1 | 82 | -1 | 114 | -1 |
| 19 | 1 | 51 | -1 | 83 | -1 | 115 | -1 |
| 20 | -1 | 52 | 1 | 84 | 1 | 116 | -1 |
| 21 | 1 | 53 | -1 | 85 | -1 | 117 | 1 |
| 22 | 1 | 54 | -1 | 86 | 1 | 118 | 1 |
| 23 | -1 | 55 | 1 | 87 | 1 | 119 | 1 |
| 24 | 1 | 56 | 1 | 88 | 1 | 120 | -1 |
| 25 | 1 | 57 | 1 | 89 | 1 | 121 | -1 |
| 26 | 1 | 58 | 1 | 90 | -1 | 122 | -1 |
| 27 | 1 | 59 | 1 | 91 | 1 | 123 | -1 |
| 28 | 1 | 60 | -1 | 92 | -1 | 124 | -1 |
| 29 | 1 | 61 | -1 | 93 | 1 | 125 | -1 |
| 30 | -1 | 62 | 1 | 94 | -1 | 126 | -1 |
| 31 | 1 | 63 | 1 | 95 | 1 | | |



Copyright International Organization for Standardization
Provided by IHS under license with ISO
No reproduction or networking permitted without license from IHS
Not for Resale

#### 10.10.2.2 Mapping for data rates of 53,3 Mb/s and 80 Mb/s

Both frequency-domain and time-domain spreading techniques shall be used when the PSDU is encoded at a data rate of 53,3 Mb/s or 80 Mb/s. For this case, the stream of complex values, $d_{frame}[k]$, where $k$ = 0, 1, 2, …, shall be the sequence defined in 10.9.1 for the PSDU. The stream $d_{frame}[k]$ shall be grouped into sets of $N_D / 2 = 50$ complex numbers. This group of complex values shall be mapped onto the $l^{th}$ data subcarrier of the $n^{th}$ OFDM symbol, $C_{D,n}[l]$, as follows:

$$C_{D,\,2n}[l] = d_{frame}\left[\frac{N_D}{4} \times (2n - N_{sync} - N_{hdr}) + l\right] \quad , \tag{31}$$

$$C_{D,\,2n}\left[l + \frac{N_D}{2}\right] = d_{frame}{}^{*}\left[\frac{N_D}{4} \times (2n - N_{sync} - N_{hdr}) + \left(\frac{N_D}{2} - 1 - l\right)\right] \quad , \tag{32}$$

$$C_{D,\,2n+1}[l] = p_{spread}[n] \times d_{frame}\left[\frac{N_D}{4} \times (2n - N_{sync} - N_{hdr}) + l\right] \quad , \tag{33}$$

$$C_{D,\,2n+1}\left[l + \frac{N_D}{2}\right] = p_{spread}[n] \times d_{frame}{}^{*}\left[\frac{N_D}{4} \times (2n - N_{sync} - N_{hdr}) + \left(\frac{N_D}{2} - 1 - l\right)\right] \quad , \tag{34}$$

where $p_{spread}[n]$ is defined in (30), $p[n]$ is defined in Table 33, $l \in \left[0, \frac{N_D}{2} - 1\right]$, $n \in \left[\frac{N_{sync} + N_{hdr}}{2}, \frac{N_{packet}}{2} - 1\right]$, $N_D$ is the number of data subcarriers, $N_{sync}$ is the number of symbols in the PLCP preamble, $N_{hdr}$ is the number of symbols in the PLCP header and $N_{packet}$ is the total number of symbols in the packet.

#### 10.10.2.3 Mapping for data rates of 106,7 Mb/s, 160 Mb/s, and 200 Mb/s

Only time-domain spreading techniques shall be used when the PSDU is encoded at a data rate of 106,7 Mb/s, 160 Mb/s, or 200 Mb/s. For this case, the stream of complex values, $d_{frame}[k]$, where $k$ = 0, 1, 2, …, shall be the sequence defined in 10.9.1 for the PSDU. The stream $d_{frame}[k]$ shall be grouped into sets of $N_D = 100$ complex numbers. This group of complex values shall be mapped onto the $l^{th}$ data subcarrier of the $n^{th}$ OFDM symbol, $C_{D,n}[l]$, as follows:

$$C_{D,\,2n}[l] = d_{frame}\left[\frac{N_D}{2} \times (2n - N_{sync} - N_{hdr}) + l\right] \quad , \tag{35}$$

$$C_{D,\,2n+1}[l] = p_{spread}[n] \times \left\{ \mathrm{imag}\left(d_{frame}\left[\frac{N_D}{2} \times (2n - N_{sync} - N_{hdr}) + (N_D - 1 - l)\right]\right) + j \;\; \mathrm{real}\left(d_{frame}\left[\frac{N_D}{2} \times (2n - N_{sync} - N_{hdr}) + (N_D - 1 - l)\right]\right) \right\} \quad , \tag{36}$$

where $p_{spread}[n]$ is defined in (30), $p[n]$ is defined in Table 33, $l \in [0, N_D - 1]$, $n \in \left[\frac{N_{sync} + N_{hdr}}{2}, \frac{N_{packet}}{2} - 1\right]$, $N_D$ is the number of data subcarriers, $N_{sync}$ is the number of



Copyright International Organization for Standardization
Provided by IHS under license with ISO
No reproduction or networking permitted without license from IHS
Not for Resale

symbols in the PLCP preamble, $N_{hdr}$ is the number of symbols in the PLCP header and $N_{packet}$ is the total number of symbols in the packet.

#### 10.10.2.4 Mapping for data rates of 320 Mb/s, 400 Mb/s, and 480 Mb/s

No spreading techniques shall be used when the PSDU is encoded at a data rate of 320 Mb/s, 400 Mb/s, or 480 Mb/s. For this case, the stream of complex values, $d_{frame}[k]$, where $k$ = 0, 1, 2, …, shall be the sequence defined in 10.9.2 for the PSDU. The stream $d_{frame}[k]$ shall be grouped into sets of $N_D$ = 100 complex numbers. This group of complex values shall be mapped onto the $l^{th}$ data subcarrier of the $n^{th}$ OFDM symbol, $C_{D,n}[l]$, as follows:

$$C_{D,n}[l] = d_{frame}[N_D \times (n - N_{sync} - N_{hdr}) + l] \quad , \tag{37}$$

where $l \in [0, N_D - 1]$, $n \in [N_{sync} + N_{hdr}, N_{packet} - 1]$ , $N_D$ is the number of data subcarriers, $N_{sync}$ is the number of symbols in the PLCP preamble, $N_{hdr}$ is the number of symbols in the PLCP header and $N_{packet}$ is the total number of symbols in the packet.

### 10.10.3 Guard subcarriers

For each OFDM symbol, starting with the channel estimation sequence within the PLCP preamble, there shall be ten subcarriers, 5 on each edge of the occupied frequency band, allocated as guard subcarriers. The relationship between the power levels of the guard subcarriers and that of the data subcarriers shall be implementation dependent. This relationship shall remain constant within a packet, i.e., from the start of the channel estimation sequence to the end of the packet. In addition, the power levels for the guard subcarriers shall be chosen in such a way as to ensure that the transmitted signal meets the local regulatory requirements of minimum occupied bandwidth and any other necessary regulatory conditions.

The 10 guard subcarriers are located on either edge of the OFDM symbol; at logical frequency subcarriers -61, -60, …, -57, and 57, 58, …, 61. The data on these carriers shall be created by copying over the five outermost data-bearing subcarriers from the nearest edge of the OFDM symbol as defined below:

$$C_{G,n}[l] = \begin{cases} C_{D,n}[l] & l \in \left[0, \frac{N_G}{2} - 1\right] \\ C_{D,n}[l + 90] & l \in \left[\frac{N_G}{2}, N_G - 1\right] \end{cases} \quad , \tag{38}$$

where $C_{G,n}[l]$ is the $l^{th}$ guard subcarrier of the $n^{th}$ OFDM symbol, $n \in [N_{sync}, N_{packet} - 1]$ , $N_{sync}$ is the number of symbols in the PLCP preamble and $N_{packet}$ is the total number of symbols in the packet.

Individual implementations may exploit the guard subcarriers for various purposes, including relaxing the specs on analog transmit and analog receive filters, and possibly improving performance.

### 10.10.4 Pilot subcarriers

In all of the OFDM symbols following the PLCP preamble, twelve of the subcarriers shall be dedicated to pilot signals in order to allow for coherent detection and to provide robustness against frequency offsets and phase noise. These pilot signals shall be placed in logical frequency subcarriers -55, -45, -35, -25, -15, -5, 5, 15, 25, 35, 45, and 55. The mapping between actual pilot sequence and the pilot subcarriers is dependent on the data

DRAFT



Copyright International Organization for Standardization
Provided by IHS under license with ISO
No reproduction or networking permitted without license from IHS
Not for Resale

portion of the PPDU and the data rate. In the following Clauses, a detailed mapping between the stream of complex values and the data subcarriers is provided.

#### 10.10.4.1 Mapping for PLCP header

During the PLCP header portion of the PPDU, the information for the $l^{th}$ pilot subcarrier of the $n^{th}$ OFDM symbol shall be defined as follows:

$$C_{P,\,2n}[l] = p\left[\mathrm{mod}\left(n - \frac{N_{sync}}{2}, N_{FFT} - 1\right)\right] \times d_{pilot,cs}[l], \quad (39)$$

$$C_{P,\,2n+1}[l] = p\left[\mathrm{mod}\left(n - \frac{N_{sync}}{2}, N_{FFT} - 1\right)\right] \times p_{spread}[n] \times d_{pilot,cs}[l], \quad (40)$$

where

$$d_{pilot,cs}[l] = \begin{cases} \frac{1-j}{\sqrt{2}} & l = 0, 3 \\ \frac{-1+j}{\sqrt{2}} & l = 1, 2, 4, 5 \\ \frac{1+j}{\sqrt{2}} & l = 8, 11 \\ \frac{-1-j}{\sqrt{2}} & l = 6, 7, 9, 10 \end{cases}, \quad (41)$$

and where $p[n]$ is defined in Table 33, $p_{spread}[n]$ is defined in (30), $n \in \left[\frac{N_{sync}}{2}, \frac{N_{sync}+N_{hdr}}{2} - 1\right]$, $N_{sync}$ is the number of symbols in the PLCP preamble and $N_{hdr}$ is the number of symbols in the PLCP header.

#### 10.10.4.2 Mapping for data rates of 53,3 Mb/s and 80 Mb/s

When the PPDU is encoded at a data rate of 53,3 Mb/s or 80 Mb/s, the information for the $l^{th}$ pilot subcarrier of the $n^{th}$ OFDM symbol shall be defined as follows:

$$C_{P,\,2n}[l] = p\left[\mathrm{mod}\left(n - \frac{N_{sync}}{2}, N_{FFT} - 1\right)\right] \times d_{pilot,cs}[l], \quad (42)$$

$$C_{P,\,2n+1}[l] = p\left[\mathrm{mod}\left(n - \frac{N_{sync}}{2}, N_{FFT} - 1\right)\right] \times p_{spread}[n] \times d_{pilot,cs}[l], \quad (43)$$

where $d_{pilot,cs}[l]$ is defined in (41), $p[n]$ is defined in Table 33, $p_{spread}[n]$ is defined in (30), $n \in \left[\frac{N_{sync}+N_{hdr}}{2}, \frac{N_{packet}}{2} - 1\right]$, $N_{sync}$ is the number of symbols in the PLCP preamble, $N_{hdr}$ is the number of symbols in the PLCP header and $N_{packet}$ is the total number of symbols in the packet.

#### 10.10.4.3 Mapping for data rates of 106,7 Mb/s, 160 Mb/s, and 200 Mb/s

When the PPDU is encoded at a data rate of 106,7 Mb/s, 160 Mb/s, or 200 Mb/s, the information for the $l^{th}$ pilot subcarrier of the $n^{th}$ OFDM symbol shall be defined as follows:



Copyright International Organization for Standardization
Provided by IHS under license with ISO
No reproduction or networking permitted without license from IHS
Not for Resale

$$C_{P,\,2n}[l] \;=\; p\left[\mathrm{mod}\left(n-\frac{N_{sync}}{2}, N_{FFT}-1\right)\right] \times d_{pilot,ncs}[l], \tag{44}$$

$$C_{P,\,2n+1}[l] \;=\; p\left[\mathrm{mod}\left(n-\frac{N_{sync}}{2}, N_{FFT}-1\right)\right] \times p_{spread}[n] \times d_{pilot,ncs}[l], \tag{45}$$

where

$$d_{pilot,ncs}[l] = \begin{cases} \dfrac{1+j}{\sqrt{2}} & l = 0, 3, 8, 11 \\ \dfrac{-1-j}{\sqrt{2}} & l = 1, 2, 4, 5, 6, 7, 9, 10 \end{cases}, \tag{46}$$

and where $p[n]$ is defined in Table 33, $p_{spread}[n]$ is defined in (30), $n \in \left[\frac{N_{sync}+N_{hdr}}{2}, \frac{N_{packet}}{2}-1\right]$, $N_{sync}$ is the number of symbols in the PLCP preamble, $N_{hdr}$ is the number of symbols in the PLCP header and $N_{packet}$ is the total number of symbols in the packet.

#### 10.10.4.4 Mapping for data rates of 320 Mb/s, 400 Mb/s, and 480 Mb/s

When the PPDU is encoded at a data rate of 320 Mb/s, 400 Mb/s, or 480 Mb/s, the information for the $l^{th}$ pilot subcarrier of the $n^{th}$ OFDM symbol shall be defined as follows:

$$C_{P,\,n}[l] \;=\; p\left[\mathrm{mod}\left(n-N_{sync}-\frac{N_{hdr}}{2}, N_{FFT}-1\right)\right] \times d_{pilot,ncs}[l], \tag{47}$$

where $d_{pilot,ncs}[l]$ is defined in (46), $p[n]$ is defined in Table 33, $n \in [N_{sync}+N_{hdr}, N_{packet}-1]$, $N_{sync}$ is the number of symbols in the PLCP preamble, $N_{hdr}$ is the number of symbols in the PLCP header and $N_{packet}$ is the total number of symbols in the packet.

# 11 General requirements

## 11.1 Operating band frequencies

### 11.1.1 Operating frequency range

This PHY operates in the 3 100 – 10 600 MHz frequency band.

### 11.1.2 Band numbering

The relationship between centre frequency, $f_c$, and BAND_ID number, $n_b$, is given by the following equation:

$$f_c(n_b) = \quad 2904 + 528 \times n_b \;\; (\mathrm{MHz}) \qquad n_b = 1, \ldots, 14 \;\; . \tag{48}$$

This definition provides a unique numbering system for all channels that have a spacing of 528 MHz and lie within the band 3 100 – 10 600 MHz. As defined in Figure 28, six band groups are defined. Band groups 1 to 4 consist of 3 bands each, spanning the bands 1 to 12.



Copyright International Organization for Standardization
Provided by IHS under license with ISO
No reproduction or networking permitted without license from IHS
Not for Resale

Band group 5 contains the two bands 13 and 14. Band group 6 contains the bands 9, 10 and 11. The band allocation is summarized in Table 34.

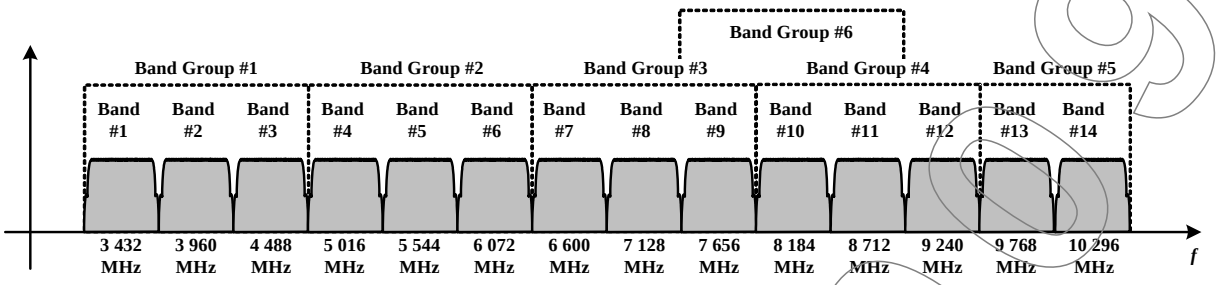


*Figure 28 - Diagram of the band group allocation*

Table 34 - Band Group Allocation

| Band Group | BAND_ID ($n_b$) | Lower Frequency (MHz) | Center Frequency (MHz) | Upper Frequency (MHz) |
|---|---|---|---|---|
| 1 | 1 | 3 168 | 3 432 | 3 696 |
| | 2 | 3 696 | 3 960 | 4 224 |
| | 3 | 4 224 | 4 488 | 4 752 |
| 2 | 4 | 4 752 | 5 016 | 5 280 |
| | 5 | 5 280 | 5 544 | 5 808 |
| | 6 | 5 808 | 6 072 | 6 336 |
| 3 | 7 | 6 336 | 6 600 | 6 864 |
| | 8 | 6 864 | 7 128 | 7 392 |
| | 9 | 7 392 | 7 656 | 7 920 |
| 4 | 10 | 7 920 | 8 184 | 8 448 |
| | 11 | 8 448 | 8 712 | 8 976 |
| | 12 | 8 976 | 9 240 | 9 504 |
| 5 | 13 | 9 504 | 9 768 | 10 032 |
| | 14 | 10 032 | 10 296 | 10 560 |
| 6 | 9 | 7 392 | 7 656 | 7 920 |
| | 10 | 7 920 | 8 184 | 8 448 |
| | 11 | 8 448 | 8 712 | 8 976 |

## 11.2 Channelization

Unique logical channels are defined by using up to ten different time-frequency codes for each band group. The TFCs and the associated base sequences (and corresponding preambles) for band group 1 are defined in Table 35 as a function of BAND_ID values. Similarly, the definitions for the TFCs and the associated base sequences (and corresponding preambles) for band groups 2, 3, 4, 5, and 6 are enumerated in Table 36 through Table 40.



Copyright International Organization for Standardization
Provided by IHS under license with ISO
No reproduction or networking permitted without license from IHS
Not for Resale

Table 35 - Time-Frequency Codes and Preamble Patterns For Band Group 1

| TFC Number | Base Sequence / Preamble | BAND_ID ($n_b$) for TFC | | | | | |
|---|---|---|---|---|---|---|---|
| 1 | 1 | 1 | 2 | 3 | 1 | 2 | 3 |
| 2 | 2 | 1 | 3 | 2 | 1 | 3 | 2 |
| 3 | 3 | 1 | 1 | 2 | 2 | 3 | 3 |
| 4 | 4 | 1 | 1 | 3 | 3 | 2 | 2 |
| 5 | 5 | 1 | 1 | 1 | 1 | 1 | 1 |
| 6 | 6 | 2 | 2 | 2 | 2 | 2 | 2 |
| 7 | 7 | 3 | 3 | 3 | 3 | 3 | 3 |
| 8 | 8 | 1 | 2 | 1 | 2 | 1 | 2 |
| 9 | 9 | 1 | 3 | 1 | 3 | 1 | 3 |
| 10 | 10 | 2 | 3 | 2 | 3 | 2 | 3 |

Table 36 - Time-Frequency Codes and Preamble Patterns For Band Group 2

| TFC Number | Base Sequence / Preamble | BAND_ID ($n_b$) for TFC | | | | | |
|---|---|---|---|---|---|---|---|
| 1 | 1 | 4 | 5 | 6 | 4 | 5 | 6 |
| 2 | 2 | 4 | 6 | 5 | 4 | 6 | 5 |
| 3 | 3 | 4 | 4 | 5 | 5 | 6 | 6 |
| 4 | 4 | 4 | 4 | 6 | 6 | 5 | 5 |
| 5 | 5 | 4 | 4 | 4 | 4 | 4 | 4 |
| 6 | 6 | 5 | 5 | 5 | 5 | 5 | 5 |
| 7 | 7 | 6 | 6 | 6 | 6 | 6 | 6 |
| 8 | 8 | 4 | 5 | 4 | 5 | 4 | 5 |
| 9 | 9 | 4 | 6 | 4 | 6 | 4 | 6 |
| 10 | 10 | 5 | 6 | 5 | 6 | 5 | 6 |

Table 37 - Time-Frequency Codes and Preamble Patterns For Band Group 3

| TFC Number | Base Sequence / Preamble | BAND_ID ($n_b$) for TFC | | | | | |
|---|---|---|---|---|---|---|---|
| 1 | 1 | 7 | 8 | 9 | 7 | 8 | 9 |
| 2 | 2 | 7 | 9 | 8 | 7 | 9 | 8 |
| 3 | 3 | 7 | 7 | 8 | 8 | 9 | 9 |
| 4 | 4 | 7 | 7 | 9 | 9 | 8 | 8 |
| 5 | 5 | 7 | 7 | 7 | 7 | 7 | 7 |



Copyright International Organization for Standardization
Provided by IHS under license with ISO
No reproduction or networking permitted without license from IHS
Not for Resale

Table 37 - Time-Frequency Codes and Preamble Patterns For Band Group 3 (concluded)

| TFC Number | Base Sequence / Preamble | BAND_ID ($n_b$) for TFC | | | | | |
|---|---|---|---|---|---|---|---|
| 6 | 6 | 8 | 8 | 8 | 8 | 8 | 8 |
| 7 | 7 | 9 | 9 | 9 | 9 | 9 | 9 |
| 8 | 8 | 7 | 8 | 7 | 8 | 7 | 8 |
| 9 | 9 | 7 | 9 | 7 | 9 | 7 | 9 |
| 10 | 10 | 8 | 9 | 8 | 9 | 8 | 9 |

Table 38 - Time-Frequency Codes and Preamble Patterns For Band Group 4

| TFC Number | Base Sequence / Preamble | BAND_ID ($n_b$) for TFC | | | | | |
|---|---|---|---|---|---|---|---|
| 1 | 1 | 10 | 11 | 12 | 10 | 11 | 12 |
| 2 | 2 | 10 | 12 | 11 | 10 | 12 | 11 |
| 3 | 3 | 10 | 10 | 11 | 11 | 12 | 12 |
| 4 | 4 | 10 | 10 | 12 | 12 | 11 | 11 |
| 5 | 5 | 10 | 10 | 10 | 10 | 10 | 10 |
| 6 | 6 | 11 | 11 | 11 | 11 | 11 | 11 |
| 7 | 7 | 12 | 12 | 12 | 12 | 12 | 12 |
| 8 | 8 | 10 | 11 | 10 | 11 | 10 | 11 |
| 9 | 9 | 10 | 12 | 10 | 12 | 10 | 12 |
| 10 | 10 | 11 | 12 | 11 | 12 | 11 | 12 |

Table 39 - Time-Frequency Codes and Preamble Patterns For Band Group 5

| TFC Number | Base Sequence / Preamble | BAND_ID ($n_b$) for TFC | | | | | |
|---|---|---|---|---|---|---|---|
| 5 | 5 | 13 | 13 | 13 | 13 | 13 | 13 |
| 6 | 6 | 14 | 14 | 14 | 14 | 14 | 14 |
| 8 | 8 | 13 | 14 | 13 | 14 | 13 | 14 |

Table 40 - Time-Frequency codes and preamble patterns for Band Group 6

| MAC TFC Number | MAC Band Group | PHY TFC number | PHY Band Group | Base Sequence / Preamble | BAND_ID ($n_b$) for TFC | | | | | |
|---|---|---|---|---|---|---|---|---|---|---|
| 1 | 6 | 1 | 6 | 3 | 9 | 10 | 11 | 9 | 10 | 11 |
| 2 | 6 | 2 | 6 | 4 | 9 | 11 | 10 | 9 | 11 | 10 |
| 3 | 6 | 3 | 6 | 1 | 9 | 9 | 10 | 10 | 11 | 11 |

DRAFT



Copyright International Organization for Standardization
Provided by IHS under license with ISO
No reproduction or networking permitted without license from IHS
Not for Resale

Table 40 - Time-Frequency codes and preamble patterns for Band Group 6 (concluded)

| MAC TFC Number | MAC Band Group | PHY TFC number | PHY Band Group | Base Sequence / Preamble | BAND_ID ($n_b$) for TFC | | | | | |
|---|---|---|---|---|---|---|---|---|---|---|
| 4 | 6 | 4 | 6 | 2 | 9 | 9 | 11 | 11 | 10 | 10 |
| 5 | 6 | 7 | 3 | 7 | 9 | 9 | 9 | 9 | 9 | 9 |
| 6 | 6 | 5 | 4 | 5 | 10 | 10 | 10 | 10 | 10 | 10 |
| 7 | 6 | 6 | 4 | 6 | 11 | 11 | 11 | 11 | 11 | 11 |
| 8 | 6 | 9 | 6 | 9 | 9 | 10 | 9 | 10 | 9 | 10 |
| 9 | 6 | 10 | 6 | 10 | 9 | 11 | 9 | 11 | 9 | 11 |
| 10 | 6 | 8 | 4 | 8 | 10 | 11 | 10 | 11 | 10 | 11 |

Band group 6 requires special consideration due to overlap with band groups 3 and 4. Referring to Table 40, the MAC TFC number and MAC BG are the ones used by the MAC when selecting the current channel. If the MAC-PHY interface is implemented then the MAC TFC number and MAC BG are used in the TXCHAN and RXCHAN registers (see ECMA-369 for definitions of these registers). The MAC TFC number also indicates the hopping pattern and cover sequence to be used. The PHY TFC number and the PHY BG are the values encoded in the PHY Header, TXVECTOR and RXVECTOR. The mapping in Table 40 ensures that fully overlapping channels appear identical over the air.

The PHY layer channelization scheme is based on the definition of band groups, as defined in Table 34, and the definition of TFCs, as defined in Table 35 through Table 40, and is summarized in Table 41. The PHY channels are identified by channel numbers as defined in this table. The channel number takes on values from 0–255 (decimal). The values not defined in Table 41 are reserved for future use. Channels using TFCs 1–4 are also referred to as time-frequency interleaved (TFI) channels, and those using TFCs 5–7 are also referred to as fixed-frequency interleaved (FFI) channels. Channels using TFCs 8-10 are referred to as two-band time-frequency interleaved (TFI2) channels.

Table 41 - Mapping of Channel Number to Band Group and Time-Frequency Code

| Channel Number (decimal) | Channel Number (octal) | (Band Group, TF Code) |
|---|---|---|
| 9 - 15 | 011 - 017 | (1, 1 - 7) |
| 17 - 23 | 021 - 027 | (2, 1 - 7) |
| 25 - 31 | 031 - 037 | (3, 1 - 7) |
| 33 - 39 | 041 - 047 | (4, 1 - 7) |
| 45 - 46 | 055 - 056 | (5, 5 - 6) |
| 49 - 55 | 061 - 067 | (6, 1 - 7) |
| 72 - 74 | 110 - 112 | (1, 8 - 10) |
| 80 - 82 | 120 - 122 | (2, 8-10) |



Copyright International Organization for Standardization
Provided by IHS under license with ISO
No reproduction or networking permitted without license from IHS
Not for Resale

Table 41 - Mapping of Channel Number to Band Group and Time-Frequency Code (concluded)

| Channel Number (decimal) | Channel Number (octal) | (Band Group, TF Code) |
|---|---|---|
| 88 - 90 | 130 - 132 | (3, 8-10) |
| 96 - 98 | 140 - 142 | (4, 8-10) |
| 104 | 150 | (5, 8) |
| 112 - 114 | 160 - 162 | (6, 8-10) |

A band group is supported if all channels in the band group are supported.

For band group 6, the Band Group and TFC in Table 41 indicate the MAC Band Group and MAC TFC.

The current channel number for transmit or receive indicates an intended band group, which in turn indicates the use of bits in the Tone-Nulling mask.

## 11.3 PHY layer timing

The values for the PHY layer timing parameters are defined in Table 42.

Table 42 - PHY layer timing parameters

| PHY Parameter | Value |
|---|---|
| pMIFS | $6 \times T_{SYM}$ = 1,875 μs |
| pSIFS | $32 \times T_{SYM}$ = 10,0 μs |
| pCCADetectTime | $18 \times T_{SYM}$ = 5,625 μs |
| pBandSwitchTime | 9,47 ns |

### 11.3.1 Interframe spacing

The interframe spacing parameters are given in Table 43.

Table 43 - Interframe spacing parameters

| MAC Parameter | Value |
|---|---|
| MIFS | pMIFS |
| SIFS | pSIFS |

### 11.3.2 Receive-to-transmit turnaround time

The RX-to-TX turnaround time shall not be greater than pSIFS. This turnaround time shall be measured at the air interface. The time elapsed from the leading edge of the last received symbol, where a symbol is composed of the OFDM symbol (IFFT output) and a zero-padded suffix, to the leading edge of the first transmitted symbol of the PLCP preamble for the next frame shall not be greater than pSIFS + $T_{SYM}$.



Copyright International Organization for Standardization
Provided by IHS under license with ISO
No reproduction or networking permitted without license from IHS
Not for Resale

### 11.3.3 Transmit-to-receive turnaround time

The TX-to-RX turnaround time shall not be greater than pSIFS. This turnaround time shall be measured at the air interface. The time elapsed from the leading edge of the last transmitted symbol until the receiver is ready to begin the reception of the next PHY frame shall not be greater than pSIFS + $T_{SYM}$.

### 11.3.4 Time between successive transmissions

For uninterrupted successive transmissions by a device in standard mode, the interframe spacing after the packet shall be pSIFS if PLCP length field is zero, and shall not be less than pMIFS if the PLCP length field is non-zero. The interframe spacing time shall be measured at the air interface. When the PLCP length field is zero, the time elapsed from the leading edge of the last transmitted symbol to the leading edge of the first transmitted symbol of the PLCP preamble for the following packet shall be equal to pSIFS + $T_{SYM}$. When the PLCP length field is non-zero, the time elapsed from the leading edge of the last transmitted symbol to the leading edge of the first transmitted symbol of the PLCP preamble for the following packet shall not be less than pMIFS + $T_{SYM}$.

For burst mode transmissions, the interframe spacing between uninterrupted successive transmissions by a device shall be fixed to pMIFS ±1 ns. The interframe spacing time shall be measured at the air interface. The time elapsed from the leading edge of the last transmitted symbol to the leading edge of the first transmitted symbol of the PLCP preamble for the following packet shall be fixed to pMIFS + $T_{SYM}$ ±1 ns.

See 10.3.1.4 for details on LENGTH constraints for burst mode.

### 11.3.5 Band frequency switch time

The band frequency switch time is defined as the interval from when the PHY receives the last valid sample of a symbol on one band frequency until it is ready to receive the next symbol on a new band frequency. For best performance, the switching time between band frequencies should not exceed pBandSwitchTime.

# 12 Transmitter specifications

## 12.1 Transmit PSD mask

The transmitted spectral mask shall have the following break points: an emissions level of 0 dBr (dB relative to the maximum spectral density of the signal) from –260 MHz to 260 MHz around the centre frequency, –12 dBr at 285 MHz frequency offset, and –20 dBr at 330 MHz frequency offset and above. For all other intermediate frequencies, the emissions level is assumed to be linear in the dB scale. The transmitted spectral density of the transmitted signal shall fall within the spectral mask, as defined in Figure 29.

DRAFT COPY



Copyright International Organization for Standardization
Provided by IHS under license with ISO
No reproduction or networking permitted without license from IHS
Not for Resale

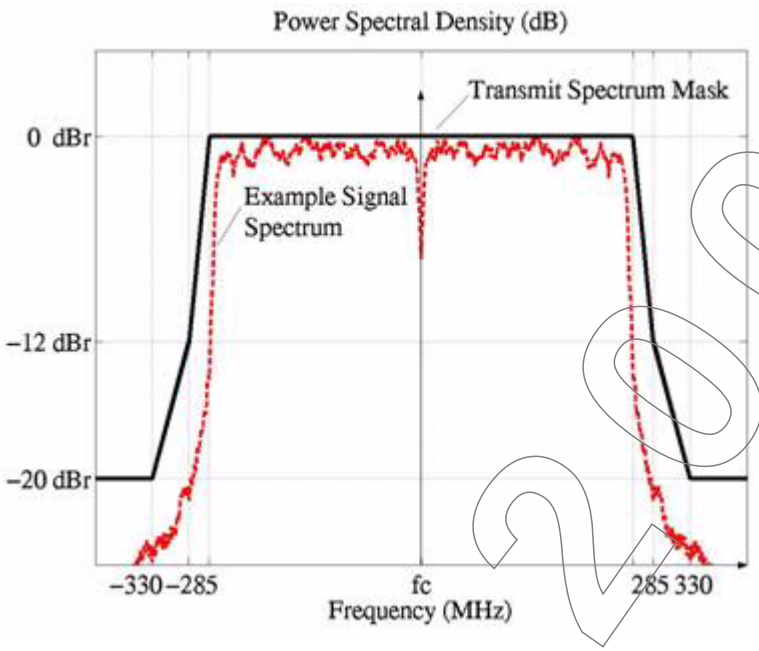


*Figure 29 - Transmit power spectral density mask*

## 12.2 Transmit centre frequency tolerance

The transmitted centre frequency tolerance shall be ±20 ppm maximum.

## 12.3 Symbol clock frequency tolerance

The symbol clock frequency tolerance shall be ±20 ppm maximum.

## 12.4 Clock synchronization

The transmit centre frequencies and the symbol clock frequency shall be derived from the same reference oscillator.

## 12.5 Phase coherence

The transmit carrier frequencies shall be phase coherent within a single band over the duration of a single packet. Lack of phase coherence may contribute to Transmitter Constellation Error as described in 12.7.

Phase coherence in TFI mode or TFI2 mode means that the phase of the LO is coherent when it returns to the same frequency. For example, let $\omega_k$ = radian frequency and $\theta_k$=phase, k={1,2,3}. The LO can be represented as $\sin(\omega_k t + \theta_k)$. Let the hopping pattern be 1,2,3,1,2,3,... Frequency hops occur when t = NT, T=symbol duration. Thus at the hopping points, the LO is $\sin(\omega_1 T + \theta_1)$, $\sin(\omega_2 2T + \theta_2)$, $\sin(\omega_3 3T + \theta_3)$, $\sin(\omega_1 4T + \theta_1)$, $\sin(\omega_2 5T + \theta_2)$, $\sin(\omega_3 6T + \theta_3)$,... which is phase coherent by definition since the LO returns to the same phase $\theta_1$ for N=1,4,...; $\theta_2$ for N=2,5,...; $\theta_3$ for N=3,6,...

## 12.6 Transmit power control

A device shall provide support for transmit power control (TPC). The objective of a power control algorithm is to minimize the transmit power spectral density, while still providing a reliable link for the transfer of information.



Copyright International Organization for Standardization
Provided by IHS under license with ISO
No reproduction or networking permitted without license from IHS
Not for Resale

When the device is using time-frequency interleaving, the monotonic dynamic range for the attenuation of the transmit power shall be 0 – 12 dB, with a step size granularity of 2 dB. When the device is using time-frequency interleaving over 2 bands, the monotonic dynamic range for the attenuation of the transmit power shall be 0 – 10 dB, with a step size granularity of 2 dB. When the device is using fixed-frequency interleaving, the monotonic dynamic range for the attenuation of the transmit power shall be 0 – 8 dB, with a step size granularity of 2 dB. Table 44 summaries the mapping between the TXPWR_LEVEL and the associated transmit power attenuation.

Table 44 - Mapping between TXPWR_LEVEL and transmit power attenuation

| TXPWR_LEVEL | TX Power Attenuation for TFI Modes | TX Power Attenuation for TFI2 Modes | TX Power Attenuation for FFI Modes |
|---|---|---|---|
| 0 | 0 dB | 0 dB | 0 dB |
| 1 | 2 dB | 2 dB | 2 dB |
| 2 | 4 dB | 4 dB | 4 dB |
| 3 | 6 dB | 6 dB | 6 dB |
| 4 | 8 dB | 8 dB | 8 dB |
| 5 | 10 dB | 10 dB | RESERVED |
| 6 | 12 dB | RESERVED | RESERVED |
| 7 | RESERVED | RESERVED | RESERVED |

In either case, the relative accuracy of change in transmit power attentuation shall be the maximum of ±1 dB or ±20% of the change in the attenuation (in the dB scale). As an example, for an attenuation change of 4 dB and an attenuation change of 8 dB, the allowed relative accuracy is ±1,0 dB and ±1,6 dB, respectively.

Finally, the device shall support a value for the signal-to-carrier leakage at transmitter output port of at least 20 dB.

## 12.7 Transmitter constellation error

The relative constellation RMS error, averaged over all data and pilot subcarriers of the OFDM symbols and over all of the frames, shall not exceed the values given in Table 45. Note that the relative constellation error values are a function of the transmit power attenuation. The relative constellation error values are based on a multi-path margin of 2,5 dB for data rates of 200 Mb/s and lower and 3,6 dB for data rates 320 Mb/s and higher, and an implementation loss of 2,5 dB. In addition, it is assumed that the degradation due to the relative constellation error can be no more than 0,5 dB for data rates of 200 Mb/s and lower, and 1,0 dB for data rates of 320 Mb/s and higher.

DRAFT ISO



Copyright International Organization for Standardization
Provided by IHS under license with ISO
No reproduction or networking permitted without license from IHS
Not for Resale

Table 45 - Permissible Relative Constellation Error

| | Relative Constellation RMS Error | | |
|---|---|---|---|
| Data Rate | No TX Attenuation | TX Attenuation of 2, 4, 6 dB (All TFCs) | TX Attenuation of 8, 10, 12 dB (All TFCs) |
| 53,3 Mb/s, 80 Mb/s, 106,7 Mb/s, 160 Mb/s, 200 Mb/s | –17,0 dB | -15,5 dB | -14,5 dB |
| 320 Mb/s, 400 Mb/s, 480 Mb/s | –19,5 dB | -18,0 dB | -17,0 dB |

The relative constellation RMS error calculation shall be performed using a device capable of converting the transmitted signal into a stream of complex samples at 528 Msample/s or more, with sufficient accuracy in the I/Q imbalance, DC offset, phase noise, etc. The sampled signal shall then be processed in a manner similar to that of an ideal receiver including adding the first 32 samples of the zero-padded suffix to the received OFDM symbol via the overlap-and-add method. An example of the minimum steps necessary for receiver processing is listed below:

1. Detect the start of the packet and frame boundary.
2. Estimate the correct sampling time and frequency offset. Correct as needed.
3. Estimate the channel frequency response.
4. For each symbol estimate the common phase error (CPE) from the pilot sub-carriers, then filter the sequence of CPE estimates using a single-pole low-pass filter with a 3 dB cut-off frequency as defined in Table 46. De-rotate each OFDM symbol with the filtered phase estimate.

Table 46 - CPE measurement 3 dB cut-off frequency

| 3 dB cutoff frequency (radians/filter update rate) | TFC number |
|---|---|
| $\pi/4$ | 1, 2, 3, 4 |
| $\pi/12$ | 5, 6, 7 |
| $\pi/6$ | 8, 9, 10 |

$2\pi$ corresponds to the filter update rate of $F_{SYM}$ for FFI Modes, $F_{SYM}/3$ for TFI Modes and $F_{SYM}/2$ for TFI2 Modes. The value for $F_{SYM}$ is defined in Table 2.

5. Equalize the channel with the estimated channel frequency response.
6. For each of the data and pilot subcarriers, find the closest constellation point and compute the Euclidean distance.
7. Compute the RMS error, averaged over all the data and pilot subcarriers and over all frames, as follows:



Copyright International Organization for Standardization
Provided by IHS under license with ISO
No reproduction or networking permitted without license from IHS
Not for Resale

$$RMS_{error} = \frac{1}{N_f}\sum_{i=1}^{N_f}\sqrt{\sum_{n=1+N_{sync}+N_{hdr}}^{N_{packet}}\left[\frac{\sum_{k=1}^{N_D}\left|R_{D,n}[k]-C_{D,n}[k]\right|^2+\sum_{k=1}^{N_P}\left|R_{P,n}[k]-C_{P,n}[k]\right|^2}{(N_D+N_P)N_{frame}P_0}\right]}, \quad (48)$$

where $N_f$ is the number of packets under test, $N_{packet}$ is the number of symbols in the packet, $N_{sync}$ is the number of symbols in the PLCP preamble, $N_{hdr}$ is the number of symbols in the PLCP header, $N_{frame} = N_{packet} - N_{sync} - N_{hdr}$ is the number of symbols in the PSDU, $N_D$ is the number of data subcarriers, $N_P$ is the number of pilot subcarriers, $P_0$ is the average power over all payload symbols of the data and pilot constellations, $C_{D,n}[k]$ and $C_{P,n}[k]$ are the transmitted $k^{th}$ data subcarrier and $k^{th}$ pilot subcarrier for the $n^{th}$ OFDM symbol, respectively, and $R_{D,n}[k]$ and $R_{P,n}[k]$ are the observed $k^{th}$ data subcarrier and $k^{th}$ pilot subcarrier for the $n^{th}$ OFDM symbol, respectively. The values for $N_D$ and $N_P$ are defined in Table 2, while the values for $N_{sync}$, $N_{hdr}$, $N_{frame}$, and $N_{packet}$ are defined in Table 3. The RMS error shall be computed over the payload portion of the packet only. $P_0$ is re-computed for each packet.

The test shall be performed over a minimum of $N_f = 100$ packets, where the PSDU of each packet is at least 30 symbols in length and is generated from random data.

The RMS error shall be measured without any tone-nulling applied.

# 13 Receiver specification

## 13.1 Receiver sensitivity

For a packet error rate (PER) of less than 8% with a PSDU of 1 024 octets, the minimum receiver sensitivity numbers in AWGN for the different data rates are listed in Table 47 for Band Group 1, where a noise figure of 6,6 dB (referenced at the antenna), an implementation loss of 2,5 dB, and a margin of 3 dB have been assumed. For band groups 2 - 6 an additional 1 - 2 dB noise figure degradation can be expected. In addition, the sensitivity numbers are subject to variations in noise figure over process, voltage and temperature.

Table 47 - Minimum Receiver Sensitivities for Band Group 1

| Data Rate (Mb/s) | Minimum Receiver Sensitivity (dBm) |
|---|---|
| 53,3 | –80,8 |
| 80 | –78,9 |
| 106,7 | –77,8 |
| 160 | –75,9 |
| 200 | –74,5 |
| 320 | –72,8 |
| 400 | –71,5 |
| 480 | –70,4 |



Copyright International Organization for Standardization
Provided by IHS under license with ISO
No reproduction or networking permitted without license from IHS
Not for Resale

## 13.2 Receiver CCA performance

The start of a valid OFDM transmission at a receiver level equal to or greater than the minimum sensitivity for a 53,3 Mb/s transmission (–80,8 dBm) shall cause CCA to indicate that the channel is busy with a probability > 90% within pCCADetectTime.

## 13.3 Link quality indicator

A device shall be capable of estimating the link quality of the received channel, where the link quality shall be defined as an estimate of the SNR available after the FFT and will include all implementation losses associated with that particular receiver architecture (quantization noise, channel estimation errors, etc.). Devices capable only of data rates up to 200Mbps shall be capable of estimating values in the range from -2 dB to +7 dB. Devices capable of data rates above 200Mbps shall be capable of estimating values in the range from –2 dB to +12 dB. Estimating values below –2 dB or above +12 dB is optional. All estimated values, when measured under static channel conditions, shall be monotonically increasing with signal strength over the entire reporting range. Note that the estimates may exhibit saturation behaviour at values higher than +12 dB. Finally, the link quality estimates shall be made on a packet-by-packet basis.

When reporting the estimates of the link quality, the device shall quantize these values to the nearest dB in the range from –6 dB to +24 dB and report them as the link quality estimate (LQE). The accuracy of the LQE is defined as the standard deviation of the packet-by-packet estimates for a static AWGN channel and a fixed SNR value. Table 48 enumerates the allowed standard deviation of the estimates as a function of the reporting range. Even though the reported estimates should be nominally equal to the SNR after the FFT, no bounds on absolute accuracy with respect to an external reference plane are intended or implied by this specification.

Table 48 - Allowed Standard Deviation for the LQE with a payload of 1 024 Bytes

| Link Quality Estimate (LQE) | Standard Deviation for Estimate ($\sigma$) |
|---|---|
| -6 dB, …, -4 dB | 1,3 dB |
| -3 dB, …, 0 dB | 1,1 dB |
| 1 dB, …, 6 dB | 0,9 dB |
| 7 dB, …, 24 dB | 0,7 dB |

The mapping between LQE and the Link Quality Indicator (LQI) is summarized in Table 49. A Standard encoding is used to report the estimates in the range from –6 dB (0000 0001) to +24 dB (0001 1111). The all-ZERO bit representation implies that reporting of LQE is not supported by the device, or that LQE is too small to be measured accurately. Additionally, the range from 1000 0000 to 1011 1111 and the range from 1100 0000 to 1111 1111 are defined to allow vendors to report additional link quality information. All other bit representations are reserved for future use.

The test for the accuracy of the link quality estimate shall be performed over a minimum of $N_f$ = 1 000 packets, where the PSDU of each packet is at least 1 024 bytes in length and is generated from random data.

Table 49 - Encoding for the Link Quality Estimates

| LQI | Description |
|---|---|
| 0000 0000 | Link Quality is too low to be measured |



Copyright International Organization for Standardization
Provided by IHS under license with ISO
No reproduction or networking permitted without license from IHS
Not for Resale

Table 49 - Encoding for the Link Quality Estimates (concluded)

| LQI | Description |
|---|---|
| 0000 0001 – 0001 1111 | LQI = (LQE + 7dB) |
| 0010 0000 – 0111 1111 | RESERVED |
| 1000 0000 – 1011 1111 | Vendor specific Link Quality encoding |
| 1100 0000 – 1111 1111 | Vendor specific Link Quality encoding |

### 13.4 Receive Signal Strength Indicator

A device may indicate the strength in decibels of the incoming signal. The RSSI is a monotonically increasing function of the energy received at the antenna. It is a value between 0 and RSSIMaximum. RSSIMaximum is implementation defined, up to 255.

## 14 Ranging and location awareness

A device may support the capability to determine the round trip delay between itself and another device, hereafter referred to as ranging. This round trip delay may be used to calculate the distance between the devices. The distance can be estimated by multiplying the speed of light by the measured propagation delay between the devices.

### 14.1 Ranging requirements

If ranging is supported, all devices shall support ranging capabilities with an accuracy and precision of ±60 cm or better.

### 14.2 Ranging reference signal

The propagation delay between two devices should be measured with respect to a reference point. The ranging reference point is the beginning of the first channel estimation symbol in the PLCP preamble, i.e., the first sample of the first channel estimation sequence $s_{sync,N_{pf}}[0]$ (see 10.2.1, Figure 7, Figure 8 and (4)).

### 14.3 PHY ranging resources

If ranging is supported, the PHY shall contain a MIB attribute pRangingTimer to capture the time of generation or detection of the ranging reference signal. This attribute captures the value of a 15-bit to 32-bit ranging counter which is running at the clock frequency specified in Table 59. See Table 59 for a list of valid ranging timer configurations.

If ranging is supported, implementations shall support at least a pRangingTimer containing the value of a 15-bit counter in the Active Timer Bits [17:3] clocked at 528 MHz. Bits [31:18] and [2:0] shall be ZERO.

Implementations may provide more timer bits and higher clock frequencies to increase precision as described in 2.4.

To support MAC algorithms that use multiple ranging transactions to correct for frequency offset between two stations, longer counters may be provided in PHY hardware. If supported in the PHY, more of the bits [31:18] will be active. All inactive bits shall be ZERO.

### 14.4 PHY ranging operation

If ranging is supported, the PHY shall set the pRangingTimer to the ranging counter value when either of the following occurs:

- PHY is in transmit mode, and the PHY reaches the ranging reference point.



Copyright International Organization for Standardization
Provided by IHS under license with ISO
No reproduction or networking permitted without license from IHS
Not for Resale

- PHY is in receive mode, and the PHY recognizes the ranging reference point

## 14.5 Ranging calibration constants

If ranging is supported, the following constants shall be made available. These values allow the MAC to correct the pRangingTimer values for delays in the PHY and associated circuits.

1 RANGING_TRANSMIT_DELAY = the time from the PHY sampling the ranging counter corresponding to its processing the ranging reference point to the time that ranging reference point is emitted from the local antenna.

2 RANGING_RECEIVE_DELAY = the time from the arrival of the ranging reference point at the local antenna to the time that ranging reference point is first recognised in the PHY, corresponding to its sampling the ranging counter.

These constants are 16-bit unsigned integer values, in units of 4 224 MHz clock periods. These values allow the MAC to correct the pRangingTimer values for delays in the PHY and associated circuits.

## 14.6 Example range measurement (informative)

Figure 30 shows a pair of ranging frames being exchanged between two devices. $R_{M1}$ is designated as the initial ranging measurement frame transmitted by device #1, whereas $R_{M2}$ is designated as the reply ranging measurement frame transmitted by device #2. Each device must take two measurements: one when the ranging measurement frame is sent ($T_i$, where $i$ = 1, 2), and one when the ranging measurement frame is received ($R_i$, where $i$ = 1, 2). Next, each device must apply the ranging calibration constants (see 14.5) to account for signal processing delays through the transmit and receive chains:

$$T_{ic} = T_i + \text{RANGING_TRANSMIT_DELAY}, \tag{49}$$

$$R_{ic} = R_i - \text{RANGING_RECEIVE_DELAY}, \tag{50}$$

where $i$ = 1, 2 and where $T_{ic}$ and $R_{ic}$ are the calibrated time measurements. Finally, device #2 must deliver the measurement values $T_{2c}$ and $R_{2c}$ to device #1.

DRAFT



Copyright International Organization for Standardization
Provided by IHS under license with ISO
No reproduction or networking permitted without license from IHS
Not for Resale

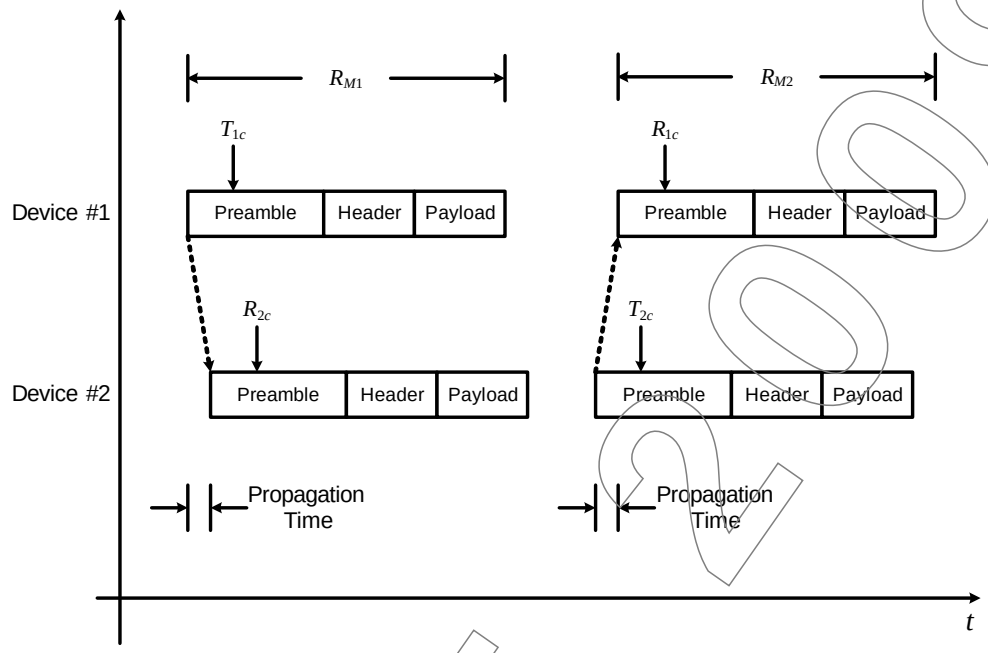


*Figure 30 - Example ranging measurement frame pair*

Given the four compensated time measurements, a simple range estimate, $D$, can be calculated as follows:

$$D = c \times \left[ \frac{(R_{2c} - T_{1c}) - (T_{2c} - R_{1c})}{2} \right], \tag{51}$$

where $c$ is the speed of light.

# 15 PHY and MAC service access points (informative)

This informative clause presents one conceptual interface to illustrate the functionality of a device that implements this specification. It is not intended for physical implementation or as a computer language interface.

Service access points (SAPs) are provided for data transfer and for management of the physical (PHY) layer and medium access control (MAC) sublayer.

The reference model in Figure 31 illustrates the logical entities and the relationships between them.

All SAPs are logical interfaces and do not necessarily imply a particular implementation or an exposed interface.

The PHY provides data services to the MAC sublayer through the PHY service access point (SAP). These services are described in this Clause in terms of PHY primitives exchanged between the MAC and the PHY via the PHY SAP.



Copyright International Organization for Standardization
Provided by IHS under license with ISO
No reproduction or networking permitted without license from IHS
Not for Resale

The MAC provides data services to the MAC client through the MAC SAP. These services are described in this Clause in terms of MAC primitives exchanged between the MAC and the MAC client via the MAC SAP.

Both the MAC sublayer and the PHY layer conceptually include management entities, called the MAC sublayer management entity (MLME) and physical layer management entity (PLME). These entities provide the layer management service interfaces for the layer management functions. For management of the MAC and PHY, a device management entity (DME) should be present within each device. The PLME and MLME provide management services to the DME through the PLME and MLME SAPs. The DME is a layer-independent entity that may be viewed as residing in a separate management plane or as residing "off to the side." The DME is outside the scope of this Standard, but this entity may be viewed as being responsible for such functions as the gathering of layer-dependent status from the various layer management entities and similarly setting the value of layer-specific parameters. The DME typically performs such functions on behalf of the general system management entities and implements Standard management protocols

.

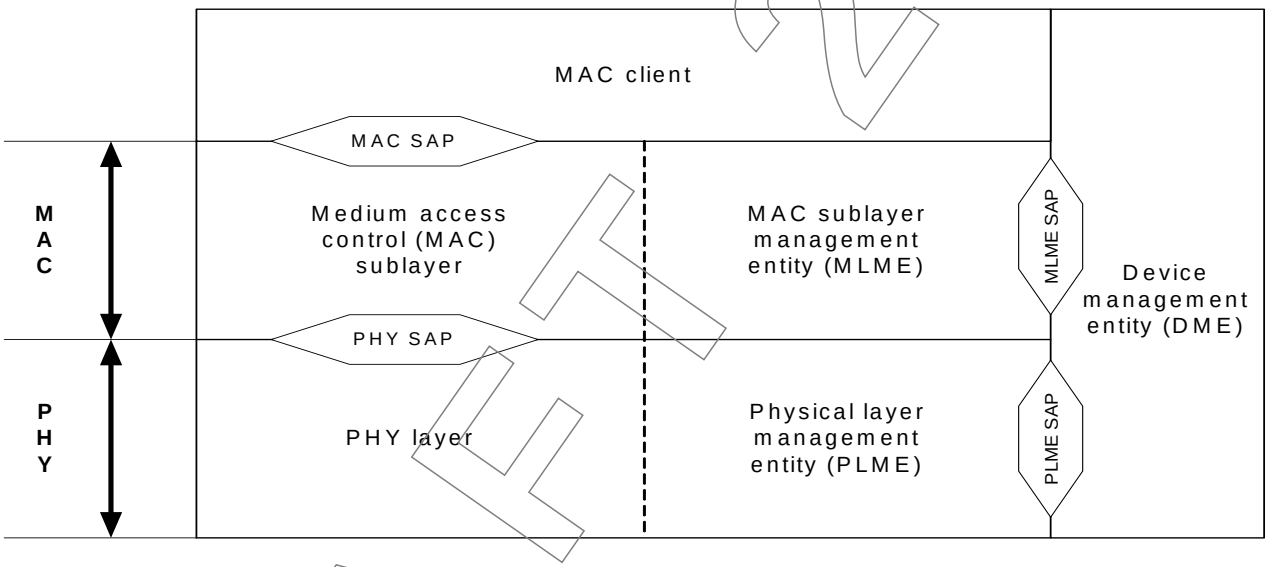


*Figure 31 - The SAP reference model used in this Standard*

## 15.1 Generic MIB management primitives

The management information specific to the PHY layer or the MAC sublayer is represented in a management information base (MIB). Devices are not intended to be managed across a network. Devices use the management information to ascertain and control certain characteristics of the PHY layer and MAC sublayer.

The management entity is viewed as "containing" the MIB. The MIB-related management primitives exchanged across the management SAP allow the DME to either "GET" the value of a MIB attribute, or to "SET" the value of a MIB attribute. The invocation of a SET.request primitive may require the PHY layer or the MAC sublayer to perform defined actions.

The GET and SET primitives are represented as requests with associated confirm primitives.

DRAFT 2009



Copyright International Organization for Standardization
Provided by IHS under license with ISO
No reproduction or networking permitted without license from IHS
Not for Resale

The primitives for the PHY layer management SAP are prefixed by PLME and for the MAC sublayer are prefixed by MLME. XX in the table and following Clauses denotes MLME or PLME. The primitives are summarized in Table 50.

Table 50 - Summary of generic management primitives

| Name | Request | Confirm |
|---|---|---|
| XX-GET | 15.1.1 | 15.1.2 |
| XX-SET | 15.1.3 | 15.1.4 |

The parameters used for these primitives are defined in Table 51.

Table 51- Generic management primitive parameters

| Name | Type | Valid range | Description |
|---|---|---|---|
| MIBattribute | Octet string | Any MIB attribute as defined in 15.3 or 15.5 | The name of the MIB attribute |
| MIBvalue | Variable | As defined in 15.3 or 15.5 | The value of the MIB attribute |
| ResultCode | Enumeration | SUCCESS, INVALID_MIB_ATTRIBUTE_NAME, INVALID_MIB_ATTRIBUTE_VALUE, READ_ONLY_MIB_ATTRIBUTE, WRITE_ONLY_MIB_ATTRIBUTE | Indicates the result of the PLME or MLME request |

### 15.1.1 XX-GET.request

This primitive requests information about a given attribute. The definition of this primitive is:

```
XX-GET.request(
    MIBattribute
    )
```

The primitive parameter is defined in Table 51.

#### 15.1.1.1 When generated

This primitive is generated by the DME to obtain information from the PHY or MAC.

#### 15.1.1.2 Effect of receipt

The PLME or MLME attempts to retrieve the requested PHY or MAC attribute from its database and responds with XX-GET.confirm that gives the result.

### 15.1.2 XX-GET.confirm

This primitive reports the results of an information request about the PHY or MAC. The definition of this primitive is:

```
XX-GET.confirm(
    ResultCode,
    MIBattribute,
    MIBvalue
    )
```

The primitive parameters are defined in Table 51.



Copyright International Organization for Standardization
Provided by IHS under license with ISO
No reproduction or networking permitted without license from IHS
Not for Resale

#### 15.1.2.1 When generated

This primitive is generated in response to an XX-GET.request by the DME.

#### 15.1.2.2 Effect of receipt

The primitive returns the appropriate MIB attribute value if the ResultCode is SUCCESS; otherwise it returns an error indication in the ResultCode. Possible values of the ResultCode that would indicate an error are INVALID_MIB_ATTRIBUTE_NAME and WRITE_ONLY_MIB_ATTRIBUTE.

### 15.1.3 XX-SET.request

This primitive attempts to set the indicated MIB attribute to the given value. The definition of this primitive is:

```
XX-SET.request(
    MIBattribute,
    MIBvalue
    )
```

The primitive parameters are defined in Table 51.

#### 15.1.3.1 When generated

This primitive is generated by the DME to set the indicated MIB attribute.

#### 15.1.3.2 Effect of receipt

The PLME or MLME attempts to set the requested MIB attribute in its database. If this MIB attribute implies a specific action, then this requests that the action be performed. The PLME or MLME responds with XX-SET.confirm that gives the result.

### 15.1.4 XX-SET.confirm

This primitive reports the results of an attempt to set the value of an attribute in the MIB. The definition of this primitive is:

```
XX-SET.confirm(
    ResultCode,
    MIBattribute
    )
```

The primitive parameters are defined in Table 51.

#### 15.1.4.1 When generated

This primitive is generated in response to an XX-SET.request by the DME.

#### 15.1.4.2 Effect of receipt

If the ResultCode is SUCCESS, this confirms that the indicated MIB attribute was set to the requested value; otherwise it returns an error condition in the ResultCode. If this MIBattribute implies a specific action, then this confirms that the action was performed. Possible ResultCodes for an error are:

- INVALID_MIB_ATTRIBUTE_NAME
- INVALID_MIB_ATTRIBUTE_VALUE
- READ_ONLY_MIB_ATTRIBUTE

DRAFT 2009



Copyright International Organization for Standardization
Provided by IHS under license with ISO
No reproduction or networking permitted without license from IHS
Not for Resale

## 15.2 PHY SAP interface

Table 52 lists the PHY SAP primitives for peer-to-peer interactions. Table 53 lists the PHY SAP primitives for sublayer-to-sublayer interactions only.

Table 52 - PHY-SAP Peer-to-Peer Service Primitives

| Primitive | Request | Indication | Response | Confirm |
|---|---|---|---|---|
| PHY-DATA | × | × | × | × |

Table 53 - PHY-SAP Sublayer-to-Sublayer Service Primitives

| Primitive | Request | Indication | Response | Confirm |
|---|---|---|---|---|
| PHY-TX-START | × | | | × |
| PHY-TX-END | × | | | × |
| PHY-CCA-START | × | | | × |
| PHY-CCA-END | × | | | × |
| PHY-RX-START | × | × | | × |
| PHY-RX-END | × | × | | × |

The remainder of this sub-clause describes the services provided using these PHY primitives.

### 15.2.1 Data transfer

This mechanism supports the procedure of transferring an octet of data from the MAC sublayer to the PHY layer or vice versa. Table 54 lists the parameters that appear in the primitives of this Clause.

Table 54 - PHY-DATA Primitive Parameters

| Name | Type | Valid Range | Description |
|---|---|---|---|
| DATA | Bit String | 0x00 - 0xFF | Appears in PHY-DATA.request and PHY-DATA.indication; specifies an octet of bit string for transfer from the MAC to the PHY or vice versa. |

#### 15.2.1.1 PHY-DATA.request

This primitive requests the transfer of an octet of data from the MAC to the PHY. The definition of this primitive is as follows:

```
PHY-DATA.request(
    DATA
)
```

##### 15.2.1.1.1 When generated

This primitive is generated by the MAC to request the transfer of a single octet of data from the MAC to the PHY. It may only be issued following a transmit initialization confirmation (PHY-TX-START.confirm) from the PHY.



Copyright International Organization for Standardization
Provided by IHS under license with ISO
No reproduction or networking permitted without license from IHS
Not for Resale

#### 15.2.1.1.2 Effect of receipt

The PHY transfers a single octet of data from the MAC. It subsequently issues a PHY-DATA.confirm to the MAC.

### 15.2.1.2 PHY-DATA.confirm

This primitive reports the transfer of an octet of data from the MAC to the PHY. The definition of this primitive is as follows:

```
PHY-DATA.confirm(
    )
```

#### 15.2.1.2.1 When generated

The primitive is generated by the PHY following the transfer of an octet of data from the MAC to the PHY.

#### 15.2.1.2.2 Effect of receipt

The MAC generates the next PHY-DATA.request to transfer the next octet of data to the PHY, if applicable.

### 15.2.1.3 PHY-DATA.indication

This primitive indicates a transfer of an octet of data from the PHY to the MAC. The definition of this primitive is as follows:

```
PHY-DATA.indication(
    DATA
    )
```

#### 15.2.1.3.1 When generated

This primitive is generated by a receiving PHY layer to transfer an octet of available data to the local MAC sublayer. It may only be issued following a receive initialization confirmation (PHY-RX-START.confirm) from the PHY.

#### 15.2.1.3.2 Effect of receipt

The MAC transfers a single octet of data from the PHY. It subsequently issues a PHY-DATA.response to the PHY.

### 15.2.1.4 PHY-DATA.response

This primitive responds to the transfer of an octet of data from the PHY to the MAC. The definition of this primitive is as follows:

```
PHY-DATA.response(
    )
```

#### 15.2.1.4.1 When generated

The primitive is generated by the MAC to respond to the PHY after an octet of data has been transferred from the PHY to the MAC.

#### 15.2.1.4.2 Effect of receipt

The PHY will generate the next PHY-DATA.indication for the transfer of the next available octet of data to the MAC, if applicable.

## 15.2.2 PHY transmission control

This mechanism supports the procedure of controlling the start or end of a PHY transmission. Table 55 lists the parameters that appear in the primitives of this Clause via TXVECTOR.

DRAFT 2009



Copyright International Organization for Standardization
Provided by IHS under license with ISO
No reproduction or networking permitted without license from IHS
Not for Resale

Table 55 - TXVECTOR Parameters

| Name | Type | Valid Range | Description |
|---|---|---|---|
| LENGTH | Integer | 0 .. pMaxFramePayloadSize for standard mode;<br><br>1 .. pMaxFramePayloadSize for burst mode | Specifies the number of octets in the frame payload (which does not include the FCS, tail bits, and pad bits) that the MAC is requesting the PHY to transmit. |
| RATE | Bit String | 5 bits | Specifies the data rate at which the frame body is to be transmitted (see Table 24). |
| BURST_MODE | Enumeration | ZERO = Standard Mode;<br><br>ONE = Burst Mode | Indicates whether the transmission is in the middle of a burst, i.e., whether the current PPDU will be followed by another PPDU transmitted by this device with a MIFS separation. |
| PREAMBLE_TYPE | Enumeration | ZERO = Standard Preamble;<br><br>ONE = Burst Preamble | Specifies the type of preamble for the next PPDU when BURSTMODE is set to ONE; Reserved when BURSTMODE is set to ZERO. |
| SCRAMBLER | Bit String | 2 bits | Provides a 2-bit value to initialize the scrambler for the current PPDU transmission (see Table 29). |
| TXPWR_LEVEL | Integer | 0 - 7 | Specifies a transmit power attenuation for the current PPDU transmission (see Table 44). |
| TX_TFC | Bit String | 4 bits | Specifies the TFC code used for transmission of the current packet (see Table 27). |
| BG | Bit String | 3 bits | Specifies the Band Group used for transmission of the current packet (see Table 28). |
| MAC_HEADER | Octet String | 10 octets | Provides the MAC header for the current PPDU for transmission. |
| TN | Bit String | 384 bits | Specifies nulled frequency carriers (see 9.2) |

#### 15.2.2.1 PHY-TX-START.request

This primitive requests the local PHY layer to start the transmission of a PPDU onto the wireless medium. The definition of this primitive is as follows:

```
PHY-TX-START.request(
    TXVECTOR
    )
```

DRAFT 2.0



Copyright International Organization for Standardization
Provided by IHS under license with ISO
No reproduction or networking permitted without license from IHS
Not for Resale

#### 15.2.2.1.1 When generated

The primitive is generated by the MAC sublayer to initiate the transmission of a PPDU by the local PHY layer onto the wireless medium.

#### 15.2.2.1.2 Effect of receipt

The PHY begins transmitting a PLCP preamble. It subsequently issues a PHY-TX-START.confirm to the MAC.

### 15.2.2.2 PHY-TX-START.confirm

This primitive reports the start of the PLCP preamble transmission by the PHY. The definition of this primitive is as follows:

```
PHY-TX-START.confirm(
    )
```

#### 15.2.2.2.1 When generated

This primitive is generated by the PHY to indicate to the MAC the start of transmission of the PPDU onto the wireless medium.

#### 15.2.2.2.2 Effect of receipt

The MAC proceeds to issue PHY-DATA.request primitives to transfer the TXVECTOR and frame body, if any, to the PHY when they are available, or to issue a PHY-TX-END.request primitive to end PHY's transmission.

### 15.2.2.3 PHY-TX-END.request

This primitive requests the local PHY layer to end the transmission. The definition of this primitive is as follows:

```
PHY-TX-END.request(
    )
```

#### 15.2.2.3.1 When generated

This primitive is generated by the MAC following reception of the last PHY-DATA.confirm from the PHY for the current MPDU transfer.

#### 15.2.2.3.2 Effect of receipt

The PHY stops the transmission and subsequently issues a PHY-TX-END.confirm to the MAC.

### 15.2.2.4 PHY-TX-END.confirm

This primitive reports the PHY's exit from the transmission. The definition of this primitive is as follows:

```
PHY-TX-END.confirm(
    )
```

#### 15.2.2.4.1 When generated

This primitive is generated by the PHY upon stopping the local transmission.

#### 15.2.2.4.2 Effect of receipt

The MAC is in a position to initiate the next transmit, receiver, or power management operation.

## 15.2.3 PHY reception control

This mechanism supports the procedure of controlling the start or end of a PHY reception. Table 56 lists the parameters that appear in the primitives of this Clause via RXVECTOR.

DRAFT 2009



Copyright International Organization for Standardization
Provided by IHS under license with ISO
No reproduction or networking permitted without license from IHS
Not for Resale

Table 56 - RXVECTOR Parameters

| Name | Type | Valid Range | Description |
|---|---|---|---|
| LENGTH | Integer | 0 .. pMaxFramePayloadSize for standard mode;<br><br>1 .. pMaxFramePayloadSize for burst mode | Specifies the number of octets in the frame payload (which does not include the FCS, tail bits, and pad bits) that the PHY will be transferring to the MAC. |
| RATE | Bit String | 5 bits | Specifies the data rate at which the frame body is received (see Table 24). |
| BURST_MODE | Enumeration | ZERO = Standard Mode;<br><br>ONE = Burst Mode | Indicates whether the reception is in the middle of a burst, i.e., whether the current PPDU will be followed by another PPDU transmitted by the same device with a MIFS separation. |
| PREAMBLE_TYPE | Enumeration | ZERO = Standard Preamble;<br><br>ONE = Burst Preamble | Specifies the type of preamble for the next PPDU when BURSTMODE is set to ONE; Reserved when BURSTMODE is set to ZERO. |
| TX_TFC | Bit String | 4 bits | Specifies the TFC code used for transmission of the current packet (see Table 27). |
| BG | Bit String | 3 bits | Specifies the Band Group used for transmission of the current packet (see Table 28). |
| MAC_HEADER | Octet String | 10 Octets | Provides the MAC header for the received PPDU. |
| HEADER_ERROR | Integer | 0 - 255 | Value = 0: HCS and all fields valid<br>Bit 4 = 1: HCS invalid<br>Bit 3 = 1: Unsupported data rate<br>Bit 2 = 1: wrong channel |
| RSSI | Integer | 0 .. RSSIMaximum | Provides the receive signal strength indication, in decibels, a measure of the energy observed at the antenna used to receive the PLCP preamble of the current PPDU, and a mono-tonically increasing function of the received power. |
| LQI | Bit String | 8 bits | Provides a monotonically increasing measure of the link quality as assessed by the PHY (see Table 49). |

#### 15.2.3.1 PHY-RX-START.request

This primitive requests the local PHY layer to start reception. The definition of this primitive is as follows:

```
PHY-RX-START.request(
    )
```

DRAFT



Copyright International Organization for Standardization
Provided by IHS under license with ISO
No reproduction or networking permitted without license from IHS
Not for Resale

#### 15.2.3.1.1 When generated

The primitive is generated by the MAC sublayer to initiate or continue the acquisition of a PLCP preamble by the local PHY layer for an anticipated PPDU reception.

#### 15.2.3.1.2 Effect of receipt

The PHY begins PLCP preamble acquisition. It subsequently issues a PHY-RX-START.confirm to the MAC.

### 15.2.3.2 PHY-RX-START.indication

This primitive indicates acquisition of a PLCP preamble by the local PHY layer. The definition of this primitive is as follows:

```
PHY-RX-START.indication(
    )
```

#### 15.2.3.2.1 When generated

This primitive is generated by a receiving PHY layer upon detecting the end of the synchronization sequence of a PLCP preamble.

#### 15.2.3.2.2 Effect of receipt

The MAC is provided with a reference time for determining the start of the received frame on the local air interface.

### 15.2.3.3 PHY-RX-START.confirm

This primitive reports reception of the PLCP header by the PHY. The definition of this primitive is as follows:

```
PHY-RX-START.confirm(
    RXVECTOR
    )
```

#### 15.2.3.3.1 When generated

This primitive is generated by the PHY following complete reception of the PLCP header or a timeout.

#### 15.2.3.3.2 Effect of receipt

If the value of HEADER_ERROR is zero and the value of LENGTH is non-zero then the MAC is in a position to receive PHY-DATA.request primitives for the transfer of the RXVECTOR and frame body, if any, or issue a PHY-RX-END.request to abort the receive operation.

### 15.2.3.4 PHY-RX-END.request

This primitive requests the local PHY layer to end reception. The definition of this primitive is as follows:

```
PHY-RX-END.request(
    )
```

#### 15.2.3.4.1 When generated

This primitive is generated by the MAC following reception of the last PHY-DATA.indication from the PHY for the anticipated receive MPDU transfer.

#### 15.2.3.4.2 Effect of receipt

The PHY stops the reception and issues a PHY-TX-END.confirm to the MAC.

DRAFT 2009



Copyright International Organization for Standardization
Provided by IHS under license with ISO
No reproduction or networking permitted without license from IHS
Not for Resale

#### 15.2.3.5 PHY-RX-END.indication

This primitive indicates completion of a PPDU reception from the wireless medium. The definition of this primitive is as follows:

```
PHY-RX-END.indication(

    )
```

##### 15.2.3.5.1 When generated

This primitive is generated by a receiving PHY layer upon receiving the complete PPDU from the wireless medium.

##### 15.2.3.5.2 Effect of receipt

The MAC is provided with a reference time for determining the end of the received frame on the local air interface.

#### 15.2.3.6 PHY-RX-END.confirm

This primitive reports the PHY's exit from reception. The definition of this primitive is as follows:

```
PHY-RX-END.confirm(

    )
```

##### 15.2.3.6.1 When generated

This primitive is generated by the PHY upon stopping reception.

##### 15.2.3.6.2 Effect of receipt

The MAC is in a position to initiate the next transmit, receiver, or power management operation.

### 15.2.4 PHY CCA control

This mechanism supports the procedure of controlling the start or end of a PHY CCA. There are no parameters that appear in the primitives of this Clause.

#### 15.2.4.1 PHY-CCA-START.request

This primitive requests the local PHY layer to start its CCA operation. The definition of this primitive is as follows:

```
PHY-CCA-START.request(

    )
```

##### 15.2.4.1.1 When generated

This primitive is generated by the MAC sublayer to initiate the CCA by the PHY layer.

##### 15.2.4.1.2 Effect of receipt

The PHY starts its CCA operation and reports the CCA result in the PHY MIB pCCAStatus attribute. It subsequently issues a PHY-CCA-START.confirm to the MAC. The PHY updates the CCAStatus value whenever the CCA result is changed, until a subsequent PHY-CCA-END.request is issued by the MAC.

#### 15.2.4.2 PHY-CCA-START.confirm

This primitive reports the start of the CCA operation by the PHY. The definition of this primitive is as follows:

```
PHY-CCA-START.confirm(

    )
```

DRAFT 2009



Copyright International Organization for Standardization
Provided by IHS under license with ISO
No reproduction or networking permitted without license from IHS
Not for Resale

#### 15.2.4.2.1 When generated

This primitive is generated by the PHY to indicate to the MAC the start of the CCA.

#### 15.2.4.2.2 Effect of receipt

The MAC/MLME may proceed to issue generic management primitives PLME-GET (CCAStatus) to obtain and update the CCA result.

### 15.2.4.3 PHY-CCA-END.request

This primitive requests the local PHY layer to end the CCA operation. The definition of this primitive is as follows:

```
PHY-CCA-END.request(
    )
```

#### 15.2.4.3.1 When generated

This primitive is generated by the MAC whenever CCA is no longer needed.

#### 15.2.4.3.2 Effect of receipt

The PHY stops the CCA operation.

### 15.2.4.4 PHY-CCA-END.confirm

This primitive reports the end of the CCA operation by the PHY. The definition of this primitive is as follows:

```
PHY-CCA-END.confirm(
    )
```

#### 15.2.4.4.1 When generated

This primitive is generated by the PHY upon stopping the CCA operation.

#### 15.2.4.4.2 Effect of receipt

The MAC stops issuing generic management primitives PLME-GET (pCCAStatus) to obtain the CCA result.

## 15.3 PLME SAP interface

The PHY management service is provided using the generic management service primitives PLME-GET and PLME-SET operating on PHY MIB attributes defined in Table 57 and Table 58, and the PLME SAP Service Primitives operating on not-specific PHY MIB attributes as listed in Table 60.

Table 57 - PHY MIB Attributes

| Name | Type | Valid Range | **Description** |
|---|---|---|---|
| pMaxFramePayloadSize | Integer | 4 095 | Specifies the maximum allowed length of the frame payload (which does not include an FCS) in any MPDU. |
| pPowerState | Enumeration | SLEEP, STANDBY, READY | Specifies the power state of the PHY. |
| pCCAStatus | Enumeration | CHANNEL_BUSY, CHANNEL_CLEAR | Indicates the medium activity of the channel. |

DRAFT 2009



Copyright International Organization for Standardization
Provided by IHS under license with ISO
No reproduction or networking permitted without license from IHS
Not for Resale

Table 58 - PHY MIB Ranging Attributes

| Name | Type | Valid Range | Description |
|---|---|---|---|
| pRCLKOptions | Integer | See Table 59 | Specifies the ranging support capabilities.<br><br>Value set to 0 if ranging is not support.<br><br>bit 0: set if ranging is supported;<br>bit 1: set if a 528 MHz timer is used;<br>bit 2: set if a 1 056 MHz timer is used;<br>bit 3: set if a 2 112 MHz timer is used;<br>bit 4: set if a 4 224 MHz timer is used;<br>bit 5: set if pRangingTimer bits [23:18] are active;<br>bit 6: set if pRangingTimer bits [31:24] are active. |
| pRCLKTolerance | Integer | 0 – 255 | Specifies the PHY ranging timer accuracy in PPM. |
| pRangingTimer | Integer | 0 – ($2^{31}$-1) | Specifies the ranging timer value via a 32-bit unsigned integer.<br><br>If bit 4 of pRCLKOptions is 0, Timer[0] = 0.<br>If bit 3 of pRCLKOptions is 0, Timer[1] = 0.<br>If bit 2 of pRCLKOptions is 0, Timer[2] = 0.<br>If bit 5 of pRCLKOptions is 0, Timer[23:18] = 0×00.<br>If bit 6 of pRCLKOptions is 0, Timer[31:24] = 0×00. |

Table 59 - Ranging pRCLKOptions Valid Values

| Value (Hex) | Active Timer Bits | Clock Frequency (MHz) | Timer Span |
|---|---|---|---|
| 00 | N/A | N/A | N/A |
| 03 | [17:3] | 528 | 62,1 μs |
| 05 | [17:2] | 1 056 | 62,1 μs |
| 09 | [17:1] | 2 112 | 62,1 μs |
| 11 | [17:0] | 4 224 | 62,1 μs |
| 23 | [23:3] | 528 | 3,97 ms |
| 25 | [23:2] | 1 056 | 3,97 ms |
| 29 | [23:1] | 2 112 | 3,97 ms |
| 31 | [23:0] | 4 224 | 3,97 ms |
| 63 | [31:3] | 528 | 1,02 s |
| 65 | [31:2] | 1 056 | 1,02 s |
| 69 | [31:1] | 2 112 | 1,02 s |
| 71 | [31:0] | 4 224 | 1,02 s |

PRIV09



Copyright International Organization for Standardization
Provided by IHS under license with ISO
No reproduction or networking permitted without license from IHS
Not for Resale

Table 60 - PLME SAP Service Primitives

| Primitive | Request | Indicate | Response | Confirm |
|---|---|---|---|---|
| PLME-RESET | × | | | × |
| PLME-RANGING-TIMER-START | × | | | × |
| PLME-RANGING-TIMER-END | × | | | × |

### 15.3.1 PHY reset

This mechanism supports the procedure of resetting the PHY layer and its management entity.Table 61 lists the parameters that appear in the primitives of this Clause.

Table 61 - PLME-RESET Primitive Parameters

| Name | Type | Valid Range | Description |
|---|---|---|---|
| ResetResultCode | Enumeration | SUCCESS, FAILED | Indicates the result of the PHY reset procedure. |

#### 15.3.1.1 PLME-RESET.request

This primitive requests to reset the PHY data path and its management entity and MIB. The definition of this primitive is as follows:

```
PLME-RESET.request(
    )
```

##### 15.3.1.1.1 When generated

This primitive is generated by the MLME on behalf of itself or the DME whenever the PHY needs to be reset.

##### 15.3.1.1.2 Effect of receipt

The PHY resets both the transmission and reception, the CCA operation, and its management entity and MIB. The PLME subsequently issues a PHY-RESET.confirm to the MLME.

#### 15.3.1.2 PLME-RESET.confirm

This primitive reports the results of a reset procedure. The definition of this primitive is as follows:

```
PLME-RESET.confirm(
    ResetResultCode
    )
```

##### 15.3.1.2.1 When generated

This primitive is generated by the PLME as a result of a PLME-RESET.request.

##### 15.3.1.2.2 Effect of receipt

The DME or MLME is notified of the results of the PHY reset procedure.

### 15.3.2 PHY ranging timer control

This mechanism supports the procedure of enabling or disabling the PHY ranging timer. There are no parameters that appear in the primitives of this Clause.



Copyright International Organization for Standardization
Provided by IHS under license with ISO
No reproduction or networking permitted without license from IHS
Not for Resale

#### 15.3.2.1 PLME-RANGING-TIMER-START.request

This primitive requests to enable the PHY ranging timer. The definition of this primitive is as follows:

```
PLME-RANGING-TIMER-START.request(

    )
```

##### 15.3.2.1.1 When generated

This primitive is generated by the MLME on behalf of itself or the DME to enable the PHY ranging timer.

##### 15.3.2.1.2 Effect of receipt

The PLME enables the PHY ranging timer. The PHY captures the value of the ranging timer in the MIB attribute pRangingTimer. It subsequently issues a PHY-RANGING-TIMER-START.confirm to the MLME.

#### 15.3.2.2 PLME-RANGING-TIMER-START.confirm

This primitive reports the enabling of the PHY ranging timer. The definition of this primitive is as follows:

```
PLME-RANGING-TIMER-START.confirm(

    )
```

##### 15.3.2.2.1 When generated

This primitive is generated by the PLME as a result of a PLME-RANGING-TIMER-START.request.

##### 15.3.2.2.2 Effect of receipt

The DME or MLME is notified of the enabling of the PHY ranging timer.

#### 15.3.2.3 PLME-RANGING-TIMER-END.request

This primitive requests to disable the PHY ranging timer. The definition of this primitive is as follows:

```
PLME-RANGING-TIMER-END.request(

    )
```

##### 15.3.2.3.1 When generated

This primitive is generated by the MLME on behalf of itself or the DME to disable the PHY ranging timer.

##### 15.3.2.3.2 Effect of receipt

The PLME disables the PHY ranging timer. It subsequently issues a PHY-RANGING-TIMER-END.confirm to the MLME.

#### 15.3.2.4 PLME-RANGING-TIMER-END.confirm

This primitive reports the disabling of the PHY ranging timer. The definition of this primitive is as follows:

```
PLME-RANGING-TIMER-END.confirm(

    )
```

##### 15.3.2.4.1 When generated

This primitive is generated by the PLME as a result of a PLME-RANGING-TIMER-START.request.

DRAFT 2009



Copyright International Organization for Standardization
Provided by IHS under license with ISO
No reproduction or networking permitted without license from IHS
Not for Resale

#### 15.3.2.4.2 Effect of receipt

The DME or MLME is notified of the disabling of the PHY ranging timer. The DME or MLME ceases to get the value of the MIB attribute pRangingTimer.

## 15.4 MAC sublayer management primitives

The MAC sublayer management primitives are described in 15.1, Generic MIB management primitives.

## 15.5 MAC management information base (MIB)

The MAC MIB objects listed in Table 62 may be read and written using the MLME-GET and MLME-SET primitives.

Table 62 - MAC MIB attributes

| Managed Object | Range |
|---|---|
| mDevAddType | {Private, Generated} |
| mSecurityModeSelected | {0,1,2} |

## 15.6 MLME SAP interface

### 15.6.1 Reset

The service primitives in this Clause are provided for the DME to reset the MAC sublayer. The primitives covered in this Clause are listed in Table 63.

Table 63 - Reset primitives

| Service Primitive | Request | Indication | Response | Confirm |
|---|---|---|---|---|
| MLME-RESET | 15.6.1.1 | | | 15.6.1.2 |

Table 64 lists the parameters that appear in the primitives of this Clause.

Table 64 - Reset primitive parameters

| Name | Type | Valid range | Description |
|---|---|---|---|
| ResultCode | Enumeration | SUCCESS, FAILURE | Appears in MLME-RESET.confirm only; indicates the result of the corresponding MLME RESET.request. |

#### 15.6.1.1 MLME-RESET.request

This primitive requests to reset the MAC sublayer data path and its management entity and MIB.

The definition of this primitive is:

```
MLME-RESET.request(
    )
```

##### 15.6.1.1.1 When generated

This primitive is generated by the DME when it needs to reset the MAC sublayer.

##### 15.6.1.1.2 Effect of receipt

The MAC sublayer resets both the transmit and receive state machines, its management entity and MIB to the default power on states or default values. The MAC sublayer discards all MSDUs and their fragments, if any, that are buffered for



Copyright International Organization for Standardization
Provided by IHS under license with ISO
No reproduction or networking permitted without license from IHS
Not for Resale

transmission to a peer MAC sublayer or delivery to the MAC client. Until the MLME receives other primitives, the MAC sublayer will not perform any transmit or receive operations. The MLME issues an MLME-RESET.confirm when the reset has completed, to reflect the results of the reset request.

#### 15.6.1.2 MLME-RESET.confirm

This primitive reports the results of a reset procedure.

The definition of this primitive is:

```
MLME-RESET.confirm(
    ResultCode
    )
```

##### 15.6.1.2.1 When generated

This primitive is generated by the MLME as a result of an MLME-RESET.request at the completion of the reset operation.

##### 15.6.1.2.2 Effect of receipt

The DME is notified of the results of the reset procedure.

### 15.6.2 Scan

The service primitives in this Clause are provided for the DME to perform channel scan operations. The primitives covered in this Clause are listed in Table 65.

Table 65 - Scan primitives

| Service Primitive | Request | Indication | Response | Confirm |
|---|---|---|---|---|
| MLME-SCAN | 15.6.2.1 | | | 15.6.2.2 |
| MLME-SCAN-PLCP-HEADER-RECEIVED | | 15.6.2.3 | | |

Table 66 lists the parameters that appear in the primitives of this Clause.

Table 66 - Scan primitive parameters

| Name | Type | Valid range | Description |
|---|---|---|---|
| ChannelNumber | Enumeration | PHY dependent | The physical channel to be scanned. |
| BPSTOffset | Integer | 0 - 65 535 | The offset of the start of a received frame relative to the BPST of the device, measured in microseconds. |
| LQI | Integer | 0 - 255 | Link quality indication. |
| PLCPHeader | PLCP header | | The PLCP header of the received frame. |
| ResultCode | Enumeration | SUCCESS, FAILURE | Indicates the result of the corresponding request. |
| RSSI | Integer | 0 - 255 | Receive signal strength indication. |
| ScanState | Enumeration | SCAN_ONLY, SCAN_OUTSIDE_BP, SCAN_WHILE_INACTIVE, SCAN_DISABLED | Sets the scan state in the MLME-SCAN primitive. |



Copyright International Organization for Standardization
Provided by IHS under license with ISO
No reproduction or networking permitted without license from IHS
Not for Resale

#### 15.6.2.1 MLME-SCAN.request

This primitive begins a scan operation.

The definition of this primitive is:

```
MLME-SCAN.request(
    ChannelNumber,
    ScanState
    )
```

ScanState indicates the requested scanning state. Table 67 shows the possible scan types:

Table 67 - Scan State parameter values

| ScanState Value | Description |
|---|---|
| SCAN_ONLY | Scan only. No other transmit or receive operation is performed until the scan is completed. |
| SCAN_OUTSIDE_BP | Scan at all times except in the BP. |
| SCAN_WHILE_INACTIVE | Scan only when not scheduled to transmit or receive. |
| SCAN_DISABLED | Scanning is disabled. This is the default scanning state on power up or after an MLME-RESET request completes successfully. |

The ChannelNumber indicates the PHY channel to use during the scan.

##### 15.6.2.1.1 When generated

This primitive is generated by the DME to change the scanning state.

##### 15.6.2.1.2 Effect of receipt

The MLME initiates a change of the scanning state to the new state indicated by the request.

#### 15.6.2.2 MLME-SCAN.confirm

This primitive confirms that a scanning state change initiated by the MLME-SCAN request has been successfully completed or that the state change attempt has failed.

The definition of this primitive is:

```
MLME-SCAN.confirm(
    ResultCode
    )
```

ResultCode indicates whether the operation to change the scan state has successfully completed. If changing the scan state does not succeed, it is a vendor specific decision when to time out the operation and return FAILURE.

##### 15.6.2.2.1 When generated

This primitive is generated by the MLME as a result of an MLME-SCAN.request once the requested scan state has been entered or the operation has failed.

##### 15.6.2.2.2 Effect of receipt

The recipient is notified of the results of the procedure of changing the scan state.

DRAFT 0.09



Copyright International Organization for Standardization
Provided by IHS under license with ISO
No reproduction or networking permitted without license from IHS
Not for Resale

#### 15.6.2.3 MLME-SCAN-PLCP-HEADER-RECEIVED.indication

This indication informs the DME that a PLCP header was received. This indication only occurs when the scan state is not SCAN_DISABLED.

The definition of this primitive is:

```
MLME-SCAN-PLCP-HEADER-RECEIVED.indication(
    PLCPHeader,
    ChannelNumber,
    BPSTOffset,
    LQI,
    RSSI
    )
```

Channel Number is the PHY channel on which the PLCP header was received.

##### 15.6.2.3.1 When generated

This indication is generated by the MLME when the device receives a PLCP header and the MAC sublayer is not in the SCAN_DISABLED state.

##### 15.6.2.3.2 Effect of receipt

The recipient is notified that a PLCP header has been received.

### 15.6.3 Beacon transmission and reception

The service primitives in this Clause are provided for the DME to control beacon transmission and reception. The primitives covered in this Clause are listed in Table 68.

Table 68 - Beacon primitives

| Service Primitive | Request | Indication | Response | Confirm |
|---|---|---|---|---|
| MLME-BEACON-START | 15.6.3.1 | | | 15.6.3.2 |
| MLME-BEACON-STOP | 15.6.3.3 | | | 15.6.3.4 |
| MLME-BEACON-CHANGE-CHANNEL | 15.6.3.5 | | | 15.6.3.6 |
| MLME-BEACON | | 15.6.3.7 | | |
| MLME-BEACON-MERGE-BP | 15.6.3.8 | 15.6.3.9 | | 15.6.3.10 |

DRAFT 2009



Copyright International Organization for Standardization
Provided by IHS under license with ISO
No reproduction or networking permitted without license from IHS
Not for Resale

Table 69 lists the parameters that appear in the primitives of this Clause.

Table 69 - Beacon primitive parameters

| Name | Type | Valid range | Description |
|---|---|---|---|
| BeaconInfo | Array | Variable | A variable size array containing all information for a transmitted or received beacon |
| ChannelChangeIECount | Integer | 0 - 255 | The number of superframes in which to include a Channel Change IE prior to changing channels |
| ChannelNumber | Enumeration | PHY dependent | The physical channel on which the beacon will be transmitted or was received |
| BPMoveCountdown | Integer | 0 - 255 | The number of superframes before a BP merge commences, based on a neighbour's BP Switch IE |
| BPSTOffset | Integer | 0 - 65 535 | The offset of the start of a received beacon relative to the BPST of the device, measured in microseconds |
| BeaconType | Enumeration | NEIGHBOR, ALIEN, OWN | The type of beacon reported, indicating whether a received beacon was classified as a neighbour or an alien, or if the beacon was transmitted by the device |
| LQI | Integer | 0 - 255 | The relative value of the PHY-dependent link quality indication associated with a received frame |
| ResultCode | Enumeration | SUCCESS, FAILURE, FAILURE_NO_SLOTS | Indicates the result of the corresponding MLME-BEACON-START or MLME-BEACON-STOP request |
| RSSI | Integer | 0 - 255 | The relative value of the PHY-dependent received signal strength indication associated with a received frame |

#### 15.6.3.1 MLME-BEACON-START.request

This primitive instructs the MAC sublayer to begin beacon transmission on the specified channel.

The definition of this primitive is:

```
MLME-BEACON-START.request(
    ChannelNumber
)
```

ChannelNumber is the physical layer channel on which beacon transmission will begin.

##### 15.6.3.1.1 When generated

This primitive is generated by the DME to instruct the MAC sublayer to begin beacon transmission.



Copyright International Organization for Standardization
Provided by IHS under license with ISO
No reproduction or networking permitted without license from IHS
Not for Resale

#### 15.6.3.1.2 Effect of receipt

When the MLME receives the request it initiates the process of starting to transmit beacons on the indicated channel.

### 15.6.3.2 MLME-BEACON-START.confirm

This primitive confirms the completion of an MLME-BEACON-START request. This confirmation indicates whether the first beacon has been transmitted.

The definition of this primitive is:

```
MLME-BEACON-START.confirm(
    ResultCode
    )
```

ResultCode indicates whether beacons have begun to be successfully transmitted. If an operation to start beacon transmission is not succeeding, it is a vendor specific decision when to time out the operation and return FAILURE.

#### 15.6.3.2.1 When generated

This primitive is generated by the MLME as a result of an MLME-BEACON-START.request to indicate that the first beacon has been successfully transmitted or that the operation has failed.

#### 15.6.3.2.2 Effect of receipt

The recipient is notified of the results of the procedure of starting to transmit beacons.

### 15.6.3.3 MLME-BEACON-STOP.request

This primitive causes the MAC sublayer to stop transmitting beacons.

The definition of this primitive is:

```
MLME-BEACON-STOP.request(
    )
```

#### 15.6.3.3.1 When generated

This primitive is generated by the DME to stop beacon transmission that was started with the MLME-BEACON-START request.

#### 15.6.3.3.2 Effect of receipt

The MLME immediately initiates ending the transmission of beacons.

### 15.6.3.4 MLME-BEACON-STOP.confirm

This primitive confirms that beacon transmission has been stopped by the MLME after the DME issued the MLME-BEACON-STOP request.

The definition of this primitive is:

```
MLME-BEACON-STOP.confirm(
    ResultCode
    )
```

ResultCode indicates whether the beacon operation successfully stopped. If ending beacon transmission is not successful, it is a vendor specific decision when to time out the operation and return FAILURE.

DRAFT 2009



Copyright International Organization for Standardization
Provided by IHS under license with ISO
No reproduction or networking permitted without license from IHS
Not for Resale

#### 15.6.3.4.1 When generated

This primitive is generated by the MLME as a result of an MLME-BEACON-STOP.request once beacon transmission has been successfully stopped or the operation has failed.

#### 15.6.3.4.2 Effect of receipt

The recipient is notified of the results of the procedure of stopping beacon transmission. A successful confirmation indicates at least one BP has passed without a beacon being transmitted.

### 15.6.3.5 MLME-BEACON-CHANGE-CHANNEL.request

This primitive causes the MAC sublayer to change the channel on which it transmits beacons (and all other frames).

The definition of this primitive is:

```
MLME-BEACON-CHANGE-CHANNEL.request(
    ChannelNumber,
    ChannelChangeIECount
    )
```

#### 15.6.3.5.1 When generated

This primitive is generated by the DME to select a new channel for transmission.

#### 15.6.3.5.2 Effect of receipt

The MLME includes Channel Change IEs in zero or more superframes as specified by the DME. It changes the PHY channel it uses to the channel indicated by the ChannelNumber parameter at the end of the superframe in which the Channel Change Countdown field was zero, or at the end of the current superframe if the ChannelChangeIECount parameter is zero.

### 15.6.3.6 MLME-BEACON-CHANGE-CHANNEL.confirm

This primitive confirms that the MLME has changed PHY channels as a result of a MLME-BEACON-CHANGE-CHANNEL request.

The definition of this primitive is:

```
MLME-BEACON-CHANGE-CHANNEL.confirm(
    ResultCode
    )
```

ResultCode indicates whether the PHY channel was changed successfully. If changing the PHY channel is not successful, it is a vendor specific decision when to time out the operation and return FAILURE.

#### 15.6.3.6.1 When generated

This primitive is generated by the MLME as a result of an MLME-BEACON-CHANGE-CHANNEL.request once the PHY channel has been changed or the operation has failed.

#### 15.6.3.6.2 Effect of receipt

The recipient is notified of the results of the procedure of changing channels. A successful confirmation indicates at least one BP has passed with beacon transmission and reception on the new channel.

DRAFT 2009



Copyright International Organization for Standardization
Provided by IHS under license with ISO
No reproduction or networking permitted without license from IHS
Not for Resale

#### 15.6.3.7 MLME-BEACON.indication

This indication informs the DME that a beacon was received or transmitted. The indication occurs any time the device receives a beacon or transmits its own beacon.

The definition of this primitive is:

```
MLME-BEACON.indication(
    BeaconInfo,
    ChannelNumber,
    BPSTOffset,
    BeaconType,
    LQI,
    RSSI
    )
```

BeaconInfo is an array including the MAC Header, beacon parameters, and all information elements for the received or transmitted beacon. Channel Number is the PHY channel on which the beacon was received or transmitted.

If the device is active, the MAC sublayer always indicates at least one beacon, its own, during its BP.

##### 15.6.3.7.1 When generated

This indication is generated by the MLME when it determines it has transmitted or received a beacon frame. Beacon indications for received beacons can occur any time a device's receiver is enabled, whether scanning is enabled or not.

##### 15.6.3.7.2 Effect of receipt

The recipient is notified that a beacon has been received and provided with all information contained in the beacon.

#### 15.6.3.8 MLME-BEACON- MERGE-BP.request

This primitive allows the DME to request initiation of the merging process of two previously separate BPs.

The definition of this primitive is:

```
MLME-BEACON-MERGE-BP.request(
    BPSTOffset
    )
```

BPSTOffset identifies the BPST of the alien BP where the device will move.

##### 15.6.3.8.1 When generated

This primitive is generated by the DME to instruct the MAC sublayer to merge its BP with an alien BP.

##### 15.6.3.8.2 Effect of receipt

When the MLME receives this primitive, the device relocates its BP to the alien BP according to 17.2.6.3.

#### 15.6.3.9 MLME-BEACON-MERGE-BP.indication

This indication informs the DME that a neighbour has announced it will change its BPST as a result of a BP merge operation.

The definition of this primitive is:

```
MLME-BEACON-MERGE-BP.indication(
```

DRAFT 2009



Copyright International Organization for Standardization
Provided by IHS under license with ISO
No reproduction or networking permitted without license from IHS
Not for Resale

```
BPSTOffset,
BPMoveCountdown
)
```

#### 15.6.3.9.1 When generated

This indication is generated by the MLME when the device receives a BP Switch IE in a beacon from a neighbour.

#### 15.6.3.9.2 Effect of receipt

The recipient is notified that a BP Switch IE was received and a BP merge may result.

### 15.6.3.10 MLME-BEACON-MERGE-BP.confirm

This primitive confirms that a BP merge has completed or terminated.

The definition of this primitive is:

```
MLME-BEACON-MERGE-BP.confirm(
    ResultCode
    )
```

ResultCode indicates whether the merge operation successfully completed or was terminated.

#### 15.6.3.10.1 When generated

This primitive is generated by the MLME as a result of an MLME-BEACON-MERGE-BP.request once the BP merge operation has completed or terminated.

#### 15.6.3.10.2 Effect of receipt

The recipient is notified of the results of the BP merge procedure.

## 15.6.4 IE management

The service primitives in this Clause provide access to and control of information contained in certain IEs, for use by higher layers. The primitives covered in this Clause are listed in Table 70.

Table 70 - IE Management primitives

| Service Primitive | Request | Indication | Response | Confirm |
|---|---|---|---|---|
| MLME-SET-CAPABILITY-IE | 15.6.4.1 | | | 15.6.4.2 |
| MLME-IDENTIFICATION-IE | 15.6.4.3 | | | 15.6.4.4 |

Table 71 lists the parameters that appear in the primitives of this Clause.

Table 71 - IE Management primitive parameters

| Name | Type | Valid range | Description |
|---|---|---|---|
| CapIEData | Array | Variable | A variable size array containing Capabilities IE data |
| IdentificationIEData | Array | Variable | A variable size array containing the Identification IE data |
| ResultCode | Enumeration | SUCCESS, FAILURE | Indicates the result of the MLME-SET-CAPABILITIES-IE request |

### 15.6.4.1 MLME-SET-CAPABILITIES-IE.request

This primitive changes the content of the Capabilities IE in the beacon.



Copyright International Organization for Standardization
Provided by IHS under license with ISO
No reproduction or networking permitted without license from IHS
Not for Resale

The definition of this primitive is:

```
MLME-SET-CAPABILITIES-IE.request(
    CapIEData
    )
```

CapIEData is the data to use in the Capabilities IE in subsequent beacons.

#### 15.6.4.1.1 When generated

This primitive is generated by the DME to instruct the MAC sublayer to change the Capabilities IE content in the beacon.

#### 15.6.4.1.2 Effect of receipt

When the MLME receives the request it initiates changing the Capabilities IE content in the beacon.

### 15.6.4.2 MLME-SET-CAPABILITIES-IE.confirm

This primitive confirms the result of an operation to change the Capabilities IE content in the beacon in response to an MLME-SET-CAPABILITIES-IE request.

The definition of this primitive is:

```
MLME-SET-CAPABILITIES-IE.confirm(
    ResultCode
    )
```

ResultCode indicates the result of the attempt to change the Capabilities IE content in the beacon. If the Capabilities IE content can not be changed the primitive is generated with a FAILURE status.

#### 15.6.4.2.1 When generated

This primitive is generated by the MLME as a result of an MLME-SET-CAPABILITIES-IE request with a successful return status to indicate that the first beacon has been transmitted with the changed Capabilities IE content. If MLME-SET-CAPABILITIES-IE request was called when beacons were not being transmitted, a successful status indicates that the new Capabilities IE content will be in the beacon when the next beacon is sent.

#### 15.6.4.2.2 Effect of receipt

The recipient is notified of the results of the procedure of changing the Capabilities IE content in the beacon.

### 15.6.4.3 MLME-IDENTIFICATION-IE.request

This primitive controls the contents of the Identification IE in the beacon.

The definition of this primitive is:

```
MLME-IDENTIFICATION-IE.request(
    IdentificationIEData
    )
```

#### 15.6.4.3.1 When generated

This primitive is generated by the DME to instruct the MAC sublayer to change the device's Identification IE content.

#### 15.6.4.3.2 Effect of receipt

When the MLME receives the request it changes the Identification IE content.

DRAFT 2009

--`,,```,,,,````-`-`,,`,,`,`,,`---



Copyright International Organization for Standardization
Provided by IHS under license with ISO
No reproduction or networking permitted without license from IHS
Not for Resale

#### 15.6.4.4 MLME-IDENTIFICATION-IE.confirm

This primitive confirms the result of an operation to change the Identification IE content.

The definition of this primitive is:

```
MLME-IDENTIFICATION-IE.confirm(
    ResultCode
    )
```

ResultCode indicates the result of the attempt to change the Identification IE content. If the Identification IE content cannot be changed the primitive is generated with a FAILURE status.

##### 15.6.4.4.1 When generated

This primitive is generated by the MLME as a result of an MLME-IDENTIFICATION-IE.request with a successful return status to indicate that the new content is stored and will be used in the next beacon to contain an Identification IE.

##### 15.6.4.4.2 Effect of receipt

The recipient is notified of the results of the procedure of changing the Identification IE content.

### 15.6.5 PTK establishment

The mechanism supports the procedure of establishing a new PTK with a peer MAC sublayer. The primitives covered in this Clause are listed in Table 72.

Table 72 - PTK establishment primitives

| Service Primitive | Request | Indication | Response | Confirm |
|---|---|---|---|---|
| MLME-PTK | 15.6.5.1 | 15.6.5.2 | 15.6.5.3 | 15.6.5.4 |

DRAFT 2009



Copyright International Organization for Standardization
Provided by IHS under license with ISO
No reproduction or networking permitted without license from IHS
Not for Resale

Table 73 lists the parameters that appear in the primitives of this Clause.

Table 73 - PTK establishment primitive parameters

| Name | Type | Valid range | Description |
|---|---|---|---|
| SrcEUI | EUI-48 | Any valid unicast EUI-48 | Specifies the EUI-48 of the device requesting to establish a new PTK by a 4-way handshake as described in Clause 18 |
| DestEUI | EUI-48 | Any valid unicast EUI-48 | Specifies the EUI-48 of the device requested to establish a new PTK by a 4-way handshake as described in Clause 18 |
| MessageNumber | Integer | Any valid positive number as specified in Clause 18 | Specifies the number of the message being conveyed in the 4-way handshake |
| StatusCode | Integer | Any valid value as specified in Clause 18 | Specifies the status of the 4-way handshake |
| PTKID | Integer | A non-zero number as specified in Clause 18 | Specifies the TKID of the new PTK established by the 4-way handshake |
| MKID | Octet string | 16 octets as specified in Clause 18 | Identifies the master key used to establish a new PTK by a 4-way handshake |
| PTK | Octet string | 16 octets as specified in Clause 18 | Specifies the new PTK established by the 4-way handshake |
| PTKFailureTimeout | Integer | ≥1 | Specifies a time limit in microseconds after which the procedure of establishing a new PTK must be terminated |
| ResultCode | Enumeration | RESPONSE_RECEIVED, INVALID_PARAMETERS, TIMEOUT | Indicates the result of the corresponding MLME-PTK.request |

#### 15.6.5.1 MLME-PTK.request

This primitive requests establishment of a new PTK with a specified peer MAC sublayer as described in Clause 18.

The definition of this primitive is:

```
MLME-PTK.request(
    DestEUI,
    MessageNumber,
    StatusCode,
    PTKID,
    MKID,
    PTKFailureTimeout
    )
```

##### 15.6.5.1.1 When generated

This primitive is generated by the DME for the local MAC sublayer to start a 4-way handshake procedure to establish a new PTK with a specified peer MAC sublayer. This primitive is also generated by the DME for the local MAC sublayer to continue with an ongoing 4-way handshake procedure upon receiving a valid PTK command containing a Message Number of 2 and a StatusCode of zero.



Copyright International Organization for Standardization
Provided by IHS under license with ISO
No reproduction or networking permitted without license from IHS
Not for Resale

#### 15.6.5.1.2 Effect of receipt

The MAC sublayer initiates or continues with a 4-way handshake using the master key specified by the MKID parameter to establish a new PTK with a specified peer MAC sublayer specified by the DestEUI. If the MessageNumber in the MLME-PTK.request is 1, the MAC sublayer generates a new random number as the I-Nonce and transmits a PTK command containing the first message of the 4-way handshake to the peer MAC sublayer. If the MessageNumber in the MLME-PTK.request is 3, the MAC sublayer uses its I-Nonce generated for the first message of the same 4-way handshake and transmits a PTK command containing the third message of the 4-way handshake to the peer MAC sublayer. The MLME subsequently issues an MLME-PTK.confirm to reflect the results.

### 15.6.5.2 MLME-PTK.indication

This primitive reports the request or establishment of a new PTK with a specific peer MAC sublayer.

The definition of this primitive is:

```
MLME-PTK.indication(
    SrcEUI,
    MessageNumber,
    StatusCode,
    PTKID,
    PTK,
    MKID
    )
```

#### 15.6.5.2.1 When generated

This primitive is generated by the MLME as a result of the request or establishment of a new PTK with a specific peer MAC sublayer via a 4-way handshake procedure. Specifically, the primitive is generated by the MLME upon receiving a valid PTK command containing a Message Number of 1 or 3.

#### 15.6.5.2.2 Effect of receipt

The DME is notified of the request or establishment of a new PTK. The DME subsequently issues an MLME-PTK.response to reflect the actions taken.

If the MessageNumber in the MLME-PTK.indication is 1, the DME verifies that the proposed PTKID is not being used by the local MAC sublayer for any temporal key and that establishing a new PTK using the MKID with the requesting DME is an acceptable action. The DME includes the results of the verification in the StatusCode parameter of MLME-PTK.response.

If the MessageNumber in the MLME-PTK.indication is 3 and the StatusCode in the MLME-PTK.response is zero, the DME follows to issue an MLME- KEY-UPDATE.request.

### 15.6.5.3 MLME-PTK.response

This primitive responds to the request or establishment of a new PTK with a specific peer MAC sublayer.

The definition of this primitive is:

```
MLME-PTK.response(
    SrcEUI,
    MessageNumber,
    StatusCode,
    PTKID,
```

DRAFT 2009



Copyright International Organization for Standardization
Provided by IHS under license with ISO
No reproduction or networking permitted without license from IHS
Not for Resale

```
MKID
)
```

#### 15.6.5.3.1 When generated

This primitive is generated by the DME as a result of an MLME-PTK.indication reporting a valid request or establishment of a new PTK with a specific peer MAC sublayer via a 4-way handshake procedure.

#### 15.6.5.3.2 Effect of receipt

If the MessageNumber is 2, the MAC sublayer generates a new random number as the R-Nonce and transmits a PTK command containing the second message of the 4-way handshake to the specific peer MAC sublayer. If the MessageNumber is 4, the MAC sublayer uses its R-Nonce generated for the second message of the same 4-way handshake and transmits a PTK command containing the fourth message of the 4-way handshake to the specific peer MAC sublayer. The PTK command carries the StatusCode parameter in its Status Code field.

### 15.6.5.4 MLME-PTK.confirm

This primitive reports the results of the attempt to establish a new PTK with a specified peer MAC sublayer.

The definition of this primitive is:

```
MLME-PTK.confirm(
    DestEUI,
    MessageNumber,
    StatusCode,
    PTKID,
    PTK,
    MKID,
    ResultCode
    )
```

#### 15.6.5.4.1 When generated

This primitive is generated by the MLME as a result of an MLME-PTK.request to establish a new PTK with a specified peer MAC sublayer. Specifically, the primitive is generated by the MLME upon receiving a valid PTK command containing a Message Number of 2 or 4; or generated in case of INVALID_PARAMETERS or PTKFailureTimeout.

#### 15.6.5.4.2 Effect of receipt

The DME is notified of the intermediate or final results of the procedure to establish a new PTK with a specified peer MAC sublayer.

If the MessageNumber is 4, the StatusCode is zero, and the ResultCode is RESPONSE_RECEIVED, the DME follows to issue an MLME-KEY-UPDATE.request.

## 15.6.6 GTK solicitation/distribution

The mechanism supports the procedure of soliciting a new GTK from, or distributing a new GTK to, a peer MAC sublayer. The primitives covered in this Clause are listed in Table 74.

Table 74 - GTK solicitation/distribution primitives

| Service Primitive | Request | Indication | Response | Confirm |
|---|---|---|---|---|
| MLME-GTK | 15.6.6.1 | 15.6.6.2 | 15.6.6.3 | 15.6.6.4 |

DRAFT 2009



--`,,```,,,,````-`-`,,`,,`,`,,`---
Copyright International Organization for Standardization
Provided by IHS under license with ISO
No reproduction or networking permitted without license from IHS
Not for Resale

Table 75 lists the parameters that appear in the primitives of this Clause.

Table 75 - GTK request/distribution primitive parameters

| Name | Type | Valid range | Description |
|---|---|---|---|
| SrcEUI | EUI-48 | Any valid unicast EUI-48 | Specifies the EUI-48 of the device soliciting or distributing a new GTK. |
| DestEUI | EUI-48 | Any valid unicast EUI-48 | Specifies the EUI-48 of the device requested to distribute or receive a new GTK. |
| TKID | Integer | A non-zero number as specified in Clause 18 | Identifies the PTK used to distribute the new GTK. |
| MessageNumber | Integer | Any valid positive number as specified in Clause 18 | Specifies the number of the message being conveyed in the GTK solicitation or distribution process. |
| StatusCode | Integer | Any valid value as specified in Clause 18 | Specifies the status of the GTK solicitation or distribution process. |
| GTK | Octet string | 16 octets as specified in Clause 18 | Specifies the new GTK being distributed. |
| GTKID | Integer | A non-zero number as specified in Clause 18 | Specifies the TKID of the new GTK being solicited or distributed. |
| GroupEUI | EUI-48 | Any valid multicast or broadcast EUI-48 | Specifies the multicast group for which the GTK is being solicited or distributed, or specifies the GTK is for broadcast. |
| Global | Boolean | FALSE, TRUE | If TRUE, indicates that the GTK update applies to all broadcast and multicast traffic from the device that distributed this GTK. If FALSE, indicates the update applies only to the specific GroupEUI identified. |
| GTKFailureTimeout | Integer | ≥1 | Specifies a time limit in microseconds after which the procedure of soliciting or distributing a new GTK must be terminated. |
| ResultCode | Enumeration | RESPONSE_RECEIVED, INVALID_PARAMETERS, TIMEOUT | Indicates the result of the corresponding MLME-GTK.request. |

#### 15.6.6.1 MLME-GTK.request

This primitive requests that the MAC sublayer solicit a new GTK from, or distribute a new GTK to, a specified peer MAC sublayer as described in Clause 18.

The definition of this primitive is:

```
MLME-GTK.request(
    DestEUI,
    TKID,
    MessageNumber,
    StatusCode,
    Global,
    GTK,
```



Copyright International Organization for Standardization
Provided by IHS under license with ISO
No reproduction or networking permitted without license from IHS
Not for Resale

```
GTKID,
GroupEUI,
GTKFailureTimeout
)
```

#### 15.6.6.1.1 When generated

This primitive is generated by the DME for the local MAC sublayer to solicit a new GTK from, or distribute a new GTK to, a specified peer MAC sublayer.

#### 15.6.6.1.2 Effect of receipt

The MAC sublayer initiates a new GTK solicitation or distribution procedure, based on the value of MessageNumber. If MessageNumber is zero, the MAC sublayer transmits a GTK command soliciting a new GTK from the specified peer MAC sublayer. If MessageNumber is one, the MAC sublayer distributes a new GTK to the specified peer MAC sublayer. The MLME subsequently issues an MLME-GTK.confirm to reflect the results.

### 15.6.6.2 MLME-GTK.indication

This primitive reports the solicitation or distribution of a new GTK by a specific peer MAC sublayer.

The definition of this primitive is:

```
MLME-GTK.indication(
    SrcEUI,
    TKID,
    MessageNumber,
    StatusCode,
    Global,
    GTK,
    GTKID,
    GroupEUI
    )
```

#### 15.6.6.2.1 When generated

This primitive is generated by the MLME as a result of receiving a valid solicitation or distribution of a new GTK from a specific peer MAC sublayer.

#### 15.6.6.2.2 Effect of receipt

The DME is notified of the solicitation or distribution of a new GTK. If the received MessageNumber is zero, and if the DME accepts the solicitation for a new GTK, it subsequently issues an MLME-GTK.request to distribute a new GTK. If the received MessageNumber is one, the DME subsequently issues an MLME-GTK.response to reflect the actions taken with respect to the distribution of a new GTK.

If the StatusCode in the MLME-GTK.response is zero, the DME follows to issue an MLME-KEY-UPDATE.request.

### 15.6.6.3 MLME-GTK.response

This primitive responds to the solicitation or distribution of a new GTK by a specific peer MAC sublayer.

The definition of this primitive is:

```
MLME-GTK.response(
    SrcEUI
    TKID,
    MessageNumber,
```

DRAFT 2009



Copyright International Organization for Standardization
Provided by IHS under license with ISO
No reproduction or networking permitted without license from IHS
Not for Resale

```
StatusCode,
GTK,
GTKID,
GroupEUI
)
```

#### 15.6.6.3.1 When generated

This primitive is generated by the DME as a result of an MLME-GTK.indication reporting a distribution of a new GTK from a specific peer MAC sublayer.

#### 15.6.6.3.2 Effect of receipt

The MAC sublayer transmits a GTK command responding to the distribution of a new GTK from the specific peer MAC sublayer. The GTK command carries the StatusCode parameter in its Status Code field.

### 15.6.6.4 MLME-GTK.confirm

This primitive reports the results of the attempt to solicit a new GTK from, or distribute a new GTK to, a specified peer MAC sublayer.

The definition of this primitive is:

```
MLME-GTK.confirm(
    DestEUI,
    TKID,
    MessageNumber,
    StatusCode,
    GTK,
    GTKID,
    GroupEUI,
    ResultCode,
    )
```

#### 15.6.6.4.1 When generated

This primitive is generated by the MLME as a result of an MLME-GTK.request to solicit a new GTK from, or distribute a new GTK to, a specified peer MAC sublayer. Specifically, the primitive is generated by the MLME upon successfully transmitting a GTK command soliciting a new GTK or upon successfully receiving a GTK command responding to the distribution of a new GTK; the primitive is also generated in case of INVALID_PARAMETERS or GTKFailureTimeout.

#### 15.6.6.4.2 Effect of receipt

The DME is notified of the results of the procedure to solicit a new GTK from, or distribute a new GTK to, a specified peer MAC sublayer.

## 15.6.7 Temporal key update

The mechanism supports the procedure of installing or deleting either a PTK or a GTK. The primitives covered in this Clause are listed in Table 76.

Table 76 - Temporal key update primitives

| Service Primitive | Request | Indication | Response | Confirm |
|---|---|---|---|---|
| MLME-KEY-UPDATE | 15.6.7.1 | | | 15.6.7.2 |

DRAFT 2009



Copyright International Organization for Standardization
Provided by IHS under license with ISO
No reproduction or networking permitted without license from IHS
Not for Resale

Table 77 lists the parameters that appear in the primitives of this Clause.

Table 77 - Temporal Key update primitive parameters

| Name | Type | Valid range | Description |
|---|---|---|---|
| PeerEUI | EUI-48 | Any valid unicast EUI-48 | For a PTK, specifies the EUI-48 of the peer device sharing the PTK being updated. For a GTK, specifies the EUI-48 of the device which distributed the GTK being updated. |
| GroupEUI | EUI-48 | Any valid multicast or broadcast EUI-48 | Specifies the multicast or broadcast EUI-48 to which the new GTK applies. |
| KeyType | Enumeration | PTK, GTK | Indicates whether the update is for a PTK or GTK. |
| Global | Boolean | FALSE, TRUE | If TRUE, indicates that the GTK update applies to all broadcast and multicast traffic from the device that distributed this GTK. If FALSE, indicates the update applies only to the specific GroupEUI identified. |
| TKID_Old | Integer | A non-zero number as specified in Clause 18, or 0 | Specifies the TKID of the old PTK or GTK being replaced. If zero, indicates no old PTK or GTK is being replaced. |
| TKID | Integer | A non-zero number as specified in Clause 18, or 0 | Specifies the TKID of the new PTK or GTK being installed. If zero, indicates no new PTK or GTK is being installed. |
| KEY | Octet string | 16 octets as specified in Clause 18 | Specifies the new PTK or GTK being installed. |
| ResultCode | Enumeration | SUCCESS, INVALID_PARAMETERS | Indicates the result of the corresponding MLME-KEY-UPDATE.request. |

#### 15.6.7.1 MLME-KEY-UPDATE.request

This primitive requests an update of a specified PTK or GTK.

The definition of this primitive is:

```
MLME-KEY-UPDATE.request(
    PeerEUI,
    GroupEUI,
    KeyType,
    Global,
    TKID_Old,
    TKID,
    KEY
    )
```

##### 15.6.7.1.1 When generated

This primitive is generated by the DME for the local MAC sublayer to update a PTK or GTK.

##### 15.6.7.1.2 Effect of receipt

The MLME removes the keying credential identified by TKID_Old that was previously installed if TKID_Old is not zero. The MLME then installs the new PTK or GTK along



Copyright International Organization for Standardization
Provided by IHS under license with ISO
No reproduction or networking permitted without license from IHS
Not for Resale

with the TKID for the specified (PeerEUI, GroupEUI) if TKID is not zero. The MLME subsequently issues an MLME-KEY-UPDATE.confirm to reflect the results.

#### 15.6.7.2 MLME-KEY-UPDATE.confirm

This primitive reports the results of the attempt to update a PTK or GTK.

The definition of this primitive is:

```
MLME-KEY-UPDATE.confirm(
    PeerEUI,
    GroupEUI,
    TKID_Old,
    TKID,
    KEY,
    ResultCode
    )
```

##### 15.6.7.2.1 When generated

This primitive is generated by the MLME as a result of an MLME-KEY-UPDATE.request to update a PTK or GTK.

##### 15.6.7.2.2 Effect of receipt

The DME is notified of the results of the procedure to update a specified PTK or GTK.

### 15.6.8 Security violation report

The mechanism supports the procedure of reporting a security violation. The primitives covered in this Clause are listed in Table 78.

Table 78 - Security violation report primitives

| Service Primitive | Request | Indication | Response | Confirm |
|---|---|---|---|---|
| MLME-SECURITY-VIOLATION | | 15.6.8.1 | | |

Table 79 lists the parameters that appear in the primitives of this Clause.

Table 79 - Security violation report primitive parameters

| Name | Type | Valid range | Description |
|---|---|---|---|
| ViolationCode | Enumeration | INVALID_MODE, INVALID_MIC, INVALID_TKID, REPLAYED_FRAME | Indicates the cause of a security violation. |

#### 15.6.8.1 MLME-SECURITY-VIOLATION.indication

This primitive reports a security violation.

The definition of this primitive is:

```
MLME-SECURITY-VIOLATION.indication(
    ViolationCode
    )
```

##### 15.6.8.1.1 When generated

This primitive is generated by the MLME as a result of encountering a security violation.

DRAFT 2009



Copyright International Organization for Standardization
Provided by IHS under license with ISO
No reproduction or networking permitted without license from IHS
Not for Resale

#### 15.6.8.1.2 Effect of receipt

The DME is notified of the cause of the security violation.

### 15.6.9 Pseudo-random function (PRF)

This mechanism provides higher layers through the DME with access to the MAC PRF. For simplicity, this primitive only provides 256-bit random numbers. Smaller quantities may be extracted from the result without compromising the randomness of the result. The primitives covered in this Clause are listed in Table 80.

Table 80 - PRF primitives

| Service Primitive | Request | Indication | Response | Confirm |
|---|---|---|---|---|
| MLME-PRF | 15.6.9.1 | | | 15.6.9.2 |

Table 81 lists the parameters that appear in the primitives of this Clause.

Table 81 - PRF primitive parameters

| Name | Type | Valid range | Description |
|---|---|---|---|
| Key | Octet string | A 16-octet symmetric key as specified in Clause 18 | The key to be used for generating a random number |
| Nonce | Octet string | 13 octets as specified in Clause 18 | The nonce to be used for generating a random number |
| DataBlocks | Octet string | 0 - 65 535 octets | Arbitrary data to be used as input to the MAC PRF |
| DataLength | Integer | 0 - 65 535 | Length in octets of DataBlocks |
| RandomNumber | Octet string | 32 octets | The generated 256-bit random number |
| ResultCode | Enumeration | SUCCESS, INVALID_PARAMETERS | The result of the MLME-PRF.request |

#### 15.6.9.1 MLME-PRF.request

This primitive requests generation of a 256-bit pseudo-random number using the MAC PRF.

The definition of this primitive is:

```
MLME-PRF.request(
    Key,
    Nonce,
    DataBlocks,
    DataLength
    )
```

#### 15.6.9.1.1 When generated

This primitive is generated by the DME to request that the MAC sublayer generate a random number using the MAC PRF facility.

DRAFT



Copyright International Organization for Standardization
Provided by IHS under license with ISO
No reproduction or networking permitted without license from IHS
Not for Resale

#### 15.6.9.1.2 Effect of receipt

The local MAC sublayer calls the PRF defined in Clause 18 with the parameters contained in the primitive to generate a 256-bit random number. The semantics of the call to the PRF are:

```
PRF-256(Key, Nonce, "MLME_PRFrequest", DataBlocks, DataLength)
```

### 15.6.9.2 MLME-PRF.confirm

This primitive returns the result of the previously initiated MLME-PRF.request.

The definition of this primitive is:

```
MLME-PRF.confirm(
    RandomNumber,
    ResultCode
    )
```

#### 15.6.9.2.1 When generated

This primitive is generated by the MLME as a result of an MLME-PRF.request to generate a 256-bit random number using the MAC PRF.

#### 15.6.9.2.2 Effect of receipt

The DME is notified of the results of the procedure of generating a 256-bit random number using the MAC PRF facility.

## 15.6.10 Application-specific IE (ASIE) management

The service primitives in this Clause allow the DME to add or remove an ASIE from the beacon content. The primitives covered in this Clause are listed in Table 82.

Table 82- ASIE management primitives

| Service Primitive | Request | Indication | Response | Confirm |
|---|---|---|---|---|
| MLME-ASIE-ADD | 15.6.10.1 | | | 15.6.10.2 |
| MLME-ASIE-REMOVE | 15.6.10.3 | | | 15.6.10.4 |
| MLME-ASIE | | 15.6.10.5 | | |

Table 83 lists the parameters that appear in the primitives of this Clause.

Table 83 - ASIE management primitive parameters

| Name | Type | Valid range | Description |
|---|---|---|---|
| ASIEData | Array | Variable | A variable size array containing ASIE data |
| ASIEHandle | Integer | 0 - 255 | A handle associated with an ASIE that has been added to the beacon content |
| PositionAdvice | Integer | 0 - 255 | The recommended position of the ASIE in the beacon |
| ResultCode | Enumeration | SUCCESS, FAILURE | Indicates the result of the MLME-ASIE-ADD or MLME-ASIE-REMOVE requests |

### 15.6.10.1 MLME-ASIE-ADD.request

This primitive changes the beacon content by adding an ASIE.



Copyright International Organization for Standardization
Provided by IHS under license with ISO
No reproduction or networking permitted without license from IHS
Not for Resale

The definition of this primitive is:

```
MLME-ASIE-ADD.request(
    ASIEHandle,
    ASIEData,
    PositionAdvice
    )
```

ASIEData is the data to be added to the beacon as an ASIE. PositionAdvice indicates the position where the new ASIE is added to the beacon. The ASIE is added after any IEs with Element ID less than or equal to PositionAdvice, and before any IEs with Element ID greater than PositionAdvice.

#### 15.6.10.1.1 When generated

This primitive is generated by the DME to instruct the MAC sublayer to add an ASIE to the beacon contents.

#### 15.6.10.1.2 Effect of receipt

When the MLME receives the request it initiates adding the ASIE to the beacon contents.

### 15.6.10.2 MLME-ASIE-ADD.confirm

This primitive confirms the result of an operation to add an ASIE to the beacon in response to an MLME-ASIE-ADD request.

The definition of this primitive is:

```
MLME-ASIE-ADD.confirm(
    ASIEHandle,
    ResultCode
    )
```

ResultCode indicates the result of the attempt to add an ASIE to the beacon. If an operation to add an ASIE to the beacon is not succeeding, it is a vendor specific decision when to time out the operation and return FAILURE. If the ASIE has been successfully added to the beacon contents, ASIEHandle is returned with a handle to the ASIE. This handle can be used with the MLME-ASIE-REMOVE request to remove the ASIE from the beacon content.

#### 15.6.10.2.1 When generated

This primitive is generated by the MLME as a result of an MLME-ASIE-ADD.request with a successful return status to indicate that the first beacon has been successfully transmitted with the ASIE. If MLME-ASIE-ADD.request was called when beacons were not being transmitted, a successful status indicates that the ASIE will be in the beacon when the next beacon is sent. If the ASIE cannot be added to the beacon content the primitive is generated with a FAILURE status.

#### 15.6.10.2.2 Effect of receipt

The recipient is notified of the results of the procedure of adding an ASIE to the beacon content.

### 15.6.10.3 MLME-ASIE-REMOVE.request

This primitive instructs the MAC sublayer to remove an ASIE from the beacon content.

The definition of this primitive is:

DRAFT 2009



Copyright International Organization for Standardization
Provided by IHS under license with ISO
No reproduction or networking permitted without license from IHS
Not for Resale

```
MLME-ASIE-REMOVE.request(
    ASIEHandle
    )
```

ASIEHandle is the handle of an ASIE that was successfully added to the beacon.

#### 15.6.10.3.1 When generated

This primitive is generated by the DME to remove an ASIE from the beacon.

#### 15.6.10.3.2 Effect of receipt

The MAC sublayer immediately initiates removing the ASIE indicated by ASIEHandle from the beacon content.

### 15.6.10.4 MLME-ASIE-REMOVE.confirm

This primitive confirms that the attempt to remove an ASIE from the beacon in response to an MLME-ASIE-REMOVE request has completed.

The definition of this primitive is:

```
MLME-ASIE-REMOVE.confirm(
    ASIEHandle,
    ResultCode
    )
```

ResultCode indicates the status of the operation to remove an ASIE from the beacon content.

#### 15.6.10.4.1 When generated

This primitive is generated by the MLME as a result of an MLME-ASIE-REMOVE.request. If beacons are being transmitted a beacon must have been sent without the ASIE for a successful confirmation. If beacons are not being transmitted a successful confirmation indicates that the next beacon sent will not include the ASIE.

#### 15.6.10.4.2 Effect of receipt

The recipient is notified of the results of the procedure of removing an ASIE from the beacon.

### 15.6.10.5 MLME-ASIE.indication

This primitive indicates the reception of an ASIE from a neighbour.

The definition of this primitive is:

```
MLME-ASIE.indication(
    ASIEData
    )
```

#### 15.6.10.5.1 When generated

This primitive is generated by the MLME when a beacon is received that contains an ASIE.

#### 15.6.10.5.2 Effect of receipt

The recipient is notified of reception of an ASIE.

DRAFT 2009



Copyright International Organization for Standardization
Provided by IHS under license with ISO
No reproduction or networking permitted without license from IHS
Not for Resale

### 15.6.11 Multicast address binding

The mechanism supports binding of multicast EUI-48s to McstAddrs for transmission and activating or deactivating specific multicast EUI-48s for reception. The primitives covered in this Clause are listed in Table 84.

Table 84 - Multicast Address Binding primitives

| ServicePrimitive | Request | Indication | Response | Confirm |
|---|---|---|---|---|
| MLME-MULTICAST-REGISTER | 15.6.11.1 | | | 15.6.11.2 |
| MLME-MULTICAST-DEREGISTER | 15.6.11.3 | | | 15.6.11.4 |
| MLME-MULTICAST-ACTIVATE | 15.6.11.5 | | | 15.6.11.6 |
| MLME-MULTICAST-DEACTIVATE | 15.6.11.7 | | | 15.6.11.8 |

Table 85 lists the parameters that appear in the primitives of this Clause.

Table 85 - Multicast Address Binding primitive parameters

| Name | Type | Valid range | Description |
|---|---|---|---|
| DestEUI | EUI-48 | Any valid multicast EUI-48 | Specifies the multicast group address to which the primitive applies |
| ResultCode | Enumeration | SUCCESS, FAILURE | Indicates the result of a multicast address binding request |

#### 15.6.11.1 MLME-MULTICAST-REGISTER.request

This primitive binds the multicast EUI-48 DestEUI to a McstAddr.

The definition of this primitive is:

```
MLME-MULTICAST-REGISTER.request(
    DestEUI
    )
```

##### 15.6.11.1.1 When generated

This primitive is generated by the DME for the device to bind the multicast EUI-48 specified by the parameters of the primitive to a McstAddr selected by the MAC sublayer. Multicast EUI-48s must be registered before being used in any MAC-DATA.request at the MAC SAP.

##### 15.6.11.1.2 Effect of receipt

The MAC sublayer generates a binding between DestEUI and a McstAddr and declares the binding in a Multicast Binding IE.

The MAC sublayer will use the bound McstAddr as the DestAddr for MSDUs passed to it via the MAC-DATA.request primitive with corresponding DestEUI. The MAC sublayer subsequently issues an MLME-MULTICAST-REGISTER.confirm to reflect the results.

DRAFT 2009



Copyright International Organization for Standardization
Provided by IHS under license with ISO
No reproduction or networking permitted without license from IHS
Not for Resale

#### 15.6.11.2 MLME-MULTICAST-REGISTER.confirm

This primitive reports the result of a specified multicast address registration request.

The definition of this primitive is:

```
MLME-MULTICAST-REGISTER.confirm(
    ResultCode
    )
```

##### 15.6.11.2.1 When generated

This primitive is generated by the MAC sublayer as a result of an MLME-MULTICAST-REGISTER.request to bind the multicast EUI-48 specified in that request to a McstAddr.

##### 15.6.11.2.2 Effect of receipt

The DME is notified of the results of the multicast address binding.

#### 15.6.11.3 MLME-MULTICAST-DEREGISTER.request

This primitive invalidates the binding between the multicast EUI-48 DestEUI and a McstAddr.

The definition of this primitive is:

```
MLME-MULTICAST-DEREGISTER.request(
    DestEUI
    )
```

##### 15.6.11.3.1 When generated

This primitive is generated by the DME for the device to release the binding of the multicast EUI-48 specified by the parameters of the primitive to a McstAddr.

##### 15.6.11.3.2 Effect of receipt

The MAC sublayer invalidates its binding between DestEUI and a McstAddr.

The MAC sublayer subsequently issues an MLME-MULTICAST-DEREGISTER.confirm to reflect the results.

#### 15.6.11.4 MLME-MULTICAST-DEREGISTER.confirm

This primitive reports the result of a specified multicast address de-registration request.

The definition of this primitive is:

```
MLME-MULTICAST-DEREGISTER.confirm(
    ResultCode
    )
```

##### 15.6.11.4.1 When generated

This primitive is generated by the MAC sublayer as a result of an MLME-MULTICAST-DEREGISTER.request to release any binding between the multicast EUI-48 specified in that request and a McstAddr.

##### 15.6.11.4.2 Effect of receipt

The DME is notified of the results of the multicast address de-registration request.

#### 15.6.11.5 MLME-MULTICAST-ACTIVATE.request

This primitive activates the multicast EUI-48 for reception of multicast traffic.

The definition of this primitive is:

DRAFT 2009



Copyright International Organization for Standardization
Provided by IHS under license with ISO
No reproduction or networking permitted without license from IHS
Not for Resale

```
MLME-MULTICAST-ACTIVATE.request(
    DestEUI
    )
```

#### 15.6.11.5.1 When generated

This primitive is generated by the DME for the device to activate reception of traffic on the multicast EUI-48 specified by the parameters of the primitive. A multicast address must be activated before the MAC sublayer will deliver any MSDUs with the multicast DestEUI to the MAC client via the MAC-DATA.indication at the MAC SAP.

#### 15.6.11.5.2 Effect of receipt

The MAC sublayer modifies its receive multicast filters to receive traffic addressed to a McstAddr that the source of the traffic has announced is bound to the multicast EUI-48 specified by the primitive.

The MAC sublayer subsequently issues an MLME-MULTICAST-ACTIVATE.confirm to reflect the results.

### 15.6.11.6 MLME-MULTICAST-ACTIVATE.confirm

This primitive reports the result of a multicast traffic activation request.

The definition of this primitive is:

```
MLME-MULTICAST-ACTIVATE.confirm(
    ResultCode
    )
```

#### 15.6.11.6.1 When generated

This primitive is generated by the MAC sublayer as a result of an MLME-MULTICAST-ACTIVATE.request to activate the multicast EUI-48 specified in that request.

#### 15.6.11.6.2 Effect of receipt

The DME is notified of the results of the procedure of activating the specified multicast EUI-48.

### 15.6.11.7 MLME-MULTICAST-DEACTIVATE.request

This primitive deactivates the multicast EUI-48 for reception of multicast traffic. If the multicast EUI-48 is the NULL address (FF FF FF FF FF FF) all multicast EUI-48s are deactivated.

The definition of this primitive is:

```
MLME-MULTICAST-DEACTIVATE.request(
    DestEUI
    )
```

#### 15.6.11.7.1 When generated

This primitive is generated by the DME for the device to deactivate reception of traffic on the multicast EUI-48 specified by the parameters of the primitive.

#### 15.6.11.7.2 Effect of receipt

The MAC sublayer modifies its multicast receive filters to discard MSDUs received with DestAddr set to a McstAddr that the source of the MSDU has announced is bound to the multicast EUI-48 specified by the primitive.

DRAFT 2009



Copyright International Organization for Standardization
Provided by IHS under license with ISO
No reproduction or networking permitted without license from IHS
Not for Resale

The MAC sublayer subsequently issues an MLME-MULTICAST-DEACTIVATE.confirm to reflect the results.

#### 15.6.11.8 MLME-MULTICAST-DEACTIVATE.confirm

This primitive reports the result of a multicast traffic deactivation request.

The definition of this primitive is:

```
MLME-MULTICAST-DEACTIVATE.confirm(
    ResultCode
    )
```

##### 15.6.11.8.1 When generated

This primitive is generated by the MAC sublayer as a result of an MLME-MULTICAST-DEACTIVATE.request to deactivate the multicast traffic specified in that request.

##### 15.6.11.8.2 Effect of receipt

The DME is notified of the results of the procedure of deactivating the specified multicast traffic.

### 15.6.12 Link events

The service primitives in this Clause are provided for the DME to monitor events related to the link status. The primitives covered in this Clause are listed in Table 86.

Table 86 - Link event primitives

| Service Primitive | Request | Indication | Response | Confirm |
|---|---|---|---|---|
| MLME-LINK-EVENT | 15.6.12.1 | 15.6.12.2 | | 15.6.12.3 |

DRAFT 2009



Copyright International Organization for Standardization
Provided by IHS under license with ISO
No reproduction or networking permitted without license from IHS
Not for Resale

Table 87 lists the parameters that appear in the primitives of this Clause.

Table 87 - Link event primitive parameters

| Name | Type | Valid range | Description |
|---|---|---|---|
| AccessMethod | Enumeration | PCA, DRP | The access method used for transmission or receipt of a frame |
| Beacon | Enumeration | FALSE, TRUE | Indicates whether a received frame was a beacon |
| BPSTOffset | Integer | 0 - 65 535 | The offset of the start of a received frame relative to the BPST of the device, measured in microseconds |
| RemoteEUI | EUI-48 | Any valid unicast EUI-48 | Specifies the EUI-48 of the remote device in the link |
| LinkEveneType | Enumeration | RECEIVE_SUCCESS, RECEIVE_ERROR, TRANSMIT_SUCCESS, TRANSMIT_ERROR | The type of link event that occurred on a link being monitored |
| MonitorState | Enumeration | DISABLED, ENABLED | Specifies whether link event observation is active for the specified link |
| PayloadSize | Integer | 0 to pMaxPayloadSize | Size of a transmitted or received frame payload |
| PHYRate | Enumeration | RATE_53_3, RATE_80, RATE_106_7, RATE_160, RATE_200, RATE_320, RATE_400, RATE_480 | PHY data rate at which a frame was transmitted or received |
| ResultCode | Enumeration | SUCCESS, FAILURE | Appears in MLME-LINK-EVENT.confirm and indicates the result of the corresponding MLME-LINK-EVENT request |
| RetryCount | Integer | Variable | Retry count for this transmission |
| ReceiveErrorInfo | Enumeration | PAYLOAD_ERROR, UNSUPPORTED_RATE_ERROR, GENERAL_ERROR | Provides additional information for an RECEIVE_ERROR |
| DeliveriID | integer | As defined in 16.2.1.5 | The Delivery ID associated with a transmitted or received frame |

#### 15.6.12.1 MLME-LINK-EVENT.request

This primitive enables or disables the observation of link events for a specified link.

The definition of this primitive is:

```
MLME-LINK-EVENT.request(
RemoteEUI,
MonitorState
)
```



Copyright International Organization for Standardization
Provided by IHS under license with ISO
No reproduction or networking permitted without license from IHS
Not for Resale

RemoteEUI is the EUI-48 for the remote device for which the link monitoring state is to be changed. MonitorState indicates whether monitoring link events is to be enabled or disabled for the specified link. Links are not monitored by default.

#### 15.6.12.1.1 When generated

This primitive is generated by the DME to enable or disable link monitoring for the specified link.

#### 15.6.12.1.2 Effect of receipt

The MLME initiates enabling or disabling observation of link events for the specified link.

### 15.6.12.2 MLME-LINK-EVENT.indication

This indication informs the DME that an event occurred for a link with monitoring enabled.

The definition of this primitive is:

```
MLME-LINK-EVENT.indication(

    AccessMethod,
    Beacon,
    BPSTOffset,
    LinkEventType,
    PayloadSize,
    PHYRate,
    RemoteEUI,
    RetryCount,
    ReceiveErrorInfo,
    DeliveryID
    )
```

AccessMethod indicates if the frame associated with this event occurred during a DRP reservation or during PCA access time. Beacon indicates whether the event is associated with the receipt of a beacon. AccessMethod is undefined if Beacon is TRUE. RemoteEUI is the EUI-48 of the remote device associated with the link event. LinkEventType indicates the type of event that has occurred for the link that is being

DRAFT 2009



Copyright International Organization for Standardization
Provided by IHS under license with ISO
No reproduction or networking permitted without license from IHS
Not for Resale

monitored. The possible link event types and their meaning for frames that are received in different ways are summarized and described in Table 88.

Table 88 - Link event types

| | Beacon | DRP/PCA No-ACK | DRP/PCA IMM-ACK, B-ACK |
|---|---|---|---|
| RECEIVE_SUCCESS | Beacon from RemoteEUI received correctly | Frame received correctly from RemoteEUI | Frame received correctly from RemoteEUI |
| RECEIVE_ERROR | Beacon from RemoteEUI received with RECEIVE_ERROR | Frame received from RemoteEUI with RECEIVE_ERROR | Frame received from RemoteEUI with RECEIVE_ERROR |
| TRANSMIT_SUCCESS | N/A | Frame transmitted to RemoteEUI | Frame transmitted to RemoteEUI and acknowledgement received |
| TRANSMIT_ERROR | N/A | N/A | Frame transmitted to RemoteEUI and no acknowledgement received |

PayloadSize is the size of the frame associated with the link event (not including the FCS). PHYRate is the rate at which the frame associated with the link event was transmitted or received. ReceiveErrorInfo provides additional information if the even type is an RECEIVE_ERROR - it is undefined for other event types. RetryCount is number of times the transmission was attempted. DeliveryID is the Delivery ID associated with the frame that produced the link event if the event occurred during a reservation.

#### 15.6.12.2.1 When generated

This indication is generated by the MLME when it determines a link event has occurred for a link that is being monitored.

#### 15.6.12.2.2 Effect of receipt

The recipient is notified that an event has occurred for a link that is being monitored.

### 15.6.12.3 MLME-LINK-EVENT.confirm

This confirmation indicates that a request to enable or disable link monitoring initiated by the MLME-LINK-EVENT request has been completed.

The definition of this primitive is:

```
MLME-LINK-EVENT.confirm(
    ResultCode
    )
```

ResultCode indicates whether the operation to change whether a link is monitored has successfully completed. If changing the state is not succeeding, it is a vendor specific decision when to time out the operation and return FAILURE.

#### 15.6.12.3.1 When generated

This primitive is generated by the MLME as a result of an MLME-LINK-EVENT.request once the requested state has been entered or the operation has failed.



Copyright International Organization for Standardization
Provided by IHS under license with ISO
No reproduction or networking permitted without license from IHS
Not for Resale

#### 15.6.12.3.2 Effect of receipt

The recipient is notified of the results of the procedure of changing whether events are monitored for the specified link.

### 15.6.13 Probe

The service primitives in this Clause are provided for the DME to request Information Elements from another device. The primitives covered in this Clause are listed in Table 89.

Table 89 - Probe primitives

| Service Primitive | Request | Indication | Response | Confirm |
|---|---|---|---|---|
| MLME-PROBE | 15.6.13.1 | 15.6.13.2 | 15.6.13.3 | 15.6.13.4 |

Table 90 lists the parameters that appear in the primitives of this Clause.

Table 90 - Probe primitive parameters

| Name | Type | Valid range | Description |
|---|---|---|---|
| Explicit | Boolean | FALSE, TRUE | Controls whether a probe request is implicit or explicit |
| DestEUI | EUI-48 | Any valid EUI-48 | Specifies the EUI-48 of the target of the probe request |
| IEElementID | Integer | 0 - 255 | The element ID of an IE being requested |
| SpecifierID | Integer | 0 - 65 535 | The “Specifier ID” described in Annex C |
| ASIERequestInformation | Array | Variable | Specifies the contents of the Application-specific Request Information field to include in the Application-specific Probe IE |
| IEInfo | Array | Variable | A variable size array containing all the data for an IE sent or received via the probe mechanism |
| ResultCode | Enumeration | SUCCESS, TIMEOUT | Indicates the result of the corresponding request |
| SrcEUI | EUI-48 | Any valid unicast EUI-48 | Specifies the EUI-48 of the source of a received probe request |
| RequestTimeout | Duration | 0 - 65 535 | The time, in milliseconds, allotted for the completion of an MLME request. If this time elapses while the request is pending, it is terminated with a ResultCode of TIMEOUT |

#### 15.6.13.1 MLME-PROBE.request

This primitive begins a request to another device for an IE.

The definition of this primitive is:

```
MLME-PROBE.request(
    Explicit,
    DestEUI,
    IEElementID,
    SpecifierID,
```

DRAFT



Copyright International Organization for Standardization
Provided by IHS under license with ISO
No reproduction or networking permitted without license from IHS
Not for Resale

```
RequestTimeout
)
```

Explicit indicates whether the probe request is to be performed through beacons or using command frames. Explicit probe requests are performed using command frames, while implicit probe requests are made through beacons. DestEUI is the device ID of the target device for the probe request. The IEElementID is the element ID for the Information Element that is being requested through the probe request. If IEElementID specifies an ASIE, then SpecifierID and ASIERequestInformation must be provided. SpecifierID identifies the organizational definer of the ASIE, and ASIERequestInformation specifies the organization-specific information to include in the request. RequestTimeout is the maximum time a device should wait to complete the probe request, and should account for request and response delays up to mMaxLostBeacons superframes if the request is implicit.

The definition of the request primitive to request a single IE does not prohibit an implementation from requesting multiple IEs in a single request.

#### 15.6.13.1.1 When generated

This primitive is generated by the DME to initiate a probe request. A probe request is only sent to a device that indicates it supports probe requests in its Capabilities IE.

#### 15.6.13.1.2 Effect of receipt

The MLME initiates the probe request through the specified mechanism. If implicit, the request must be attempted in the next beacon transmitted. If the mechanism is explicit, the MAC sublayer issues the probe request using command frames, using an immediate acknowledgement policy.

### 15.6.13.2 MLME-PROBE.indication

This indication informs the DME that a probe request was received from another device.

The definition of this primitive is:

```
MLME-PROBE.indication(
    IEElementID,
    SpecifierID
    Explicit
    SrcEUI
    )
```

SrcEUI is the device ID of the device that sent the probe request. The IEElementID is the element ID for the Information Element that is being requested through the probe request.

#### 15.6.13.2.1 When generated

This indication is generated by the MLME when it receives a probe request.

#### 15.6.13.2.2 Effect of receipt

The recipient is notified that a probe request was received.

### 15.6.13.3 MLME-PROBE.response

In response to a probe request, this primitive causes the requested Information Element to be transmitted to the requestor.

The definition of this primitive is:

```
MLME-PROBE.response(
    Explicit,
    DestEUI,
```



Copyright International Organization for Standardization
Provided by IHS under license with ISO
No reproduction or networking permitted without license from IHS
Not for Resale

```
IEInfo,
TransmissionTimeout
)
```

Explicit indicates whether the probe request is to be performed through beacons or using command frames. The use of Explicit must be set to the same value as what was delivered in the corresponding probe request. DestEUI is the device ID of the target device for the probe request. The IEInfo array contains the full IE to be transmitted. Transmission timeout is the timeout for the probe response if explicit access is used. Transmission timeout is not used if the request is implicit.

#### 15.6.13.3.1 When generated

This primitive is generated by the DME in response to receipt of a Probe Request IE, whether received in the beacon or signalled by MLME-PROBE.indication.

#### 15.6.13.3.2 Effect of receipt

The MLME initiates the probe response through the specified mechanism. If mechanism is through the beacon, the response is attempted in the next beacon transmitted. If the mechanism is explicit, the MLME issues the probe response using an immediate acknowledgement policy.

### 15.6.13.4 MLME-PROBE.confirm

This indication informs the DME that a probe response was received from another device.

The definition of this primitive is:

```
MLME-PROBE.confirm(
    IEInfo,
    SrcEUI,
    ResultCode
    )
```

SrcEUI is the device ID of the device that sent the probe response. The IEInfo is the information element data provided in the probe response. ResultCode indicates SUCCESS if the confirmation is received within the RequestTimeout period, or TIMEOUT if RequestTimeout expired before receiving the confirmation.

#### 15.6.13.4.1 When generated

This indication is generated by the MLME when it receives a probe response through PCA traffic. A probe response through a beacon is received by the DME through a MLME-BEACON indication.

#### 15.6.13.4.2 Effect of receipt

The recipient is notified that a probe response was received.

DRAFT ZOG



Copyright International Organization for Standardization
Provided by IHS under license with ISO
No reproduction or networking permitted without license from IHS
Not for Resale

### 15.6.14 Hibernation and sleep cycle

The service primitives in this Clause are provided for the DME to control hibernation, hibernation anchor support, and sleep cycles during a superframe. The primitives covered in this Clause are listed in Table 91.

Table 91 - Hibernation primitives

| Service Primitive | Request | Indication | Response | Confirm |
|---|---|---|---|---|
| MLME-HIBERNATE | 15.6.14.1 | | | 15.6.14.2 |
| MLME-WAKE | 15.6.14.3 | 15.6.14.4 | | 15.6.14.5 |
| MLME-HIBERNATION-ANCHOR | 15.6.14.6 | 15.6.14.7 | | 15.6.14.8 |
| MLME-SLEEP-SCHEDULE | 15.6.14.9 | | | 15.6.14.10 |

DRAFT 2009



Copyright International Organization for Standardization
Provided by IHS under license with ISO
No reproduction or networking permitted without license from IHS
Not for Resale

Table 92 lists the parameters that appear in the primitives of this Clause.

Table 92 - Hibernation primitive parameters

| Name | Type | Valid range | Description |
|---|---|---|---|
| Start | Integer | 0 - N | The number of superframes before the device will enter hibernation mode. N is implementation-specific |
| InitialCountdown | Integer | 1 - 255 | The number of superframes a device will indicate its intent to hibernate before hibernation begins |
| HibernationDuration | Integer | 1 - 255 | The number of superframes the device intends to hibernate |
| Repetitive | Boolean | FALSE, TRUE | TRUE if the device will enter hibernate mode periodically based on the HibernationDuration and WakeDuration parameters |
| WakeDuration | Integer | 1 - N | The number of superframes that a device will be in active mode after leaving hibernation mode, if Repetitive is used. N is implementation-specific |
| AnchorOperation | Enumeration | ACTIVATE, DEACTIVATE | Specifies whether device will start or stop operating as a hibernation anchor |
| OnInNeighborHardReservations | Boolean | FALSE, TRUE | Indicates if a device in ON_PER_LOAD sleep mode should be on during neighbours' hard reservations |
| OnInNeighborSoftReservations | Boolean | FALSE, TRUE | Indicates if a device in ON_PER_LOAD sleep mode should be on during neighbours' soft reservations |
| OnForPCA | Boolean | FALSE, TRUE | Indicates if a device in ON_PER_LOAD sleep mode should be on during MASs available for PCA |
| PCAMASCount | Integer | 0 - 255 | Indicates the maximum number of MASs per superframe that the device should be on for PCA |
| ResultCode | Enumeration | SUCCESS, FAILURE, FAILURE_NO_SLOTS | Indicates the result of the corresponding MLME-HIBERNATE or MLME-WAKE request |
| SleepMode | Enumeration | ALWAYS_ON, ON_PER_SCHEDULE, ON_PER_LOAD | Indicates the type of sleep operation a device should perform |
| SleepSchedule | Bitmap | one bit per MAS | Each bit indicates if the device should sleep or receive traffic during the corresponding MAS |

DRAFT



Copyright International Organization for Standardization
Provided by IHS under license with ISO
No reproduction or networking permitted without license from IHS
Not for Resale

#### 15.6.14.1 MLME-HIBERNATE.request

This primitive instructs the MAC sublayer to begin the hibernation process. During hibernation the MAC sublayer ceases all operations on the medium including transmission of beacons.

The definition of this primitive is:

```
MLME-HIBERNATE.request(
    Start,
    InitialCountdown,
    HibernationDuration
    Repetitive,
    WakeDuration
    )
```

Before hibernation begins the MAC sublayer adds the Hibernation Mode IE to its beacon. InitialCountdown indicates how many superframes the Hibernation Mode IE will be included in the beacon before hibernation begins. HibernationDuration indicates the number of superframes the hibernation is intended to last. HibernationDuration is used in the Hibernation Mode IE which includes the number of superframes the device intends to hibernate.

##### 15.6.14.1.1 When generated

This primitive is generated by the DME to instruct the MAC sublayer to begin the hibernation process. This request may be made at any time after the MLME-WAKE.indication is received if another hibernation request was previously active.

##### 15.6.14.1.2 Effect of receipt

When the MLME receives the request it initiates the hibernation process.

#### 15.6.14.2 MLME-HIBERNATE.confirm

This primitive confirms the result of the hibernation operation started by the MLME-HIBERNATE.request.

The definition of this primitive is:

```
MLME-HIBERNATE.confirm(
    ResultCode
    )
```

ResultCode indicates the result of the attempt to begin the hibernation process. If an operation to start the hibernation process is not succeeding, it is a vendor specific decision when to time out the operation and return FAILURE. A return code of SUCCESS indicates that a beacon has been sent containing the Hibernation Mode IE.

##### 15.6.14.2.1 When generated

This primitive is generated by the MLME as a result of an MLME-HIBERNATE.request to indicate that the first beacon has been transmitted with the Hibernation Mode IE or that the operation has failed.

##### 15.6.14.2.2 Effect of receipt

The recipient is notified of the results of the procedure of starting the hibernation process.

#### 15.6.14.3 MLME-WAKE.request

This primitive instructs the MAC sublayer to immediately exit hibernation mode and resume transmission of beacons as soon as possible, regardless of a previously-scheduled hibernation period length. This primitive also cancels any previous

DRAFT 2009



Copyright International Organization for Standardization
Provided by IHS under license with ISO
No reproduction or networking permitted without license from IHS
Not for Resale

hibernation mode request and instructs the MAC sublayer to remain in active mode until further notice.

The definition of this primitive is:

```
MLME-WAKE.request(
    )
```

#### 15.6.14.3.1 When generated

This primitive is generated by the DME to end the hibernation process and resume transmission of beacons.

#### 15.6.14.3.2 Effect of receipt

The MAC sublayer immediately ends hibernation and resumes transmission of beacons. If this primitive is used before the MAC sublayer has begun hibernation (while it is still transmitting beacons with the Hibernation Mode IE) the MAC sublayer attempts to remove the Hibernation Mode IE from the beacon and does not continue the hibernation process.

### 15.6.14.4 MLME-WAKE.indication

This indication informs the DME that the MAC sublayer has begun the process of exiting hibernation.

The definition of this primitive is:

```
MLME-WAKE.indication(
    )
```

#### 15.6.14.4.1 When generated

This indication is generated by the MLME when it begins to scan the channel in preparation for resuming transmission of beacons after a hibernation period. This indication is generated even if an MLME-WAKE request was not issued.

#### 15.6.14.4.2 Effect of receipt

The recipient is notified that the MAC sublayer is scanning the channel and is preparing to resume transmission of beacons. The DME may make another MLME-HIBERNATE request at any time after receiving a MLME-WAKE indication.

### 15.6.14.5 MLME-WAKE.confirm

This primitive confirms that the attempt to end hibernation in response to an MLME-WAKE request has completed. Upon successful completion of this request the device will have resumed transmission of beacons.

The definition of this primitive is:

```
MLME-WAKE.confirm(
    ResultCode
    )
```

ResultCode indicates whether transmission of beacons has successfully resumed. A BP must have passed with a beacon being transmitted for the confirmation to complete successfully. If ending hibernation is not succeeding, it is a vendor specific decision when to time out the operation and return FAILURE.

#### 15.6.14.5.1 When generated

This primitive is generated by the MLME as a result of an MLME-WAKE.request. The operation is successfully completed once a beacon has been transmitted. If the wake request occurred before the last beacon with the Hibernation Mode IE was transmitted, the operation is completed successfully once a beacon is transmitted

DRAFT 2009



Copyright International Organization for Standardization
Provided by IHS under license with ISO
No reproduction or networking permitted without license from IHS
Not for Resale

without the Hibernation Mode IE. If transmission of beacons cannot resume, a confirmation is generated with a status of FAILURE.

#### 15.6.14.5.2 Effect of receipt

The recipient is notified of the results of the procedure of exiting hibernation.

### 15.6.14.6 MLME-HIBERNATION-ANCHOR.request

This enables the transmission of the Hibernation Anchor IE in the beacon.

The definition of this primitive is:

```
MLME-HIBERNATION-ANCHOR.request(
    AnchorOperation
    )
```

#### 15.6.14.6.1 When generated

This primitive is generated by the DME to enable support for the Hibernation Anchor IE.

#### 15.6.14.6.2 Effect of receipt

The MAC sublayer indicates support for acting as a hibernation anchor in its Capabilities IE and includes a Hibernation Anchor IE in its beacon after receiving a Hibernation IE from any neighbour.

### 15.6.14.7 MLME-HIBERNATION-ANCHOR.indication

This indication informs the DME of reception of a Hibernation Anchor IE.

The definition of this primitive is:

```
MLME-HIBERNATION-ANCHOR.indication(
    )
```

#### 15.6.14.7.1 When generated

This primitive is generated by the MLME when a Hibernation Anchor IE is received in the beacon.

#### 15.6.14.7.2 Effect of receipt

The recipient is notified of the reception of a Hibernation Anchor IE.

### 15.6.14.8 MLME-HIBERNATION-ANCHOR.confirm

This primitive indicates the result of an MLME-HIBERNATION-ANCHOR.request.

The definition of this primitive is:

```
MLME-HIBERNATION-ANCHOR.confirm(
    ResultCode
    )
```

ResultCode indicates the result of the request to act as a hibernation anchor. Possible codes are SUCCESS and FAILURE.

#### 15.6.14.8.1 When generated

This primitive is generated by the MLME in response to a MLME-HIBERNATION-ANCHOR.request.

#### 15.6.14.8.2 Effect of receipt

The recipient is notified of the completion of the request to act or cease acting as a hibernation anchor.

DRAFT 2009



Copyright International Organization for Standardization
Provided by IHS under license with ISO
No reproduction or networking permitted without license from IHS
Not for Resale

#### 15.6.14.9 MLME-SLEEP-SCHEDULE.request

This request informs the device in what MASs it should be available to receive traffic and when it can turn off its receiver.

The definition of this primitive is:

```
MLME-SLEEP-SCHEDULE.request(
    SleepMode,
    OnInHardReservations,
    OnInSoftReservations,
    OnForPCA,
    PCAMASCount,
    SleepSchedule
    )
```

SleepSchedule specifies the MASs during which the device should be capable of receiving a transmitted frame.

##### 15.6.14.9.1 When generated

This primitive is generated by the DME to control reception in the MAC sublayer.

##### 15.6.14.9.2 Effect of receipt

When the MLME receives this request, it updates its sleep schedule and PCA Availability IE.

#### 15.6.14.10 MLME-SLEEP-SCHEDULE.confirm

This primitive indicates the result of an MLME-SLEEP-SCHEDULE.request.

The definition of this primitive is:

```
MLME-SLEEP-SCHEDULE.confirm(
    ResultCode
    )
```

ResultCode indicates the result of the request to change the sleep schedule.

##### 15.6.14.10.1 When generated

This primitive is generated by the MLME as a result of an MLME-SLEEP-SCHEDULE.request.

##### 15.6.14.10.2 Effect of receipt

The recipient is notified of the results of the request.

### 15.6.15 Higher layer synchronization support

This mechanism supports the process of synchronization among higher-layer protocol entities residing within different devices. The actual synchronization mechanism in the higher layer is out of the scope of this Standard. In principle, the MLME indicates the transmission/reception of frames with a specific multicast address in the DestAddr field of an MSDU of type data. The primitives covered in this Clause are listed in Table 93.

Table 93 - Higher layer synchronization support primitives

| Service Primitive | Request | Indication | Response | Confirm |
|---|---|---|---|---|
| MLME-HL-SYNC | | 15.6.15.1 | | 15.6.15.2 |

DRAFT 2009



Copyright International Organization for Standardization
Provided by IHS under license with ISO
No reproduction or networking permitted without license from IHS
Not for Resale

Table 94 lists the parameters that appear in the primitives of this Clause.

Table 94 - Higher Layer Synchronization primitive parameters

| Name | Type | Valid range | Description |
|---|---|---|---|
| GroupEUI | EUI-48 | Any valid multicast EUI-48 | Specifies the multicast group to which the synchronization frames are addressed. A synchronization frame is a data type frame with higher layer synchronization information |
| ResultCode | Enumeration | SUCCESS, NOT_SUPPORTED | Indicates the result of the MLME-HL-SYNC request |
| SrcEUI | EUI-48 | Any valid unicast EUI-48 | Specifies the EUI-48 of the device that transmitted the higher layer synchronization frame |
| SequenceNumber | Integer | As defined in the frame format | Specifies the Sequence Number of the higher layer synchronization frame received or transmitted |

MLME-HL-SYNC.request

This primitive requests activation of the synchronization support mechanism.

The definition of this primitive is:

```
MLME-HL-SYNC.request(
    GroupEUI
    )
```

#### 15.6.15.0.1 When generated

This primitive is generated by the DME when a higher layer protocol initiates a synchronization process.

#### 15.6.15.0.2 Effect of receipt

This request activates the synchronization support mechanism at the device. The MLME subsequently issues an MLME-HL-SYNC.confirm that reflects the results of the higher layer synchronization support request. If the request has been successful, and the higher layer synchronization support mechanism has been activated, the MLME issues an MMLE-HL-SYNC.indication whenever a higher layer synchronization frame, which is a data type frame with the specified McstAddr in the DestAddr field, is received or transmitted.

### 15.6.15.1 MLME-HL-SYNC.indication

This primitive indicates the transmission or reception of a higher layer synchronization frame. The indication is delivered with respect to the start of the frame on the medium, whether transmitted or received by the MAC sublayer.

The definition of this primitive is:

```
MLME-HL-SYNC.indication(
    GroupEUI,
    SrcEUI,
    SequenceNumber
    )
```



Copyright International Organization for Standardization
Provided by IHS under license with ISO
No reproduction or networking permitted without license from IHS
Not for Resale

#### 15.6.15.1.1 When generated

This primitive is generated by the MLME when the successful reception or transmission of a higher layer synchronization frame is detected, as indicated by the PHY. The higher layer synchronization frame is identified by the McstAddr registered by an earlier MLME-HL-SYNC.request primitive, in the DestAddr field of a data type frame.

#### 15.6.15.1.2 Effect of receipt

The DME is notified of the reception or transmission of a higher layer synchronization frame.

### 15.6.15.2 MLME-HL-SYNC.confirm

This primitive confirms the activation of the higher layer synchronization support mechanism.

The definition of this primitive is:

```
MLME-HL-SYNC.confirm(
    ResultCode
    )
```

#### 15.6.15.2.1 When generated

This primitive is generated by the MLME as a result of an MLME-HL-SYNC.request to activate the higher layer synchronization support mechanism for a particular multicast address.

#### 15.6.15.2.2 Effect of receipt

The DME is notified of the activation of the higher layer synchronization support mechanism. The result code of NOT_SUPPORTED is issued if the MLME does not support the higher layer synchronization support mechanism or if the address provided by the MLME-HL-SYNC.request is not a multicast address.

## 15.6.16 Reservation management

The DRP provides methods for devices to establish, modify and release reservations. Reservation negotiations are requested by the DME and confirmed by the MLME via the service primitives defined in this Clause. There are two conceptual interface options between the DME and MLME defined in this Clause. The MLME-RESOURCE primitives provide a high-level interface where resource allocation is handled within the MLME. The MLME-DRP primitives provide a low-level interface where resource allocation is handled in the DME using information obtained from the MLME using the MLME-LINK-EVENT primitives. Clause 15.6.16.1 illustrates a reference model and indicates the interface locations. Table 95 summarizes the reservation management service primitives.

Table 95 - DRP service primitives

| Service primitive | Request | Indication | Response | Confirm |
|---|---|---|---|---|
| MLME-RESOURCE | 15.6.16.2 | 15.6.16.3 | 15.6.16.4 | 15.6.16.5 |
| MLME-DRP | 15.6.16.6 | 15.6.16.7 | 15.6.16.8 | 15.6.16.9 |

DRAFT 2009



Copyright International Organization for Standardization
Provided by IHS under license with ISO
No reproduction or networking permitted without license from IHS
Not for Resale

Table 96 defines the parameters used by the DRP service primitives.

Table 96 - DRP service primitive parameters

| Name | Type | Valid range | Description |
|---|---|---|---|
| AvailabilityBitmap | Implementation-dependent | | Specifies the MASs available for DRP reservation. |
| DestEUI | EUI-48 | Any valid EUI-48, or NULL for PCA reservations | Identifies the respondent (either a single device or a multicast group) in the DRP negotiation initiated by the device identified by SrcEUI. |
| Explicit | Boolean | FALSE, TRUE | Controls whether DRP negotiation is implicit or explicit. |
| FinalReservation | Boolean | FALSE, TRUE | Valid for multicast reservations, only. When TRUE, the final reservation is signaled to the multicast recipients. |
| MinBW | Integer | 0 - 480 000 | Minimum required bandwidth for the reservation, in Kbps. |
| DesiredBW | Integer | 0 - 480 000 | Desired bandwidth for the reservation, in Kbps. Shall not be lower than the MinBW parameter. |
| AvailableBW | Integer | 0 - 480 000 | Bandwidth estimated to be available for the reservation, in Kbps. For the initiator of the reservation shall not exceed the DesiredBW parameter and shall not be below MinBW. |
| ReasonCode | Enumeration | ACCEPTED, CONFLICT, PENDING,DENIED | Additional completion status information for the MLME request. |
| MaxServiceInterval | Integer | 1 - 255 | Maximum service interval acceptable for the reservation, in units of MASs. |
| QoSGoal | Enumeration | PREMIUM, HIGH, BEST_EFFORT | The Quality of Service goal of the connection to be served by the reservation. May be mapped to target Packet Error Rate (PER) and margins (SNR, reservation time) for the connection. |
| ReservationBitmap | Implementation-dependent | | Specifies the MASs desired or obtained for the reservation. |
| ReservationType | Enumeration | HARD, SOFT, PRIVATE, or PCA as specified by Table 118 | Reservation type |
| ResultCode | Enumeration | FAILURE, SUCCESS, TIMEOUT, MODIFIED | Completion status of the MLME request |
| SrcEUI | EUI-48 | Any valid unicast EUI-48 | Identifies the DRP negotiation initiator |
| StreamIndex | Integer | 0 - 7, as specified in 16.2.1.5 | Identifies a stream from the device identified by SrcEUI to the device(s) identified by DestEUI |

DRAFT



Copyright International Organization for Standardization
Provided by IHS under license with ISO
No reproduction or networking permitted without license from IHS
Not for Resale

*NOTE*
*For the recipient of the reservation request the estimation of the available bandwidth may differ from the one at the initiator side due to asymmetric link conditions.*

Although the actual format of AvailabilityBitmap and ReservationBitmap is implementation-dependent, conceptually it is an array of 256 entries, each of which corresponds to one of the 256 MASs within a superframe. The zero entries identify MASs that are to be excluded from the reservation while non-zero entries identify MASs that are to be included.

### 15.6.16.1 Resource allocation and rate adaptation reference model

Figure 32 shows a reference model for the resource allocation and rate adaptation architecture. Requirements for resources coming from an application are expressed in terms of required bandwidth and quality of service parameters. Depending on the specific implementation of higher layer functions, specific functionality may be allocated either in the MAC sublayer or in the DME.

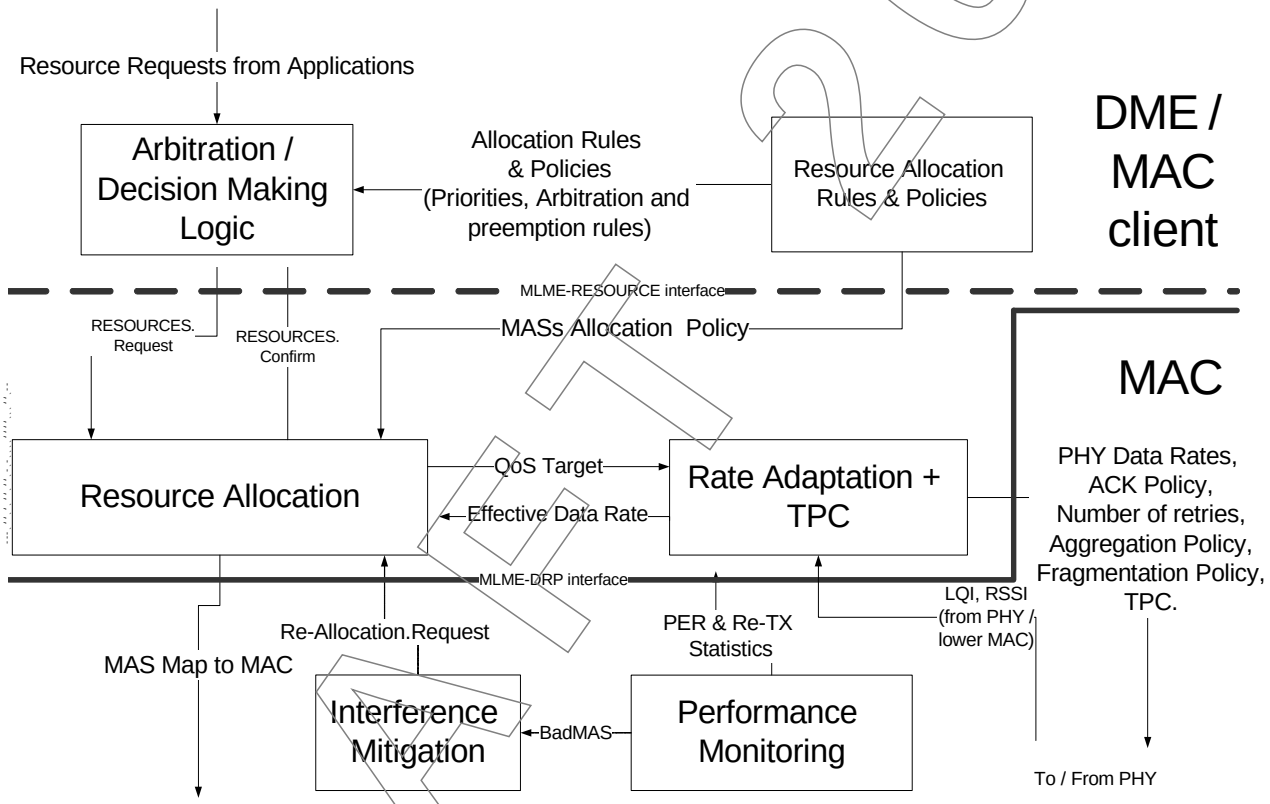


*Figure 32 - Resource allocation and rate adaptation reference model*

### 15.6.16.2 MLME-RESOURCE.request

This primitive requests the creation of a new reservation or the modification or release of an existing reservation. The primitive's semantics are as follows:

```
MLME-RESOURCE.request(
    DestEUI,
    StreamIndex,
    ReservationType,
    MinBW,
    DesiredBW,
    MaxServiceInterval,
    QOSGoal,
```



Copyright International Organization for Standardization
Provided by IHS under license with ISO
No reproduction or networking permitted without license from IHS
Not for Resale

```
Explicit
)
```

The MinBW and DesiredBW parameters define the BW requirements for the reservation. If these parameters are set to zero, this indicates the release of the reservation.

#### 15.6.16.2.1 When generated

The DME signals this primitive to the MLME in order to create a new reservation, modify an existing reservation or release an existing reservation.

#### 15.6.16.2.2 Effect of receipt

Based on the parameters of the resources request primitive and the condition of the link with the respondent of the reservation, the MLME constructs one or more DRP IEs that provide the desired new reservation or changes to the reservation and either a) includes the DRP IEs in a subsequent beacon transmission or b) transmits the DRP IEs in a command frame to the device identified by DestEUI. Once DRP negotiation, either implicit or explicit, respectively, is initiated, the MLME completes it as specified in 17.4.

If the source is not able to support the requested resource reservation with the parameters included in the MLME-DRP.request, the MLME responds with an MLME-RESOURCE.confirm with ResultCode set to FAILURE and does not initiate the DRP negotiation process.

### 15.6.16.3 MLME-RESOURCE.indication

This primitive indicates a request from a peer DME to create a new reservation or to modify or release an existing reservation. The primitive's semantics are as follows:

```
MLME-RESOURCE.indication(
    DestEUI,
    SrcEUI,
    StreamIndex,
    ReservationType,
    AvailableBW,
    ReservationBitmap,
    Explicit
    )
```

The ReservationBitmap identifies the MASs proposed by the reservation owner to be included in the new or modified reservation. If no MASs are identified in the ReservationBitmap, the reservation is released.

#### 15.6.16.3.1 When generated

The MLME generates this primitive either when a DRP request to create a new reservation or modify an existing reservation is received, or when changes in PHY channel conditions cause a decrease in AvailableBW. Note that the MLME also generates this primitive when a reservation is released.

#### 15.6.16.3.2 Effect of receipt

The DME evaluates the reservation request in terms of the device's availability and generates an MLME RESOURCE.response.

### 15.6.16.4 MLME-RESOURCE.response

The DME uses this primitive to respond to a request for the creation of a new reservation or the modification or release of an existing reservation. The primitive's semantics are as follows:



Copyright International Organization for Standardization
Provided by IHS under license with ISO
No reproduction or networking permitted without license from IHS
Not for Resale

```
MLME-RESOURCE.response(
    DestEUI,
    SrcEUI,
    StreamIndex,
    ReasonCode,
    ResultCode
    )
```

#### 15.6.16.4.1 When generated

The DME generates this primitive in order to trigger a response to a reservation request.

#### 15.6.16.4.2 Effect of receipt

The MLME constructs one or more DRP IEs that describe the DRP reservation response and either a) includes the DRP IEs in a subsequent beacon transmission or b) transmits the DRP IEs in a command frame to the device identified by DestEUI.

### 15.6.16.5 MLME-RESOURCE.confirm

This primitive signals the completion, successfully or in error, of DRP negotiations initiated by a corresponding MLME-RESOURCE.request. The primitive's semantics are as follows:

```
MLME-RESOURCE.confirm(
    AvailableBW,
    ResultCode,
    ReasonCode
    )
```

#### 15.6.16.5.1 When generated

The MLME signals this primitive to the DME in order to confirm the success or failure of DRP negotiations initiated by a corresponding MLME-RESOURCE.request, or to indicate to the DME that there is a change in available bandwidth (AvailableBW).

For explicit unicast negotiations, if a DRP reservation response command frame is not received within an application-specific timeout after the DRP reservation request is sent, the MLME informs the DME by issuing a MLME-RESOURCE.confirm with ResultCode equal to TIMEOUT. Once a DRP reservation response command frame is received, the source informs the DME by generating an MLME-RESOURCE.confirm with the appropriate ResultCode.

For implicit unicast negotiations, if a DRP reservation response is not received within a time interval equal to mMaxLostBeacons after the final DRP reservation request is sent, the MLME informs the DME by issuing an MLME-RESOURCE.confirm with ResultCode equal to TIMEOUT.

Once a DRP reservation response is received, the source informs the DME by generating an MLME-RESOURCE.confirm with the appropriate ResultCode.

If the PHY channel conditions change in a way that modifies the effective bandwidth available for this reservation (AvailableBW), the MLME will also issue the MLME-RESOURCE.confirm with ResultCode equal to MODIFIED, and the new estimated AvailableBW parameter.

#### 15.6.16.5.2 Effect of receipt

Depending on the value of ResultCode and ReasonCode, the DME should take appropriate action. For example, if the reservation was established successfully, the DME may signal the MAC client to transfer data to the MAC for that stream. If the

DRAFT 2009



Copyright International Organization for Standardization
Provided by IHS under license with ISO
No reproduction or networking permitted without license from IHS
Not for Resale

DRP negotiation failed, or the available bandwidth has changed, the DME should signal the lack of resources to the MAC client.

#### 15.6.16.6 MLME-DRP.request

This primitive requests the creation of a new reservation or the modification or release of an existing reservation. The primitive's semantics are as follows:

```
MLME-DRP.request(
    DestEUI,
    StreamIndex,
    ReservationType,
    ReservationBitmap,
    FinalReservation,
    Explicit
    )
```

The ReservationBitmap parameter defines the MASs to include in a new or modified reservation. If no MASs are identified in the ReservationBitmap, that indicates the reservation is released.

##### 15.6.16.6.1 When generated

This DME signals this primitive to the MLME in order to create a new reservation, modify an existing reservation or release an existing reservation.

##### 15.6.16.6.2 Effect of receipt

The MLME constructs one or more DRP IEs that describe the desired new reservation or changes to the reservation and either a) includes the DRP IEs in a subsequent beacon transmission or b) transmits the DRP IEs in a command frame to the device identified by DestEUI. Once DRP negotiation, either implicit or explicit, respectively, is initiated, the MLME completes it as specified in 17.4.

In order to negotiate a reservation, the MAC sublayer constructs DRP IEs according to the parameters of the MLME-DRP.request provided by the DME. If the source is not able to support the requested DRP reservation with the parameters included in the MLME-DRP.request, the MLME responds with an MLME-DRP.confirm with ResultCode set to FAILURE and does not initiate the DRP negotiation process.

#### 15.6.16.7 MLME-DRP.indication

This primitive indicates a request from a peer DME to create a new reservation or to modify or release an existing reservation. The primitive's semantics are as follows:

```
MLME-DRP.indication(
    DestEUI,
    SrcEUI,
    StreamIndex,
    ReservationType,
    ReservationBitmap,
    Explicit
    )
```

The ReservationBitmap identifies the MASs proposed by the reservation owner to be included in the new or modified reservation. If no MASs are identified in the ReservationBitmap, the reservation is released.

##### 15.6.16.7.1 When generated

The MLME generates this primitive when a DRP request to create a new reservation or modify an existing reservation is received. It also generates this primitive when a reservation is released.

DRAFT 2009



Copyright International Organization for Standardization
Provided by IHS under license with ISO
No reproduction or networking permitted without license from IHS
Not for Resale

#### 15.6.16.7.2 Effect of receipt

The DME evaluates the reservation request in terms of the device's availability and generates an MLME DRP.response.

### 15.6.16.8 MLME-DRP.response

The DME uses this primitive to respond to a request for the creation of a new reservation or the modification or release of an existing reservation. The primitive's semantics are as follows:

```
MLME-DRP.response(
    DestEUI,
    SrcEUI,
    StreamIndex,
    ReservationType,
    ReservationBitmap,
    Explicit,
    ReasonCode,
    ResultCode
    )
```

#### 15.6.16.8.1 When generated

The DME generates this primitive in order to respond to a reservation request.

#### 15.6.16.8.2 Effect of receipt

The MLME constructs one or more DRP IEs that describe the DRP reservation response and either a) includes the DRP IEs in a subsequent beacon transmission or b) transmits the DRP IEs in a command frame to the device identified by DestEUI.

### 15.6.16.9 MLME-DRP.confirm

This primitive signals the completion, successfully or in error, of DRP negotiations initiated by a corresponding MLME-DRP.request. The primitive's semantics are as follows:

```
MLME-DRP.confirm(
    AvailabilityBitmap,
    ResultCode,
    ReasonCode
    )
```

#### 15.6.16.9.1 When generated

The MLME signals this primitive to the DME in order to confirm the success or failure of DRP negotiations initiated by a corresponding MLME-DRP.request.

For explicit unicast negotiations, if a DRP reservation response command frame is not received within an application-specific timeout after the DRP reservation request is sent, the MAC sublayer informs the DME by issuing a MLME-DRP.confirm with ResultCode equal to TIMEOUT. Once a DRP reservation response command frame is received, the source informs the DME by generating an MLME-DRP.confirm with the appropriate ResultCode.

For implicit unicast negotiations, if a DRP reservation response is not received within a time interval equal to mMaxLostBeacons superframes after the final DRP reservation request is sent, the MAC sublayer informs the DME by issuing an MLME-DRP.confirm with ResultCode equal to TIMEOUT.

Once a DRP reservation response is received, the source informs the DME by generating an MLME-DRP.confirm with the appropriate ResultCode.

DRAFT 2009



Copyright International Organization for Standardization
Provided by IHS under license with ISO
No reproduction or networking permitted without license from IHS
Not for Resale

#### 15.6.16.9.2 Effect of receipt

Dependent upon the value of ResultCode and ReasonCode, the DME should take appropriate action. For example, if the reservation is established successfully, the DME may signal the MAC client to transfer data to the MAC sublayer for that stream. If the DRP negotiation failed, the DME should signal the lack of resources to the responsible MAC client (higher-layer entity).

### 15.6.17 Connection configuration primitives

This mechanism provides control over the rate adaptation algorithm and metrics. The primitives covered in this Clause are listed in Table 97.

Table 97 - Connection configuration primitives

| Service primitive | Request | Indication | Response | Confirm |
|---|---|---|---|---|
| MLME-CONNECTION-CONFIG | 15.6.17.1 | | | 15.6.17.2 |

Table 98 defines the parameters that appear in the primitives of this Clause.

Table 98 - Connection configuration primitive parameters

| Name | Type | Valid range | Description |
|---|---|---|---|
| DestEUI | EUI-48 | Any valid EUI-48 | Specifies the EUI-48 of remote responding device |
| DeliveryID | Integer | 0 - 15 | Specifies the user priority of the MSDU for a value in range 0 through 7, or the stream index of the MSDU for a value in range 8 through 15 |
| PHYRate | Enumeration | RATE_53_3, RATE_80, RATE_106_7, RATE_160, RATE_200, RATE_320, RATE_400, RATE_480 | PHY data rate at which packets are to be transmitted for the given connection |
| ACKPolicy | Enumeration | No_ACK / Imm-ACK / B-ACK | ACK policy to be used on the given connection |
| NOfReTX | Integer | 1 - MaxNOfReTX | Number of re-transmissions allowed for a given connection |
| OptimalMPDUSize | Integer | PHY dependent | Optimal MPDU size for a given connection |
| AggregationPolicy | Enumeration | ENABLED, DISABLED | Aggregation policy enabled / disabled for a given connection |
| FragmentationPolicy | Enumeration | ENABLED, DISABLED | Fragmentation policy enabled / disabled for a given connection |
| ResultCode | Enumeration | FAILURE, SUCCESS | Completion status of the MLME request |

DRAFT



Copyright International Organization for Standardization
Provided by IHS under license with ISO
No reproduction or networking permitted without license from IHS
Not for Resale

#### 15.6.17.1 MLME-CONNECTION-CONFIG.request

This primitive is used to configure the rate adaptation parameters of a particular connection. The definition of this primitive is:

```
MLME-CONNECTION-CONFIG.request(
    DestEUI,
    DeliveryID,
    PHYRate,
    ACKPolicy,
    NOfReTX,
    OptimalMPDUSize,
    AggregationPolicy,
    FragmentationPolicy
    )
```

##### 15.6.17.1.1 When generated

The primitive is generated by the DME whenever there is a need to update the parameters of the connection related to PHY rate adaptation.

##### 15.6.17.1.2 Effect of receipt

Upon reception of the primitive, the MLME will update the configuration of the specific connection with the parameters of the primitive, and will generate the MLME-CONNECTION-CONFIG.confirm response.

#### 15.6.17.2 MLME-CONNECTION-CONFIG.confirm

The definition of this primitive is:

```
MLME-CONNECTION-CONFIG.confirm(
    DestEUI,
    DeliveryID,
    ResultCode
    )
```

##### 15.6.17.2.1 When generated

This primitive is generated by the MLME in response to the MLME-CONNECTION-CONFIG.request.

##### 15.6.17.2.2 Effect of receipt

Upon reception of this primitive, the DME is notified of the success or failure of the updated connection configuration.

### 15.6.18 Range measurement

This mechanism supports range measurement between a device and a neighbour. The primitives covered in this Clause are listed in Table 99.

Table 99 - Range measurement service primitives

| Service primitive | Request | Indication | Response | Confirm |
|---|---|---|---|---|
| MLME-RANGE-MEASUREMENT | 15.6.18.1 | 15.6.18.2 | | 15.6.18.3 |

DRAFT 2009



Copyright International Organization for Standardization
Provided by IHS under license with ISO
No reproduction or networking permitted without license from IHS
Not for Resale

Table 100 defines the parameters used by the range measurement service primitives.

Table 100 - Range measurement parameters

| Name | Type | Valid Range | Description |
|---|---|---|---|
| Result | Enumeration | FAILURE, SUCCESS | Indicates the result of the range measurement operation |
| LREnable | Boolean | FALSE, TRUE | If TRUE, enable local range measurement, otherwise disable |
| DestEUI | EUI-48 | Any valid unicast EUI-48 | Specifies the EUI-48 of the remote responding device |
| SrcEUI | EUI-48 | Any valid unicast EUI-48 | Specifies the EUI-48 of the remote requesting device |
| RMN | Integer | 0 - 255 | Number of measurements requested |
| MeasurementResultSet | Array | As described in Figure 55 | Range measurement results |
| MeasurementResultSetCount | Integer | 0 - 255 | Number of measurement results in MeasurementResultSet |

#### 15.6.18.1 MLME-RANGE-MEASUREMENT.request

This primitive is used to initiate one or more consecutive ranging measurements.

```
MLME-RANGE-MEASUREMENT.request(
    DestEUI,
    RMN
    )
```

##### 15.6.18.1.1 When generated

The DME signals this primitive to the MLME to initiate range measurement with a neighbour of the device. Parameter RMN may be one (for a simple estimate) or greater than one, so that the results of repeated measurements can be used to improve accuracy.

##### 15.6.18.1.2 Effect of receipt

The MLME generates frames to deliver over the medium to carry out the requested range measurements, and then delivers the result data to the DME.

#### 15.6.18.2 MLME-RANGE-MEASUREMENT.indication

This primitive is used to inform the DME that a range measurement request was received.

```
MLME-RANGE-MEASUREMENT.indication(
    SrcEUI,
    RMN
    )
```

##### 15.6.18.2.1 When generated

The MLME signals this primitive to the DME when it receives a range Measurement command frame with Range Type set to Range Measurement Request.

##### 15.6.18.2.2 Effect of receipt

The DME is advised that a range measurement operation has started.



Copyright International Organization for Standardization
Provided by IHS under license with ISO
No reproduction or networking permitted without license from IHS
Not for Resale

#### 15.6.18.3 MLME-RANGE-MEASUREMENT.confirm

This primitive reports the results of a range measurement operation.

```
MLME-RANGE-MEASUREMENT.confirm(
    Result,
    MeasurementResultSet,
    MeasurementResultSetCount
    )
```

##### 15.6.18.3.1 When generated

The MLME signals this primitive to the DME when it has completed a requested range measurement operation.

##### 15.6.18.3.2 Effect of receipt

As specified in Annex G, the DME may use a single measurement result to calculate a single range estimate. Local and remote ranging clock options may be used to calculate confidence levels or error probabilities. Multiple measurements may be used to detect and correct for frequency errors between the local and remote clock frequencies.

### 15.6.19 Application-specific command management

The MAC sublayer provides application-specific command frames for sending control information for the MAC client. At the sending device, command data is passed via the primitives in this Clause**,** along with the parameters describing the attributes of the command, to the MAC sublayer for transfer to a peer MAC sublayer for unicast traffic or a group of MAC entities for multicast or broadcast traffic. At the recipient device, the MAC sublayer delivers received application-specific command data to the MAC client.

Application-specific commands may be fragmented for transfer between peer MAC entities.

Application-specific commands may be transmitted using PCA or within DRP reservations.

The primitives covered in this Clause are listed in Table 101.

Table 101 - Application-specific command management primitives

| Service primitive | Request | Indication | Response | Confirm |
|---|---|---|---|---|
| MLME-AS-COMMAND | 15.6.19.1 | 15.6.19.2 | | 15.6.19.3 |

DRAFT 2009



Copyright International Organization for Standardization
Provided by IHS under license with ISO
No reproduction or networking permitted without license from IHS
Not for Resale

Table 102 lists the parameters that appear in the MLME-AS-COMMAND primitives defined in this Clause.

Table 102 - Application-specific command management parameters

| Name | Type | Valid range | Description |
|---|---|---|---|
| DestEUI | EUI-48 | Any valid EUI-48 | Specifies the EUI-48 of the recipient device of the MCDU. |
| SrcEUI | EUI-48 | Any valid unicast EUI-48 | Specifies the EUI-48 of the sending device of the MCDU. |
| TKID | Integer | Any valid TKID as defined in 16.2.6.1, or zero | Specifies a PTK or GTK used for protecting the MCDU. If zero, indicates no security protection for this MCDU. |
| ACKPolicy | Enumeration | ACK, NO_ACK | Specifies whether or not the MCDU requires acknowledgement. |
| TxTimeout | Duration | 0 - 65 535 | Specifies the amount of time in milliseconds in which the MCDU needs to be successfully sent. |
| ASCommandData | Array | Variable | Specifies the data passing the MLME-AS-COMMAND before transmission or after reception. |
| ResultCode | Enumeration | SUCCESS, TX_TIMEOUT, OTHER_REASONS | Indicates the result of the MCDU transfer attempt. |

#### 15.6.19.1 MLME-AS-COMMAND.request

This primitive requests the transfer of an application-specific command to a peer MAC sublayer or a group of peer MAC entities.

The definition of this primitive is:

```
MLME-AS-COMMAND.request(
    DestEUI,
    TKID,
    ACKPolicy,
    TxTimeout,
    ASCommandData
    )
```

##### 15.6.19.1.1 When generated

This primitive is generated by the MAC client when an application-specific command is to be transferred to a specified recipient.

##### 15.6.19.1.2 Effect of receipt

The MAC sublayer attempts to transmit the application-specific command frame using PCA or in a DRP reservation based on the other parameters provided in the primitive. The MAC sublayer subsequently issues a MLME-AS-COMMAND.confirm to reflect the results.

#### 15.6.19.2 MLME-AS-COMMAND.indication

This primitive reports the reception of an application-specific command from a specified sender.



Copyright International Organization for Standardization
Provided by IHS under license with ISO
No reproduction or networking permitted without license from IHS
Not for Resale

The definition of this primitive is:

```
MLME-AS-COMMAND.indication(
    SrcEUI,
    DestEUI,
    TKID,
    ACKPolicy,
    ASCommandData
    )
```

#### 15.6.19.2.1 When generated

This primitive is generated by the MAC sublayer to deliver to the MAC client a correctly received valid application-specific command frame addressed to this device.

#### 15.6.19.2.2 Effect of receipt

The MAC client is provided with a valid application-specific command frame addressed to this device from a specified sender.

### 15.6.19.3 MLME-AS-COMMAND.confirm

This primitive reports the result of an application-specific command frame transfer attempt to a specified recipient.

The definition of this primitive is:

```
MLME-AS-COMMAND.confirm(
    DestEUI,
    ResultCode
    )
```

#### 15.6.19.3.1 When generated

This primitive is generated by the MAC sublayer as a result of a MLME-AS-COMMAND.request to transfer an application-specific command frame to a specified recipient.

#### 15.6.19.3.2 Effect of receipt

The MAC client is notified of the results of the attempt by the MAC sublayer to transfer an application-specific command frame based on the parameters specified in an earlier MLME-AS-COMMAND.request.

## 15.7 MAC SAP interface

The MAC sublayer provides a data transfer service to the MAC client via the MAC SAP, the logical data interface between the MAC client and the MAC sublayer. At the sending device, data is passed via the MAC SAP in MSDUs, along with the parameters describing the attributes of the MSDU, to the MAC sublayer for transfer to a peer MAC sublayer for unicast traffic or a group of MAC entities for multicast or broadcast traffic. At the recipient device, the MAC sublayer delivers received data also in MSDUs to the MAC client.

Each MSDU is tagged with a user priority or stream index as indicated by the Delivery ID parameter passed along with the MSDU at the MAC SAP. There are eight levels for user priority, and eight values for Stream Index designating up to eight possible streams between the sender and recipient. Legal values for the Delivery ID parameter are in the range of 0 to 15. A number in the range between 0 and 7, inclusive, denotes a user priority as defined by the IEEE 802.1D priority tag. A number in the range between 8 and 15, inclusive, identifies a stream from the sender to the recipient. The Delivery ID parameter is propagated across the wireless medium in the Delivery ID field of the Frame Control field of the MAC header.

DRAFT 2009



Copyright International Organization for Standardization
Provided by IHS under license with ISO
No reproduction or networking permitted without license from IHS
Not for Resale

Each device has an EUI-48 that, if non-NULL, uniquely identifies the device. This identifier is included in beacon frames, along with a 16-bit DevAddr selected by the device.

When an MSDU is delivered to the MAC sublayer by the MAC client, the device determines the DevAddr of the intended recipient based on the EUI-48 provided with the MSDU and information it receives in neighbours' beacons.

Before passing an MSDU to the MAC client, a device determines the EUI-48 of the sender of the MSDU using information it receives in neighbours' beacons.

All MSDUs labelled with the same Delivery ID and addressed to the same destination EUI-48 are transmitted in the order in which they arrived at the local MAC SAP when they are subject to the Imm-ACK or No-ACK acknowledgement policy. They may be transmitted out of order due to retries when the B-ACK acknowledgement policy is applied. However, MSDUs labelled with different Delivery ID values and/or addressed to different destination EUI-48s are not necessarily transmitted in the order in which they arrived at the local MAC SAP, since the MAC sublayer may reorder them for transmission based on their priorities and other considerations or constraints.

MSDUs of the same Delivery ID received by the recipient MAC sublayer are released to the MAC client via the local MAC SAP in the same order as they arrived at the MAC SAP of the sending device. The recipient MAC sublayer delivers MSDUs bearing different Delivery ID values to the MAC client in a fashion that preserves the respective orders of the MSDUs carrying the same Delivery ID values.

MSDUs may be fragmented or aggregated for transfer between peer MAC entities, but are always passed through the MAC SAP in whole MSDUs.

The MAC sublayer provides contention and reservation-based frame transfers. Contention based transfers use the prioritized contention access (PCA) method as specified in 17.2.3, while reservation-based transfers use the distributed reservation protocol (DRP) method as specified in 17.2.4. MSDUs tagged with a user priority are transmitted using PCA. MSDUs tagged with a Stream Index are transmitted primarily in a reservation and optionally by PCA.

The primitives covered in this Clause are listed in Table 103.

Table 103 - MAC-SAP primitives

| Service primitive | Request | Indication | Response | Confirm |
|---|---|---|---|---|
| MAC-DATA | 15.7.1 | 15.7.2 | | 15.7.3 |

DRAFT ISO



Copyright International Organization for Standardization
Provided by IHS under license with ISO
No reproduction or networking permitted without license from IHS
Not for Resale

Table 104 lists the parameters that appear in the MAC SAP primitives defined in this Clause.

Table 104 - MAC-SAP primitive parameters

| Name | Type | Valid range | Description |
|---|---|---|---|
| DestEUI | EUI-48 | Any valid EUI-48 | Specifies the EUI-48 of the recipient device of the MSDU |
| SrcEUI | EUI-48 | Any valid unicast EUI-48 | Specifies the EUI-48 of the sending device of the MSDU |
| TKID | Integer | Any valid TKID as defined in 16.2.6.1 or zero | Specifies a PTK or GTK used for protecting the MSDU. If zero, indicates no security protection for this MSDU |
| DeliveryID | Integer | 0 - 15 | Specifies the user priority of the MSDU for a value in range 0 through 7, or the stream index of the MSDU for a value in range 8 through 15 |
| TransmitTimeout | Duration | 0 - 65 535 | Specifies the amount of time in milliseconds in which the MSDU needs to be successfully sent |
| MSDU | Octet string | | Specifies the data passing the MAC SAP before transmission or after reception |
| ResultCode | Enumeration | SUCCESS, TRANSMIT_TIMEOUT, OTHER_REASONS | Indicates the result of the MSDU transfer attempt |

### 15.7.1 MAC-DATA.request

This primitive requests the transfer of an MSDU to a peer MAC sublayer or a group of peer MAC entities.

The definition of this primitive is:

```
MAC-DATA.request(
    DestEUI,
    TKID,
    DeliveryID,
    TransmitTimeout,
    MSDU
    )
```

#### 15.7.1.1 When generated

This primitive is generated by the MAC client when an MSDU is to be transferred to a specified recipient.

#### 15.7.1.2 Effect of receipt

The MAC sublayer attempts to transmit the MSDU based on the other parameters provided in the primitive. The MAC sublayer subsequently issues a MAC-DATA.confirm to reflect the results.

### 15.7.2 MAC-DATA.indication

This primitive reports the reception of an MSDU from a specified sender.

The definition of this primitive is:



Copyright International Organization for Standardization
Provided by IHS under license with ISO
No reproduction or networking permitted without license from IHS
Not for Resale

```
MAC-DATA.indication(
    SrcEUI,
    DestEUI,
    TKID,
    DeliveryID,
    MSDU
    )
```

#### 15.7.2.1 When generated

This primitive is generated by the MAC sublayer to deliver to the MAC client a received MSDU addressed to this device.

#### 15.7.2.2 Effect of receipt

The MAC client is provided with an MSDU addressed to this device from a specified sender.

### 15.7.3 MAC-DATA.confirm

This primitive reports the result of an MSDU transfer attempt to a specified recipient.

The definition of this primitive is:

```
MAC-DATA.confirm(
    DestEUI,
    DeliveryID,
    ResultCode
    )
```

#### 15.7.3.1 When generated

This primitive is generated by the MAC sublayer as a result of a MAC-DATA.request to transfer an MSDU to a specified recipient.

#### 15.7.3.2 Effect of receipt

The MAC client is notified of the results of the attempt by the MAC sublayer to transfer an MSDU based on the parameters specified in an earlier MAC-DATA.request.

# 16 MAC frame formats

This Clause specifies the format of MAC frames. An overview of the MAC frame with descriptions of common fields is followed by Clauses for each frame type and subtype. The final Clause contains a list of information elements that may appear in beacon frames and some command frames.

## 16.1 Frame format conventions

The following conventions and definitions apply throughout this Clause.

### 16.1.1 Figures

MAC frames are described as a sequence of fields in a specific order. Figures in Clause 16 depict fields in the order they are delivered to the PHY SAP, from left to right, where the left-most field is transmitted first in time. In field figures, bits within the field are numbered from the least-significant bit on the right to the most-significant bit on the left.

An example sequence of fields is defined in Figure 33.

DRAFT 2009



Copyright International Organization for Standardization
Provided by IHS under license with ISO
No reproduction or networking permitted without license from IHS
Not for Resale

| octets: 2 | 1 | ... | 4 |
|---|---|---|---|
| First field transmitted (2 octets) | Second field transmitted (1 octet) | … | Last field transmitted (4 octets) |

*Figure 33 - Example sequence of fields*

### 16.1.2 Octet order

Unless otherwise noted, fields longer than a single octet are delivered to the PHY SAP in order from the octet containing the least-significant bits to the octet containing the most-significant bits.

An example of a bitmap specification for a two-octet field is defined in Figure 34.

| bits: b15-b13 | b12-b8 | b7-b0 |
|---|---|---|
| Most-significant bits of second octet transmitted | Least-significant bits of second octet transmitted | First octet transmitted |

*Figure 34 - Example bitmap specification for a field*

### 16.1.3 Encoding

Values specified in decimal are encoded in unsigned binary unless otherwise stated.

A bitmap is a sequence of bits, labelled as bit[0] through bit[N-1]. A bitmap is encoded in a field such that bit[0] corresponds to the least-significant bit of the field and subsequent bitmap elements correspond to subsequent significant bits of the field. Octets of the field are presented to the PHY SAP in order from least-significant octet to most-significant octet.

Reserved fields and subfields are set to zero on transmission and ignored on reception. Fields and subfields are not set to reserved values on transmission. Unless otherwise noted, fields or subfields that are set to reserved values or are defined based on other fields or subfields that are set to reserved values are ignored on reception.

## 16.2 General MAC frame format

A MAC frame consists of a fixed-length MAC Header and an optional variable-length MAC Frame Body. The MAC Header is defined in Figure 35.

| octets: 2 | 2 | 2 | 2 | 2 |
|---|---|---|---|---|
| Frame Control | DestAddr | SrcAddr | Sequence Control | Access Information |

*Figure 35 - MAC Header format*

DRAFT



Copyright International Organization for Standardization
Provided by IHS under license with ISO
No reproduction or networking permitted without license from IHS
Not for Resale

The MAC Frame Body, when present, contains a Frame Payload and Frame Check Sequence (FCS) as defined in Figure 36.

| octets: $L_n$ | 4 |
|---|---|
| Frame Payload | FCS |

*Figure 36 - MAC Frame Body format*

In secure frames the Frame Payload includes security fields as defined in Figure 37. The left-most four fields in Figure 37 are collectively referred to as the Security Header.

| octets: 3 | 1 | 2 | 6 | P | 8 |
|---|---|---|---|---|---|
| Temporal Key Identifier (TKID) | Security Reserved | Encryption Offset (EO) | Secure Frame Number (SFN) | Secure Payload | Message Integrity Code (MIC) |

*Figure 37 - Frame Payload field format for secure frames*

The Frame Payload length ranges from zero to pMaxFramePayloadSize. If the Frame Payload length is zero, the FCS field is not included, and there is no MAC Frame Body. The Frame Payload length includes the length of the security fields for a secure frame.

In this Clause, a reference to the payload of a frame indicates the Frame Payload field of a non-secure frame, or the Secure Payload field of a secure frame. The payload is a sequence of octets labelled as payload[0] through payload[P-1]. Octets are passed to the PHY SAP in ascending index-value order.

### 16.2.1 Frame control

The Frame Control field is defined in Figure 38.

| bits: b15-b14 | b13 | b12-b9 | b8-b6 | b5-b4 | b3 | b2-b0 |
|---|---|---|---|---|---|---|
| Reserved | Retry | Frame Subtype / Delivery ID | Frame Type | ACK Policy | Secure | Protocol Version |

*Figure 38 - Frame Control field format*

#### 16.2.1.1 Protocol version

The Protocol Version field is invariant in size and placement across all revisions of this Standard. For this revision of the Standard, Protocol Version is set to zero. All other values are reserved.

#### 16.2.1.2 Secure

The Secure bit is set to ONE in a secure frame, which is protected using the temporal key specified by the Temporal Key Identifier (TKID). The Secure bit is set to ZERO otherwise. Frames with the Secure bit set to ONE use the Frame Payload format for secure frames as defined in Figure 37. Valid settings for the Secure bit in each frame type are listed in Table 131 in 18.2.

#### 16.2.1.3 ACK policy

The ACK Policy field is set to the type of acknowledgement requested by the transmitter. Acknowledgement procedures are described in 17.8. The allowed values for the ACK Policy field are defined in Table 105.



Copyright International Organization for Standardization
Provided by IHS under license with ISO
No reproduction or networking permitted without license from IHS
Not for Resale

Table 105 - ACK Policy field encoding

| Value | ACK policy type | Description |
|---|---|---|
| 0 | No-ACK | The recipient(s) do not acknowledge the transmission, and the sender treats the transmission as successful without regard for the actual result. The use of this policy is defined in 17.8.1. |
| 1 | Imm-ACK | The addressed recipient returns an Imm-ACK frame after correct reception, according to the procedures defined in 17.8.2. |
| 2 | B-ACK | The addressed recipient keeps track of the frames received with this policy until requested to respond with a B-ACK frame, according to the procedures defined in 17.8.3. |
| 3 | B-ACK Request | The addressed recipient returns a B-ACK frame after reception, according to the procedures defined in 17.8.3. |

#### 16.2.1.4 Frame type

The Frame Type field is set to the type of frame that is being sent. Table 106 lists the valid frame type values, descriptions, and the Clauses that describe the format and use of each of the individual frame types.

Table 106 - Frame type field encoding

| Value | Frame type | Clause |
|---|---|---|
| 0 | Beacon frame | 16.3 |
| 1 | Control frame | 16.4 |
| 2 | Command frame | 16.5 |
| 3 | Data frame | 16.6 |
| 4 | Aggregated data frame | 16.7 |
| 5 - 7 | Reserved | |

#### 16.2.1.5 Frame subtype / delivery ID

The Frame Subtype / Delivery ID field is used to assist a receiver in the proper processing of received frames. In control or command frames, this field is used as Frame Subtype, as defined in Table 110 in 16.4 and Table 112 in 16.5. In data frames and aggregated data frames, this field is used as Delivery ID as defined in Table 107.

Table 107 - Delivery ID encoding in Frame Control

| b12 | b11-b9 |
|---|---|
| 0 | User Priority |
| 1 | Stream Index |

This field is reserved in all other frame types.

DRAFT



Copyright International Organization for Standardization
Provided by IHS under license with ISO
No reproduction or networking permitted without license from IHS
Not for Resale

#### 16.2.1.6 Retry

The Retry bit is set to ONE in any data, aggregated data, or command frame that is a retransmission of an earlier frame. It is reserved in all other frame types.

### 16.2.2 DestAddr

The DestAddr field is set to the DevAddr of the intended recipient(s) of the frame. The DevAddr specifies a single device for a unicast frame, a group of devices for a multicast frame, or all devices for a broadcast frame. DevAddr values are described in 17.1.1.

### 16.2.3 SrcAddr

The SrcAddr field is set to the DevAddr of the transmitter of the frame.

### 16.2.4 Sequence control

The Sequence Control field identifies the order of MSDUs/MCDUs and their fragments. The Sequence Control field is defined in Figure 39. The Sequence Control field is reserved in control frames.

| bits: b15 | b14 | b13-b3 | b2-b0 |
|---|---|---|---|
| Reserved | More Fragments | Sequence Number | Fragment Number |

*Figure 39 - Sequence Control field format*

#### 16.2.4.1 Fragment number

The Fragment Number field is set to the number of the fragment within the MSDU or MCDU. The fragment number is zero in the first or only fragment of an MSDU or MCDU and is incremented by one for each successive fragment of that MSDU or MCDU.

#### 16.2.4.2 Sequence number

The Sequence Number field is set to the sequence number of the MSDU or MCDU, as defined in 17.1.9.3.

The Sequence Number field is used for duplicate frame detection, as described in 17.1.7, and to preserve frame order when using the B-ACK mechanism, as described in 17.8.3.

The Sequence Number field is reserved in control frames.

#### 16.2.4.3 More fragments

The More Fragments field is set to ZERO to indicate that the current fragment is the sole or final fragment of the current MSDU or MCDU; otherwise the field is set to ONE.

### 16.2.5 Access information

The Access Information field is defined in Figure 40.

| bits: b15 | b14 | b13-b0 |
|---|---|---|
| Access Method | More Frames | Duration |

*Figure 40 - Access Information field format*

#### 16.2.5.1 Duration

The Duration field is 14 bits in length and is set to an expected medium busy interval after the end of the PLCP header of the current frame in units of microseconds. The



Copyright International Organization for Standardization
Provided by IHS under license with ISO
No reproduction or networking permitted without license from IHS
Not for Resale

duration value is set as defined in 17.1.9.1 and used to update the network allocation vector (NAV) according to the procedures defined in 17.3.2.

#### 16.2.5.2 More frames

In frames sent with the Access Method bit set to ONE, the More Frames bit is set to ZERO if the transmitter will not send further frames to the same recipient during the current reservation block; otherwise it is set to ONE.

In frames sent with the Access Method bit set to ZERO, the More Frames bit is set to ZERO if the transmitter will not send further frames to the same recipient during the current superframe; otherwise it is set to ONE.

The More Frames bit is reserved in beacon and control frames. Additional rules regarding the More Frames field are specified in 17.1.9.2.

#### 16.2.5.3 Access method

The Access Method bit is set to ONE in all frames transmitted within a hard or private DRP reservation block by the reservation owner or target prior to the release of the reservation block, including the UDA and UDR control frames that release the reservation block.

The Access Method bit may be set to ONE in frames transmitted within a Soft DRP reservation block without backoff by the reservation owner.

The Access Method bit in an Imm-ACK, B-ACK or CTS control frame is set to the same value as the Access Method bit in the corresponding received frame.

The Access Method bit is set to ZERO in frames transmitted at all other times, other than in beacon frames.

The Access Method bit is reserved in beacon frames.

### 16.2.6 Frame payload

The Frame Payload field is a variable length field that carries the information that is to be transferred to a device or group of devices. In a secure frame, it includes the required security fields as defined in Figure 37 and defined below.

#### 16.2.6.1 Temporal key identifier (TKID)

The TKID field is an identifier for the temporal key used to protect the frame. The TKID uniquely identifies this key from any other temporal keys held by the sender and the recipient(s) of the frame. It does not need to uniquely identify the key for devices not holding the key.

#### 16.2.6.2 Security reserved

The Security Reserved field is reserved, but included in authentication of the frame.

#### 16.2.6.3 Encryption offset (EO)

The Encryption Offset field indicates where encryption starts, in octets, relative to the beginning of the Secure Payload, as defined in Figure 37. A value of zero indicates that the entire Secure Payload is encrypted. A non-zero value in this field indicates that the first EO octets of the Security Payload are not encrypted. Regardless of the value of this field, the entire Secure Payload, along with other appropriate fields, is authenticated by the MIC.

#### 16.2.6.4 Secure frame number (SFN)

The SFN field provides message freshness as a defence against replay attacks. The SFN field in a secure frame is set to the next value of the sender's secure frame counter (SFC) for the temporal key used by this frame. SFC setting and replay protection are described in 18.4.2.



Copyright International Organization for Standardization
Provided by IHS under license with ISO
No reproduction or networking permitted without license from IHS
Not for Resale

#### 16.2.6.5 Secure payload

The Secure Payload field in secure frames is the counterpart of the Frame Payload field in non-secure frames. It contains the information specific to individual frame types and protected by the symmetric key identified in the TKID field of the same frame.

#### 16.2.6.6 Message integrity code (MIC)

The MIC field contains an 8-octet cryptographic checksum used to protect the integrity of the MAC Header and Frame Payload.

### 16.2.7 FCS

The FCS field contains a 32-bit value that represents a CRC polynomial of degree 31.

The CRC is calculated over a calculation field, which is the entire Frame Payload field for this specification. The calculation field is mapped to a message polynomial M(x) of degree k-1, where k is the number of bits in the calculation field. The least-significant bit of the first octet presented to the PHY SAP is the coefficient of the $x^{k-1}$ term, and the most-significant bit of the last octet transmitted is the coefficient of the $x^0$ term.

The CRC is calculated using the following Standard generator polynomial of degree 32:

$$G(x) = x^{32} + x^{26} + x^{23} + x^{22} + x^{16} + x^{12} + x^{11} + x^{10} + x^8 + x^7 + x^5 + x^4 + x^2 + x + 1$$

The CRC polynomial is the one's complement of the modulo 2 sum of the following remainders:

- The remainder resulting from $x^k \times (x^{31} + x^{30} + ... + x + 1)$ divided (modulo 2) by G(x).
- The remainder resulting from $x^{32} \times M(x)$, divided (modulo 2) by G(x).

The FCS field value is derived from the CRC polynomial such that the least-significant bit is the coefficient of the $x^{31}$ term and the most-significant bit is the coefficient of the $x^0$ term. Figure 41 defines the encoding of the FCS field for the CRC polynomial:

$$a_{31}x^{31} + a_{30}x^{30} + a_{29}x^{29} + ... + a_2x^2 + a_1x + a_0$$

| bits: b31 | b30 | b29 | ... | b2 | b1 | b0 |
|---|---|---|---|---|---|---|
| $a_0$ | $a_1$ | $a_2$ | ... | $a_{29}$ | $a_{30}$ | $a_{31}$ |

*Figure 41 - FCS field encoding*

In a common implementation, at the transmitter, the initial remainder of the division is preset to all ONEs and is then modified via division of the calculation field by the generator polynomial G(x). The one's complement of this remainder is the FCS field. At the receiver, the initial remainder is preset to all ONEs. The serial incoming bits of the calculation field and FCS, when divided by G(x) in the absence of transmission errors, results in a unique non-zero remainder value. The unique remainder value is the polynomial:

$$x^{31} + x^{30} + x^{26} + x^{25} + x^{24} + x^{18} + x^{15} + x^{14} + x^{12} + x^{11} + x^{10} + x^8 + x^6 + x^5 + x^4 + x^3 + x + 1$$

DRAFT



Copyright International Organization for Standardization
Provided by IHS under license with ISO
No reproduction or networking permitted without license from IHS
Not for Resale

## 16.3 Beacon frames

MAC Header field settings for beacon frames are described in Table 108. Beacon frames are also referred to as beacons throughout this specification.

Table 108 - MAC Header field values for beacon frames

| Header field | Value |
|---|---|
| Protocol Version | 0 |
| Secure | 0 |
| ACK Policy | 0 (No-ACK) |
| Frame Type | 0 (beacon frame) |
| Frame Subtype / Delivery ID | Reserved |
| Retry | Reserved |
| DestAddr | BcstAddr |
| SrcAddr | DevAddr of the transmitter |
| Sequence Control | As defined in 16.2.4 and 17.1.9.3 |
| Duration | As defined in 16.2.5.1 and 17.1.9.1 |
| More Frames | Reserved |
| Access Method | Reserved |

The beacon frame payload is defined in Figure 42.

| **octets: 8** | **$L_1$** | **…** | **$L_N$** |
|---|---|---|---|
| Beacon Parameters | Information Element 1 | … | Information Element N |

*Figure 42 - Payload format for Beacon frames*

The information elements (IEs) that may be included in a beacon frame are listed in Table 116 in 16.8. IEs are included in order of increasing Element ID, except for ASIEs. ASIEs do not appear prior to any IE with Element ID zero through seven, but may appear anywhere after those IEs. DRP IEs that have the same Target DevAddr and Stream Index are adjacent to each other in the beacon.

The Beacon Parameters field is defined in Figure 43.

| **octets: 6** | **1** | **1** |
|---|---|---|
| Device Identifier | Beacon Slot Number | Device Control |

*Figure 43 - Beacon Parameters field format*



Copyright International Organization for Standardization
Provided by IHS under license with ISO
No reproduction or networking permitted without license from IHS
Not for Resale

The Device Identifier field is set to the EUI-48 [H1] of the device sending the beacon. A device may use a NULL EUI-48 value (all bits set to ONE) to indicate it does not have a unique EUI-48 value.The EUI is a sequence of 6 octets, labelled as eui[0] through eui[5]. The first three octets (eui[0] through eui[2]) are the manufacturer's OUI, and the last three octets (eui[3] through eui[5]) are the manufacturer-selected extension identifier. Octets of the EUI are passed to the PHY SAP in ascending index-value order.

The Beacon Slot Number field is set to the number of the beacon slot where the beacon is sent within the beacon period (BP), in the range of [0, mMaxBPLength-1], except in beacons sent in signaling slots. In signaling slots it is set to the number of the device's non-signaling beacon slot.

The Device Control field is defined in Figure 44.

| bits: b7-b6 | b5-b2 | b1 | b0 |
|---|---|---|---|
| Security Mode | Reserved | Signaling Slot | Movable |

*Figure 44 - Device Control field format*

The Movable bit is set to ONE if the beacon is movable according to 17.2.5, and is set to ZERO otherwise.

The Signaling Slot bit is set to ONE if the beacon is sent in a signaling beacon slot according to 17.2.3**,** and is set to ZERO otherwise.

The Security Mode field is set to the security mode at which the device is currently operating.

## 16.4 Control frames

Default MAC Header field settings for control frames are listed in Table 109. Specific MAC Header field settings and payload descriptions for each of the control frames are defined in the following Clauses.

Table 109 - MAC Header field values for control frames

| Header field | Value |
|---|---|
| Protocol Version | 0 |
| Secure | As defined in 16.2.1.2 |
| ACK Policy | 0 (No-ACK) |
| Frame Type | 1 (control frame) |
| Frame Subtype | Value from Table 110 |
| Retry | Reserved |
| DestAddr | DevAddr of the recipient |
| SrcAddr | DevAddr of the transmitter |
| Sequence Control | Reserved |
| Duration | As described in 16.2.5.1 and 17.1.9.1 |
| More Frames | Reserved |
| Access Method | As described in 16.2.5.3 |

DRAFT 2009



Copyright International Organization for Standardization
Provided by IHS under license with ISO
No reproduction or networking permitted without license from IHS
Not for Resale

Table 110 lists valid values for the Frame Subtype field for control frames.

Table 110 - Frame Subtype field encoding for control frames

| Value | Control frame subtype | Description |
|---|---|---|
| 0 | Imm-ACK | Acknowledges correct receipt of the previously-received frame |
| 1 | B-ACK | Acknowledges correct or incorrect receipt of one or more preceding frames |
| 2 | RTS | Announces to a recipient device that a frame is ready for transmission and requests confirmation of ability to receive |
| 3 | CTS | Responds to an RTS control frame that the recipient is able to receive |
| 4 | UDA | Announces to neighbours of the transmitting device that the remainder of a reservation block it owns is available for use by other devices via PCA |
| 5 | UDR | Announces to neighbours of the transmitting device that the remainder of a reservation block of which it is the target is available for use by other devices via PCA |
| 6 - 13 | Reserved | Reserved |
| 14 | Application-specific | At discretion of application owner |
| 15 | Reserved | Reserved |

### 16.4.1 Immediate acknowledgement (Imm-ACK)

In Imm-ACK frames, the DestAddr field is set to the SrcAddr of the received frame that is acknowledged. Imm-ACK frames have no frame payload.

### 16.4.2 Block acknowledgement (B-ACK)

In B-ACK frames, the DestAddr field is set to the SrcAddr of the frame that requested the B-ACK.

The B-ACK frame acknowledges correct or incorrect receipt of the previous sequence of frames and provides information for the transmission of the next sequence of frames as described in 17.8.3. The B-ACK frame payload is defined in Figure 45.

| **octets: 2** | **1** | **1** | **2** | **0-n** |
|---|---|---|---|---|
| Buffer Size | Frame Count | Reserved | Sequence Control | Frame Bitmap |

*Figure 45 - Payload format for B-ACK frames*

The Buffer Size field specifies the maximum number of octets in the sum of the frame payloads of all frames in the next B-ACK sequence.

The Frame Count field specifies the maximum number of frames in the next B-ACK sequence.



Copyright International Organization for Standardization
Provided by IHS under license with ISO
No reproduction or networking permitted without license from IHS
Not for Resale

The Sequence Control and Frame Bitmap fields together specify an acknowledgement window of MSDU fragments and their reception status. The Sequence Control field specifies the Sequence Number and Fragment Number that start the acknowledgement window.

| bits: b15-14 | b13-b3 | b2-b0 |
|---|---|---|
| Reserved | Sequence Number | Fragment Number |

*Figure 46 - Sequence Control field format*

The Frame Bitmap field varies in length. A zero-length Frame Bitmap field indicates an acknowledgement window of length zero. Otherwise, the least-significant octet of the Frame Bitmap field corresponds to the MSDU indicated by the Sequence Control field, and each bit of the octet corresponds to a fragment of that MSDU. The least-significant bit in each octet corresponds to the first fragment and successive bits correspond to successive fragments. Successive octets present in the Frame Bitmap field correspond to successive MSDUs, and each bit corresponds to a fragment of the MSDU. The acknowledgement window ends at fragment seven of the MSDU that corresponds to the most-significant octet in the Frame Bitmap.

For all bits within the Frame Bitmap, a value of ONE indicates that the corresponding fragment was received in either the current sequence or an earlier one. A value of ZERO indicates that the corresponding fragment was not received in the current sequence (although it may have been received in an earlier one). Bits of the least-significant octet of the Frame Bitmap field corresponding to fragments prior to the start of the acknowledgement window are undefined. Frames with a Sequence Number earlier than the Sequence Number indicated in the Sequence Control field were not received in the last B-ACK sequence. Such frames were previously received or are no longer expected.

### 16.4.3 Request to send (RTS)

In RTS frames, the DestAddr field is set to the DevAddr of the device to receive the following frame from the transmitter. RTS frames have no frame payload.

### 16.4.4 Clear to send (CTS)

In CTS frames, the DestAddr field is set to the SrcAddr of the received RTS frame. CTS frames have no frame payload.

### 16.4.5 Unused DRP reservation announcement (UDA)

The UDA frame is used to explicitly release the remaining time of the current Hard or Private DRP reservation block. The DestAddr field is set to BcstAddr.

The UDA frame payload includes a list of DevAddrs of the devices that will respond with a UDR frame, as defined in Figure 47.

| octets: 2 | … | 2 |
|---|---|---|
| DevAddr 1 | … | DevAddr N |

*Figure 47 - Payload format for UDA frames*

DRAFT ECMA-369



Copyright International Organization for Standardization
Provided by IHS under license with ISO
No reproduction or networking permitted without license from IHS
Not for Resale

### 16.4.6 Unused DRP reservation response (UDR)

The UDR frame is used to respond to UDA frames to explicitly release the remaining time of the current Hard or Private DRP reservation block. The DestAddr field is set to the SrcAddr of the received UDA frame. UDR frames have no frame payload.

### 16.4.7 Application-specific

The payload format for Application-specific control frames is defined in Figure 48.

| octets: 2 | ... |
|---|---|
| Specifier ID | Data |

*Figure 48 - Payload format for Application-specific control frames*

The Specifier ID field is set to a 16-bit value that identifies a company or organization. See Annex C. The owner of the Specifier ID defines the format and use of the Data field.

## 16.5 Command frames

Default MAC Header settings for command frames are defined in Table 111.

Table 111 - Default MAC Header field values for command frames

| Header field | Value |
|---|---|
| Protocol Version | 0 |
| Secure | As defined in 16.2.1.2 |
| ACK Policy | 0 (No-ACK) or 1 (Imm-ACK) |
| Frame Type | 2 (command frame) |
| Frame Subtype | Value from Table 112 |
| Retry | As defined in 16.2.1.6 |
| DestAddr | DevAddr of the recipient |
| SrcAddr | DevAddr of the transmitter |
| Sequence Control | As defined in 16.2.4 |
| Duration | As defined in 16.2.5.1 and 17.1.9.1 |
| More Frames | As defined in 16.2.5.2 |
| Access Method | As defined in 16.2.5.3 |

DRAFT 2009



Copyright International Organization for Standardization
Provided by IHS under license with ISO
No reproduction or networking permitted without license from IHS
Not for Resale

Table 112 contains a list of valid values for the Frame Subtype field for command frames.

Table 112 - Frame Subtype field encoding for Command frames

| Value | Command frame subtype | Description |
|---|---|---|
| 0 | DRP Reservation Request | Used to request creation or modification of a DRP reservation |
| 1 | DRP Reservation Response | Used to respond to a DRP reservation request command |
| 2 | Probe | Used to request for, or respond with, information elements |
| 3 | Pair-wise Temporal Key (PTK) | Used to derive a PTK via a 4-way handshake between two devices |
| 4 | Group Temporal Key (GTK) | Used to solicit or distribute a GTK within a secure relationship |
| 5 | Range Measurement | Used to exchange timing information for range measurement |
| 6 - 13 | Reserved | Reserved |
| 14 | Application-specific | At discretion of application owner |
| 15 | Reserved | Reserved |

### 16.5.1 DRP reservation request

The DRP Reservation Request command frame is used to create or modify a DRP reservation. The DRP Reservation Request command frame payload is defined in Figure 49.

| **octets: $M_1$** | **$M_2$** | **…** | **$M_N$** |
|---|---|---|---|
| DRP IE-1 | DRP IE-2 | … | DRP IE-N |

*Figure 49 - Payload format for DRP Reservation Request command frames*

Each DRP IE field included in the command frame corresponds to a reservation request identified by the Target/Owner DevAddr, Stream Index, and Reservation Type in the IE. The DRP IE is defined in 16.8.6.

DRAFT



Copyright International Organization for Standardization
Provided by IHS under license with ISO
No reproduction or networking permitted without license from IHS
Not for Resale

### 16.5.2 DRP reservation response

The DRP Reservation Response command frame is used to respond to a DRP Reservation Request command frame. The DRP Reservation Response command frame payload is defined in Figure 50.

| octets: $M_1$ | $M_2$ | … | $M_N$ | 2 to 34 |
|---|---|---|---|---|
| DRP IE-1 | DRP IE-2 | … | DRP IE-N | DRP Availability IE |

*Figure 50 - Payload format for DRP Reservation Response command frames*

The DRP Reservation Response command frame includes all the DRP IEs from the reservation request. The DRP Availability IE is included according to the rules defined in 17.4.

### 16.5.3 Probe

The Probe command frame is used to request information from a device or respond to a Probe request. The payload format is defined in Figure 51.

| Octets: $M_1$ | $M_2$ | … | $M_N$ |
|---|---|---|---|
| Information Element 1 | Information Element 2 | … | Information Element N |

*Figure 51 - Payload format for Probe command frames*

If the payload includes a Probe IE, the command requests information from the recipient. Each Information Element field contains one information element.

### 16.5.4 Pairwise temporal key (PTK)

The PTK command frame is used in a 4-way handshake by a pair of devices, as described in 18.3.1, to authenticate each other and to derive a shared symmetric PTK for securing certain unicast traffic between the two devices. The PTK command frame is defined in Figure 52.

| octets: 1 | 1 | 3 | 11 | 16 | 16 | 8 |
|---|---|---|---|---|---|---|
| Message Number | Status Code | PTKID | Reserved | MKID | I-Nonce / R-Nonce | PTK MIC |

*Figure 52 - Payload format for PTK command frames*

The Message Number is set to 1, 2, 3, or 4, respectively, in the PTK command containing the first, second, third, or fourth message of the 4-way handshake. The other values of this field are reserved.

DRAFT 2009



Copyright International Organization for Standardization
Provided by IHS under license with ISO
No reproduction or networking permitted without license from IHS
Not for Resale

The Status Code in a PTK command indicates the current status of the 4-way handshake at the device sending this command. It is encoded as defined in Table 113.

Table 113 - Status Code field encoding in PTK commands

| Value | Meaning |
|---|---|
| 0 | Normal-the 4-way handshake proceeds |
| 1 | Aborted-the 4-way handshake is aborted per security policy |
| 2 | Aborted-the 4-way handshake is aborted in order to yield to a concurrent 4-way handshake using the same master key |
| 3 | PTKID not accepted-it is the TKID of a PTK or GTK being possessed by this device |
| 4 - 255 | Reserved |

The PTKID is set to a non-zero number as the TKID of the PTK to be derived from this 4-way handshake procedure. The initiator of the 4-way handshake chooses this value after determining that this value is different from the TKID of the PTK, if any, that is to be replaced by the new PTK, and the TKID of any PTK or GTK it currently possesses.

The MKID identifies the master key used in this 4-way handshake as described in 18.3.1.

The I-Nonce/R-Nonce is a random number generated by the initiator or responder for this 4-way handshake. This field is set to I-Nonce, the random number generated by the initiator in the command containing a Message Number of 1 or 3, and is set to R-Nonce, the random number generated by the responder in the command containing a Message Number of 2 or 4.

The PTK MIC in the PTK command containing a Message Number of 1 is set to zero on transmission and is ignored on reception.

The PTK MIC in the PTK command containing a Message Number of 2, 3, or 4 is set to the MIC that protects the fields in the payload of this command using the KCK generated from the first two messages of the 4-way handshake as specified in 18.3.1.

The MAC Header for the PTK command frame is set as indicated in Table 111, with the ACK Policy set to Imm-ACK.

### 16.5.5 Group temporal key (GTK)

The GTK command frame is used to solicit or distribute a GTK following a PTK update. The GTK is used to secure certain multicast traffic from a sending device to a group of recipient devices, and is chosen by the sending device. The GTK command frame is always in secure form, and the Secure Payload field is defined in Figure 53.

| octets: 1 | 1 | 3 | 3 | 2 | 6 | 16 |
|---|---|---|---|---|---|---|
| Message Number | Status Code | GTKID | Reserved | GroupAddr | GTK SFC | GTK |

*Figure 53 - Payload format for GTK command frames*



Copyright International Organization for Standardization
Provided by IHS under license with ISO
No reproduction or networking permitted without license from IHS
Not for Resale

The Message Number is set to 0 in the GTK command transmitted by a multicast recipient device to solicit a new GTK from a multicast sender. The Message Number is set to 1 in the GTK command transmitted by a multicast sender to distribute a new GTK to a multicast recipient. The Message Number is set to 2 in the GTK command transmitted by a multicast recipient device to respond to the distribution of a new GTK command.

The Status Code in a GTK command indicates the current status of the GTK solicitation or distribution at the device sending this command. It is encoded as defined in Table 114.

Table 114 - Status Code field encoding in GTK commands

| Value | Meaning |
|---|---|
| 0 | Normal-GTK solicitation or distribution proceeds |
| 1 | Rejected-GTK solicitation or distribution is rejected per security policy |
| 2 | GTKID not accepted-it is the TKID of a PTK or GTK being possessed by this device |
| 3 - 255 | Reserved |

The GTKID in the GTK command containing a Message Number of 0 is set to the TKID of the GTK being solicited. It is set to zero if the soliciting device does not know the TKID of the GTK it is soliciting.

The GTKID in the GTK command containing a Message Number of 1 is set to a non-zero number as the TKID of the GTK being distributed. The distributor chooses this value after determining that this value is different from the TKID of the GTK, if any, that is to be replaced by the new GTK, and the TKID of any PTK or GTK the distributor or recipient currently possesses.

The GTKID in the GTK command containing a Message Number of 2 is set to the GTKID in the last received GTK command containing a Message Number of 1.

The GroupAddr is set to the McstAddr or BcstAddr for which the GTK is being solicited or distributed. It is set to 0x0001 if the GTK is applied to all broadcast and multicast traffic from the device distributing this GTK.

The GTK SFC in the GTK command containing a Message Number of 0 is set to zero on transmission and ignored on reception.

The GTK SFC in the GTK command containing a Message Number of 1 is set to the current value of the secure frame counter set up for the GTK being distributed.

The GTK SFC in the GTK command containing a Message Number of 2 is set to the GTK SFC in the last received GTK command containing a Message Number of 1.

The GTK is the GTK distributed by the multicast sender for the McstAddr. In a GTK command soliciting a GTK, the GTK is set to zero prior to encryption.

The MAC Header for the GTK command frame is set as indicated in Table 111, with the ACK Policy set to Imm-ACK.

### 16.5.6 Range measurement

The Range measurement command frame payload is defined in Figure 54.



Copyright International Organization for Standardization
Provided by IHS under license with ISO
No reproduction or networking permitted without license from IHS
Not for Resale

| octets: 1 | N |
|---|---|
| Range Type | Range Payload |

*Figure 54 - Payload format for Range Measurement command frames*

The Range Payload field format definition depends on the Range Type as defined in Table 115.

Table 115 - Range Type field encoding

| Value | Range Payload |
|---|---|
| 0 | Range Measurement Request |
| 1 | Range Measurement |
| 2 | Range Measurement Report |
| 3 - 255 | Reserved |

The Range Payload field for Range Measurement Request type is defined in Figure 55.

| octets: 1 |
|---|
| Requested Measurement Number |

*Figure 55 - Range Payload field format for Range Measurement Request type*

The Requested Measurement Number field contains the number of consecutive two-way time transfer measurements.

The Range Payload field for Range Measurement type contains zero octets.

The Range Payload field for Range Measurement Report type is defined in Figure 56.

| octets: 1 | 1 | 1 | 4 | 4 | ... | 4 | 4 |
|---|---|---|---|---|---|---|---|
| Measurement Count | Range Supported | PHYClockAccuracy | $R1C_1$ | $T2C_1$ | … | $R1C_N$ | $T2C_N$ |

*Figure 56 - Range Payload field format for Range Measurement Report type*

The Measurement Count field indicates the number of measurements reported.

The Range Supported field is defined in Figure 57, and indicates range measurement support and range measurement precision. Bits are set to ONE to indicate support or to ZERO to indicate the feature is not supported.



Copyright International Organization for Standardization
Provided by IHS under license with ISO
No reproduction or networking permitted without license from IHS
Not for Resale

| bits: b7 | b6 | b5 | b4 | b3 | b2 | b1 | b0 |
|---|---|---|---|---|---|---|---|
| Reserved | 32-bit counter supported | 24-bit counter supported | 4 224 MHz sample precision | 2 112 MHz sample precision | 1 056 MHz sample precision | 528 MHz sample precision | Range measurements supported |

*Figure 57 - Range Supported field format*

PHYClockAccuracy indicates the accuracy of the PHY clock in units of ppm.

Each pair of R1C and T2C fields contains the range measurement reception timer and range measurement transmission timer value respectively.

### 16.5.7 Application-specific

The payload format for Application-specific command frames is defined in Figure 58.

| octets: 2 | … |
|---|---|
| Specifier ID | Data |

*Figure 58 - Payload format for Application-specific command frame*

The Specifier ID field is set to a 16-bit value that identifies a company or organization. See Annex C. The owner of the Specifier ID defines the format and use of the Data field.

## 16.6 Data frames

MAC Header and Frame Payload fields in data frames are set as described in 16.2.

## 16.7 Aggregated data frames

In aggregated data frames, the payload contains an Aggregation Header and multiple MSDUs, each aligned to a 4-octet boundary. The aggregated data frame payload is defined in Figure 59.

| octets: 2+(2×N) | 0 or 2 | $M_1$ | 0-3 | $M_2$ | 0-3 | … | $M_N$ |
|---|---|---|---|---|---|---|---|
| Aggregation Header | Pad to 4-octet boundary | MSDU 1 | Pad to 4-octet boundary | MSDU 2 | Pad to 4-octet boundary | … | MSDU N |

*Figure 59 - Payload format for aggregated data frames*

The Frame Payload size for aggregated data frames is subject to the same maximum size as any Frame Payload.

The Aggregation Header field is defined in Figure 60.

DRAFT 2.0



Copyright International Organization for Standardization
Provided by IHS under license with ISO
No reproduction or networking permitted without license from IHS
Not for Resale

| octets: 1 | 1 | 2 | ... | 2 |
|---|---|---|---|---|
| MSDU Count | Reserved | Length of MSDU 1 | … | Length of MSDU N |

*Figure 60 - Aggregation Header field format*

The MSDU Count field contains the number of MSDUs included in the aggregated frame.

The Length fields in the Aggregation Header field indicate the length in octets of the corresponding MSDUs. The lengths do not include the Pad octets.

## 16.8 Information elements

This Clause defines the information elements (IEs) that can appear in beacons and certain command frames.

The general format of all IEs is defined in Figure 61.

| octets: 1 | 1 | N |
|---|---|---|
| Element ID | Length (=N) | IE-specific fields |

*Figure 61 - General IE format*

The Element ID field is set to the value as listed in Table 116 that identifies the information element.

The Length field is set to the length, in octets, of the IE-specific fields that follow.

The IE-specific fields contain information specific to the IE.

Table 116 contains a list of IEs defined in this Standard.

Table 116 - Information elements

| Element ID | Information element | Description |
|---|---|---|
| 0 | Traffic Indication Map (TIM) IE | Indicates that a device has data buffered for transmission via PCA |
| 1 | Beacon Period Occupancy IE (BPOIE) | Provides information on neighbours' BP occupancy in the previous superframe |
| 2 | PCA Availability IE | Indicates the MASs that a device is available to receive PCA frames and transmit the required response |
| 3 - 7 | Reserved | Reserved |
| 8 | DRP Availability IE | Indicates a device's availability for new DRP reservations |
| 9 | Distributed Reservation Protocol (DRP) IE | Indicates a reservation with another device |
| 10 | Hibernation Mode IE | Indicates the device will go to hibernation mode for one or more superframes but intends to wake at a specified time in the future |



Copyright International Organization for Standardization
Provided by IHS under license with ISO
No reproduction or networking permitted without license from IHS
Not for Resale

Table 116 - Information elements (concluded)

| Element ID | Information element | Description |
|---|---|---|
| 11 | BP Switch IE | Indicates the device will change its BPST at a specified future time |
| 12 | MAC Capabilities IE | Indicates which MAC capabilities a device supports |
| 13 | PHY Capabilities IE | Indicates which PHY capabilities a device supports |
| 14 | Probe IE | Indicates a device is requesting one or more IEs from another device or/and responding with requested IEs |
| 15 | Application-specific Probe IE | Indicates a device is requesting an Application-specific IE from another device |
| 16 | Link Feedback IE | Provides data rate and power control feedback |
| 17 | Hibernation Anchor IE | Provides information on devices in hibernation mode |
| 18 | Channel Change IE | Indicates a device will change to another channel |
| 19 | Identification IE | Provides identifying information about the device, including a name string |
| 20 | Master Key Identifier (MKID) IE | Identifies some or all of the master keys held by the transmitting device |
| 21 | Relinquish Request IE | Indicates that a neighbour requests that a device release one or more MASs from its reservations |
| 22 | Multicast Address Binding (MAB) IE | Indicates an address binding between a multicast EUI-48 and a McstAddr |
| 23 | Tone-nulling IE | Announces tone-nulling information for DAA operation |
| 24 | Regulatory Domain IE | Announces regulatory domain information |
| 25 - 249 | Reserved | Reserved |
| 250 | WiMedia Logical Link Control Protocol IE | |
| 251 | WiMedia Platform Test IE | |
| 252 | Bluetooth Protocol IE | For use by Bluetooth protocols |
| 253 - 254 | Reserved | Reserved |
| 255 | Application-Specific IE (ASIE) | Use varies depending on the application |

DRAFT



Copyright International Organization for Standardization
Provided by IHS under license with ISO
No reproduction or networking permitted without license from IHS
Not for Resale

### 16.8.1 Application-specific IE (ASIE)

The ASIE is defined in Figure 62.

| octets: 1 | 1 | 2 | N |
|---|---|---|---|
| Element ID (=255) | Length (=2+N) | Specifier ID | Application-specific Data |

*Figure 62 - ASIE format*

The Specifier ID field is set to a 16-bit value that identifies a company or organization. See Annex C.

The owner of the Specifier ID defines the format and use of the Application-specific Data field.

### 16.8.2 Application-specific probe IE

The Application-specific Probe IE is used to request an application-specific IE from a device. It is defined in Figure 63.

| octets: 1 | 1 | 2 | 2 | N |
|---|---|---|---|---|
| Element ID (=15) | Length (=4+N) | Target DevAddr | Specifier ID | Application-specific Request Information |

*Figure 63 - Application-specific Probe IE format*

The Target DevAddr field is set to the DevAddr of the device from which an ASIE is requested.

The Specifier ID is set to a 16-bit value that identifies a company or organization. See Annex C.

The owner of the Specifier ID defines the format and use of the Application-specific Request Information field.

### 16.8.3 Beacon period occupancy IE (BPOIE)

The BPOIE provides information on the BP observed by the device sending the IE. The BPOIE is defined in Figure 64.

| octets: 1 | 1 | 1 | K | 2 | ... | 2 |
|---|---|---|---|---|---|---|
| Element ID (=1) | Length (=1+K+2×N) | BP Length | Beacon Slot Info Bitmap | DevAddr 1 | … | DevAddr N |

*Figure 64 - BPOIE format*

The BP Length field is set to the length of the BP, measured in beacon slots, as defined in 17.2.2.

The Beacon Slot Info Bitmap field consists of K octets of 2-bit elements to indicate the beacon slot occupancy and movability in the BP, where K = Ceiling (BP_Length/4). Each element n, numbered from 0 to 4×K-1, corresponds to beacon slot n and is encoded as



Copyright International Organization for Standardization
Provided by IHS under license with ISO
No reproduction or networking permitted without license from IHS
Not for Resale

defined in Table 117. Element zero is the least-significant two bits of the field. Unused elements, if any, are set to zero.

Table 117 - Beacon Slot Info Bitmap element encoding

| Element value | Beacon slot status | DevAddr encoding |
|---|---|---|
| 0 | Unoccupied (non-movable)<br>No PHY indication of medium activity was received in the corresponding beacon slot in the last superframe. | No DevAddr is included in the DevAddr fields for this beacon slot. |
| 1 | Occupied & non-movable<br>A beacon frame aligned to the device's BPST was received in the corresponding beacon slot in the last superframe, and the Movable bit in that beacon was set to ZERO, or a beacon frame was received in the corresponding beacon slot in a previous superframe that indicated a hibernation period that has not expired, as described in 17.13.4. | The corresponding DevAddr field is set to the SrcAddr in the MAC header of the received beacon frame, or is set to the DevAddr of the hibernating neighbor. |
| 2 | Occupied & movable<br>A PHY indication of medium activity was received in the corresponding beacon slot in the last superframe, but did not result in reception of a beacon frame aligned to the device's BPST. | If a beacon frame header was received within 2×mGuardTime of the beacon slot boundary, but the frame had an FCS error, the DevAddr field is set to the SrcAddr in the MAC header of the beacon frame. In all other cases, the DevAddr field is set to BcstAddr. |
| 3 | Occupied & movable<br>A beacon frame aligned to the device's BPST was received in the corresponding beacon slot in the last superframe, and the Movable bit in that beacon was set to ONE. | The corresponding DevAddr field is set to the SrcAddr in the MAC header of the received beacon frame. |

The DevAddr fields correspond to beacon slots encoded as occupied in the Beacon Slot Info Bitmap. They are included in ascending beacon slot order.

### 16.8.4 BP switch IE

The BP Switch IE indicates a device will change its BPST to align with an alien BP. It is defined in Figure 65.

| octets: 1 | 1 | 1 | 1 | 2 |
|---|---|---|---|---|
| Element ID (=11) | Length (= 4) | BP Move Countdown | Beacon Slot Offset | BPST Offset |

*Figure 65 - BP Switch IE format*

The BP Move Countdown field is set to the number of superframes after which the device will adjust its BPST. If BP Move Countdown is zero, the next beacon frame transmitted will be at the time specified by this IE.

The Beacon Slot Offset field is set to a positive number by which the device will adjust its beacon slot number when changing its BPST or is set to zero to indicate the device will join the alien BP using normal BP join rules.



Copyright International Organization for Standardization
Provided by IHS under license with ISO
No reproduction or networking permitted without license from IHS
Not for Resale

The BPST Offset field is set to the positive amount of time the device will delay its BPST, in microseconds.

### 16.8.5 Channel change IE

A Channel Change IE announces that a device is preparing to change to another channel.

The Channel Change IE is defined in Figure 66.

| octets: 1 | 1 | 1 | 1 |
|---|---|---|---|
| Element ID (=18) | Length (=2) | Channel Change Countdown | New Channel Number |

*Figure 66 - Channel Change IE format*

The Channel Change Countdown field is set to the number of superframes remaining until the device changes to the new channel. If this field is zero, the device will change to the new channel at the end of the current superframe.

The New Channel Number field is set to the channel number of the new channel to which the device will change.

### 16.8.6 Distributed reservation protocol (DRP) IE

A DRP IE is used to negotiate a reservation or part of a reservation for certain MASs and to announce the reserved MASs. The DRP IE is defined in Figure 67.

| octets: 1 | 1 | 2 | 2 | 4 | | 4 |
|---|---|---|---|---|---|---|
| Element ID (=9) | Length (=4+4×N) | DRP Control | Target/Owner DevAddr | DRP Allocation 1 | … | DRP Allocation N |

*Figure 67 - DRP IE format*

The DRP Control field is defined in Figure 68.

| bits: b15-b13 | b12 | b11 | b10 | b9 | b8-b6 | b5-b3 | b2-b0 |
|---|---|---|---|---|---|---|---|
| Reserved | Unsafe | Conflict Tie-breaker | Owner | Reservation Status | Reason Code | Stream Index | Reservation Type |

*Figure 68 - DRP Control field format*

DRAFT 2.0.9



Copyright International Organization for Standardization
Provided by IHS under license with ISO
No reproduction or networking permitted without license from IHS
Not for Resale

The Reservation Type field is set to the type of the reservation and is encoded as defined in Table 118.

Table 118 - Reservation Type field encoding

| Value | Reservation Type |
|---|---|
| 0 | Alien BP |
| 1 | Hard |
| 2 | Soft |
| 3 | Private |
| 4 | PCA |
| 5 - 7 | Reserved |

The Stream Index field identifies the stream of data to be sent in the reservation. This field is reserved if the Reservation Type is Alien BP or PCA.

The Reason Code is used by a reservation target to indicate whether a DRP reservation request was successful and is encoded as defined in Table 119. The Reason Code is set to zero in a DRP IE sent during negotiation by a reservation owner and by a device maintaining an established reservation. The Reason Code is set to Modified by a device if some of the MASs claimed in the reservation have been removed or if DRP IEs have been combined, split or both. The field is reserved if the Reservation Type is Alien BP or PCA.

Table 119 - Reason Code field encoding

| Value | Code | Meaning |
|---|---|---|
| 0 | Accepted | The DRP reservation request is granted |
| 1 | Conflict | The DRP reservation request or existing reservation is in conflict with one or more existing DRP reservations |
| 2 | Pending | The DRP reservation request is being processed |
| 3 | Denied | The DRP reservation request is rejected or existing DRP reservation can no longer be accepted |
| 4 | Modified | The DRP reservation is still maintained but has been reduced in size or multiple DRP IEs for the same reservation have been combined |
| 5 | Cancelled | The DRP reservation has been cancelled |
| 6 - 7 | Reserved | Reserved |

The Reservation Status bit indicates the status of the DRP negotiation process. The Reservation Status bit is set to ZERO in a DRP IE for a reservation that is under negotiation or in conflict. It is set to ONE by a device granting or maintaining a reservation, which is then referred to as an established reservation.

The Owner bit is set to ONE if the device transmitting the DRP IE is the reservation owner, or to ZERO if the device transmitting the DRP IE is a reservation target. The bit is reserved if the Reservation Type is Alien BP.



Copyright International Organization for Standardization
Provided by IHS under license with ISO
No reproduction or networking permitted without license from IHS
Not for Resale

The Conflict Tie-breaker bit is set to a random value of ZERO or ONE when a reservation request is made. The same value selected is used as long as the reservation is in effect. For all DRP IEs that represent the same reservation, the Conflict Tie-breaker bit is set to the same value.

The Target/Owner DevAddr field is set to the DevAddr of the reservation target if the device transmitting this DRP IE is the reservation owner. The reservation target may be a unicast or multicast DevAddr. The field is set to the DevAddr of the reservation owner if the device transmitting the DRP IE is a reservation target. The field is reserved if the Reservation Type is Alien BP or PCA.

The Unsafe bit is set to ONE if any of the MASs identified in the DRP Allocation fields is considered in excess of reservation limits.

A DRP IE contains one or more DRP Allocation fields. Each DRP Allocation field is encoded using a zone structure. The superframe is split into 16 zones numbered from 0 to 15 starting from the BPST. Each zone contains 16 consecutive MASs, which are numbered from 0 to 15 within the zone.

The format of a DRP Allocation field is defined in Figure 69.

| octets: 2 | 2 |
|---|---|
| Zone Bitmap | MAS Bitmap |

*Figure 69 - DRP Allocation field format*

The Zone Bitmap field identifies the zones that contain reserved MASs. If a bit in the field is set to ONE, the corresponding zone contains reserved MASs, where bit zero corresponds to zone zero.

The MAS Bitmap specifies which MASs in the zones identified by the Zone Bitmap field are part of the reservation. If a bit in the field is set to ONE, the corresponding MAS within each zone identified by the Zone Bitmap is included in the reservation, where bit zero corresponds to MAS zero within the zone.

### 16.8.7 DRP availability IE

The DRP Availability IE is used by a device to indicate its view of the current utilization of MASs. The DRP Availability IE is defined in Figure 70.

| octets: 1 | 1 | N (0 to 32) |
|---|---|---|
| Element ID (=8) | Length (=N) | DRP Availability Bitmap |

*Figure 70 - DRP Availability IE format*

The DRP Availability Bitmap field is up to 256 bits long, one bit for each MAS in the superframe, where the least-significant bit of the field corresponds to the first MAS in the superframe and successive bits correspond to successive MASs. Each bit is set to ONE if the device is available for a DRP reservation in the corresponding MAS, or is set to ZERO otherwise. If the DRP Availability Bitmap field is smaller than 32 octets, the bits in octets not included at the end of the bitmap are treated as ZERO.

### 16.8.8 Hibernation anchor IE

The Hibernation Anchor IE is defined in Figure 71.



Copyright International Organization for Standardization
Provided by IHS under license with ISO
No reproduction or networking permitted without license from IHS
Not for Resale

| octets: 1 | 1 | 3 | ... | 3 |
|---|---|---|---|---|
| Element ID (=17) | Length (=3×N) | Hibernation Mode Device Information 1 | ... | Hibernation Mode Device Information N |

*Figure 71 - Hibernation Anchor IE format*

The Hibernation Mode Device Information field is defined in Figure 72.

| octets: 2 | 1 |
|---|---|
| Hibernation Mode Neighbour DevAddr | Wakeup Countdown |

*Figure 72 - Hibernation Mode Device Information field format*

The Hibernation Mode Neighbour DevAddr field is set to the DevAddr of the neighbour in hibernation mode.

The Wakeup Countdown field is set to the number of remaining superframes before the device in hibernation mode is expected to wake up. A value of zero indicates that the device is scheduled to be in active mode in the next superframe.

### 16.8.9 Hibernation mode IE

The Hibernation Mode IE is defined in Figure 73.

| octets: 1 | 1 | 1 | 1 |
|---|---|---|---|
| Element ID (=10) | Length (=2) | Hibernation Countdown | Hibernation Duration |

*Figure 73 - Hibernation Mode IE format*

The Hibernation Countdown field is set to the number of superframes remaining until the device begins hibernation. A value of zero indicates that the device will enter hibernation mode at the end of the current superframe.

The Hibernation Duration field is set to the number of superframes for which the device intends to hibernate.

### 16.8.10 Identification IE

The Identification IE provides identifying information about the device, including a name string. The Identification IE is defined in Figure 74.

DRAFT 2009



Copyright International Organization for Standardization
Provided by IHS under license with ISO
No reproduction or networking permitted without license from IHS
Not for Resale

| octets:1 | 1 | $M_1$ | ... | $M_N$ |
|---|---|---|---|---|
| Element ID (=19) | Length (=$M_1$+…+ $M_N$) | Device Information 1 | … | Device Information N |

*Figure 74 - Identification IE format*

The general format of the Device Information field is defined in Figure 75.

| octets: 1 | 1 | N |
|---|---|---|
| Device Information Type | Device Information Length (=N) | Device Information Data |

*Figure 75 - Device Information field format*

The encoding for the Device Information Type field is defined in Table 120.

Table 120 - Device Information Type field encoding

| Value | Device Information Data field contents |
|---|---|
| 0 | PHY ID |
| 1 | Vendor Type |
| 2 | Name String |
| 3 - 255 | Reserved |

The Device Information Length field indicates the length, in octets, of the Device Information Data Field that follows.

The Device Information Data field, if Device Information Type is PHY ID, is defined in Figure 76.

| octets: 3 |
|---|
| Vendor ID |

*Figure 76 - Device Information Data field format for PHY ID*

The PHY ID is set to an OUI that indicates the vendor of the device. The OUI is a sequence of 3 octets, labelled as oui[0] through oui[2]. Octets of the OUI are passed to the PHY SAP in ascending index-value order.

The Device Information Data field, if Device Information Type is Vendor Type, is defined in Figure 77.



Copyright International Organization for Standardization
Provided by IHS under license with ISO
No reproduction or networking permitted without license from IHS
Not for Resale

| octets: 3 | 3 |
|---|---|
| Vendor ID | Device Type ID |

*Figure 77 - Device Information Data field format for Vendor Type*

The PHY ID field is set to an OUI that indicates the entity that assigns the values used in the Device Type ID field. The Device Type ID field indicates the type of device.

The Device Information Data field, if Device Information Type is Name String, contains the name of the device encoded in Unicode UTF-16LE format, and is defined in Figure 78.

| octets: 2 | … | 2 |
|---|---|---|
| Name String Unicode Char 1 | … | Name String Unicode Char N |

*Figure 78 - Device Information Data field format for Name String*

### 16.8.11 Link feedback IE

The Link Feedback IE contains information on the recommended change to the data rate and transmit power level by a recipient device for one or more source devices. The Link Feedback IE is defined in Figure 79.

| octets: 1 | 1 | 3 | | 3 |
|---|---|---|---|---|
| Element ID (=16) | Length (=3xN) | Link 1 | … | Link N |

*Figure 79 - Link Feedback IE format*

The Link field is defined in Figure 80.

| bits: b23-b20 | b19-b16 | b15-b0 |
|---|---|---|
| Data Rate | Transmit Power Level Change | DevAddr |

*Figure 80 - Link field format*

The DevAddr field is set to the DevAddr of the source device for which the feedback is provided.

DRAFT 09



Copyright International Organization for Standardization
Provided by IHS under license with ISO
No reproduction or networking permitted without license from IHS
Not for Resale

The Transmit Power Level Change field is set to the change in transmit power level that the recipient recommends to the source device. The Transmit Power Level Change field encoding is defined in Table 121.

Table 121 - Transmit Power Level Change field encoding

| Value | Power level change |
|---|---|
| 1000 - 1101 | Reserved |
| 1110 | -2 |
| 1111 | -1 |
| 0000 | no change |
| 0001 | +1 |
| 0010 | +2 |
| 0011 - 0111 | Reserved |

The Data Rate field is set to the data rate that the recipient device recommends that the source device use. The Data Rate field is encoded as defined in Table 122.

Table 122 - Data Rate field encoding

| Value | Data Rate (Mbit/s) |
|---|---|
| 0 | 53,3 |
| 1 | 80 |
| 2 | 106,7 |
| 3 | 160 |
| 4 | 200 |
| 5 | 320 |
| 6 | 400 |
| 7 | 480 |
| 8 - 15 | Reserved |

### 16.8.12 MAC capabilities IE

The MAC Capabilities IE is defined in Figure 81.

| octets: 1 | 1 | 2 | X |
|---|---|---|---|
| Element ID (=12) | Length (=2+X) | MAC Capability Bitmap | Reserved |

*Figure 81 - MAC Capabilities IE format*

The MAC Capability Bitmap field indicates capabilities supported by the MAC entity. A bit is set to ONE if the corresponding attribute is supported, or is set to ZERO otherwise. This



Copyright International Organization for Standardization
Provided by IHS under license with ISO
No reproduction or networking permitted without license from IHS
Not for Resale

field is encoded as described in Table 123. Subsequent octets are reserved and may or may not be present.

Table 123 - MAC Capability Bitmap

| Octet | Bit | Attribute | Description |
|---|---|---|---|
| 0 | 0 | PCA | Capable of transmitting and receiving frames using the PCA mechanism |
| | 1 | Hard DRP | Capable of being the owner and target of Hard DRP reservations |
| | 2 | Soft DRP | Capable of being the owner and target of Soft DRP reservations |
| | 3 | Block ACK | Capable of transmitting and acknowledging frames using the B-ACK mechanism |
| | 4 | Explicit DRP negotiation | Capable of negotiating a DRP reservation using command frames |
| | 5 | Hibernation anchor | Capable of acting as a hibernation anchor |
| | 6 | Probe | Capable of responding to Probe IEs received in command frames |
| | 7 | Link feedback | Capable of generating and interpreting a Link Feedback IE |
| 1 | 0 | Range measurement | Capable of initiating and participating in range measurement calculations |
| | 1 - 7 | Reserved | Reserved |

### 16.8.13 Master key identifier (MKID) IE

The MKID IE is used to identify some or all of the master keys possessed by the device. The MKID IE is defined in Figure 82.

| **octets: 1** | **1** | **16** | **…** | **16** |
|---|---|---|---|---|
| Element ID (=20) | Length (=16×N) | MKID 1 | … | MKID N |

*Figure 82 - MKID IE format*

Each MKID field is set to the identifier of a master key possessed by the device.

### 16.8.14 Multicast address binding (MAB) IE

Each device maps multicast EUI-48s to McstAddrs in the 16-bit DevAddr address range. The MAB IE declares the binding between a multicast EUI-48 and the McstAddr that the device will use when transmitting frames destined for that multicast EUI-48.

DRAFT



Copyright International Organization for Standardization
Provided by IHS under license with ISO
No reproduction or networking permitted without license from IHS
Not for Resale

The format of the MAB IE is defined in Figure 83.

| octets: 1 | 1 | 8 | ... | 8 |
|---|---|---|---|---|
| Element ID (=22) | Length (=8×N) | Multicast Address Binding Block 1 | … | Multicast Address Binding Block N |

*Figure 83 - MAB IE format*

The format of the Multicast Address Binding Block field is defined in Figure 84.

| octets : 6 | 2 |
|---|---|
| MEUI | MDevAddr |

*Figure 84 - Multicast Address Binding Block format*

The MEUI field is set to the multicast EUI-48 supplied by the MAC client at the MAC SAP.

The MDevAddr field is set to the multicast DevAddr bound to the MEUI field by the MAC entity from the McstAddr address range.

### 16.8.15 PCA availability IE

The PCA Availability IE identifies the MASs in which a device will be available to receive PCA traffic and transmit the required response.

The PCA Availability IE is defined in Figure 85.

| octets: 1 | 1 | 1 | N (0 to 32) |
|---|---|---|---|
| Element ID (=2) | Length (=N+1) | Interpretation | PCA Availability Bitmap |

*Figure 85 - PCA Availability IE format*

The Interpretation field contains information that specifies the meaning of each bit in the PCA Availability Bitmap field. The Interpretation field is defined in Figure 86.

| bits: b7-b1 | b0 |
|---|---|
| Reserved | TIM IE Required |

*Figure 86 - Interpretation field format*

The TIM IE Required bit is set to ONE if the device will only be available to receive PCA traffic in the specified MASs after receiving a TIM IE that addresses it. The bit is set to ZERO if the device will be available to receive PCA traffic in the specified MASs regardless of TIM IE reception.

The PCA Availability Bitmap field is up to 256 bits long, one bit for each MAS in the superframe, where the least-significant bit of the field corresponds to the first MAS in the superframe and successive bits correspond to successive MASs. Each bit is set to ONE if



Copyright International Organization for Standardization
Provided by IHS under license with ISO
No reproduction or networking permitted without license from IHS
Not for Resale

the device is available to receive PCA traffic and transmit the required response in the corresponding MAS, or is set to ZERO otherwise. If the PCA Availability Bitmap field is smaller than 32 octets, the bits in octets not included at the end of the bitmap are treated as ZERO.

### 16.8.16 PHY capabilities IE

The PHY Capabilities IE pertaining to the PHY is defined in Figure 87.

| octets: 1 | 1 | 3 | X |
|---|---|---|---|
| Element ID (=13) | Length (=3+X) | PHY Capability Bitmap | Reserved |

*Figure 87 - PHY Capabilities IE format*

The PHY Capability Bitmap field indicates capabilities supported by the PHY, as defined in the Physical Layer Clauses of this specification (Clauses 7 - 15). A bit is set to ONE if the corresponding attribute is supported, or is set to ZERO otherwise. This field is encoded as described in Table 124. Subsequent octets are reserved and may or may not be present.

DRAFT 2009



Copyright International Organization for Standardization
Provided by IHS under license with ISO
No reproduction or networking permitted without license from IHS
Not for Resale

Table 124 - PHY Capability Bitmap

| Octet | Bit | Attribute | Description |
|---|---|---|---|
| 0 | 0 | Band group 1 TFI | Capable of transmitting and receiving frames using TFI channels in band group 1 |
| | 1 | Band group 1 FFI | Capable of transmitting and receiving frames using FFI channels in band group 1 |
| | 2 | Band group 2 TFI | Capable of transmitting and receiving frames using TFI channels in band group 2 |
| | 3 | Band group 2 FFI | Capable of transmitting and receiving frames using FFI channels in band group 2 |
| | 4 | Band group 3 TFI | Capable of transmitting and receiving frames using TFI channels in band group 3 |
| | 5 | Band group 3 FFI | Capable of transmitting and receiving frames using FFI channels in band group 3 |
| | 6 | Band group 4 TFI | Capable of transmitting and receiving frames using TFI channels in band group 4 |
| | 7 | Band group 4 FFI | Capable of transmitting and receiving frames using FFI channels in band group 4 |
| 1 | 0 | Band group 5 TFI | Capable of transmitting and receiving frames using TFI2 channel in band group 5 |
| | 1 | Band group 5 FFI | Capable of transmitting and receiving frames using FFI channels in band group 5 |
| | 2 | Band group 6 TFI | Capable of transmitting and receiving frames using TFI channels in band group 6 |
| | 3 | Band group 6 FFI | Capable of transmitting and receiving frames using FFI channels in band group 6 |
| | 4 - 6 | Reserved | Reserved |
| | 7 | TFI2 | Capable of transmitting and receiving frames using TFI2 channels in any band group for which TFI capability is indicated |
| 2 | 0 | 53,3 Mb/s | Capable of receiving frames using the 53,3 Mb/s PHY data rate |
| | 1 | 80 Mb/s | Capable of receiving frames using the 80 Mb/s PHY data rate |
| | 2 | 106,7 Mb/s | Capable of receiving frames using the 106,7 Mb/s PHY data rate |
| | 3 | 160 Mb/s | Capable of receiving frames using the 160 Mb/s PHY data rate |
| | 4 | 200 Mb/s | Capable of receiving frames using the 200 Mb/s PHY data rate |
| | 5 | 320 Mb/s | Capable of receiving frames using the 320 Mb/s PHY data rate |
| | 6 | 400 Mb/s | Capable of receiving frames using the 400 Mb/s PHY data rate |
| | 7 | 480 Mb/s | Capable of receiving frames using the 480 Mb/s PHY data rate |



Copyright International Organization for Standardization
Provided by IHS under license with ISO
No reproduction or networking permitted without license from IHS
Not for Resale

### 16.8.17 Probe IE

The Probe IE is used to request information from a device. It is defined in Figure 88.

| octets: 1 | 1 | 2 | 1 | ... | 1 |
|---|---|---|---|---|---|
| Element ID (=14) | Length (=2+N) | Target DevAddr | Requested Element ID 1 | ... | Requested Element ID N |

*Figure 88 - Probe IE format for standard IEs*

The Target DevAddr field is set to the DevAddr of the device from which IEs are requested or the device that requests IEs.

Each Requested Element ID field is set to the element ID of a requested IE.

### 16.8.18 Regulatory Domain IE

The Regulatory Domain IE is used to announce the operational regulatory domain and other information potentially relevant to regulatory requirements. It is defined in Figure 89.

| octets: 1 | 1 | 2 |
|---|---|---|
| Element ID (=24) | Length (=2) | Regulatory Domain Control |

*Figure 89 - Regulatory Domain IE format*

The Regulatory Domain Control field is defined in Figure 90.

| Bits : b15-b9 | b8-b7 | b6-b1 | b0 |
|---|---|---|---|
| Reserved | Mains Connection Status | Regulatory Domain Number | Location-aware |

*Figure 90 - Regulatory Domain Control field format*

The Location-aware bit is set to ONE if the transmitting device knows the device is located in the regulatory domain indicated in the Regulatory Domain Number field through external means. It is set to ZERO otherwise.

The Regulatory Domain Number field is set to a number indicating the regulatory domain. The numbers for regulator domains can be found in the Regulatory Domain Register. Use the link at *http://www.ecma-international.org/publications/standards/Ecma-368.htm* to view the Regulatory Domain Register.

The Mains Connection Status field indicates the minimum number of hops from the sending device to a device that is connected to a mains power source. It is set to zero by a device that is connected to a mains power source. If a device is not connected to a mains power source, it is set to one greater than the minimum value found in this field of a Regulatory Domain IE received from any neighbour, but not more than mMaxMainsHopCount. If a device is not connected to a mains power source and no Regulatory Domain IE is received from any neighbour, the field is set to mMaxMainsHopCount.



Copyright International Organization for Standardization
Provided by IHS under license with ISO
No reproduction or networking permitted without license from IHS
Not for Resale

### 16.8.19 Relinquish request IE

The Relinquish Request IE is used to request that a device release one or more MASs from one or more existing reservations. It identifies the target device and the desired MASs, and is defined in Figure 91.

| octets: 1 | 1 | 2 | 2 | 4 | | 4 |
|---|---|---|---|---|---|---|
| Element ID (=21) | Length (=4+4×N) | Relinquish Request Control | Target DevAddr | Allocation 1 | … | Allocation N |

*Figure 91 - Relinquish Request IE format*

The Relinquish Request Control field is defined in Figure 92.

| bits: b15-b4 | b3-b0 |
|---|---|
| Reserved | Reason Code |

*Figure 92 - Relinquish Request Control field format*

The Reason Code field indicates the reason for the request, and is encoded as defined in Table 125.

Table 125 - Reason Code field encoding

| Value | Code | Meaning |
|---|---|---|
| 0 | Non-specific | No reason specified |
| 1 | Over-allocation | The target device holds more MASs than permitted by policy |
| 2 - 15 | Reserved | Reserved |

The Target DevAddr field is set to the DevAddr of the device that is requested to release MASs.

A Relinquish Request IE contains one or more Allocation fields. Each Allocation field is encoded using a zone structure. The superframe is split into 16 zones numbered from 0 to 15 starting from the BPST. Each zone contains 16 consecutive MASs, which are numbered from 0 to 15 within the zone.

The general format of an Allocation field is defined in Figure 93.

| octets: 2 | 2 |
|---|---|
| Zone Bitmap | MAS Bitmap |

*Figure 93 - Allocation field format*

The Zone Bitmap field identifies the zones that contain requested MASs. If a bit in the field is set to ONE, the corresponding zone contains requested MASs, where bit zero corresponds to zone zero.



Copyright International Organization for Standardization
Provided by IHS under license with ISO
No reproduction or networking permitted without license from IHS
Not for Resale

The MAS Bitmap specifies which MASs in the zones identified by the Zone Bitmap field are part of the request. If a bit in the field is set to ONE, the corresponding MAS within each zone identified by the Zone Bitmap is included in the request, where bit zero corresponds to MAS zero within the zone.

### 16.8.20 Tone-nulling (TN) IE

The TN IE is used to announce which PHY tones are not used (nulled) when transmitting frames from this device and to request neighbour devices to null specific tones in frames they transmit. To null a tone, a device transmits with reduced energy on that tone. The TN IE is defined in Figure 94.

| octets: 1 | 1 | 2 | 2xN |
|---|---|---|---|
| Element ID (=23) | Length (=2+2xN) | TN Control | TN Map |

*Figure 94 - Tone-nulling IE format*

The TN Control field is defined in Figure 95.

| Bits : b15-b7 | b6 | b5-b4 | b3 | b2 | B1 | b0 |
|---|---|---|---|---|---|---|
| Reserved | Avoided Symmetric Tones | Avoided Adjacent Tones | Protected Tone Request | Avoided Tone Indication | Origin Indication | Co-located Radio Indication |

*Figure 95 - Tone-nulling Control field format*

The Co-located Radio Indication bit is set to ONE if the tone-nulling announcement is transmitted by a device with a co-located radio and the TN Map requests to null tones because of that radio, and is set to ZERO otherwise. A co-located radio is another radio in the same end product for which certain frequencies must be protected or avoided.

The Origin Indication bit is set to ONE if the transmitting device is the originator of the information in the TN IE, and is set to ZERO otherwise.

The Avoided Tone Indication bit is set to ONE if the transmitting device nulls the tones identified in the TN Map field in frames it transmits, and is set to ZERO otherwise.

The Protected Tone Request bit is set to ONE if the transmitting device is requesting its neighbors to null the tones identified in the TN Map field in frames they transmit, and is set to ZERO otherwise.

The Avoided Adjacent Tones field contains the number of tones adjacent to each side of each notch in the TN map field that are nulled by the transmitting device.

The PHY portion of this specification identifies certain tones to have associated symmetric tones. The Avoided Symmetric Tones bit is set to ONE to indicate that the transmitting device will also null tones symmetric to those indicated in the Tone-nulling Map field.

The Avoided Adjacent Tones field and Avoided Symmetric Tones bit permit a device to indicate that it nulls tones in frames it transmits in addition to those tones that it requests to be nulled by a neighbour.



Copyright International Organization for Standardization
Provided by IHS under license with ISO
No reproduction or networking permitted without license from IHS
Not for Resale

The TN Map field consists of one or more TN Map Segment fields identifying disjoint subsets of tones in the operational band group. The TN Map Segment fields of a TN Map field are ordered successively from the lowest-numbered to the highest-numbered TN elements identified in the TN Map Segment field. The format of each TN Map Segment field is defined in Figure 96.

| Bits : b15 | b14-b6 | b5-b0 |
|---|---|---|
| Reserved | Tone Offset | Tone Count |

*Figure 96 - TN Map Segment field format*

Each TN Map Segment field identifies a set of consecutively numbered TN elements. TN elements correspond to tones in the operational band group as defined and numbered in the Physical Layer Specification.

The Tone Count field is set to the number of TN elements identified by the TN Map Segment field.

The Tone Offset field is set to the smallest TN element number identified by the TN Map Segment field.

The set of TN elements identified by the TN Map Segment field consists of the TN elements identified by the Tone Offset field and the following (Tone Count - 1) consecutive higher-numbered TN elements.

### 16.8.21 Traffic indication map (TIM) IE

The TIM IE is used to indicate that an active mode device has data buffered for transmission via PCA. The TIM IE is defined in Figure 97.

| octets:1 | 1 | 2 | ... | 2 |
|---|---|---|---|---|
| Element ID (=0) | Length (=2×N) | DevAddr 1 | … | DevAddr N |

*Figure 97 - TIM IE format*

Each DevAddr field is set to a valid target DevAddr for which PCA traffic is buffered.

# 17 MAC sublayer functional description

This Clause specifies MAC sublayer functionality. The rules for transmission and reception of MAC frames, including setting and processing MAC header fields and information elements, are specified in 17.1.

Channel time is divided into superframes, with each superframe composed of two major parts, the beacon period (BP) and the data period. Beacon transmission and reception in the BP and merging of BPs are specified in 17.2

During the data period devices send and receive data using prioritized contention access (PCA) or in reservations established using the distributed reservation protocol (DRP). PCA permits multiple devices to contend for access to the medium based on traffic priority, and is specified in



Copyright International Organization for Standardization
Provided by IHS under license with ISO
No reproduction or networking permitted without license from IHS
Not for Resale

17.3. The DRP enables a device to gain scheduled access to the medium within a negotiated reservation, and is specified in 17.4.

Device synchronization is specified in 17.5. The fragmentation and reassembly of MSDUs is specified in 17.6. Aggregation of multiple MSDUs in a single frame is specified in 17.7. Acknowledgement mechanisms are specified in 17.8. Clauses 17.9 through 17.15 specify probe commands, dynamic channel selection, multi-rate support, transmit power control, power management mechanisms, use of ASIEs and range measurement. Clause 8.16 specifies values for all MAC sublayer parameters.

## 17.1 Frame processing

This Clause provides rules on preparing MAC frames for transmission and processing them on reception. The rules cover MAC header fields and information elements.

### 17.1.1 Frame addresses

Frames are addressed using DevAddrs. There are four types of DevAddrs: Private, Generated, Multicast, and Broadcast. Table 126 defined the range for each type of DevAddr.

Table 126 - DevAddr types and ranges

| Type | Range |
|---|---|
| Private | 0x0000 - 0x00FF |
| Generated | 0x0100 - 0xFEFF |
| Multicast (McstAddr) | 0xFF00 - 0xFFFE |
| Broadcast (BcstAddr) | 0xFFFF |

A device shall associate a Generated DevAddr with its local MAC sublayer and use that DevAddr in its beacon. A device shall select the a Generated DevAddr from the Generated DevAddr range at random with equal probability and should ensure that the generated value is unique among all devices in its extended beacon group.

Except in Private reservations, in all frames transmitted, a device shall set the SrcAddr field to its own DevAddr. In unicast frames, the DestAddr field shall be set to the DevAddr of the recipient. In multicast frames, the DestAddr field shall be set to an address from the Multicast DevAddr range, as specified in 17.1.10.14. In broadcast frames, the DestAddr field shall be set to the Broadcast DevAddr.

A device shall not transmit frames addressed with a Private DevAddr at any time outside a Private reservation.

#### 17.1.1.1 DevAddr conflicts

A device with a Generated DevAddr shall recognize that its DevAddr is in conflict if any of the following conditions occurs:

- It receives a frame header in which the SrcAddr is the same as its own DevAddr; or
- It receives a beacon frame in which the BPOIE contains a DevAddr that is the same as its own but does not correspond to a beacon slot in which the device transmitted a beacon in the last superframe, and does not correspond to a beacon slot in which the device transmitted a beacon containing a Hibernation Mode IE with a hibernation duration that has not yet expired.

DRAFT ISO



Copyright International Organization for Standardization
Provided by IHS under license with ISO
No reproduction or networking permitted without license from IHS
Not for Resale

A device that recognizes that its DevAddr is in conflict shall generate a new DevAddr to resolve the DevAddr conflict and use that DevAddr starting in its next transmitted beacon.

### 17.1.2 Frame reception

Unless otherwise indicated, a frame is considered to be received by the device if it has a valid header check sequence (HCS) and frame check sequence (FCS) as defined in 16.2.7 and indicates a protocol version that is supported by the device. The HCS is validated by the PHY, which indicates whether or not a header error occurred.

A frame header is considered to be received by the device if it has a valid HCS and indicates a protocol version supported by the device, regardless of the FCS validation.

### 17.1.3 Frame transaction

A frame transaction consists of an optional RTS/CTS frame exchange, a single frame, and the associated acknowledgement frame if requested by the ACK policy.

Figure 98 shows some frame transaction examples.

*NOTE*
*For the PHY, header errors are reported in the RXVECTOR parameter, as defined in Table 56.*

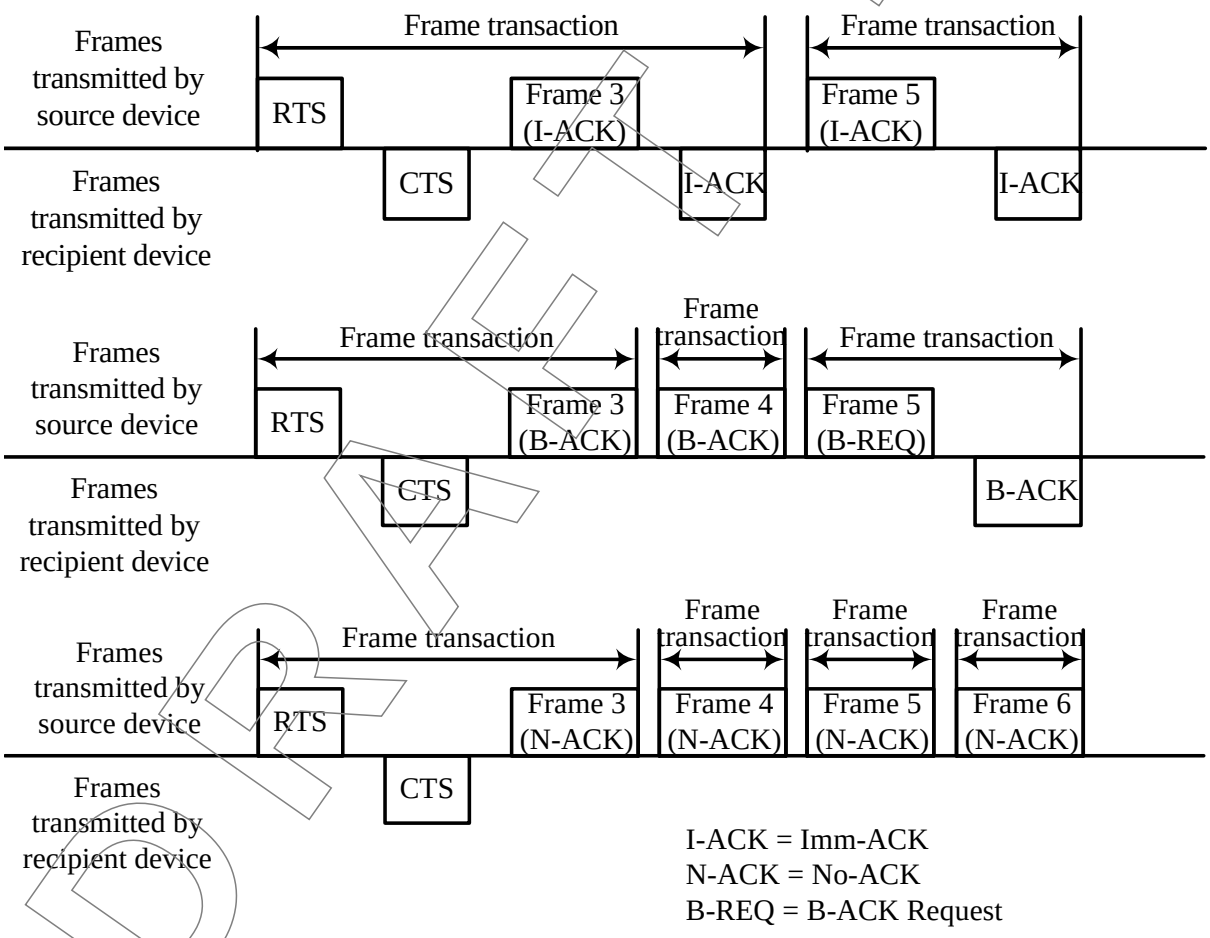


*Figure 98 - Frame transaction examples*



Copyright International Organization for Standardization
Provided by IHS under license with ISO
No reproduction or networking permitted without license from IHS
Not for Resale

### 17.1.4 Frame transfer

A source device shall transmit MSDUs associated with the same Delivery ID and addressed to the same destination EUI-48 in the order in which they arrived at the local MAC SAP. The device shall treat each MSDU of length n as a sequence of octets, labelled MSDU[0] to MSDU[n-1], and shall place these octets in the payload field in ascending index-value order. The device shall transmit fragments of an MSDU or MCDU in order of increasing fragment number.

The MAC entity shall translate the EUI-48 provided by the MAC client along with an MSDU to the DevAddr of the target for use in the transmission of the MSDU over the medium.

When using the B-ACK mechanism, a source device may retransmit some previously transmitted frames, causing the sequence numbers and fragment numbers of the retransmitted frames to be out of order with respect to previously transmitted frames.

A source device may reorder MSDUs for transmission if their associated Delivery IDs or destination EUI-48s are different.

A recipient device shall release MSDUs to the MAC client that were transmitted by the same source device with the same Delivery ID in order of increasing sequence number values.

A source device may fragment or aggregate MSDUs for transfer between peer MAC entities, but the recipient device shall deliver whole individual MSDUs through the MAC SAP to the MAC client.

### 17.1.5 Frame retry

A frame retry is a retransmission of a previously transmitted frame from the same source device to the same recipient device. In a frame that is retransmitted, the source device shall set the Retry bit to ONE.

Unless otherwise stated, in this specification "transmission" means transmission of a new frame or retransmission of a previously transmitted frame.

A device may retransmit a frame as needed, taking into consideration such factors as delay requirements, fairness policies, channel conditions, and medium availability. A device shall apply the medium access rules for new frame transmissions when retransmitting frames, unless stated otherwise.

### 17.1.6 Inter-frame space (IFS)

Three types of IFS are used in this Standard: the minimum inter-frame space (MIFS), the short inter-frame space (SIFS), and the arbitration inter-frame space (AIFS[i]). There are four values of AIFS depending on the access category of the traffic. The actual values of the MIFS, SIFS, and AIFS are PHY-dependent. The derivation of the values of AIFS[i] is described in 17.3.4.1.

A device shall not start transmission of a frame on the medium with non-zero length payload earlier than MIFS, or with zero length payload earlier than SIFS, after the end of a frame it transmitted previously on the medium. A device shall not start transmission of a frame on the medium earlier than SIFS duration after the end of a previously received frame on the medium.

#### 17.1.6.1 MIFS

Burst frame transmissions are those frames transmitted from the same device where the timing of each frame in the burst after the first is related to the preceding frame through use of the PHY burst mode. In this case a MIFS duration will occur between frames in the burst, as defined in Figure 99. All frames in a burst except the last frame shall be sent with the ACK Policy field set to No-ACK or B-ACK. The last frame in a burst may be sent with any ACK Policy.



Copyright International Organization for Standardization
Provided by IHS under license with ISO
No reproduction or networking permitted without license from IHS
Not for Resale

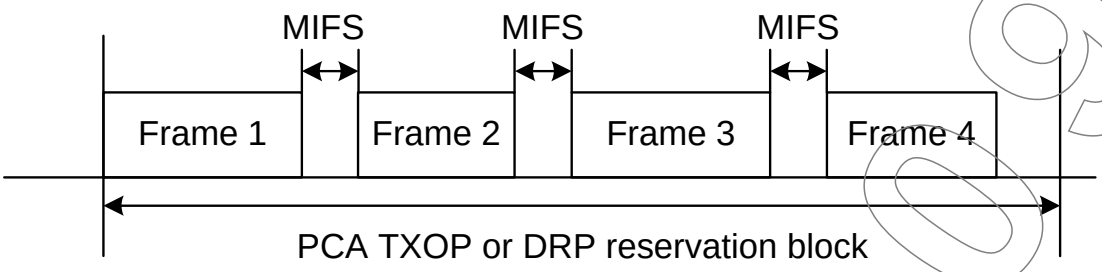


*Figure 99 - Use of MIFS*

Within a burst, the Duration field shall cover only consecutive frames addressed to the same destination. If the burst continues after the Duration is exhausted, the next frame shall use a Standard preamble. The length of MIFS is given by the pMIFS parameter defined in Table 130.

#### 17.1.6.2 SIFS

Within a frame transaction, all frames shall be separated by a SIFS interval.

The length of SIFS is given by the pSIFS parameter defined in Table 130.

#### 17.1.6.3 AIFS

The AIFS is the minimum time that a device using PCA defers access to the medium after it determines the medium to have become idle.

### 17.1.7 Duplicate detection

Because a device might not receive an Imm-ACK or B-ACK response for a frame it transmitted, it might send duplicate frames even though the intended recipient has already received and acknowledged the frame. A recipient device shall consider a received frame to be a duplicate if the Retry bit is set to ONE and the Sequence Control field has the same value as the previous frame received with the same SrcAddr, DestAddr, and Delivery ID field values. A recipient device shall not release a duplicate frame to the MAC client.

### 17.1.8 RTS/CTS use

An RTS/CTS exchange, when used, precedes data, aggregated data, or command frames to be transferred from a source device to a recipient device. Without a frame body, the RTS frame allows the source device to regain medium access relatively quickly in case of an unsuccessful transmission. With an appropriately set Duration field as specified in 17.1.9.1, the RTS and CTS frames prevent the neighbours of the source and recipient devices from accessing the medium while the source and recipient are exchanging the following frames.

A source device may transmit an RTS frame as part of one or more frame transactions with another device in an obtained PCA TXOP or an established reservation block. In a PCA TXOP, a device should transmit an RTS frame prior to transmitting a sequence of frames using the No-ACK acknowledgment policy or the B-ACK mechanism if those frame transmissions would otherwise not be covered by the Duration field contained in a frame transmitted previously between the same source and recipient devices.

If a reservation target receives an RTS frame addressed to it in a reservation block, from the reservation owner, it shall transmit a CTS frame pSIFS after the end of the received frame, regardless of its NAV setting. If a device receives an RTS frame addressed to it outside a reservation block, it shall transmit a CTS frame pSIFS after the end of the received frame if and only if its NAV is zero and the CTS frame transmission will be completed pSIFS before the start of the next BP or before the start of its own or a

--`,,```,,,,````-`-`,,`,,`,`,,`---



Copyright International Organization for Standardization
Provided by IHS under license with ISO
No reproduction or networking permitted without license from IHS
Not for Resale

neighbour's established reservation block. However, a device should not transmit a CTS frame if the Duration indicated in the RTS frame extends beyond a point in time pSIFS prior to the start of the next BP or the start of its own or a neighbour's established reservation block.

On receiving an expected CTS response, the source device shall transmit the frame, or the first of the frames, for which it transmitted the preceding RTS frame pSIFS after the end of the received CTS frame. If the source device does not receive the expected CTS frame pSIFS plus the CTS frame transmission time after the end of the RTS frame transmission, and it transmitted the RTS frame in a PCA TXOP, it shall invoke a backoff as specified in 17.3. If it transmitted the RTS frame in one of its reservation blocks, it shall not retransmit the RTS frame or transmit another frame earlier than pSIFS after the end of the expected CTS frame.

### 17.1.9 MAC header fields

#### 17.1.9.1 Duration

A device shall set the Duration field in beacon frames to one of the following:

- The time remaining in the BP measured from the end of the PLCP header of the beacon frame, as determined by the largest BP length announced by neighbours of the device in the previous superframe;
- The transmission time of the frame body of the beacon frame; or
- Zero.

A device shall set the Duration field in RTS, command, data, or aggregated data frames to the sum of:

- The transmission time of the frame body of the current frame;
- The transmission time of the expected response frame for the current frame (CTS, Imm-ACK, or B-ACK frame), if any;
- The transmission time of subsequent frames, if any, to be sent to the same recipient up to and including (a) the next RTS frame or frame with ACK Policy set to Imm-ACK or B-ACK Request or (b) the last frame in the PCA TXOP or reservation block, whichever is earlier; or, alternatively, the transmission time of the next frame in the PCA TXOP or reservation block to be sent to the same recipient, if any; and
- All the IFSs separating the frames included in the Duration calculation.

A device shall not set the Duration field in an RTS, command, data, or aggregated data frame to a value that extends beyond the end of its current TXOP or reservation block.

The calculated value for Duration has a required accuracy of +/- one microsecond per frame included in the calculation.

A device may estimate the transmission time of a B-ACK frame body based on the expected length and data rate, or may assume a zero-length frame body.

A device shall set the Duration field in CTS, Imm-ACK and B-ACK frames to the larger of zero or a value equal to the duration value contained in the previous frame minus pSIFS, minus the transmission time of the frame body of the received frame to which the CTS, Imm-ACK or B-ACK is responding, minus the transmission time up to the end of the PLCP header of this CTS, Imm-ACK or B-ACK frame.

The following exceptions to previous rules are allowed:

- For frames with ACK Policy set to B-ACK Request, a device may set the Duration to the sum of the transmission time of the frame body of the B-ACK Request frame plus a SIFS plus the estimated transmission time of the expected B-ACK response frame.

DRAFT 2009



Copyright International Organization for Standardization
Provided by IHS under license with ISO
No reproduction or networking permitted without license from IHS
Not for Resale

- A device may set the Duration for any frame sent in a Hard or Private reservation block other than UDA or UDR frames to zero.

A device shall set the Duration field in UDA and UDR frames to a time interval extending from the end of the PLCP header of the current frame to the time when the remaining DRP reservation block is to be released.

Examples of Duration field values are defined in Figure 100.

DRAFT 2009



Copyright International Organization for Standardization
Provided by IHS under license with ISO
No reproduction or networking permitted without license from IHS
Not for Resale

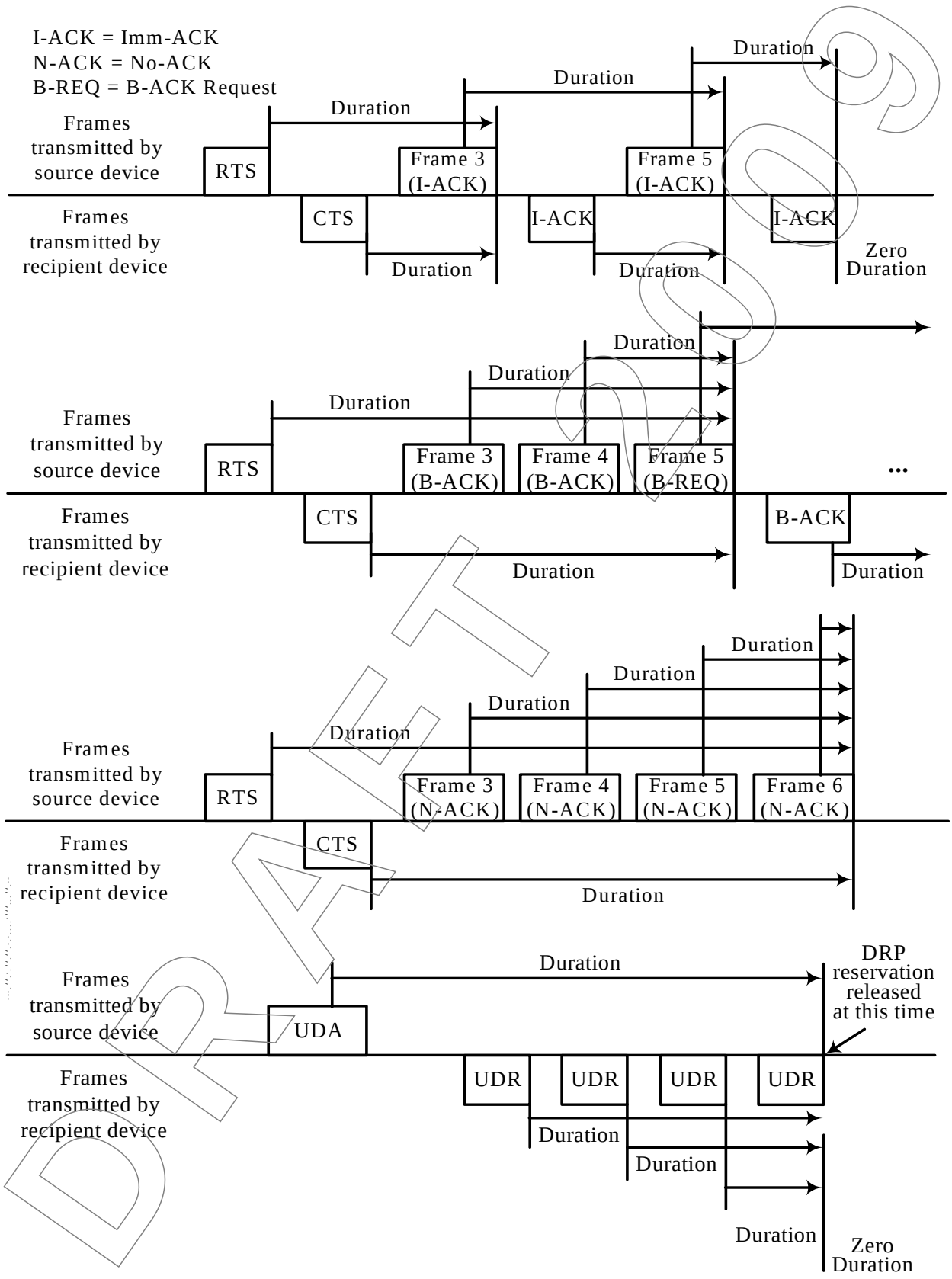


*Figure 100 - Duration Examples*



Copyright International Organization for Standardization
Provided by IHS under license with ISO
No reproduction or networking permitted without license from IHS
Not for Resale

#### 17.1.9.2 More frames

If a device sets the More Frames bit to ZERO in a frame sent with Access Method set to ONE, it shall not transmit additional frames to the same recipient(s) within the reservation block.

If a device sets the More Frames bit to ZERO in a frame sent with Access Method set to ZERO, it shall not transmit additional frames using PCA to the same recipient(s) within the current superframe unless the recipient did not include a PCA Availability IE in its beacon or included a PCA Availability IE in its beacon with the TIM IE Required bit set to ZERO.

#### 17.1.9.3 Sequence number

The Sequence Number field value is used for duplicate detection for frames sent using the Imm-ACK acknowledgement policy. It is used for both duplicate detection and reordering for frames sent using the B-ACK mechanism.

A device shall assign each MSDU or MCDU transmitted a sequence number from a modulo 2 048 counter.

A device shall assign the same sequence number to each fragment of an MSDU or MCDU.

A single sequence number applies to all MSDUs contained in an aggregated data frame. A device shall increment the sequence number counter by one for each transmitted aggregated data frame.

A device shall use a dedicated counter for MCDUs.

A device shall use a dedicated counter for each sequence of MSDUs addressed to the same DestAddr with the same Delivery ID using B-ACK acknowledgement policy.

A device may use one counter for all other MSDUs, or may use a dedicated counter for MSDUs with the same Delivery ID field value addressed to the same DestAddr.

In each beacon frame transmitted in a superframe, a device shall set the Sequence Number field from a dedicated counter that increments once per superframe, modulo 2 048, or shall set it to zero.

### 17.1.10 Information elements

IEs are contained in beacon and command frames. They convey certain control and management information. IEs may be explicitly requested using Probe command frames.

The remainder of this Clause describes when each IE is generated.

#### 17.1.10.1 Application-specific IE (ASIE)

A device may include an ASIE in its beacon for each of its applications which have made the request, as described in 17.14. The scope of the ASIE is dependent on the application that requested the inclusion of the ASIE.

#### 17.1.10.2 Application-specific Probe IE

A device may send an Application-specific Probe IE in order to request a specific ASIE. The scope and required response is dependent on the application that defines the ASIE.

#### 17.1.10.3 Beacon period occupancy IE (BPOIE)

A device shall always include a BPOIE in its beacon. In the BPOIE the device shall indicate beacons received from neighbours in the previous superframe, as well as information retained based on hibernation mode rules. It shall also indicate PHY medium activity that resulted in HCS errors, beacon frame headers received and alien beacons received within its BP in the previous superframe. It may also indicate non-beacon frames received within its BP. If the device receives a beacon within 2×mGuardTime of



Copyright International Organization for Standardization
Provided by IHS under license with ISO
No reproduction or networking permitted without license from IHS
Not for Resale

the start of a signaling slot with the Signaling Slot bit set to ONE, it shall also indicate that beacon as if it were aligned to its BPST. The device shall encode all indicated information in the BPOIE as described in 16.8.3, except a device is not required to indicate any activity in its own beacon slot.

#### 17.1.10.4 BP switch IE

A device should include a BP Switch IE in its beacon prior to changing its BPST, as specified in 17.2.6.

#### 17.1.10.5 Channel change IE

A device should include a Channel Change IE in its beacon prior to changing to a different channel. A device that includes a Channel Change IE should change channels as indicated in the IE.

#### 17.1.10.6 Distributed reservation protocol (DRP) IE

A device shall include DRP IEs in its beacon for all reservations in which it participates as a reservation owner or target, as described in 17.4.

If a device receives a frame containing a DRP IE with the Reservation Type field set to a reserved value, it shall not respond to the DRP IE, but shall treat the DRP IE as if the Reservation Type field were set to Private.

A device shall interpret a DRP IE transmitted or received in the current superframe to grant or deny access to the medium in the next superframe, depending on the access rules specific to the indicated Reservation Type in the IE.

#### 17.1.10.7 DRP availability IE

A device shall include a DRP Availability IE in its beacon as required to support DRP reservation negotiation, as described in 17.4. A DRP Availability IE received in the current superframe reflects availability prior to that superframe.

#### 17.1.10.8 Hibernation anchor IE

A device that indicates it is capable of acting as a hibernation anchor should include a Hibernation Anchor IE in its beacon to provide information on neighbours that are currently in hibernation mode as described in 17.13.5.

#### 17.1.10.9 Hibernation mode IE

A device shall include a Hibernation Mode IE in its beacon before entering hibernation mode, as specified in 17.13.4. A device that receives a Hibernation Mode IE shall report the beacon slot of the transmitter as occupied and non-movable in the BPOIE included in its beacons during the reported hibernation duration.

#### 17.1.10.10 Identification IE

A device may include an Identification IE in its beacon to provide its own identifying information to neighbours.

#### 17.1.10.11 Link feedback IE

A device may include a Link Feedback IE in its beacon to provide feedback on a link with a specific neighbour.

#### 17.1.10.12 MAC capabilities IE

A device may include a MAC Capabilities IE in its beacon.

#### 17.1.10.13 Master key identifier (MKID) IE

A device may include a MKID IE in its beacon to identify some or all of the master keys it possesses.

DRAFT



Copyright International Organization for Standardization
Provided by IHS under license with ISO
No reproduction or networking permitted without license from IHS
Not for Resale

#### 17.1.10.14 Multicast address binding (MAB) IE

A device may include a MAB IE for any active multicast bindings between multicast EUI-48s and McstAddrs. A device should include a MAB IE in its beacon for at least mMaxLostBeacons+1 superframes on activating a multicast address binding for transmission and upon detection of a change in the beacon group.

A device shall not transmit frames with a McstAddr destination address in the current superframe unless a binding to a multicast EUI-48 has been declared by inclusion of a corresponding MAB IE in its beacon in the prior and current superframes.

On receipt of a MAB IE the MAC sublayer shall establish an association between the source of the MAB IE and the multicast DevAddr and multicast EUI-48 in each Multicast Address Binding Block, to be used in address translations for the bound multicast addresses.

The MAC entity shall deliver received MSDUs addressed to an activated multicast DevAddr to the MAC client on the multicast EUI-48 bound to that multicast DevAddr by the source device of the MSDU.

#### 17.1.10.15 PCA availability IE

A device may include a PCA Availability IE in its beacon as needed to facilitate PCA in the presence of reservations or power constraints. Information in a PCA Availability IE received in the current superframe indicates availability of the device in that superframe.

#### 17.1.10.16 PHY capabilities IE

A device may include a PHY Capabilities IE in its beacon.

#### 17.1.10.17 Probe IE

A device may include a Probe IE in its beacon to request certain IEs from another device. If a device receives a beacon containing a Probe IE in the current superframe, and is required to respond according to 17.9, it shall respond in the next superframe.

#### 17.1.10.18 Regulatory Domain IE

A device that has information about the operational regulatory domain should include a Regulatory Domain IE in its beacon at least once every mDAAAnnounceInterval superframes, with the Location-aware bit set to ONE and the Regulatory Domain Number field set as defined in 16.8.18. A device that does not have information about the operational regulatory domain shall include a Regulatory Domain IE with the Location-aware bit set to ZERO in its beacon at least once every mDAAAnnounceInterval superframes if in the last mDAAIEPersistence superframes it received a beacon from a neighbour containing a Regulatory Domain IE with the Location-aware bit set to ONE. The device shall set the Regulatory Domain Number field to the most recent value received in that field within the last mDAAIEPersistence superframes from a neighbour with the Location-aware bit set to ONE.

A device that is operating in a regulatory domain that requires actions based on connection to a mains power source shall act as follows: If the device is in active mode and is connected to a mains power source it shall include a Regulatory Domain IE in its beacon at least once every mDAAAnnounceInterval superframes, with the Mains Hop Count field set to zero. If the device is in active mode and is not connected to a mains power source or its power source is unknown it shall include a Regulatory Domain IE in its beacon at least once every mDAAAnnounceInterval superframes if in the last mDAAIEPersistence superframes it received a Regulatory Domain IE. The device shall set the Mains Hop Count field to one greater than the lowest value in the Mains Hop Count field in the latest Regulatory Domain IE received from each neighbour, but not greater than mMaxMainsHopCount.

DRAFT 2009



Copyright International Organization for Standardization
Provided by IHS under license with ISO
No reproduction or networking permitted without license from IHS
Not for Resale

If a device determines that any information in its Regulatory Domain IE has changed, it should include the IE in its beacon in the next mMaxLostBeacons+1 superframes.

#### 17.1.10.19 Relinquish request IE

A device may include a Relinquish Request IE in its beacon to request that a neighbour release one or more MASs from reservations.

If a reservation target receives a request to relinquish certain MASs included in a reservation, it shall include in its beacon a DRP Availability IE and a Relinquish Request IE identifying those MASs with the Target DevAddr field set to the DevAddr of the reservation owner. The device shall include the IEs in its beacon for mMaxLostBeacons+1 superframes following the superframe in which it received the relinquish request, unless the reservation owner changes the reservation such that it does not contain the requested MASs.

#### 17.1.10.20 Tone-nulling IE

An active mode device that nulls one or more tones during its transmissions shall include a Tone-nulling IE that identifies the nulled tones and has the Avoided Tone Indication bit set to ONE in its beacon at least once every mDAAAnnounceInterval superframes. An active mode device may request neighbour devices to null tones in frames they transmit by including a Tone-nulling IE with the Protected Tone Request bit set to ONE in its beacon at least once every mDAAAnnounceInterval superframes.

The required response to reception of a Tone-nulling IE is dependent on the operational regulatory domain and other factors, and is out of scope of this standard.

A device should minimize the number of Tone-nulling IEs sent in a beacon by combining tone-nulling information into a single IE.

If a device determines that any information in its Tone-nulling IEs has changed, it should include Tone-nulling IEs in its beacon in the next mMaxLostBeacons + 1 superframes.

A device that did not receive a Tone-nulling IE from a neighbour in the last mDAAIEPersistence superframes shall discard the Tone-nulling information previously received from that neighbour.

A device that enters hibernation mode for a period less than mDAAAnnounceInterval superframes shall include IEs in its beacon as required for an active mode device. A device that enters hibernation mode for a period equal to or longer than mDAAAnnounceInterval superframes shall include required IEs in its last beacon prior to hibernating and its first beacon after hibernating.

#### 17.1.10.21 Traffic indication map (TIM) IE

A device shall include a TIM IE in its beacon in the current superframe if it has frames queued for transmission to one or more recipients that require a TIM IE. A device shall consider a recipient to require a TIM IE if the most recent beacon received from the recipient, within the last mMaxLostBeacons+1 superframes, contained a PCA Availability IE with the TIM IE Required bit set to ONE. The TIM IE shall include the DevAddrs of all such recipients.

## 17.2 Beacon period

Each superframe starts with a BP, which has a maximum length of mMaxBPLength beacon slots. The length of each beacon slot is mBeaconSlotLength. Beacon slots in the BP are numbered in sequence, starting at zero. The first mSignalSlotCount beacon slots of a BP are referred to as signaling slots and are used to extend the BP length of neighbours.

An active mode device shall transmit and receive beacons as described in this clause. When transmitting in a beacon slot, a device shall start transmission of the frame on the medium at the beginning of that beacon slot.

--`,,```,,,,````-`-`,,`,,`,`,,`---



Copyright International Organization for Standardization
Provided by IHS under license with ISO
No reproduction or networking permitted without license from IHS
Not for Resale

A device shall transmit beacons at pBeaconTransmitRate. The transmission time of beacon frames shall not exceed mMaxBeaconLength. This allows for a guard time of at least mGuardTime and pSIFS between the end of a beacon and the start of the next beacon slot.

Figure 101 illustrates an example of a BP observed by a device in a given superframe.

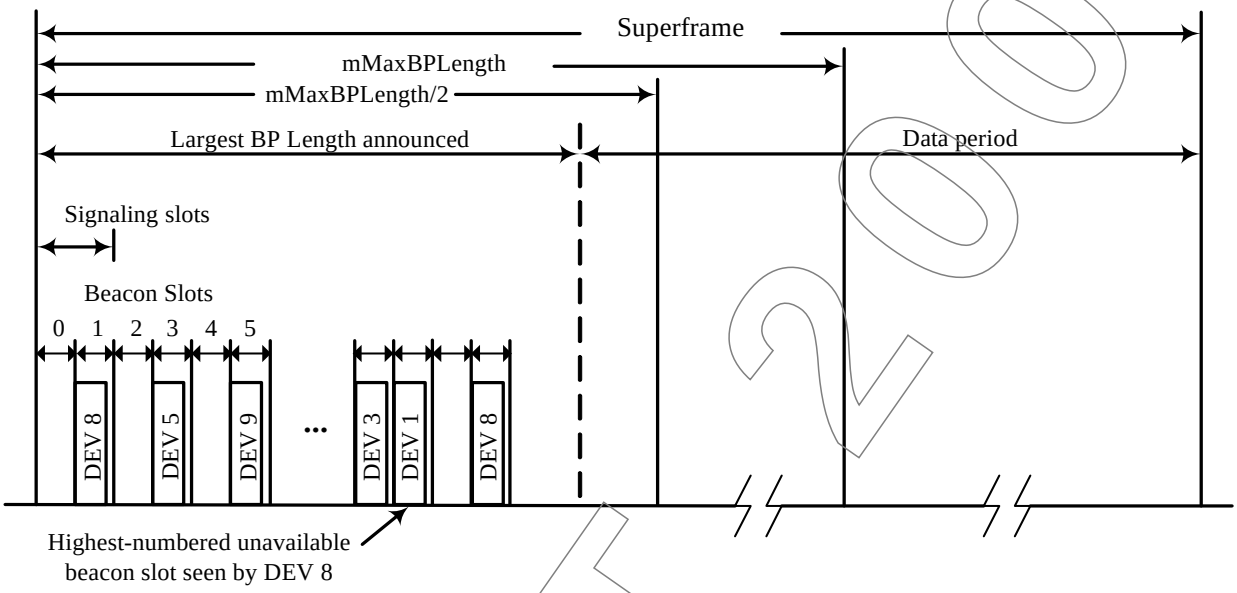


*Figure 101 - Example BP structure*

### 17.2.1 Beacon slot state

A device shall consider a beacon slot unavailable if in any of the latest mMaxLostBeacons+1 superframes:

- The beacon slot was considered to be occupied (according to Table 117); or
- The beacon slot was encoded as occupied (according to Table 117) in the BPOIE of any beacon received by the device.

A device shall consider a beacon slot available in all other cases.

### 17.2.2 BP length

A device shall consider a beacon slot to be monitored if in any of the latest mMaxLostBeacons+1 superframes:

- The device received a beacon frame in that beacon slot that is aligned to its BPST;
- The device received a beacon frame with an invalid FCS within 2×mGuardTime of that beacon slot boundary; or
- The beacon slot was encoded as occupied (according to Table 117) with a DevAddr not equal to BcstAddr in the BPOIE of any beacon received by the device.

A device shall announce its BP length in its beacon as a count of beacon slots starting from the BPST. The announced BP length shall include a) The device's own beacon slot in the current superframe, b) All monitored beacon slots in the BP of the prior superframe, and c) The beacon slot indicated in any beacon received in a signaling slot in the prior superframe.

DRAFT 2009



Copyright International Organization for Standardization
Provided by IHS under license with ISO
No reproduction or networking permitted without license from IHS
Not for Resale

The announced BP length shall not include more than mBPExtension beacon slots after the latest of a, b, and c above, unless otherwise indicated in 17.2.6. The announced BP length shall not exceed mMaxBPLength. Power-sensitive devices generally should not include any beacon slots after the last monitored beacon slot in their announced BP length.

The BP length reported by a device varies, as new devices become members of its extended beacon group, and as the device or other devices in its extended beacon group choose a new beacon slot for beacon slot collision resolution or BP contraction.

### 17.2.3 Beacon transmission and reception

#### 17.2.3.1 Beacon transmission

Before a device transmits any frames, it shall scan for beacons for at least one superframe, or at least two superframes if no beacon frame is received. If the device receives no frame headers during the scan, it shall create a new BP and send a beacon in the first beacon slot after the signaling slots. If the device receives one or more frame headers, but no beacon frames with a valid FCS during the scan, the device should scan for an additional superframe.

If the device receives one or more beacons during the scan, it shall not create a new BP. Instead, prior to communicating with another device, the device shall transmit a beacon in a beacon slot selected from up to mBPExtension beacon slots located after the highest-numbered unavailable beacon slot in the last superframe and within mMaxBPLength after the BPST.

With the exception of transmitting its own beacon as described in 17.2.3, a device shall not transmit frames in the current superframe during the BP length indicated in the most recent beacon received from of any neighbour in the previous mMaxLostBeacons+1 superframes. A device shall not change beacon slots to a slot earlier than the highest-numbered unavailable beacon slot in the last superframe except as specified in 17.2.5.

#### 17.2.3.2 Neighbours

A device shall consider another device to be a neighbour if it has received a beacon from that device within the last mMaxLostBeacons+1 superframes, and the latest beacon from the device indicated a BPST aligned with its own. If a device has not received a beacon from another device for the last mMaxLostBeacons+1 superframes, it shall not consider the device a neighbour.

A device shall not consider a received beacon with the Signaling Slot bit set to ONE as received from a neighbour.

#### 17.2.3.3 Beacon slot collision

If a device detects a beacon slot collision as described in 17.2.4, it shall select a different beacon slot for its subsequent beacon transmissions from up to mBPExtension beacon slots located after the highest-numbered unavailable beacon slot in the last superframe and within mMaxBPLength after the BPST.

#### 17.2.3.4 Use of signaling slots

If the beacon slot in which a device will transmit its beacon in the current superframe is located beyond the BP length indicated in any beacon the device received from a neighbour in the previous superframe, the device shall also transmit the same beacon, except with the Signaling Slot bit set to ONE, in a randomly selected signaling slot, except as follows:

- A device should follow 17.2.6.4 if applicable.
- If a device transmits a beacon in a signaling slot for mMaxLostBeacons+1 consecutive superframes, it shall not transmit a beacon in a signaling slot in the next mMaxLostBeacons+1 superframes, and it should not transmit a signaling slot beacon for



Copyright International Organization for Standardization
Provided by IHS under license with ISO
No reproduction or networking permitted without license from IHS
Not for Resale

an additional aperiodic interval that does not exceed mMaxSignalingSlotBackoff superframes.

Subject to the preceding exceptions, a device also may send a beacon in a signaling slot in response to abnormal conditions, such as failure to receive a beacon from a neighbour that previously did not include the device's beacon slot in its BP Length, or failure of a neighbour to report reception of the device's beacon in its BPOIE.

A device may consider a beacon received in a signaling slot as if it were not a received beacon, except to report reception as required in 17.1.10.3 and to process the Beacon Slot Number field as required in 17.2.2 and 17.2.4.

#### 17.2.3.5 Required reception interval

An active mode device shall listen for neighbours' beacons in the first N beacon slots in each superframe, where N is the greater of its BP Length values for the current and previous superframes, as defined in 17.2.2. At a minimum, the device shall listen for intervals such that it would receive a frame with a reception time within mGuardTime of the start of any of the N beacon slots.

If a device received a beacon with invalid FCS, or detected a medium activity that did not result in reception of a frame with valid HCS in a signaling slot in the previous superframe, no BP length adjustment is required, but it shall listen for beacons for an additional mBPExtension beacon slots after its BP length indicated in the current superframe, but not more than mMaxBPLength beacon slots.

#### 17.2.3.6 Skipping beacon transmission

An active mode device shall transmit a beacon in each superframe, except as follows: In order to detect beacon slot collisions with neighbours, a device shall skip beacon transmission aperiodically, and listen for a potential neighbour in its beacon slot. A device shall skip beacon transmission, but not any associated signaling slot beacon, at least every mMaxNeighborDetectionInterval. When a device skips beacon transmission, it shall act as if the skipped beacon were transmitted.

### 17.2.4 Beacon slot collision detection

A device shall consider itself involved in a beacon slot collision with another device in its extended beacon group if one of the following events occurs:

- Its beacon slot is reported as occupied in the BPOIE in any beacon it receives in the current superframe, but the corresponding DevAddr is neither BcstAddr nor its own DevAddr used in the previous superframe.
- After skipping beacon transmission in the previous superframe, its beacon slot is reported as occupied in the BPOIE in any beacon it receives in the current superframe, and the corresponding DevAddr is not BcstAddr.
- When skipping beacon transmission in the current superframe, it receives a MAC header of type beacon frame in its beacon slot
- It receives a signaling slot beacon aligned with one of its own signaling slots, with the Beacon Slot Number field set to its own beacon slot.

Certain events indicate a potential beacon slot collision. A device should consider the possibility of a beacon slot collision and take appropriate action if one or more of the following anomalous events occurs, or occurs consistently over multiple superframes:

- The device's beacon slot was reported as occupied and the corresponding DevAddr was BcstAddr in the BPOIE of a beacon it received in the current superframe, and it sent a beacon in its beacon slot in the previous superframe.



Copyright International Organization for Standardization
Provided by IHS under license with ISO
No reproduction or networking permitted without license from IHS
Not for Resale

- After skipping beacon transmission in the previous superframe, its beacon slot is reported as occupied in the BPOIE in any beacon it receives in the current superframe and the corresponding DevAddr is BcstAddr.
- When skipping beacon transmission in the current superframe, it receives a PHY indication of medium activity in its beacon slot that does not result in correct reception of a frame header.

In reaction to events that indicate a potential beacon slot collision, a device should:

- consider itself involved in a beacon slot collision and change slots as required in 17.2.3.3;
- skip beacon transmission; or
- send a beacon in a signaling slot, subject to requirements in 17.2.3.4.

At a minimum, a device shall execute at least one of these recommended reactions in the next superframe if in mMaxBeaconSlotCollisionDetectionLatency consecutive superframes one or more of the anomalous events described above occurs, and the device has not executed a recommended reaction in those mMaxBeaconSlotCollisionDetectionLatency superframes.

Other events can also indicate a potential beacon slot collision. For example, if a device's beacon slot is frequently reported as unoccupied in the BPOIE of a beacon it receives, it could indicate a collision, and the device may take action as described above.

### 17.2.5 BP contraction

A device shall consider its beacon to be movable if in the previous superframe it found at least one available beacon slot between the signaling slots and the beacon slot it indicates in its beacon in the current superframe. However, for purposes of BP contraction, a device may consider an unoccupied beacon slot to be occupied for up to mMaxMovableLatency superframes, if it detects conditions that indicate contraction into that beacon slot might lead to a beacon slot collision, such as a previous beacon slot collision or indication of poor link conditions in that beacon slot.

A device that includes a Hibernation Mode IE in its beacon shall consider its beacon to be non-movable during the announced hibernation period.

A device not involved in a beacon slot collision or a BP merge shall shift its beacon into the earliest available beacon slot following the signaling beacon slots in the BP of the next superframe, if in each of the latest mMaxLostBeacons+1 superframes:

- The device’s beacon was movable; and
- the device did not receive a beacon from a neighbour that indicated a beacon slot after its own and had the Movable bit set to ONE; and
- the device did not receive a beacon from a neighbour that contained a BPOIE that encoded a beacon slot after its own as Movable (per Table 127).

However, if in the last mMaxLostBeacons+1 superframes the device received a beacon from a neighbour that indicated a BP Length that did not include the device's beacon slot, and that beacon had the Movable bit set to ONE, the device should not change to an earlier beacon slot in the next superframe.

Figure 102 shows some examples of BP contraction.

DRAFT



Copyright International Organization for Standardization
Provided by IHS under license with ISO
No reproduction or networking permitted without license from IHS
Not for Resale

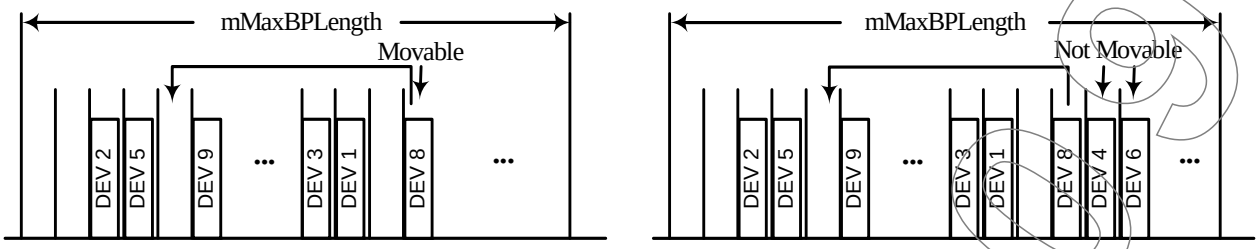


*Figure 102 - Illustration for BP contraction by example devices*

### 17.2.6 Merger of multiple BPs

Due to changes in the propagation environment, mobility, or other effects, devices using two or more unaligned BPSTs may come into range. This causes overlapping superframes. A received beacon with valid HCS and FCS that indicates a BPST that is not aligned with a device's own BPST is referred to as an alien beacon. The BP defined by the BPST and BP length in an alien beacon is referred to as an alien BP.

Synchronization problems could cause the beacon of a fast device to appear to be an alien beacon. A device shall consider a BPST to be aligned with its own if that BPST differs from its own by less than 2×mGuardTime. A device shall consider an alien BP to overlap its own if its BPST falls within the alien BP or if the alien BPST falls within its own BP. A device shall not consider a beacon that has the Signaling Slot bit set to ONE to be an alien beacon.

If a device does not receive an alien beacon for up to mMaxLostBeacons superframes after receiving one in a previous superframe, it shall use information contained in the most-recently received beacon as if the alien beacon were received at the same offset within the current superframe.

#### 17.2.6.1 Overlapping BPs

If the BPST of a device falls within an alien BP, the device shall relocate its beacon to the alien BP according to the following rules:

1. The device shall change its BPST to the BPST of the alien BP.
2. The device shall adjust its beacon slot number such that its new beacon slot number is its old beacon slot number plus one, plus the number of the highest occupied beacon slot indicated in any beacon received in the alien BP, minus mSignalSlotCount. Alternatively, it shall follow normal BP join rules as specified in 17.2.3.1 to relocate its beacon to the alien BP.
3. The device shall not send further beacons in its previous BP.

#### 17.2.6.2 Non-overlapping BPs

If a device detects an alien BP that does not overlap in time with its own BP, it shall merge BPs according to the following rules.

1. The device shall include in its beacon a DRP IE with Reservation Type set to Alien BP for the alien BP. Since the MAS boundaries may not be aligned, the device may need to include an additional MAS in the reservation to completely cover the alien BP. If the device received multiple beacons from the alien BP, it shall include all MASs used by the largest reported BP length in the reservation. If the MASs occupied by the alien BP change over time, the device shall update the DRP IE accordingly.

DRAFT



Copyright International Organization for Standardization
Provided by IHS under license with ISO
No reproduction or networking permitted without license from IHS
Not for Resale

2. The device shall start the relocation process to the alien BP, according to 17.2.6.3, within mBPMergeWaitTime if the alien BPST falls within the first half of the superframe, or within 1.5×mBPMergeWaitTime if the alien BPST falls within the second half of the superframe, but shall not start the relocation process if a beacon received in that alien BP includes a BP Switch IE.

A device that transmits or receives a beacon in its own BP that contains a DRP IE with Reservation Type set to Alien BP shall observe the following rules:

1. The device should not change beacon slots except as required by merge rules in 17.2.6, unless a collision is detected.
2. If the device transmits the beacon that contains the Alien BP reservation, it shall listen for beacons during the MASs indicated in the reservation. If the device receives the beacon that contains the Alien BP reservation, it should listen for beacons during the MASs indicated in the reservation.

#### 17.2.6.3 Beacon relocation

If a device starts or has started the beacon relocation process and receives an alien beacon, it shall follow these rules:

A. If the device did not include a BP Switch IE in its last beacon, it shall include a BP Switch IE in its beacon in the following superframe with the fields set as follows:

   A1. The device shall set the BP Move Countdown field to mInitialMoveCountdown.

   A2. The device shall set the BPST Offset field to the positive difference in microseconds between the alien BPST and the device's BPST. That is, the field contains the number of microseconds that the device must delay its own BPST to align with the alien BPST. If multiple alien beacons are received, the device shall set the BPST Offset field to the largest calculated value.

   A3. The device shall set the Beacon Slot Offset field to:

      a. One plus the number of the highest occupied beacon slot indicated by any beacon received in the alien BP, based on the Beacon Slot Number field and BPOIE, minus mSignalSlotCount; or

      b. Zero to indicate the device will join the alien BP using normal join rules as specified in 17.2.3.

B. If the device included a BP Switch IE in its last beacon, it shall modify the BP Switch IE in the following superframe as follows:

   B1. If the elapsed time between the device's BPST and the following alien BPST is larger than the device's BPST Offset field + 2×mGuardTime, the device shall set the BP Move Countdown field, the BPST Offset field, and the Beacon Slot Offset field as described in A1, A2 and A3 above respectively.

   B2. If the elapsed time between the device's BPST and the following alien BPST is larger than the device's BPST Offset field - 2×mGuardTime and smaller than the device's BPST Offset field + 2×mGuardTime, the device shall set the BPST Offset field as described in A2. It shall set the Beacon Slot Offset field as described in A3 if the value in the field would be increased, or leave it unchanged otherwise. It shall set the BP Move Countdown field to one less than the value used in its last beacon if the Beacon Slot Offset field is unchanged, or set it as described in A1 if the Beacon Slot Offset field is changed.

If a device receives a neighbour’s beacon that contains a BP Switch IE, it shall follow these rules:



Copyright International Organization for Standardization
Provided by IHS under license with ISO
No reproduction or networking permitted without license from IHS
Not for Resale

DRAFT

C. If the device did not include a BP Switch IE in its last beacon, it shall include a BP Switch IE in its beacon in the following superframe with the fields set as follows:

C1. The device shall set the BP Move Countdown field to the BP Move Countdown field of the neighbour's BP Switch IE.

C2. The device shall set the BPST Offset field to the value of the same field contained in the neighbour's beacon.

C3. The device shall set the Beacon Slot Offset field to:

a. The larger of: one plus the number of the highest occupied beacon slot indicated by any alien beacon received in the alien BP identified by the neighbour's BP Switch IE, based on the Beacon Slot Number field and BPOIE, minus mSignalSlotCount; or the Beacon Slot Offset field contained in the neighbour's beacon; or

b. Zero, to indicate the device will join the alien BP using normal BP join rules as specified in 17.2.3.1.

D. If the device included a BP Switch IE in its last beacon, it shall modify the BP Switch IE as follows:

D1. If the BPST Offset field contained in the neighbour's beacon is larger than the device's BPST Offset field + 2×mGuardTime, the device shall set the BP Move Countdown field, the BPST Offset field, and the Beacon Slot Offset field as described in C1, C2 and C3 above respectively.

D2. If the difference between the BPST Offset field contained in the neighbour's beacon and the device's BPST Offset field is smaller than 2×mGuardTime, the device shall modify its BP Switch IE as follows:

a. If the Beacon Slot Offset field contained in the neighbour's beacon is larger than the device's Beacon Slot Offset field, the device shall set the BP Move Countdown field, the BPST Offset field, and the Beacon Slot Offset field as described in C1, C2 and C3 above respectively.

b. If the Beacon Slot Offset field contained in the neighbour's beacon is equal to or smaller than the device's Beacon Slot Offset field, the device does not receive alien beacons from the alien BP indicated by its current BPST Offset field, and the BPMoveCountdown field contained in the neighbour's beacon is less than the device's BPMoveCountdown field, then the device shall set the BPST Offset field as described in C2 above. It shall not change the Beacon Slot Offset field. It shall set the BP Move Countdown field to one less than the value used in its last beacon.

If a device included a BP Switch IE in its beacon of the previous superframe and none of the conditions within B or D apply, the device shall not change the BPST Offset field or the Beacon Slot Offset field, and shall set the BP Move Countdown field to one less than the value used in its beacon of the previous superframe.

If a device includes a BP Switch IE in its beacon, it shall continue to do so until it completes or halts the relocation process.

If a device receives an alien beacon that indicates relocation earlier than its planned relocation, the device shall halt the relocation process.

To halt the relocation process, a device shall include a BP Switch IE in its beacon with BPST Offset field set to 65 535, Beacon Slot Offset field set to zero, and BP Move Countdown field set to mInitialMoveCountdown. In following superframes, it shall follow the rules above. In the superframe after sending a BP Switch IE with BPST Offset set to 65 535 and BP Move Countdown set to zero, the device shall remove the BP Switch IE



Copyright International Organization for Standardization
Provided by IHS under license with ISO
No reproduction or networking permitted without license from IHS
Not for Resale

from its beacon, but shall not change its beacon slot and shall continue to synchronize to current neighbours.

At the end of the superframe in which a device includes a BP Switch IE with a BP Move Countdown field equal to zero, the device shall adjust its BPST based on its BPST Offset field. It may transmit a beacon in that superframe, or delay one superframe to begin beacon transmission in its new BP. After relocating its beacon to the alien BP, the device shall include neither the BP Switch IE nor the alien BP DRP IE in its beacon. If the Beacon Slot Offset field was non-zero, the device shall transmit a beacon in the beacon slot with number equal to its prior beacon slot number plus the value from the Beacon Slot Offset field. If this beacon slot number is greater than or equal to mMaxBPLength, the device shall follow the normal BP join rules as described in 17.2.3 to relocate its beacon to the alien BP.

#### 17.2.6.4 Use of signaling slots after BP merge

After changing its BPST, regardless of whether due to overlapping or non-overlapping BPs, if a device is required to send a beacon in a signaling slot according to 17.2.3.4, it should wait for a random number of superframes before sending a beacon in a signaling slot. The device should choose the random number with equal probability in the range zero to the BP Length declared in its last beacon before relocating to the alien BP.

#### 17.2.6.5 BP extension

A device that receives an alien beacon with a BP Switch IE with Beacon Slot Offset field greater than zero shall set its BP length to at least the sum of the Beacon Slot Offset field and the BP length reported in the alien beacon, but not greater than mMaxBPLength.

## 17.3 Prioritized contention access (PCA)

The PCA mechanism provides differentiated, distributed contention access to the medium for four access categories (ACs) of frames buffered in a device for transmission. A device employs a prioritized contention procedure for each AC to obtain a TXOP for the frames belonging to that AC using the PCA parameters associated with that AC.

For data and aggregated data frames, the four ACs are mapped from eight user priorities as defined in Table 127.

Table 127 - User Priority to access category mappings

| Priority | User Priority (Same as 802.1D User Priority) | 802.1D Designation | AC | Designation (Informative) |
|---|---|---|---|---|
| Lowest | 1 | BK | AC_BK | Background |
| | 2 | - | AC_BK | Background |
| | 0 | BE | AC_BE | Best Effort |
| | 3 | EE | AC_BE | Best Effort |
| | 4 | CL | AC_VI | Video |
| | 5 | VI | AC_VI | Video |
| | 6 | VO | AC_VO | Voice |
| Highest | 7 | NC | AC_VO | Voice |



Copyright International Organization for Standardization
Provided by IHS under license with ISO
No reproduction or networking permitted without license from IHS
Not for Resale

For command frames, any appropriate AC may be selected.

### 17.3.1 PCA medium availability

A device shall consider the medium to be unavailable for PCA at all of the following times:

- Within the device's BP or neighbours' BPs;
- Within alien BP reservation blocks announced by itself or its neighbours;
- Within hard and private reservation blocks with Reservation Status set to ONE announced by itself or its neighbours, unless the reservation block has been released;
- Within soft reservation blocks with Reservation Status set to ONE if a neighbour is the reservation target and the reservation owner is not a neighbour, unless the device is the reservation owner; and
- For a zero-length interval at the start of soft or PCA reservation blocks with Reservation Status set to ONE if a neighbour is the reservation owner, for purposes of determining TXOP limits.

At all other times, a device shall consider the medium available for PCA.

### 17.3.2 NAV

A device that transmits or receives frames using PCA shall maintain a network allocation vector (NAV) that contains the remaining time that a neighbour device has indicated it will access the medium. A device that receives a frame header not addressed to it shall update its NAV with the received Duration field if the new NAV value is greater than the current NAV value. A device shall consider the updated NAV value to start at the end of the PLCP header on the medium.

A device that receives a frame header with invalid HCS outside its unreleased reservation blocks shall update its NAV as if the frame were correctly received with Duration equal to zero.

A device shall reduce its NAV as time elapses until it reaches zero. The NAV shall be maintained to at least mClockResolution.

### 17.3.3 Medium status

For PCA purposes, a device shall consider the medium to be busy for any of the following conditions:

- When its CCA mechanism indicates that the medium is busy;
- When the device's NAV is greater than zero;
- When the device is transmitting or receiving a frame on the medium;
- When the Duration announced in a previously transmitted frame has not yet expired; and
- When the medium is unavailable for PCA.

At all other times a device shall consider the medium to be idle.

### 17.3.4 PCA parameters

A device shall use the set of PCA parameters defined for an AC to obtain a TXOP or perform backoff for this AC. These parameters are summarized below. The parameter values are specified in Table 129 in 17.16.

#### 17.3.4.1 AIFS[AC]

A device shall wait for the medium to become idle for AIFS[AC] before obtaining a TXOP or starting/resuming decrementing the backoff counter for the AC. AIFS[AC] is defined below:

$$AIFS[AC] = pSIFS + mAIFSN[AC] \times pSlotTime$$

DRAFT 2009



Copyright International Organization for Standardization
Provided by IHS under license with ISO
No reproduction or networking permitted without license from IHS
Not for Resale

AIFS[AC] is related to other timings as defined in Figure 103 and Figure 104.

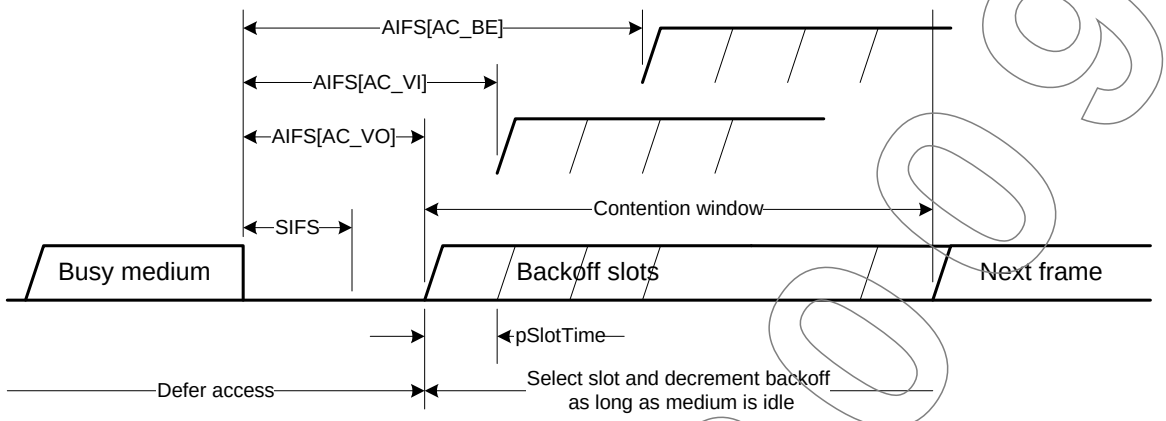


*Figure 103 - IFS relationships for PCA*

#### 17.3.4.2 mCWmin[AC] and mCWmax[AC]

A device shall set CW[AC] to an appropriate integer in the range [mCWmin, mCWmax] after invoking a backoff for the AC, and shall set the backoff counter for the AC to an integer sampled from a random variable uniformly distributed over the interval [0, CW[AC]].

#### 17.3.4.3 mTXOPLimit[AC]

A device shall not initiate a frame transaction in a TXOP it obtained for an AC unless the frame transaction can be completed within mTXOPLimit[AC] of the start of the TXOP and pSIFS plus mGuardTime before the medium becomes unavailable for PCA.

### 17.3.5 Obtaining a TXOP

A device shall consider itself to have obtained a TXOP for an AC if it meets the following conditions:

- The device has one or more newly arrived data frames or newly generated command frames belonging to this AC;
- The device had a backoff counter of zero value for this AC and had no frames belonging to this AC prior to the arrival or generation of the new frames;
- The device determines that the medium has been idle for AIFS[AC] or longer; and
- The device has no backoff counters of zero value for other ACs, or has backoff counters of zero value for some other ACs, but such ACs have a lower priority than this AC or the device has no frames belonging to those ACs that are ready for transmission.

The device shall start transmitting a frame belonging to this AC, which may be an RTS frame, as soon as the above conditions are satisfied, subject to the criteria stated in 17.3.6. The device shall treat the start of the frame transmission on the wireless medium as the start of the TXOP.

A device shall also consider itself to have obtained a TXOP for an AC if it meets the following conditions:

- The device has one or more frames belonging to this AC buffered for transmission, including retry;

DRAFT 2009



Copyright International Organization for Standardization
Provided by IHS under license with ISO
No reproduction or networking permitted without license from IHS
Not for Resale

- The device set the backoff counter for this AC to zero in the last backoff for this AC and determines that the medium has been idle for AIFS[AC] since that backoff at the end of the current PCA slot, or the device decrements its backoff counter for this AC from one to zero in the current PCA slot; and
- The device has no backoff counters of zero value for other ACs, or has backoff counters of zero value for some other ACs, but such ACs have a lower priority than this AC or the device has no frames belonging to those ACs that are ready for transmission.

The TXOP shall start at the end of the current PCA slot, i.e., the start of the next PCA slot.

Figure 104 illustrates the timing relationships in obtaining a TXOP.

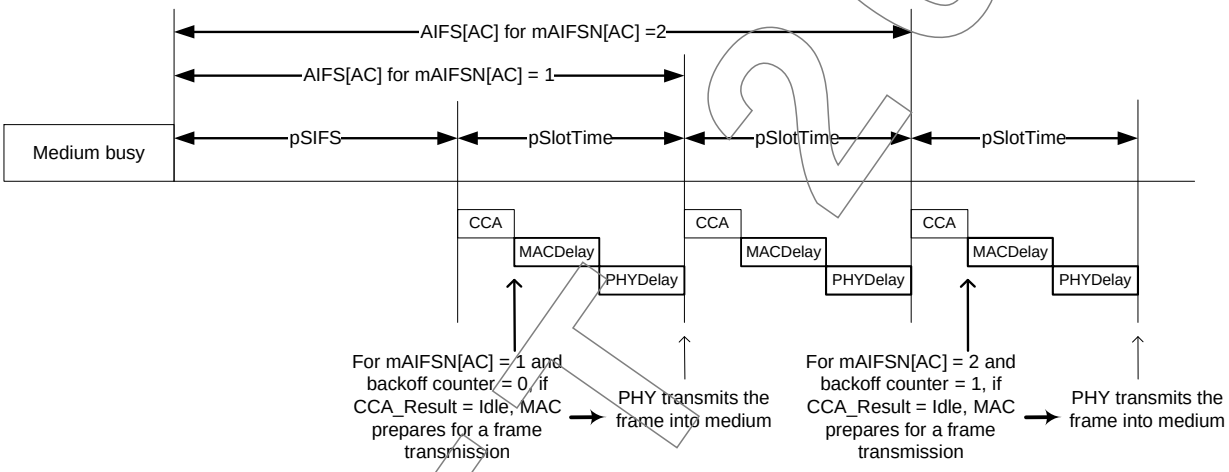


CCA = pCCADetectTime
MACDelay = Time required by MAC for preparing a frame transmission and transfering the frame to PHY SAP
PHYDelay = Time required of PHY to transfer the frame from PHY-SAP to wireless medium

*Figure 104 - PCA timing relationships*

A device shall ensure that the TXOP it has obtained for an AC is not longer than mTXOPLimit[AC] and ends pSIFS plus mGuardTime before the medium becomes unavailable for PCA.

### 17.3.6 Using a TXOP

A device that has obtained a TXOP is referred to as a TXOP owner. A TXOP owner shall initiate one or more frame transactions that belong to the same AC without backoff, in the TXOP it has obtained for this AC, subject to the following criteria:

- Each transaction in the TXOP will be completed within the obtained TXOP; and
- The recipient device will be available to receive and respond during that frame transmission.

A device may retry a frame in a new TXOP that will result in a frame transaction that exceeds the mTXOPLimit[AC] restriction under the following circumstances:

- The frame is the sole frame transmitted by the device in the current TXOP; and
- The frame transaction will be completed pSIFS and mGuardTime before the medium becomes unavailable for PCA.

DRAFT 2009



Copyright International Organization for Standardization
Provided by IHS under license with ISO
No reproduction or networking permitted without license from IHS
Not for Resale

A recipient device shall not transmit a CTS frame in response to a received RTS frame if its NAV is greater than zero. A recipient device shall not transmit a CTS, Imm-ACK or B-ACK response to a received frame requiring such a response if the response will not be completed pSIFS before the medium becomes unavailable for its PCA.

Under the rules stated above, the following timings apply to transmissions, including responses, in a TXOP (these timings are referenced with respect to transmission to or reception from the wireless medium):

- The TXOP owner shall transmit the first frame of the first or sole frame transaction in the TXOP at the start of the TXOP.
- After transmitting a frame with the ACK Policy set to No-ACK or B-ACK, the TXOP owner shall transmit any subsequent frame pMIFS or pSIFS after the end of that transmitted frame.
- After receiving an RTS frame or a non-RTS frame with the ACK Policy set to Imm-ACK or B-ACK Request, the recipient device shall transmit a CTS frame or an Imm-ACK or B-ACK frame pSIFS after the end of the received frame.
- After receiving an expected CTS, Imm-ACK or B-ACK response to the preceding frame it transmitted, the TXOP owner shall transmit the next frame, or retransmit a frame it transmitted earlier in the case of receiving a B-ACK, if available, pSIFS after the end of the received frame.
- After receiving a requested B-ACK frame with a valid HCS but an invalid FCS, the TXOP owner shall retransmit the last frame it transmitted, or transmit the next frame, if available, pSIFS after the end of the B-ACK frame.

If a device cannot transmit its next frame according to these timing requirements, it shall consider the TXOP ended.

A device shall not transmit frames using PCA to a recipient device within a MAS if the recipient has indicated in a PCA Availability IE in the current superframe that it is unavailable in that MAS. A device that indicates available MASs in a PCA Availability IE in the current superframe and does not set the TIM IE Required bit shall be available to receive frames during those MASs in that superframe if the medium is available for PCA. If the device sets the TIM IE required bit, it shall listen during indicated MASs where the medium is available for PCA in a superframe in which it received a TIM IE containing its DevAddr. If a device does not include a PCA Availability IE in its beacon, it shall be available to receive frames during all MASs available for PCA.

### 17.3.7 Invoking a backoff procedure

A device shall maintain a backoff counter for each AC to transmit frames belonging to the AC using PCA.

A device shall set the backoff counter for an AC to an integer sampled from a random variable uniformly distributed over the range [0, CW[AC]], inclusive, when it invokes a backoff for this AC. The device shall initialize CW[AC] to mCWmin[AC] before invoking any backoff for the AC, adjusting CW[AC] in the range [mCWmin[AC], mCWmax[AC]], inclusive, in the course of performing PCA for the AC as described below.

The device shall set CW[AC] back to mCWmin[AC] after receiving a CTS or Imm-ACK frame or the frame header of a B-ACK frame expected in response to the last transmitted frame that belonged to the AC, or upon transmitting a frame with ACK Policy set to No-ACK or B-ACK that belongs to the AC. A device shall also set CW[AC] back to mCWMin[AC], but shall not select a new backoff counter value, after discarding a buffered frame belonging to the AC.

A device shall invoke a backoff procedure and draw a new backoff counter value as specified below.



Copyright International Organization for Standardization
Provided by IHS under license with ISO
No reproduction or networking permitted without license from IHS
Not for Resale

1. A device shall invoke a backoff for an AC, with CW[AC] set to mCWmin[AC], when it has an MSDU arriving at its MAC SAP, or a command generated at the MAC sublayer that belongs to this AC, under the following conditions:
   - The device had a backoff counter of zero value for this AC but is not in the middle of a frame transaction belonging to the same AC; and
   - The device determines that the medium is busy, or the device has a backoff counter of zero value for another AC, and such an AC has a higher priority than this AC and the device has frames belonging to that AC that are ready for transmission.
2. A device shall invoke a backoff for an AC, with CW[AC] set to mCWmin[AC], at the end of transmitting a frame with the ACK policy set to No-ACK or B-ACK, or at the end of receiving an expected Imm-ACK or B-ACK response to its last transmitted frame, under the following condition:
   - The device has no other frames belonging to this AC for transmission in the current TXOP obtained for this AC.
3. A device shall invoke a backoff for an AC, with CW[AC] set to mCWmin[AC], at the end of transmitting a frame with the ACK policy set to No-ACK or B-ACK, or at the end of correctly receiving the frame header of an expected Imm-ACK or B-ACK response frame to its last transmitted frame, under the following conditions:
   - The device has one or more frames belonging to this AC that need to be transferred over the wireless medium; and
   - The device finds that there is not enough time remaining in the current TXOP obtained for this AC to complete the next frame transaction belonging to this AC.
4. A device shall invoke a backoff for an AC, with CW[AC] (but not the backoff counter in general) kept to the same value for this AC, at the start of a TXOP obtained for the AC under the following condition:
   - The device finds that there is not enough time to complete a pending frame transaction belonging to this AC in the obtained TXOP.
5. A device shall invoke a backoff for an AC, with CW[AC] set to the smaller of mCWmax[AC] or 2×CW[AC]+1 (the latter CW[AC] being the last CW value for this AC), at the end of the current PCA slot under the following conditions:
   - The device has one or more frames belonging to this AC buffered for transmission, including retry;
   - The device set the backoff counter for this AC to zero in the last backoff for this AC and determines that the medium has been idle for AIFS[AC] since that backoff at the end of the current PCA slot, or the device decrements its backoff counter for this AC from one to zero in the current PCA slot; and
   - The device has a backoff counter of zero value for another AC, and such an AC has a higher priority than this AC and the device has frames belonging to that AC that are ready for transmission.
6. A device shall invoke a backoff for an AC, with CW[AC] set to the smaller of mCWmax[AC] or 2×CW[AC]+1 (the latter CW[AC] being the last CW value for this AC), at pSIFS plus the Imm-ACK frame transmission time after the end of the last frame it transmitted, under the following condition:
   - The device does not receive an expected CTS or Imm-ACK frame, or does not correctly receive the frame header of a requested B-ACK frame by this time.

DRAFT



Copyright International Organization for Standardization
Provided by IHS under license with ISO
No reproduction or networking permitted without license from IHS
Not for Resale

### 17.3.8 Decrementing a backoff counter

Upon invoking a backoff for an AC, a device shall ensure that the medium is idle for AIFS[AC] before starting to decrement the backoff counter for the AC. To this end, a device shall define the first PCA slot to start at the time when the medium has been idle for pSIFS after the backoff invocation, as defined in Figure 104, with subsequent PCA slots following successively until the medium becomes busy. All PCA slots have a length of pSlotTime.

A device shall treat the CCA result at pCCADetectTime after the start of a PCA slot to be the CCA result for that PCA slot. If the medium is idle in a PCA slot, and the medium has been idle for at least mAIFS[AC], the device shall decrement the backoff counter for that AC by one at that time. This procedure is also defined in Figure 104**.**

The device shall freeze the backoff counter for each AC when the medium becomes busy. The device shall treat the residual backoff counter value as if the value were set due to the invocation of a backoff for the AC, following the above procedure to resume decrementing the backoff counter.

## 17.4 Distributed reservation protocol (DRP)

The DRP enables devices to reserve one or more MASs that the device can use to communicate with one or more neighbours. All devices that use the DRP for transmission or reception shall announce their reservations by including DRP IEs in their beacons (see 16.8.6). A reservation is the set of MASs identified by DRP IEs with the same values in the Target/Owner DevAddr, Owner, Reservation Type, and Stream Index fields.

Reservation negotiation is always initiated by the device that will initiate frame transactions in the reservation, referred to as the reservation owner. The device that will receive information is referred to as the reservation target.

A reservation defined by DRP IEs with the Owner/Target DevAddr field set to a McstAddr and the Owner bit set to ONE is referred to as a multicast reservation. A reservation defined by DRP IEs with the Owner bit set to ZERO and made in response to a multicast reservation is also referred to as a multicast reservation.

### 17.4.1 Reservation type

Each DRP IE, whether included in a beacon or separately transmitted during explicit DRP negotiation, specifies a reservation type. A device shall decode all DRP IEs in the most recent beacon received from each neighbour within the last mMaxLostBeacons+1 superframes, and shall not transmit frames within the MASs indicated in the reservation except as permitted by the reservation type. A device shall interpret DRP IEs in beacons sent or received in the current superframe to permit or restrict access to the medium in the following superframe. For all reservation types, a device shall not initiate a frame transaction in a reservation block if that transaction would not complete pSIFS plus mGuardTime before the end of the reservation block.

DRAFT ECMA-368



Copyright International Organization for Standardization
Provided by IHS under license with ISO
No reproduction or networking permitted without license from IHS
Not for Resale

Reservation types are defined and summarized in Table 128.

Table 128 - Reservation Types

| Reservation Type | Description | Reference |
|---|---|---|
| Alien BP | Prevents transmission during MASs occupied by an alien BP. | 17.4.1.1 |
| Hard | Provides exclusive access to the medium for the reservation owner and target; unused time should be released for PCA. | 17.4.1.2 |
| Soft | Permits PCA, but the reservation owner has preferential access. | 17.4.1.3 |
| Private | Provides exclusive access to the medium for the reservation owner and target. Channel access methods and frame exchange sequences are out of scope of this specification; unused time should be released for PCA. | 17.4.1.4 |
| PCA | Reserves time for PCA. No device has preferential access. | 17.4.1.5 |

#### 17.4.1.1 Alien BP reservations

A device shall announce an alien BP reservation to protect alien BPs as described in 17.2.6. A device shall not transmit frames during an alien BP reservation except possibly to send a beacon in the alien BP.

#### 17.4.1.2 Hard reservations

In a hard reservation, devices other than the reservation owner and target(s) shall not transmit frames. Devices other than the reservation owner shall not initiate frame transactions. If there is remaining time in a reservation block that will not be used, the reservation owner and target(s) should release the reservation block by transmitting UDA and UDR frames as described in 17.4.9. A device may consider the remainder of a reservation block available, subject to other medium access rules, after it has received a UDA or UDR frame that releases the reservation block and the duration indicated in that received frame has expired.

A device shall not transmit a data or aggregated data frame in a hard reservation unless the Delivery ID field is set to a Stream Index that is the same as the Stream Index for the reservation and the DestAddr of the frame is the same as the Target DevAddr for the reservation or the DestAddr of the frame matches the DevAddr of any target of an established multicast reservation. A device may transmit any command or control frame in a hard reservation.

#### 17.4.1.3 Soft reservations

In a soft reservation, devices access the medium following PCA rules. The reservation owner may access the medium with the highest priority AIFS and without performing backoff. It may begin transmission at the beginning of each reservation block. It may initiate an additional frame transaction after any transaction it initiated but shall not initiate such a transaction later than pSIFS after the end of the previous frame transaction. The reservation owner shall not transmit a data or aggregated data frame without backoff unless the Delivery ID field is set to a Stream Index that is the same as the Stream Index for the reservation and the DestAddr of the frame is the same as the Target DevAddr for the reservation or the DestAddr of the frame matches the DevAddr of any target of an established multicast reservation. The reservation owner may transmit any command or control frame without backoff. neighbours of a reservation owner shall follow PCA rules to access the medium. neighbours of a reservation target that are not neighbours of the reservation owner shall not access the medium.



Copyright International Organization for Standardization
Provided by IHS under license with ISO
No reproduction or networking permitted without license from IHS
Not for Resale

#### 17.4.1.4 Private reservations

The channel access method and frame exchange sequences used during a private reservation are out of the scope of this Standard. A device shall use standard frame formats and frame type and frame subtype field values in frames transmitted within a private reservation. In a private reservation, devices other than the reservation owner and target(s) shall not transmit frames. If there is remaining time unused during a reservation block, the reservation owner and target(s) should release the reservation block by transmitting UDA and UDR frames. A device may consider the remainder of the reservation block available, subject to other medium access rules, after it has received a UDA or UDR frame that releases the reservation block and the duration indicated in that received frame has expired, as described in 17.4.9.

#### 17.4.1.5 PCA reservations

During a PCA reservation, any device may access the medium using PCA rules.

### 17.4.2 Medium access

A device shall not transmit a unicast frame within a reserved MAS in a hard, soft, or private reservation in the current superframe unless:

- it included a DRP IE with the Reservation Status bit set to ONE that included that MAS in its beacon in the previous superframe;
- the destination device is a neighbour; and
- the most-recently received beacon from the destination device included a DRP IE with the Reservation Status bit set to ONE that included that MAS.

A device shall not transmit a multicast frame within a reserved MAS in a hard, soft, or private reservation in the current superframe unless:

- it included a DRP IE with the Reservation Status bit set to ONE that included that MAS in its beacon in the previous superframe;

### 17.4.3 DRP availability IE

The DRP Availability IE identifies the MASs where a device is able to establish a new DRP reservation.

The combination of information from DRP Availability IEs and DRP IEs allows an owner to determine an appropriate time for a new DRP reservation. In order to facilitate the DRP negotiation process, devices that are aware of existing neighbours' DRP reservations should mark the reserved MASs as unavailable.

A device should mark a MAS unavailable if the device includes it in a DRP IE with the Reservation Status bit set to ONE. It should mark a MAS unavailable if a neighbour includes it in a DRP IE with a target other than the device, whether the Reservation Status bit is ZERO or ONE. It shall mark a MAS unavailable if any BP occupies any portion of that MAS, based on information in any beacon received in the latest mMaxLostBeacons+1 superframes.

### 17.4.4 DRP reservation negotiation

There are two mechanisms used to negotiate a reservation: explicit and implicit. For explicit negotiation, the reservation owner and target use DRP Reservation Request and DRP Reservation Response command frames to negotiate the desired reservation. For implicit negotiation, the reservation owner and target use DRP IEs transmitted in their beacons. For either negotiation mechanism, the reservation owner completes the negotiation by including an appropriate DRP IE in its beacon.

A device shall not negotiate for MASs that are included in a DRP IE received from a neighbour or any other DRP IE included in the device's beacon, unless the MASs are referenced only in a DRP IE with Reason Code set to Denied.

DRAFT ECMA-368



Copyright International Organization for Standardization
Provided by IHS under license with ISO
No reproduction or networking permitted without license from IHS
Not for Resale

A device shall announce in the MAC Capabilities IE in its beacon whether it is capable of explicit DRP negotiation. A device shall not initiate an explicit DRP negotiation with devices that do not support it.

A device shall only initiate negotiation for a reservation as the reservation owner.

For reservations of type Alien BP, there is no negotiation with neighbours. A device shall include the appropriate DRP IE with Reservation Status set to ONE on detection of an alien BP, as specified in 17.2.6.

For reservations of type PCA, there is no negotiation with neighbours. A device may select any available MAS to include in a reservation of type PCA. The device shall not set the Reservation Status bit to ONE in a PCA reservation unless it included a DRP IE in its beacon in the previous superframe that identified the same MASs, with Reservation Type set to PCA and Reservation Status set to ZERO or ONE.

#### 17.4.4.1 Negotiation

When negotiating a reservation, the reservation owner shall set the Target/Owner DevAddr field of the DRP IE to the DevAddr of the reservation target. It shall set the Reservation Status bit to ZERO and the Reason Code to Accepted in the DRP IE. For new streams, the Stream Index shall be set to a value that is currently not used with this Target DevAddr and has not been used as such for mMaxLostBeacons+1 superframes. To negotiate additional MASs for an existing stream, the Stream Index shall be set to the value used for the existing stream.

When negotiating a reservation, a reservation target shall set the Target/Owner DevAddr field of the DRP IE to the DevAddr of the reservation owner. If a unicast reservation is granted, it shall set the Reservation Status bit to ONE and the Reason Code to Accepted. If a multicast reservation is granted, it shall set the Reservation Status bit to the same value included in the DRP IE by the reservation owner, and shall set the Reason Code to Accepted. If the reservation is not granted, it shall set the Reservation Status bit to ZERO. If the reservation cannot be granted due to a conflict with its own or its neighbours' reservations, the reservation target shall set the Reason Code to Conflict. If the reservation is not granted, it shall set the Reason Code to Denied. If the reservation target cannot grant the reservation immediately, it may set the Reason Code to Pending, and deliver a final response later. For a unicast reservation, the reservation target shall set the DRP Allocation fields to match those in the request. For a multicast reservation, it shall set the DRP Allocation fields to match the request, or to include a subset of the MASs included in the request.

#### 17.4.4.2 Explicit negotiation

To start explicit DRP negotiation, the reservation owner shall send a DRP Reservation Request command frame to the target device, as defined in 16.5.1.

On reception of a DRP Reservation Request command the reservation target shall send a DRP Reservation Response command, as defined in 16.5.2, to the reservation owner. The fields in the DRP IE shall be set according to 17.4.4.1. If the reservation cannot be granted due to a conflict with its own or its neighbours' reservations, the reservation target shall include a DRP Availability IE in the DRP Reservation Response command frame.

In a DRP Reservation Response command frame for a multicast reservation, the reservation target shall include a DRP Availability IE for a Reason Code other than Denied. Final multicast reservations are established implicitly, as described in 17.4.4.3.

#### 17.4.4.3 Implicit negotiation

Implicit negotiation is carried out by transmitting DRP IE(s) in beacon frames. A device that supports the DRP shall parse all beacons received from neighbours for DRP IE(s) whose Target/Owner DevAddr field matches either the device's DevAddr or a multicast



Copyright International Organization for Standardization
Provided by IHS under license with ISO
No reproduction or networking permitted without license from IHS
Not for Resale

DevAddr for which the device has activated multicast reception. From this initial selection, the device shall process the DRP IE(s) that are new with respect to DRP IE(s) included in the most recently received beacon from the same device as a DRP reservation request or a DRP reservation response.

To start implicit negotiation, a reservation owner shall include a DRP IE that describes the proposed reservation in its beacon. The device should continue to include the DRP IE for at least mMaxLostBeacons+1 consecutive superframes or until a response is received.

On reception of a unicast DRP reservation request in a beacon, the reservation target shall include a DRP reservation response in its beacon no later than the next superframe, with fields set as described in 17.4.4.1. If the Reason Code indicates Conflict, the reservation target shall include a DRP Availability IE in its beacon.

As long as the reservation owner includes a unicast DRP reservation request in its beacon, the reservation target shall continue to include the DRP reservation response in its beacon. The reservation target shall not change the Reservation Status bit to ONE if there is a reservation conflict with its neighbours.

On reception of a multicast DRP reservation request, a reservation target shall include a reservation response DRP IE in its beacon no later than the next superframe if it is a member of the targeted multicast group. The fields in the DRP IE shall be set according to 17.4.4.1. If the Reservation Status bit in the response is ZERO, the reservation target shall include a DRP Availability IE in its beacon unless the Reason Code is set to Denied.

A device that elects to receive traffic in an already established multicast reservation does not negotiate the reservation. To join an established multicast reservation that does not conflict with other existing reservations, a device shall include corresponding DRP IE(s) in its beacon with Reservation Status bit set to ONE and Reason Code set to Accepted.

A device that cannot join an established multicast reservation because of an availability conflict may inform the source by including the corresponding DRP IE(s) in its beacon with Reservation Status bit set to ZERO, and the Reason Code set to Conflict. The device shall also include the DRP Availability IE in the beacon.

#### 17.4.4.4 Negotiation conclusion

To conclude negotiation for a unicast reservation, the reservation owner shall set Reservation Status to ONE in the DRP IE in its beacon after receiving a beacon from the reservation target that contains a corresponding DRP IE with Reservation Status set to ONE. To conclude negotiation for a multicast reservation, the reservation owner may set Reservation Status to ONE in a DRP IE in its beacon in the next superframe after transmitting the same DRP IE with Reservation Status set to ZERO, regardless of responses from potential multicast recipients. If a reservation conflict exists, the reservation owner shall not set the Reservation Status bit to ONE except as specified in 17.4.6.

### 17.4.5 DRP reservation announcements

Once negotiation for a reservation successfully completes, the reservation owner and target shall include DRP IE(s) in their beacons that describe the reservation. Within each DRP IE, the Reason Code shall be set to Accepted and the Reservation Status bit shall be set to ONE. The devices shall include the DRP IEs in each beacon transmitted until the reservation is modified or terminated.

### 17.4.6 Resolution of DRP reservation conflicts

Devices engaged in independent DRP negotiation could attempt to reserve the same MAS, or due to mobility, devices could have reserved the same MAS. A conflict exists between



Copyright International Organization for Standardization
Provided by IHS under license with ISO
No reproduction or networking permitted without license from IHS
Not for Resale

DRP reservations if a MAS is included in both reservations. A device might detect a conflict during a DRP negotiation or after a reservation has been established. Reservations of type Alien BP never conflict with other reservations of type Alien BP. Reservations of type PCA never conflict with other reservations of type PCA.

A device shall apply the following rules to a conflict between a DRP IE included in its beacon and another DRP IE included by a neighbour, unless the neighbour's DRP IE Owner/Target DevAddr field identifies the device, or the neighbour's DRP IE has the same Stream Index, Reservation Type, Owner, and Owner/Target DevAddr fields as the device's DRP IE and the device's DRP IE is in response to a multicast reservation:

1) If the device's reservation is of type Alien BP, the device shall maintain the reservation.

2) If the neighbour's reservation is of type Alien BP, the device shall not transmit frames in conflicting MASs in the following superframe. If the device is the reservation target, it shall also set the Reason Code in its DRP IE to Conflict in its beacon in the following superframe.

3) If the device's DRP IE has the Reservation Status bit set to ZERO and the neighbour's DRP IE has the Reservation Status bit set to ONE, the device shall not set the Reservation Status bit to ONE and shall not transmit frames in conflicting MASs. If the device is the reservation target, it shall also set the Reason Code in its DRP IE to Conflict.

4) If the device's DRP IE has the Reservation Status bit set to ONE and the neighbour's DRP IE has the Reservation Status bit set to ZERO, the device may maintain the reservation.

5) If the device's DRP IE and neighbour's DRP IE have the Reservation Status bit set to the same value and one of the following conditions is true, the device may maintain the reservation.

    a) The device's DRP IE and neighbour's DRP IE have the Conflict Tie-breaker bit set to the same value and the device's occupied beacon slot number is lower than the beacon slot number of the neighbour; or

    b) The device's DRP IE and neighbour's DRP IE have the Conflict Tie-breaker bit set to different values and the device's occupied beacon slot number is higher than the beacon slot number of the neighbour.

6) If the device's DRP IE and neighbour's DRP IE have the Reservation Status bit set to ZERO and one of the following conditions is true, the device shall not set the Reservation Status bit to ONE. If the device is the reservation target, it shall set the Reason Code in its DRP IE to Conflict.

    a) The device's DRP IE and neighbour's DRP IE have the Conflict Tie-breaker bit set to the same value and the device's occupied beacon slot number is higher than the beacon slot number of the neighbour; or

    b) The device's DRP IE and neighbour's DRP IE have the Conflict Tie-breaker bit set to different values and the device's occupied beacon slot number is lower than the beacon slot number of the neighbour.

7) If the device's DRP IE and neighbour's DRP IE have the Reservation Status bit set to ONE and one of the following conditions is true, the device shall not transmit frames in conflicting MASs in the following superframe. It shall remove the conflicting MASs from the reservation or set the Reservation Status to ZERO in its beacon in the following superframe. If the device is the reservation target, it shall also set the Reason Code in its DRP IE to Conflict.



Copyright International Organization for Standardization
Provided by IHS under license with ISO
No reproduction or networking permitted without license from IHS
Not for Resale

a) The device's DRP IE and neighbour's DRP IE have the Conflict Tie-breaker bit set to the same value and the device's occupied beacon slot number is higher than the beacon slot number of the neighbour; or

b) The device's DRP IE and neighbour's DRP IE have the Conflict Tie-breaker bit set to different values and the device's occupied beacon slot number is lower than the beacon slot number of the neighbour.

When a reservation owner withdraws a reservation or part of a reservation due to a conflict, it shall invoke a backoff procedure prior to requesting additional MASs in any reservation. The device shall initialize the backoff window BackoffWin to mDRPBackoffWinMin. When the backoff algorithm is invoked, the device shall select a random number N uniformly from [0, BackoffWin-1]. The device shall not request additional MASs for N superframes. If a further negotiation fails due to a conflict, the device shall double BackoffWin, up to a maximum of mDRPBackoffWinMax. After a negotiation completes, the device shall generate a new backoff N. If a device does not request any MASs for 4×BackoffWin superframes, the device may terminate this backoff procedure and request MASs at any time unless another conflict occurs.

If a reservation target sets Reason Code to Conflict in any DRP IE in its beacon, it shall include a DRP Availability IE in the same beacon.

### 17.4.7 BPST realignment and existing DRP reservations

A device that realigns its BPST as described in 17.2.6 may assert new DRP reservations with Reservation Status bits set to ONE in the new beacon so long as they are equivalent to its old DRP reservations with the Reservation Status bit set to ONE in the prior BP. For this purpose, two DRP reservations are equivalent if their target and owner are the same, their corresponding Stream Index and Reservation Type fields are the same and the number of MASs claimed by the new reservation is less than or equal to the number claimed by the old reservation.

A device that realigns its BPST shall not assert DRP reservations with MASs that conflict with any BP it announced or detected. The device shall not assert DRP reservations with MASs that conflict with reservations with Reservation Status equal to one announced in the new BP unless no other MASs are available. Any conflict with existing reservations shall be resolved according to the procedures specified in 17.4.6.

### 17.4.8 Modification and termination of existing DRP reservations

A reservation owner may reserve additional MASs for a stream by negotiating an addition to the reservation using a DRP IE with the same Target/Owner DevAddr, Stream Index, and Reservation Type. Once negotiation has completed successfully, the reservation owner should combine the DRP IEs. When combining DRP IEs, the reservation owner shall set the Reason Code to Modified until a DRP IE is received from the reservation target that describes the combined reservation.

A reservation owner may remove MASs from an established reservation without changing the Reservation Status bit in the DRP IE. If a reservation owner removes some MASs from an established reservation, it shall set the Reason Code in its DRP IE to Modified until the reservation target has changed its DRP IE to match.

A reservation target may remove MASs from an established reservation without changing the Reservation Status bit in the DRP IE due to a conflict, as described in 17.4.6 or due to reception of a Relinquish Request IE. If the reservation target is unicast, the reservation owner shall remove the same MASs from the reservation or terminate the reservation in the current or following superframe.

To terminate a reservation, the reservation owner shall remove the DRP IE from its beacon.



Copyright International Organization for Standardization
Provided by IHS under license with ISO
No reproduction or networking permitted without license from IHS
Not for Resale

If a reservation owner changes or removes a DRP IE, the reservation targets shall update or remove the corresponding DRP IE from their beacons in the current or following superframe. This also permits a reservation owner and target that decide to modify or drop a reservation through other means to modify or remove the relevant DRP IEs from their beacons in the same superframe.

To terminate a reservation, a reservation target shall set the Reservation Status bit to ZERO and the Reason Code to an appropriate value, as if responding to an initial reservation request. The reservation owner shall terminate the corresponding reservation or set the corresponding Reservation Status bit to ZERO in the current or following superframe.

If a reservation owner or target does not receive a beacon or any other frame from the other participant in the reservation for more than mMaxLostBeacons superframes, it shall consider the reservation terminated, and shall remove the corresponding DRP IE(s) from its beacon.

### 17.4.9 Release of hard or private DRP reservation blocks

If time remains in a hard or private DRP reservation block after a reservation owner completes transmission of associated buffered traffic, it should release the reservation block by sending a UDA frame. If the remaining time in the reservation block is not sufficient for the exchange of UDA and UDR control frames, no action should be taken. The transmitter of the UDA control frame shall include a list of device(s) that shall respond to this announcement. The list should consist of those devices that have previously included the corresponding DRP IE(s) in their beacons. The order in which the DevAddrs of the devices are mentioned in the list is the order in which they shall respond with a UDR control frame. This allows devices around the transmitter as well as the devices in the list to be informed about the early end of the reservation block.

On reception of a UDA control frame that includes its DevAddr in the device list, a device should respond with a UDR control frame. A device shall transmit a UDR control frame after a delay given by:

*Time to send Response = pSIFS + pSlotTime + (Position_in_list_in_UDA) × (UDR_control_frame_duration + pSIFS)*

Time to send Response is calculated from the end of reception of the UDA control frame. Possible values of Position_in_list_in_UDA are in the range [0, N-1], inclusive.

UDA and UDR control frames release the time between the end of PLCP header of the last UDR control frame, as indicated by the Duration value in the MAC header of UDA and UDR control frames, and the end of the reservation block. Other MASs described by the reservation that do not belong to the current reservation block, either in the same superframe or following superframes, are not released.

The Duration value in the UDA control frame shall cover the UDA control as well as all expected UDR control frames. The Duration value in the UDR control frames shall be set to the Duration value in the UDA control frame minus the time between the end of the PLCP header of the UDA control frame and the end of the respective UDR control frame. This value is given by the following equation:

*Duration value in UDR = Duration value in UDA - (UDA_frame_body_transmission_time + pSIFS + pSlotTime + (Position_in_list_in_UDA) × (UDR_control_frame_transmission_time + pSIFS)) - UDR_control_frame_transmission_time.*

### 17.4.10 Retransmit procedures in DRP reservations

In a hard DRP reservation block, if the reservation owner transmits a frame with ACK Policy set to Imm-ACK or B-ACK, but does not receive the expected acknowledgement



Copyright International Organization for Standardization
Provided by IHS under license with ISO
No reproduction or networking permitted without license from IHS
Not for Resale

frame, it may retransmit the frame within the same reservation block if the reservation block has not been released.

In a soft DRP reservation block, the reservation owner may retransmit a frame with no backoff, as described in 17.4.1.3. Devices other than the reservation owner that retransmit frames in a soft DRP reservation block shall follow the PCA rules defined in 17.3.

A device shall not retransmit a frame earlier than pSIFS after the end of an expected acknowledgement or CTS frame, whether or not it receives the expected frame. A device shall not retransmit a frame in the current reservation block if there is not enough time remaining in the reservation block for the entire frame transaction.

## 17.5 Synchronization of devices

Each device shall maintain a beacon period start time (BPST). The device shall derive all times for communication with its neighbours based on the current BPST. The device shall adjust its BPST in order to maintain superframe synchronization with its slowest neighbour. A device shall synchronize with such a device before it sends its first beacon.

When a device receives a beacon from a neighbour, the device determines the difference between the beacon's actual reception time and the expected reception time. The beacon's actual reception time is an estimate of the time that the start of the beacon preamble arrived at the receiving device's antenna. The expected reception time is determined from the Beacon Slot Number field of the received beacon and the receiving device's BPST. If the difference is positive, then the neighbour is slower. In order to maintain superframe synchronization with a slower neighbour, the device shall delay its BPST by the difference, but shall limit the adjustment to a maximum of mMaxSynchronizationAdjustment per superframe. This might require adjustment of its BPST in multiple superframes, based on the latest BPST observed via any beacon received from a neighbour in the last mMaxLostBeacons+1 superframes. A device must consider its own sampling and round-off error in calculating the BPST difference, and shall ensure that the BPST it indicates via its beacon is not later than the known or estimated BPST of its slowest neighbour in the previous superframe. The adjustment to BPST may occur at any time following the detection of a slower device, but shall be done before the end of the superframe.

A device shall not use a beacon with the Signaling Slot bit set for synchronization.

If a device does not receive a beacon from a neighbour, the device may use historical measurements to estimate the impact on superframe synchronization and increment its BPST accordingly. This estimate may be applied for up to mMaxLostBeacons consecutive superframes.

Beacon transmit time and measured beacon receive time shall be accurate to at least mClockResolution.

### 17.5.1 Clock accuracy

MAC sublayers shall maintain a clock at least as accurate as mClockAccuracy. All time measurements, such as MAS boundary and frame reception time measurements, shall be measured with a minimum resolution of mClockResolution.

### 17.5.2 Synchronization for devices in hibernation mode

Devices in hibernation mode may become unsynchronized beyond the mGuardTime value during hibernation. Prior to returning to active mode and sending a beacon, a device in hibernation mode shall wake up at least one superframe plus the maximum possible drift during its hibernation, and shall realign its BPST to its slowest neighbour without regard to the mMaxSynchronizationLimit.

### 17.5.3 Guard times

Due to inaccuracies in superframe synchronization and drift between synchronization events, MAS start times for different devices are not synchronized perfectly. To ensure a



Copyright International Organization for Standardization
Provided by IHS under license with ISO
No reproduction or networking permitted without license from IHS
Not for Resale

full SIFS interval between transmissions in adjacent MASs, the devices shall maintain at least a SIFS interval and guard interval at the end of a reservation block. Guard times apply to all boundaries of DRP reservation blocks and BPs.

Figure 105 is an illustration of how a device uses the guard interval to maintain a SIFS interval between transmissions in adjacent reservation blocks.

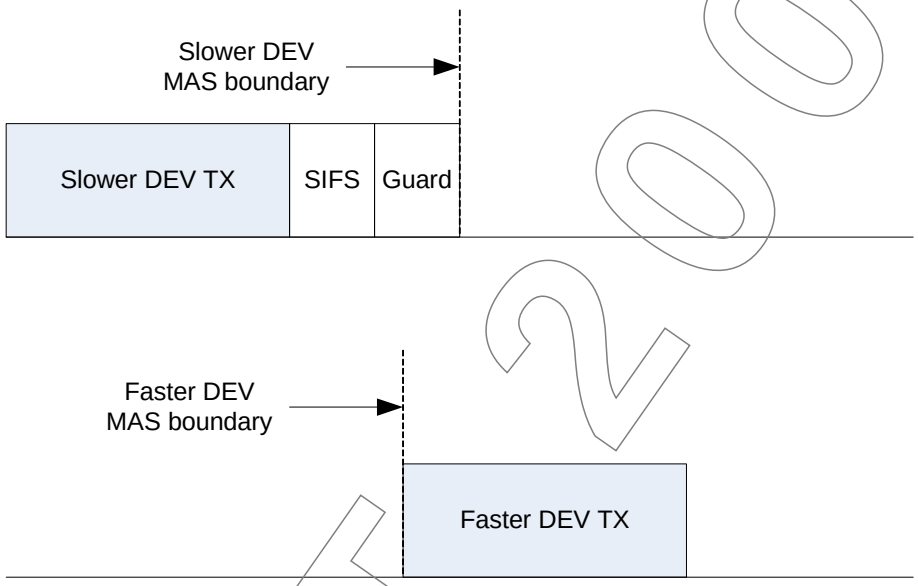


*Figure 105 - Guard Time*

The length of the guard interval, mGuardTime, depends on the maximum difference between devices' MAS boundary times. The difference arises from synchronization error and drift. The guard time is determined as follows:

*mGuardTime = MaxSynchronizationError + MaxDrift,*

where MaxSynchronizationError is the worst case error in superframe synchronization and MaxDrift is the worst case drift.

Synchronization is achieved during the BP as described in 17.5. For purposes of determining guard time, MaxSynchronizationError is calculated as twice mClockResolution.

Drift is a function of the clock accuracy and the time elapsed (SynchronizationInterval) since a synchronization event. The maximum drift, MaxDrift, is calculated using the worst case value for clock accuracy, mClockAccuracy, and the longest SynchronizationInterval:

*MaxDrift = 2 × mClockAccuracy (ppm) × 1E-6 × SynchronizationInterval,*

where

*SynchronizationInterval = (mMaxLostBeacons+1) × mSuperframeLength.*

Propagation delay will also affect timing uncertainty, but in a short-range network propagation delays are small. At 10 m range, the propagation delay is around 33 ns. This is much smaller than mClockResolution and it is ignored in calculating the length of the guard interval.

A device transmitting in a reservation block may start transmission of the preamble for the first frame at the point where it calculates the start of the reservation block to be based on its local clock. For frames that use No-ACK or B-ACK acknowledgement policy, the transmitting device shall ensure that there is enough time remaining in the reservation



Copyright International Organization for Standardization
Provided by IHS under license with ISO
No reproduction or networking permitted without license from IHS
Not for Resale

block to transmit the frame and allow for a SIFS plus mGuardTime before the end of the reservation block as calculated by that device.

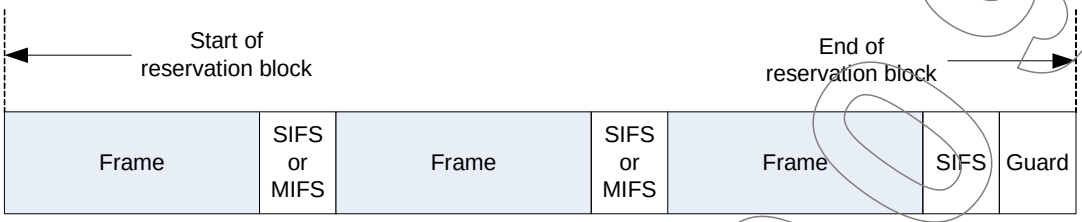


*Figure 106 - SIFS and guard time in a DRP reservation block - No-ACK*

If Imm-ACK is used, or a B-ACK is requested by the last frame, the transmitting device shall also ensure there is enough time for a SIFS interval, the ACK, another SIFS interval, and the guard time, as defined in Figure 107.

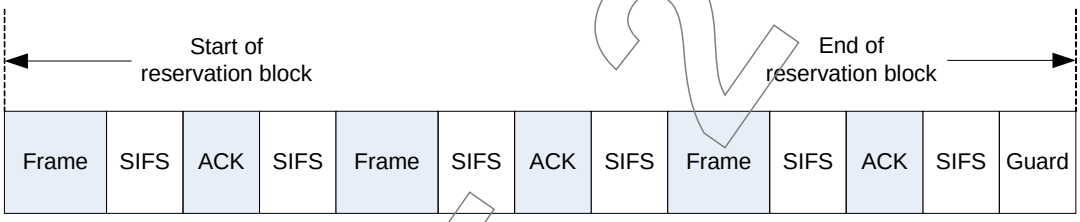


*Figure 107 - SIFS and Guard Time in a DRP reservation block - Imm-ACK*

A device shall be able to receive a frame that is transmitted within the bounds of allowable transmission, accounting for the worst case drift. A device shall begin listening mGuardTime prior to the start of a DRP reservation block, the start of a BP, or the start of a MAS in which the device announced it would be available.

## 17.6 Fragmentation and reassembly

A source device may fragment each MSDU/MCDU.

A device shall not fragment any MSDU/MCDU to more than mMaxFragmentCount fragments. Fragments may be of varying sizes. Once a device transmits a frame containing a whole MSDU/MCDU or a fragment thereof, the device shall not fragment or refragment the frame. The device shall not create frame fragments smaller than mMinFragmentSize.

The device shall set the Fragment Number field in the first fragment to zero. It shall set each subsequent fragment to the Fragment Number field in the previous fragment plus one. The device shall not increment the Fragment Number field when a fragment is retransmitted.

A device shall assign the same Sequence Number to all fragments of an MSDU/MCDU.

The device shall completely reassemble an MSDU/MCDU in the correct order before delivery to the MAC client. The device shall discard any MSDU/MCDU with missing fragments. If the No-ACK policy is used, the recipient device shall discard an MSDU/MCDU immediately if a fragment is missing. Otherwise, a recipient device shall discard the fragments of an MSDU if the MSDU is not completely received within an implementation-dependent timeout.

If B-ACK is used, unacknowledged fragments from multiple MSDUs belonging to the same stream may be retransmitted in the same sequence. In this case it is the responsibility of the recipient device to deliver the MSDUs in the correct order to the MAC client.

If a source device discards a fragment of an MSDU/MCDU, the device shall discard all fragments of the MSDU/MCDU.



Copyright International Organization for Standardization
Provided by IHS under license with ISO
No reproduction or networking permitted without license from IHS
Not for Resale

## 17.7 Aggregation

A transmitter may aggregate multiple MSDUs with identical Delivery ID into a single frame payload. A device shall aggregate no more than mAggregationLimit MSDUs into an aggregated data frame.

A single MAC header is associated with an aggregated payload and it shall apply equally to each MSDU in the aggregated payload. In terms of acknowledgement and retransmission, both the transmitter and receiver shall treat the aggregated payload as a single indivisible entity. On receiving an aggregated data frame, the recipient shall deliver MSDUs from the aggregated payload to its MAC client maintaining the ordering from the payload.

The aggregated MSDUs shall be aligned on 4-octet boundaries. Prior to each MSDU, 0 to 3 pad octets shall be inserted such that the MSDU starts on a 4-octet boundary.

## 17.8 Acknowledgement policies

This Clause defines three acknowledgement policies: no acknowledgement (No-ACK), immediate acknowledgement (Imm-ACK) and block acknowledgement (B-ACK).

A device shall acknowledge all received unicast frames with the ACK Policy field set to Imm-ACK, B-ACK or B-ACK Request and the DestAddr field set to the DevAddr of this device. The device shall acknowledge the reception without regard to security validation. A device that receives a frame with a higher Protocol Version than it supports shall discard the frame without acknowledgement.

### 17.8.1 No-ACK

A frame with ACK policy set to No-ACK, as defined in 16.2.1.3, shall not be acknowledged by the recipient. The transmitting device MAC sublayer assumes the frame has been successfully transmitted and proceeds to the next frame upon completion of current frame. All broadcast and multicast frames shall have ACK Policy set to No-ACK.

### 17.8.2 Immediate ACK

On reception of a frame with ACK Policy set to Imm-ACK, a device shall respond with an Imm-ACK frame, as defined in 16.4.1**,** transmitted pSIFS after the end of the received frame.

### 17.8.3 Block ACK

The B-ACK mechanism allows a source device to transmit multiple frames and to receive a single acknowledgement frame from the recipient indicating which frames were received and which need to be retransmitted.

A source device initiates the use of the B-ACK mechanism with a recipient device for frames either from the same stream or of the same user priority. If the recipient device accepts use of the B-ACK mechanism, it indicates the maximum number and size of the frames it can buffer. The source device transmits a sequence of frames to the recipient, each from the same stream or of the same user priority, limited by the announced buffer size and maximum number of frames. The initial frames in the sequence are all transmitted with ACK Policy set to B-ACK. The final frame in the sequence is transmitted with ACK Policy set to B-ACK Request. On receipt of such a frame, the recipient device returns a B-ACK frame giving feedback on the frames received and indicating the buffer space available for the next B-ACK sequence.

A source device may invoke multiple instances of the B-ACK mechanism with the same recipient device, each for a different stream or user priority. A source device may also invoke the B-ACK mechanism with multiple recipient devices.

#### 17.8.3.1 Initiation

A source device may activate the B-ACK mechanism independently for any stream or user priority traffic to any potential recipient device advertising B-ACK capability in its



Copyright International Organization for Standardization
Provided by IHS under license with ISO
No reproduction or networking permitted without license from IHS
Not for Resale

MAC Capabilities IE. A source device shall initiate use of the B-ACK mechanism by transmitting a frame with ACK Policy set to B-ACK Request to the recipient device. A source device shall use a dedicated Sequence Number counter for each stream or user priority traffic using the B-ACK mechanism with a recipient. After transmitting the frame, the source device shall follow the rules of operation as described in 17.8.3.2.

When receiving a frame with ACK Policy set to B-ACK Request from a source device for a stream or user priority traffic not currently using the B-ACK mechanism, the recipient device shall respond as follows:

- To acknowledge receipt of the frame but reject the request for starting a new instance of B-ACK mechanism, the recipient device shall respond with a B-ACK frame with no frame payload.
- To accept the request for starting a new instance of B-ACK mechanism, the recipient device shall respond with a B-ACK frame with a frame payload indicating the allowed maximum size (in frames and octets) for the next B-ACK sequence. The recipient shall acknowledge the received frame by indicating its reception in the acknowledgement window.

A recipient device may also accept a request to use the B-ACK mechanism even if the request frame has an invalid FCS. To accomplish this, the recipient device shall respond with a B-ACK frame with a frame payload that indicates the allowed maximum size for the next B-ACK sequence, but without acknowledgement of the frame with the invalid FCS.

A recipient device, even though it advertises B-ACK capability in its MAC Capabilities IE, may reject a request to use the B-ACK mechanism for any reason, including a temporary unavailability of resources or a lengthy setup process requiring a delayed start time. Thus, after being rejected, a source device may keep trying to initiate use of the B-ACK mechanism by sending the next frame with ACK Policy set to B-ACK Request.

#### 17.8.3.2 Operation

After transmitting a frame with ACK Policy set to B-ACK Request, the source device expects to receive a B-ACK frame in response and takes one of the following actions:

- If the source device does not receive a B-ACK frame, it shall assume that the recipient device did not receive the request frame. To continue B-ACK operation, the source device shall retransmit the request frame with the same ACK Policy using applicable medium access rules as described in 17.3 and 17.4.
- If the source device receives a B-ACK frame with no frame payload, it shall treat the transmitted frame as received and consider this use of the B-ACK mechanism to be terminated. The B-ACK provides no acknowledgement of any other frames.
- If the source device receives a B-ACK frame with a frame payload and with either Frame Count or Buffer Size set to zero, it shall process the acknowledgement as described below. To continue the B-ACK operation, the source device shall retransmit the requesting frame with the same ACK Policy, independently of whether the frame was indicated as received or not. If the requesting frame was indicated as received, the source device alternatively may transmit a zero-length payload frame with the same Sequence Control and Delivery ID to the recipient device.
- If the source device receives a B-ACK frame with a frame payload containing non-zero values for both Frame Count and Buffer Size, then it shall process the acknowledgement as described below. To continue the B-ACK operation, the source device shall send frames with ACK Policy set to B-ACK or B-ACK Request as described below.

DRAFT



Copyright International Organization for Standardization
Provided by IHS under license with ISO
No reproduction or networking permitted without license from IHS
Not for Resale

The source device processes the B-ACK frame acknowledgement as follows:

- Frames being held for retransmission with a sequence number earlier than the one indicated by the Sequence Control field were not received in the last B-ACK sequence, but shall not be retransmitted.
- Frames being held for retransmission with sequence and fragment number within the acknowledgement window (specified by the Sequence Control field and the Frame Bitmap field) with corresponding bit set to ONE were received and shall not be retransmitted.
- Other frames being held for retransmission shall be retransmitted within the next mMaxBlockACKSequences sequences, ordered by increasing sequence and fragment numbers, unless the frames will never be retransmitted.

After receiving a B-ACK frame with non-zero values for Frame Count and Buffer Size, the source device may transmit a sequence of frames. Each sequence of frames shall consist of zero or more frames with ACK Policy set to B-ACK followed by a single frame with ACK Policy set to B-ACK Request. The total number of frames must not exceed the Frame Count value specified in the B-ACK frame and the sum of the lengths of the frame payloads shall not exceed the Buffer Size value specified in the B-ACK frame. The sequence of frames may be transmitted in multiple PCA TXOPs or DRP reservation blocks and may be interleaved with frames to other recipients or of other streams or user priorities, subject to all the medium access rules. Within a sequence, the frames shall be ordered by increasing sequence and fragment numbers. Due to retransmissions, this ordering might not hold from one sequence to the next and frames transmitted within a sequence might not have consecutive sequence and fragment numbers.

When the recipient device receives a frame with ACK Policy set to B-ACK Request, it shall respond using SIFS with a B-ACK frame. To continue operation, the B-ACK frame shall contain a frame payload. If the recipient device receives a frame with a valid HCS but an invalid FCS and with ACK Policy set to B-ACK Request, the device shall also respond with a B-ACK frame with a frame payload. Within the B-ACK frame payload, the recipient device shall set the Frame Count and Buffer Size fields to limit the size of the next sequence of frames. It shall also set the Sequence Control and Frame Bitmap fields to indicate to the source device which frames should be retransmitted.

A recipient device may implement a timeout that indicates when to stop waiting for missing frames, allowing some MSDUs to be released to the MAC client and B-ACK buffer resources to be freed. A recipient device may also implement a timeout to expire an instance of the B-ACK mechanism that appears to be inactive.

#### 17.8.3.3 Termination

To terminate use of the B-ACK mechanism, the source device shall transmit a frame from the appropriate stream or of the appropriate user priority to the recipient device with ACK Policy set to anything other than B-ACK or B-ACK Request.

The recipient device may terminate use of the B-ACK mechanism by responding to a frame with ACK Policy set to B-ACK Request with a B-ACK frame with no frame payload. To terminate cleanly, a recipient device should send one or more B-ACK frames with the Frame Count field set to one, so that the sending device can transmit remaining unacknowledged frames and receive acknowledgements for them.

## 17.9 Probe

The Probe IE and Application-specific Probe IE may be used in beacons and probe commands to request one or more IEs from the target device identified in the probe IE. Target devices are not required to respond with all requested IEs. If a target device supports the Probe command frame for one or more IEs, it shall set the Probe bit in its MAC Capabilities IE to ONE, or otherwise it shall set the bit to ZERO.



Copyright International Organization for Standardization
Provided by IHS under license with ISO
No reproduction or networking permitted without license from IHS
Not for Resale

A device shall include a MAC Capabilities IE or a PHY Capabilities IE in its beacon if it is the target of a Probe IE received in a beacon that includes the MAC Capabilities IE Element ID or the PHY Capabilities IE Element ID, respectively.

On reception of either probe IE in a beacon, a target device shall include a response in its beacon for the next mMaxLostBeacons superframes.

On reception of either probe IE in a Probe command frame, a target device should respond with a Probe command frame addressed to the sender within one superframe or include a response in its beacon for the next mMaxLostBeacons superframes.

In the Probe command frame or beacon, the target device shall include:

- A Probe IE, with Target DevAddr set to the DevAddr of the requestor, that includes no Requested Element IEs to reject the probe; or
- One or more requested IEs.

## 17.10 Dynamic channel selection

Dynamic channel selection is a process that allows a group of devices to change channels in a coordinated manner.

A device may initiate dynamic channel selection after it has performed a channel scan, as described in 17.2.3. If a device initiates dynamic channel selection, it shall include a Channel Change IE in its beacon sent in the current channel, as described in 16.8.5.

In a Channel Change IE, the device shall set the New Channel Number field to the number of the new channel. It shall set the Change Channel Count field to the remaining number of superframes before the device will move to another channel. In successive superframes, the Change Channel Count field should be decremented.

If the value set in the Change Channel Count field is zero, the device shall move to the new channel at the end of the current superframe.

On reception of the Channel Change IE, a device that also intends to change channels in a coordinated manner should include a Channel Change IE with the same field values in its beacon.

## 17.11 Multi-rate support

A device shall transmit beacons at pBeaconTransmitRate.

Devices shall transmit non-beacon frames only at data rates supported by the intended recipient, based on information from the recipient's PHY Capabilities IE.

A recipient device may use the Link Feedback IE to suggest the optimal data rate to be used by a source device, for example, to increase throughput and/or to reduce the frame error rate. The data rate in the Link Feedback IE should be interpreted as the maximum data rate that the source device should use for this particular link, for an acceptable frame error rate. The source device is not required to follow the recommendation. The method to determine the optimal data rate in the recipient is beyond the scope of this Standard.

## 17.12 Transmit power control

A device shall not transmit frames at a higher transmit power level than that used for its most-recently transmitted beacon.

A recipient device may recommend a transmit power level change to be used by a source device by including a Link Feedback IE in its beacon. A device that receives a Link Feedback IE is not required to change its transmit power level. The method to determine transmit power recommendations is out of the scope of this Standard, but the recipient device might use the signal to noise ratio, received signal strength, frame error ratio or other parameters to determine the transmit power change to recommend to the source device.



Copyright International Organization for Standardization
Provided by IHS under license with ISO
No reproduction or networking permitted without license from IHS
Not for Resale

## 17.13 Power management mechanisms

### 17.13.1 Power management modes

A device may be in one of two power management modes in each superframe:

- Active mode: the device will send and receive beacon(s) in the current superframe.
- Hibernation mode: the device will not send a beacon or other frames in the current superframe.

Before entering hibernation mode, a device shall announce in previous superframe(s) that it is entering hibernation mode.

### 17.13.2 Device power states

Active mode devices may be in one of two power states within a superframe:

- Awake: device is able to transmit and receive.
- Sleep: device does not transmit or receive.

A device that is changing from Sleep to Awake state and has a frame in queue to transmit using PCA shall perform CCA for mAccessDelay time, or until a frame header is received, before determining the medium state.

The value of mAccessDelay is equal to the time required to transmit one maximum length frame, transmitted at the lowest mandatory data rate, plus the time to transmit an Imm-ACK plus pSIFS.

### 17.13.3 Power state transitions

Active mode devices shall transition between Awake and Sleep states according to the following rules:

1) A device shall be in the Awake state mGuardTime prior to its BPST in every superframe to participate in the transmission and reception of beacons.
2) If a device has data traffic pending to be transmitted in DRP reservations in the current superframe, it shall be in Awake state prior to the start of each relevant DRP reservation block to start its transmission. The device may go into Sleep state for the rest of the reservation block if all the pending transmissions completed successfully. The device should release the DRP reservation block before entering Sleep state. A device shall set the More Frames bit to ZERO in the last frame it transmits during a reservation block.
3) If a device has data traffic pending to be transmitted via PCA in the current superframe, it shall signal its intent with a relevant TIM IE in its beacon. Once all of its transmissions are completed, the device may go into Sleep state for the rest of the superframe, subject to other rules in this Clause. A device shall set the More Frames bit to ZERO in the last frame it transmits to a particular recipient using PCA during a superframe.
4) If a device is expecting to receive transmissions from other devices in a DRP reservation block, as indicated in the beacons of those devices, it shall be in Awake state mGuardTime prior to the start of the reservation block for the reception of the planned transmission. It may go into Sleep state either at the end of the reservation block or when all the pending data has been received, as indicated by the More Frames bit. If the device receives a UDA frame, it shall not go into Sleep state until after transmitting a corresponding UDR frame.
5) If a device is expecting to receive transmissions from other devices via PCA, it may include a PCA Availability IE in its beacon and shall be in Awake state mGuardTime prior to the announced MASs. A device that does not include a PCA Availability IE in its beacon shall be in Awake state in all MASs available for PCA in the current

DRAFT 2009



Copyright International Organization for Standardization
Provided by IHS under license with ISO
No reproduction or networking permitted without license from IHS
Not for Resale

superframe. Once all pending data has been received, as indicated by the More Frames bit, the device may go into Sleep state for the rest of the superframe.

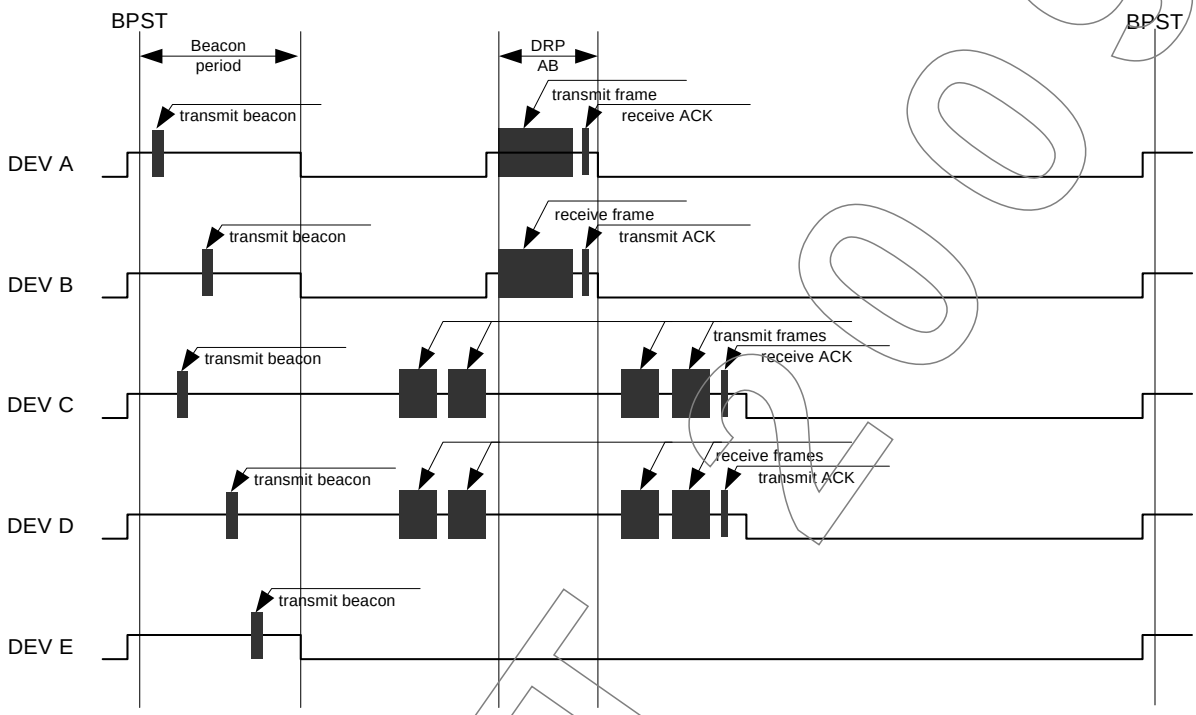


*Figure 108 - Power state transition for devices in active mode*

Figure 108 illustrates the power state transition for devices in active mode.

- DEV A is a device that has data traffic pending to be transmitted in a DRP reservation block in the current superframe.
- DEV B is a device that is expecting to receive a planned transmission from DEV A in a DRP reservation block in the current superframe.
- DEV C is a device that has data traffic pending to be transmitted via PCA in the current superframe.
- DEV D is a device that is expecting to receive a planned transmission from DEV C via PCA in the current superframe.
- DEV E is a device that does not have any traffic pending in its transmission queues, and is not expecting any planned transmission from other devices.

### 17.13.4 Hibernation mode operation

A device using hibernation mode shall operate according to the following rules:

- A device shall signal its intent to go into hibernation mode by including a Hibernation Mode IE in its beacon, as defined in 16.8.9. The Hibernation Duration field in the Hibernation Mode IE shall contain a non-zero value that specifies the duration of the hibernation period.

A device may signal its intent to go into hibernation mode in several superframes. The value of the Hibernation Countdown field in the Hibernation Mode IE shall be set to indicate the number of remaining superframes before the device enters hibernation mode. In each successive superframe, the device shall reduce the value of the Hibernation



Copyright International Organization for Standardization
Provided by IHS under license with ISO
No reproduction or networking permitted without license from IHS
Not for Resale

Countdown field by one. If this field is set to zero, the device enters hibernation mode at the start of the next superframe.

- When in hibernation mode, the device shall not send a beacon or other traffic. The device should terminate all established DRP reservations before entering hibernation.
- A device may leave hibernation mode prior to the end of its announced hibernation period by sending its beacon.
- A device in hibernation mode shall scan for beacons during the BP for one or more superframes immediately prior to the end of its hibernation period, in order to re-establish synchronization.
- If a device exiting hibernation mode finds that its former beacon slot is neither occupied (per Table 127) nor encoded as occupied (per Table 127) with a DevAddr not its own in the BPOIE of any beacon received by the device in the last superframe, the device may transmit a beacon in that beacon slot. Otherwise, the device shall transmit a beacon as if it were doing so for the first time.

Active mode devices in the presence of hibernation mode devices shall operate as follows:

- If an active mode device receives a neighbour's beacon that includes a Hibernation Mode IE, the device shall consider all DRP reservations with that neighbour to be terminated at the start of its hibernation period. An active mode device shall not commence any communication with a hibernation mode device until that device leaves hibernation mode. After receiving a beacon that includes a Hibernation Mode IE with Hibernation Countdown less than or equal to mMaxLostBeacons, an active mode device that misses the remaining expected beacons shall consider the device to be in hibernation mode as indicated in the Hibernation Mode IE.
- If a device does not receive a beacon from a neighbour at the end of the hibernation duration indicated in the neighbour's Hibernation Mode IE, it shall treat the neighbour's beacon slot as occupied, but shall not indicate it as occupied in its BPOIE, for up to mMaxHibernationProtection after the neighbour entered hibernation or until any beacon is received in the neighbour's beacon slot.

During a neighbour's hibernation period an active mode device shall continue to mark the hibernation mode device's beacon slot as occupied and non-movable in its BPOIE. If the active mode device receives another neighbour's beacon in the hibernation mode device's beacon slot, the device shall still advertise the hibernation mode device's DevAddr in its BPOIE.

- If an active mode device has unicast traffic for a hibernation mode device, it should buffer its traffic until the hibernation mode device enters active mode.
- If an active mode device has multicast or broadcast traffic it should not delay transmission of the traffic, even if it is aware that some intended recipients are in hibernation mode. It may buffer its multicast traffic for a hibernation mode device until the intended recipient enters active mode, and then deliver the buffered multicast data.

### 17.13.5 Hibernation anchor operation

Active mode devices that are capable of acting as a hibernation anchor should indicate hibernation anchor capability in its MAC Capabilities IE. A device that indicates such capability should include a Hibernation Anchor IE in its beacon to convey information about neighbours in hibernation mode. A device may terminate its role as a hibernation anchor at any time, but at that time it should remove indication of the capability from its MAC Capabilities IE.

Devices, such as those that were recently off or in hibernation mode, may not have information about the hibernation state of their neighbours. These devices may use the



Copyright International Organization for Standardization
Provided by IHS under license with ISO
No reproduction or networking permitted without license from IHS
Not for Resale

information provided by Hibernation Anchor IEs for scheduling communication with neighbours in hibernation mode.

Upon reception of a beacon containing a Hibernation Mode IE in which the Hibernation Countdown is set to zero, a hibernation anchor should include a Hibernation Anchor IE. It shall set the Wakeup Countdown field in the Hibernation Anchor IE based on the Hibernation Duration field in the received Hibernation Mode IE. It shall decrement the Wakeup Countdown field in each successive superframe until the field reaches zero. After it transmits a beacon with a Hibernation Anchor IE that contains a Hibernation Mode Device Information field with Wakeup Countdown set to zero, it shall remove the corresponding Hibernation Mode Device Information field from the Hibernation Anchor IE. It shall not include a Hibernation Anchor IE if there are no Hibernation Mode Device Information fields in the IE.

If the hibernation anchor receives a beacon from a hibernation mode device prior to the end of the announced hibernation duration, the hibernation anchor shall remove the corresponding Hibernation Mode Device Information field from the Hibernation Anchor IE in the next beacon.

After receiving a neighbour's beacon that includes a Hibernation Mode IE with Hibernation Countdown less than or equal to mMaxLostBeacons, a hibernation anchor device that misses the remaining beacons from the neighbour shall consider the device to be in hibernation mode as indicated in the Hibernation Mode IE and should include that device in the Hibernation Anchor IE.

## 17.14 ASIE operation

Zero or more ASIEs may be included in each beacon. ASIEs may appear within the IE area in a beacon as defined in 17.1.10. Unrecognized ASIEs shall be ignored. The format of the ASIE payload is defined by the owner of the value in the Specifier ID field (See Annex C) and is outside the scope of this document.

## 17.15 Range measurement operation

This Clause describes the support for cooperative two-way time transfer measurements.

The support of range measurement is optional. A device that is capable of initiating and participating in range measurements shall declare Range Measurement capability in its MAC Capabilities IE. A device shall not initiate a range measurement with a neighbour that does not declare it is capable of range measurement.

If the MAC sublayer is instructed to initiate one or more consecutive ranging measurements with a specified remote device, it shall use Range Measurement command frames as described in 16.5.6.

In order to perform a range measurement, the initiator device shall turn on the PHY range timer and send a Range command frame of type Range Measurement Request to the recipient device. The ACK Policy field shall be set to Imm-ACK in the Range command frames of type Range Measurement Request. The request contains the number of range measurements to be performed in the Requested Measurement Number field. Upon acknowledgement of the request, the initiator shall send the Range command frame of type Range Measurement to the recipient device with the ACK Policy field set to Imm-ACK.

For each Range command frame of type Range Measurement the initiator device shall:

1) Capture the PHY range timer value at the time of transmission of the Range command frame of type Range Measurement, T1, and add the calibration constant:

   T1c = T1 + pRangingTransmitDelay.

DRAFT



Copyright International Organization for Standardization
Provided by IHS under license with ISO
No reproduction or networking permitted without license from IHS
Not for Resale

2) Capture the PHY range timer value, R2, at the time of reception of the Imm-ACK and subtract the calibration constant:

R2c = R2 - pRangingReceiveDelay.

Upon reception of the Range command frame of type Range Measurement Report, the initiator passes the values in the report to the DME. The PHY range timer may be turned off.

If a device supports range measurement and receives a Range command frame of type Range Measurement Request, it shall turn on the PHY range timer. For each Range command frame of type Range Measurement received, the recipient shall:

1) Capture the PHY range timer value = R1 at the time of reception of the Range command frame of type Range Measurement and subtract the calibration constant:

R1c = R1 - pRangingReceiveDelay.

2) Capture the PHY range timer value at the time of transmission of the Imm-ACK, T2 and add the calibration constant:

T2c = T2 + pRangingTransmitDelay.

The recipient shall further send a Range command frame of type Range Measurement Report to the initiator after reception of all Range command frames of type Range Measurement. The number of Range command frames of type Range Measurement is specified in the Requested Measurement Number field in the Range command frame of type Range Measurement Request. After the report command frame is sent, the PHY range timer may be turned off.

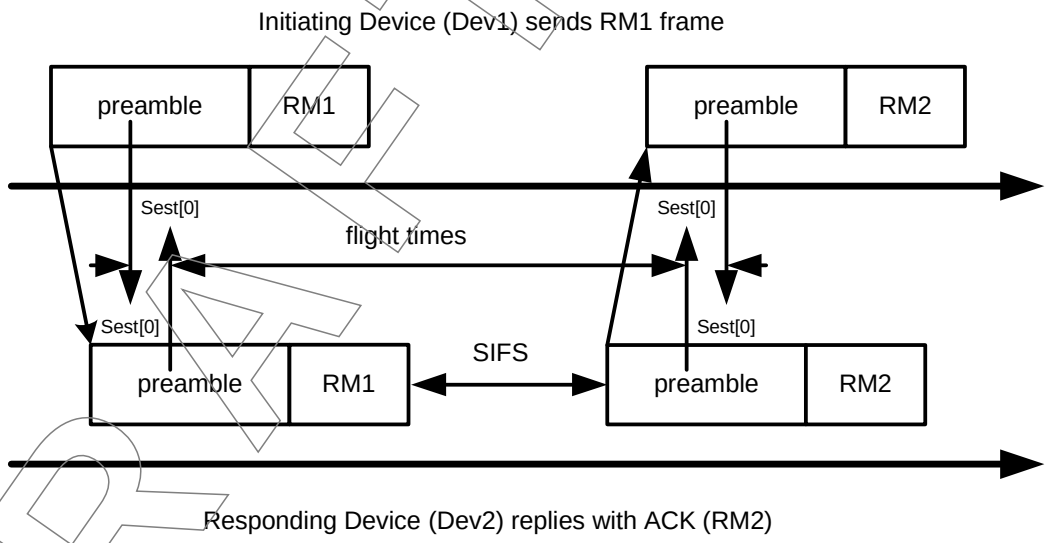


*Figure 109 - Example of range measurement frame pair*

DRAFT 2009



Copyright International Organization for Standardization
Provided by IHS under license with ISO
No reproduction or networking permitted without license from IHS
Not for Resale

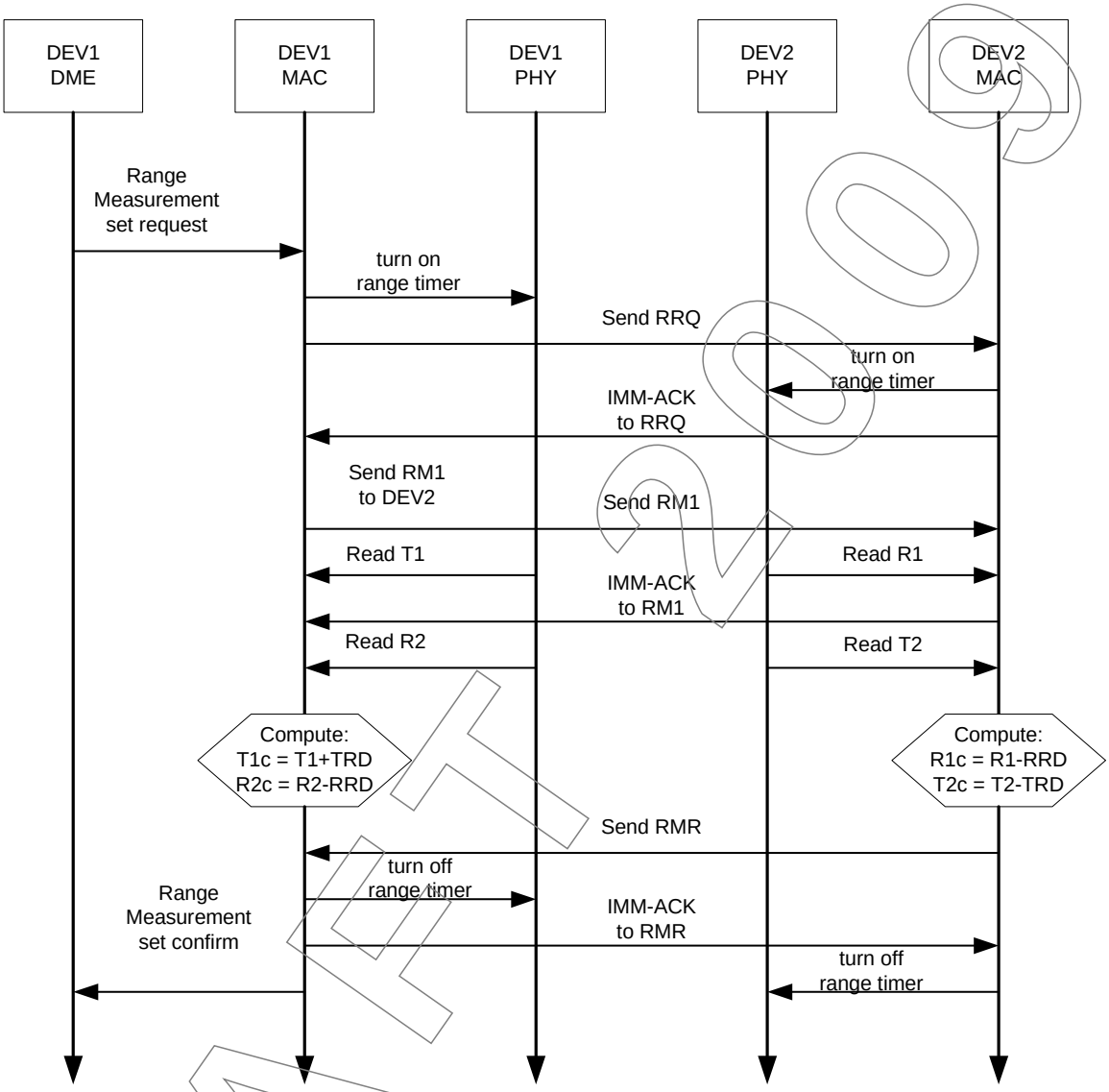


*Figure 110 - Single pair range measurement transaction*

DRAFT



Copyright International Organization for Standardization
Provided by IHS under license with ISO
No reproduction or networking permitted without license from IHS
Not for Resale

## 17.16 MAC sublayer parameters

Table 129 contains the values for the MAC sublayer parameters.

Table 129 - MAC sublayer parameters

| Parameter | Value |
|---|---|
| mAccessDelay | 652 μs |
| mAggregationLimit | 63 |
| mBeaconSlotLength | 85 μs |
| mBPExtension | 8 beacon slots |
| mBPMergeWaitTime | 128 superframes |
| mClockAccuracy | 20 ppm |
| mClockResolution | 1 μs |
| mDAAAnnounceInterval | 16 |
| mDAAPersistence | 256 |
| mDRPBackoffWinMax | 16 superframes |
| mDRPBackoffWinMin | 2 superframes |
| mGuardTime | 12 μs |
| mInitialMoveCountdown | 3 × mMaxLostBeacons |
| mMasLength | 256 μs |
| mMaxBeaconLength | mBeaconSlotLength - pSIFS - mGuardTime |
| mMaxBeaconSlotCollisionDetectionLatency | 16 |
| mMaxBlockACKSequences | 2 |
| mMaxBPLength | 96 beacon slots |
| mMaxFragmentCount | 8 |
| mMaxHibernationProtection | 128 superframes |
| mMaxLostBeacons | 3 |
| mMaxMainsHopCount | 3 |
| mMaxMovableLatency | 32 |
| mMaxNeighborDetectionInterval | 128 superframes |
| mMaxSignalingSlotBackoff | 128 |
| mMaxSynchronizationAdjustment | 4 μs |
| mMinFragmentSize | 1 |
| mSignalSlotCount | 2 beacon slots |



Copyright International Organization for Standardization
Provided by IHS under license with ISO
No reproduction or networking permitted without license from IHS
Not for Resale

Table 129 - MAC sublayer parameters (concluded)

| Parameter | Value |
|---|---|
| mSuperframeLength | 256 × mMasLength |
| mCWMin[AC_BK] | 15 |
| mCWMin[AC_BE] | 15 |
| mCWMin[AC_VI] | 7 |
| mCWMin[AC_VO] | 3 |
| mCWMax[AC_BK] | 1 023 |
| mCWMax[AC_BE] | 1 023 |
| mCWMax[AC_VI] | 511 |
| mCWMax[AC_VO] | 255 |
| mAIFSN[AC_BK] | 7 |
| mAIFSN[AC_BE] | 4 |
| mAIFSN[AC_VI] | 2 |
| mAIFSN[AC_VO] | 1 |
| mTXOPLimit[AC_BK] | 512 μs |
| mTXOPLimit[AC_BE] | 512 μs |
| mTXOPLimit[AC_VI] | 1 024 μs |
| mTXOPLimit[AC_VO] | 256 μs |

Table 130 contains the values of the PHY dependent parameters used by the MAC sublayer for the PHY.

Table 130 - PHY-dependent MAC sublayer parameters for the PHY

| Parameter | Value |
|---|---|
| pBeaconTransmitRate | 53,3 Mbps |
| pCCADetectTime | 5,625 μs |
| pClockAccuracy | 20 ppm |
| pMaxFramePayloadSize | 4 095 octets |
| pMIFS | 1,875 μs |
| pRangingReceiveDelay | Implementation-dependent |
| pRangingTransmitDelay | Implementation-dependent |
| pSIFS | 10 μs |
| pSlotTime | 9 μs |

# 18 Security

This Clause specifies available security mechanisms. 18.1 reviews these security mechanisms. 18.2 defines security modes that govern the security operation of devices. 18.3 specifies the



Copyright International Organization for Standardization
Provided by IHS under license with ISO
No reproduction or networking permitted without license from IHS
Not for Resale

4-way handshake procedure for two devices to establish pair-wise temporal keys (PTKs) and a secure relationship. This Clause also describes how a device may solicit or distribute group temporal keys (GTKs) within a secure relationship. 18.4 describes the procedures for frame reception and replay prevention. 18.5 provides the parameters needed in applying the AES-128 CCM cryptography to compute the message integrity code (MIC) and encrypt the secure payload for secure frames.

## 18.1 Security mechanisms

The security mechanisms specified in this Standard control the security operation of devices by setting appropriate security modes. They allow devices to authenticate each other, to derive PTKs, and to establish secure relationships. They also enable devices to solicit or distribute GTKs within established secure relationships. In addition, the security mechanisms provide replay attack prevention measures through the use of secure frame counters (SFCs) and replay counters. The security mechanisms specify the parameters needed in applying the AES-128 CCM to protect the privacy and integrity of unicast and broadcast/multicast traffic using PTKs and GTKs, respectively. Privacy is protected by encrypting the secure payload, while integrity is protected by including a MIC.

Two devices use a shared master key to establish a secure relationship. The establishment and management of master keys are additional security facilities that need to be provided outside the MAC sublayer.

### 18.1.1 Security operation

Security modes are defined to control the level of security required of a device in its communications with other devices. Three security modes are provided. Mode 0 allows a device to communicate without security protection. Mode 1 allows a device to use both secure and non-secure frames for data exchanges. Mode 2 restricts a device to use security facilities in transmitting and receiving certain frames.

A device announces its selected security mode in the Beacon Parameters field in its beacons.

### 18.1.2 4-way handshake

The 4-way handshake mechanism enables two devices to use a shared master key to authenticate the identity of each other and to establish a new PTK for protecting certain frames exchanged between the two devices. By way of a successful 4-way handshake, the two devices establish a secure relationship with each other.

A device initiates a 4-way handshake with another device only if it has determined that it shares a master key with that device. The master key is not exposed in the 4-way handshake; it is specified by a master key identifier (MKID).

### 18.1.3 Key transport

Two devices establish a new PTK via a 4-way handshake. The PTK is derived from a shared master key and two new random numbers generated by the two devices. A PTK is never transmitted directly in any frame, encrypted or not.

Two devices, after establishing a secure relationship via a successful 4-way handshake, distribute their respective GTKs for protecting their broadcast traffic to each other, if applicable. Additionally, a device may distribute GTKs for protecting certain multicast traffic addressed to those devices with which the device has a valid secure relationship. A device may also request, or solicit, GTKs used to protect multicast traffic from the multicast source devices.

A GTK is sent in encrypted form.

DRAFT



Copyright International Organization for Standardization
Provided by IHS under license with ISO
No reproduction or networking permitted without license from IHS
Not for Resale

### 18.1.4 Freshness protection

Freshness protection insures that no parties can successfully replay previously captured messages as an attack. This Standard defines secure frame counters and replay counters on a per-temporal key basis to provide freshness protection.

### 18.1.5 Data encryption

Data encryption uses a symmetric cipher to protect data from access by parties not possessing the encryption key. This key is a PTK for unicast traffic transmitted between two devices and a GTK for broadcast/multicast traffic transmitted from a sender to a group of recipients.

AES-128 counter mode is used for data encryption in this Standard.

### 18.1.6 Frame integrity protection

Frames are protected from modification by other parties by message authentication using a MIC. The MIC also provides assurance that the sender of the frame possesses the correct temporal key. This key is shared among a group of devices or only between two devices. The MIC is a cryptographic checksum of the message to be protected.

AES-128 cipher block chaining - message authentication code (CBC-MAC) is used for MIC calculation in this Standard.

## 18.2 Security modes

The security mode indicates whether a device is permitted or required to establish a secure relationship with another device for data communications.

Two devices establish a secure relationship by a 4-way handshake based on a shared master key as described in 18.3.

Once two devices establish a secure relationship, they shall use secure frames for frame transfers between them as specified in Table 131 and Table 132**.** Either device shall discard a received frame from the other device if the frame is required to be a secure frame but was transmitted as a non-secure frame.

Data and aggregated data frames shall be transmitted using the temporal key specified by the TKID passed through the MAC SAP along with the corresponding MSDU. Command and control frames, when transmitted as secure frames in a secure relationship, shall employ a temporal key currently possessed in that secure relationship.

DRAFT ISO/IEC



Copyright International Organization for Standardization
Provided by IHS under license with ISO
No reproduction or networking permitted without license from IHS
Not for Resale

In Table 131, "N" indicates a non-secure frame, and "S" indicates a secure frame.

Table 131 - Frame protection in a secure relationship

| Frame type or subtype | Frame protection | Meaning |
|---|---|---|
| Beacon frame | N | Beacon frames shall be sent as non-secure frames. |
| Imm-ACK control frame | N | Imm-ACK frames shall be sent as non-secure frames. |
| B-ACK control frame | N | B-ACK frames shall be sent as non-secure frames. |
| RTS control frame | N | RTS frames shall be sent as non-secure frames. |
| CTS control frame | N | CTS frames shall be sent as non-secure frames. |
| UDA control frame | N | UDA frames shall be sent as non-secure frames. |
| UDR control frame | N | UDR frames shall be sent as non-secure frames. |
| Application-specific control frame | N, S | Application-specific control frames may be sent as secure or non-secure frames. |
| DRP Reservation Request command frame | N, S | DRP Reservation Request frames may be sent as secure or non-secure frames. |
| DRP Reservation Response command frame | N,S | DRP Reservation Response frames may be sent as secure or non-secure frames. |
| Probe command frame | N, S | Probe frames may be sent as secure or non-secure frames. |
| PTK command frame | N, S | PTK frames may be sent as secure or non-secure frames. |
| GTK command frame | S | GTK frames shall be sent as secure frames. |
| Range Measurement command frame | N, S | Range Measurement frames may be sent as secure or non-secure frames. |
| Probe command frame | N, S | Probe frames may be sent as secure or non-secure frames. |
| Application-specific command frame | N, S | Application-specific command frames may be sent as secure or non-secure frames. |
| Data frame | S | Data frames shall be sent as secure frames. |
| Aggregated data frame | S | Aggregated data frames shall be sent as secure frames. |

DRAFT ECMA-368



Copyright International Organization for Standardization
Provided by IHS under license with ISO
No reproduction or networking permitted without license from IHS
Not for Resale

Table 132 specifies the values of the Encryption Offset (EO) field in secure frames

Table 132 - EO values in secure frames

| Frame type or subtype | EO value |
|---|---|
| Application-specific control frame | Application defined |
| DRP Reservation Request command frame | Length of Secure Payload |
| DRP Reservation Response command frame | Length of Secure Payload |
| PTK command frame | 0 |
| GTK command frame | 0 |
| Range Measurement command frame | Length of Secure Payload |
| Probe command frame | Variable |
| Application-specific command frame | Application defined |
| Data frame | Variable |
| Aggregated data frame | Length of (Aggregation Header + Aggregation Header Pad octets) |

### 18.2.1 Security mode 0

A device operating in security mode 0 shall use non-secure frames to communicate with other devices. Such a device shall not establish a secure relationship with any other device.

If a device operating in this mode receives a secure frame, the MAC sublayer shall discard the frame.

### 18.2.2 Security mode 1

A device operating in security mode 1 shall use non-secure frames to communicate with devices operating in security mode 0. The device shall also use non-secure frames to communicate with devices operating in security mode 1 with which it does not have secure relationships. The device shall use secure frames according to Table 131 and Table 132 to communicate with another device operating in security mode 1 with which it has a secure relationship. It shall not establish secure relationships with other devices unless those devices are also operating in security mode 1.

A device operating in security mode 1 may or may not respond to command frames received from other devices with which it does not have a secure relationship.

If a device operating in security mode 1 receives a secure frame from a device with which it does not have a secure relationship, the MAC sublayer shall discard the frame.

If a device operating in mode 1 receives a non-secure frame from a device with which it has a secure relationship, but the frame is required to be a secure frame per Table 131, the MAC sublayer shall discard the frame.

### 18.2.3 Security mode 2

A device operating in security mode 2 shall not establish a secure relationship with devices operating in either security mode 0 or security mode 1. The device shall use secure frames based on Table 131 and Table 132 to communicate with another device operating in security mode 2 and having a secure relationship with it. A device operating in security



Copyright International Organization for Standardization
Provided by IHS under license with ISO
No reproduction or networking permitted without license from IHS
Not for Resale

mode 2 shall establish a secure relationship with another device operating in the same security mode by a 4-way handshake prior to data exchanges.

If a device operating in mode 2 receives a secure frame from a device with which it does not have a secure relationship, the MAC sublayer shall discard the frame.

If a device operating in mode 2 receives a non-secure frame that is required to have frame protection per Table 131, regardless of whether the device has a secure relationship with the device transmitting the frame, the MAC sublayer shall discard the frame.

## 18.3 Temporal keys

Two devices establish a secure relationship based on a shared master key by employing a 4-way handshake to derive a PTK as described in this Clause**.** They may establish a PTK for each master key they share. Two devices have a secure relationship as long as they possess a currently installed PTK. A device's DevAddr is part of the information used in deriving a PTK. Once a PTK is established, it shall not be changed due to a change in the device's DevAddr.

A device solicits a GTK from, or distributes a GTK to, another device sharing a PTK as also described in this Clause.

Master keys are identified by MKIDs. A device is not required to include an MKID IE in its beacon, nor is it required to advertise every MKID it possesses in the MKID IE included in its beacon. It may advertise some or all of the MKIDs it possesses in an MKID IE in its beacon. A device may probe another device for the MKIDs possessed by that device by addressing an appropriate Probe IE in a beacon or Probe command to that device. If a device responds to a Probe request for MKIDs, it shall report all the MKIDs it possesses.

### 18.3.1 Mutual authentication and PTK derivation

This Standard uses a 4-way handshake to provide mutual authentication and PTK generation for two devices sharing a master key. To perform a 4-way handshake, the two devices assume the roles of "initiator" and "responder", respectively. A 4-way handshake consists of four messages, called message 1, message 2, message 3, and message 4, that are sent back and forth between the two devices. The device sending message 1 becomes the initiator. The other device becomes the responder.

#### 18.3.1.1 4-way handshake message 1

The initiator shall begin a 4-way handshake by composing and sending message 1 in a PTK command to the responder. In this command, the initiator shall specify the MKID for use in the 4-way handshake, propose a TKID for the PTK to be derived, and include a unique 128-bit cryptographic random number, I-Nonce. The proposed TKID shall be different from any TKID currently installed in the initiator's local MAC sublayer or being used in an in-progress 4-way handshake involving this initiator device. The I-Nonce shall be generated anew each time the initiator starts a new 4-way handshake.

On reception of message 1, the responder shall verify that the requested TKID is unique (i.e., not currently installed for an active temporal key or requested by an in-process 4-way handshake exchange). The responder shall perform the following steps:

1. Generate a new 128-bit cryptographic random number, R-Nonce.
2. Derive the PTK and KCK as specified in 18.3.4.
3. Construct and send message 2 in a PTK command.

#### 18.3.1.2 4-way handshake message 2

The responder shall send message 2 to the initiator as specified in 18.3.1.1. In this command, the responder shall include an appropriate Status Code, the newly generated R-Nonce, and the PTK MIC value computed for the message using the newly derived



Copyright International Organization for Standardization
Provided by IHS under license with ISO
No reproduction or networking permitted without license from IHS
Not for Resale

KCK according to 18.3.5. If the proposed TKID in message 1 is not unique, the responder shall so indicate in the Status Code.

On reception of message 2, the initiator shall perform the following steps:

1. Derive the PTK and KCK as specified in 18.3.4.
2. Recalculate the PTK MIC for the received message using the KCK according to 18.3.5. If the recalculated PTK MIC does not match the PTK MIC field from this message, discard and disregard message 2 and abort the 4-way handshake. Otherwise, consider this message a proof that the responder holds the correct master key, and proceed to the next step.
3. Check the Status Code returned in the received message. If the Status Code indicates an abortion of the 4-way handshake by the responder, stop the 4-way handshake as well. If the Status Code indicates a conflict of the proposed TKID at the responder, restart the 4-way handshake with a different TKID. If the Status Code indicates a normal status, proceed to the next step.
4. Construct and send message 3 in a PTK command.

#### 18.3.1.3 4-way handshake message 3

The initiator shall send message 3 to the responder as specified in 18.3.1.2. In this command, the initiator shall include the same I-Nonce as contained in message 1 and a PTK MIC computed for this message using the newly derived KCK according to 18.3.5.

On reception of message 3, the responder shall perform the following steps:

1. Verify the PTK MIC for this message using the KCK according to 18.3.5. If the calculated PTK MIC does not match the PTK MIC field from this message, discard and disregard message 3 and abort the 4-way handshake. Otherwise, consider this message a proof that the initiator holds the correct master key, and proceed to the next two steps.
2. Construct and send message 4 in a PTK command.
3. Save the PTK for future use with this secure relationship.

#### 18.3.1.4 4-way handshake message 4

The responder shall send message 4 to the initiator as specified in 18.3.1.3. In this command, the responder shall include the same R-Nonce as contained in message 2 and a PTK MIC computed for this message using the KCK according to 18.3.5.

On reception of message 4, the initiator shall perform the following step:

1. Verify the PTK MIC for this message using the KCK according to 18.3.5. If the calculated PTK MIC does not match the PTK MIC field from this message, discard and disregard message 4 and abort the 4-way handshake. Otherwise, save the PTK for future use with this secure relationship.

### 18.3.2 GTK exchange

Upon successful completion of a 4-way handshake and installation of the resulting PTK, the initiator and responder each shall use GTK command frames (with Message Number set to 1) to distribute their respective GTKs for broadcast traffic to each other. Each may also use a GTK command to distribute a GTK for protecting certain multicast traffic to an intended recipient with which it holds a valid PTK.

On reception of a valid GTK command frame marked as Message Number 1, a device shall verify that the GTKID is a unique TKID. The device shall then respond with a GTK command frame with Message Number set to 2 and Status Code set to the appropriate value.



Copyright International Organization for Standardization
Provided by IHS under license with ISO
No reproduction or networking permitted without license from IHS
Not for Resale

A recipient may request a GTK for certain multicast traffic in the form of a GTK command (with Message Number set to 0) from the source device if it holds a valid PTK with the source.

On reception of a valid GTK command marked as Message Number 0, the multicast source device shall respond with a GTK command marked as Message Number 1, which may or may not contain the requested GTK. The requesting device, upon receiving this GTK command and verifying the uniqueness of the proposed TKID, shall further return a GTK command with Message Number set to 2 and Status Code set to the appropriate value.

A source device distributing a GTK shall check the Status Code indicated in the returned GTK command (Message Number set to 2). If the Status Code indicates a conflict of the proposed TKID at the recipient device, the source device shall propose a new TKID and re-distribute the GTK to the recipient. After receiving a returned GTK command from the recipient with the Status Code indicating a normal status, the source device shall use the new TKID to re-distribute the GTK to each of the devices to which it has previously distributed the GTK and with which it maintains a secure relationship.

A GTK shall be a 128-bit cryptographic-grade random number. A fresh GTK shall be generated when the distributing device establishes a new group relationship. 18.3.6 provides an example means of generating a fresh GTK.

### 18.3.3 Pseudo-random function (PRF) definition

A PRF is used in several places in the security specification. Depending on the use, the PRF may need to output values of 64 bits, 128 bits, and 256 bits. This Clause defines three PRF variants:

- PRF-64, which outputs 64 bits,
- PRF-128, which outputs 128 bits, and
- PRF-256, which outputs 256 bits.

In the following, K denotes a 128-bit symmetric key, N denotes a 13-octet nonce value, A denotes a unique 14-octet ASCII text label for each different use of the PRF, B denotes the input data stream, Blen specifies the length of this data stream, and || denotes concatenation. Blocks are each 16 octets long, and are defined as inputs to the AES-128 CCM for the MIC generation as specified in 18.5.

CCM-MAC-FUNCTION(*K, N, A, B, Blen*)

**begin**

Form authentication block B_0 from flags = 0x59, *N*, and l(m) = 0

Form authentication block B_1 from l(a) = 14 + *Blen* and *A*

Form additional authentication blocks from *B*

(with last block zero padded as needed)

Form encryption block A_0 from flags = 0x01, *N*, and Counter_*0* = 0

*R* ← MIC (*K, B_0, B_1, ..., A_0*)

**return** *R*

PRF(*K, N, A, B, Blen, Len*)

**for** *i* ← 1 **to** (*Len* + 63)/64 **do**

*R* ← *R* || CCM-MAC-FUNCTION(*K, N, A, B, Blen*)



Copyright International Organization for Standardization
Provided by IHS under license with ISO
No reproduction or networking permitted without license from IHS
Not for Resale

$N \leftarrow N + 1$

**return** L(*R, 0, Len*) = *Len* most-significant bits of *R*

PRF-64(*K, N, A, B, Blen*) = PRF(*K, N, A, B, Blen, 64*)

PRF-128(*K, N, A, B, Blen*) = PRF(*K, N, A, B, Blen, 128*)

PRF-256(*K, N, A, B, Blen*) = PRF(*K, N, A, B, Blen, 256*)

### 18.3.4 PTK and KCK derivation

PRF-256 shall be employed to generate the PTK and KCK associated with a 4-way handshake as used in 18.3.1 based on the following parameters as defined in Table 133.

*K* - The PMK

*N* - B12-11= InitiatorDevAddr, B10-9= ResponderDevAddr, B8-6 = PTKID, B5-0 = zero

*A* - "Pair-wise keys"

*B* - I-Nonce || R-Nonce

*Blen* - 32

Table 133 - PTK and KCK generation parameters

| Name | Size (octets) | Description |
|---|---|---|
| InitiatorDevAddr | 2 | DevAddr of device with role of initiator |
| ResponderDevAddr | 2 | DevAddr of device with role of responder |
| I-Nonce | 16 | Random number selected by initiator (in message 1) |
| R- Nonce | 16 | Random number selected by responder (in message 2) |
| PTKID | 3 | Negotiated TKID value for the PTK to be derived (in message 1) |
| PMK | 16 | A pre-shared pair-wise master key identified by the MKID (in message 1) |

The PRF-256 is called with these parameters to compute a 256-bit key stream:

KeyStream ← PRF-256(*K, N, A, B, Blen*)

This key stream is then split to form the desired PTK and KCK. The least-significant 16 octets of KeyStream become the KCK while the most-significant 16 octets become the PTK, as defined in Table 134.

Table 134 - KCK and PTK Source

| Key | Source |
|---|---|
| KCK | KeyStream octets 0 through 15 |
| PTK | KeyStream octets 16 through 31 |

DRAFT 2009



Copyright International Organization for Standardization
Provided by IHS under license with ISO
No reproduction or networking permitted without license from IHS
Not for Resale

### 18.3.5 PTK MIC generation

The 4-way handshake uses an "out-of-band MIC" calculation for the PTK MIC field in handshake messages 2-4. PRF-64 shall be used to provide the PTK MIC calculation. The PRF-64 parameters shall be defined as follows based on Table 133:

*K* - The KCK

*N* - B12-11 = InitiatorDevAddr, B10-9 = ResponderDevAddr, B8-6 = PTKID, B5-0 = zero

*A* - "out-of-bandMIC"

*B* - Fields from Message Number to I-Nonce/R-Nonce contained in the PTK command

*Blen* - Length in octets of *B* = 48

PTK MIC ← PRF-64(*K, N, A, B, Blen*)

### 18.3.6 Random number generation

To implement the cryptographic mechanisms outlined in this Standard, devices need to generate cryptographic grade random numbers. RFC 4086 [4] gives a detailed explanation of the notion of cryptographic grade random numbers and provides guidance for collecting suitable randomness. It recommends collecting random samples from multiple sources followed by conditioning with PRF. This method can provide a means for an implementation to create an unpredictable seed for a pseudo-random generation function. The example below shows how to distill such a seed using random samples and PRF-128.

LoopCounter = 0

Nonce = 0

**while** LoopCounter < 32 **begin**

result = PRF-128(0, Nonce, "InitRandomSeed", DevAddr || Time || result || LoopCounter, dataLen)

Nonce ← Nonce + 1

result ← result || <randomness samples>

**end**

GlobalSeed = PRF-128(0, Nonce, "InitRandomSeed", DevAddr || Time || result || LoopCounter, dataLen)

Once the seed has been distilled, it can be used as a key for further random number generation. The 4-way handshake requires each party to supply a 128-bit random number. This number can be generated using the seed and PRF-128.

GenerateRandomNonce

**begin**

N = DevAddr || DevAddr || zero

Collect randomness samples

result = PRF-128(Global Seed, N, "Random Numbers", <randomness samples>, length of samples)

**return result**

## 18.4 Frame reception steps and replay prevention measures

A recipient device shall carry out the reception steps and replay prevention measures as specified in this Clause.

DRAFT 0.09



Copyright International Organization for Standardization
Provided by IHS under license with ISO
No reproduction or networking permitted without license from IHS
Not for Resale

### 18.4.1 Frame reception

The MAC sublayer shall perform the following validation steps when receiving frames:

1. Validate the FCS. If this validation fails, discard the frame. Otherwise, acknowledge the received frame using the appropriate acknowledgment rules, and proceed to the next step.
2. Validate the Secure bit setting in the MAC Header and take the appropriate actions according to its security mode as specified in 18.2. If the frame is not discarded and the Secure bit is set to ONE, proceed to the next step.
3. Validate the TKID. If the TKID does not identify a currently installed PTK or GTK, discard the frame. Otherwise, proceed to the next step.
4. Validate the MIC using the identified PTK or GTK as specified in 18.5. If this validation fails, discard the frame. Otherwise, proceed to the next step.
5. Detect frame replay as specified in 18.4.2. If replay is detected, discard the frame. Otherwise, update the replay counter that was set up for the PTK or GTK used for this frame as also specified in 18.4.2, and proceed to the next step.
6. Process the frame as specified in Clause 17, including duplicate frame filtering. If the frame was already received, discard it. Otherwise, proceed to the next step.
7. Decrypt the frame. This step may be taken in parallel with the MIC validation step.

### 18.4.2 Replay prevention

Each transmitting MAC sublayer shall set up a 48-bit SFC and initialize it to zero when a temporal key, PTK or GTK, is installed to it. The MAC sublayer shall increment the SFC by one before transmitting a secure frame - whether a new frame or a retry - that uses the temporal key, and shall set the SFN in that secure frame to the value of the SFC after the increment.

Each recipient MAC sublayer shall set up a 48-bit replay counter when a temporal key, PTK or GTK, is installed to it. The MAC sublayer shall initialize the replay counter to zero for an installed PTK, and to the GTK SFC for an installed GTK which was contained in the GTK command distributing the GTK.

Upon receipt of a secure frame with valid FCS and MIC, the recipient shall perform replay attack detection and protection as follows:

The recipient shall compare the SFN extracted from the received frame with the reading of the replay counter for the temporal key used by the frame. If the extracted SFN is smaller than or equal to the replay counter reading, the recipient MAC sublayer shall discard the frame. Otherwise, the recipient shall set the corresponding replay counter to the received SFN.

The recipient shall insure that the frame passes FCS validation, replay prevention, and MIC verification before using the SFN to update its replay counter.

### 18.4.3 Implications on GTKs

Because a recipient maintains only one replay counter per installed temporal key, that recipient can receive traffic from only one source using a given temporal key. A scheme that allows multiple source devices to use the same GTK will result in frames sent from some of those sources being seen as replay attacks. To avoid this problem, each source device in a group is required to distribute a unique GTK to the recipients in the group.

## 18.5 AES-128 CCM Inputs

AES-128 CCM provides confidentiality, authentication, and integrity for secure frames defined in this Standard. This Clause specifies the various fields required for AES-128 CCM operation.



Copyright International Organization for Standardization
Provided by IHS under license with ISO
No reproduction or networking permitted without license from IHS
Not for Resale

### 18.5.1 Overview

AES, the Advanced Encryption Standard, is specified in FIPS PUB 197. AES-128 defines a symmetric block cipher that processes 128-bit data blocks using 128-bit cipher keys. CCM, counter with CBC-MAC, is specified in RFC 3610. CCM employs counter mode for encryption and cipher block chaining for authentication. AES-128 CCM combines AES-128 with CCM to encrypt and authenticate messages.

Encryption is done on part or all of the Secure Payload, while authentication is provided by a message integrity code (MIC) that is included in each secure frame. MIC also protects the integrity of the MAC Header and Frame Payload in a secure frame.

CCM has two input parameters - M (number of octets in authentication field) and L (number of octets in length field). For this Standard, M = 8 and L = 2.

CCM requires the use of a temporal key and a unique Nonce for each transmitted frame to be protected. The SFN is combined with frame addressing and temporal key identification information to provide a unique Nonce for every secure frame. Since every frame protection with a key requires a unique Nonce, temporal keys have a known lifetime. Each temporal key can be used to protect up to *n* frames, where *n* is the maximum value of the SFN. All security guarantees are void if a nonce value is used more than once with the same temporal key.

In the following figures in this Clause defining the format of Nonce and CCM blocks, the most-significant octet is represented to the left of the other octets.

### 18.5.2 Nonce

The CCM Nonce is a 13-octet field, consisting of the 2-octet SrcAddr, 2-octet DestAddr, 3-octet TKID, and 6-octet SFN for the current frame. The Nonce is used as a component of authentication block B_0, an input to CBC-MAC. It is also used as a component of input block A_i for CCM encryption. It provides the uniqueness that CCM requires for each instance of authentication/encryption. The CCM Nonce shall be formatted as defined in Figure 111. In this figure, each component of the Nonce is represented with the most-significant octet on the left and the least-significant octet on the right.

| octets: 2 | 2 | 3 | 6 |
|---|---|---|---|
| SrcAddr | DestAddr | TKID | SFN |

*Figure 111 - Nonce input to the CCM algorithm*

### 18.5.3 CCM blocks

The CCM authentication blocks shall be formatted as defined in Figure 112 and further described below.

DRAFT



Copyright International Organization for Standardization
Provided by IHS under license with ISO
No reproduction or networking permitted without license from IHS
Not for Resale

| octets: 1 | 13 | 2 | 2 | 10 | 2 | 1 | 1 | EO | 0-15 | P – EO | 0-15 |
|---|---|---|---|---|---|---|---|---|---|---|---|
| Flags ( = 0x59) | Nonce | Encrypted data length l(m) = P – EO | Additional authenticated data length l(a) = 14 + EO | MAC Header | Encryption Offset (EO) | Security Reserved | 0 | Secure Payload portion not to be encrypted | Zero padding | Secure Payload portion to be encrypted | Zero padding |
| B_0 | | | B_1 | | | | | B_2, …, B_(M-1) | | B_M, …, B_N | |

*Figure 112 - Input to CCM authentication blocks*

### 18.5.3.1 Authentication block B_0

Authentication block B_0 is the first input block to the CBC-MAC algorithm. It shall be formatted as defined in Figure 113. The component l(m) is represented with the most-significant octet on the left and the least-significant octet on the right. The Nonce component is represented with the least-significant octet on the left and the most-significant octet on the right.

| octets: 1 | 13 | 2 |
|---|---|---|
| Flags = 0x59 | Nonce | l(m) |

*Figure 113 - Format of authentication block B_0*

### 18.5.3.2 Authentication block B_1

Authentication block B_1 is the second input block to the CBC-MAC algorithm. It shall be formatted as defined in Figure 114. In this block, the l(a) component is represented with the most-significant octet on the left and the least-significant octet on the right. The EO and MAC Header components are represented with the first octet transmitted into the wireless medium on the left and the last transmitted octet on the right.

| octets: 2 | 10 | 2 | 1 | 1 |
|---|---|---|---|---|
| l(a) | MAC Header | EO | Security Reserved | 0 |

*Figure 114 - Format of authentication block B_1*

### 18.5.3.3 Authentication blocks B_2, …, B_N

Authentication blocks B_2, …, B_(M-1) and B_M, …, B_N, if any, are additional input blocks to the CBC-MAC algorithm. They shall be formatted as defined in Figure 115. They are formed by breaking the Secure Payload portion not to be encrypted into 16-octet blocks and the Secure Payload portion to be encrypted into 16-octet blocks. The last block constructed from the Secure Payload portion not to be encrypted is padded with zero values as needed to insure 16-octet block length. Likewise, the last block constructed from the Secure Payload portion to be encrypted is padded with zero

DRAFT



Copyright International Organization for Standardization
Provided by IHS under license with ISO
No reproduction or networking permitted without license from IHS
Not for Resale

values as needed to insure 16-octet block length. The padding octets are not transmitted onto the wireless medium.

| octets: EO | 0-15 | P – EO | 0-15 |
|---|---|---|---|
| Secure Payload portion not to be encrypted | Zero padding | Secure Payload portion to be encrypted | Zero padding |
| B_2, …, B_(M-1) | | B_M, …, B_N | |

*Figure 115 - Format of authentication blocks beginning from B_2*

In each of the blocks B_2, …, B_(M-1) or B_M, …, B_N, the Secure Payload portion not to be, or to be, encrypted shall be represented with the earliest octet transmitted into the wireless medium on the left and the latest transmitted octet on the right. When needed, B_(M-1) and B_N are padded with zeros to the right.

#### 18.5.3.4 Encryption blocks A_0, A_1, …, A_m

CCM uses encryption blocks A_0, A_1, …, A_m to generate key stream blocks that are used to encrypt the CBC-MAC and the Secure Payload portion to be encrypted. These blocks shall be formed as defined in Figure 116. In this figure, Counter *i* is a 2-octet monotonically incrementing counter that shall be initialized to 0 for each secure frame. It shall be incremented by one for each successive encryption block. The Counter *i* component of A_i shall be represented with the most-significant octet on the left and the least-significant octet on the right. The Nonce component shall be represented with the least-significant octet on the left and the most-significant octet on the right.

| octets: 1 | 13 | 2 |
|---|---|---|
| Flags = 0x01 | Nonce | Counter *i* |

*Figure 116 - Format of A_i blocks*

DRAFT ECMA-409



Copyright International Organization for Standardization
Provided by IHS under license with ISO
No reproduction or networking permitted without license from IHS
Not for Resale

# Annex A
# (normative)

# MUX sublayer

The MUX sublayer is the MAC client as depicted in Figure 31 and routes data between the MAC sublayer and MUX clients.

## A.1 MUX service

The MUX sublayer is expressed in terms of the MUX SAP, the MUX service, and the MUX client. Each MUX client is associated with a unique protocol. Service data units presented at the MUX SAP by the MUX client are therefore associated with that protocol.

The protocol is encoded in a MUX header as either:

- A protocol identifier and an OUI; or
- An IEEE Ethertype value [H2].

The MUX service adds a MUX header to the MUX service data unit to construct a MUX protocol data unit. The MUX sublayer makes use of the service provided by the MAC sublayer for the transfer of its protocol data units.

On receipt of a MUX protocol data unit from the MAC sublayer, the MUX service removes the MUX header and delivers the transported service data unit to the appropriate MUX client based on the identified protocol.

## A.2 MUX protocol data unit format

A MUX protocol data unit consists of a MUX Header and a MUX Payload and is defined in Figure A.1.

| octets: 2 or 5 | N |
|---|---|
| MUX Header | MUX Payload |

*Figure A.1 - MUX protocol data unit format*

The MUX Payload field contains the MUX service data unit that is a payload data unit of the protocol identified in the MUX Header.

The first two octets of the MUX Header are encoded as unsigned binary values, and are delivered to the MAC sublayer in order from the octet containing the most-significant bits to the octet containing the least-significant bits. The octet order for this field is the reverse of that for most fields in this specification.

The MUX Payload is a sequence of octets labelled as MUX Payload[0] through MUX Payload[M-1]. Octets are passed to the MAC sublayer in ascending index-value order.

The MUX Header and MUX Payload together form the payload of the MAC sublayer, which appears to the MAC as a sequence of octets labelled as payload[0] through payload[P-1], as specified in 16.2.

DRAFT 2009



Copyright International Organization for Standardization
Provided by IHS under license with ISO
No reproduction or networking permitted without license from IHS
Not for Resale

There are three versions of the MUX Header, which are distinguished based on the value of the first two octets of the header.

### A.2.1 MUX Header - OUI version

The first version has a length of five octets and is defined in Figure A.2.

| octets: 2 | 3 |
|---|---|
| Protocol ID<br>(0x0000 - 0x00FF) | OUI |

*Figure A.2 - Format of first version of MUX Header*

The Protocol ID field is restricted to values from 0 through 255 and is set to a value that identifies a protocol defined by the owner of the OUI specified in the OUI field. The OUI is a sequence of 3 octets, labelled as oui[0] through oui[2]. Octets of the OUI are passed to the MAC sublayer in ascending index-value order.

### A.2.2 MUX Header - reserved version

The second version of the MUX Header has a length of two octets and is defined in Figure A.3.

| octets: 2 |
|---|
| Protocol ID<br>(0x0100 - 0x05FF) |

*Figure A.3 - Format of second version of MUX Header*

The protocol ID field has values between 256 and 1 535 as defined in Table A.1.

Table A.1 - Protocol ID in the MUX Header

| Value | Description |
|---|---|
| 0 - 255 | Defined by the OUI owner |
| 256 | Protocol ID value for WiMedia Logical Link Control Protocol |
| 257 | Protocol ID value for Bluetooth |
| 258 - 1 535 | Reserved for future use |

DRAFT 2009



Copyright International Organization for Standardization
Provided by IHS under license with ISO
No reproduction or networking permitted without license from IHS
Not for Resale

### A.2.3 MUX Header - Ethernet type version

The third version of the MUX Header has a length of two octets and is defined in Figure A.4.

| octets: 2 |
| --- |
| Ethernet Type<br>(0x0600 - 0xFFFF) |

*Figure A.4 - Format of third version of MUX Header*

The Ethernet Type field is restricted to values from 1 536 through 65 535 and is set to the value of an Ethernet type [H2] identifying a protocol.

DRAFT 2009



Copyright International Organization for Standardization
Provided by IHS under license with ISO
No reproduction or networking permitted without license from IHS
Not for Resale

DRAFT 2009



Copyright International Organization for Standardization
Provided by IHS under license with ISO
No reproduction or networking permitted without license from IHS
Not for Resale

# Annex B
(normative)

# MAC policies

## B.1 Beacon slot selection

When a device selects an initial beacon slot after scanning for beacons as described in 17.2.3, the device shall transmit a beacon only if it selected a slot within mMaxBPLength/2 after the BPST.

## B.2 Reservation limits

A reservation consists of a row component and a column component.

Row component: A portion of a reservation that includes an equal number of MASs at the same offset(s) within every zone, optionally excluding zone zero, as indicated in the DRP IEs.

Column component: The portion of the reservation that is not a row component.

Rules stated in this Clause apply independently to a device whether it is a reservation owner or a reservation target. They do not apply to DRP IEs with Reservation Type set to Alien BP.

A device may consider contiguous reservation blocks from multiple column components in the same zone as if they were a single reservation block in a single column component.

A device shall not allocate more channel time than necessary for its optimal operation.

A device shall set the Unsafe bit of the DRP Control field of a DRP IE according to the following rules:

A) A device shall not identify more than mTotalMASLimit MASs in DRP IEs with the Unsafe bit set to ZERO.

B) A device shall not identify more than Y consecutive MAS in the same zone within a column component in DRP IEs with the Unsafe bit set to ZERO, where Y is a function of the MAS number within the zone (counting from zero) of the earliest reserved MAS within the set of consecutive MASs, as defined in Table B.1.

DRAFT 2009



Copyright International Organization for Standardization
Provided by IHS under license with ISO
No reproduction or networking permitted without license from IHS
Not for Resale

Table B.1 - Reservation block size limits

| First MAS number | Y |
|---|---|
| 0 | 8 |
| 1 | 7 |
| 2 | 6 |
| 3 | 5 |
| 4 | 4 |
| 5 | 4 |
| 6 | 4 |
| 7 | 4 |
| 8 | 4 |
| 9 | 4 |
| 10 | 4 |
| 11 | 4 |
| 12 | 4 |
| 13 | 3 |
| 14 | 2 |
| 15 | 1 |

C) A device shall not set the Unsafe bit to ONE in DRP IEs except to comply with A) or B).

A device shall not include MASs in zone zero in the column component of a reservation.

A device may at any time send a Relinquish Request IE in its beacon where the Target DevAddr identifies a device transmitting its beacon with one or more DRP IEs with the Unsafe bit of the DRP IE Control field set to ONE (unsafe DRP IEs). The device shall not set the Target DevAddr field to identify a device if that device does not include any unsafe DRP IEs in its beacon, unless forwarding a received Relinquish Request IE to its reservation owner, as specified in 17.1.10.19.

The Allocation fields of the Relinquish Request IE should identify MASs in one or more unsafe DRP IEs.

The Reason Code of the Relinquish Request Control field should be set to a valid Reason Code indicating the reason for requesting the identified MASs.

If a device receives a beacon that contains a Relinquish Request IE with Target DevAddr set to its own DevAddr that identifies MASs it includes in an unsafe DRP IE, it shall:

- Modify its DRP IEs to remove the identified MASs; or
- Modify its DRP IEs such that the Unsafe bit in any DRP IE that includes one or more identified MAS is set to ZERO per the previous rules in this Clause.



Copyright International Organization for Standardization
Provided by IHS under license with ISO
No reproduction or networking permitted without license from IHS
Not for Resale

The device shall make this adjustment within mUnsafeReleaseLimit superframes after first receiving the Relinquish Request IE.

If a device requests a neighbour to release MASs in an unsafe DRP IE, the device shall not include a new unsafe DRP IE in its beacon or change a DRP IE to set the Unsafe bit to ONE until mOwnerUnsafeHoldoff has passed.

If a device includes an unsafe DRP IE in its beacon and it receives a Relinquish Request IE that identifies MASs included in the DRP IE, it shall not include a new unsafe DRP IE in its beacon or change a DRP IE to set the Unsafe bit to ONE until the neighbour requesting release establishes a new DRP IE or mTargetUnsafeHoldoff has passed.

## B.3 PCA reservations

If a device initiates frame transactions in PCA reservations established by its neighbours, it should also establish PCA reservations that include the MASs it uses. A device shall not initiate frame transactions in more than mTotalMASLimit MASs that are included in DRP IEs with the Unsafe bit set to ZERO and Reservation Type set to PCA included in beacons by the device or any neighbour.

## B.4 Reservation locations

As referenced in this Clause, a reservation owner shall select MASs based on a minimum latency requirement of not less than 4 milliseconds, or on a medium utilization efficiency or power consumption requirement for a minimum reservation block length.

In the row component of a reservation, the reservation owner shall select reservation blocks such that the lowest MAS number selected within a zone is maximized, except that the reservation owner is not required to use more than one reservation block per zone.

In the column component of a reservation, the reservation owner shall select reservation blocks that meet its requirements such that each block is located within the first eight MASs of its zone, if possible. If not possible, the reservation owner shall select reservation blocks that meet its requirements and that minimize the highest MAS number selected in any zone.

If multiple potential zone locations meet the previous requirements, the reservation owner shall select reservation blocks in zones such that the latest used set in the following ordered list of sets is as early as possible:

[{8}, {4 or 12}, {2, 6, 10, or 14}, {1, 3, 5, 7, 9, 11, 13, or 15}].

If there are multiple possible zone locations that use the same latest set, the reservation owner should minimize the highest MAS number selected within the zones. The reservation owner shall place each reservation block at the earliest available location within its zone.

If the MASs available for reservation by the reservation owner change, it shall determine if its reservations would still meet the reservation location rules listed in B.4. If not, the reservation owner shall change its reservations within mCompactionLimit superframes such that they meet the reservation location rules.

A reservation owner may disregard the reservation location rules for MASs identified in DRP IEs with the Unsafe bit set to ONE according to the Y limit stated in B.2.

## B.5 Transmit power control

A device shall support transmit power control and use the lowest possible transmit power with which it can maintain its links.

--`,,```,,,,````-`-`,,`,,`,`,,`---



Copyright International Organization for Standardization
Provided by IHS under license with ISO
No reproduction or networking permitted without license from IHS
Not for Resale

DRAFT 2.0

## B.6 MAC policies parameters

Table B.2 contains the values for the MAC policies parameters.

Table B.2 - MAC policies parameters

| Parameter | Value |
|---|---|
| mCompactionLimit | 32 superframes |
| mOwnerUnsafeHoldoff | 32 superframes |
| mTargetUnsafeHoldoff | 2×mMaxLostBeacons superframes |
| mTotalMASLimit | 112 MASs |
| mUnsafeReleaseLimit | 4 superframes |

DRAFT 2009



Copyright International Organization for Standardization
Provided by IHS under license with ISO
No reproduction or networking permitted without license from IHS
Not for Resale

# Annex C
## (normative)

# Specifier ID Assigned numbers

The Specifier ID identifies a company or organization that is responsible for the definition of the application-specific control frames, command frames, IEs and Probe IEs. The Specifier ID is represented by a 16-bit value that is associated with a company or organization. Use the link at *http://www.ecma-international.org/publications/standards/Ecma-368.htm* for the Specifier ID Register.

Implementors can request their own Specifier ID from the same URL.

These assigned numbers are referred to in 15.6.13, 16.4.7, 16.5.7, 16.8.1 and 16.8.2.

DRAFT 2009



Copyright International Organization for Standardization
Provided by IHS under license with ISO
No reproduction or networking permitted without license from IHS
Not for Resale

DRAFT 2009



Copyright International Organization for Standardization
Provided by IHS under license with ISO
No reproduction or networking permitted without license from IHS
Not for Resale

# Annex D
(informative)

# MAC test vectors

## D.1 KCK/PTK generation

Table D.1 - PTK and KCK generation input parameters

| Parameter | Value |
|---|---|
| InitiatorDevAddr | 0xDEAD |
| ResponderDevAddr | 0xBEEF |
| PTKID | 0xDEAD32 |
| I-Nonce | (Sequence of octets in hexadecimal in transmit order)<br>10 11 12 13 14 15 16 17 18 19 1A 1B 1C 1D 1E 1F |
| R-Nonce | (Sequence of octets in hexadecimal in transmit order)<br>20 21 22 23 24 25 26 27 28 29 2A 2B 2C 2D 2E 2F |
| PMK | (Sequence of octets in hexadecimal in operation order)<br>C0 C1 C2 C3 C4 C5 C6 C7 C8 C9 CA CB CC CD CE CF |

Table D.2 contains the KCK and PTK octet sequences generated from the parameters in Table D.1

Table D.2 - KCK and PTK

| Parameter | Value |
|---|---|
| KCK | (Sequence of octets in hexadecimal in operation order)<br>50 C9 32 81 90 3A 6E CB 3F 91 DC A8 57 05 59 DB |
| PTK | (Sequence of octets in hexadecimal in operation order)<br>D2 B6 FA 70 FD D1 00 84 B5 AB 1A F9 04 E7 5D CA |

DRAFT 0.09



Copyright International Organization for Standardization
Provided by IHS under license with ISO
No reproduction or networking permitted without license from IHS
Not for Resale

## D.2 4-way handshake MIC generation

Table D.3 - 4-way handshake MIC generation parameters

| Parameter | Value |
|---|---|
| InitiatorDevAddr | 0xDEAD |
| ResponderDevAddr | 0xBEEF |
| PTKID | 0xDEAD32 |
| Message Number | 2 (decimal) |
| Status Code | 0 (decimal) |
| MKID | (Sequence of octets in hexadecimal in transmit order)<br>F0 F1 F2 F3 F4 F5 F6 F7 F8 F9 FA FB FC FD FE FF |
| I-Nonce | (Sequence of octets in hexadecimal in transmit order)<br>10 11 12 13 14 15 16 17 18 19 1A 1B 1C 1D 1E 1F |
| R-Nonce | (Sequence of octets in hexadecimal in transmit order)<br>20 21 22 23 24 25 26 27 28 29 2A 2B 2C 2D 2E 2F |
| KCK | (Sequence of octets in hexadecimal in operation order)<br>50 C9 32 81 90 3A 6E CB 3F 91 DC A8 57 05 59 DB |

The octets comprising the frame payload of the PTK command frame, in the order passed to the PHY SAP, are:

| | | | | |
|---|---|---|---|---|
| 02 | | | | (Message Number) |
| 00 | | | | (Status Code) |
| 32 AD DE | | | | (PTKID) |
| 00 00 00 00 | 00 00 00 00 | 00 00 00 | | (Reserved) |
| F0 F1 F2 F3 | F4 F5 F6 F7 | F8 F9 FA FB | FC FD FE FF | (MKID) |
| 20 21 22 23 | 24 25 26 27 | 28 29 2A 2B | 2C 2D 2E 2F | (R-Nonce) |
| 74 5E 5C 73 | F8 86 26 DE | | | (MIC) |

DRAFT 2.0.9



Copyright International Organization for Standardization
Provided by IHS under license with ISO
No reproduction or networking permitted without license from IHS
Not for Resale

## D.3 Non-secure frame example

Table D.4 - Field values for a non-secure frame

| MAC Fields | | Value | |
|---|---|---|---|
| Frame Control | Protocol Version (b2-b0) | 0 | 0x00E0 |
| | Secure (b3) | 0 | |
| | ACK Policy (b5-b4) | 2 (B-ACK) | |
| | Frame Type (b8-b6) | 3 (Data) | |
| | Frame Subtype / Delivery ID (b12-b9) | 0 | |
| | Retry (b13) | 0 | |
| | Reserved (b15-b14) | 0 | |
| Dest Addr | | 0xBEEF | |
| SrcAddr | | 0xDEAD | |
| Sequence Control | Fragment Number (b2-b0) | 0 | 0x0178 |
| | Sequence Number (b13-b3) | 47 (decimal) | |
| | More Fragments (b14) | 0 | |
| | Reserved (b15) | 0 | |
| Access Information | Duration (b13-b0) | 52 (decimal) | 0x8034 |
| | More Frames (b14) | 0 | |
| | Access Method (b15) | 1 | |
| Payload | | (Sequence of octets in hexadecimal in transmit order)<br>00 01 02 03 04 05 06 07 08 09 0A 0B<br>0C 0D 0E 0F 10 11 12 13 | |

The octets comprising the MAC Header, the Frame Payload and the FCS are passed to the PHY SAP in the following order:

| | | | |
|---|---|---|---|
| E0 00 EF BE | AD DE 78 01 | 34 80 | (MAC Header) |
| 00 01 02 03 | 04 05 06 07 | 08 09 0A 0B | (Payload) |
| 0C 0D 0E 0F | 10 11 12 13 | | (Payload) |
| A4 FF DD 3B | | | (FCS) |

DRAFT 2009



Copyright International Organization for Standardization
Provided by IHS under license with ISO
No reproduction or networking permitted without license from IHS
Not for Resale

## D.4 Secure frame example with EO=0

Table D.5 - Field values for a secure frame with EO = 0

| MAC Fields | | Value | |
|---|---|---|---|
| Frame Control | Protocol Version (b2-b0) | 0 | 0x00E8 |
| | Secure (b3) | 1 | |
| | ACK Policy (b5-b4) | 2 (B-ACK) | |
| | Frame Type (b8-b6) | 3 (Data) | |
| | Frame Subtype / Delivery ID (b12-b9) | 0 | |
| | Retry (b13) | 0 | |
| | Reserved (b15-b14) | 0 | |
| Dest Addr | | 0xBEEF | |
| SrcAddr | | 0xDEAD | |
| Sequence Control | Fragment Number (b2-b0) | 0 | 0x0178 |
| | Sequence Number (b13-b3) | 47 (decimal) | |
| | More Fragments (b14) | 0 | |
| | Reserved (b15) | 0 | |
| Access Information | Duration (b13-b0) | 52 (decimal) | 0x8034 |
| | More Frames (b14) | 0 | |
| | Access Method (b15) | 1 | |
| Temporal Key Identifier | | 0xDEAD32 | |
| Encryption Offset | | 0 | 0x0000 |
| Secure Frame Number | | 0x001122334455 | |
| Payload | | (Sequence of octets in hexadecimal in transmit order)<br>00 01 02 03 04 05 06 07 08 09 0A 0B<br>0C 0D 0E 0F 10 11 12 13 | |

Using the PTK of 1, the octets comprising the MAC Header, the Security Header, the Secure Payload, the MIC and the FCS are passed to the PHY SAP in the following order:

| | | | |
|---|---|---|---|
| E8 00 EF BE | AD DE 78 01 | 34 80 | (MAC Header) |
| 32 AD DE 00 | 00 00 55 44 | 33 22 11 00 | (Security Header) |
| BA 68 93 02 | EE 86 0E 58 | A3 70 74 71 | (Secure Payload) |
| 60 E7 B5 95 | 51 8F F7 B5 | | (Secure Payload) |
| 2C 89 02 11 | F3 B1 37 0B | | (MIC) |
| E9 CB AB 31 | | | (FCS) |



Copyright International Organization for Standardization
Provided by IHS under license with ISO
No reproduction or networking permitted without license from IHS
Not for Resale

## D.5 Secure frame example with EO = payload length

Table D.6 - Field values for a secure frame with EO = payload length

| MAC Fields | | Value | |
|---|---|---|---|
| Frame Control | Protocol Version (b2-b0) | 0 | 0x00E8 |
| | Secure (b3) | 1 | |
| | ACK Policy (b5-b4) | 2 (B-ACK) | |
| | Frame Type (b8-b6) | 3 (Data) | |
| | Frame Subtype / Delivery ID (b12-b9) | 0 | |
| | Retry (b13) | 0 | |
| | Reserved (b15-b14) | 0 | |
| Dest Addr | | 0xBEEF | |
| SrcAddr | | 0xDEAD | |
| Sequence Control | Fragment Number (b2-b0) | 4 | 0x017C |
| | Sequence Number (b13-b3) | 47 (decimal) | |
| | More Fragments (b14) | 0 | |
| | Reserved (b15) | 0 | |
| Access Information | Duration (b13-b0) | 52 (decimal) | 0x8034 |
| | More Frames (b14) | 0 | |
| | Access Method (b15) | 1 | |
| Temporal Key Identifier | | 0xDEAD32 | |
| Encryption Offset | | 20 (decimal) | 0x0014 |
| Secure Frame Number | | 0x001122334456 | |
| Payload | | (Sequence of octets in hexadecimal in transmit order)<br>00 01 02 03 04 05 06 07 08 09 0A 0B<br>0C 0D 0E 0F 10 11 12 13 | |

Using the PTK of 1, the octets comprising the MAC Header, the Security Header, the Secure Payload, the MIC and the FCS are passed to the PHY SAP in the following order:

| | | | |
|---|---|---|---|
| E8 00 EF BE | AD DE 7C 01 | 34 80 | (MAC Header) |
| 32 AD DE 00 | 14 00 56 44 | 33 22 11 00 | (Security Header) |
| 00 01 02 03 | 04 05 06 07 | 08 09 0A 0B | (Secure Payload) |
| 0C 0D 0E 0F | 10 11 12 13 | | (Secure Payload) |
| EE C3 7E 15 | 3C AD 20 0F | | (MIC) |
| EE BF E7 0C | | | (FCS) |



Copyright International Organization for Standardization
Provided by IHS under license with ISO
No reproduction or networking permitted without license from IHS
Not for Resale

## D.6 Secure frame example with EO = 12

Table D.7 - Field values for a secure frame with EO = 12

| MAC Fields | | Value | |
|---|---|---|---|
| Frame Control | Protocol Version (b2-b0) | 0 | 0x00E8 |
| | Secure (b3) | 1 | |
| | ACK Policy (b5-b4) | 2 (B-ACK) | |
| | Frame Type (b8-b6) | 3 (Data) | |
| | Frame Subtype / Delivery ID (b12-b9) | 0 | |
| | Retry (b13) | 0 | |
| | Reserved (b15-b14) | 0 | |
| Dest Addr | | 0xBEEF | |
| SrcAddr | | 0xDEAD | |
| Sequence Control | Fragment Number (b2-b0) | 0 | 0x0180 |
| | Sequence Number (b13-b3) | 48 (decimal) | |
| | More Fragments (b14) | 0 | |
| | Reserved (b15) | 0 | |
| Access Information | Duration (b13-b0) | 52 (decimal) | 0x8034 |
| | More Frames (b14) | 0 | |
| | Access Method (b15) | 1 | |
| Temporal Key Identifier | | 0xDEAD32 | |
| Encryption Offset | | 12 (decimal) | 0x000C |
| Secure Frame Number | | 0x001122334457 | |
| Payload | | (Sequence of octets in hexadecimal in transmit order)<br>00 01 02 03 04 05 06 07 08 09 0A 0B<br>0C 0D 0E 0F 10 11 12 13 | |

Using the PTK of D.1, the octets comprising the MAC Header, the Security Header, the Secure Payload, the MIC and the FCS are passed to the PHY SAP in the following order:

| | | | |
|---|---|---|---|
| E8 00 EF BE | AD DE 80 01 | 34 80 | (MAC Header) |
| 32 AD DE 00 | 0C 00 57 44 | 33 22 11 00 | (Security Header) |
| 00 01 02 03 | 04 05 06 07 | 08 09 0A 0B | (Secure Payload) |
| 79 AF AC F2 | 3F 94 9A FB | | (Secure Payload) |
| 03 5D 76 0A | 32 8F 04 E6 | | (MIC) |
| E11 10 72 C2 | | | (FCS) |



Copyright International Organization for Standardization
Provided by IHS under license with ISO
No reproduction or networking permitted without license from IHS
Not for Resale

## D.7 Beacon frame example

Table D.8 - Field values for a beacon frame

| MAC Fields | | Value | |
|---|---|---|---|
| Frame Control | Protocol Version (b2-b0) | 0 | 0x0000 |
| | Secure (b3) | 0 | |
| | ACK Policy (b5-b4) | 0 (No-ACK) | |
| | Frame Type (b8-b6) | 0 (Beacon) | |
| | Frame Subtype / Delivery ID (b12-b9) | 0 | |
| | Retry (b13) | 0 | |
| | Reserved (b15-b14) | 0 | |
| Dest Addr | | 0xFFFF | |
| SrcAddr | | 0xDEAD | |
| Sequence Control | Fragment Number (b2-b0) | 0 | 0x0DF0 |
| | Sequence Number (b13-b3) | 446 (decimal) | |
| | More Fragments (b14) | 0 | |
| | Reserved (b15) | 0 | |
| Access Information | Duration (b13-b0) | 0 | 0x0000 |
| | More Frames (b14) | 0 | |
| | Access Method (b15) | 0 | |

The payload of a beacon frame consists of a Beacon Parameters field followed by a sequence of information elements.

Table D.9 - Field values for the Beacon Parameters field

| Beacon Parameters | | | | |
|---|---|---|---|---|
| | Device Identifier | | 00-14-EF-01-23-45 | (Sequence of octets in hexadecimal in transmit order) |
| | Beacon Slot Number | | 3 | 00 14 EF 01 23 45<br>03 80 |
| | Device Control | Movable (b0) | 0 | |
| | | Signalling Slot (b1) | 0 | |
| | | Reserved (b5-b2) | 0 | |
| | | Security (b7-b6) | 2 | |



Copyright International Organization for Standardization
Provided by IHS under license with ISO
No reproduction or networking permitted without license from IHS
Not for Resale

Table D.10 - Field values for a BPOIE

| | | | |
|---|---|---|---|
| BPOIE | Element ID | 1 | (Sequence of octets in hexadecimal in transmit order)<br><br>01 0B 0E 10 09 00 00 CE 0A 01 C0 FF FF |
| | Length | 11 (decimal) | |
| | BP Length | 14 (decimal) | |
| | Beacon Slot Info Bitmap | Slot 0: 0<br>Slot 1: 0<br>Slot 2: 1<br>Slot 3: 0<br>Slot 4: 1<br>Slot 5: 2<br>Slots 6-13: 0 | |
| | Dev Addrs | Slot 2: 0x0ACE<br>Slot 4: 0xC001<br>Slot 5: 0xFFFF | |

Table D.11 - Field values for a PCA Availability IE

| | | | |
|---|---|---|---|
| PCA Availability IE | Element ID | 2 | (Sequence of octets in hexadecimal in transmit order)<br><br>02 05 01 C0 FF FF 3F |
| | Length | 5 | |
| | Interpretation: TIM IE Required (b0) | 1 | |
| | Interpretation: Reserved (b7-b1) | 0 | |
| | PCA Availability Bitmap | Slots 0-5: 0<br>Slots 6-29: 1<br>Slots 30-255: 0 | |

DRAFT 2009



Copyright International Organization for Standardization
Provided by IHS under license with ISO
No reproduction or networking permitted without license from IHS
Not for Resale

Table D.12 - Field values for a DRP IE

| | | | | |
|---|---|---|---|---|
| DRP IE | Element ID | | 9 | (Sequence of octets in hexadecimal in transmit order)<br><br>09 08 19 0E CE 0A FE FF 00 C0 |
| | Length | | 8 | |
| | DRP Control | Reservation Type (b2-b0) | 1 (Hard) | |
| | | Stream Index (b5-b3) | 3 | |
| | | Reason Code (b8-b6) | 0 (Accepted) | |
| | | Reservation Status (b9) | 1 | |
| | | Owner (b10) | 1 | |
| | | Conflict Tiebreaker (b11) | 1 | |
| | | Unsafe (b12) | 0 | |
| | | Reserved (b15-b13) | 0 | |
| | Target/Owner DevAddr | | 0x0ACE | |
| | DRP Allocation 1 | Zone Bitmap | Zone 0: 0<br>Zones 1-15: 1 | |
| | | MAS Bitmap | MASs 0-13: 0<br>MASs 14-15: 1 | |

DRAFT 2009



Copyright International Organization for Standardization
Provided by IHS under license with ISO
No reproduction or networking permitted without license from IHS
Not for Resale

Table D.13 - Field values for a MAC Capabilities IE

| MAC Capabilities IE | Element ID | | 12 (decimal) | (Sequence of octets in hexadecimal in transmit order) |
|---|---|---|---|---|
| | Length | | 2 | |
| | MAC Capability Bitmap (octet 0) | PCA (b0) | 1 | 0C 02 8B 01 |
| | | Hard DRP (b1) | 1 | |
| | | Soft DRP (b2) | 0 | |
| | | Block ACK (b3) | 1 | |
| | | Explicit DRP negotiation (b4) | 0 | |
| | | Hibernation anchor (b5) | 0 | |
| | | Probe (b6) | 0 | |
| | | Link feedback (b7) | 1 | |
| | MAC Capability Bitmap (octet 1) | Range measurement (b0) | 1 | |
| | | Reserved (b7-b1) | 0 | |

Table D.14 - Field values for an Identification IE

| MAC Capabilities IE | Element ID | | 19 (decimal) | (Sequence of octets in hexadecimal in transmit order) |
|---|---|---|---|---|
| | Length | | 19 (decimal) | |
| | Device Information 1 | Device Information Type | 0 (PHY ID) | 13 13 00 03 00 14 EF 02 0C 4D 00 61 00 63 00 44 00 65 00 76 00 |
| | | Device Information Length | 3 | |
| | | Device Information Data | 00-14-EF | |
| | Device Information 2 | Device Information Type | 2 (Name String) | |
| | | Device Information Length | 12 (decimal) | |
| | | Device Information Data | "MacDev" | |

The octets comprising the MAC Header, the Frame Payload and the FCS are passed to the PHY SAP in the following order:

| | | | |
|---|---|---|---|
| 00 00 FF FF | AD DE F0 0D | 00 00 | (MAC Header) |
| 00 14 EF 01 | 23 45 03 80 | | (Payload - Beacon Parameters) |
| 01 0B 0E 10 | 09 00 00 CE | 0A 01 C0 FF | (BPOIE) |



Copyright International Organization for Standardization
Provided by IHS under license with ISO
No reproduction or networking permitted without license from IHS
Not for Resale

| | | | |
|---|---|---|---|
| FF | | | |
| 02 05 01 C0 | FF FF 3F | | (PCA Availability IE) |
| 09 08 19 0E | CE 0A FE FF | 00 C0 | (DRP IE) |
| 0C 02 8B 01 | | | (MAC Capabilities IE) |
| 13 13 00 03 | 00 14 EF 02 | 0C 4D 00 61 | (Identification IE) |
| 00 63 00 44 | 00 65 00 76 | 00 | |
| 4B B5 CA 2F | | | (FCS) |

## D.8 FCS field example

This Clause provides details of the CRC polynomials in the FCS field calculation described in 16.2.7 for the secure frame example in 4.

The frame payload expressed in hexadecimal form, in the order the octets are delivered to the PHY SAP, is:

| | | | |
|---|---|---|---|
| 32 AD DE 00 | 00 00 55 44 | 33 22 11 00 | BA 68 93 02 |
| EE 86 0E 58 | A3 70 74 71 | 60 E7 B5 95 | 51 8F F7 B5 |
| 2C 89 02 11 | F3 B1 37 0B | | |

The coefficients of the terms of the corresponding message polynomial, from the highest-order to the lowest-order term, are:

0100 1100 1011 0101 0111 1011 0000 0000 ... 1100 1111 1000 1101 1110 1100 1101 0000

The message polynomial is:

$x^{318} + x^{315} + x^{314} + x^{311} + x^{309} + x^{308} + x^{306} + x^{304} + x^{302} + x^{301} + x^{300} + x^{299} + x^{297} + x^{296} + \ldots + x^{31} + x^{30} + x^{27} + x^{26} + x^{25} + x^{24} + x^{23} + x^{19} + x^{18} + x^{16} + x^{15} + x^{14} + x^{13} + x^{11} + x^{10} + x^{7} + x^{6} + x^{4}$

The CRC calculation results in the following polynomial:

$x^{31} + x^{28} + x^{26} + x^{25} + x^{24} + x^{23} + x^{22} + x^{20} + x^{17} + x^{16} + x^{15} + x^{14} + x^{12} + x^{10} + x^{8} + x^{7} + x^{3} + x^{2}$

The corresponding coefficients are:

1001 0111 1101 0011 1101 0101 1000 1100

The FCS field expressed in hexadecimal form, in the order delivered to the PHY SAP, is:

E9 CB AB 31



Copyright International Organization for Standardization
Provided by IHS under license with ISO
No reproduction or networking permitted without license from IHS
Not for Resale

DRAFT 2009



Copyright International Organization for Standardization
Provided by IHS under license with ISO
No reproduction or networking permitted without license from IHS
Not for Resale

# Annex E
(informative)

# Example encoding of a PHY packet

## E.1 Introduction

In this Annex, an example test vector for a 40-octet payload transmitted at 200 Mb/s is provided. Note that in this example some of the intermediate data has been excluded for purposes of clarity, but the entire packet at the output of the transmitter is shown in E.2.3. The packet shall be created as defined in Figure 6, where the Standard PLCP preamble is created as defined in Figure 7 and Figure 8, the PLCP header is created as defined in Figure 11 and Figure 12, and the PSDU is created as defined in Figure 16 and Figure 17.

## E.2 Example device parameters

The device parameters for this example are enumerated in Table E.1.

### E.2.1 PHY header

The PHY header is a non-scrambled 5-octet field as defined in 10.3.1. Based on the parameters listed in Table E.1, the PHY header is described in bits as:

phyHeader = [ 0 0 0
0 0 1 0 0 (Data Rate)
0 0 0 1 0 1 0 0 0 0 0 0 (Length in Octets)
0 0
0 1 (Scrambler Seed)
0 0
1 (Burst Mode)
0 (Preamble Type)
1 0 0 (TX_TFC[T1..T3])
1 (BG_LSB)
0 0
0 (TX_TFC[T4])
0 0 0 0 0 ], (52)

or, equivalently in octets as 20 28 80 94 00.

Table E.1 - Example PHY Parameters

| Parameter | Value |
|---|---|
| Time Frequency Code (TFC) | 1 |
| Band Group | 1 |
| Preamble Mode | Standard |
| Data Rate | 200 Mb/s |
| Modulation | QPSK |
| Coding Rate | 5/8 |
| FDS | NO |



Copyright International Organization for Standardization
Provided by IHS under license with ISO
No reproduction or networking permitted without license from IHS
Not for Resale

Table E.1 - Example PHY Parameters (concluded)

| Parameter | Value |
|---|---|
| TDS | YES |
| RATE Bits (R1:R5) | 00100 |
| LENGTH | 40 octets |
| SCRAMBLER (S1:S2) | 01 |
| Preamble Type (PT) Bit | ZERO |
| Burst Mode (BM) Bit | ONE |

#### E.2.1.1 MAC header

The MAC header is a 10-octet field and for this example is given by:

D3 C2 36 8C 8F 36 0D BB ED BA (53)

The bit representation for the MAC Header is shown in Table E.2.

DRAFT 2009



Copyright International Organization for Standardization
Provided by IHS under license with ISO
No reproduction or networking permitted without license from IHS
Not for Resale

Table E.2 - MAC Header in Bits

| # | | # | | # | | # | |
|---|---|---|---|---|---|---|---|
| 1 | 1 | 21 | 1 | 41 | 0 | 61 | 1 |
| 2 | 1 | 22 | 1 | 42 | 1 | 62 | 1 |
| 3 | 0 | 23 | 0 | 43 | 1 | 63 | 0 |
| 4 | 0 | 24 | 0 | 44 | 0 | 64 | 1 |
| 5 | 1 | 25 | 0 | 45 | 1 | 65 | 1 |
| 6 | 0 | 26 | 0 | 46 | 1 | 66 | 0 |
| 7 | 1 | 27 | 1 | 47 | 0 | 67 | 1 |
| 8 | 1 | 28 | 1 | 48 | 0 | 68 | 1 |
| 9 | 0 | 29 | 0 | 49 | 1 | 69 | 0 |
| 10 | 1 | 30 | 0 | 50 | 0 | 70 | 1 |
| 11 | 0 | 31 | 0 | 51 | 1 | 71 | 1 |
| 12 | 0 | 32 | 1 | 52 | 1 | 72 | 1 |
| 13 | 0 | 33 | 1 | 53 | 0 | 73 | 0 |
| 14 | 0 | 34 | 1 | 54 | 0 | 74 | 1 |
| 15 | 1 | 35 | 1 | 55 | 0 | 75 | 0 |
| 16 | 1 | 36 | 1 | 56 | 0 | 76 | 1 |
| 17 | 0 | 37 | 0 | 57 | 1 | 77 | 1 |
| 18 | 1 | 38 | 0 | 58 | 1 | 78 | 1 |
| 19 | 1 | 39 | 0 | 59 | 0 | 79 | 0 |
| 20 | 0 | 40 | 1 | 60 | 1 | 80 | 1 |

#### E.2.1.2 Generation of the HCS

The HCS is computed over the PHY and the MAC header using a 16-bit CRC as described in 10.3.3. HCS is calculated without the tail bits inserted between the PHY and MAC header. The resulting HCS is given by in bit representation as:

$$1\,1\,0\,1\,1\,1\,0\,0\,0\,0\,1\,0\,1\,0\,1\,1 \qquad (54)$$

The resulting 2 octets are appended to the end of the MAC header.

#### E.2.1.3 PLCP header

The PHY header and a scrambled version of the MAC header and HCS are encoded using a shortened Reed-Solomon (23,17) code as defined in 10.3.2. The Reed-Solomon message octets are given in Table E.3. The resulting Reed-Solomon parity octets are listed in Table E.4.

DRAFT



Copyright International Organization for Standardization
Provided by IHS under license with ISO
No reproduction or networking permitted without license from IHS
Not for Resale

Table E.3 - Reed-Solomon Message Octets

| $m_i$ | Octet Value |
|---|---|
| $m_{16}$ | 20 |
| $m_{15}$ | 28 |
| $m_{14}$ | 80 |
| $m_{13}$ | 94 |
| $m_{12}$ | 00 |
| $m_{11}$ | D3 |
| $m_{10}$ | E2 |
| $m_9$ | 36 |
| $m_8$ | 94 |
| $m_7$ | 8F |
| $m_6$ | 3C |
| $m_5$ | 8D |
| $m_4$ | BC |
| $m_3$ | CD |
| $m_2$ | B8 |
| $m_1$ | A3 |
| $m_0$ | D5 |

Table E.4 - Reed-Solomon Parity Octets

| $r_i$ | Octet Value |
|---|---|
| $r_5$ | BC |
| $r_4$ | 6E |
| $r_3$ | DF |
| $r_2$ | A9 |
| $r_1$ | 5E |
| $r_0$ | BD |

### E.2.2 Frame payload transmission

The frame payload that is transmitted in this example is given in the table below:

Table E.5 - 40-octet Payload

| # | | # | | # | | # | |
|---|---|---|---|---|---|---|---|
| 1 | 7B | 11 | 2B | 21 | 92 | 31 | FB |
| 2 | B1 | 12 | D5 | 22 | DD | 32 | 56 |
| 3 | C0 | 13 | 6E | 23 | 11 | 33 | 78 |
| 4 | 0A | 14 | E7 | 24 | 9E | 34 | E5 |
| 5 | AB | 15 | 02 | 25 | B2 | 35 | DC |
| 6 | 87 | 16 | E2 | 26 | BA | 36 | 29 |
| 7 | 44 | 17 | F6 | 27 | AE | 37 | F5 |



Copyright International Organization for Standardization
Provided by IHS under license with ISO
No reproduction or networking permitted without license from IHS
Not for Resale

Table E.5 - 40-octet Payload (concluded)

| | | | | | | | |
|---|---|---|---|---|---|---|---|
| 8 | 71 | 18 | EA | 28 | 59 | 38 | CC |
| 9 | 33 | 19 | 0E | 29 | A4 | 39 | 00 |
| 10 | C1 | 20 | A5 | 30 | 08 | 40 | 3C |

The FCS for the 40-octet message as presented to the PHY SAP is given below in octet format

DE 89 E6 B2 (55)

The FCS along with tail bits and potentially pad bits are then appended to the frame payload to create the PSDU.

### E.2.3 Complete transmitted packet

The symbol structure for the entire transmitted packet transmission is shown in Table E.6, where selected symbols of the packet are shown in Table E.7 through Table E.26. Each table describes exactly one symbol (165 complex values). Note that the length of this packet is exactly 48 symbols.

Table E.6 - Symbol structure for entire packet

| Symbol Number | Description |
|---|---|
| 1 | 1st Packet/Frame Synchronization Sequence (samples 1 – 165) |
| 2:24 | Modulated version of Symbol 1: modulation depends on Cover Sequence (symbols not shown) |
| 25 | Channel Estimation Sequence (samples 3 961 – 4 125) |
| 26:30 | Same as Symbol 25 (symbols not shown) |
| 31:42 | PLCP header (samples 4 951 – 6 930) |
| 43:end | Payload (samples 6 931 – 7 913) |

DRAFT 2005



Copyright International Organization for Standardization
Provided by IHS under license with ISO
No reproduction or networking permitted without license from IHS
Not for Resale

Table E.7 - Time-domain sequence for Symbol #1

| # | Real | Imag | # | Real | Imag | # | Real | Imag |
|---|---|---|---|---|---|---|---|---|
| 1 | 7,250 2 | 0 | 56 | 13,937 0 | 0 | 111 | 4,237 0 | 0 |
| 2 | -15,100 1 | 0 | 57 | 6,598 5 | 0 | 112 | -12,682 3 | 0 |
| 3 | -10,999 0 | 0 | 58 | -12,123 4 | 0 | 113 | -0,389 9 | 0 |
| 4 | -15,442 5 | 0 | 59 | -10,797 9 | 0 | 114 | -7,452 3 | 0 |
| 5 | 9,367 6 | 0 | 60 | -11,025 5 | 0 | 115 | -12,871 2 | 0 |
| 6 | 12,030 6 | 0 | 61 | 9,904 4 | 0 | 116 | -9,826 0 | 0 |
| 7 | -9,522 2 | 0 | 62 | 19,484 0 | 0 | 117 | 2,666 4 | 0 |
| 8 | 12,715 4 | 0 | 63 | -11,278 4 | 0 | 118 | 1,281 3 | 0 |
| 9 | 10,605 8 | 0 | 64 | 18,681 0 | 0 | 119 | -7,717 4 | 0 |
| 10 | -15,000 7 | 0 | 65 | -2,314 0 | 0 | 120 | 5,280 8 | 0 |
| 11 | -9,227 3 | 0 | 66 | 12,856 8 | 0 | 121 | 2,011 4 | 0 |
| 12 | -14,634 0 | 0 | 67 | 13,623 3 | 0 | 122 | -11,787 6 | 0 |
| 13 | 12,110 1 | 0 | 68 | 16,941 4 | 0 | 123 | -10,687 5 | 0 |
| 14 | 14,727 9 | 0 | 69 | -9,768 5 | 0 | 124 | -13,609 0 | 0 |
| 15 | -8,149 3 | 0 | 70 | -4,260 2 | 0 | 125 | 5,526 0 | 0 |
| 16 | 14,983 0 | 0 | 71 | 8,538 1 | 0 | 126 | 8,194 6 | 0 |
| 17 | 10,339 6 | 0 | 72 | -10,773 6 | 0 | 127 | -9,867 9 | 0 |
| 18 | -9,070 5 | 0 | 73 | -2,557 0 | 0 | 128 | 9,268 2 | 0 |
| 19 | -2,940 3 | 0 | 74 | 6,162 2 | 0 | 129 | 0 | 0 |
| 20 | -7,583 7 | 0 | 75 | 4,456 8 | 0 | 130 | 0 | 0 |
| 21 | 9,319 0 | 0 | 76 | 4,692 1 | 0 | 131 | 0 | 0 |
| 22 | 12,411 7 | 0 | 77 | -3,710 1 | 0 | 132 | 0 | 0 |
| 23 | -3,606 3 | 0 | 78 | -10,950 4 | 0 | 133 | 0 | 0 |
| 24 | 11,609 8 | 0 | 79 | 6,599 6 | 0 | 134 | 0 | 0 |
| 25 | 8,755 7 | 0 | 80 | -9,286 9 | 0 | 135 | 0 | 0 |
| 26 | -3,714 6 | 0 | 81 | 3,962 0 | 0 | 136 | 0 | 0 |
| 27 | -1,482 3 | 0 | 82 | -10,608 0 | 0 | 137 | 0 | 0 |
| 28 | -1,707 6 | 0 | 83 | -11,047 6 | 0 | 138 | 0 | 0 |
| 29 | 7,682 0 | 0 | 84 | -12,852 4 | 0 | 139 | 0 | 0 |
| 30 | 11,716 9 | 0 | 85 | 10,592 5 | 0 | 140 | 0 | 0 |
| 31 | -1,767 3 | 0 | 86 | 7,883 1 | 0 | 141 | 0 | 0 |
| 32 | 10,429 0 | 0 | 87 | -7,484 3 | 0 | 142 | 0 | 0 |
| 33 | -0,932 2 | 0 | 88 | 10,851 0 | 0 | 143 | 0 | 0 |
| 34 | 13,225 7 | 0 | 89 | -6,024 1 | 0 | 144 | 0 | 0 |
| 35 | 13,542 7 | 0 | 90 | 12,174 2 | 0 | 145 | 0 | 0 |
| 36 | 15,906 4 | 0 | 91 | 18,208 3 | 0 | 146 | 0 | 0 |
| 37 | -6,614 0 | 0 | 92 | 14,698 1 | 0 | 147 | 0 | 0 |
| 38 | -5,163 7 | 0 | 93 | -14,195 5 | 0 | 148 | 0 | 0 |
| 39 | 9,410 6 | 0 | 94 | -13,982 3 | 0 | 149 | 0 | 0 |



--`,,```,,,,````-`-`,,`,,`,`,,`---

Copyright International Organization for Standardization
Provided by IHS under license with ISO
No reproduction or networking permitted without license from IHS

Not for Resale

Table E.7 - Time-domain sequence for Symbol #1 (concluded)

| | | | | | | | | |
|---|---|---|---|---|---|---|---|---|
| 40 | -9,854 7 | 0 | 95 | 10,421 3 | 0 | 150 | 0 | 0 |
| 41 | -6,188 7 | 0 | 96 | -18,566 1 | 0 | 151 | 0 | 0 |
| 42 | 13,128 5 | 0 | 97 | 4,674 4 | 0 | 152 | 0 | 0 |
| 43 | 12,291 3 | 0 | 98 | -14,009 9 | 0 | 153 | 0 | 0 |
| 44 | 11,965 4 | 0 | 99 | -20,048 4 | 0 | 154 | 0 | 0 |
| 45 | -10,021 5 | 0 | 100 | -16,379 2 | 0 | 155 | 0 | 0 |
| 46 | -17,923 3 | 0 | 101 | 11,378 9 | 0 | 156 | 0 | 0 |
| 47 | 11,059 7 | 0 | 102 | 10,403 6 | 0 | 157 | 0 | 0 |
| 48 | -17,746 6 | 0 | 103 | -12,671 2 | 0 | 158 | 0 | 0 |
| 49 | 3,711 2 | 0 | 104 | 16,411 2 | 0 | 159 | 0 | 0 |
| 50 | -14,509 2 | 0 | 105 | -7,504 2 | 0 | 160 | 0 | 0 |
| 51 | -15,957 2 | 0 | 106 | 10,573 7 | 0 | 161 | 0 | 0 |
| 52 | -19,040 0 | 0 | 107 | 11,936 7 | 0 | 162 | 0 | 0 |
| 53 | 11,362 4 | 0 | 108 | 12,641 4 | 0 | 163 | 0 | 0 |
| 54 | 6,737 7 | 0 | 109 | -13,599 0 | 0 | 164 | 0 | 0 |
| 55 | -10,202 6 | 0 | 110 | -7,337 4 | 0 | 165 | 0 | 0 |

DRAFT ECMA



Copyright International Organization for Standardization
Provided by IHS under license with ISO
No reproduction or networking permitted without license from IHS
Not for Resale

Table E.8 - Time-domain sequence for Symbol #25

| # | Real | Imag | # | Real | Imag | # | Real | Imag |
|---|---|---|---|---|---|---|---|---|
| 3 961 | 9,899 5 | 0 | 4 016 | 13,598 6 | 0 | 4 071 | 0,711 6 | 0 |
| 3 962 | -7,256 2 | 0 | 4 017 | 3,781 8 | 0 | 4 072 | 12,003 7 | 0 |
| 3 963 | -8,497 6 | 0 | 4 018 | 9,404 1 | 0 | 4 073 | 13,171 6 | 0 |
| 3 964 | 7,025 7 | 0 | 4 019 | -8,819 7 | 0 | 4 074 | 0,300 3 | 0 |
| 3 965 | 0,392 8 | 0 | 4 020 | -2,290 2 | 0 | 4 075 | 5,754 8 | 0 |
| 3 966 | 17,703 0 | 0 | 4 021 | 19,980 6 | 0 | 4 076 | 12,107 7 | 0 |
| 3 967 | -11,790 1 | 0 | 4 022 | -2,060 4 | 0 | 4 077 | 9,303 4 | 0 |
| 3 968 | 12,309 1 | 0 | 4 023 | -6,113 9 | 0 | 4 078 | -8,281 7 | 0 |
| 3 969 | -11,756 3 | 0 | 4 024 | -10,855 1 | 0 | 4 079 | 14,356 0 | 0 |
| 3 970 | 5,331 7 | 0 | 4 025 | -9,899 5 | 0 | 4 080 | -16,592 1 | 0 |
| 3 971 | 7,292 3 | 0 | 4 026 | 3,849 9 | 0 | 4 081 | 12,703 5 | 0 |
| 3 972 | -2,596 8 | 0 | 4 027 | 5,920 5 | 0 | 4 082 | -2,242 8 | 0 |
| 3 973 | 16,749 3 | 0 | 4 028 | 16,248 7 | 0 | 4 083 | 6,758 5 | 0 |
| 3 974 | -3,823 5 | 0 | 4 029 | 4,913 2 | 0 | 4 084 | 8,742 2 | 0 |
| 3 975 | -2,271 7 | 0 | 4 030 | -15,280 5 | 0 | 4 085 | -7,621 5 | 0 |
| 3 976 | -0,080 8 | 0 | 4 031 | 11,670 6 | 0 | 4 086 | -0,099 1 | 0 |
| 3 977 | 6,000 0 | 0 | 4 032 | 6,578 9 | 0 | 4 087 | -9,980 5 | 0 |
| 3 978 | -12,872 2 | 0 | 4 033 | 4,927 9 | 0 | 4 088 | 13,409 1 | 0 |
| 3 979 | -12,999 7 | 0 | 4 034 | 6,795 8 | 0 | 4 089 | 0 | 0 |
| 3 980 | -7,554 1 | 0 | 4 035 | -2,812 9 | 0 | 4 090 | 0 | 0 |
| 3 981 | 17,424 9 | 0 | 4 036 | -15,693 9 | 0 | 4 091 | 0 | 0 |
| 3 982 | -12,291 5 | 0 | 4 037 | -18,225 4 | 0 | 4 092 | 0 | 0 |
| 3 983 | -3,980 2 | 0 | 4 038 | -13,465 3 | 0 | 4 093 | 0 | 0 |
| 3 984 | 17,418 6 | 0 | 4 039 | -15,821 4 | 0 | 4 094 | 0 | 0 |
| 3 985 | 0,559 7 | 0 | 4 040 | -12,971 6 | 0 | 4 095 | 0 | 0 |
| 3 986 | -11,305 5 | 0 | 4 041 | -6,000 0 | 0 | 4 096 | 0 | 0 |
| 3 987 | -20,268 7 | 0 | 4 042 | 13,953 8 | 0 | 4 097 | 0 | 0 |
| 3 988 | -12,585 2 | 0 | 4 043 | -4,030 9 | 0 | 4 098 | 0 | 0 |
| 3 989 | -0,732 8 | 0 | 4 044 | -16,536 9 | 0 | 4 099 | 0 | 0 |
| 3 990 | 18,688 1 | 0 | 4 045 | 9,057 2 | 0 | 4 100 | 0 | 0 |
| 3 991 | 1,350 8 | 0 | 4 046 | -7,599 1 | 0 | 4 101 | 0 | 0 |
| 3 992 | -10,986 4 | 0 | 4 047 | 7,567 7 | 0 | 4 102 | 0 | 0 |
| 3 993 | 18,384 8 | 0 | 4 048 | 0,710 3 | 0 | 4 103 | 0 | 0 |
| 3 994 | -3,466 2 | 0 | 4 049 | -0,074 4 | 0 | 4 104 | 0 | 0 |
| 3 995 | -0,916 3 | 0 | 4 050 | 15,758 9 | 0 | 4 105 | 0 | 0 |
| 3 996 | 2,091 1 | 0 | 4 051 | -16,763 6 | 0 | 4 106 | 0 | 0 |
| 3 997 | -13,933 1 | 0 | 4 052 | -5,454 3 | 0 | 4 107 | 0 | 0 |
| 3 998 | -18,009 5 | 0 | 4 053 | 10,030 5 | 0 | 4 108 | 0 | 0 |
| 3 999 | 5,953 0 | 0 | 4 054 | 13,822 6 | 0 | 4 109 | 0 | 0 |



Copyright International Organization for Standardization
Provided by IHS under license with ISO
No reproduction or networking permitted without license from IHS
Not for Resale

Table E.8 - Time-domain sequence for Symbol #25 (concluded)

| | | | | | | | | |
|---|---|---|---|---|---|---|---|---|
| 4 000 | 8,222 1 | 0 | 4 055 | -1,722 4 | 0 | 4 110 | 0 | 0 |
| 4 001 | -15,858 3 | 0 | 4 056 | 16,196 3 | 0 | 4 111 | 0 | 0 |
| 4 002 | 5,545 9 | 0 | 4 057 | -1,414 2 | 0 | 4 112 | 0 | 0 |
| 4 003 | -14,449 1 | 0 | 4 058 | -9,248 4 | 0 | 4 113 | 0 | 0 |
| 4 004 | -2,293 3 | 0 | 4 059 | 17,304 9 | 0 | 4 114 | 0 | 0 |
| 4 005 | -9,606 6 | 0 | 4 060 | -5,893 1 | 0 | 4 115 | 0 | 0 |
| 4 006 | -14,018 8 | 0 | 4 061 | -17,716 1 | 0 | 4 116 | 0 | 0 |
| 4 007 | 13,161 2 | 0 | 4 062 | -11,728 5 | 0 | 4 117 | 0 | 0 |
| 4 008 | -8,965 7 | 0 | 4 063 | 1,041 3 | 0 | 4 118 | 0 | 0 |
| 4 009 | -18,828 4 | 0 | 4 064 | 14,632 4 | 0 | 4 119 | 0 | 0 |
| 4 010 | -10,138 8 | 0 | 4 065 | 17,029 9 | 0 | 4 120 | 0 | 0 |
| 4 011 | -4,476 8 | 0 | 4 066 | 4,962 2 | 0 | 4 121 | 0 | 0 |
| 4 012 | 0,070 5 | 0 | 4 067 | -16,878 1 | 0 | 4 122 | 0 | 0 |
| 4 013 | 1,871 3 | 0 | 4 068 | 15,239 3 | 0 | 4 123 | 0 | 0 |
| 4 014 | 15,928 3 | 0 | 4 069 | 0,739 5 | 0 | 4 124 | 0 | 0 |
| 4 015 | 18,495 4 | 0 | 4 070 | -14,111 5 | 0 | 4 125 | 0 | 0 |

DRAFT ECMA



Copyright International Organization for Standardization
Provided by IHS under license with ISO
No reproduction or networking permitted without license from IHS
Not for Resale

Table E.9 - Time-domain sequence for Symbol #31

| # | Real | Imag | # | Real | Imag | # | Real | Imag |
|---|---|---|---|---|---|---|---|---|
| 4 951 | -24,041 6 | 0 | 5 006 | 4,945 8 | 0 | 5 061 | 5,146 5 | 0 |
| 4 952 | 17,093 4 | 0 | 5 007 | -1,372 1 | 0 | 5 062 | 4,055 9 | 0 |
| 4 953 | -10,188 5 | 0 | 5 008 | -0,313 6 | 0 | 5 063 | 2,000 0 | 0 |
| 4 954 | -3,791 7 | 0 | 5 009 | 0,829 3 | 0 | 5 064 | -10,875 7 | 0 |
| 4 955 | 6,111 3 | 0 | 5 010 | -21,867 7 | 0 | 5 065 | 26,801 5 | 0 |
| 4 956 | 3,168 5 | 0 | 5 011 | 23,862 6 | 0 | 5 066 | 11,900 7 | 0 |
| 4 957 | -4,379 5 | 0 | 5 012 | 19,146 9 | 0 | 5 067 | -5,922 4 | 0 |
| 4 958 | -18,124 9 | 0 | 5 013 | -9,953 2 | 0 | 5 068 | 4,835 9 | 0 |
| 4 959 | 0,865 9 | 0 | 5 014 | 11,044 2 | 0 | 5 069 | 22,865 1 | 0 |
| 4 960 | 17,061 0 | 0 | 5 015 | -4,242 6 | 0 | 5 070 | -5,862 9 | 0 |
| 4 961 | 5,475 3 | 0 | 5 016 | -28,150 2 | 0 | 5 071 | -3,799 5 | 0 |
| 4 962 | 6,869 4 | 0 | 5 017 | -10,986 2 | 0 | 5 072 | -0,738 1 | 0 |
| 4 963 | 8,705 9 | 0 | 5 018 | -0,525 7 | 0 | 5 073 | 8,617 4 | 0 |
| 4 964 | 5,613 9 | 0 | 5 019 | -9,962 5 | 0 | 5 074 | -4,699 7 | 0 |
| 4 965 | 16,472 4 | 0 | 5 020 | -1,596 8 | 0 | 5 075 | -11,580 8 | 0 |
| 4 966 | -11,353 8 | 0 | 5 021 | 4,790 4 | 0 | 5 076 | -20,124 2 | 0 |
| 4 967 | 5,171 6 | 0 | 5 022 | 6,034 4 | 0 | 5 077 | -13,119 4 | 0 |
| 4 968 | 0,828 1 | 0 | 5 023 | -0,664 9 | 0 | 5 078 | 10,039 4 | 0 |
| 4 969 | -13,324 3 | 0 | 5 024 | -16,643 2 | 0 | 5 079 | 0 | 0 |
| 4 970 | 12,766 5 | 0 | 5 025 | 6,445 8 | 0 | 5 080 | 0 | 0 |
| 4 971 | -8,500 5 | 0 | 5 026 | 7,996 1 | 0 | 5 081 | 0 | 0 |
| 4 972 | 0,235 5 | 0 | 5 027 | 8,193 3 | 0 | 5 082 | 0 | 0 |
| 4 973 | 14,946 6 | 0 | 5 028 | -2,774 2 | 0 | 5 083 | 0 | 0 |
| 4 974 | 1,926 2 | 0 | 5 029 | -9,291 1 | 0 | 5 084 | 0 | 0 |
| 4 975 | -2,742 2 | 0 | 5 030 | -4,107 4 | 0 | 5 085 | 0 | 0 |
| 4 976 | 12,660 4 | 0 | 5 031 | -10,828 4 | 0 | 5 086 | 0 | 0 |
| 4 977 | 21,444 5 | 0 | 5 032 | 17,594 5 | 0 | 5 087 | 0 | 0 |
| 4 978 | 14,554 8 | 0 | 5 033 | -0,206 3 | 0 | 5 088 | 0 | 0 |
| 4 979 | 23,842 5 | 0 | 5 034 | 3,034 4 | 0 | 5 089 | 0 | 0 |
| 4 980 | -7,132 0 | 0 | 5 035 | 4,936 9 | 0 | 5 090 | 0 | 0 |
| 4 981 | 3,192 8 | 0 | 5 036 | -23,943 5 | 0 | 5 091 | 0 | 0 |
| 4 982 | -11,724 0 | 0 | 5 037 | 1,595 8 | 0 | 5 092 | 0 | 0 |
| 4 983 | 9,899 5 | 0 | 5 038 | -4,266 5 | 0 | 5 093 | 0 | 0 |
| 4 984 | 12,001 2 | 0 | 5 039 | 13,570 6 | 0 | 5 094 | 0 | 0 |
| 4 985 | -5,672 2 | 0 | 5 040 | 8,634 2 | 0 | 5 095 | 0 | 0 |
| 4 986 | 0,851 2 | 0 | 5 041 | 7,341 1 | 0 | 5 096 | 0 | 0 |
| 4 987 | -4,405 7 | 0 | 5 042 | 10,494 7 | 0 | 5 097 | 0 | 0 |
| 4 988 | -4,256 3 | 0 | 5 043 | 0,160 0 | 0 | 5 098 | 0 | 0 |
| 4 989 | 12,590 5 | 0 | 5 044 | -5,029 7 | 0 | 5 099 | 0 | 0 |



Copyright International Organization for Standardization
Provided by IHS under license with ISO
No reproduction or networking permitted without license from IHS
Not for Resale

Table E.9 - Time-domain sequence for Symbol #31 (concluded)

| | | | | | | | | |
|---|---|---|---|---|---|---|---|---|
| 4 990 | 15,079 9 | 0 | 5 045 | -21,820 9 | 0 | 5 100 | 0 | 0 |
| 4 991 | -21,747 3 | 0 | 5 046 | -7,106 5 | 0 | 5 101 | 0 | 0 |
| 4 992 | -6,828 7 | 0 | 5 047 | -9,899 5 | 0 | 5 102 | 0 | 0 |
| 4 993 | -10,080 5 | 0 | 5 048 | 9,373 6 | 0 | 5 103 | 0 | 0 |
| 4 994 | 7,184 9 | 0 | 5 049 | -2,607 9 | 0 | 5 104 | 0 | 0 |
| 4 995 | 0,404 1 | 0 | 5 050 | -5,587 6 | 0 | 5 105 | 0 | 0 |
| 4 996 | -6,577 3 | 0 | 5 051 | -0,713 6 | 0 | 5 106 | 0 | 0 |
| 4 997 | 8,686 5 | 0 | 5 052 | 8,616 8 | 0 | 5 107 | 0 | 0 |
| 4 998 | 4,465 9 | 0 | 5 053 | -4,333 3 | 0 | 5 108 | 0 | 0 |
| 4 999 | -2,000 0 | 0 | 5 054 | -4,418 3 | 0 | 5 109 | 0 | 0 |
| 5 000 | -13,178 6 | 0 | 5 055 | -18,051 7 | 0 | 5 110 | 0 | 0 |
| 5 001 | -4,502 4 | 0 | 5 056 | -9,145 7 | 0 | 5 111 | 0 | 0 |
| 5 002 | 8,665 9 | 0 | 5 057 | 3,240 9 | 0 | 5 112 | 0 | 0 |
| 5 003 | -15,484 6 | 0 | 5 058 | 6,781 2 | 0 | 5 113 | 0 | 0 |
| 5 004 | -14,373 8 | 0 | 5 059 | 2,981 0 | 0 | 5 114 | 0 | 0 |
| 5 005 | -4,761 9 | 0 | 5 060 | -10,437 2 | 0 | 5 115 | 0 | 0 |

DRAFT



Copyright International Organization for Standardization
Provided by IHS under license with ISO
No reproduction or networking permitted without license from IHS
Not for Resale

Table E.10 - Time-domain sequence for Symbol #32

| # | Real | Imag | # | Real | Imag | # | Real | Imag |
|---|---|---|---|---|---|---|---|---|
| 5 116 | 24,041 6 | 0 | 5 171 | -4,945 8 | 0 | 5 226 | -5,146 5 | 0 |
| 5 117 | -17,093 4 | 0 | 5 172 | 1,372 1 | 0 | 5 227 | -4,055 9 | 0 |
| 5 118 | 10,188 5 | 0 | 5 173 | 0,313 6 | 0 | 5 228 | -2,000 0 | 0 |
| 5 119 | 3,791 7 | 0 | 5 174 | -0,829 3 | 0 | 5 229 | 10,875 7 | 0 |
| 5 120 | -6,111 3 | 0 | 5 175 | 21,867 7 | 0 | 5 230 | -26,801 5 | 0 |
| 5 121 | -3,168 5 | 0 | 5 176 | -23,862 6 | 0 | 5 231 | -11,900 7 | 0 |
| 5 122 | 4,379 5 | 0 | 5 177 | -19,146 9 | 0 | 5 232 | 5,922 4 | 0 |
| 5 123 | 18,124 9 | 0 | 5 178 | 9,953 2 | 0 | 5 233 | -4,835 9 | 0 |
| 5 124 | -0,865 9 | 0 | 5 179 | -11,044 2 | 0 | 5 234 | -22,865 1 | 0 |
| 5 125 | -17,061 0 | 0 | 5 180 | 4,242 6 | 0 | 5 235 | 5,862 9 | 0 |
| 5 126 | -5,475 3 | 0 | 5 181 | 28,150 2 | 0 | 5 236 | 3,799 5 | 0 |
| 5 127 | -6,869 4 | 0 | 5 182 | 10,986 2 | 0 | 5 237 | 0,738 1 | 0 |
| 5 128 | -8,705 9 | 0 | 5 183 | 0,525 7 | 0 | 5 238 | -8,617 4 | 0 |
| 5 129 | -5,613 9 | 0 | 5 184 | 9,962 5 | 0 | 5 239 | 4,699 7 | 0 |
| 5 130 | -16,472 4 | 0 | 5 185 | 1,596 8 | 0 | 5 240 | 11,580 8 | 0 |
| 5 131 | 11,353 8 | 0 | 5 186 | -4,790 4 | 0 | 5 241 | 20,124 2 | 0 |
| 5 132 | -5,171 6 | 0 | 5 187 | -6,034 4 | 0 | 5 242 | 13,119 4 | 0 |
| 5 133 | -0,828 1 | 0 | 5 188 | 0,664 9 | 0 | 5 243 | -10,039 4 | 0 |
| 5 134 | 13,324 3 | 0 | 5 189 | 16,643 2 | 0 | 5 244 | 0 | 0 |
| 5 135 | -12,766 5 | 0 | 5 190 | -6,445 8 | 0 | 5 245 | 0 | 0 |
| 5 136 | 8,500 5 | 0 | 5 191 | -7,996 1 | 0 | 5 246 | 0 | 0 |
| 5 137 | -0,235 5 | 0 | 5 192 | -8,193 3 | 0 | 5 247 | 0 | 0 |
| 5 138 | -14,946 6 | 0 | 5 193 | 2,774 2 | 0 | 5 248 | 0 | 0 |
| 5 139 | -1,926 2 | 0 | 5 194 | 9,291 1 | 0 | 5 249 | 0 | 0 |
| 5 140 | 2,742 2 | 0 | 5 195 | 4,107 4 | 0 | 5 250 | 0 | 0 |
| 5 141 | -12,660 4 | 0 | 5 196 | 10,828 4 | 0 | 5 251 | 0 | 0 |
| 5 142 | -21,444 5 | 0 | 5 197 | -17,594 5 | 0 | 5 252 | 0 | 0 |
| 5 143 | -14,554 8 | 0 | 5 198 | 0,206 3 | 0 | 5 253 | 0 | 0 |
| 5 144 | -23,842 5 | 0 | 5 199 | -3,034 4 | 0 | 5 254 | 0 | 0 |
| 5 145 | 7,132 0 | 0 | 5 200 | -4,936 9 | 0 | 5 255 | 0 | 0 |
| 5 146 | -3,192 8 | 0 | 5 201 | 23,943 5 | 0 | 5 256 | 0 | 0 |
| 5 147 | 11,724 0 | 0 | 5 202 | -1,595 8 | 0 | 5 257 | 0 | 0 |
| 5 148 | -9,899 5 | 0 | 5 203 | 4,266 5 | 0 | 5 258 | 0 | 0 |
| 5 149 | -12,001 2 | 0 | 5 204 | -13,570 6 | 0 | 5 259 | 0 | 0 |
| 5 150 | 5,672 2 | 0 | 5 205 | -8,634 2 | 0 | 5 260 | 0 | 0 |
| 5 151 | -0,851 2 | 0 | 5 206 | -7,341 1 | 0 | 5 261 | 0 | 0 |
| 5 152 | 4,405 7 | 0 | 5 207 | -10,494 7 | 0 | 5 262 | 0 | 0 |
| 5 153 | 4,256 3 | 0 | 5 208 | -0,160 0 | 0 | 5 263 | 0 | 0 |
| 5 154 | -12,590 5 | 0 | 5 209 | 5,029 7 | 0 | 5 264 | 0 | 0 |



Copyright International Organization for Standardization
Provided by IHS under license with ISO
No reproduction or networking permitted without license from IHS
Not for Resale

Table E.10 - Time-domain sequence for Symbol #32 (concluded)

| | | | | | | | | |
|---|---|---|---|---|---|---|---|---|
| 5 155 | -15,079 9 | 0 | 5 210 | 21,820 9 | 0 | 5 265 | 0 | 0 |
| 5 156 | 21,747 3 | 0 | 5 211 | 7,106 5 | 0 | 5 266 | 0 | 0 |
| 5 157 | 6,828 7 | 0 | 5 212 | 9,899 5 | 0 | 5 267 | 0 | 0 |
| 5 158 | 10,080 5 | 0 | 5 213 | -9,373 6 | 0 | 5 268 | 0 | 0 |
| 5 159 | -7,184 9 | 0 | 5 214 | 2,607 9 | 0 | 5 269 | 0 | 0 |
| 5 160 | -0,404 1 | 0 | 5 215 | 5,587 6 | 0 | 5 270 | 0 | 0 |
| 5 161 | 6,577 3 | 0 | 5 216 | 0,713 6 | 0 | 5 271 | 0 | 0 |
| 5 162 | -8,686 5 | 0 | 5 217 | -8,616 8 | 0 | 5 272 | 0 | 0 |
| 5 163 | -4,465 9 | 0 | 5 218 | 4,333 3 | 0 | 5 273 | 0 | 0 |
| 5 164 | 2,000 0 | 0 | 5 219 | 4,418 3 | 0 | 5 274 | 0 | 0 |
| 5 165 | 13,178 6 | 0 | 5 220 | 18,051 7 | 0 | 5 275 | 0 | 0 |
| 5 166 | 4,502 4 | 0 | 5 221 | 9,145 7 | 0 | 5 276 | 0 | 0 |
| 5 167 | -8,665 9 | 0 | 5 222 | -3,240 9 | 0 | 5 277 | 0 | 0 |
| 5 168 | 15,484 6 | 0 | 5 223 | -6,781 2 | 0 | 5 278 | 0 | 0 |
| 5 169 | 14,373 8 | 0 | 5 224 | -2,981 0 | 0 | 5 279 | 0 | 0 |
| 5 170 | 4,761 9 | 0 | 5 225 | 10,437 2 | 0 | 5 280 | 0 | 0 |

DRAFT ECMA



Copyright International Organization for Standardization
Provided by IHS under license with ISO
No reproduction or networking permitted without license from IHS
Not for Resale

Table E.11 - Time-domain sequence for Symbol #33

| # | Real | Imag | # | Real | Imag | # | Real | Imag |
|---|---|---|---|---|---|---|---|---|
| 5 281 | 4,242 6 | 0 | 5 336 | 18,538 8 | 0 | 5 391 | 5,960 4 | 0 |
| 5 282 | -13,153 7 | 0 | 5 337 | 1,982 0 | 0 | 5 392 | -7,186 9 | 0 |
| 5 283 | -17,180 2 | 0 | 5 338 | 3,489 2 | 0 | 5 393 | 4,000 0 | 0 |
| 5 284 | -10,909 2 | 0 | 5 339 | 22,160 0 | 0 | 5 394 | -6,247 9 | 0 |
| 5 285 | -0,136 6 | 0 | 5 340 | 9,917 9 | 0 | 5 395 | -6,493 6 | 0 |
| 5 286 | -2,759 0 | 0 | 5 341 | 18,886 5 | 0 | 5 396 | 5,762 5 | 0 |
| 5 287 | -0,554 0 | 0 | 5 342 | 32,017 0 | 0 | 5 397 | 2,823 9 | 0 |
| 5 288 | 11,196 9 | 0 | 5 343 | -5,268 3 | 0 | 5 398 | -12,927 6 | 0 |
| 5 289 | -5,262 0 | 0 | 5 344 | -3,507 8 | 0 | 5 399 | -2,592 2 | 0 |
| 5 290 | -15,181 7 | 0 | 5 345 | -9,899 5 | 0 | 5 400 | -1,383 5 | 0 |
| 5 291 | -3,261 5 | 0 | 5 346 | -3,544 4 | 0 | 5 401 | -16,124 2 | 0 |
| 5 292 | 14,676 5 | 0 | 5 347 | 14,876 3 | 0 | 5 402 | -16,635 3 | 0 |
| 5 293 | 12,501 6 | 0 | 5 348 | 0,405 4 | 0 | 5 403 | 3,083 5 | 0 |
| 5 294 | 1,357 5 | 0 | 5 349 | 6,660 6 | 0 | 5 404 | 20,504 1 | 0 |
| 5 295 | -4,818 0 | 0 | 5 350 | -9,721 3 | 0 | 5 405 | 3,925 1 | 0 |
| 5 296 | -4,870 1 | 0 | 5 351 | 4,619 9 | 0 | 5 406 | 3,525 9 | 0 |
| 5 297 | -0,142 1 | 0 | 5 352 | 27,441 9 | 0 | 5 407 | 22,777 9 | 0 |
| 5 298 | -7,981 5 | 0 | 5 353 | -1,566 5 | 0 | 5 408 | 2,100 0 | 0 |
| 5 299 | 0,534 1 | 0 | 5 354 | -7,072 2 | 0 | 5 409 | 0 | 0 |
| 5 300 | -3,771 7 | 0 | 5 355 | -12,816 2 | 0 | 5 410 | 0 | 0 |
| 5 301 | 17,360 7 | 0 | 5 356 | -19,555 0 | 0 | 5 411 | 0 | 0 |
| 5 302 | 12,664 4 | 0 | 5 357 | -9,648 1 | 0 | 5 412 | 0 | 0 |
| 5 303 | -15,240 6 | 0 | 5 358 | -6,791 7 | 0 | 5 413 | 0 | 0 |
| 5 304 | -2,965 5 | 0 | 5 359 | -2,163 2 | 0 | 5 414 | 0 | 0 |
| 5 305 | -18,474 6 | 0 | 5 360 | 3,540 9 | 0 | 5 415 | 0 | 0 |
| 5 306 | 6,036 0 | 0 | 5 361 | -28,142 1 | 0 | 5 416 | 0 | 0 |
| 5 307 | 7,115 0 | 0 | 5 362 | 18,397 5 | 0 | 5 417 | 0 | 0 |
| 5 308 | 0,931 9 | 0 | 5 363 | 0,684 0 | 0 | 5 418 | 0 | 0 |
| 5 309 | -0,973 4 | 0 | 5 364 | -16,201 5 | 0 | 5 419 | 0 | 0 |
| 5 310 | -2,415 4 | 0 | 5 365 | -13,001 5 | 0 | 5 420 | 0 | 0 |
| 5 311 | -1,135 5 | 0 | 5 366 | 11,111 9 | 0 | 5 421 | 0 | 0 |
| 5 312 | 0,405 7 | 0 | 5 367 | 11,847 8 | 0 | 5 422 | 0 | 0 |
| 5 313 | -4,242 6 | 0 | 5 368 | -8,790 4 | 0 | 5 423 | 0 | 0 |
| 5 314 | -3,306 4 | 0 | 5 369 | 4,332 5 | 0 | 5 424 | 0 | 0 |
| 5 315 | 13,880 5 | 0 | 5 370 | -4,857 4 | 0 | 5 425 | 0 | 0 |
| 5 316 | -4,796 1 | 0 | 5 371 | 23,767 5 | 0 | 5 426 | 0 | 0 |
| 5 317 | -8,511 5 | 0 | 5 372 | -11,332 7 | 0 | 5 427 | 0 | 0 |
| 5 318 | 7,299 5 | 0 | 5 373 | -0,181 5 | 0 | 5 428 | 0 | 0 |
| 5 319 | 13,512 4 | 0 | 5 374 | -13,402 5 | 0 | 5 429 | 0 | 0 |



Copyright International Organization for Standardization
Provided by IHS under license with ISO
No reproduction or networking permitted without license from IHS
Not for Resale

Table E.11 - Time-domain sequence for Symbol #33 (concluded)

| | | | | | | | | |
|---|---|---|---|---|---|---|---|---|
| 5320 | -1,774 1 | 0 | 5 375 | -10,717 2 | 0 | 5 430 | 0 | 0 |
| 5 321 | -0,179 6 | 0 | 5 376 | 6,491 4 | 0 | 5 431 | 0 | 0 |
| 5 322 | 6,215 4 | 0 | 5 377 | 4,242 6 | 0 | 5 432 | 0 | 0 |
| 5 323 | -16,889 9 | 0 | 5 378 | -2,145 1 | 0 | 5 433 | 0 | 0 |
| 5 324 | 11,916 2 | 0 | 5 379 | -2,332 9 | 0 | 5 434 | 0 | 0 |
| 5 325 | 1,722 1 | 0 | 5 380 | -21,418 1 | 0 | 5 435 | 0 | 0 |
| 5 326 | -14,080 9 | 0 | 5 381 | 7,644 4 | 0 | 5 436 | 0 | 0 |
| 5 327 | 6,677 7 | 0 | 5 382 | -4,090 2 | 0 | 5 437 | 0 | 0 |
| 5 328 | 5,848 8 | 0 | 5 383 | -11,921 4 | 0 | 5 438 | 0 | 0 |
| 5 329 | -4,000 0 | 0 | 5 384 | 9,541 3 | 0 | 5 439 | 0 | 0 |
| 5 330 | -9,332 1 | 0 | 5 385 | 1,351 2 | 0 | 5 440 | 0 | 0 |
| 5 331 | 7,345 6 | 0 | 5 386 | 0,692 3 | 0 | 5 441 | 0 | 0 |
| 5 332 | -12,885 9 | 0 | 5 387 | -11,844 8 | 0 | 5 442 | 0 | 0 |
| 5 333 | -1,526 2 | 0 | 5 388 | 27,383 1 | 0 | 5 443 | 0 | 0 |
| 5 334 | 3,108 7 | 0 | 5 389 | -14,918 8 | 0 | 5 444 | 0 | 0 |
| 5 335 | 11,641 9 | 0 | 5 390 | 4,476 4 | 0 | 5 445 | 0 | 0 |

DRAFT ECMA



Copyright International Organization for Standardization
Provided by IHS under license with ISO
No reproduction or networking permitted without license from IHS
Not for Resale

Table E.12 - Time-domain sequence for Symbol #34

| # | Real | Imag | # | Real | Imag | # | Real | Imag |
|---|---|---|---|---|---|---|---|---|
| 5 446 | 4,242 6 | 0 | 5 501 | 18,538 8 | 0 | 5 556 | 5,960 4 | 0 |
| 5 447 | -13,153 7 | 0 | 5 502 | 1,982 0 | 0 | 5 557 | -7,186 9 | 0 |
| 5 448 | -17,180 2 | 0 | 5 503 | 3,489 2 | 0 | 5 558 | 4,000 0 | 0 |
| 5 449 | -10,909 2 | 0 | 5 504 | 22,160 0 | 0 | 5 559 | -6,247 9 | 0 |
| 5 450 | -0,136 6 | 0 | 5 505 | 9,917 9 | 0 | 5 560 | -6,493 6 | 0 |
| 5 451 | -2,759 0 | 0 | 5 506 | 18,886 5 | 0 | 5 561 | 5,762 5 | 0 |
| 5 452 | -0,554 0 | 0 | 5 507 | 32,017 0 | 0 | 5 562 | 2,823 9 | 0 |
| 5 453 | 11,196 9 | 0 | 5 508 | -5,268 3 | 0 | 5 563 | -12,927 6 | 0 |
| 5 454 | -5,262 0 | 0 | 5 509 | -3,507 8 | 0 | 5 564 | -2,592 2 | 0 |
| 5 455 | -15,181 7 | 0 | 5 510 | -9,899 5 | 0 | 5 565 | -1,383 5 | 0 |
| 5 456 | -3,261 5 | 0 | 5 511 | -3,544 4 | 0 | 5 566 | -16,124 2 | 0 |
| 5 457 | 14,676 5 | 0 | 5 512 | 14,876 3 | 0 | 5 567 | -16,635 3 | 0 |
| 5 458 | 12,501 6 | 0 | 5 513 | 0,405 4 | 0 | 5 568 | 3,083 5 | 0 |
| 5 459 | 1,357 5 | 0 | 5 514 | 6,660 6 | 0 | 5 569 | 20,504 1 | 0 |
| 5 460 | -4,818 0 | 0 | 5 515 | -9,721 3 | 0 | 5 570 | 3,925 1 | 0 |
| 5 461 | -4,870 1 | 0 | 5 516 | 4,619 9 | 0 | 5 571 | 3,525 9 | 0 |
| 5 462 | -0,142 1 | 0 | 5 517 | 27,441 9 | 0 | 5 572 | 22,777 9 | 0 |
| 5 463 | -7,981 5 | 0 | 5 518 | -1,566 5 | 0 | 5 573 | 2,100 0 | 0 |
| 5 464 | 0,534 1 | 0 | 5 519 | -7,072 2 | 0 | 5 574 | 0 | 0 |
| 5 465 | -3,771 7 | 0 | 5 520 | -12,816 2 | 0 | 5 575 | 0 | 0 |
| 5 466 | 17,360 7 | 0 | 5 521 | -19,555 0 | 0 | 5 576 | 0 | 0 |
| 5 467 | 12,664 4 | 0 | 5 522 | -9,648 1 | 0 | 5 577 | 0 | 0 |
| 5 468 | -15,240 6 | 0 | 5 523 | -6,791 7 | 0 | 5 578 | 0 | 0 |
| 5 469 | -2,965 5 | 0 | 5 524 | -2,163 2 | 0 | 5 579 | 0 | 0 |
| 5 470 | -18,474 6 | 0 | 5 525 | 3,540 9 | 0 | 5 580 | 0 | 0 |
| 5 471 | 6,036 0 | 0 | 5 526 | -28,142 1 | 0 | 5 581 | 0 | 0 |
| 5 472 | 7,115 0 | 0 | 5 527 | 18,397 5 | 0 | 5 582 | 0 | 0 |
| 5 473 | 0,931 9 | 0 | 5 528 | 0,684 0 | 0 | 5 583 | 0 | 0 |
| 5 474 | -0,973 4 | 0 | 5 529 | -16,201 5 | 0 | 5 584 | 0 | 0 |
| 5 475 | -2,415 4 | 0 | 5 530 | -13,001 5 | 0 | 5 585 | 0 | 0 |
| 5 476 | -1,135 5 | 0 | 5 531 | 11,111 9 | 0 | 5 586 | 0 | 0 |
| 5 477 | 0,405 7 | 0 | 5 532 | 11,847 8 | 0 | 5 587 | 0 | 0 |
| 5 478 | -4,242 6 | 0 | 5 533 | -8,790 4 | 0 | 5 588 | 0 | 0 |
| 5 479 | -3,306 4 | 0 | 5 534 | 4,332 5 | 0 | 5 589 | 0 | 0 |
| 5 480 | 13,880 5 | 0 | 5 535 | -4,857 4 | 0 | 5 590 | 0 | 0 |
| 5 481 | -4,796 1 | 0 | 5 536 | 23,767 5 | 0 | 5 591 | 0 | 0 |
| 5 482 | -8,511 5 | 0 | 5 537 | -11,332 7 | 0 | 5 592 | 0 | 0 |
| 5 483 | 7,299 5 | 0 | 5 538 | -0,181 5 | 0 | 5 593 | 0 | 0 |
| 5 484 | 13,512 4 | 0 | 5 539 | -13,402 5 | 0 | 5 594 | 0 | 0 |



Copyright International Organization for Standardization
Provided by IHS under license with ISO
No reproduction or networking permitted without license from IHS
Not for Resale

Table E.12 - Time-domain sequence for Symbol #34 (concluded)

| | | | | | | | | |
|---|---|---|---|---|---|---|---|---|
| 5 485 | -1,774 1 | 0 | 5 540 | -10,717 2 | 0 | 5 595 | 0 | 0 |
| 5 486 | -0,179 6 | 0 | 5 541 | 6,491 4 | 0 | 5 596 | 0 | 0 |
| 5 487 | 6,215 4 | 0 | 5 542 | 4,242 6 | 0 | 5 597 | 0 | 0 |
| 5 488 | -16,889 9 | 0 | 5 543 | -2,145 1 | 0 | 5 598 | 0 | 0 |
| 5 489 | 11,916 2 | 0 | 5 544 | -2,332 9 | 0 | 5 599 | 0 | 0 |
| 5 490 | 1,722 1 | 0 | 5 545 | -21,418 1 | 0 | 5 600 | 0 | 0 |
| 5 491 | -14,080 9 | 0 | 5 546 | 7,644 4 | 0 | 5 601 | 0 | 0 |
| 5 492 | 6,677 7 | 0 | 5 547 | -4,090 2 | 0 | 5 602 | 0 | 0 |
| 5 493 | 5,848 8 | 0 | 5 548 | -11,921 4 | 0 | 5 603 | 0 | 0 |
| 5 494 | -4,000 0 | 0 | 5 549 | 9,541 3 | 0 | 5 604 | 0 | 0 |
| 5 495 | -9,332 1 | 0 | 5 550 | 1,351 2 | 0 | 5 605 | 0 | 0 |
| 5 496 | 7,345 6 | 0 | 5 551 | 0,692 3 | 0 | 5 606 | 0 | 0 |
| 5 497 | -12,885 9 | 0 | 5 552 | -11,844 8 | 0 | 5 607 | 0 | 0 |
| 5 498 | -1,526 2 | 0 | 5 553 | 27,383 1 | 0 | 5 608 | 0 | 0 |
| 5 499 | 3,108 7 | 0 | 5 554 | -14,918 8 | 0 | 5 609 | 0 | 0 |
| 5 500 | 11,641 9 | 0 | 5 555 | 4,476 4 | 0 | 5 610 | 0 | 0 |

DRAFT



Copyright International Organization for Standardization
Provided by IHS under license with ISO
No reproduction or networking permitted without license from IHS
Not for Resale

Table E.13 - Time-domain sequence for Symbol #35

| # | Real | Imag | # | Real | Imag | # | Real | Imag |
|---|---|---|---|---|---|---|---|---|
| 5 611 | -24,041 6 | 0 | 5 666 | -2,905 0 | 0 | 5 721 | -17,716 7 | 0 |
| 5 612 | 1,228 5 | 0 | 5 667 | 22,453 7 | 0 | 5 722 | 12,159 0 | 0 |
| 5 613 | 6,228 1 | 0 | 5 668 | -1,779 1 | 0 | 5 723 | 6,828 4 | 0 |
| 5 614 | -2,440 5 | 0 | 5 669 | 1,393 2 | 0 | 5 724 | -8,110 8 | 0 |
| 5 615 | -16,692 2 | 0 | 5 670 | 5,204 1 | 0 | 5 725 | 7,932 9 | 0 |
| 5 616 | 12,587 6 | 0 | 5 671 | 4,591 9 | 0 | 5 726 | 7,108 7 | 0 |
| 5 617 | -2,784 8 | 0 | 5 672 | 7,875 0 | 0 | 5 727 | 9,181 0 | 0 |
| 5 618 | 20,561 9 | 0 | 5 673 | 14,463 7 | 0 | 5 728 | 2,526 2 | 0 |
| 5 619 | -6,776 7 | 0 | 5 674 | 3,692 8 | 0 | 5 729 | 0,147 7 | 0 |
| 5 620 | -5,367 2 | 0 | 5 675 | -15,556 3 | 0 | 5 730 | -0,462 9 | 0 |
| 5 621 | 1,393 1 | 0 | 5 676 | -18,453 5 | 0 | 5 731 | -4,311 6 | 0 |
| 5 622 | -8,722 2 | 0 | 5 677 | -17,890 8 | 0 | 5 732 | -3,914 4 | 0 |
| 5 623 | 5,541 2 | 0 | 5 678 | -4,724 7 | 0 | 5 733 | 5,042 7 | 0 |
| 5 624 | 8,274 2 | 0 | 5 679 | 2,676 1 | 0 | 5 734 | -14,041 5 | 0 |
| 5 625 | -11,132 6 | 0 | 5 680 | 5,205 0 | 0 | 5 735 | 5,323 1 | 0 |
| 5 626 | 13,655 3 | 0 | 5 681 | -16,375 1 | 0 | 5 736 | -10,845 6 | 0 |
| 5 627 | 14,970 6 | 0 | 5 682 | -20,123 9 | 0 | 5 737 | 21,948 3 | 0 |
| 5 628 | -7,353 9 | 0 | 5 683 | -3,081 2 | 0 | 5 738 | 14,281 3 | 0 |
| 5 629 | 4,312 9 | 0 | 5 684 | -22,418 2 | 0 | 5 739 | 0 | 0 |
| 5 630 | 3,561 5 | 0 | 5 685 | -12,550 4 | 0 | 5 740 | 0 | 0 |
| 5 631 | 12,579 0 | 0 | 5 686 | -12,916 3 | 0 | 5 741 | 0 | 0 |
| 5 632 | -5,137 7 | 0 | 5 687 | -3,305 0 | 0 | 5 742 | 0 | 0 |
| 5 633 | -0,951 6 | 0 | 5 688 | -4,287 9 | 0 | 5 743 | 0 | 0 |
| 5 634 | -11,666 6 | 0 | 5 689 | -16,996 8 | 0 | 5 744 | 0 | 0 |
| 5 635 | 4,120 0 | 0 | 5 690 | 0,918 9 | 0 | 5 745 | 0 | 0 |
| 5 636 | -6,594 1 | 0 | 5 691 | 18,970 6 | 0 | 5 746 | 0 | 0 |
| 5 637 | -1,081 1 | 0 | 5 692 | 19,664 7 | 0 | 5 747 | 0 | 0 |
| 5 638 | -4,568 0 | 0 | 5 693 | 9,996 3 | 0 | 5 748 | 0 | 0 |
| 5 639 | -4,964 3 | 0 | 5 694 | -8,369 3 | 0 | 5 749 | 0 | 0 |
| 5 640 | 12,156 9 | 0 | 5 695 | -13,368 8 | 0 | 5 750 | 0 | 0 |
| 5 641 | 19,514 6 | 0 | 5 696 | -4,593 3 | 0 | 5 751 | 0 | 0 |
| 5 642 | -0,942 9 | 0 | 5 697 | 15,297 3 | 0 | 5 752 | 0 | 0 |
| 5 643 | 1,414 2 | 0 | 5 698 | -9,813 0 | 0 | 5 753 | 0 | 0 |
| 5 644 | -7,056 7 | 0 | 5 699 | 6,022 1 | 0 | 5 754 | 0 | 0 |
| 5 645 | -8,059 3 | 0 | 5 700 | 16,230 0 | 0 | 5 755 | 0 | 0 |
| 5 646 | 5,036 2 | 0 | 5 701 | -9,218 3 | 0 | 5 756 | 0 | 0 |
| 5 647 | -4,148 2 | 0 | 5 702 | 2,185 8 | 0 | 5 757 | 0 | 0 |
| 5 648 | 16,504 3 | 0 | 5 703 | -7,293 8 | 0 | 5 758 | 0 | 0 |
| 5 649 | -20,034 7 | 0 | 5 704 | 6,677 7 | 0 | 5 759 | 0 | 0 |



Copyright International Organization for Standardization
Provided by IHS under license with ISO
No reproduction or networking permitted without license from IHS
Not for Resale

Table E.13 - Time-domain sequence for Symbol #35 (concluded)

| | | | | | | | | |
|---|---|---|---|---|---|---|---|---|
| 5 650 | -9,187 6 | 0 | 5 705 | -11,689 8 | 0 | 5 760 | 0 | 0 |
| 5 651 | 18,305 7 | 0 | 5 706 | -3,190 0 | 0 | 5 761 | 0 | 0 |
| 5 652 | 22,876 2 | 0 | 5 707 | 9,899 5 | 0 | 5 762 | 0 | 0 |
| 5 653 | -8,894 1 | 0 | 5 708 | 12,531 5 | 0 | 5 763 | 0 | 0 |
| 5 654 | -2,753 2 | 0 | 5 709 | -11,169 5 | 0 | 5 764 | 0 | 0 |
| 5 655 | 18,475 3 | 0 | 5 710 | -0,661 5 | 0 | 5 765 | 0 | 0 |
| 5 656 | 2,080 6 | 0 | 5 711 | -6,806 3 | 0 | 5 766 | 0 | 0 |
| 5 657 | 22,295 5 | 0 | 5 712 | -9,543 8 | 0 | 5 767 | 0 | 0 |
| 5 658 | 5,922 1 | 0 | 5 713 | -5,160 7 | 0 | 5 768 | 0 | 0 |
| 5 659 | -1,171 6 | 0 | 5 714 | -3,526 7 | 0 | 5 769 | 0 | 0 |
| 5 660 | 2,863 9 | 0 | 5 715 | 19,836 4 | 0 | 5 770 | 0 | 0 |
| 5 661 | -2,664 4 | 0 | 5 716 | -3,719 4 | 0 | 5 771 | 0 | 0 |
| 5 662 | -9,505 8 | 0 | 5 717 | 12,601 1 | 0 | 5 772 | 0 | 0 |
| 5 663 | -17,361 8 | 0 | 5 718 | -9,020 6 | 0 | 5 773 | 0 | 0 |
| 5 664 | 9,765 3 | 0 | 5 719 | -7,054 7 | 0 | 5 774 | 0 | 0 |
| 5 665 | -13,451 9 | 0 | 5 720 | 5,382 8 | 0 | 5 775 | 0 | 0 |

DRAFT ECMA



Copyright International Organization for Standardization
Provided by IHS under license with ISO
No reproduction or networking permitted without license from IHS
Not for Resale

Table E.14 - Time-domain sequence for Symbol #36

| # | Real | Imag | # | Real | Imag | # | Real | Imag |
|---|---|---|---|---|---|---|---|---|
| 5 776 | 24,041 6 | 0 | 5 831 | 2,905 0 | 0 | 5 886 | 17,716 7 | 0 |
| 5 777 | -1,228 5 | 0 | 5 832 | -22,453 7 | 0 | 5 887 | -12,159 0 | 0 |
| 5 778 | -6,228 1 | 0 | 5 833 | 1,779 1 | 0 | 5 888 | -6,828 4 | 0 |
| 5 779 | 2,440 5 | 0 | 5 834 | -1,393 2 | 0 | 5 889 | 8,110 8 | 0 |
| 5 780 | 16,692 2 | 0 | 5 835 | -5,204 1 | 0 | 5 890 | -7,932 9 | 0 |
| 5 781 | -12,587 6 | 0 | 5 836 | -4,591 9 | 0 | 5 891 | -7,108 7 | 0 |
| 5 782 | 2,784 8 | 0 | 5 837 | -7,875 0 | 0 | 5 892 | -9,181 0 | 0 |
| 5 783 | -20,561 9 | 0 | 5 838 | -14,463 7 | 0 | 5 893 | -2,526 2 | 0 |
| 5 784 | 6,776 7 | 0 | 5 839 | -3,692 8 | 0 | 5 894 | -0,147 7 | 0 |
| 5 785 | 5,367 2 | 0 | 5 840 | 15,556 3 | 0 | 5 895 | 0,462 9 | 0 |
| 5 786 | -1,393 1 | 0 | 5 841 | 18,453 5 | 0 | 5 896 | 4,311 6 | 0 |
| 5 787 | 8,722 2 | 0 | 5 842 | 17,890 8 | 0 | 5 897 | 3,914 4 | 0 |
| 5 788 | -5,541 2 | 0 | 5 843 | 4,724 7 | 0 | 5 898 | -5,042 7 | 0 |
| 5 789 | -8,274 2 | 0 | 5 844 | -2,676 1 | 0 | 5 899 | 14,041 5 | 0 |
| 5 790 | 11,132 6 | 0 | 5 845 | -5,205 0 | 0 | 5 900 | -5,323 1 | 0 |
| 5 791 | -13,655 3 | 0 | 5 846 | 16,375 1 | 0 | 5 901 | 10,845 6 | 0 |
| 5 792 | -14,970 6 | 0 | 5 847 | 20,123 9 | 0 | 5 902 | -21,948 3 | 0 |
| 5 793 | 7,353 9 | 0 | 5 848 | 3,081 2 | 0 | 5 903 | -14,281 3 | 0 |
| 5 794 | -4,312 9 | 0 | 5 849 | 22,418 2 | 0 | 5 904 | 0 | 0 |
| 5 795 | -3,561 5 | 0 | 5 850 | 12,550 4 | 0 | 5 905 | 0 | 0 |
| 5 796 | -12,579 0 | 0 | 5 851 | 12,916 3 | 0 | 5 906 | 0 | 0 |
| 5 797 | 5,137 7 | 0 | 5 852 | 3,305 0 | 0 | 5 907 | 0 | 0 |
| 5 798 | 0,951 6 | 0 | 5 853 | 4,287 9 | 0 | 5 908 | 0 | 0 |
| 5 799 | 11,666 6 | 0 | 5 854 | 16,996 8 | 0 | 5 909 | 0 | 0 |
| 5 800 | -4,120 0 | 0 | 5 855 | -0,918 9 | 0 | 5 910 | 0 | 0 |
| 5 801 | 6,594 1 | 0 | 5 856 | -18,970 6 | 0 | 5 911 | 0 | 0 |
| 5 802 | 1,081 1 | 0 | 5 857 | -19,664 7 | 0 | 5 912 | 0 | 0 |
| 5 803 | 4,568 0 | 0 | 5 858 | -9,996 3 | 0 | 5 913 | 0 | 0 |
| 5 804 | 4,964 3 | 0 | 5 859 | 8,369 3 | 0 | 5 914 | 0 | 0 |
| 5 805 | -12,156 9 | 0 | 5 860 | 13,368 8 | 0 | 5 915 | 0 | 0 |
| 5 806 | -19,514 6 | 0 | 5 861 | 4,593 3 | 0 | 5 916 | 0 | 0 |
| 5 807 | 0,942 9 | 0 | 5 862 | -15,297 3 | 0 | 5 917 | 0 | 0 |
| 5 808 | -1,414 2 | 0 | 5 863 | 9,813 0 | 0 | 5 918 | 0 | 0 |
| 5 809 | 7,056 7 | 0 | 5 864 | -6,022 1 | 0 | 5 919 | 0 | 0 |
| 5 810 | 8,059 3 | 0 | 5 865 | -16,230 0 | 0 | 5 920 | 0 | 0 |
| 5 811 | -5,036 2 | 0 | 5 866 | 9,218 3 | 0 | 5 921 | 0 | 0 |
| 5 812 | 4,148 2 | 0 | 5 867 | -2,185 8 | 0 | 5 922 | 0 | 0 |
| 5 813 | -16,504 3 | 0 | 5 868 | 7,293 8 | 0 | 5 923 | 0 | 0 |
| 5 814 | 20,034 7 | 0 | 5 869 | -6,677 7 | 0 | 5 924 | 0 | 0 |



Copyright International Organization for Standardization
Provided by IHS under license with ISO
No reproduction or networking permitted without license from IHS
Not for Resale

Table E.14 - Time-domain sequence for Symbol #36 (concluded)

| | | | | | | | | |
|---|---|---|---|---|---|---|---|---|
| 5 815 | 9,187 6 | 0 | 5 870 | 11,689 8 | 0 | 5 925 | 0 | 0 |
| 5 816 | -18,305 7 | 0 | 5 871 | 3,190 0 | 0 | 5 926 | 0 | 0 |
| 5 817 | -22,876 2 | 0 | 5 872 | -9,899 5 | 0 | 5 927 | 0 | 0 |
| 5 818 | 8,894 1 | 0 | 5 873 | -12,531 5 | 0 | 5 928 | 0 | 0 |
| 5 819 | 2,753 2 | 0 | 5 874 | 11,169 5 | 0 | 5 929 | 0 | 0 |
| 5 820 | -18,475 3 | 0 | 5 875 | 0,661 5 | 0 | 5 930 | 0 | 0 |
| 5 821 | -2,080 6 | 0 | 5 876 | 6,806 3 | 0 | 5 931 | 0 | 0 |
| 5 822 | -22,295 5 | 0 | 5 877 | 9,543 8 | 0 | 5 932 | 0 | 0 |
| 5 823 | -5,922 1 | 0 | 5 878 | 5,160 7 | 0 | 5 933 | 0 | 0 |
| 5 824 | 1,171 6 | 0 | 5 879 | 3,526 7 | 0 | 5 934 | 0 | 0 |
| 5 825 | -2,863 9 | 0 | 5 880 | -19,836 4 | 0 | 5 935 | 0 | 0 |
| 5 826 | 2,664 4 | 0 | 5 881 | 3,719 4 | 0 | 5 936 | 0 | 0 |
| 5 827 | 9,505 8 | 0 | 5 882 | -12,601 1 | 0 | 5 937 | 0 | 0 |
| 5 828 | 17,361 8 | 0 | 5 883 | 9,020 6 | 0 | 5 938 | 0 | 0 |
| 5 829 | -9,765 3 | 0 | 5 884 | 7,054 7 | 0 | 5 939 | 0 | 0 |
| 5 830 | 13,451 9 | 0 | 5 885 | -5,382 8 | 0 | 5 940 | 0 | 0 |

DRAFT



Copyright International Organization for Standardization
Provided by IHS under license with ISO
No reproduction or networking permitted without license from IHS
Not for Resale

Table E.15 - Time-domain sequence for Symbol #37

| # | Real | Imag | # | Real | Imag | # | Real | Imag |
|---|---|---|---|---|---|---|---|---|
| 5 941 | 4,242 6 | 0 | 5 996 | -4,308 9 | 0 | 6 051 | -13,579 6 | 0 |
| 5 942 | -1,846 8 | 0 | 5 997 | 10,856 5 | 0 | 6 052 | 19,335 3 | 0 |
| 5 943 | -15,106 1 | 0 | 5 998 | -11,090 5 | 0 | 6 053 | -8,828 4 | 0 |
| 5 944 | 2,741 3 | 0 | 5 999 | -14,078 8 | 0 | 6 054 | -10,115 3 | 0 |
| 5 945 | 12,470 4 | 0 | 6 000 | 20,292 9 | 0 | 6 055 | -16,265 9 | 0 |
| 5 946 | 10,358 6 | 0 | 6 001 | 11,948 1 | 0 | 6 056 | 0,832 9 | 0 |
| 5 947 | 20,588 8 | 0 | 6 002 | 4,304 8 | 0 | 6 057 | 5,777 4 | 0 |
| 5 948 | 10,983 0 | 0 | 6 003 | -5,709 3 | 0 | 6 058 | 0,651 0 | 0 |
| 5 949 | -3,211 5 | 0 | 6 004 | -7,306 6 | 0 | 6 059 | 23,253 0 | 0 |
| 5 950 | 6,570 8 | 0 | 6 005 | 18,384 8 | 0 | 6 060 | 9,742 3 | 0 |
| 5 951 | 17,327 5 | 0 | 6 006 | 1,979 0 | 0 | 6 061 | -19,341 7 | 0 |
| 5 952 | 23,297 3 | 0 | 6 007 | 4,562 3 | 0 | 6 062 | 5,850 9 | 0 |
| 5 953 | -3,036 9 | 0 | 6 008 | 9,525 9 | 0 | 6 063 | -0,610 5 | 0 |
| 5 954 | -8,283 6 | 0 | 6 009 | 6,519 6 | 0 | 6 064 | 8,761 1 | 0 |
| 5 955 | 13,502 1 | 0 | 6 010 | -19,152 1 | 0 | 6 065 | -0,586 6 | 0 |
| 5 956 | -4,238 1 | 0 | 6 011 | -7,644 0 | 0 | 6 066 | -18,059 7 | 0 |
| 5 957 | -15,313 7 | 0 | 6 012 | -0,076 9 | 0 | 6 067 | -0,386 0 | 0 |
| 5 958 | -10,092 6 | 0 | 6 013 | 10,039 9 | 0 | 6 068 | -9,098 8 | 0 |
| 5 959 | 8,850 8 | 0 | 6 014 | -1,611 9 | 0 | 6 069 | 0 | 0 |
| 5 960 | -1,596 5 | 0 | 6 015 | -5,491 4 | 0 | 6 070 | 0 | 0 |
| 5 961 | -7,539 1 | 0 | 6 016 | -6,553 8 | 0 | 6 071 | 0 | 0 |
| 5 962 | -1,377 2 | 0 | 6 017 | -21,001 0 | 0 | 6 072 | 0 | 0 |
| 5 963 | -5,089 5 | 0 | 6 018 | 9,380 4 | 0 | 6 073 | 0 | 0 |
| 5 964 | -6,773 7 | 0 | 6 019 | 2,276 2 | 0 | 6 074 | 0 | 0 |
| 5 965 | 6,341 2 | 0 | 6 020 | -16,033 9 | 0 | 6 075 | 0 | 0 |
| 5 966 | -10,355 0 | 0 | 6 021 | -7,313 7 | 0 | 6 076 | 0 | 0 |
| 5 967 | -1,263 4 | 0 | 6 022 | 13,085 8 | 0 | 6 077 | 0 | 0 |
| 5 968 | 18,016 8 | 0 | 6 023 | -13,897 8 | 0 | 6 078 | 0 | 0 |
| 5 969 | 3,493 0 | 0 | 6 024 | -14,068 8 | 0 | 6 079 | 0 | 0 |
| 5 970 | 8,535 6 | 0 | 6 025 | -20,540 7 | 0 | 6 080 | 0 | 0 |
| 5 971 | 6,127 8 | 0 | 6 026 | -16,748 4 | 0 | 6 081 | 0 | 0 |
| 5 972 | -4,488 6 | 0 | 6 027 | 9,833 4 | 0 | 6 082 | 0 | 0 |
| 5 973 | -7,071 1 | 0 | 6 028 | 6,034 5 | 0 | 6 083 | 0 | 0 |
| 5 974 | -11,101 3 | 0 | 6 029 | -14,826 5 | 0 | 6 084 | 0 | 0 |
| 5 975 | -1,002 0 | 0 | 6 030 | -3,270 9 | 0 | 6 085 | 0 | 0 |
| 5 976 | 11,818 8 | 0 | 6 031 | -5,061 7 | 0 | 6 086 | 0 | 0 |
| 5 977 | -11,358 6 | 0 | 6 032 | -3,457 2 | 0 | 6 087 | 0 | 0 |
| 5 978 | 3,548 4 | 0 | 6 033 | -12,511 3 | 0 | 6 088 | 0 | 0 |
| 5 979 | 8,084 4 | 0 | 6 034 | -0,366 0 | 0 | 6 089 | 0 | 0 |



Copyright International Organization for Standardization
Provided by IHS under license with ISO
No reproduction or networking permitted without license from IHS
Not for Resale

Table E.15 - Time-domain sequence for Symbol #37 (concluded)

| | | | | | | | | |
|---|---|---|---|---|---|---|---|---|
| 5 980 | 3,398 1 | 0 | 6 035 | 5,267 8 | 0 | 6 090 | 0 | 0 |
| 5 981 | -5,495 0 | 0 | 6 036 | 7,831 7 | 0 | 6 091 | 0 | 0 |
| 5 982 | -1,081 8 | 0 | 6 037 | 1,414 2 | 0 | 6 092 | 0 | 0 |
| 5 983 | 7,661 2 | 0 | 6 038 | 8,031 4 | 0 | 6 093 | 0 | 0 |
| 5 984 | -9,313 4 | 0 | 6 039 | 2,877 7 | 0 | 6 094 | 0 | 0 |
| 5 985 | 5,287 9 | 0 | 6 040 | -2,500 7 | 0 | 6 095 | 0 | 0 |
| 5 986 | 10,778 2 | 0 | 6 041 | 10,711 7 | 0 | 6 096 | 0 | 0 |
| 5 987 | -5,557 6 | 0 | 6 042 | -22,368 5 | 0 | 6 097 | 0 | 0 |
| 5 988 | -2,933 1 | 0 | 6 043 | 1,488 8 | 0 | 6 098 | 0 | 0 |
| 5 989 | 3,171 6 | 0 | 6 044 | -11,438 7 | 0 | 6 099 | 0 | 0 |
| 5 990 | -5,008 0 | 0 | 6 045 | 4,323 4 | 0 | 6 100 | 0 | 0 |
| 5 991 | -13,332 6 | 0 | 6 046 | -24,571 2 | 0 | 6 101 | 0 | 0 |
| 5 992 | -9,003 4 | 0 | 6 047 | 22,203 3 | 0 | 6 102 | 0 | 0 |
| 5 993 | -7,354 5 | 0 | 6 048 | 5,834 1 | 0 | 6 103 | 0 | 0 |
| 5 994 | 20,210 3 | 0 | 6 049 | 5,093 2 | 0 | 6 104 | 0 | 0 |
| 5 995 | 15,426 2 | 0 | 6 050 | 27,960 7 | 0 | 6 105 | 0 | 0 |

DRAFT



Copyright International Organization for Standardization
Provided by IHS under license with ISO
No reproduction or networking permitted without license from IHS
Not for Resale

Table E.16 - Time-domain sequence for Symbol #38

| # | Real | Imag | # | Real | Imag | # | Real | Imag |
|---|---|---|---|---|---|---|---|---|
| 6 106 | -4,242 6 | 0 | 6 161 | 4,308 9 | 0 | 6 216 | 13,579 6 | 0 |
| 6 107 | 1,846 8 | 0 | 6 162 | -10,856 5 | 0 | 6 217 | -19,335 3 | 0 |
| 6 108 | 15,106 1 | 0 | 6 163 | 11,090 5 | 0 | 6 218 | 8,828 4 | 0 |
| 6 109 | -2,741 3 | 0 | 6 164 | 14,078 8 | 0 | 6 219 | 10,115 3 | 0 |
| 6 110 | -12,470 4 | 0 | 6 165 | -20,292 9 | 0 | 6 220 | 16,265 9 | 0 |
| 6 111 | -10,358 6 | 0 | 6 166 | -11,948 1 | 0 | 6 221 | -0,832 9 | 0 |
| 6 112 | -20,588 8 | 0 | 6 167 | -4,304 8 | 0 | 6 222 | -5,777 4 | 0 |
| 6 113 | -10,983 0 | 0 | 6 168 | 5,709 3 | 0 | 6 223 | -0,651 0 | 0 |
| 6 114 | 3,211 5 | 0 | 6 169 | 7,306 6 | 0 | 6 224 | -23,253 0 | 0 |
| 6 115 | -6,570 8 | 0 | 6 170 | -18,384 8 | 0 | 6 225 | -9,742 3 | 0 |
| 6 116 | -17,327 5 | 0 | 6 171 | -1,979 0 | 0 | 6 226 | 19,341 7 | 0 |
| 6 117 | -23,297 3 | 0 | 6 172 | -4,562 3 | 0 | 6 227 | -5,850 9 | 0 |
| 6 118 | 3,036 9 | 0 | 6 173 | -9,525 9 | 0 | 6 228 | 0,610 5 | 0 |
| 6 119 | 8,283 6 | 0 | 6 174 | -6,519 6 | 0 | 6 229 | -8,761 1 | 0 |
| 6 120 | -13,502 1 | 0 | 6 175 | 19,152 1 | 0 | 6 230 | 0,586 6 | 0 |
| 6 121 | 4,238 1 | 0 | 6 176 | 7,644 0 | 0 | 6 231 | 18,059 7 | 0 |
| 6 122 | 15,313 7 | 0 | 6 177 | 0,076 9 | 0 | 6 232 | 0,386 0 | 0 |
| 6 123 | 10,092 6 | 0 | 6 178 | -10,039 9 | 0 | 6 233 | 9,098 8 | 0 |
| 6 124 | -8,850 8 | 0 | 6 179 | 1,611 9 | 0 | 6 234 | 0 | 0 |
| 6 125 | 1,596 5 | 0 | 6 180 | 5,491 4 | 0 | 6 235 | 0 | 0 |
| 6 126 | 7,539 1 | 0 | 6 181 | 6,553 8 | 0 | 6 236 | 0 | 0 |
| 6 127 | 1,377 2 | 0 | 6 182 | 21,001 0 | 0 | 6 237 | 0 | 0 |
| 6 128 | 5,089 5 | 0 | 6 183 | -9,3804 | 0 | 6 238 | 0 | 0 |
| 6 129 | 6,773 7 | 0 | 6 184 | -2,276 2 | 0 | 6 239 | 0 | 0 |
| 6 130 | -6,341 2 | 0 | 6 185 | 16,033 9 | 0 | 6 240 | 0 | 0 |
| 6 131 | 10,355 0 | 0 | 6 186 | 7,313 7 | 0 | 6 241 | 0 | 0 |
| 6 132 | 1,263 4 | 0 | 6 187 | -13,085 8 | 0 | 6 242 | 0 | 0 |
| 6 133 | -18,016 8 | 0 | 6 188 | 13,897 8 | 0 | 6 243 | 0 | 0 |
| 6 134 | -3,493 0 | 0 | 6 189 | 14,068 8 | 0 | 6 244 | 0 | 0 |
| 6 135 | -8,535 6 | 0 | 6 190 | 20,540 7 | 0 | 6 245 | 0 | 0 |
| 6 136 | -6,127 8 | 0 | 6 191 | 16,748 4 | 0 | 6 246 | 0 | 0 |
| 6 137 | 4,488 6 | 0 | 6 192 | -9,833 4 | 0 | 6 247 | 0 | 0 |
| 6 138 | 7,071 1 | 0 | 6 193 | -6,034 5 | 0 | 6 248 | 0 | 0 |
| 6 139 | 11,101 3 | 0 | 6 194 | 14,826 5 | 0 | 6 249 | 0 | 0 |
| 6 140 | 1,002 0 | 0 | 6 195 | 3,270 9 | 0 | 6 250 | 0 | 0 |
| 6 141 | -11,818 8 | 0 | 6 196 | 5,061 7 | 0 | 6 251 | 0 | 0 |
| 6 142 | 11,358 6 | 0 | 6 197 | 3,457 2 | 0 | 6 252 | 0 | 0 |
| 6 143 | -3,548 4 | 0 | 6 198 | 12,511 3 | 0 | 6 253 | 0 | 0 |
| 6 144 | -8,084 4 | 0 | 6 199 | 0,366 0 | 0 | 6 254 | 0 | 0 |



Copyright International Organization for Standardization
Provided by IHS under license with ISO
No reproduction or networking permitted without license from IHS
Not for Resale

Table E.16 - Time-domain sequence for Symbol #38 (concluded)

| | | | | | | | | |
|---|---|---|---|---|---|---|---|---|
| 6 145 | -3,398 1 | 0 | 6 200 | -5,267 8 | 0 | 6 255 | 0 | 0 |
| 6 146 | 5,495 0 | 0 | 6 201 | -7,831 7 | 0 | 6 256 | 0 | 0 |
| 6 147 | 1,081 8 | 0 | 6 202 | -1,414 2 | 0 | 6 257 | 0 | 0 |
| 6 148 | -7,661 2 | 0 | 6 203 | -8,031 4 | 0 | 6 258 | 0 | 0 |
| 6 149 | 9,313 4 | 0 | 6 204 | -2,877 7 | 0 | 6 259 | 0 | 0 |
| 6 150 | -5,287 9 | 0 | 6 205 | 2,500 7 | 0 | 6 260 | 0 | 0 |
| 6 151 | -10,778 2 | 0 | 6 206 | -10,711 7 | 0 | 6 261 | 0 | 0 |
| 6 152 | 5,557 6 | 0 | 6 207 | 22,368 5 | 0 | 6 262 | 0 | 0 |
| 6 153 | 2,933 1 | 0 | 6 208 | -1,488 8 | 0 | 6 263 | 0 | 0 |
| 6 154 | -3,171 6 | 0 | 6 209 | 11,438 7 | 0 | 6 264 | 0 | 0 |
| 6 155 | 5,008 0 | 0 | 6 210 | -4,323 4 | 0 | 6 265 | 0 | 0 |
| 6 156 | 13,332 6 | 0 | 6 211 | 24,571 2 | 0 | 6 266 | 0 | 0 |
| 6 157 | 9,003 4 | 0 | 6 212 | -22,203 3 | 0 | 6 267 | 0 | 0 |
| 6 158 | 7,354 5 | 0 | 6 213 | -5,834 1 | 0 | 6 268 | 0 | 0 |
| 6 159 | -20,210 3 | 0 | 6 214 | -5,093 2 | 0 | 6 269 | 0 | 0 |
| 6 160 | -15,426 2 | 0 | 6 215 | -27,960 7 | 0 | 6 270 | 0 | 0 |

DRAFT



Copyright International Organization for Standardization
Provided by IHS under license with ISO
No reproduction or networking permitted without license from IHS
Not for Resale

Table E.17 - Time-domain sequence for Symbol #39

| # | Real | Imag | # | Real | Imag | # | Real | Imag |
|---|---|---|---|---|---|---|---|---|
| 6 271 | 26,870 1 | 0 | 6 326 | -8,368 8 | 0 | 6 381 | 9,161 4 | 0 |
| 6 272 | -10,743 1 | 0 | 6 327 | -3,600 2 | 0 | 6 382 | -5,940 4 | 0 |
| 6 273 | -18,389 4 | 0 | 6 328 | 18,757 6 | 0 | 6 383 | -2,828 4 | 0 |
| 6 274 | -7,075 4 | 0 | 6 329 | 10,784 8 | 0 | 6 384 | 14,491 3 | 0 |
| 6 275 | -1,520 3 | 0 | 6 330 | 15,380 8 | 0 | 6 385 | -7,618 4 | 0 |
| 6 276 | 1,448 9 | 0 | 6 331 | -3,456 1 | 0 | 6 386 | 1,414 8 | 0 |
| 6 277 | 0,068 1 | 0 | 6 332 | -12,766 2 | 0 | 6 387 | -8,146 4 | 0 |
| 6 278 | 13,371 9 | 0 | 6 333 | 0,434 6 | 0 | 6 388 | -7,379 0 | 0 |
| 6 279 | 0,792 7 | 0 | 6 334 | 5,109 0 | 0 | 6 389 | -4,662 3 | 0 |
| 6 280 | 5,352 8 | 0 | 6 335 | -9,899 5 | 0 | 6 390 | 4,085 9 | 0 |
| 6 281 | -8,204 5 | 0 | 6 336 | -14,910 1 | 0 | 6 391 | 7,114 9 | 0 |
| 6 282 | -7,086 1 | 0 | 6 337 | -0,669 2 | 0 | 6 392 | 8,867 7 | 0 |
| 6 283 | -9,690 1 | 0 | 6 338 | 9,263 5 | 0 | 6 393 | -6,019 7 | 0 |
| 6 284 | -4,419 0 | 0 | 6 339 | 11,691 0 | 0 | 6 394 | 2,679 3 | 0 |
| 6 285 | -1,905 2 | 0 | 6 340 | -2,716 8 | 0 | 6 395 | 25,228 2 | 0 |
| 6 286 | -10,948 9 | 0 | 6 341 | 3,476 3 | 0 | 6 396 | 14,328 3 | 0 |
| 6 287 | -27,656 9 | 0 | 6 342 | 6,251 2 | 0 | 6 397 | 12,688 8 | 0 |
| 6 288 | 10,500 7 | 0 | 6 343 | -5,964 3 | 0 | 6 398 | -17,774 2 | 0 |
| 6 289 | -1,516 4 | 0 | 6 344 | 14,614 5 | 0 | 6 399 | 0 | 0 |
| 6 290 | -14,348 7 | 0 | 6 345 | 16,925 3 | 0 | 6 400 | 0 | 0 |
| 6 291 | -7,796 7 | 0 | 6 346 | 3,901 7 | 0 | 6 401 | 0 | 0 |
| 6 292 | -14,370 2 | 0 | 6 347 | 13,990 1 | 0 | 6 402 | 0 | 0 |
| 6 293 | 3,917 0 | 0 | 6 348 | 0,478 7 | 0 | 6 403 | 0 | 0 |
| 6 294 | 8,809 9 | 0 | 6 349 | 9,245 1 | 0 | 6 404 | 0 | 0 |
| 6 295 | 2,691 7 | 0 | 6 350 | -7,425 3 | 0 | 6 405 | 0 | 0 |
| 6 296 | -5,942 4 | 0 | 6 351 | 16,343 1 | 0 | 6 406 | 0 | 0 |
| 6 297 | -5,832 6 | 0 | 6 352 | -0,661 9 | 0 | 6 407 | 0 | 0 |
| 6 298 | -1,831 8 | 0 | 6 353 | -2,185 4 | 0 | 6 408 | 0 | 0 |
| 6 299 | -21,304 9 | 0 | 6 354 | -3,977 1 | 0 | 6 409 | 0 | 0 |
| 6 300 | -8,606 5 | 0 | 6 355 | -11,918 0 | 0 | 6 410 | 0 | 0 |
| 6 301 | -8,287 3 | 0 | 6 356 | 1,845 3 | 0 | 6 411 | 0 | 0 |
| 6 302 | 1,641 4 | 0 | 6 357 | -10,058 6 | 0 | 6 412 | 0 | 0 |
| 6 303 | 18,384 8 | 0 | 6 358 | 13,542 1 | 0 | 6 413 | 0 | 0 |
| 6 304 | -8,505 5 | 0 | 6 359 | -23,177 0 | 0 | 6 414 | 0 | 0 |
| 6 305 | -10,074 0 | 0 | 6 360 | -23,261 5 | 0 | 6 415 | 0 | 0 |
| 6 306 | 3,655 0 | 0 | 6 361 | 2,751 5 | 0 | 6 416 | 0 | 0 |
| 6 307 | -6,432 4 | 0 | 6 362 | 15,469 6 | 0 | 6 417 | 0 | 0 |
| 6 308 | 5,841 7 | 0 | 6 363 | -6,124 0 | 0 | 6 418 | 0 | 0 |
| 6 309 | 26,897 4 | 0 | 6 364 | -5,812 3 | 0 | 6 419 | 0 | 0 |



Copyright International Organization for Standardization
Provided by IHS under license with ISO
No reproduction or networking permitted without license from IHS
Not for Resale

Table E.17 - Time-domain sequence for Symbol #39 (concluded)

| | | | | | | | | |
|---|---|---|---|---|---|---|---|---|
| 6 310 | 7,234 9 | 0 | 6 365 | 24,380 4 | 0 | 6 420 | 0 | 0 |
| 6 311 | 2,484 1 | 0 | 6 366 | -2,535 0 | 0 | 6 421 | 0 | 0 |
| 6 312 | -25,295 5 | 0 | 6 367 | 15,556 3 | 0 | 6 422 | 0 | 0 |
| 6 313 | 12,419 9 | 0 | 6 368 | 7,998 5 | 0 | 6 423 | 0 | 0 |
| 6 314 | 0,851 6 | 0 | 6 369 | -13,429 2 | 0 | 6 424 | 0 | 0 |
| 6 315 | 5,046 5 | 0 | 6 370 | 2,768 8 | 0 | 6 425 | 0 | 0 |
| 6 316 | 7,516 7 | 0 | 6 371 | -16,022 5 | 0 | 6 426 | 0 | 0 |
| 6 317 | -11,776 6 | 0 | 6 372 | -5,419 9 | 0 | 6 427 | 0 | 0 |
| 6 318 | 7,377 2 | 0 | 6 373 | 16,092 9 | 0 | 6 428 | 0 | 0 |
| 6 319 | -2,828 4 | 0 | 6 374 | 8,196 6 | 0 | 6 429 | 0 | 0 |
| 6 320 | -9,483 6 | 0 | 6 375 | 8,344 4 | 0 | 6 430 | 0 | 0 |
| 6 321 | 10,568 4 | 0 | 6 376 | -4,407 0 | 0 | 6 431 | 0 | 0 |
| 6 322 | 2,294 6 | 0 | 6 377 | -2,138 4 | 0 | 6 432 | 0 | 0 |
| 6 323 | -16,423 2 | 0 | 6 378 | -0,733 0 | 0 | 6 433 | 0 | 0 |
| 6 324 | 9,436 3 | 0 | 6 379 | -15,003 3 | 0 | 6 434 | 0 | 0 |
| 6 325 | -1,789 7 | 0 | 6 380 | -2,033 4 | 0 | 6 435 | 0 | 0 |

DRAFT



Copyright International Organization for Standardization
Provided by IHS under license with ISO
No reproduction or networking permitted without license from IHS
Not for Resale

Table E.18 - Time-domain sequence for Symbol #40

| # | Real | Imag | # | Real | Imag | # | Real | Imag |
|---|---|---|---|---|---|---|---|---|
| 6 436 | -26,870 1 | 0 | 6 491 | 8,368 8 | 0 | 6 546 | -9,161 4 | 0 |
| 6 437 | 10,743 1 | 0 | 6 492 | 3,600 2 | 0 | 6 547 | 5,940 4 | 0 |
| 6 438 | 18,389 4 | 0 | 6 493 | -18,757 6 | 0 | 6 548 | 2,828 4 | 0 |
| 6 439 | 7,075 4 | 0 | 6 494 | -10,784 8 | 0 | 6 549 | -14,491 3 | 0 |
| 6 440 | 1,520 3 | 0 | 6 495 | -15,380 8 | 0 | 6 550 | 7,618 4 | 0 |
| 6 441 | -1,448 9 | 0 | 6 496 | 3,456 1 | 0 | 6 551 | -1,414 8 | 0 |
| 6 442 | -0,068 1 | 0 | 6 497 | 12,766 2 | 0 | 6 552 | 8,146 4 | 0 |
| 6 443 | -13,371 9 | 0 | 6 498 | -0,434 6 | 0 | 6 553 | 7,379 0 | 0 |
| 6 444 | -0,792 7 | 0 | 6 499 | -5,109 0 | 0 | 6 554 | 4,662 3 | 0 |
| 6 445 | -5,352 8 | 0 | 6 500 | 9,899 5 | 0 | 6 555 | -4,085 9 | 0 |
| 6 446 | 8,204 5 | 0 | 6 501 | 14,910 1 | 0 | 6 556 | -7,114 9 | 0 |
| 6 447 | 7,086 1 | 0 | 6 502 | 0,669 2 | 0 | 6 557 | -8,867 7 | 0 |
| 6 448 | 9,690 1 | 0 | 6 503 | -9,263 5 | 0 | 6 558 | 6,019 7 | 0 |
| 6 449 | 4,419 0 | 0 | 6 504 | -11,691 0 | 0 | 6 559 | -2,679 3 | 0 |
| 6 450 | 1,905 2 | 0 | 6 505 | 2,716 8 | 0 | 6 560 | -25,228 2 | 0 |
| 6 451 | 10,948 9 | 0 | 6 506 | -3,476 3 | 0 | 6 561 | -14,328 3 | 0 |
| 6 452 | 27,656 9 | 0 | 6 507 | -6,251 2 | 0 | 6 562 | -12,688 8 | 0 |
| 6 453 | -10,500 7 | 0 | 6 508 | 5,964 3 | 0 | 6 563 | 17,774 2 | 0 |
| 6 454 | 1,516 4 | 0 | 6 509 | -14,614 5 | 0 | 6 564 | 0 | 0 |
| 6 455 | 14,348 7 | 0 | 6 510 | -16,925 3 | 0 | 6 565 | 0 | 0 |
| 6 456 | 7,796 7 | 0 | 6 511 | -3,901 7 | 0 | 6 566 | 0 | 0 |
| 6 457 | 14,370 2 | 0 | 6 512 | -13,990 1 | 0 | 6 567 | 0 | 0 |
| 6 458 | -3,917 0 | 0 | 6 513 | -0,478 7 | 0 | 6 568 | 0 | 0 |
| 6 459 | -8,809 9 | 0 | 6 514 | -9,245 1 | 0 | 6 569 | 0 | 0 |
| 6 460 | -2,691 7 | 0 | 6 515 | 7,425 3 | 0 | 6 570 | 0 | 0 |
| 6 461 | 5,942 4 | 0 | 6 516 | -16,343 1 | 0 | 6 571 | 0 | 0 |
| 6 462 | 5,832 6 | 0 | 6 517 | 0,661 9 | 0 | 6 572 | 0 | 0 |
| 6 463 | 1,831 8 | 0 | 6 518 | 2,185 4 | 0 | 6 573 | 0 | 0 |
| 6 464 | 21,304 9 | 0 | 6 519 | 3,977 1 | 0 | 6 574 | 0 | 0 |
| 6 465 | 8,606 5 | 0 | 6 520 | 11,918 0 | 0 | 6 575 | 0 | 0 |
| 6 466 | 8,287 3 | 0 | 6 521 | -1,845 3 | 0 | 6 576 | 0 | 0 |
| 6 467 | -1,641 4 | 0 | 6 522 | 10,058 6 | 0 | 6 577 | 0 | 0 |
| 6 468 | -18,384 8 | 0 | 6 523 | -13,542 1 | 0 | 6 578 | 0 | 0 |
| 6 469 | 8,505 5 | 0 | 6 524 | 23,177 0 | 0 | 6 579 | 0 | 0 |
| 6 470 | 10,074 0 | 0 | 6 525 | 23,261 5 | 0 | 6 580 | 0 | 0 |
| 6 471 | -3,655 0 | 0 | 6 526 | -2,751 5 | 0 | 6 581 | 0 | 0 |
| 6 472 | 6,432 4 | 0 | 6 527 | -15,469 6 | 0 | 6 582 | 0 | 0 |
| 6 473 | -5,841 7 | 0 | 6 528 | 6,124 0 | 0 | 6 583 | 0 | 0 |
| 6 474 | -26,897 4 | 0 | 6 529 | 5,812 3 | 0 | 6 584 | 0 | 0 |



Copyright International Organization for Standardization
Provided by IHS under license with ISO
No reproduction or networking permitted without license from IHS
Not for Resale

Table E.18 - Time-domain sequence for Symbol #40 (concluded)

| | | | | | | | | |
|---|---|---|---|---|---|---|---|---|
| 6 475 | -7,234 9 | 0 | 6 530 | -24,380 4 | 0 | 6 585 | 0 | 0 |
| 6 476 | -2,484 1 | 0 | 6 531 | 2,535 0 | 0 | 6 586 | 0 | 0 |
| 6 477 | 25,295 5 | 0 | 6 532 | -15,556 3 | 0 | 6 587 | 0 | 0 |
| 6 478 | -12,419 9 | 0 | 6 533 | -7,998 5 | 0 | 6 588 | 0 | 0 |
| 6 479 | -0,851 6 | 0 | 6 534 | 13,429 2 | 0 | 6 589 | 0 | 0 |
| 6 480 | -5,046 5 | 0 | 6 535 | -2,768 8 | 0 | 6 590 | 0 | 0 |
| 6 481 | -7,516 7 | 0 | 6 536 | 16,022 5 | 0 | 6 591 | 0 | 0 |
| 6 482 | 11,776 6 | 0 | 6 537 | 5,419 9 | 0 | 6 592 | 0 | 0 |
| 6 483 | -7,377 2 | 0 | 6 538 | -16,092 9 | 0 | 6 593 | 0 | 0 |
| 6 484 | 2,828 4 | 0 | 6 539 | -8,196 6 | 0 | 6 594 | 0 | 0 |
| 6 485 | 9,483 6 | 0 | 6 540 | -8,344 4 | 0 | 6 595 | 0 | 0 |
| 6 486 | -10,568 4 | 0 | 6 541 | 4,407 0 | 0 | 6 596 | 0 | 0 |
| 6 487 | -2,294 6 | 0 | 6 542 | 2,138 4 | 0 | 6 597 | 0 | 0 |
| 6 488 | 16,423 2 | 0 | 6 543 | 0,733 0 | 0 | 6 598 | 0 | 0 |
| 6 489 | -9,436 3 | 0 | 6 544 | 15,003 3 | 0 | 6 599 | 0 | 0 |
| 6 490 | 1,789 7 | 0 | 6 545 | 2,033 4 | 0 | 6 600 | 0 | 0 |

DRAFT



Copyright International Organization for Standardization
Provided by IHS under license with ISO
No reproduction or networking permitted without license from IHS
Not for Resale

Table E.19 - Time-domain sequence for Symbol #41

| # | Real | Imag | # | Real | Imag | # | Real | Imag |
|---|---|---|---|---|---|---|---|---|
| 6 601 | 21,213 2 | 0 | 6 656 | -29,117 6 | 0 | 6 711 | 13,483 4 | 0 |
| 6 602 | -19,275 9 | 0 | 6 657 | -17,481 4 | 0 | 6 712 | 8,045 0 | 0 |
| 6 603 | -13,017 8 | 0 | 6 658 | 4,450 9 | 0 | 6 713 | -16,828 4 | 0 |
| 6 604 | 11,370 5 | 0 | 6 659 | 9,329 5 | 0 | 6 714 | 1,374 8 | 0 |
| 6 605 | 10,183 8 | 0 | 6 660 | -0,322 6 | 0 | 6 715 | -19,321 5 | 0 |
| 6 606 | 17,785 4 | 0 | 6 661 | -6,376 1 | 0 | 6 716 | -16,336 4 | 0 |
| 6 607 | 9,193 8 | 0 | 6 662 | 8,412 2 | 0 | 6 717 | -1,730 5 | 0 |
| 6 608 | 6,652 8 | 0 | 6 663 | 27,295 9 | 0 | 6 718 | 3,244 2 | 0 |
| 6 609 | 7,749 0 | 0 | 6 664 | -7,408 8 | 0 | 6 719 | -0,065 3 | 0 |
| 6 610 | -5,039 8 | 0 | 6 665 | -21,213 2 | 0 | 6 720 | 10,731 0 | 0 |
| 6 611 | 2,368 7 | 0 | 6 666 | -4,954 7 | 0 | 6 721 | 0,996 2 | 0 |
| 6 612 | 4,646 6 | 0 | 6 667 | -26,675 7 | 0 | 6 722 | 8,185 4 | 0 |
| 6 613 | 12,014 7 | 0 | 6 668 | 1,537 7 | 0 | 6 723 | 3,458 5 | 0 |
| 6 614 | 13,612 6 | 0 | 6 669 | 8,806 2 | 0 | 6 724 | -5,070 8 | 0 |
| 6 615 | -8,424 6 | 0 | 6 670 | 1,462 5 | 0 | 6 725 | 7,201 4 | 0 |
| 6 616 | 6,036 7 | 0 | 6 671 | -11,557 9 | 0 | 6 726 | 2,585 1 | 0 |
| 6 617 | 15,313 7 | 0 | 6 672 | -8,068 4 | 0 | 6 727 | 2,691 4 | 0 |
| 6 618 | 9,286 0 | 0 | 6 673 | -4,234 3 | 0 | 6 728 | -7,998 2 | 0 |
| 6 619 | 13,295 7 | 0 | 6 674 | 1,895 1 | 0 | 6 729 | 0 | 0 |
| 6 620 | -8,057 0 | 0 | 6 675 | -6,513 6 | 0 | 6 730 | 0 | 0 |
| 6 621 | -18,775 5 | 0 | 6 676 | 19,254 3 | 0 | 6 731 | 0 | 0 |
| 6 622 | 11,897 6 | 0 | 6 677 | 7,634 4 | 0 | 6 732 | 0 | 0 |
| 6 623 | 6,211 7 | 0 | 6 678 | 7,219 1 | 0 | 6 733 | 0 | 0 |
| 6 624 | 9,943 0 | 0 | 6 679 | 9,473 9 | 0 | 6 734 | 0 | 0 |
| 6 625 | -4,069 5 | 0 | 6 680 | 5,743 8 | 0 | 6 735 | 0 | 0 |
| 6 626 | -5,846 5 | 0 | 6 681 | 7,313 7 | 0 | 6 736 | 0 | 0 |
| 6 627 | -0,057 4 | 0 | 6 682 | -6,695 6 | 0 | 6 737 | 0 | 0 |
| 6 628 | -14,067 6 | 0 | 6 683 | 6,543 4 | 0 | 6 738 | 0 | 0 |
| 6 629 | -9,371 8 | 0 | 6 684 | -7,811 0 | 0 | 6 739 | 0 | 0 |
| 6 630 | 11,056 0 | 0 | 6 685 | -9,304 2 | 0 | 6 740 | 0 | 0 |
| 6 631 | 3,237 4 | 0 | 6 686 | 8,826 9 | 0 | 6 741 | 0 | 0 |
| 6 632 | -4,220 6 | 0 | 6 687 | -8,073 3 | 0 | 6 742 | 0 | 0 |
| 6 633 | -12,727 9 | 0 | 6 688 | -25,496 3 | 0 | 6 743 | 0 | 0 |
| 6 634 | -3,315 6 | 0 | 6 689 | 3,584 2 | 0 | 6 744 | 0 | 0 |
| 6 635 | 13,565 7 | 0 | 6 690 | -0,887 7 | 0 | 6 745 | 0 | 0 |
| 6 636 | -7,589 7 | 0 | 6 691 | -9,812 0 | 0 | 6 746 | 0 | 0 |
| 6 637 | 0,136 8 | 0 | 6 692 | 8,865 6 | 0 | 6 747 | 0 | 0 |
| 6 638 | -12,363 8 | 0 | 6 693 | -5,110 3 | 0 | 6 748 | 0 | 0 |
| 6 639 | 11,964 0 | 0 | 6 694 | -22,133 0 | 0 | 6 749 | 0 | 0 |



Copyright International Organization for Standardization
Provided by IHS under license with ISO
No reproduction or networking permitted without license from IHS
Not for Resale

Table E.19 - Time-domain sequence for Symbol #41 (concluded)

| | | | | | | | | |
|---|---|---|---|---|---|---|---|---|
| 6 640 | -12,886 5 | 0 | 6 695 | 2,198 4 | 0 | 6 750 | 0 | 0 |
| 6 641 | -14,255 2 | 0 | 6 696 | -2,999 5 | 0 | 6 751 | 0 | 0 |
| 6 642 | 9,361 0 | 0 | 6 697 | 7,071 1 | 0 | 6 752 | 0 | 0 |
| 6 643 | -10,175 9 | 0 | 6 698 | 3,654 2 | 0 | 6 753 | 0 | 0 |
| 6 644 | 30,096 9 | 0 | 6 699 | 9,359 3 | 0 | 6 754 | 0 | 0 |
| 6 645 | -9,411 9 | 0 | 6 700 | 5,805 9 | 0 | 6 755 | 0 | 0 |
| 6 646 | -0,178 4 | 0 | 6 701 | -0,783 7 | 0 | 6 756 | 0 | 0 |
| 6 647 | -0,014 7 | 0 | 6 702 | 4,816 8 | 0 | 6 757 | 0 | 0 |
| 6 648 | 13,711 2 | 0 | 6 703 | 3,700 3 | 0 | 6 758 | 0 | 0 |
| 6 649 | 11,171 6 | 0 | 6 704 | -17,294 9 | 0 | 6 759 | 0 | 0 |
| 6 650 | -5,664 6 | 0 | 6 705 | -6,230 1 | 0 | 6 760 | 0 | 0 |
| 6 651 | 20,937 2 | 0 | 6 706 | 4,100 3 | 0 | 6 761 | 0 | 0 |
| 6 652 | -7,384 6 | 0 | 6 707 | -15,911 5 | 0 | 6 762 | 0 | 0 |
| 6 653 | 0,153 4 | 0 | 6 708 | -5,565 2 | 0 | 6 763 | 0 | 0 |
| 6 654 | 0,303 3 | 0 | 6 709 | -7,894 1 | 0 | 6 764 | 0 | 0 |
| 6 655 | 6,567 9 | 0 | 6 710 | -1,919 0 | 0 | 6 765 | 0 | 0 |

DRAFT ECMA



Copyright International Organization for Standardization
Provided by IHS under license with ISO
No reproduction or networking permitted without license from IHS
Not for Resale

Table E.20 - Time-domain sequence for Symbol #42

| # | Real | Imag | # | Real | Imag | # | Real | Imag |
|---|---|---|---|---|---|---|---|---|
| 6 766 | -21,213 2 | 0 | 6 821 | 29,117 6 | 0 | 6 876 | -13,483 4 | 0 |
| 6 767 | 19,275 9 | 0 | 6 822 | 17,481 4 | 0 | 6 877 | -8,045 0 | 0 |
| 6 768 | 13,017 8 | 0 | 6 823 | -4,450 9 | 0 | 6 878 | 16,828 4 | 0 |
| 6 769 | -11,370 5 | 0 | 6 824 | -9,329 5 | 0 | 6 879 | -1,374 8 | 0 |
| 6 770 | -10,183 8 | 0 | 6 825 | 0,322 6 | 0 | 6 880 | 19,321 5 | 0 |
| 6 771 | -17,785 4 | 0 | 6 826 | 6,376 1 | 0 | 6 881 | 16,336 4 | 0 |
| 6 772 | -9,193 8 | 0 | 6 827 | -8,412 2 | 0 | 6 882 | 1,730 5 | 0 |
| 6 773 | -6,652 8 | 0 | 6 828 | -27,295 9 | 0 | 6 883 | -3,244 2 | 0 |
| 6 774 | -7,749 0 | 0 | 6 829 | 7,408 8 | 0 | 6 884 | 0,065 3 | 0 |
| 6 775 | 5,039 8 | 0 | 6 830 | 21,213 2 | 0 | 6 885 | -10,731 0 | 0 |
| 6 776 | -2,368 7 | 0 | 6 831 | 4,954 7 | 0 | 6 886 | -0,996 2 | 0 |
| 6 777 | -4,646 6 | 0 | 6 832 | 26,675 7 | 0 | 6 887 | -8,185 4 | 0 |
| 6 778 | -12,014 7 | 0 | 6 833 | -1,537 7 | 0 | 6 888 | -3,458 5 | 0 |
| 6 779 | -13,612 6 | 0 | 6 834 | -8,806 2 | 0 | 6 889 | 5,070 8 | 0 |
| 6 780 | 8,424 6 | 0 | 6 835 | -1,462 5 | 0 | 6 890 | -7,201 4 | 0 |
| 6 781 | -6,036 7 | 0 | 6 836 | 11,557 9 | 0 | 6 891 | -2,585 1 | 0 |
| 6 782 | -15,313 7 | 0 | 6 837 | 8,068 4 | 0 | 6 892 | -2,691 4 | 0 |
| 6 783 | -9,286 0 | 0 | 6 838 | 4,234 3 | 0 | 6 893 | 7,998 2 | 0 |
| 6 784 | -13,295 7 | 0 | 6 839 | -1,895 1 | 0 | 6 894 | 0 | 0 |
| 6 785 | 8,057 0 | 0 | 6 840 | 6,513 6 | 0 | 6 895 | 0 | 0 |
| 6 786 | 18,775 5 | 0 | 6 841 | -19,254 3 | 0 | 6 896 | 0 | 0 |
| 6 787 | -11,897 6 | 0 | 6 842 | -7,634 4 | 0 | 6 897 | 0 | 0 |
| 6 788 | -6,211 7 | 0 | 6 843 | -7,219 1 | 0 | 6 898 | 0 | 0 |
| 6 789 | -9,943 0 | 0 | 6 844 | -9,473 9 | 0 | 6 899 | 0 | 0 |
| 6 790 | 4,069 5 | 0 | 6 845 | -5,743 8 | 0 | 6 900 | 0 | 0 |
| 6 791 | 5,846 5 | 0 | 6 846 | -7,313 7 | 0 | 6 901 | 0 | 0 |
| 6 792 | 0,057 4 | 0 | 6 847 | 6,695 6 | 0 | 6 902 | 0 | 0 |
| 6 793 | 14,067 6 | 0 | 6 848 | -6,543 4 | 0 | 6 903 | 0 | 0 |
| 6 794 | 9,371 8 | 0 | 6 849 | 7,811 0 | 0 | 6 904 | 0 | 0 |
| 6 795 | -11,056 0 | 0 | 6 850 | 9,304 2 | 0 | 6 905 | 0 | 0 |
| 6 796 | -3,237 4 | 0 | 6 851 | -8,826 9 | 0 | 6 906 | 0 | 0 |
| 6 797 | 4,220 6 | 0 | 6 852 | 8,073 3 | 0 | 6 907 | 0 | 0 |
| 6 798 | 12,727 9 | 0 | 6 853 | 25,496 3 | 0 | 6 908 | 0 | 0 |
| 6 799 | 3,315 6 | 0 | 6 854 | -3,584 2 | 0 | 6 909 | 0 | 0 |
| 6 800 | -13,565 7 | 0 | 6 855 | 0,887 7 | 0 | 6 910 | 0 | 0 |
| 6 801 | 7,589 7 | 0 | 6 856 | 9,812 0 | 0 | 6 911 | 0 | 0 |
| 6 802 | -0,136 8 | 0 | 6 857 | -8,865 6 | 0 | 6 912 | 0 | 0 |
| 6 803 | 12,363 8 | 0 | 6 858 | 5,110 3 | 0 | 6 913 | 0 | 0 |
| 6 804 | -11,964 0 | 0 | 6 859 | 22,133 0 | 0 | 6 914 | 0 | 0 |



Copyright International Organization for Standardization
Provided by IHS under license with ISO
No reproduction or networking permitted without license from IHS
Not for Resale

Table E.20 - Time-domain sequence for Symbol #42 (concluded)

| | | | | | | | | |
|---|---|---|---|---|---|---|---|---|
| 6 805 | 12,886 5 | 0 | 6 860 | -2,198 4 | 0 | 6 915 | 0 | 0 |
| 6 806 | 14,255 2 | 0 | 6 861 | 2,999 5 | 0 | 6 916 | 0 | 0 |
| 6 807 | -9,361 0 | 0 | 6 862 | -7,071 1 | 0 | 6 917 | 0 | 0 |
| 6 808 | 10,175 9 | 0 | 6 863 | -3,654 2 | 0 | 6 918 | 0 | 0 |
| 6 809 | -30,096 9 | 0 | 6 864 | -9,359 3 | 0 | 6 919 | 0 | 0 |
| 6 810 | 9,411 9 | 0 | 6 865 | -5,805 9 | 0 | 6 920 | 0 | 0 |
| 6 811 | 0,178 4 | 0 | 6 866 | 0,783 7 | 0 | 6 921 | 0 | 0 |
| 6 812 | 0,014 7 | 0 | 6 867 | -4,816 8 | 0 | 6 922 | 0 | 0 |
| 6 813 | -13,711 2 | 0 | 6 868 | -3,700 3 | 0 | 6 923 | 0 | 0 |
| 6 814 | -11,171 6 | 0 | 6 869 | 17,294 9 | 0 | 6 924 | 0 | 0 |
| 6 815 | 5,664 6 | 0 | 6 870 | 6,230 1 | 0 | 6 925 | 0 | 0 |
| 6 816 | -20,937 2 | 0 | 6 871 | -4,100 3 | 0 | 6 926 | 0 | 0 |
| 6 817 | 7,384 6 | 0 | 6 872 | 15,911 5 | 0 | 6 927 | 0 | 0 |
| 6 818 | -0,153 4 | 0 | 6 873 | 5,565 2 | 0 | 6 928 | 0 | 0 |
| 6 819 | -0,303 3 | 0 | 6 874 | 7,894 1 | 0 | 6 929 | 0 | 0 |
| 6 820 | -6,567 9 | 0 | 6 875 | 1,919 0 | 0 | 6 930 | 0 | 0 |

DRAFT ECMA



Copyright International Organization for Standardization
Provided by IHS under license with ISO
No reproduction or networking permitted without license from IHS
Not for Resale

Table E.21 - Time-domain sequence for Symbol #43

| # | Real | Imag | # | Real | Imag | # | Real | Imag |
|---|---|---|---|---|---|---|---|---|
| 6 931 | 5,656 9 | -15,556 3 | 6 986 | 4,597 2 | 9,283 9 | 7 041 | 8,137 8 | 4,878 4 |
| 6 932 | -7,325 6 | -5,885 9 | 6 987 | 10,096 8 | 2,711 9 | 7 042 | 1,787 0 | -1,694 2 |
| 6 933 | -3,456 2 | 8,037 5 | 6 988 | 8,549 9 | 7,928 3 | 7 043 | 0,000 0 | -5,171 6 |
| 6 934 | -2,172 9 | -3,483 9 | 6 989 | -7,970 8 | -5,945 3 | 7 044 | 8,982 9 | 14,194 7 |
| 6 935 | 3,176 5 | 0,675 3 | 6 990 | -2,413 5 | 12,952 6 | 7 045 | 5,436 2 | -1,903 9 |
| 6 936 | 0,295 9 | 6,364 1 | 6 991 | -13,791 0 | -2,240 8 | 7 046 | 2,194 0 | -16,114 5 |
| 6 937 | 4,736 8 | 9,758 2 | 6 992 | 7,330 9 | -2,788 1 | 7 047 | -8,602 5 | -3,129 6 |
| 6 938 | -4,981 5 | 7,427 2 | 6 993 | -5,775 8 | 17,887 2 | 7 048 | 1,627 2 | -4,723 0 |
| 6 939 | 10,879 6 | 2,027 3 | 6 994 | -4,985 6 | 1,308 4 | 7 049 | -0,759 8 | -5,326 0 |
| 6 940 | -0,925 3 | -1,427 6 | 6 995 | 5,656 9 | -12,727 9 | 7 050 | -9,410 5 | 10,118 8 |
| 6 941 | -11,783 0 | -1,955 3 | 6 996 | -24,512 6 | -11,927 4 | 7 051 | -2,783 1 | 5,773 4 |
| 6 942 | -8,651 2 | -8,490 5 | 6 997 | 3,301 9 | 14,119 1 | 7 052 | 6,069 4 | -2,926 2 |
| 6 943 | -7,618 0 | 3,878 4 | 6 998 | -14,672 6 | -6,685 5 | 7 053 | -1,638 0 | -1,187 2 |
| 6 944 | -3,135 9 | -2,107 0 | 6 999 | -4,402 7 | 12,910 1 | 7 054 | -11,337 3 | -2,024 1 |
| 6 945 | 2,504 4 | -9,518 2 | 7 000 | 4,433 0 | -0,394 8 | 7 055 | -4,483 1 | 10,929 5 |
| 6 946 | -5,566 1 | 3,736 2 | 7 001 | -1,501 7 | -9,094 9 | 7 056 | 17,682 7 | 0,590 2 |
| 6 947 | -5,656 9 | -3,656 9 | 7 002 | 10,053 8 | 6,378 4 | 7 057 | 1,513 7 | -4,964 2 |
| 6 948 | 5,286 5 | -0,226 8 | 7 003 | -4,536 5 | -3,198 9 | 7 058 | -10,454 5 | 3,211 2 |
| 6 949 | 10,533 4 | 19,412 0 | 7 004 | 9,052 7 | -3,248 7 | 7 059 | 0 | 0 |
| 6 950 | 0,199 6 | 16,898 5 | 7 005 | -0,968 6 | -0,851 4 | 7 060 | 0 | 0 |
| 6 951 | -7,801 4 | -1,160 1 | 7 006 | 2,348 1 | 1,403 1 | 7 061 | 0 | 0 |
| 6 952 | 4,236 2 | 6,459 1 | 7 007 | 2,857 8 | -7,807 0 | 7 062 | 0 | 0 |
| 6 953 | -7,948 5 | 2,132 1 | 7 008 | 3,128 7 | -6,308 0 | 7 063 | 0 | 0 |
| 6 954 | 0,099 4 | 13,272 8 | 7 009 | 4,305 7 | -0,187 2 | 7 064 | 0 | 0 |
| 6 955 | -2,664 3 | 7,938 2 | 7 010 | 14,785 6 | -2,728 7 | 7 065 | 0 | 0 |
| 6 956 | 7,205 9 | 3,694 7 | 7 011 | -5,656 9 | -7,656 9 | 7 066 | 0 | 0 |
| 6 957 | -0,624 6 | 2,353 4 | 7 012 | 2,856 0 | 6,998 3 | 7 067 | 0 | 0 |
| 6 958 | 2,081 0 | -5,073 6 | 7 013 | -9,584 1 | -6,747 3 | 7 068 | 0 | 0 |
| 6 959 | -1,536 7 | 2,502 8 | 7 014 | -8,930 1 | 13,590 3 | 7 069 | 0 | 0 |
| 6 960 | -2,022 7 | -6,061 5 | 7 015 | 5,966 2 | -5,871 8 | 7 070 | 0 | 0 |
| 6 961 | -5,293 6 | -7,008 4 | 7 016 | 7,428 2 | 1,333 2 | 7 071 | 0 | 0 |
| 6 962 | 3,644 7 | -1,785 7 | 7 017 | -2,777 9 | 11,306 0 | 7 072 | 0 | 0 |
| 6 963 | 8,485 3 | -4,242 6 | 7 018 | -0,244 5 | -8,311 9 | 7 073 | 0 | 0 |
| 6 964 | 4,045 8 | -3,677 0 | 7 019 | 17,978 0 | 0,547 1 | 7 074 | 0 | 0 |
| 6 965 | 6,385 7 | -0,758 4 | 7 020 | -19,658 1 | -18,247 1 | 7 075 | 0 | 0 |
| 6 966 | -7,842 0 | -12,396 5 | 7 021 | -7,423 5 | -2,425 3 | 7 076 | 0 | 0 |
| 6 967 | -4,967 1 | -3,845 4 | 7 022 | 2,093 1 | 0,480 3 | 7 077 | 0 | 0 |
| 6 968 | -4,223 2 | -7,561 2 | 7 023 | 8,497 1 | -5,534 7 | 7 078 | 0 | 0 |
| 6 969 | 2,426 6 | 4,141 3 | 7 024 | 3,843 9 | -8,978 9 | 7 079 | 0 | 0 |



Copyright International Organization for Standardization
Provided by IHS under license with ISO
No reproduction or networking permitted without license from IHS
Not for Resale

Table E.21 - Time-domain sequence for Symbol #43 (concluded)

| | | | | | | | | |
|---|---|---|---|---|---|---|---|---|
| 6 970 | -5,320 1 | 4,908 2 | 7 025 | 14,883 0 | 10,524 4 | 7 080 | 0 | 0 |
| 6 971 | -1,306 1 | 2,331 8 | 7 026 | -2,254 5 | 4,393 0 | 7 081 | 0 | 0 |
| 6 972 | -9,210 8 | -6,174 1 | 7 027 | 2,828 4 | -7,071 1 | 7 082 | 0 | 0 |
| 6 973 | -5,805 0 | -23,626 0 | 7 028 | 8,130 3 | -11,196 1 | 7 083 | 0 | 0 |
| 6 974 | 27,173 5 | -0,413 1 | 7 029 | 0,111 8 | -19,384 6 | 7 084 | 0 | 0 |
| 6 975 | 0,429 4 | 11,300 2 | 7 030 | -0,954 5 | -6,514 2 | 7 085 | 0 | 0 |
| 6 976 | -6,505 3 | 7,578 4 | 7 031 | 14,193 4 | 3,916 9 | 7 086 | 0 | 0 |
| 6 977 | -0,961 5 | -8,298 2 | 7 032 | 13,953 4 | 1,725 6 | 7 087 | 0 | 0 |
| 6 978 | -10,063 6 | -4,361 0 | 7 033 | 6,447 6 | -1,270 8 | 7 088 | 0 | 0 |
| 6 979 | 0,000 0 | 10,828 4 | 7 034 | -4,314 3 | 9,471 0 | 7 089 | 0 | 0 |
| 6 980 | -12,602 2 | 4,736 0 | 7 035 | -16,350 8 | 4,496 6 | 7 090 | 0 | 0 |
| 6 981 | -0,042 3 | -0,088 2 | 7 036 | 4,682 6 | 4,757 4 | 7 091 | 0 | 0 |
| 6 982 | -4,369 8 | 11,812 8 | 7 037 | 0,899 7 | -1,676 6 | 7 092 | 0 | 0 |
| 6 983 | 2,437 7 | 7,818 4 | 7 038 | 2,627 2 | -5,314 3 | 7 093 | 0 | 0 |
| 6 984 | 3,892 6 | -4,064 3 | 7 039 | -6,983 0 | -1,714 8 | 7 094 | 0 | 0 |
| 6 985 | 2,690 5 | 7,667 7 | 7 040 | 2,661 9 | -3,691 3 | 7 095 | 0 | 0 |

DRAFT ECMA



Copyright International Organization for Standardization
Provided by IHS under license with ISO
No reproduction or networking permitted without license from IHS
Not for Resale

Table E.22 - Time-domain sequence for Symbol #44

| # | Real | Imag | # | Real | Imag | # | Real | Imag |
|---|---|---|---|---|---|---|---|---|
| 7 096 | -15,556 3 | 5,656 9 | 7 151 | 9,283 9 | 4,597 2 | 7 206 | 4,878 4 | 8,137 8 |
| 7 097 | -5,885 9 | -7,325 6 | 7 152 | 2,711 9 | 10,096 8 | 7 207 | -1,694 2 | 1,787 0 |
| 7 098 | 8,037 5 | -3,456 2 | 7 153 | 7,928 3 | 8,549 9 | 7 208 | -5,171 6 | 0,000 0 |
| 7 099 | -3,483 9 | -2,172 9 | 7 154 | -5,945 3 | -7,970 8 | 7 209 | 14,194 7 | 8,982 9 |
| 7 100 | 0,675 3 | 3,176 5 | 7 155 | 12,952 6 | -2,413 5 | 7 210 | -1,903 9 | 5,436 2 |
| 7 101 | 6,364 1 | 0,295 9 | 7 156 | -2,240 8 | -13,791 0 | 7 211 | -16,114 5 | 2,194 0 |
| 7 102 | 9,758 2 | 4,736 8 | 7 157 | -2,788 1 | 7,330 9 | 7 212 | -3,129 6 | -8,602 5 |
| 7 103 | 7,427 2 | -4,981 5 | 7 158 | 17,887 2 | -5,775 8 | 7 213 | -4,723 0 | 1,627 2 |
| 7 104 | 2,027 3 | 10,879 6 | 7 159 | 1,308 4 | -4,985 6 | 7 214 | -5,326 0 | -0,759 8 |
| 7 105 | -1,427 6 | -0,925 3 | 7 160 | -12,727 9 | 5,656 9 | 7 215 | 10,118 8 | -9,410 5 |
| 7 106 | -1,955 3 | -11,783 0 | 7 161 | -11,927 4 | -24,512 6 | 7 216 | 5,773 4 | -2,783 1 |
| 7 107 | -8,490 5 | -8,651 2 | 7 162 | 14,119 1 | 3,301 9 | 7 217 | -2,926 2 | 6,069 4 |
| 7 108 | 3,878 4 | -7,618 0 | 7 163 | -6,685 5 | -14,672 6 | 7 218 | -1,187 2 | -1,638 0 |
| 7 109 | -2,107 0 | -3,135 9 | 7 164 | 12,910 1 | -4,402 7 | 7 219 | -2,024 1 | -11,337 3 |
| 7 110 | -9,518 2 | 2,504 4 | 7 165 | -0,394 8 | 4,433 0 | 7 220 | 10,929 5 | -4,483 1 |
| 7 111 | 3,736 2 | -5,566 1 | 7 166 | -9,094 9 | -1,501 7 | 7 221 | 0,590 2 | 17,682 7 |
| 7 112 | -3,656 9 | -5,656 9 | 7 167 | 6,378 4 | 10,053 8 | 7 222 | -4,964 2 | 1,513 7 |
| 7 113 | -0,226 8 | 5,286 5 | 7 168 | -3,198 9 | -4,536 5 | 7 223 | 3,211 2 | -10,454 5 |
| 7 114 | 19,412 0 | 10,533 4 | 7 169 | -3,248 7 | 9,052 7 | 7 224 | 0 | 0 |
| 7 115 | 16,898 5 | 0,199 6 | 7 170 | -0,851 4 | -0,968 6 | 7 225 | 0 | 0 |
| 7 116 | -1,160 1 | -7,801 4 | 7 171 | 1,403 1 | 2,348 1 | 7 226 | 0 | 0 |
| 7 117 | 6,459 1 | 4,236 2 | 7 172 | -7,807 0 | 2,857 8 | 7 227 | 0 | 0 |
| 7 118 | 2,132 1 | -7,948 5 | 7 173 | -6,308 0 | 3,128 7 | 7 228 | 0 | 0 |
| 7 119 | 13,272 8 | 0,099 4 | 7 174 | -0,187 2 | 4,305 7 | 7 229 | 0 | 0 |
| 7 120 | 7,938 2 | -2,664 3 | 7 175 | -2,728 7 | 14,785 6 | 7 230 | 0 | 0 |
| 7 121 | 3,694 7 | 7,205 9 | 7 176 | -7,656 9 | -5,656 9 | 7 231 | 0 | 0 |
| 7 122 | 2,353 4 | -0,624 6 | 7 177 | 6,998 3 | 2,856 0 | 7 232 | 0 | 0 |
| 7 123 | -5,073 6 | 2,081 0 | 7 178 | -6,747 3 | -9,584 1 | 7 233 | 0 | 0 |
| 7 124 | 2,502 8 | -1,536 7 | 7 179 | 13,590 3 | -8,930 1 | 7 234 | 0 | 0 |
| 7 125 | -6,061 5 | -2,022 7 | 7 180 | -5,871 8 | 5,966 2 | 7 235 | 0 | 0 |
| 7 126 | -7,008 4 | -5,293 6 | 7 181 | 1,333 2 | 7,428 2 | 7 236 | 0 | 0 |
| 7 127 | -1,785 7 | 3,644 7 | 7 182 | 11,306 0 | -2,777 9 | 7 237 | 0 | 0 |
| 7 128 | -4,242 6 | 8,485 3 | 7 183 | -8,311 9 | -0,244 5 | 7 238 | 0 | 0 |
| 7 129 | -3,677 0 | 4,045 8 | 7 184 | 0,547 1 | 17,978 0 | 7 239 | 0 | 0 |
| 7 130 | -0,758 4 | 6,385 7 | 7 185 | -18,247 1 | -19,658 1 | 7 240 | 0 | 0 |
| 7 131 | -12,396 5 | -7,842 0 | 7 186 | -2,425 3 | -7,423 5 | 7 241 | 0 | 0 |
| 7 132 | -3,845 4 | -4,967 1 | 7 187 | 0,480 3 | 2,093 1 | 7 242 | 0 | 0 |
| 7 133 | -7,561 2 | -4,223 2 | 7 188 | -5,534 7 | 8,497 1 | 7 243 | 0 | 0 |
| 7 134 | 4,141 3 | 2,426 6 | 7 189 | -8,978 9 | 3,843 9 | 7 244 | 0 | 0 |



Copyright International Organization for Standardization
Provided by IHS under license with ISO
No reproduction or networking permitted without license from IHS
Not for Resale

Table E.22 - Time-domain sequence for Symbol #44 (concluded)

| | | | | | | | | |
|---|---|---|---|---|---|---|---|---|
| 7 135 | 4,908 2 | -5,320 1 | 7 190 | 10,524 4 | 14,883 0 | 7 245 | 0 | 0 |
| 7 136 | 2,331 8 | -1,306 1 | 7 191 | 4,393 0 | -2,254 5 | 7 246 | 0 | 0 |
| 7 137 | -6,174 1 | -9,210 8 | 7 192 | -7,071 1 | 2,828 4 | 7 247 | 0 | 0 |
| 7 138 | -23,626 0 | -5,805 0 | 7 193 | -11,196 1 | 8,130 3 | 7 248 | 0 | 0 |
| 7 139 | -0,413 1 | 27,173 5 | 7 194 | -19,384 6 | 0,111 8 | 7 249 | 0 | 0 |
| 7 140 | 11,300 2 | 0,429 4 | 7 195 | -6,514 2 | -0,954 5 | 7 250 | 0 | 0 |
| 7 141 | 7,578 4 | -6,505 3 | 7 196 | 3,916 9 | 14,193 4 | 7 251 | 0 | 0 |
| 7 142 | -8,298 2 | -0,961 5 | 7 197 | 1,725 6 | 13,953 4 | 7 252 | 0 | 0 |
| 7 143 | -4,361 0 | -10,063 6 | 7 198 | -1,270 8 | 6,447 6 | 7 253 | 0 | 0 |
| 7 144 | 10,828 4 | 0,000 0 | 7 199 | 9,471 0 | -4,314 3 | 7 254 | 0 | 0 |
| 7 145 | 4,736 0 | -12,602 2 | 7 200 | 4,496 6 | -16,350 8 | 7 255 | 0 | 0 |
| 7 146 | -0,088 2 | -0,042 3 | 7 201 | 4,757 4 | 4,682 6 | 7 256 | 0 | 0 |
| 7 147 | 11,812 8 | -4,369 8 | 7 202 | -1,676 6 | 0,899 7 | 7 257 | 0 | 0 |
| 7 148 | 7,818 4 | 2,437 7 | 7 203 | -5,314 3 | 2,627 2 | 7 258 | 0 | 0 |
| 7 149 | -4,064 3 | 3,892 6 | 7 204 | -1,714 8 | -6,983 0 | 7 259 | 0 | 0 |
| 7 150 | 7,667 7 | 2,690 5 | 7 205 | -3,691 3 | 2,661 9 | 7 260 | 0 | 0 |

DRAFT ONLY



Copyright International Organization for Standardization
Provided by IHS under license with ISO
No reproduction or networking permitted without license from IHS
Not for Resale

Table E.23 - Time-domain sequence for Symbol #45

| # | Real | Imag | # | Real | Imag | # | Real | Imag |
|---|---|---|---|---|---|---|---|---|
| 7 261 | 4,242 6 | 1,414 2 | 7 316 | -3,796 5 | -3,834 8 | 7 371 | 1,027 2 | 9,755 2 |
| 7 262 | -9,028 4 | -6,435 8 | 7 317 | 10,047 9 | 1,074 4 | 7 372 | -6,019 2 | 8,871 6 |
| 7 263 | 9,932 9 | 5,495 5 | 7 318 | 5,845 6 | -5,357 4 | 7 373 | 0,585 8 | 6,000 0 |
| 7 264 | -15,610 0 | -19,194 0 | 7 319 | 5,677 3 | 8,084 4 | 7 374 | 1,377 0 | -8,063 4 |
| 7 265 | 6,426 2 | -3,981 1 | 7 320 | -4,531 4 | -9,459 4 | 7 375 | -10,625 4 | -0,109 1 |
| 7 266 | 8,677 6 | 2,761 1 | 7 321 | 4,137 8 | -11,239 5 | 7 376 | 8,684 4 | 12,721 2 |
| 7 267 | 1,615 6 | 8,698 3 | 7 322 | 11,943 3 | 9,880 1 | 7 377 | -5,083 9 | -0,301 2 |
| 7 268 | 0,680 4 | 11,938 7 | 7 323 | -8,914 4 | -2,326 7 | 7 378 | -20,526 5 | 3,328 7 |
| 7 269 | -2,386 9 | 6,262 0 | 7 324 | -5,206 3 | 1,566 9 | 7 379 | -4,707 8 | 7,884 4 |
| 7 270 | -9,205 5 | 0,501 3 | 7 325 | 1,414 2 | -4,242 6 | 7 380 | 5,264 3 | -1,026 7 |
| 7 271 | -5,979 9 | 12,076 9 | 7 326 | -5,185 0 | 7,314 6 | 7 381 | -4,734 2 | 0,440 3 |
| 7 272 | 8,642 4 | 12,281 4 | 7 327 | -4,743 1 | -5,569 1 | 7 382 | 5,228 4 | 5,437 5 |
| 7 273 | 11,032 5 | 5,905 8 | 7 328 | 1,903 6 | 2,351 9 | 7 383 | -15,966 4 | -9,197 0 |
| 7 274 | 0,869 5 | -3,433 7 | 7 329 | -2,946 0 | -2,428 6 | 7 384 | 2,517 2 | 16,165 3 |
| 7 275 | 3,348 8 | 2,528 0 | 7 330 | 9,462 1 | -16,457 9 | 7 385 | -2,570 1 | 0,930 9 |
| 7 276 | 13,941 2 | 9,155 5 | 7 331 | 19,658 2 | -3,206 5 | 7 386 | 10,175 6 | -1,661 1 |
| 7 277 | 1,414 2 | 4,828 4 | 7 332 | -0,993 1 | -1,087 8 | 7 387 | -6,448 3 | -20,493 3 |
| 7 278 | -1,330 3 | -4,853 5 | 7 333 | -7,613 1 | 2,566 5 | 7 388 | -11,027 3 | 0,305 1 |
| 7 279 | -1,944 1 | 2,773 1 | 7 334 | -3,672 4 | -7,234 1 | 7 389 | 0 | 0 |
| 7 280 | 2,807 1 | -8,257 9 | 7 335 | -16,209 1 | -2,978 9 | 7 390 | 0 | 0 |
| 7 281 | 1,112 2 | 13,072 4 | 7 336 | -4,610 8 | 9,234 6 | 7 391 | 0 | 0 |
| 7 282 | 2,512 6 | -4,393 6 | 7 337 | 2,839 7 | -1,457 4 | 7 392 | 0 | 0 |
| 7 283 | -7,298 0 | 0,467 6 | 7 338 | 10,557 1 | -1,259 9 | 7 393 | 0 | 0 |
| 7 284 | -2,086 3 | 13,910 7 | 7 339 | -3,159 8 | 11,255 1 | 7 394 | 0 | 0 |
| 7 285 | 11,718 3 | -4,781 8 | 7 340 | 6,820 4 | 8,555 5 | 7 395 | 0 | 0 |
| 7 286 | -15,161 4 | 5,256 2 | 7 341 | 1,414 2 | 0,828 4 | 7 396 | 0 | 0 |
| 7 287 | -4,996 3 | -5,857 3 | 7 342 | 6,405 3 | 4,549 3 | 7 397 | 0 | 0 |
| 7 288 | -8,705 9 | -0,755 8 | 7 343 | 14,528 6 | 7,140 5 | 7 398 | 0 | 0 |
| 7 289 | -6,063 7 | -6,811 6 | 7 344 | 5,088 7 | -4,886 2 | 7 399 | 0 | 0 |
| 7 290 | 8,926 1 | 1,482 9 | 7 345 | -3,492 2 | -6,889 8 | 7 400 | 0 | 0 |
| 7 291 | -1,114 2 | 3,699 0 | 7 346 | -10,258 0 | -4,581 5 | 7 401 | 0 | 0 |
| 7 292 | 5,370 7 | 8,590 4 | 7 347 | 16,549 2 | 2,719 0 | 7 402 | 0 | 0 |
| 7 293 | -1,414 2 | -4,242 6 | 7 348 | -1,532 0 | -5,992 5 | 7 403 | 0 | 0 |
| 7 294 | -15,766 6 | 0,587 2 | 7 349 | 5,595 4 | -13,703 5 | 7 404 | 0 | 0 |
| 7 295 | -6,906 8 | -7,358 5 | 7 350 | 11,552 9 | 16,832 1 | 7 405 | 0 | 0 |
| 7 296 | 3,602 5 | -0,998 7 | 7 351 | 5,019 6 | 1,235 8 | 7 406 | 0 | 0 |
| 7 297 | -3,636 4 | -6,472 5 | 7 352 | 13,414 4 | -1,696 3 | 7 407 | 0 | 0 |
| 7 298 | -1,675 2 | -1,596 0 | 7 353 | 5,466 5 | 9,120 2 | 7 408 | 0 | 0 |
| 7 299 | -13,814 4 | 3,882 6 | 7 354 | 7,299 9 | 2,032 0 | 7 409 | 0 | 0 |



Copyright International Organization for Standardization
Provided by IHS under license with ISO
No reproduction or networking permitted without license from IHS
Not for Resale

Table E.23 - Time-domain sequence for Symbol #45 (concluded)

| | | | | | | | | |
|---|---|---|---|---|---|---|---|---|
| 7 300 | 0,666 5 | -4,331 6 | 7 355 | -11,023 6 | 2,934 3 | 7 410 | 0 | 0 |
| 7 301 | 3,917 6 | -0,820 4 | 7 356 | -14,759 5 | -7,602 7 | 7 411 | 0 | 0 |
| 7 302 | 6,020 9 | 2,376 8 | 7 357 | -4,242 6 | -9,899 5 | 7 412 | 0 | 0 |
| 7 303 | 3,572 7 | 2,819 3 | 7 358 | -0,922 9 | 11,674 4 | 7 413 | 0 | 0 |
| 7 304 | 15,153 3 | -18,226 6 | 7 359 | 11,121 6 | 14,027 5 | 7 414 | 0 | 0 |
| 7 305 | 12,825 5 | 10,140 1 | 7 360 | 4,315 3 | -9,893 1 | 7 415 | 0 | 0 |
| 7 306 | 3,060 3 | 7,897 2 | 7 361 | -5,500 7 | -6,431 5 | 7 416 | 0 | 0 |
| 7 307 | 6,970 5 | -4,037 9 | 7 362 | 0,088 6 | -4,961 1 | 7 417 | 0 | 0 |
| 7 308 | -0,790 4 | 5,669 5 | 7 363 | -10,384 4 | -0,985 5 | 7 418 | 0 | 0 |
| 7 309 | -3,414 2 | -6,000 0 | 7 364 | -18,532 9 | -12,687 8 | 7 419 | 0 | 0 |
| 7 310 | -4,537 8 | -7,884 4 | 7 365 | 6,082 4 | -2,351 2 | 7 420 | 0 | 0 |
| 7 311 | 1,322 6 | 2,913 9 | 7 366 | -3,619 8 | 17,299 2 | 7 421 | 0 | 0 |
| 7 312 | -5,244 1 | -4,418 7 | 7 367 | -6,431 6 | -2,869 4 | 7 422 | 0 | 0 |
| 7 313 | 1,807 1 | -9,195 0 | 7 368 | 4,573 3 | -6,967 8 | 7 423 | 0 | 0 |
| 7 314 | -3,638 7 | -6,675 3 | 7 369 | 6,272 9 | -6,588 4 | 7 424 | 0 | 0 |
| 7 315 | -4,932 1 | -0,146 0 | 7 370 | -5,474 2 | -14,362 1 | 7 425 | 0 | 0 |

DRAFT ECMA



Copyright International Organization for Standardization
Provided by IHS under license with ISO
No reproduction or networking permitted without license from IHS
Not for Resale

Table E.24 - Time-domain sequence for Symbol #46

| # | Real | Imag | # | Real | Imag | # | Real | Imag |
|---|---|---|---|---|---|---|---|---|
| 7 426 | 1,414 2 | 4,242 6 | 7 481 | -3,834 8 | -3,796 5 | 7 536 | 9,755 2 | 1,027 2 |
| 7 427 | -6,435 8 | -9,028 4 | 7 482 | 1,074 4 | 10,047 9 | 7 537 | 8,871 6 | -6,019 2 |
| 7 428 | 5,495 5 | 9,932 9 | 7 483 | -5,357 4 | 5,845 6 | 7 538 | 6,000 0 | 0,585 8 |
| 7 429 | -19,194 0 | -15,610 0 | 7 484 | 8,084 4 | 5,677 3 | 7 539 | -8,063 4 | 1,377 0 |
| 7 430 | -3,981 1 | 6,426 2 | 7 485 | -9,459 4 | -4,531 4 | 7 540 | -0,109 1 | -10,625 4 |
| 7 431 | 2,761 1 | 8,677 6 | 7 486 | -11,239 5 | 4,137 8 | 7 541 | 12,721 2 | 8,684 4 |
| 7 432 | 8,698 3 | 1,615 6 | 7 487 | 9,880 1 | 11,943 3 | 7 542 | -0,301 2 | -5,083 9 |
| 7 433 | 11,938 7 | 0,680 4 | 7 488 | -2,326 7 | -8,914 4 | 7 543 | 3,328 7 | -20,526 5 |
| 7 434 | 6,262 0 | -2,386 9 | 7 489 | 1,566 9 | -5,206 3 | 7 544 | 7,884 4 | -4,707 8 |
| 7 435 | 0,501 3 | -9,205 5 | 7 490 | -4,242 6 | 1,414 2 | 7 545 | -1,026 7 | 5,264 3 |
| 7 436 | 12,076 9 | -5,979 9 | 7 491 | 7,314 6 | -5,185 0 | 7 546 | 0,440 3 | -4,734 2 |
| 7 437 | 12,281 4 | 8,642 4 | 7 492 | -5,569 1 | -4,743 1 | 7 547 | 5,437 5 | 5,228 4 |
| 7 438 | 5,905 8 | 11,032 5 | 7 493 | 2,351 9 | 1,903 6 | 7 548 | -9,197 0 | -15,966 4 |
| 7 439 | -3,433 7 | 0,869 5 | 7 494 | -2,428 6 | -2,946 0 | 7 549 | 16,165 3 | 2,517 2 |
| 7 440 | 2,528 0 | 3,348 8 | 7 495 | -16,457 9 | 9,462 1 | 7 550 | 0,930 9 | -2,570 1 |
| 7 441 | 9,155 5 | 13,941 2 | 7 496 | -3,206 5 | 19,658 2 | 7 551 | -1,661 1 | 10,175 6 |
| 7 442 | 4,828 4 | 1,414 2 | 7 497 | -1,087 8 | -0,993 1 | 7 552 | -20,493 3 | -6,448 3 |
| 7 443 | -4,853 5 | -1,330 3 | 7 498 | 2,566 5 | -7,613 1 | 7 553 | 0,305 1 | -11,027 3 |
| 7 444 | 2,773 1 | -1,944 1 | 7 499 | -7,234 1 | -3,672 4 | 7 554 | 0 | 0 |
| 7 445 | -8,257 9 | 2,807 1 | 7 500 | -2,978 9 | -16,209 1 | 7 555 | 0 | 0 |
| 7 446 | 13,072 4 | 1,112 2 | 7 501 | 9,234 6 | -4,610 8 | 7 556 | 0 | 0 |
| 7 447 | -4,393 6 | 2,512 6 | 7 502 | -1,457 4 | 2,839 7 | 7 557 | 0 | 0 |
| 7 448 | 0,467 6 | -7,298 0 | 7 503 | -1,259 9 | 10,557 1 | 7 558 | 0 | 0 |
| 7 449 | 13,910 7 | -2,086 3 | 7 504 | 11,255 1 | -3,159 8 | 7 559 | 0 | 0 |
| 7 450 | -4,781 8 | 11,718 3 | 7 505 | 8,555 5 | 6,820 4 | 7 560 | 0 | 0 |
| 7 451 | 5,256 2 | -15,161 4 | 7 506 | 0,828 4 | 1,414 2 | 7 561 | 0 | 0 |
| 7 452 | -5,857 3 | -4,996 3 | 7 507 | 4,549 3 | 6,405 3 | 7 562 | 0 | 0 |
| 7 453 | -0,755 8 | -8,705 9 | 7 508 | 7,140 5 | 14,528 6 | 7 563 | 0 | 0 |
| 7 454 | -6,811 6 | -6,063 7 | 7 509 | -4,886 2 | 5,088 7 | 7 564 | 0 | 0 |
| 7 455 | 1,482 9 | 8,926 1 | 7 510 | -6,889 8 | -3,492 2 | 7 565 | 0 | 0 |
| 7 456 | 3,699 0 | -1,114 2 | 7 511 | -4,581 5 | -10,258 0 | 7 566 | 0 | 0 |
| 7 457 | 8,590 4 | 5,370 7 | 7 512 | 2,719 0 | 16,549 2 | 7 567 | 0 | 0 |
| 7 458 | -4,242 6 | -1,414 2 | 7 513 | -5,992 5 | -1,532 0 | 7 568 | 0 | 0 |
| 7 459 | 0,587 2 | -15,766 6 | 7 514 | -13,703 5 | 5,595 4 | 7 569 | 0 | 0 |
| 7 460 | -7,358 5 | -6,906 8 | 7 515 | 16,832 1 | 11,552 9 | 7 570 | 0 | 0 |
| 7 461 | -0,998 7 | 3,602 5 | 7 516 | 1,235 8 | 5,019 6 | 7 571 | 0 | 0 |
| 7 462 | -6,472 5 | -3,636 4 | 7 517 | -1,696 3 | 13,414 4 | 7 572 | 0 | 0 |
| 7 463 | -1,596 0 | -1,675 2 | 7 518 | 9,120 2 | 5,466 5 | 7 573 | 0 | 0 |
| 7 464 | 3,882 6 | -13,814 4 | 7 519 | 2,032 0 | 7,299 9 | 7 574 | 0 | 0 |



Copyright International Organization for Standardization
Provided by IHS under license with ISO
No reproduction or networking permitted without license from IHS
Not for Resale

Table E.24 - Time-domain sequence for Symbol #46 (concluded)

| | | | | | | | | |
|---|---|---|---|---|---|---|---|---|
| 7 465 | -4,331 6 | 0,666 5 | 7 520 | 2,934 3 | -11,023 6 | 7 575 | 0 | 0 |
| 7 466 | -0,820 4 | 3,917 6 | 7 521 | -7,602 7 | -14,759 5 | 7 576 | 0 | 0 |
| 7 467 | 2,376 8 | 6,020 9 | 7 522 | -9,899 5 | -4,242 6 | 7 577 | 0 | 0 |
| 7 468 | 2,819 3 | 3,572 7 | 7 523 | 11,674 4 | -0,922 9 | 7 578 | 0 | 0 |
| 7 469 | -18,226 6 | 15,153 3 | 7 524 | 14,027 5 | 11,121 6 | 7 579 | 0 | 0 |
| 7 470 | 10,140 1 | 12,825 5 | 7 525 | -9,893 1 | 4,315 3 | 7 580 | 0 | 0 |
| 7 471 | 7,897 2 | 3,060 3 | 7 526 | -6,431 5 | -5,500 7 | 7 581 | 0 | 0 |
| 7 472 | -4,037 9 | 6,970 5 | 7 527 | -4,961 1 | 0,088 6 | 7 582 | 0 | 0 |
| 7 473 | 5,669 5 | -0,790 4 | 7 528 | -0,985 5 | -10,384 4 | 7 583 | 0 | 0 |
| 7 474 | -6,000 0 | -3,414 2 | 7 529 | -12,687 8 | -18,532 9 | 7 584 | 0 | 0 |
| 7 475 | -7,884 4 | -4,537 8 | 7 530 | -2,351 2 | 6,082 4 | 7 585 | 0 | 0 |
| 7 476 | 2,913 9 | 1,322 6 | 7 531 | 17,299 2 | -3,619 8 | 7 586 | 0 | 0 |
| 7 477 | -4,418 7 | -5,244 1 | 7 532 | -2,869 4 | -6,431 6 | 7 587 | 0 | 0 |
| 7 478 | -9,195 0 | 1,807 1 | 7 533 | -6,967 8 | 4,573 3 | 7 588 | 0 | 0 |
| 7 479 | -6,675 3 | -3,638 7 | 7 534 | -6,588 4 | 6,272 9 | 7 589 | 0 | 0 |
| 7 480 | -0,146 0 | -4,932 1 | 7 535 | -14,362 1 | -5,474 2 | 7 590 | 0 | 0 |

DRAFT ECMA



Copyright International Organization for Standardization
Provided by IHS under license with ISO
No reproduction or networking permitted without license from IHS
Not for Resale

Table E.25 - Time-domain sequence for Symbol #47

| # | Real | Imag | # | Real | Imag | # | Real | Imag |
|---|---|---|---|---|---|---|---|---|
| 7 591 | -2,828 4 | 7,071 1 | 7 646 | 9,412 6 | -3,001 5 | 7 701 | 2,792 3 | 6,664 4 |
| 7 592 | 13,942 1 | 15,995 9 | 7 647 | -3,826 8 | -13,274 5 | 7 702 | -2,690 3 | 3,685 6 |
| 7 593 | -3,770 3 | 7,247 1 | 7 648 | 10,311 4 | 4,988 3 | 7 703 | -2,828 4 | -7,656 9 |
| 7 594 | -8,667 5 | 4,394 4 | 7 649 | 4,213 7 | 0,698 8 | 7 704 | 5,801 3 | -7,785 2 |
| 7 595 | 1,018 2 | -8,417 5 | 7 650 | -3,321 9 | -0,654 9 | 7 705 | -3,265 8 | -6,050 7 |
| 7 596 | -15,391 4 | -10,500 5 | 7 651 | -0,003 2 | -0,150 0 | 7 706 | -5,786 8 | -7,789 5 |
| 7 597 | -6,892 7 | -1,794 0 | 7 652 | -8,007 1 | -16,095 5 | 7 707 | 6,347 7 | -4,899 1 |
| 7 598 | 7,855 7 | -13,852 8 | 7 653 | 0,146 0 | -0,432 0 | 7 708 | 0,130 1 | 4,234 4 |
| 7 599 | 0,600 6 | 0,927 2 | 7 654 | -4,996 5 | -9,681 3 | 7 709 | 3,551 6 | 5,145 0 |
| 7 600 | -2,168 3 | -5,875 6 | 7 655 | -8,485 3 | 4,242 6 | 7 710 | -1,367 9 | -3,590 6 |
| 7 601 | 6,929 2 | -10,323 7 | 7 656 | -6,264 9 | 1,440 3 | 7 711 | 3,826 8 | -1,553 9 |
| 7 602 | 8,901 0 | 4,398 6 | 7 657 | 3,330 3 | -0,053 7 | 7 712 | 1,223 9 | -1,936 5 |
| 7 603 | -8,311 2 | -4,383 9 | 7 658 | -22,469 8 | 4,935 2 | 7 713 | -7,759 0 | 1,625 4 |
| 7 604 | -11,837 7 | -14,374 7 | 7 659 | -14,176 2 | -0,358 7 | 7 714 | -15,778 3 | -9,688 9 |
| 7 605 | 2,692 7 | -3,480 3 | 7 660 | 19,165 1 | 1,181 0 | 7 715 | 1,339 6 | -1,169 6 |
| 7 606 | 1,182 3 | -13,477 7 | 7 661 | -9,318 6 | 6,860 8 | 7 716 | -9,434 5 | 0,693 8 |
| 7 607 | -8,000 0 | -6,343 1 | 7 662 | -2,012 3 | 15,253 2 | 7 717 | -3,131 5 | -3,700 0 |
| 7 608 | 12,714 8 | -4,106 5 | 7 663 | 3,399 4 | 9,214 9 | 7 718 | 11,143 9 | 6,910 9 |
| 7 609 | -1,397 7 | 4,705 8 | 7 664 | -4,153 5 | -0,388 8 | 7 719 | 0 | 0 |
| 7 610 | 6,065 9 | 6,603 0 | 7 665 | 14,636 4 | -1,210 4 | 7 720 | 0 | 0 |
| 7 611 | -6,854 3 | -27,578 2 | 7 666 | 6,210 9 | -5,901 8 | 7 721 | 0 | 0 |
| 7 612 | -14,104 0 | -5,184 3 | 7 667 | -1,743 5 | -5,586 5 | 7 722 | 0 | 0 |
| 7 613 | 8,104 4 | -9,183 7 | 7 668 | -4,628 2 | -11,018 4 | 7 723 | 0 | 0 |
| 7 614 | 8,977 7 | 15,276 2 | 7 669 | 1,643 4 | 3,752 4 | 7 724 | 0 | 0 |
| 7 615 | 9,238 8 | -2,171 2 | 7 670 | -0,879 3 | 6,644 8 | 7 725 | 0 | 0 |
| 7 616 | 4,299 0 | 1,141 5 | 7 671 | 8,000 0 | 17,656 9 | 7 726 | 0 | 0 |
| 7 617 | 6,518 8 | 1,177 8 | 7 672 | -1,048 1 | -5,358 8 | 7 727 | 0 | 0 |
| 7 618 | -8,830 6 | -7,269 0 | 7 673 | 9,241 6 | -2,598 5 | 7 728 | 0 | 0 |
| 7 619 | 0,253 8 | 10,925 3 | 7 674 | -3,872 4 | 9,982 1 | 7 729 | 0 | 0 |
| 7 620 | 13,031 1 | 12,952 5 | 7 675 | -0,426 7 | -1,485 7 | 7 730 | 0 | 0 |
| 7 621 | 9,576 4 | 6,168 2 | 7 676 | 13,886 0 | 16,638 4 | 7 731 | 0 | 0 |
| 7 622 | -4,710 8 | -6,844 4 | 7 677 | -7,503 2 | -3,576 7 | 7 732 | 0 | 0 |
| 7 623 | -2,828 4 | 7,071 1 | 7 678 | -7,224 4 | 0,391 5 | 7 733 | 0 | 0 |
| 7 624 | -3,486 8 | 0,647 4 | 7 679 | -9,238 8 | 11,342 8 | 7 734 | 0 | 0 |
| 76 25 | -7,926 9 | 6,738 8 | 7 680 | 6,191 6 | 5,363 4 | 7 735 | 0 | 0 |
| 7 626 | -9,678 8 | -3,599 7 | 7 681 | 2,675 0 | -5,337 2 | 7 736 | 0 | 0 |
| 7 627 | -4,182 9 | -0,141 2 | 7 682 | -4,284 1 | 4,997 4 | 7 737 | 0 | 0 |
| 7 628 | 1,990 7 | -8,022 1 | 7 683 | -3,247 0 | 16,051 1 | 7 738 | 0 | 0 |
| 7 629 | 1,979 4 | 3,184 3 | 7 684 | 1,006 1 | 5,160 1 | 7 739 | 0 | 0 |



Copyright International Organization for Standardization
Provided by IHS under license with ISO
No reproduction or networking permitted without license from IHS
Not for Resale

Table E.25 - Time-domain sequence for Symbol #47 (concluded)

| | | | | | | | | |
|---|---|---|---|---|---|---|---|---|
| 7 630 | 1,387 0 | -10,543 2 | 7 685 | 13,230 7 | -5,139 5 | 7 740 | 0 | 0 |
| 7 631 | -9,074 0 | 13,849 0 | 7 686 | 4,980 1 | -6,789 1 | 7 741 | 0 | 0 |
| 7 632 | 2,842 5 | -5,627 2 | 7 687 | -2,828 4 | 4,242 6 | 7 742 | 0 | 0 |
| 7 633 | 24,599 7 | 1,349 0 | 7 688 | -0,463 3 | 5,520 2 | 7 743 | 0 | 0 |
| 7 634 | -1,949 9 | 12,112 8 | 7 689 | -9,934 4 | -4,705 9 | 7 744 | 0 | 0 |
| 7 635 | -2,915 8 | -3,086 3 | 7 690 | 1,180 3 | -4,362 5 | 7 745 | 0 | 0 |
| 7 636 | 14,100 4 | 4,527 1 | 7 691 | -0,315 9 | -7,366 9 | 7 746 | 0 | 0 |
| 7 637 | 8,363 6 | -11,833 2 | 7 692 | -0,394 6 | 9,453 7 | 7 747 | 0 | 0 |
| 7 638 | -9,795 6 | 15,221 6 | 7 693 | 2,662 5 | 8,366 2 | 7 748 | 0 | 0 |
| 7 639 | -2,828 4 | -3,656 9 | 7 694 | -1,889 5 | 4,396 9 | 7 749 | 0 | 0 |
| 7 640 | -4,334 0 | -2,023 7 | 7 695 | 5,074 0 | 4,293 2 | 7 750 | 0 | 0 |
| 7 641 | -14,963 1 | 2,717 1 | 7 696 | 19,219 6 | -1,994 6 | 7 751 | 0 | 0 |
| 7 642 | 11,585 8 | 0,289 5 | 7 697 | -0,500 2 | 4,020 3 | 7 752 | 0 | 0 |
| 7 643 | 7,276 4 | -6,321 3 | 7 698 | -3,931 1 | -8,446 7 | 7 753 | 0 | 0 |
| 7 644 | -5,638 6 | 2,651 9 | 7 699 | 3,313 6 | -1,286 4 | 7 754 | 0 | 0 |
| 7 645 | -5,269 7 | -1,001 9 | 7 700 | -3,246 1 | 7,702 6 | 7 755 | 0 | 0 |

DRAFT



Copyright International Organization for Standardization
Provided by IHS under license with ISO
No reproduction or networking permitted without license from IHS
Not for Resale

Table E.26 - Time-domain sequence for Symbol #48

| # | Real | Imag | # | Real | Imag | # | Real | Imag |
|---|---|---|---|---|---|---|---|---|
| 7 756 | -7,071 1 | 2,828 4 | 7 811 | 3,001 5 | -9,412 6 | 7 866 | -6,664 4 | -2,792 3 |
| 7 757 | -15,995 9 | -13,942 1 | 7 812 | 13,274 5 | 3,826 8 | 7 867 | -3,685 6 | 2,690 3 |
| 7 758 | -7,247 1 | 3,770 3 | 7 813 | -4,988 3 | -10,311 4 | 7 868 | 7,656 9 | 2,828 4 |
| 7 759 | -4,394 4 | 8,667 5 | 7 814 | -0,698 8 | -4,213 7 | 7 869 | 7,785 2 | -5,801 3 |
| 7 760 | 8,417 5 | -1,018 2 | 7 815 | 0,654 9 | 3,321 9 | 7 870 | 6,050 7 | 3,265 8 |
| 7 761 | 10,500 5 | 15,391 4 | 7 816 | 0,150 0 | 0,003 2 | 7 871 | 7,789 5 | 5,786 8 |
| 7 762 | 1,794 0 | 6,892 7 | 7 817 | 16,095 5 | 8,007 1 | 7 872 | 4,899 1 | -6,347 7 |
| 7 763 | 13,852 8 | -7,855 7 | 7 818 | 0,432 0 | -0,146 0 | 7 873 | -4,234 4 | -0,130 1 |
| 7 764 | -0,927 2 | -0,600 6 | 7 819 | 9,681 3 | 4,996 5 | 7 874 | -5,145 0 | -3,551 6 |
| 7 765 | 5,875 6 | 2,168 3 | 7 820 | -4,242 6 | 8,485 3 | 7 875 | 3,590 6 | 1,367 9 |
| 7 766 | 10,323 7 | -6,929 2 | 7 821 | -1,440 3 | 6,264 9 | 7 876 | 1,553 9 | -3,826 8 |
| 7 767 | -4,398 6 | -8,901 0 | 7 822 | 0,053 7 | -3,330 3 | 7 877 | 1,936 5 | -1,223 9 |
| 7 768 | 4,383 9 | 8,311 2 | 7 823 | -4,935 2 | 22,469 8 | 7 878 | -1,625 4 | 7,759 0 |
| 7 769 | 14,374 7 | 11,837 7 | 7 824 | 0,358 7 | 14,176 2 | 7 879 | 9,688 9 | 15,778 3 |
| 7 770 | 3,480 3 | -2,692 7 | 7 825 | -1,181 0 | -19,165 1 | 7 880 | 1,169 6 | -1,339 6 |
| 7 771 | 13,477 7 | -1,182 3 | 7 826 | -6,860 8 | 9,318 6 | 7 881 | -0,693 8 | 9,434 5 |
| 7 772 | 6,343 1 | 8,000 0 | 7 827 | -15,253 2 | 2,012 3 | 7 882 | 3,700 0 | 3,131 5 |
| 7 773 | 4,106 5 | -12,714 8 | 7 828 | -9,214 9 | -3,399 4 | 7 883 | -6,910 9 | -11,143 9 |
| 7 774 | -4,705 8 | 1,397 7 | 7 829 | 0,388 8 | 4,153 5 | 7 884 | 0 | 0 |
| 7 775 | -6,603 0 | -6,065 9 | 7 830 | 1,210 4 | -14,636 4 | 7 885 | 0 | 0 |
| 7 776 | 27,578 2 | 6,854 3 | 7 831 | 5,901 8 | -6,210 9 | 7 886 | 0 | 0 |
| 7 777 | 5,184 3 | 14,104 0 | 7 832 | 5,586 5 | 1,743 5 | 7 887 | 0 | 0 |
| 7 778 | 9,183 7 | -8,104 4 | 7 833 | 11,018 4 | 4,628 2 | 7 888 | 0 | 0 |
| 7 779 | -15,276 2 | -8,977 7 | 7 834 | -3,752 4 | -1,643 4 | 7 889 | 0 | 0 |
| 7 780 | 2,171 2 | -9,238 8 | 7 835 | -6,644 8 | 0,879 3 | 7 890 | 0 | 0 |
| 7 781 | -1,141 5 | -4,299 0 | 7 836 | -17,656 9 | -8,000 0 | 7 891 | 0 | 0 |
| 7 782 | -1,177 8 | -6,518 8 | 7 837 | 5,358 8 | 1,048 1 | 7 892 | 0 | 0 |
| 7 783 | 7,269 0 | 8,830 6 | 7 838 | 2,598 5 | -9,241 6 | 7 893 | 0 | 0 |
| 7 784 | -10,925 3 | -0,253 8 | 7 839 | -9,982 1 | 3,872 4 | 7 894 | 0 | 0 |
| 7 785 | -12,952 5 | -13,031 1 | 7 840 | 1,485 7 | 0,426 7 | 7 895 | 0 | 0 |
| 7 786 | -6,168 2 | -9,576 4 | 7 841 | -16,638 4 | -13,886 0 | 7 896 | 0 | 0 |
| 7 787 | 6,844 4 | 4,710 8 | 7 842 | 3,576 7 | 7,503 2 | 7 897 | 0 | 0 |
| 7 788 | -7,071 1 | 2,828 4 | 7 843 | -0,391 5 | 7,224 4 | 7 898 | 0 | 0 |
| 7 789 | -0,647 4 | 3,486 8 | 7 844 | -11,342 8 | 9,238 8 | 7 899 | 0 | 0 |
| 7 790 | -6,738 8 | 7,926 9 | 7 845 | -5,363 4 | -6,191 6 | 7 900 | 0 | 0 |
| 7 791 | 3,599 7 | 9,678 8 | 7 846 | 5,337 2 | -2,675 0 | 7 901 | 0 | 0 |
| 7 792 | 0,141 2 | 4,182 9 | 7 847 | -4,997 4 | 4,284 1 | 7 902 | 0 | 0 |
| 7 793 | 8,022 1 | -1,990 7 | 7 848 | -16,051 1 | 3,247 0 | 7 903 | 0 | 0 |
| 7 794 | -3,184 3 | -1,979 4 | 7 849 | -5,160 1 | -1,006 1 | 7 904 | 0 | 0 |



Copyright International Organization for Standardization
Provided by IHS under license with ISO
No reproduction or networking permitted without license from IHS
Not for Resale

Table E.26 - Time-domain sequence for Symbol #48 (concluded)

| | | | | | | | | |
|---|---|---|---|---|---|---|---|---|
| 7 795 | 10,543 2 | -1,387 0 | 7 850 | 5,139 5 | -13,230 7 | 7 905 | 0 | 0 |
| 7 796 | -13,849 0 | 9,074 0 | 7 851 | 6,789 1 | -4,980 1 | 7 906 | 0 | 0 |
| 7 797 | 5,627 2 | -2,842 5 | 7 852 | -4,242 6 | 2,828 4 | 7 907 | 0 | 0 |
| 7 798 | -1,349 0 | -24,599 7 | 7 853 | -5,520 2 | 0,463 3 | 7 908 | 0 | 0 |
| 7 799 | -12,112 8 | 1,949 9 | 7 854 | 4,705 9 | 9,934 4 | 7 909 | 0 | 0 |
| 7 800 | 3,086 3 | 2,915 8 | 7 855 | 4,362 5 | -1,180 3 | 7 910 | 0 | 0 |
| 7 801 | -4,527 1 | -14,100 4 | 7 856 | 7,366 9 | 0,315 9 | 7 911 | 0 | 0 |
| 7 802 | 11,833 2 | -8,363 6 | 7 857 | -9,453 7 | 0,394 6 | 7 912 | 0 | 0 |
| 7 803 | -15,221 6 | 9,795 6 | 7 858 | -8,366 2 | -2,662 5 | 7 913 | 0 | 0 |
| 7 804 | 3,656 9 | 2,828 4 | 7 859 | -4,396 9 | 1,889 5 | 7 914 | 0 | 0 |
| 7 805 | 2,023 7 | 4,334 0 | 7 860 | -4,293 2 | -5,074 0 | 7 915 | 0 | 0 |
| 7 806 | -2,717 1 | 14,963 1 | 7 861 | 1,994 6 | -19,219 6 | 7 916 | 0 | 0 |
| 7 807 | -0,289 5 | -11,585 8 | 7 862 | -4,020 3 | 0,500 2 | 7 917 | 0 | 0 |
| 7 808 | 6,321 3 | -7,276 4 | 7 863 | 8,446 7 | 3,931 1 | 7 918 | 0 | 0 |
| 7 809 | -2,651 9 | 5,638 6 | 7 864 | 1,286 4 | -3,313 6 | 7 919 | 0 | 0 |
| 7 810 | 1,001 9 | 5,269 7 | 7 865 | -7,702 6 | 3,246 1 | 7 920 | 0 | 0 |

DRAFT ECMA



Copyright International Organization for Standardization
Provided by IHS under license with ISO
No reproduction or networking permitted without license from IHS
Not for Resale

DRAFT 2009



Copyright International Organization for Standardization
Provided by IHS under license with ISO
No reproduction or networking permitted without license from IHS
Not for Resale

# Annex F
## (informative)

# Recommended out-of-band emission limits

Table F.1 defines recommended out-of-band emission limits when close proximity between UWB devices and cellular and GPS downlink devices is required. The emission limits are specified for average power and exclude possible narrowband spectrum spikes or spurs. The following parameters were assumed in the derivation of the limits recommended in this Clause:

1. Device separation of 60 cm.
2. Noise figure of 7 dB for cellular and 3,5 dB for GPS, respectively.
3. Allowed noise increase of 1 dB for cellular and 0,5 dB for GPS, respectively.
4. Victim antenna gain of –3 dBi.
5. Free space path loss model ($f$ equals to lower limit of the victim receiver band).

Table F.1 - Recommended out-of-band emission limits

| Frequency Band (MHz) | Recommended Emission Limits (dBm/MHz) |
|---|---|
| 869 - 894 | -83,3 |
| 925 - 960 | -82,5 |
| 1 570 - 1 581 | -84,7 |
| 1 805 - 1 880 | -76,8 |
| 1 930 - 1 990 | -76,2 |
| 2 110 - 2 170 | -75,4 |

DRAFT 2009



Copyright International Organization for Standardization
Provided by IHS under license with ISO
No reproduction or networking permitted without license from IHS
Not for Resale

DRAFT 2009



Copyright International Organization for Standardization
Provided by IHS under license with ISO
No reproduction or networking permitted without license from IHS
Not for Resale

# Annex G
(informative)

# Range measurement calculations

The MAC sublayer and the PHY layer can do two-way time transfer range measurement with remote devices. These measurements result in timing data, which needs further processing. This Annex describes two calculations that may be performed:

- Distance calculation
- Distance uncertainty

These calculations are shown assuming a 4 224 MHz clock.

## G.1 Calculate distance for a single measurement

The MAC entity reports four values per measurement:

- T1c = corrected RM1 send time
- R1c = corrected RM1 receive time
- T2c = corrected RM2 send time
- R2c = corrected RM2 receive time

These are 32-bit numbers, in units of 4 224 MHz clock periods.

T1c and R2c are measured from the same timer in the local DEV1.

R1c and T2c are measured from the same timer in the remote DEV2.

The round trip delay is T1c-R2c. The delay through DEV2 is R1c-T2c.

Subtracting the DEV2 delay from the round trip delay yields two flight times.

Therefore: Flight Time = ½((R2c-T1c)-(T2c-R1c)) in units of 4 224 MHz cycles.

The distance = Flight Time x (c / 4 224 MHz), where c = speed of light.

c / 4 224 MHz = 70,975 4 mm, ~71mm.

## G.2 Calculate distance uncertainty

There are several sources of uncertainty or error in range time measurements:

- Noise
- Multipath effects
- Calibration delay constant accuracy (pRangingTtransmitDelay & pRangingReceiveDelay)
- Calibration delay constant precision



Copyright International Organization for Standardization
Provided by IHS under license with ISO
No reproduction or networking permitted without license from IHS
Not for Resale

- Timer clock resolution
- Timer clock accuracy
- Timer clock differences between the two devices
- Relative motion

### G.2.1 Noise effects

The most likely effects of noise are twofold:

- Cause bit errors that prevent the intact deliver of ranging measurement frames RM1 or RM2 (the ACK for RM1).
- Cause variance in the accuracy of the receiving PHYs' detection of the ranging reference signal.

If frames are not delivered, there will be incomplete sets of range measurement data.

If there are multiple measurements, the DME can use intact measurements to interpolate which measurements are missing, and discard the corresponding data. For example, if an RM2 frame was not received intact, there will be a missing R2c value.

Noise can cause jitter in the detection of timing references. This jitter will be reported in multiples of the receiving PHYs' timing clock. For example, if noise causes a timing reference to be detected one clock early, and the timer is running at 1 056 MHz (an optional value), that will result in a 14,2 cm error; 1 056 MHz = ¼ of 4 224 MHz, and the error is halved in the 1 distance calculation.

The DME can attempt to improve distance measurement accuracy in the presence of noise by making repeated measurements and averaging the results.

### G.2.2 Multipath effects

The line-of-sight signal will be the first to arrive, yielding the correct range. However, signals will bounce, and non-line-of-sight signals may exceed the amplitude of the line-of-sight signal.

To avoid detecting multiple peaks, the PHY should employ some means to respond to the first peak, and ignore others shortly after.

If the PHY responds first to a non-line-of-sight signal, that signal will have taken a longer flight path, and will therefore take longer to arrive. The perceived flight time will be longer, and the computed distance will track. Therefore, in the presence of multipath, the calculated range distance measurements will be upper bounds on the true distance.

### G.2.3 Calibration delay constant accuracy & precision

The delays in the PHY are defined as:

pRangingTransmitDelay = the time from the generation of the reference signal, which triggers the RTIMER capture (e.g. T1 or T2), to the time this signal reaches the device antenna. T1c = T1 + pRangingTransmitDelay.

pRangingReceiveDelay = the time from the arrival of the reference signal at the antenna to the time this signal is first detected in the PHY, triggering the RTIMER clock capture (e.g. R1 or R2). R1c = R1 - pRangingReceiveDelay.

These constants are 16-bit unsigned integer values, in units of 4 224 MHz clock periods.

There are pairs of these constants for each PHY. Therefore, each of these four constants can contribute two errors:

- Inaccuracy, as specified by the manufacturer
- Quantization error (in the order of one 4 224 MHz cycle, 237 psec)



Copyright International Organization for Standardization
Provided by IHS under license with ISO
No reproduction or networking permitted without license from IHS
Not for Resale

*NOTE*
*The delays may only be accurately measured and characterized from inside the PHY DSP to the chip leads. The delays from the chip pins to the antenna may vary by a small amount, depending on trace or cable lengths. These external transmission delays may have to be estimated.*

Since each delay is uncorrelated with the others, the expected quantization error is the RMS sum of four +/- half bit errors.

### G.2.4 Timer clock resolution

The distance measure is limited by the resolution of the timers used for measuring time of flight. The implemented clock resolution generates simple quantization errors.

The PHY specification allows options in the PHY ranging timer resolution:

- 528 MHz, 56,8 cm, minimum if ranging is implemented
- 1 056 MHz, 28,4 cm, optional
- 2 112 MHz, 14,2 cm, optional
- 4 224 MHz, 7,1 cm, maximum option

The local PHY reports these options to the MAC via a PLME static parameter. The DME can query these via the PLME-GET.request primitive.

The remote PHY reports this same RangingSupported static parameter to the remote MAC sublayer, which delivers it to the local MAC sublayer by the RMR frame. The local MAC sublayer in turn reports this value to the DME via the MLME-RANGE-MEASUREMENT.confirm primitive.

Therefore, either PHY can contribute quantization error. The expected value for either contribution is half of the quantization distance (e.g. 3,6 – 28,4 cm). The expected value for the combination of these errors is the RMS sum of the two contributions (e.g. 5 – 40 cm), since the clocks are not synchronized and therefore uncorrelated.

### G.2.5 Timer clock accuracy

The PHY specification requires that the clock frequency must be within 20 ppm. Without correction, deviation by either clock generates time measurement errors. These errors are proportionate to two factors:

- The extent of inaccuracy (for each PHY clock)
- The time taken to perform each two-way time transfer measurement

The local PHY reports the manufacturer-specified timer clock tolerance to the MAC via a PLME static parameter. The units are in ppm (parts per million). The DME can query this via the PLME-GET.request primitive.

The remote PHY reports this same pClockAccuracy static parameter to the remote MAC sublayer, which delivers it to the local MAC sublayer by the RMR frame. The local MAC sublayer in turn reports this value to the DME via the MLME-RANGE-MEASUREMENT.confirm primitive. These values do not report the actual clock frequency errors; they report tolerances.

Each timer clock inaccuracy contributes error accumulated over the time it runs. The DEV1 clock should run approximately 23,4 s + one flight time; the DEV2 clock should run approximately 23,4 s – one flight time. 23,4 s = 1 preamble (10,0) + frame (~3,4) + SIFS (10,0).

23,4 s = 98 841 cycles of 4 224 MHz. 20 ppm of 98 841 is approximately two clock cycles. Therefore, either PHY clock can generate errors of +/- 2 clocks; the maximum error could be just under 4 clock cycles. Because these effects are halved in the distance calculation, the maximum possible error would be 14 cm (28/2) if the clocks both err in the same direction.



Copyright International Organization for Standardization
Provided by IHS under license with ISO
No reproduction or networking permitted without license from IHS
Not for Resale

The expected value of this error depends on the actual statistics of the crystals commonly used in these devices. If the clock errors are randomly distributed, it will be lower (Gaussian around zero) because positive and negative errors offset.

### G.2.6 Clock frequency differences

If the two PHY clocks are offset in the same direction, the errors will add, as described above. If they are in the opposite directions, they will cancel; the calculated result will be the same as that resulting from both clocks having the same offset as the average of their offsets.

It is possible using repeated measurements to detect and correct for differences between the local and the remote clock frequencies. However, the local DEV1 has no way of knowing whether its own clock or the remote clock is actually more accurate. (It only has the tolerances.) This operation would be useful only if the local clock is very tight (e.g. 5 ppm) and the remote clock is very loose (e.g. 40 ppm).

### G.2.7 Clock frequency detection

If the local device wants to normalize measurements to its own clock, it can detect and correct for frequency offset differences between its local clock and the remote clock.

Detection of the clock frequency offset between the local clock and remote clock can be simple if there is little noise induced jitter. Consider the case of executing a set of N consecutive ranging measurements (e.g. MLME-RANGE-MEASUREMENT.request(DestAddr, N) ). The MAC sublayer will return N sets of timer values using MLME-RANGE-MEASUREMENT.confirm. Assuming the clock error is constant, that clock error (in 4 224 MHz cycles) can be approximated by:

[(Nth T1c)-(1st T1c)] – [(Nth R1c)-(1st R1c)]

or

[(Nth T2c)-(1st T2c)] – [(Nth R2c)-(1st R2c)]

Working backwards, the relative error in any one measurement would be:

([(Nth T1c)-(1st T1c)] – [(Nth R1c)-(1st R1c)])/(2(N-1)).

For example, if N = 4, [(4th T1c)-(1st T1c)] should be approximately 2(4-1) x 23,4 s = 140,4 s, or 593 050  4 224 MHz clock periods. If the remote clock differs by 20 ppm, the cumulative error over 4 consecutive measurements would be approximately +/- 24 clock periods or 4 clocks per measurement, +/- 28,4 cm.

If noise induced jitter is large, the repeated measurements might need to be processed to fit straight lines through the timing data, then process as shown in the previous paragraph.

### G.2.8 Motion effects

If motion were to effect a single two-way time transfer measurement as described in this standard, the relative motion of the two devices would need to meet or exceed a clock wavelength in the measurement time of 23,4 s. Using the most precise clock, 4 224 MHz, the relative motion would have to be (71 mm / 23,4 s) = (71 km / 23,4 s) ~ 3,0 km/s ~ Mach 10! Therefore, for practical purposes, relative motion will have no measurable effect.

DRAFT



Copyright International Organization for Standardization
Provided by IHS under license with ISO
No reproduction or networking permitted without license from IHS
Not for Resale

# Annex H
## (informative)

# Bibliography

[H1] "Guidelines for use of a 48-bit Extended Unique Identifier (EUI-48™)",
*http://standards.ieee.org/regauth/oui/tutorials/EUI48.html*

[H2] IEEE STD 802.3 -2005 IEEE Standard for Information technology - Telecommunications and information exchange between systems- Local and metropolitan area networks- Part 3: Carrier sense multiple access with collision detection (CSMA/CD) access method and physical layer specifications.

[H3] ISO/IEC 7498-1:1994, Information Technology-Open Systems Interconnection-Basic Reference Model: The Basic Model.

[H4] IETF RFC 4086, Randomness Requirements for Security, June 2005

[H5] IETF RFC 3610, Counter with CBC-MAC (CCM), September 2003

DRAFT 2009



Copyright International Organization for Standardization
Provided by IHS under license with ISO
No reproduction or networking permitted without license from IHS
Not for Resale