INTERNATIONAL STANDARD

ISO/IEC 9661

Second edition
1994-12-15

Information technology — Data interchange on 12,7 mm wide magnetic tape cartridges — 18 tracks, 1 491 data bytes per millimetre

Technologies de l'information — Échange de données sur cartouches de bande magnétique de 12,7 mm *de large — 18 pistes, 1 491 caractères par millimètre*



Reference number
ISO/IEC 9661:1994(E)

--`,,```,,,,````-`-`,,`,,`,`,,`---

Copyright International Organization for Standardization
Provided by IHS under license with ISO
No reproduction or networking permitted without license from IHS

Not for Resale

Contents

		Page
Section 1 - General		**1**
1	**Scope**	**1**
2	**Conformance**	**1**
3	**Normative references**	**1**
4	**Definitions**	**1**
4.1	Average signal amplitude	**1**
4.2	Back surface	**1**
4.3	Beginning of Tape (BOT)	**1**
4.4	Byte	**1**
4.5	Cartridge	**1**
4.6	Cyclic Redundancy Check character	**1**
4.7	Data density	**1**
4.8	Error Correcting Code	**1**
4.9	Flux transition position	**1**
4.10	Flux transition spacing	**2**
4.11	Magnetic tape	**2**
4.12	Master Standard Reference Tape	**2**
4.13	Physical recording density	**2**
4.14	Postamble	**2**
4.15	Preamble	**2**
4.16	Reference field	**2**
4.17	Secondary Standard Reference Tape	**2**
4.18	Standard reference amplitude	**2**
4.19	Standard reference current	**2**
4.20	Test recording current	**2**
4.21	Track	**2**
4.22	Typical field	**2**
5	**Environment and safety**	**2**
5.1	Cartridge/Tape testing environment	**2**
5.2	Cartridge operation environment	**2**
5.3	Cartridge storage environment	**3**
5.4	Safety requirements	**3**

© ISO/IEC 1994
All rights reserved. No part of this publication may be reproduced or utilized in any form or by any means, electronic or mechanical, including photocopying and microfilm, without permission in writing from the publisher
ISO/IEC Copyright Office * Case Postale 56 * CH-1211 Genève 20 * Switzerland
Printed in Switzerland

Copyright International Organization for Standardization
Provided by IHS under license with ISO
No reproduction or networking permitted without license from IHS
Not for Resale

5.4.1	Safety	3
5.4.2	Flammability	3
5.5	Transportation	3
Section 2 - Tape requirements		3
6	**Characteristics of the tape**	3
6.1	Material	3
6.2	Tape length	3
6.3	Tape width	3
6.4	Tape discontinuity	3
6.5	Total thickness of tape	3
6.6	Base material thickness	3
6.7	Longitudinal curvature	3
6.8	Out-of-plane distortions	4
6.9	Cupping	4
6.10	Dynamic frictional characteristics	4
6.10.1	Frictional drag between the recording surface and the tape back surface	4
6.10.2	Frictional drag between the tape recording surface and ferrite after environmental cycling	4
6.11	Coating adhesion	5
6.12	Flexural rigidity	6
6.13	Electrical resistance of coated surfaces	6
6.14	Tape durability	7
6.15	Inhibitor tape	7
6.16	Tape abrasivity	7
6.17	Pre-recording condition	7
6.18	Magnetic recording characteristics	8
6.18.1	Typical field	8
6.18.2	Signal amplitude	8
6.18.3	Resolution	8
6.18.4	Overwrite	8
6.18.5	Narrow-Band Signal-to-Noise Ratio (NB-SNR)	9
6.19	Tape quality	9
6.19.1	Missing pulses	10
6.19.2	Missing pulse zones	10
6.19.3	Coincident missing pulse zones	10
Section 3 - Cartridge requirements		10
7	**Dimensional and mechanical characteristics of the cartridge**	10
7.1	Overall dimensions (figures 4 to 6)	11
7.2	Write-inhibit mechanism (figures 4 and 5)	11
7.3	Label area of the rear side (figures 5 and 6)	11
7.4	Label area of the top side (figure 5)	12
7.5	Case opening (figures 4, 5, 7 and 9)	12
7.6	Locating notches (figures 7, 8 and 10)	12
7.7	Locating areas (figure 7)	13
7.8	Inside configuration of the case around the case opening (figures 7 and 11)	13
7.9	Other external dimensions of the case (figure 8)	13
7.10	Central window (figure 7)	13
7.11	Stacking ribs	13
7.12	Flexibility of the case	14
7.12.1	Requirements	14

Copyright International Organization for Standardization
Provided by IHS under license with ISO
No reproduction or networking permitted without license from IHS
Not for Resale

7.12.2	Procedure	14
7.13	Tape reel (figures 12 and 13)	14
7.13.1	Locking mechanism (figure 13)	14
7.13.2	Axis of rotation of the reel	15
7.13.3	Metallic insert	15
7.13.4	Toothed rim	15
7.13.5	Hub of the reel	15
7.13.6	Relative positions	15
7.13.7	Characteristics of the toothed rim (figure 12)	16
7.14	Leader block (figure 15)	16
7.15	Attachment of the tape to the leader block (figure 16)	17
7.16	Latching mechanism (figure 17)	17
7.17	Tape wind	18
7.18	Wind tension	18
7.19	Circumference of the tape reel	18
7.20	Moment of inertia	18
Section 4 - Recording requirements		25
8	**Method of recording**	25
8.1	Physical recording density	25
8.2	Bit cell length	25
8.3	Average bit cell length	25
8.4	Long-term average bit cell length	25
8.5	Short-term average bit cell length	25
8.6	Rate of change	25
8.7	Bit shift	25
8.8	Total character skew	25
8.9	Read signal amplitude	26
8.10	Coincident missing pulses	26
9	**Track format**	26
9.1	Number of tracks	26
9.2	Reference edge	26
9.3	Track positions	26
9.4	Track width	26
9.5	Azimuth	26
10	**Data format**	26
10.1	Types of bytes	27
10.1.1	Data bytes	27
10.1.2	Pad bytes	28
10.2	Frame	28
10.3	Data Block	29
10.3.1	Prefix	29
10.3.2	Data Frames	29
10.3.3	Residual Frame 1	30
10.3.4	Residual Frame 2	31
10.3.5	Summary of requirements for Residual Frames	32
10.3.6	Suffix	33
10.4	Error Correcting Code (ECC)	33
10.4.1	Diagonal Redundancy Check (DRC)	33

Copyright International Organization for Standardization
Provided by IHS under license with ISO
No reproduction or networking permitted without license from IHS
Not for Resale

10.4.2 Vertical Redundancy Check (VRC) **34**
10.4.3 ECC Format **34**
10.4.4 Summary of ECC **35**

10.5 Recording of 8-bit bytes on the tape **36**
10.6 Recorded Data Block **36**

10.6.1 Preamble **36**
10.6.2 Beginning of Data Mark (BDM) **36**
10.6.3 Resync Control Frame **36**
10.6.4 End of Data Mark (EDM) **36**
10.6.5 Postamble **36**

10.7 Data density **36**

11 **Tape format** **37**

11.1 Density Identification Burst **37**
11.2 ID Separator Burst **38**
11.3 Interblock Gaps **38**
11.4 Erase Gaps **38**

11.4.1 Normal Erase Gaps **38**
11.4.2 Elongated Erase Gaps **38**

11.5 Tape Marks **38**
11.6 Relationship between Interblock Gaps, Erase Gaps and Tape Marks **39**

11.6.1 Interblock Gap followed by a Tape Mark **39**
11.6.2 Tape Mark followed by an Interblock Gap **39**
11.6.3 Interblock Gap followed by an Erase Gap **39**
11.6.4 Erase Gap followed by an Interblock Gap **39**
11.6.5 Summary of the relationship between Interblock Gaps, Erase Gaps and Tape Marks **40**

11.7 First and last recording on the tape **40**
11.8 Summary of the tape format **41**

11.8.1 Characteristics of recording other than recorded Data Blocks **41**
11.8.2 Arrangement of recording on the tape **41**

Annexes

A - Recommendations for transportation **42**

B - Inhibitor tape **43**

C - Tape abrasivity measurement procedure **44**

D - Recommendations on tape durability **47**

E - Pre-recording condition **48**

F - Representation of 8-bit bytes by 9-bit patterns **49**

G - Measurement of bit shift **52**

H - Dimensions of the cartridge **54**

Copyright International Organization for Standardization
Provided by IHS under license with ISO
No reproduction or networking permitted without license from IHS
Not for Resale

Foreword

ISO (the International Organization for Standardization) and IEC (the International Electrotechnical Commission) form the specialized system for worldwide standardization. National bodies that are members of ISO or IEC participate in the development of International Standards through technical committees established by the respective organization to deal with particular fields of technical activity. ISO and IEC technical committees collaborate in fields of mutual interest. Other international organizations, governmental and non-governmental, in liaison with ISO and IEC, also take part in the work.

In the field of information technology, ISO and IEC have established a joint technical committee, ISO/IEC JTC 1. Draft International Standards adopted by the joint technical committee are circulated to national bodies for voting. Publication as an International Standard requires approval by at least 75 % of the national bodies casting a vote.

International Standard ISO/IEC 9661 was prepared by Joint Technical Committee ISO/IEC JTC 1, *Information technology*, Subcommittee SC 11, *Flexible magnetic media for digital data interchange*.

This second edition cancels and replaces the first edition (ISO 9661:1988).

Annexes C, E, F and G form an integral part of this International Standard. Annexes A, B, D and H are for information only.

Copyright International Organization for Standardization
Provided by IHS under license with ISO
No reproduction or networking permitted without license from IHS
Not for Resale

Information technology - Data interchange on 12,7 mm wide magnetic tape cartridges - 18 tracks, 1 491 data bytes per millimetre

Section 1 - General

1 Scope

This International Standard specifies the physical and magnetic characteristics of a 12,7 mm wide, 18-track magnetic tape cartridge to enable interchangeability of such cartridges. It also specifies the quality of the recorded signals, the format and recording method thus allowing, together with ISO 1001 for magnetic tape labelling, full data interchange by means of such magnetic tape cartridges.

2 Conformance

A magnetic tape cartridge shall be in conformance with this International Standard if it meets all mandatory requirements specified herein. The tape requirements shall be satisfied throughout the extent of the tape.

3 Normative references

The following standards contain provisions which, through reference in this text, constitute provisions of this International Standard. At the time of publication, the editions indicated were valid. All standards are subject to revision, and parties to agreements based on this International Standard are encouraged to investigate the possibility of applying the most recent editions of the standards listed below. Members of IEC and ISO maintain registers of currently valid International Standards.

ISO/IEC 646:1991, *Information technology — ISO 7-bit coded character set for information interchange.*

ISO 683-13:1986, *Heat-treatable steels, alloy steels and free-cutting steels — Part 13: Wrought stainless steels.*

ISO 1001:1986, *Information processing — File structure and labelling of magnetic tapes for information interchange.*

ISO 1302:1992, *Technical drawings — Method of indicating surface texture.*

ISO/IEC 2022:1994, *Information technology — Character code structure and extension techniques.*

ISO/IEC 4873:1991, *Information technology — ISO 8-bit code for information interchange — Structure and rules for implementation.*

4 Definitions

For the purposes of this International Standard, the following definitions apply.

4.1 Average signal amplitude: The average peak-to-peak value of the signal output of the read head measured over a minimum of 25,4 mm of tape exclusive of missing pulses.

4.2 Back surface: The surface of the tape opposite the magnetic coating used to record data.

4.3 Beginning of Tape (BOT): The point along the length of the magnetic tape indicated by the start of the Density Identification Burst.

4.4 Byte: An ordered set of eight bits acted upon as a unit and recorded as a 9-bit pattern.

4.5 Cartridge: A container holding a supply reel of magnetic tape with an attached leader block.

4.6 Cyclic Redundancy Check character: A character represented by two bytes, placed at the end of a Data Block and used for error detection.

4.7 Data density: The number of 8-bit bytes stored per unit length of tape, expressed in bytes per millimetre.

4.8 Error Correcting Code: A mathematical procedure yielding bits used for the detection and correction of errors.

Copyright International Organization for Standardization
Provided by IHS under license with ISO
No reproduction or networking permitted without license from IHS Not for Resale

4.9 Flux transition position: That point which exhibits maximum free-space flux density normal to the tape surface.

4.10 Flux transition spacing: The distance along a track between successive flux transitions.

4.11 Magnetic tape: A tape which will accept and retain the magnetic signals intended for input, output and storage purposes on computers and associated equipment.

4.12 Master Standard Reference Tape: A tape selected as the standard for reference field, signal amplitude, resolution and overwrite.

Note - A Master Standard Reference Tape has been established at the National Institute for Standards and Technology (NIST) for this International Standard.

4.13 Physical recording density: The number of recorded flux transitions per unit length of track, expressed in flux transitions per millimetre (ftpmm).

4.14 Postamble: A repeated 9-bit pattern at the end of a recorded Data Block providing electronic synchronization when reading in the reverse direction.

4.15 Preamble: A repeated 9-bit pattern at the beginning of a recorded Data Block providing electronic synchronization when reading in the forward direction.

4.16 Reference field: The typical field of the Master Standard Reference Tape.

4.17 Secondary Standard Reference Tape: A tape the performance of which is known and stated in relation to that of the Master Standard Reference Tape.

Note - Secondary Standard Reference Tapes have been developed at the National Institute for Standards and Technology (NIST) and are available from the NIST Office of Standard Reference Materials, Room 205, Building 202, National Institute of Standards and Technology, Gaithersburg, MA 20899, USA, under reference number SRM 3202, until January 2004.
It is intended that these be used for calibrating tertiary reference tapes for use in routine calibration.

4.18 Standard reference amplitude: The average signal amplitude from the Master Standard Reference Tape when it is recorded with the test recording current on the NIST measurement system at 972 ftpmm.

Traceability to the standard reference amplitude is provided by the calibration factors supplied with each Secondary Standard Reference Tape.

4.19 Standard reference current: The current that produces the reference field.

4.20 Test recording current: The current that is 1,5 times the standard reference current.

4.21 Track: A longitudinal area on the tape along which a series of magnetic signals may be recorded.

4.22 Typical field: In the plot of the average signal amplitude against the recording field at the physical recording density of 972 ftpmm, the minimum field that causes an average signal amplitude equal to 85 % of the maximum average signal amplitude.

5 Environment and safety

Unless otherwise stated, the conditions specified below refer to the ambient conditions in the test or computer room and not to those within the tape equipment.

5.1 Cartridge/Tape testing environment

Unless otherwise stated, tests and measurements made on the tape cartridge to check requirements of this International Standard shall be carried out under the following conditions:

temperature:	23 °C ± 2 °C
relative humidity:	40 % to 60 %
conditioning period before testing:	24 hours.

5.2 Cartridge operation environment

Cartridges used for data interchange shall be capable of operating under the following conditions:

temperature:	16 °C to 32 °C
relative humidity:	20 % to 80 %

Copyright International Organization for Standardization
Provided by IHS under license with ISO
No reproduction or networking permitted without license from IHS
Not for Resale

wet bulb temperature: 25 °C max.

The average temperature of the air immediately surrounding the tape shall not exceed 40,5 °C.

Note - Localized tape temperatures in excess of 49 °C may cause tape damage.

Conditioning before operating: If a cartridge has been exposed during storage and/or transportation to conditions outside the above values, it shall be conditioned for a period of at least 24 hours.

5.3 Cartridge storage environment

Cartridges used for data interchange shall be stored under the following conditions.

temperature: 5 °C to 32 °C
relative humidity: 5 % to 80 %
wet bulb temperature: 26 °C max.

5.4 Safety requirements

5.4.1 Safety

The cartridge and its components shall not constitute any safety or health hazard when used in its intended manner or in any foreseeable misuse in an information processing system.

5.4.2 Flammability

The cartridge and its components shall be made from materials which, if ignited from a match flame, do not continue to burn in a still carbon dioxide atmosphere.

5.5 Transportation

This International Standard does not specify parameters for the environment in which cartridges should be transported. Annex A gives some recommendations for transportation.

Section 2 - Tape requirements

6 Characteristics of the tape

6.1 Material

The tape shall consist of a base material (oriented polyethylene terephthalate film or its equivalent) coated on one side with a strong, yet flexible layer of ferromagnetic material dispersed in a suitable binder. The back surface of the tape may also be coated with a ferromagnetic or non-ferromagnetic material.

6.2 Tape length

The length of the tape shall not be less than 165 m.

6.3 Tape width

The width of the tape shall be 12,650 mm ± 0,025 mm. The width shall be measured across the tape from edge-to-edge when the tape is under a tension of less than 0,28 N.

6.4 Tape discontinuity

There shall be no discontinuities in the tape such as those produced by tape splicing or perforations.

6.5 Total thickness of tape

The total thickness of the tape at any point shall be between 0,0259 mm and 0,0337 mm.

6.6 Base material thickness

The thickness of the base material shall be 0,0234 mm nominal.

6.7 Longitudinal curvature

The radius of curvature of the edge of the tape shall not be less than 33 m.

Copyright International Organization for Standardization
Provided by IHS under license with ISO
No reproduction or networking permitted without license from IHS
Not for Resale

Procedure

Allow a length of tape of 1 m to unroll and assume its natural curvature on a flat smooth surface. Measure the deviation from a 1 m chord. The deviation shall not be greater than 3,8 mm. This deviation corresponds to the minimum radius of curvature of 33 m if measured over an arc of circle.

6.8 Out-of-plane distortions

All visual evidence of out-of-plane distortion shall be removed when the tape is subjected to a uniform tension of 0,6 N. Out-of-plane distortions are local deformations which cause portions of the tape to deviate from the plane of the surface of the tape. Out-of-plane distortions are most readily observed when the tape is lying on a flat surface under no tension.

6.9 Cupping

The departure across the width of tape from a flat surface shall not exceed 0,3 mm.

Procedure

Cut a length of tape of 1,0 m ± 0,1 m . Condition it for a minimum of 3 hours in the test environment by hanging it so that the coated surface is freely exposed to the test environment. From the centre portion of the conditioned tape cut a test piece of length 25 mm. Stand the test piece on its end in a cylinder which is at least 25 mm high with an inside diameter of 13,0 mm ± 0,2 mm. With the cylinder standing on an optical comparator measure the cupping by aligning the edges of the sample to the reticle and determining the distance from the aligned edges to the corresponding surface of the test piece at its centre.

6.10 Dynamic frictional characteristics

In the tests of 6.10.1 and 6.10.2 the specified forces of 1,0 N and 1,50 N, respectively, comprise both the force component of the dynamic friction and the force of 0,64 N applied to the test piece of tape.

NOTE - Particular attention should be given to keeping the surfaces clean.

6.10.1 Frictional drag between the recording surface and the tape back surface

The force required to move the recording surface in relation to the back surface shall not be less than 1,0 N.

Procedure

i) Wrap a test piece of tape around a 25,4 mm diameter circular mandrel with the back surface of the test piece facing outward.

ii) Place a second test piece of tape, with the recording surface facing in, around the first test piece for a total angle of wrap of 90°.

iii) Apply a force of 0,64 N to one end of the outer test piece of tape. Secure its other end to a force gauge which is mounted on a motorized linear slide.

iv) Drive the slide at a speed of 1 mm/s.

6.10.2 Frictional drag between the tape recording surface and ferrite after environmental cycling

The force required to move the tape at a point 1,34 m from the leader block of the cartridge shall not be greater than 1,50 N. The force required at a point 4,3 m from the junction of the tape with the cartridge hub shall not exceed the first force by more than a factor of 4.

Procedure

i) Wind tape on to a spool hub of diameter 50 mm to an outside diameter of 97 mm with a winding tension of 2,2 N ± 0,2 N.

ii) Repeat the following two steps five times:

   a) Store for 48 hours at a temperature of 50 °C and a relative humidity of 10 % to 20 %.

   b) Acclimatize in the testing environment for 2 hours and rewind with a tension of 2,2 N ± 0,2 N.

iii) Condition the tape for 48 hours at a temperature of 30,5 °C and a relative humidity of 85 %. The tape shall remain in this environment for steps iv) and v).

Copyright International Organization for Standardization
Provided by IHS under license with ISO
No reproduction or networking permitted without license from IHS
Not for Resale

iv) Apply a force of 0,64 N to one end of a test piece of tape of not more than 1 m, taken 1,34 m from the leader block. Pass the test piece over a ferrite rod of diameter 25,4 mm with the recording surface in contact with the rod for a total angle of wrap of 90°.

The rod shall be made from the ferrite specified in annex C. It shall be polished to a roughness value r_a of 0,05 µm (roughness grade N2, ISO 1302). Pull the other end of the test piece horizontally at 1 mm/s.

v) Repeat step iv) for a similar test piece taken 4,3 m from the junction of the tape with the cartridge hub.

6.11 Coating adhesion

The force required to peel any part of the coating from the tape base material shall not be less than 1,5 N.

Procedure

i) Take a test piece of the tape approximately 380 mm long and scribe a line through the recording coating across the width of the tape 125 mm from one end.

ii) Using a double-sided pressure sensitive tape, attach the full width of the test piece to a smooth metal piece plate, with the recording surface facing the plate, as shown in the figure below.

iii) Fold the test piece over 180°, attach the metal plate and the free end of the test piece to the jaws of a universal testing machine and set the speed of the jaw separation to 254 mm per min.

iv) Note the force at which any part of the coating first separates from the base material. If this is less than 1,5 N, the test has failed. If the test piece peels away from the double-sided pressure sensitive tape before the force exceeds 1,5 N, an alternative type of double-sided pressure sensitive tape shall be used.

v) If the back surface of the tape is coated, repeat i) to iv) for the back coating.

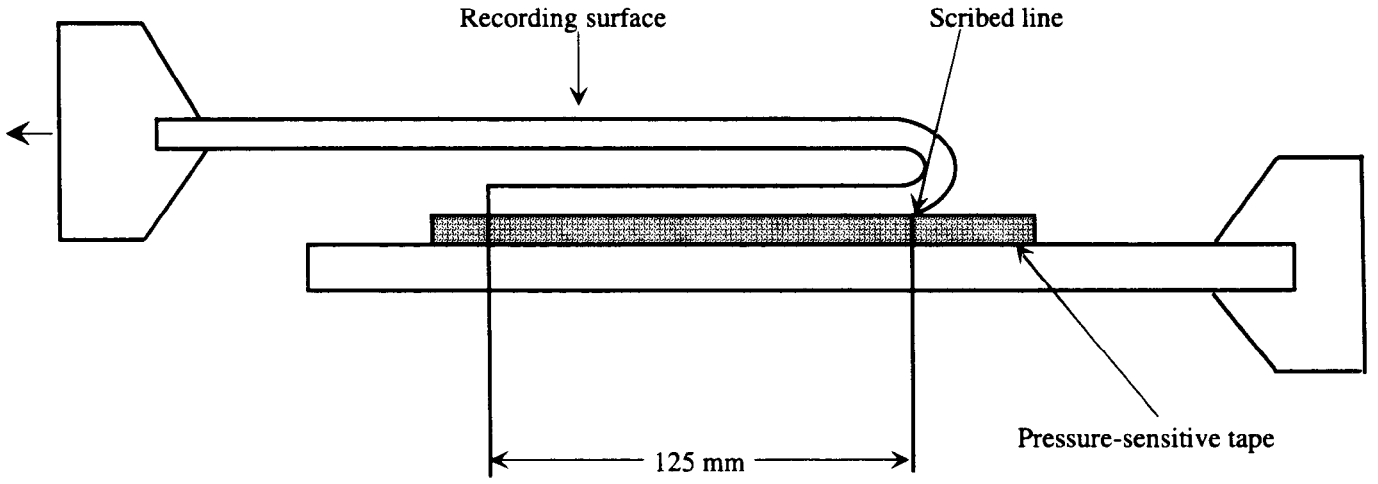

Figure 1 - Coating adhesion

6.12 Flexural rigidity

The flexural rigidity of the tape in the longitudinal direction shall be between 0,06 N·mm^2 and 0,16 N·mm^2.

Procedure

Clamp a 180 mm test piece of tape in a universal testing machine, allowing a 100 mm separation between the machine jaws. Set the jaw separation speed at 5 mm per minute. Plot force against distance. Calculate the flexural rigidity using the slope of the curve between 2,2 N and 6,7 N by the formula:

$$E = \frac{dF/WT}{dL/L}$$

$$I = WT^3/12$$

Copyright International Organization for Standardization
Provided by IHS under license with ISO
No reproduction or networking permitted without license from IHS
Not for Resale

Flexural rigidity = EI

where :

δF = change in force in N

T = measured thickness in mm

W = measured width in mm

$\delta L/L$ = change in lenght of test piece between the jaws divided by the original length between the jaws.

6.13 Electrical resistance of coated surfaces

The electrical resistance of any square area of the recording surface shall be within the range:

- 10^5 Ω to 5 x 10^8 Ω for non-backcoated tapes;
- 10^5 Ω to 5 x 10^9 Ω for backcoated tapes.

The electrical resistance of any backcoating shall be less than 10^6 Ω.

Procedure

Condition a test piece of tape to the test environment for 24 hours. Position the test piece over two 24-carat gold-plated, semi-circular electrodes having a radius r = 25,4 mm and a finish of at least N4, so that the recording surface is in contact with each electrode. These electrodes shall be placed parallel to the ground and parallel to each other at a distance d = 12,7 mm between their centres. Apply a force F of 1,62 N to each end of the test piece. Apply a d.c. voltage of 500 V ± 10 V across the electrodes and measure the resulting current flow. From this value, determine the electrical resistance.

Repeat for a total of five positions along the test piece and average the five resistance readings. For back-coated tape repeat the procedure with the backcoating in contact with the electrodes.

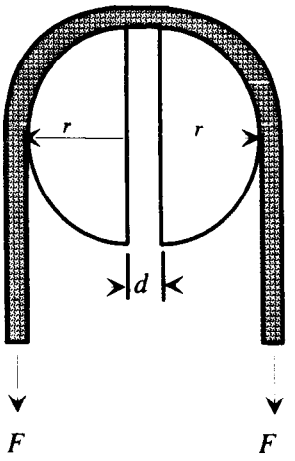

Figure 2 - Position of test piece over two semi-circular electrodes

When mounting the test piece, make sure that no conducting paths exist between the electrodes except that through the coating under test.

Note - Particular attention should be given to keeping the surfaces clean.

6.14 Tape durability

This International Standard does not specify parameters for assessing tape durability.

However, a recommended procedure is described in annex D.

6.15 Inhibitor tape

This International Standard does not specify parameters for assessing whether or not a tape is an inhibitor tape.

However, annex B gives further information on inhibitor tapes.

Copyright International Organization for Standardization
Provided by IHS under license with ISO
No reproduction or networking permitted without license from IHS
Not for Resale

6.16 Tape abrasivity

Tape abrasivity is the tendency of the tape to wear the tape transport. The length of the wear pattern on a wear bar shall not exceed 56 µm when measured as specified in annex C.

6.17 Pre-recording condition

Prior to recording data or to testing, the tape shall have been erased using alternating magnetic fields of decaying levels (anhysteretic process) to ensure that the remanent magnetic moment of the recording surface does not exceed 20 % of the maximum remanent magnetic moment. Annex E specifies the method of measurement.

In addition no low density transitions shall be present on the tape.

6.18 Magnetic recording characteristics

The magnetic recording characteristics shall be as defined by the testing requirements given below.

When performing these tests, the output or resultant signal shall be measured on the same relative pass for both a tape calibrated to the Master Standard Reference Tape and the tape under test (read-while-write or first forward-read-pass) on the same equipment.

The following conditions shall apply to the testing of all magnetic recording characteristics, unless otherwise stated:

- tape condition : pre-recording condition
- tape speed : not greater than 2,5 m/s
- read-track : within the written track
- azimuth alignment : not greater than 6' between the mean write transitions and the read gap
- write-gap length : 1,4 µm ± 0,2 µm
- write head saturation density : 0,34 T ± 0,03 T
- tape tension : 2,2 N ± 0,2 N
- recording current : test recording current

6.18.1 Typical field

The typical field of the tape shall be between 90 % and 110 % of the reference field.

Traceability to the reference field is provided by the calibration factors supplied with each Secondary Standard Reference Tape.

6.18.2 Signal amplitude

The average signal amplitude at the physical recording density of 972 ftpmm shall be between 70 % and 140 % of the standard reference amplitude.

Traceability to the standard reference amplitude is provided by the calibration factors supplied with each Secondary Standard Reference Tape.

6.18.3 Resolution

The ratio of the average signal amplitude at the physical recording density of 1 458 ftpmm to that at the physical recording density of 972 ftpmm shall be between 80 % and 120 % of the same ratio for the Master Standard Reference Tape.

Traceability to the resolution of the Master Standard Reference Tape is provided by the calibration factors supplied with each Secondary Standard Reference Tape.

6.18.4 Overwrite

Overwrite is the ratio of the average signal amplitude of the residual of the fundamental frequency of a tone pattern after being overwritten at 972 ftpmm to the average signal amplitude of the 972 ftpmm signal. The average signal amplitude of the tone pattern is the peak-to-peak amplitude of the sinusoidal signal with equal rms power.

6.18.4.1 Requirement

The overwrite for the tape shall be less than 120 % of the overwrite for the Master Standard Reference Tape.

Traceability to the overwrite of the Master Standard Reference Tape is provided by the calibration factors supplied with each Secondary Standard Reference Tape.

Procedure

Copyright International Organization for Standardization
Provided by IHS under license with ISO
No reproduction or networking permitted without license from IHS
Not for Resale

Record a tone pattern which shall be the following sequence of flux transitions:

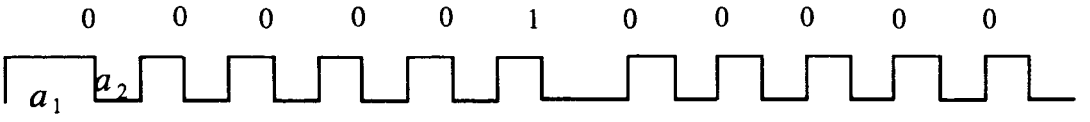

where: a_1 = 1,029 µm
a_2 = 0,514 µm

Record a 972 ftpmm signal over the tone pattern. Measure the average signal amplitude of the residual of the fundamental frequency of the tone pattern (one sixth of the frequency of the 972 ftpmm signal) and the average signal amplitude of the 972 ftpmm signal. Both amplitude measurements should be made using suitable filters.

6.18.5 Narrow-Band Signal-to-Noise Ratio (NB-SNR)

The narrow-band signal-to-noise ratio is the average signal amplitude rms power divided by the average integrated (side band) rms noise power, and is expressed in dB.

6.18.5.1 Requirement

The NB-SNR ratio shall be equal to, or greater than, 30 dB when normalized to a track width of 410 µm. The normalization factor is dB(410) = dB(W) + 10 log 410/W, where W is the track width used when measuring dB(W).

6.18.5.2 Procedure

The NB-SNR ratio shall be measured using a spectrum analyzer with a resolution bandwidth (RBW) of 1 kHz and a video bandwidth (VBW) of 10 Hz. The tape speed shall be 762 mm/s for the frequencies specified below.

The NB-SNR ratio shall be measured as follows:

i) Measure the read-signal amplitude of the 972 ftpmm signal, taking a minimum of 150 samples over a minimum length of tape of 46 m.

ii) On the next pass (read only) measure the rms noise power over the same section of tape and integrate the rms noise power (normalizing for the actual resolution bandwidth) over the range from 332 kHz to 366 kHz.

For other tape speeds all the frequencies shall be linearly scaled.

6.19 Tape quality

The tape quality (including the effects of exposure to storage and transportation environments) is defined by the testing requirements given in the following clauses. The following conditions shall apply to all quality testing requirements:

- environment : operating environment
- tape condition : pre-recording condition
- tape speed : 2 m/s
- read-track width : 410 µm
- physical recording density : 972 ftpmm
- write-gap length : 1,4 µm ± 0,2 µm
- azimuth alignment : not greater than 6' between the mean write transitions and the read gap
- write head saturation density : 0,34 T ± 0,03 T
- recording current : test recording current
- format : 18 tracks
- tape tension : 2,2 N ± 0,2 N

Copyright International Organization for Standardization
Provided by IHS under license with ISO
No reproduction or networking permitted without license from IHS
Not for Resale

6.19.1 Missing pulses

A missing pulse is a loss of read signal amplitude. A missing pulse exists when the base-to-peak read signal amplitude is 25 %, or less, of half the average signal amplitude for the preceding 25,4 mm of tape.

6.19.2 Missing pulse zones

A missing pulse zone begins with a missing pulse and ends when 64 consecutive flux transitions are detected or a length of 1 mm of tape has been measured.

The missing pulse zone rate shall be less than one in 8×10^6 flux transitions recorded.

6.19.3 Coincident missing pulse zones

There are two 9-track groups in the 18-track format. One group comprises the odd-numbered tracks, the other group comprises the even-numbered tracks. A simultaneous missing pulse zone condition on two or more tracks of a 9-track group is a coincident missing pulse zone.

If a coincident missing pulse zone occurs at the same time in both groups of tracks, it shall be considered as a single coincident missing pulse zone. Its length shall begin with the start of the earliest coincident missing pulse zone and terminate with the end of the latest coincident missing pulse zone.

No 165 m length of tape shall have more than 12 coincident missing pulse zones.

No coincident missing pulse zone shall exceed 50 mm.

Section 3 - Cartridge requirements

7 Dimensional and mechanical characteristics of the cartridge

The cartridge shall consist of the following elements:

- a case;
- a reel for the magnetic tape;
- a magnetic tape wound on the hub of the reel;
- a locking mechanism for the reel;
- a write-inhibit mechanism;
- a leader block;
- a latching mechanism for the leader block.

Dimensional characteristics are specified for those parameters deemed mandatory for interchange and compatible use of the cartridge. Where there is freedom of design, only the functional characteristics of the elements described are indicated. In the figures a typical implementation is presented. Third angle projection is used.

Where they are purely descriptive the dimensions are referred to three reference surfaces A, B and C forming a geometrical trihedral (see figure 3). Where the dimensions are related to the position of the cartridge in the drive, they may be referred to another surface of the cartridge. Figure 4 to 11 show the dimensions of the empty case.

Figure 3	is a general view of the whole cartridge;
Figure 4	shows the front side of the case which lies on reference surface A;
Figure 5	shows the top side of the case;
Figure 6	shows the rear side of the case;
Figure 7	shows the bottom side of the case which lies in reference surface C;
Figure 8	shows the side of the case which lies in reference surface B;
Figure 9	shows an enlarged view of a part of figure 4;
Figure 10	shows an enlarged cross-section of a location notch;
Figure 11	shows an enlarged cross-section of a detail of the opening of the case;
Figure 12	shows an enlarged partial cross-section of the cartridge in hand;
Figure 13	shows the same cross-section as figure 12 but of the cartridge in the drive;
Figure 14	shows schematically the teeth of the toothed rim;
Figure 15	shows two views and an enlarged cross-section of the leader block;
Figure 16	shows the fixation of the tape to the leader block, and
Figure 17	shows the leader block inserted in the case.

Copyright International Organization for Standardization
Provided by IHS under license with ISO
No reproduction or networking permitted without license from IHS
Not for Resale

7.1 Overall dimensions (figures 4 to 6)

The overall dimensions of the case shall be

$l_1 = 125{,}00 \text{ mm} \pm 0{,}32 \text{ mm}$

$l_2 = 109{,}00 \text{ mm} \pm 0{,}32 \text{ mm}$

$l_3 = 24{,}50 \text{ mm}\ {}^{+0{,}50 \text{ mm}}_{-0{,}32 \text{ mm}}$

The corners of the case shall be rounded off as specified by

$r_1 = 3{,}00$ max.

$r_2 = 4{,}00$ max.

$r_3 = 3{,}00$ min.

7.2 Write-inhibit mechanism (figures 4 and 5)

The write-inhibit mechanism shall have a flat surface identified by a visual mark, e.g. a white spot, when in the position in which writing is inhibited.

The flat surface shall be accessible through a window in the front of the case. The location and dimensions of the window are specified by

$l_4 = 11{,}80 \text{ mm} \pm 0{,}25 \text{ mm}$

$l_5 = 15{,}60 \text{ mm} \pm 0{,}25 \text{ mm}$

$l_6 = 7{,}40 \text{ mm} \pm 0{,}25 \text{ mm}$

$l_7 = 12{,}00 \text{ mm} \pm 0{,}25 \text{ mm}$

In the write-inhibit position the flat surface of the write-inhibit mechanism shall be behind this window at a distance

$l_8 = 2{,}55$ mm min.

from the front side of the case.

In the write-enable position this surface shall be within 0,25 mm of the front side of the case.

The force required for the operation of the write-inhibit mechanism shall be in the range

2 N to 9 N

when applied tangentially to the surface of the case.

This International Standard does not prescribe the actual implementation of the write-inhibit mechanism. For example, it can be a rotatable or a slidable element. The implementation may require a larger or additional window but shall not impair the integrity of the case against potential contaminants.

7.3 Label area of the rear side (figures 5 and 6)

On the rear side of the case there shall be a label area specified by

$l_9 = 7{,}00 \text{ mm} \pm 0{,}25 \text{ mm}$

$l_{10} = 80{,}00 \text{ mm}\ {}^{+0{,}30 \text{ mm}}_{-0{,}16 \text{ mm}}$

$l_{11} = 12{,}30 \text{ mm} \pm 0{,}25 \text{ mm}$

$l_{12} = 0{,}50 \text{ mm} \pm 0{,}25 \text{ mm}$

$r_4 = 1{,}00$ mm max.

Copyright International Organization for Standardization
Provided by IHS under license with ISO
No reproduction or networking permitted without license from IHS
Not for Resale

7.4 Label area of the top side (figure 5)

On the top side of the case there shall be a label area, recessed by 0,50 mm ± 0,25 mm, specified by l_9, l_{10}, l_{12} and in addition by

l_{13} = 31,00 mm ± 0,25 mm

$l_{14} = 75{,}00\ ^{+0{,}30\ \text{mm}}_{-0{,}16\ \text{mm}}$

7.5 Case opening (figures 4, 5, 7 and 9)

The case shall have an opening for the tape in which the leader block can be inserted (see also figure 17). This opening shall be specified by

l_{15} = 4,70 mm ± 0,25 mm

l_{16} = 14,90 mm ± 0,32 mm

l_{17} = 7,50 mm ± 0,25 mm

l_{18} = 87,10 mm ± 0,25 mm

l_{19} = 4,00 mm ± 0,25 mm

r_5 = 4,00 mm ± 0,25 mm

α = 50° ± 1°

Figure 7 shows at a larger scale the details of the configuration of the case opening as seen at the right-hand side of figure 2.

l_{61} = 3,9 mm ± 0,5 mm

$l_{62} = 16{,}9\ ^{+0{,}5\ \text{mm}}_{-0{,}4\ \text{mm}}$

l_{63} = 3,0 mm ± 0,5 mm

l_{64} = 11,6 mm ± 0,5 mm

ω_1 = 1° ± 30'

ω_2 = 20° ± 2°

7.6 Locating notches (figures 7, 8 and 10)

There shall be two locating notches open towards the bottom side. These location notches shall be specified by

l_{20} = 106,00 mm ± 0,25 mm

l_{21} = 5,00 mm ± 0,25 mm

l_{22} = 7,00 mm ± 0,25 mm

l_{23} = 104,00 mm ± 0,25 mm

l_{24} = 2,50 mm ± 0,25 mm

β = 1°30' ± 30'

γ = 2° ± 30'

7.7 Locating areas (figure 7)

The bottom side of the case shall have three circular locating areas a_1, a_2 and a_3 which shall lie in the same horizontal plane within 0,25 mm.

Areas a_1 and a_2 shall have a diameter of 10,00 mm ± 0,25 mm. The position of their centres shall be specified by

Copyright International Organization for Standardization
Provided by IHS under license with ISO
No reproduction or networking permitted without license from IHS
Not for Resale

l_{25} = 108,50 mm ± 0,25 mm

l_{26} = 3,50 mm ± 0,25 mm

l_{27} = 105,50 mm ± 0,25 mm

Area a_3 shall have a diameter of 14,00 mm ± 0,25 mm. The position of its centre shall be specified by

l_{28} = 31,25 mm ± 0,25 mm

l_{29} = 54,50 mm ± 0,25 mm

7.8 Inside configuration of the case around the case opening (figures 7 and 11)

Figures 7 and 11 show the inside configuration of the case around the opening of the case. This configuration shall be defined as follows (see also 7.10)

l_{30} = 3,30 mm ± 0,25 mm

l_{31} = 18,40 mm ± 0,25 mm

r_6 = 1,50 mm ± 0,25 mm

r_7 = 1,50 mm ± 0,25 mm

The oblique edge of the case shall be tangential to the arc of circle defined by r_6 at an angle of

λ = 40° ± 30'

7.9 Other external dimensions of the case (figure 8)

The external form of the case shall be further specified by

l_{32} = 113,2 mm ± 0,3 mm

l_{33} = 26,00 mm ± 0,25 mm

r_8 = 145,50 mm ± 0,25 mm

r_9 = 145,50 mm ± 0,25 mm

δ = 30° ± 30'

7.10 Central window (figure 7)

The bottom side of the case shall have a central window. The location of its centre shall be specified by l_{29} and

l_{34} = 61,00 mm ± 0,25 mm

Its diameter shall be

$$d_1 = 43{,}5 \text{ mm} \begin{matrix} +\,2{,}0 \text{ mm} \\ -\,1{,}0 \text{ mm} \end{matrix}$$

The angle with its apex at the centre of this window and formed by the two lines tangential to the parts shown in figure 7 in cross-section shall be

θ = 16° ± 30'

7.11 Stacking ribs

The bottom side of the case shall have two parallel stacking ribs. Their dimensions shall be

l_{35} = 5,00 mm ± 0,25 mm

l_{36} = 1,00 mm ± 0,16 mm

l_{37} = 74,50 mm ± 0,25 mm

Their locations shall be

Copyright International Organization for Standardization
Provided by IHS under license with ISO
No reproduction or networking permitted without license from IHS
Not for Resale

l_{38} = 31,00 mm ± 0,25 mm

l_{39} = 7,50 mm ± 0,32 mm

l_{40} = 79,50 mm ± 0,25 mm

7.12 Flexibility of the case

The flexibility of the top and bottom sides of the case (see figure 3) is the amount of deflection observed when they are submitted to a perpendicular force F.

7.12.1 Requirements

The amount of deflection d shall meet the following requirements:

Deflection of the top side:

$$0{,}0256\ F \leq d \leq 0{,}38 + 0{,}054\ F$$

Deflection of the bottom side:

$$0{,}0228\ F \leq d \leq 0{,}38 + 0{,}040\ F$$

where:

d is the measured deflection in mm

4,5 N ≤ F ≤ 54,0 N

7.12.2 Procedure

Measure the flexibility of the case in a universal testing machine operating in the compression mode. Use a suitable load cell for the test. Apply a single point load with a radius of 10 mm ± 1 mm on the bottom and subsequently on the top of the cartridge at the points shown in figure 5 and figure 7, and specified by

l_{65} = 86,9 mm nominal

l_{66} = 54,5 mm nominal

7.13 Tape reel (figures 12 and 13)

Figures 12 and 13 show the tape reel mounted within the case. Figure 12 specifies the different dimensions of the reel when the cartridge is in hand, figure 13 when it is within the drive. For clarity the stacking ribs are not shown in figure 12 and 13.

7.13.1 Locking mechanism (figure 13)

This International Standard does not specify the actual implementation of the locking mechanism. However, functionally it shall satisfy the following requirements in the locked position:

- the angular resolution shall not be greater than 6°;
- the reel shall not rotate by more than 10° when a torque not greater than 0,32 N·m is applied in the direction that will cause the tape to unwind.

The button of the locking mechanism shall be made of nylon 6/6 with 2 % ± 1 % molybdenum disulphide.

Its dimensions shall be

d_9 = 2,0 mm ± 0,5 mm

d_{10} = 10,0 mm ± 0,2 mm

ρ = 15° ± 2°

7.13.2 Axis of rotation of the reel

The axis of rotation of the reel shall be perpendicular to Plane P (see 7.13.7) and pass through the centre of the central window as specified by l_{29} and l_{34}.

Copyright International Organization for Standardization
Provided by IHS under license with ISO
No reproduction or networking permitted without license from IHS
Not for Resale

7.13.3 Metallic insert

The reel shall have a metallic insert made of stainless steel (ISO 683-13, type 3 or 7). It shall withstand a pull out force of 300 N min. Its dimensions shall be

$$d_2 = 35{,}00 \text{ mm} \begin{matrix} +\,0{,}20 \text{ mm} \\ -\,1{,}20 \text{ mm} \end{matrix}$$

$d_3 = 11{,}15 \text{ mm} \pm 0{,}05 \text{ mm}$

$e_1 = 1{,}51 \text{ mm} \pm 0{,}10 \text{ mm}$

Its central opening (diameter d_3) shall be concentric with the axis of rotation of the reel within 0,15 mm.

The metallic insert shall be parallel to plane P within 0,15 mm.

7.13.4 Toothed rim

The reel shall have a toothed rim accessible through the central window. Its dimensions shall be

$$d_4 = 36{,}00 \text{ mm} \begin{matrix} +\,0{,}50 \text{ mm} \\ -\,0{,}00 \text{ mm} \end{matrix}$$

$d_5 = 41{,}00 \text{ mm} \pm 0{,}25 \text{ mm}$

$\psi = 11°3' \pm 5'$

7.13.5 Hub of the reel

The hub of the reel shall have a diameter

$$d_6 = 50{,}0 \text{ mm} \begin{matrix} +\,0{,}0 \text{ mm} \\ -\,0{,}2 \text{ mm} \end{matrix}$$

Further dimensions of the hub shall be

$$l_{41} = 13{,}05 \text{ mm} \begin{matrix} +\,0{,}20 \text{ mm} \\ -\,0{,}10 \text{ mm} \end{matrix}$$

when measured at the hub surface, and

$r_{10} = 0{,}08$ mm max.

The hub shall meet the following requirements:

- the straightness of the hub surface shall be within 0,04 mm;
- the perpendicularity to the plane P through the pitch line of the teeth of the rim (see 7.13.7) shall be within 0,07 mm;
- the ratio of the difference in the diameters d_6 of any two sections (perpendicular to the axis) to the distance between these sections shall not exceed 0,0038;
- the rate of change across the width of the hub surface shall not exceed 0,025 mm per mm;
- the total runout of the hub related to the cylinder perpendicular to the circular pitch line (see 7.13.7) of the teeth of the toothed rim shall not exceed 0,2 mm total indicator reading (TIR).

7.13.6 Relative positions

7.13.6.1 With the cartridge in hand (figure 12):

- the distance of the tip of the button of the locking mechanism to reference surface C shall be

$$l_{42} = 1{,}90 \text{ mm} \begin{matrix} +\,1{,}40 \text{ mm} \\ -\,0{,}90 \text{ mm} \end{matrix}$$

- the distance from the bottom surface of the metallic insert to reference surface C shall be

Copyright International Organization for Standardization
Provided by IHS under license with ISO
No reproduction or networking permitted without license from IHS
Not for Resale

$$l_{43} = 0{,}4\ \text{mm}\ {}^{+\ 1{,}0\ \text{mm}}_{-\ 0{,}5\ \text{mm}}$$

7.13.6.2 Whether the cartridge is in hand or in the drive (figure 12 and 13):

- the distance from the bottom surface of the metallic insert to plane P shall be

  $l_{44} = 2{,}27\ \text{mm} \pm 0{,}12\ \text{mm}$

- the distance of the inside of the lower flange of the reel to plane P shall be

  $l_{45} = 0{,}65\ \text{mm} \pm 0{,}09\ \text{mm}$

7.13.6.3 With the cartridge in the drive (figure 13):

- the distance from the tip of the button of the locking mechanism to reference surface C shall be

  $l_{46} = 8{,}1\ \text{mm} \pm 0{,}2\ \text{mm}$

- the force required to move the button into this position shall not exceed 12,25 N

- the distance from the centreline of the tape to reference surface C shall be

  $l_{47} = 12{,}25\ \text{mm}$ nominal

- the distance from the reference surface C to Plane P (see 7.14.7) shall be

  $l_{60} = 5{,}04\ \text{mm} \pm 0{,}20\ \text{mm}$

7.13.7 Characteristics of the toothed rim (figure 12)

The toothed rim shall comprise 60 teeth spaced at an angle of

$6° \pm 5'$ non-cumulative

The teeth are specified at the pitch diameter d_5 by

$l_{48} = 4\ \text{mm}$ nominal

$l_{49} = 2\ \text{mm}$ nominal

$\varphi = 30°$ nominal

The pitch line is the circumference of the teeth taken at the distance l_{49}. The plane in which it lies is the plane P.

The blend radius at the bottom of the teeth shall be

$r_{11} = 0{,}25\ \text{mm}$ max.

The blend radius at the tip of the teeth shall be

$0{,}10\ \text{mm} \leq r_{12} \leq 0{,}30\ \text{mm}$

7.14 Leader block (figure 15)

The leader block shall have the following dimensions:

$l_{50} = 31{,}80\ \text{mm} \pm 0{,}04\ \text{mm}$

$l_{51} = 6{,}8\ \text{mm} \pm 0{,}1\ \text{mm}$

$l_{52} = 21{,}8\ \text{mm} \pm 0{,}2\ \text{mm}$

$$l_{53} = 10{,}93\ \text{mm}\ {}^{+\ 0{,}06\ \text{mm}}_{-\ 0{,}08\ \text{mm}}$$

$l_{54} = 5{,}46\ \text{mm} \pm 0{,}10\ \text{mm}$

$l_{55} = 6{,}00\ \text{mm} \pm 0{,}25\ \text{mm}$

Copyright International Organization for Standardization
Provided by IHS under license with ISO
No reproduction or networking permitted without license from IHS
Not for Resale

$$l_{56} = 16{,}5\ \text{mm}\ {}^{+\,0{,}0\ \text{mm}}_{-\,0{,}2\ \text{mm}}$$

$l_{57} = 5{,}2\ \text{mm} \pm 0{,}2\ \text{mm}$

$r_{13} = 25{,}00\ \text{mm} \pm 0{,}25\ \text{mm}$

$r_{14} = 1{,}4\ \text{mm} \pm 0{,}2\ \text{mm}$

$r_{15} = 5{,}50\ \text{mm} \pm 0{,}25\ \text{mm}$

$d_7 = 7{,}0\ \text{mm} \pm 0{,}2\ \text{mm}$

$d_8 = 4{,}0\ \text{mm} \pm 0{,}2\ \text{mm}$

$\mu_1 = 90° \pm 2°$

$$\mu_2 = 8°\ {}^{+\,0°}_{-\,3°}$$

$$\mu_3 = 44°\ {}^{+\,0°}_{-\,3°}$$

7.15 Attachment of the tape to the leader block (figure 16)

There shall be a cylindrical insert for attaching the tape to the leader block. It shall cover the full width of the tape and not protrude beyond the surfaces of the leader block.

In zone Z the bottom edge of the tape (as seen in figure 16) shall be parallel to the edge of the leader block within 0,12 mm and shall be at a distance

$l_{58} = 1{,}90\ \text{mm} \pm 0{,}26\ \text{mm}$

from it, when measured while the tape is under tension.

When fixed to the leader block the end of the tape shall not protrude above the surface of the leader block by more than

$l_{59} = 2{,}5\ \text{mm}$

The leader block shall remain attached to the tape when a force of 10 N is applied at an angle

$\mu_4 = 38° \pm 2°$

as shown in figure 16.

7.16 Latching mechanism (figure 17)

This International Standard does not specify the actual implementation of the latching mechanism for the leader block. It specifies the position of the leader block and the forces required to pull out and to insert it.

When the leader block is latched into the case, the point defined by l_{51} and l_{54} (see figure 15) shall fall within a circle of radius 0,5 mm max. the centre of which is defined by the intersection of the two lines specified by the nominal values of l_{17} and l_{18} (see figure 5).

The pull-out force, i.e. the force required to pull the leader block and the tape attached to it out of the cartridge shall satisfy both following conditions:

- to be in the range 2,0 N to 7,5 N, and
- the product of the maximum value of the pull-out force and the displacement distance shall be less than 13 N·mm.

The insertion force shall be measured at the same angle and jaw separation speed as the pull-out force.

Procedure

Clamp the cartridge in a universal testing machine that can extract the leader block at the angle μ_5 starting at the pickup point (see figure 17). The leader block pickup point is located by the intersection of the centre lines positioned by dimensions l_{17}, l_{18}. Set the jaw separation speed to 10 mm/min, pull the leader block allowing it to pivot on the pulling pin as it exits the

Copyright International Organization for Standardization
Provided by IHS under license with ISO
No reproduction or networking permitted without license from IHS
Not for Resale

cartridge. Measure the distance between the point where the force first exceeds 0,5 N and the point where the maximum pull-out force is observed. The force shall be measured with a pin that fits into diameters d_7 and d_8 (see figure 15).

The insertion force, i.e. the force required to push the leader block into latched position in the cartridge, shall not be greater than 12 N when measured at an angle

$\mu_5 = 48° \pm 3°$.

7.17 Tape wind

When the cartridge is viewed from the top, the tape shall be wound counter-clockwise and with the recording surface towards the hub.

7.18 Wind tension

The tape shall be wound with a tension of

2,2 N ± 0,3 N

7.19 Circumference of the tape reel

The tape shall be wound to a circumference of between 280 mm and 307 mm.

7.20 Moment of inertia

The moment of inertia of the tape reel is the ratio of the torque applied to it (complete with tape, hub and flanges) when it is free to rotate about a given axis to the angular acceleration thus produced about that axis.

The moment of inertia of the reel and tape shall be

- Between 145 x 10^{-6} kg·m^2 and 180 x 10^{-6} kg·m^2 when the circumference is not less than 280 mm but less than 289 mm.
- Between 160 x 10^{-6} kg·m^2 and 195 x 10^{-6} kg·m^2 when the circumference is not less than 289 mm but less than 298 mm.
- Between 180 x 10^{-6} kg·m^2 and 216 x 10^{-6} kg·m^2 when the circumference is not less than 298 mm and not greater than 307 mm.
- The empty reel moment of inertia shall be:

  33,00 x 10^{-6} kg·m^2 ± 3,63 x 10^{-6} kg·m^2.

Procedure

Torsionally oscillate the reel on an inertial dynamics unit. The oscillation period shall be measured electronically with a universal counter. The oscillation time shall then be converted to its rotational inertial value.

Copyright International Organization for Standardization
Provided by IHS under license with ISO
No reproduction or networking permitted without license from IHS
Not for Resale

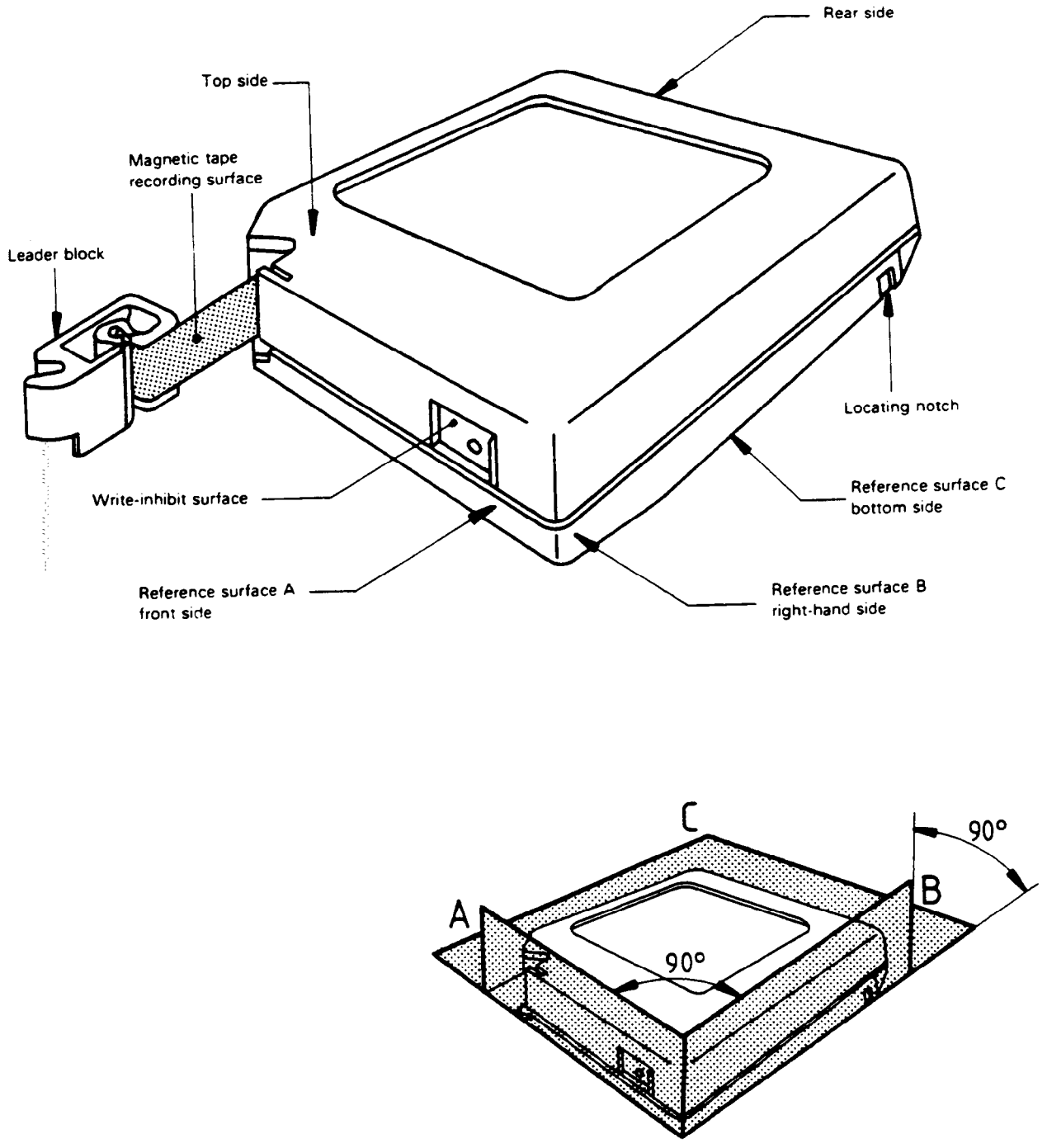

Figure 3 - Cartridge

Copyright International Organization for Standardization
Provided by IHS under license with ISO
No reproduction or networking permitted without license from IHS
Not for Resale

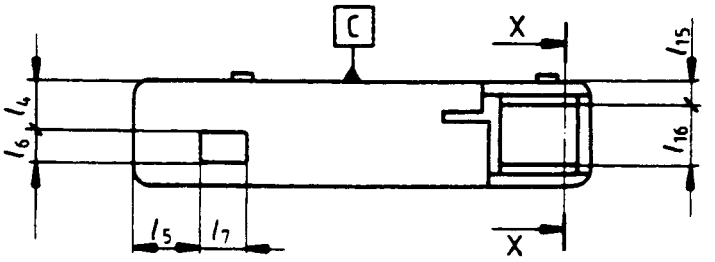

Figure 4 - Front side of case

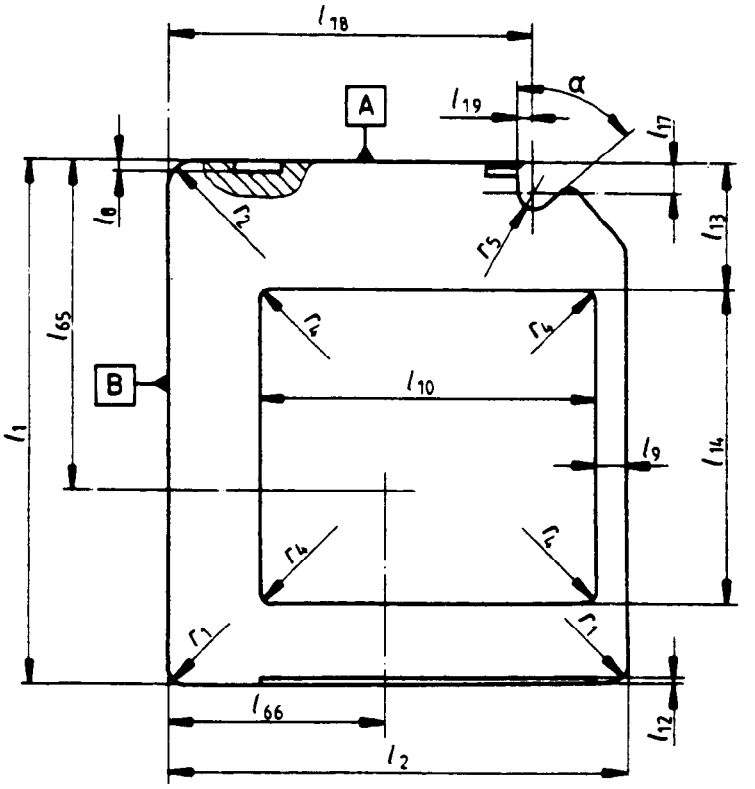

Figure 5 - Top side of case

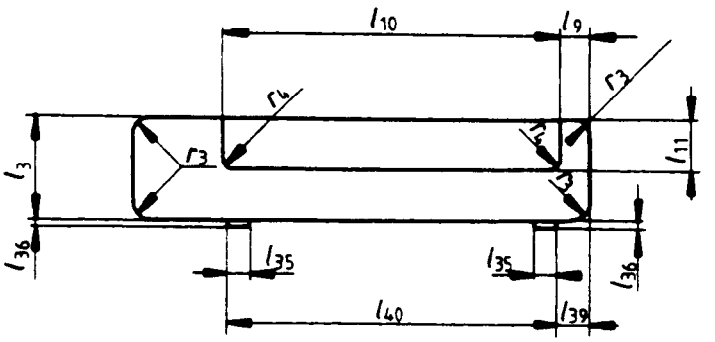

Figure 6 - Rear side of case

Copyright International Organization for Standardization
Provided by IHS under license with ISO
No reproduction or networking permitted without license from IHS
Not for Resale

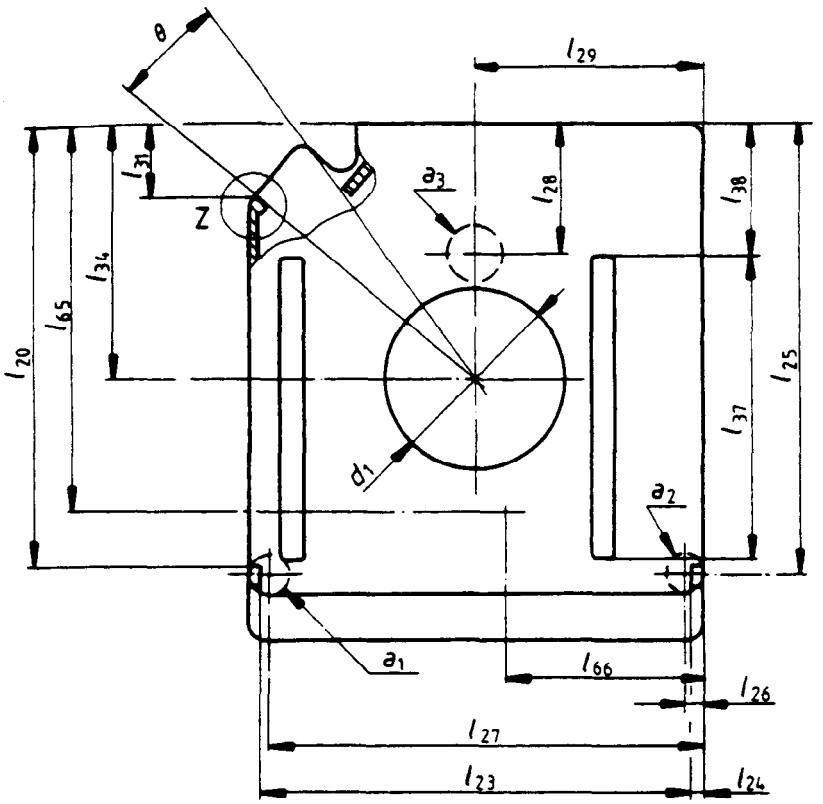

Figure 7 - Bottom side of case

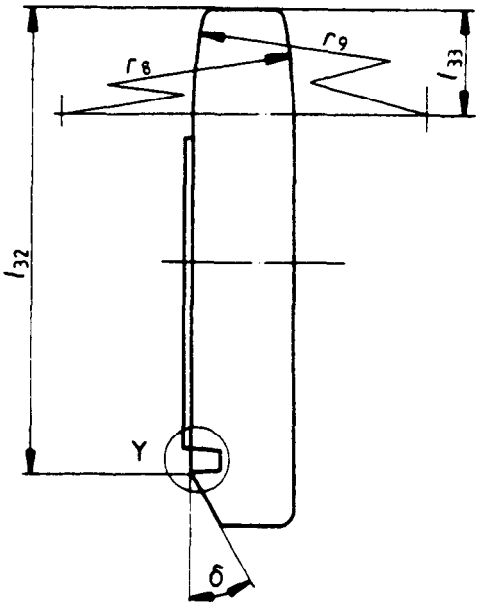

Figure 8 - Side of case

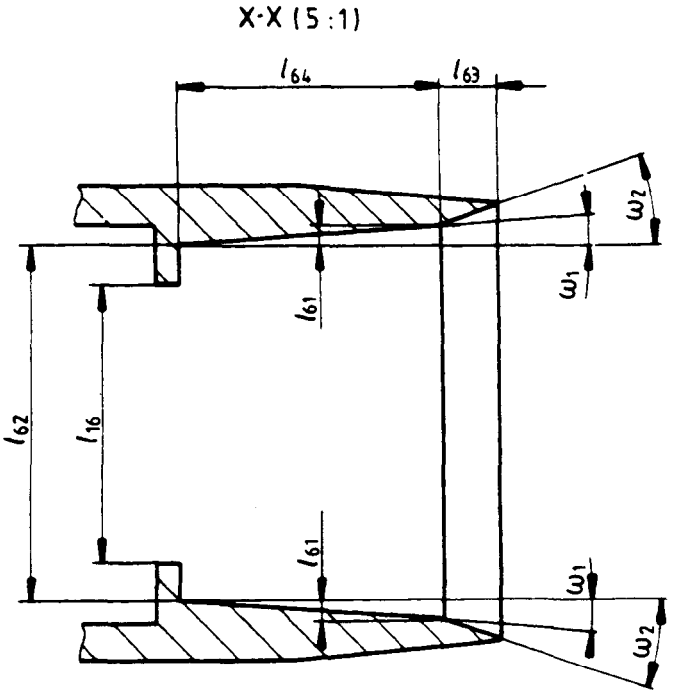

Figure 9 - Enlarged view

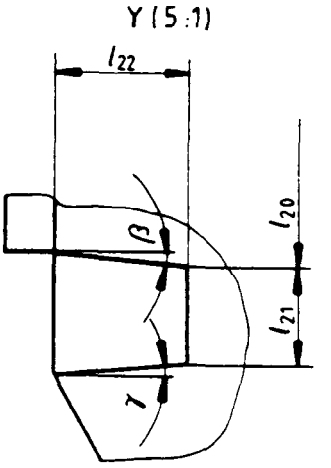

Figure 10 - Cross-section of a location notch

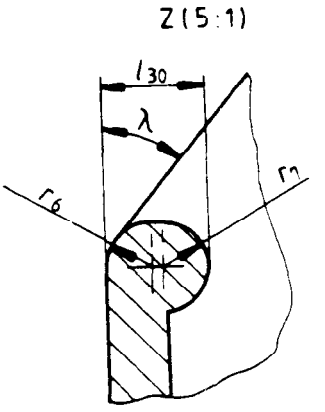

Figure 11 - Cross-section of a detail of the opening of case

Copyright International Organization for Standardization
Provided by IHS under license with ISO
No reproduction or networking permitted without license from IHS
Not for Resale

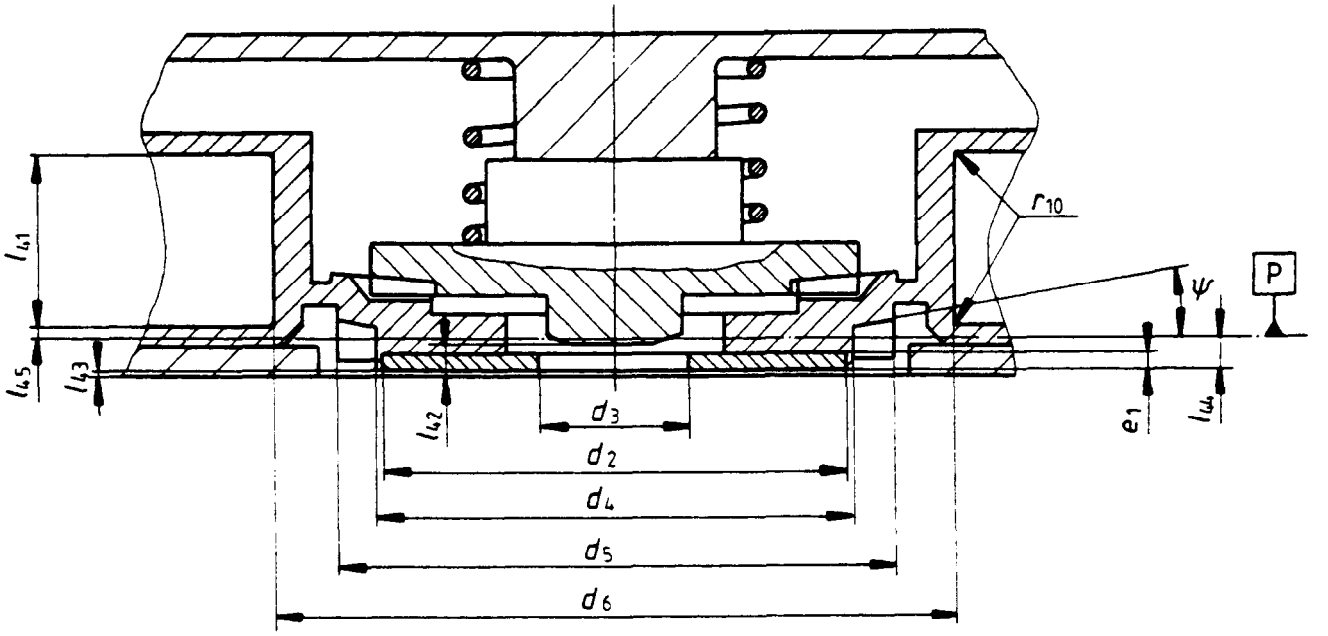

Figure 12 - Cross-section of the cartridge in hand

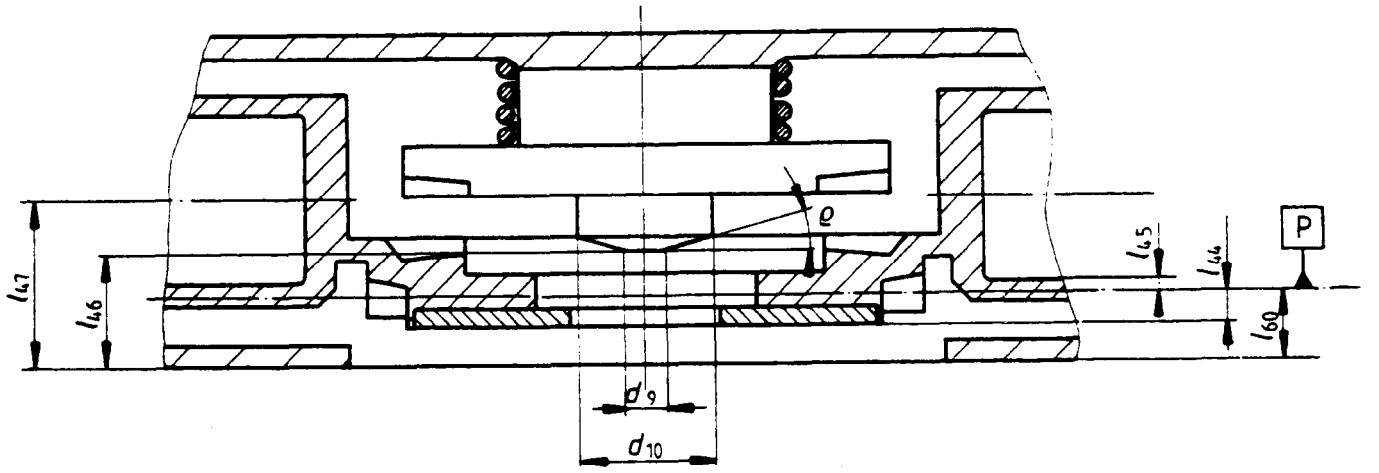

Figure 13 - Cross-section of the cartridge in the drive

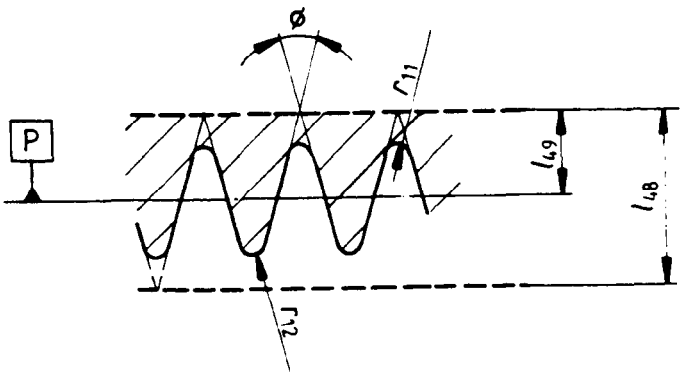

Figure 14 - Teeth of the toothed rim

Copyright International Organization for Standardization
Provided by IHS under license with ISO
No reproduction or networking permitted without license from IHS
Not for Resale

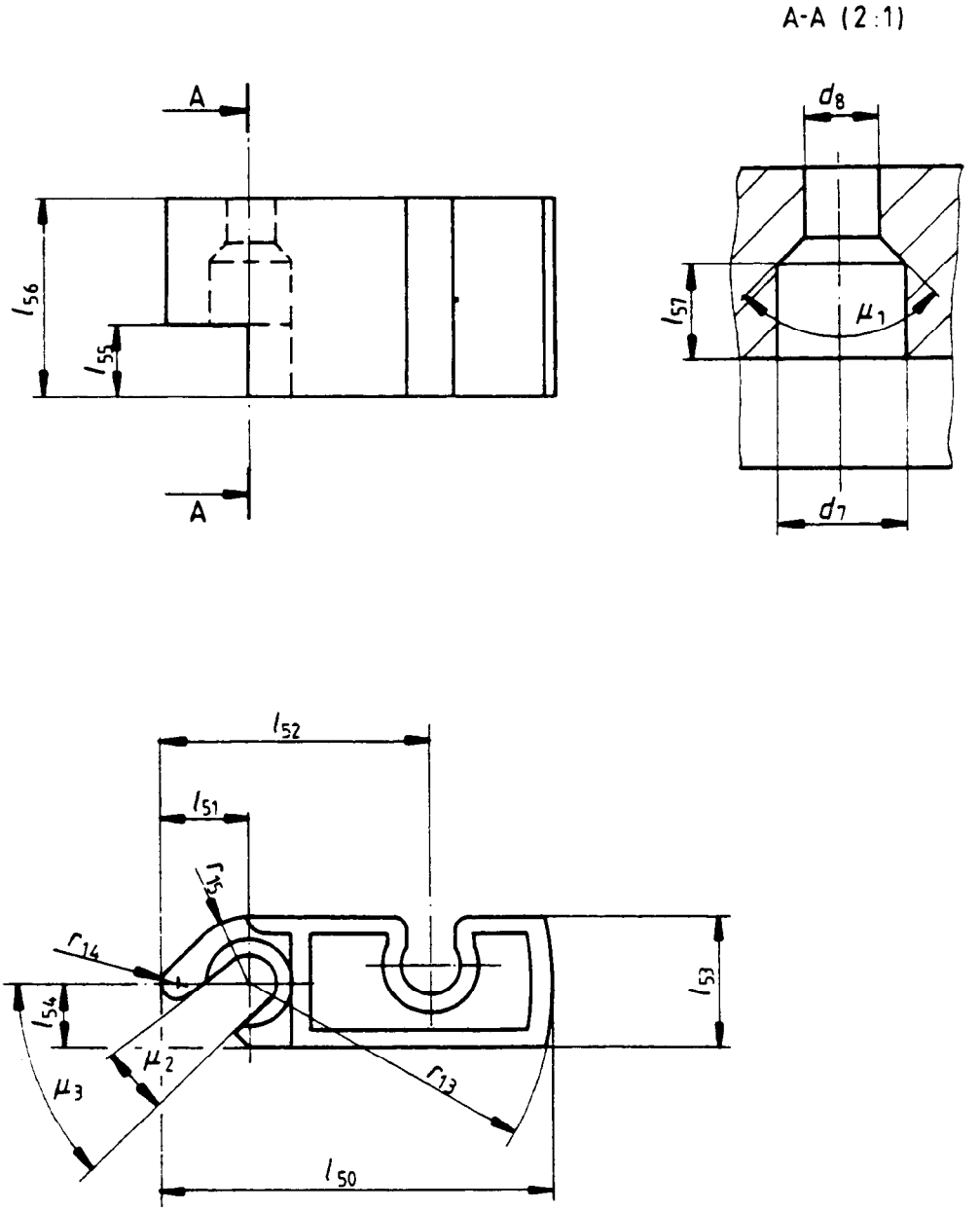

Figure 15 - Cross-section of leader block

Copyright International Organization for Standardization
Provided by IHS under license with ISO
No reproduction or networking permitted without license from IHS
Not for Resale

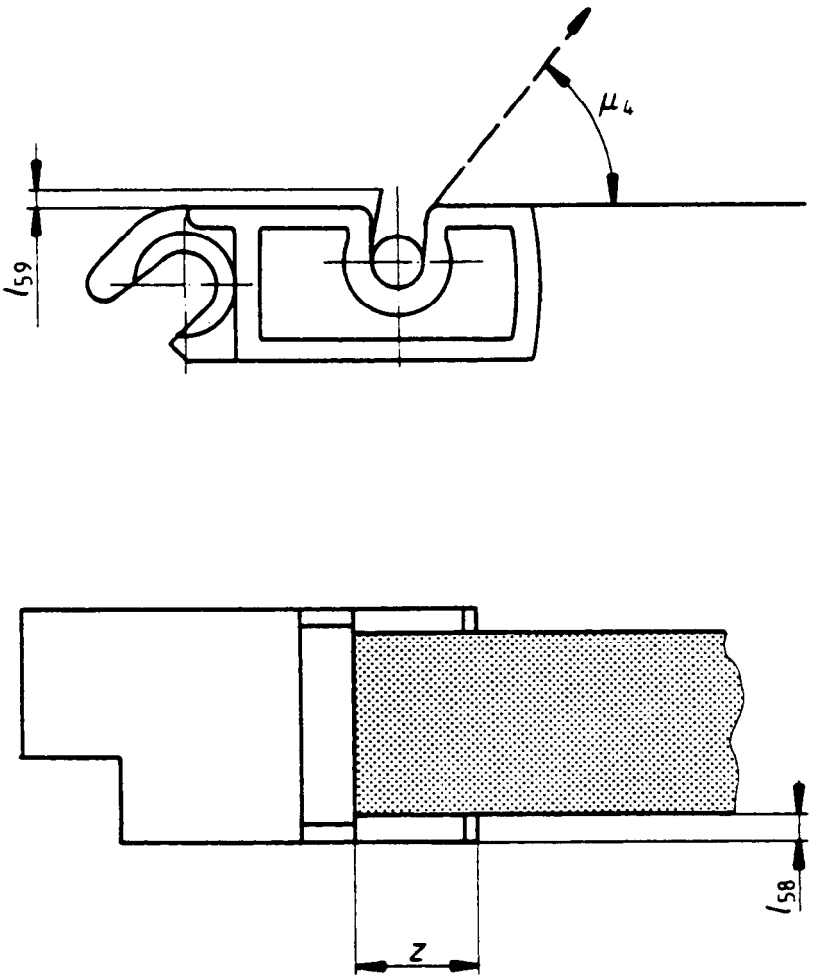

Figure 16 - Fixation of tape to leader block

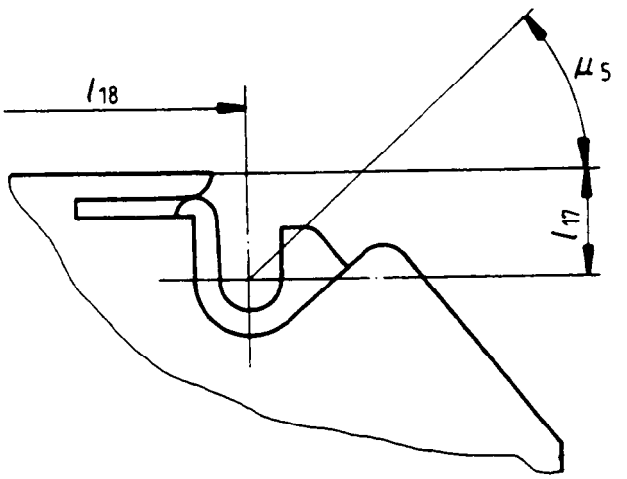

Figure 17 - Leader block in case

Copyright International Organization for Standardization
Provided by IHS under license with ISO
No reproduction or networking permitted without license from IHS
Not for Resale

Section 4 - Recording requirements

8 Method of recording

The method of recording shall be as follows:

- a ZERO is represented by a flux transition at the beginning of a bit cell followed by a flux transition at the centre of the bit cell,
- a ONE is represented by a flux transition at the beginning of a bit cell.

8.1 Physical recording density

The physical recording density shall be

- for all ZEROs: 1 944 ftpmm
- for all ONEs: 972 ftpmm

8.2 Bit cell length

The resulting nominal bit cell length is 1,029 µm.

8.3 Average bit cell length

The average bit cell length shall be the sum of n bit cell lengths divided by n.

8.4 Long-term average bit cell length

The long-term average bit cell length shall be the average bit cell length taken over a minimum of 972 000 bit cells. The long-term average bit cell length shall be within ± 4 % of the nominal bit cell length.

8.5 Short-term average bit cell length

The short-term average bit cell length (STA) shall be the average bit cell length taken over 16 bit cells. The short-term average bit cell length shall be within ± 7 % of the nominal bit cell length.

8.6 Rate of change

The rate of change of the short-term average bit cell length shall not exceed 1,6 %.

$$\left| \frac{STA_n}{16 \text{ bits}} \right\| \frac{STA_{n+1}}{16 \text{ bits}} \Bigg|$$

$$100 \times \frac{|STA_n - STA_{n+1}|}{STA_n} \leq 1{,}6\,\%$$

Figure 18 - Rate of change

8.7 Bit shift

The maximum displacement of any ONEs zero crossing, exclusive of missing pulses, shall not deviate by more than 28 % from the expected nominal position as defined by the average bit cell length. See annex G for the test procedure.

8.8 Total character skew

No bit belonging to the same written transverse column shall be displaced by more than 19 bit cell lengths when measured in a direction parallel to the reference edge (see 9.2) of the tape.

8.9 Read signal amplitude

The average signal amplitude of an interchanged cartridge averaged over 4 000 flux transitions at 972 ftpmm shall be between 60 % and 150 % of the standard reference amplitude. Averaging for the interchanged cartridge may be segmented into blocks.

Traceability to the standard reference amplitude is provided by the calibration factors supplied with each Secondary Standard Reference Tape.

Copyright International Organization for Standardization
Provided by IHS under license with ISO
No reproduction or networking permitted without license from IHS
Not for Resale

8.10 Coincident missing pulses

No block shall be recorded over a coincident missing pulse zone (see also 11.4).

9 Track format

9.1 Number of tracks

There shall be 18 tracks.

9.2 Reference edge

The reference edge of the tape is its bottom edge when viewing the recording surface of the tape with the hub end of the tape to the observer's right (see 11.8.2).

9.3 Track positions

The distance from the centrelines of the tracks to the reference edge shall be

Track 1	: 11,68 mm
Track 2	: 11,05 mm
Track 3	: 10,42 mm
Track 4	: 9,79 mm
Track 5	: 9,16 mm
Track 6	: 8,53 mm
Track 7	: 7,90 mm
Track 8	: 7,27 mm
Track 9	: 6,64 mm
Track 10	: 6,01 mm
Track 11	: 5,38 mm
Track 12	: 4,75 mm
Track 13	: 4,12 mm
Track 14	: 3,49 mm
Track 15	: 2,86 mm
Track 16	: 2,23 mm
Track 17	: 1,60 mm
Track 18	: 0,97 mm

The tolerance shall be ± 0,04 mm for all tracks.

9.4 Track width

The width of a written track shall be 0,540 mm ± 0,017 mm.

9.5 Azimuth

On any track the angle that a flux transition across the track makes with a line perpendicular to the reference edge shall not be greater than 3 minutes of arc.

Note - At the time of writing the tape, the azimuth should be less than 1 minute of arc. The remaining 2 minutes of arc is the allowance for tape distortion caused by environmental conditions and aging.

10 Data format

Prior to recording, the data shall be arranged in groups completed with computed check characters. These data groups shall be in turn arranged in a given sequence together with additional groups of bytes having prescribed bit patterns. The so arranged data bytes and additional bytes shall then be recorded on the tape according to a specific coding scheme.

10.1 Types of bytes

10.1.1 Data bytes

Data bytes comprise User bytes and Block-ID bytes.

Copyright International Organization for Standardization
Provided by IHS under license with ISO
No reproduction or networking permitted without license from IHS
Not for Resale

10.1.1.1 User bytes

User bytes are 8-bit bytes available for the recording of the information to be interchanged and/or stored.

10.1.1.1.1 Coded representation of character in User bytes

Characters shall be represented by means of the 7-bit Coded Character Set (ISO 646) and, where required, by its 7-bit or 8-bit extensions (ISO 2022) or by means of an 8-bit Code (ISO 4873).

i) Recording of 7-bit Coded Characters

Each 7-bit coded character shall be recorded in bit positions B_1 to B_7 of a byte; bit-position B_8 shall be recorded with ZERO. The relationship shall be as follows:

Table 1 - 7-bit coding

Binary weight	-	64	32	16	8	4	2	1
Bit designation	-	b_7	b_6	b_5	b_4	b_3	b_2	b_1
Bit-positions in the byte	B_8	B_7	B_6	B_5	B_4	B_3	B_2	B_1

ii) Recording of 8-bit Coded Characters

Each 8-bit coded character shall be recorded in bit positions B_1 to B_8 of a byte. The relationship shall be as follows:

Table 2 - 8-bit coding

Binary weight	128	64	32	16	8	4	2	1
Bit designation	b_8	b_7	b_6	b_5	b_4	b_3	b_2	b_1
Bit-positions in the byte	B_8	B_7	B_6	B_5	B_4	B_3	B_2	B_1

Note - If each character has a coded representation consisting of one single 7-bit or 8-bit byte, the number of characters is equal to the number of User bytes. Code extension techniques allow multiple-byte representation. In this case the number of characters is equal to the number of User bytes divided by the number of bytes of the coded representation of a single character.

10.1.1.1.2 Representation of binary data in User bytes

When the coding method requires it, the coded representations to be recorded in User bytes shall be regarded as an ordered sequence of bit positions, each containing a bit, which can be either a ZERO or a ONE.

The binary weights, bit designations and bit positions shall be as given in 10.1.1.1.1 ii).

10.1.1.2 Block-ID bytes

There shall be four 8-bit bytes for the representation of the Block-ID. These four bytes shall follow the last User byte. The 32 bits are numbered from 1 (most significant) to 32 (least significant). These bits shall have the following values:

Bit 1 shall be ZERO.

Bits 2 to 8 shall express in binary notation the value of a Physical Position Indicator. This value shall be rounded up to the next positive integer satisfying the condition

$$1 \leq \left\lceil 62{,}5 \left(\frac{\sqrt{625 + R_0^2 - R^2}}{R} - \frac{25}{R_0} \right) \right\rceil \leq 91$$

where

R_0 is the initial radius of the fully loaded reel of tape,

Copyright International Organization for Standardization
Provided by IHS under license with ISO
No reproduction or networking permitted without license from IHS
Not for Resale

R is the current radius of the reel of tape.

Note - The purpose of the Physical Position Indicator is to provide a coarse, fast indication of the location of the data without having to read the data or all Block-ID bytes.

Bits 9 to 12 shall be ZEROs.

Bits 13 to 32 shall express in binary notation a Count which is increased by 1 for each Data Block (see 10.3) and each Tape Mark (see 11.5). The Count is set to 0 for the first recorded Data Block (see 10.6) or Tape Mark following the initial Interblock Gap (see 11.3).

These 32 bits shall be assigned to the following positions.

Table 3 - Block-ID bytes

Byte sequence	1	2	3	4
Bits	1 to 8	9 to 16	17 to 24	25 to 32
Bit position in the byte	8 to 1	8 to 1	8 to 1	8 to 1

10.1.2 Pad bytes

Pad bytes are 8-bit bytes having a bit pattern consisting of eight ZEROs.

10.2 Frame

A frame shall be a section across all 18 tracks which contain logically related 8-bit bytes, one byte per track. Each byte in a frame is recorded along a track and is represented by a 9-bit pattern (see 10.5).

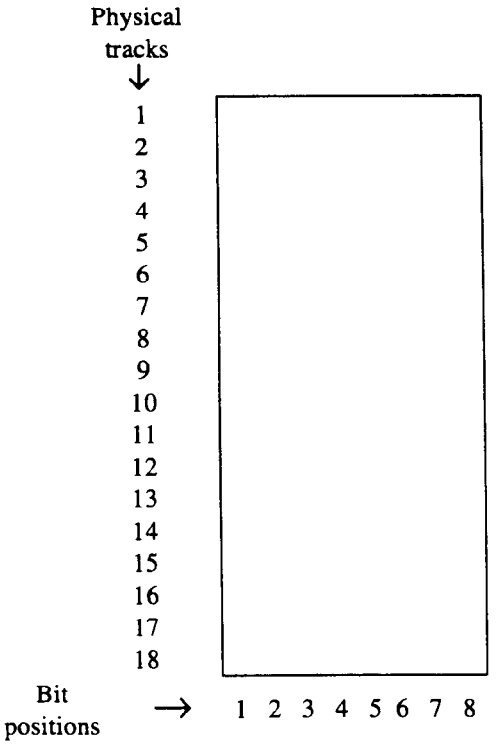

Figure 19 - Frame

10.3 Data Block

A Data Block shall contain at least 5 and at most 32 772 Data bytes.

Note - The interchange of cartridges recorded with larger Data Blocks requires agreement between the interchanging parties.

Copyright International Organization for Standardization
Provided by IHS under license with ISO
No reproduction or networking permitted without license from IHS
Not for Resale

A Data Block shall have the following structure:

- First 2 frames:
  Prefix
- Further frames up to 2 340 frames grouped in clusters:
  Data Frames
- Next frames, up to 2 frames:
  Residual Frame 1 and Residual Frame 2, or Residual Frame 2 only
- Last 2 frames:
  Suffix.

10.3.1 Prefix

The prefix shall consist of two frames containing pad bytes in each track.

10.3.2 Data Frames

Each Data Frame shall consist of (see figure 20)

- the first 7 Data bytes recorded in odd tracks 1 to 13;
- the next 7 Data bytes recorded in even tracks 2 to 14;
- a Diagonal Redundancy Check byte (DRC-A) recorded in track 15 (see 10.4.1 and 10.4.3);
- a Vertical Redundancy Check byte (VRC-A) recorded in track 17 (see 10.4.2 and 10.4.3);
- a Diagonal Redundancy Check byte (DRC-B) recorded in track 16 (see 10.4.1 and 10.4.3);
- a Vertical Redundancy Check byte (VRC-B) recorded in track 18 (see 10.4.2 and 10.4.3).

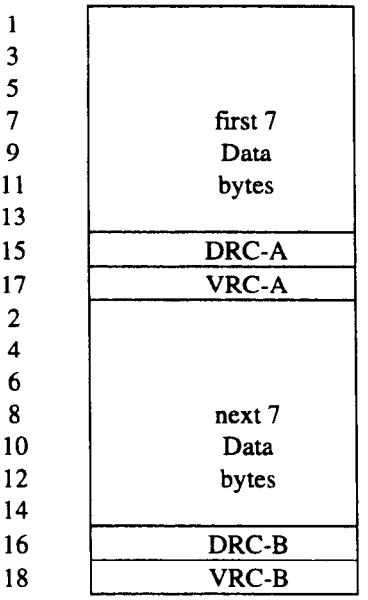

Figure 20 - Data Frame

The Data Frames are grouped in clusters as follows (see figure 21)

- the first cluster shall contain up to 69 frames of Data bytes;
- the next clusters, if provided, shall each contain 71 frames of Data bytes;
- the last cluster shall contain up to 71 frames of Data bytes.

Copyright International Organization for Standardization
Provided by IHS under license with ISO
No reproduction or networking permitted without license from IHS
Not for Resale

Prefix	1st Data Cluster	2nd Data Cluster		Last Data Cluster	Residual 1	Residual 2	Suffix
2 frames	69 frames	71 frames		up to 71 frames	1 frame	1 frame	2 frames

Figure 21 - Data Block

10.3.3 Residual Frame 1

If after the last Data Frame of the last Data cluster 12 or 13 Data bytes remain to be recorded, there shall be a Residual Frame 1. If the number of remaining Data bytes is less than 12 there shall be no Residual Frame 1.

The structure of the Residual Frame 1 shall be

- 12 or 13 Data bytes;
- 1 or 2 pad bytes, depending on the number of remaining Data bytes;
- in tracks 15 and 17 the DRC-A and the VRC-A, respectively;
- in tracks 16 and 18 the DRC-B and the VRC-B, respectively.

1 3 5 7 9 11 13	7 Data bytes
15	DRC-A
17	VRC-A
2 4 6 8 10	5 Data bytes
12	1 Data or Pad byte
14	1 Pad byte
16	DRC-B
18	VRC-B

Figure 22 - Residual Frame 1

10.3.4 Residual Frame 2

If there is no Residual Frame 1, i.e. if there are eleven or less remaining Data bytes, these Data bytes followed by sufficient pad bytes to total 11 bytes shall be recorded in odd tracks 1 to 13 and even tracks 2 to 8. If there are no remaining Data bytes, the 4 Block-ID bytes shall be recorded in odd tracks 1 to 7, followed by pad bytes in odd tracks 9 to 13 and even tracks 2 to 8.

If there is a Residual Frame 1, odd tracks 1 to 13 and even tracks 2 to 8 shall be recorded with pad bytes.

In either case:

- Track 10 shall be recorded with the Residual byte (see 10.3.4.1);
- Track 12 and 14 with the CRC byte 1 and the CRC byte 2, respectively (see 10.3.4.2);
- Tracks 15 and 17 with the DRC-A and the VRC-A, respectively;
- Tracks 16 and 18 with the DRC-B and the VRC-B respectively.

Copyright International Organization for Standardization
Provided by IHS under license with ISO
No reproduction or networking permitted without license from IHS
Not for Resale

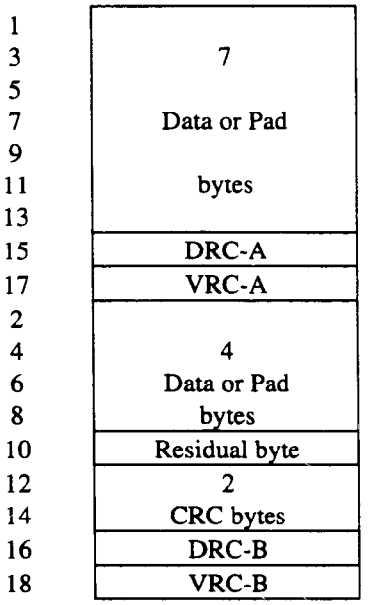

Figure 23 - Residual Frame 2

10.3.4.1 Residual byte

The Residual byte shall be recorded in track 10 of the Residual Frame 2. Its bits are numbered from 1 (most significant) to 8 (least significant).

Bits 1 and 2 shall be unspecified, they can be a ONE or a ZERO.

Bits 3 and 4 shall be ONEs.

Bits 5 to 8 shall express in binary notation the total number of pad bytes in the Residual Frame(s).

The allocation of bits to the bit positions in the Residual byte shall be

Bit 1 to 8

Bit position 8 to 1

10.3.4.2 Cyclic Redundancy Check character (CRC)

The 16-bit CRC shall be represented by two bytes recorded in tracks 12 and 14 of the Residual Frame 2. The CRC shall be computed from the generator polynomial.

$$x^{16} + x^{15} + x^8 + x + 1$$

The CRC is computed over the User bytes, the Block-ID bytes, the pad bytes and the Residual bytes. It does not include the ECC bytes.

The bits of the bytes of the CRC shall be processed starting with bit 1, i.e. the least-significant bit and ending with bit 8, i.e. the most significant bit.

Note - As this polynomial is symmetrical it yields the same value when read in either direction.

The allocations of bits to bit positions in the two CRC bytes is

Table 4 - CRC bytes

	CRC Byte 1	CRC Byte 2
Bits	9 to 16	1 to 8
Bit position	8 to 1	8 to 1

Copyright International Organization for Standardization
Provided by IHS under license with ISO
No reproduction or networking permitted without license from IHS
Not for Resale

10.3.5 Summary of requirements for Residual Frames

Table 5 summarizes the requirements for Residual Frame 1 and Residual Frame 2.

Table 5 - Requirements for Residual Frames

Number of Data bytes remaining after the last complete Data Frame		Residual Frame 1			Residual Frame 2				
User bytes	Block -ID bytes	User bytes	Block -ID bytes	Pad bytes	User bytes	Block -ID bytes	Pad bytes	Residual bytes	CRC bytes
0	0				0	0	11	1	2
0	1				0	1	10	1	2
0	2				0	2	9	1	2
0	3		No		0	3	8	1	2
0	4		Residual		0	4	7	1	2
1	4		Frame 1		1	4	6	1	2
2	4				2	4	5	1	2
3	4				3	4	4	1	2
4	4				4	4	3	1	2
5	4				5	4	2	1	2
6	4				6	4	1	1	2
7	4				7	4	0	1	2
8	4	8	4	2	0	0	11	1	2
9	4	9	4	1	0	0	11	1	2

10.3.6 Suffix

The Suffix shall consist of two frames containing:

- in odd tracks 1 to 13 : pad bytes
- in track 15 : DRC-A
- in track 17 : VRC-A
- in even tracks 2 to 14 : pad bytes
- in track 16 : DRC-B
- in track 18 : VRC-B

10.4 Error Correcting Code (ECC)

The error correcting code yields check bits:

- the Diagonal Redundancy Check (DRC)
- the Vertical Redundancy Check (VRC).

Computation of the DRCs and VRCs starts with the Prefix and ends with the Suffix.

In 10.4.1 and 10.4.2 the following notation is used:

Tn_m = the m-th bit of the n-th track

Copyright International Organization for Standardization
Provided by IHS under license with ISO
No reproduction or networking permitted without license from IHS
Not for Resale

10.4.1 Diagonal Redundancy Check (DRC)

The two DRCs shall be recorded in tracks 15 and 16, respectively. The bits in each of these tracks shall be computed from the bits in all other tracks, except tracks 17 and 18. The m-th bit in each of these tracks is specified by

$$\text{m-th bit of track 15} = \left\{ \sum_{n=0}^{6} T(2n+1)_{m-n-1} + \sum_{n=1}^{8} T(2n)_{m-n-7} \right\} \quad \text{(modulo 2)}$$

$$\text{m-th bit of track 16} = \left\{ \sum_{n=0}^{6} T(2n+1)_{m+n-14} + T(15)_{m-15} + \sum_{n=1}^{7} T(2n)_{m+n-8} \right\} \quad \text{(modulo 2)}$$

10.4.2 Vertical Redundancy Check (VRC)

The two VRCs shall be recorded in tracks 17 and 18, respectively. The bits in each of these tracks shall be computed from the bits of the eight other tracks having the same index parity. The m-th bit in each of these tracks is specified by

$$\text{m-th bit of track 17} = \left\{ \sum_{n=0}^{7} T(2n+1)_{m} \right\} \quad \text{(modulo 2)}$$

$$\text{m-th bit of track 18} = \left\{ \sum_{n=1}^{8} T(2n)_{m} \right\} \quad \text{(modulo 2)}$$

10.4.3 ECC Format

In each frame the eight bits of each DRC and each VRC shall be considered as 8-bit Check bytes.

Copyright International Organization for Standardization
Provided by IHS under license with ISO
No reproduction or networking permitted without license from IHS
Not for Resale

10.4.4 Summary of ECC

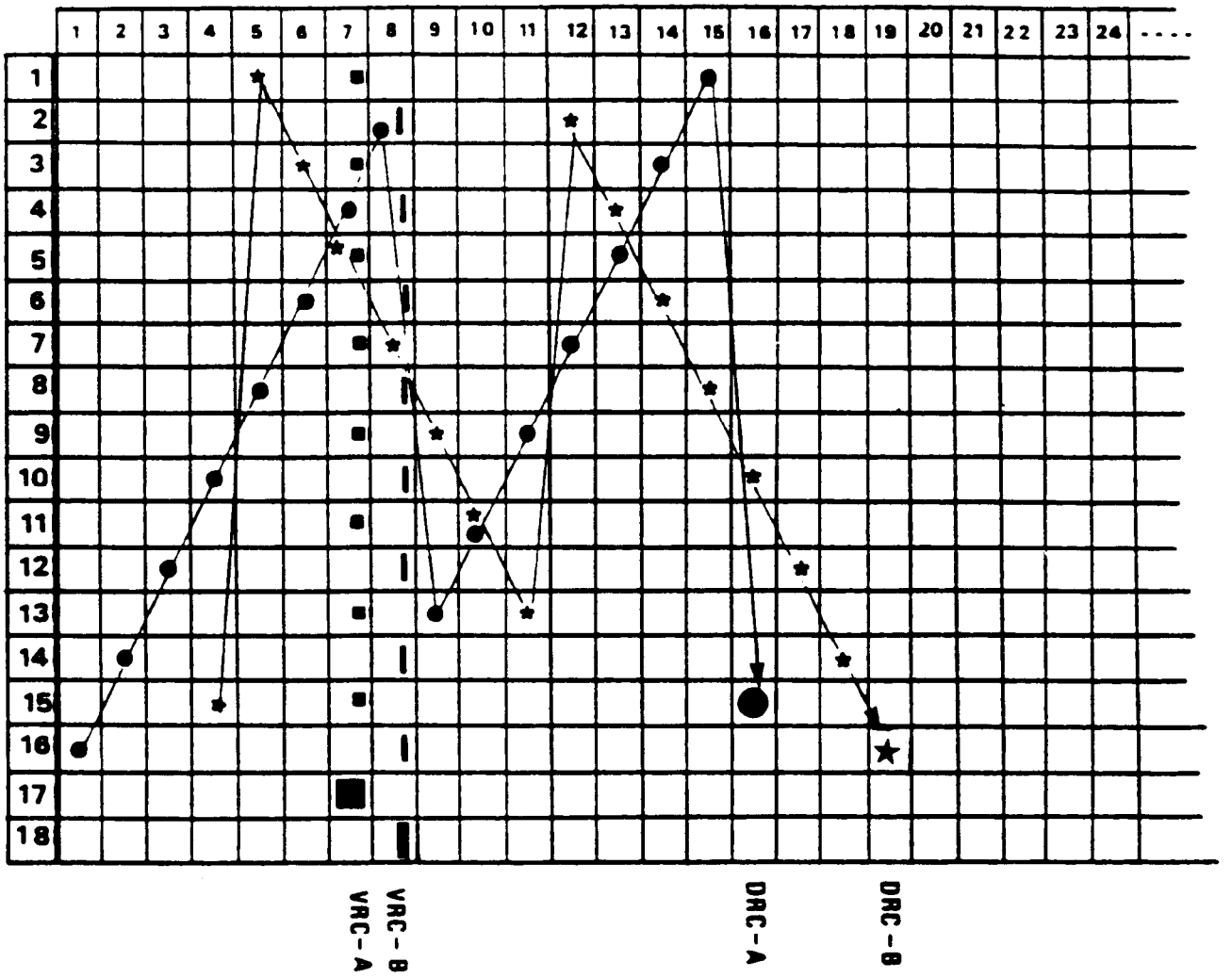

● bit of the DRC-A

■ bit of the VRC-A

★ bit of the DRC-B

▌ bit of the VRC-B

Figure 24 - Summary of ECC

Bibliography

For a complete description of this ECC schema, see A.M. PATEL: Adaptive cross parity (AXP) code for a high-density magnetic tape subsystem, in IBM Journal of Research and Development, Vol. 29, Number 6 of November 1985.

Copyright International Organization for Standardization
Provided by IHS under license with ISO
No reproduction or networking permitted without license from IHS
Not for Resale

10.5 Recording of 8-bit bytes on the tape

Each 8-bit byte in the Prefix, in the Data Frames, in the Residual Frame(s) and in the Suffix shall be represented by a 9-bit pattern on the tape.

Annex F specifies the 9-bit pattern representing each 8-bit byte. The bit of the 9-bit pattern in the highest bit position shall be recorded first.

10.6 Recorded Data Block

When recorded on the tape each Data Block shall have the following structure and be called a Recorded Data Block.

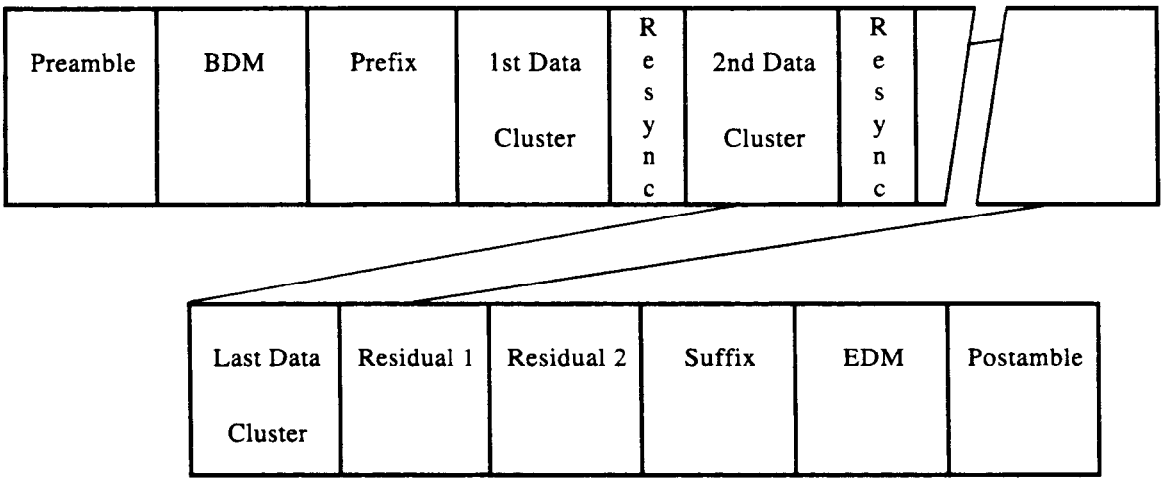

Figure 25 - Recorded Data Block

10.6.1 Preamble

The Preamble shall consist of between 9 and 13 frames recorded with the 9-bit pattern 111111111 in all tracks.

10.6.2 Beginning of Data Mark (BDM)

The BDM shall consist of two frames recorded with the 9-bit pattern 100010001 in all tracks.

10.6.3 Resync Control Frame

A Resync Control Frame shall have the 9-bit pattern 100010001 in all tracks. A Resync Control Frame shall be recorded after each 71 frames starting with the Prefix frames. If the Resync Control Frame would immediately precede the EDM, it shall not be recorded.

10.6.4 End of Data Mark (EDM)

The EDM shall consist of two frames recorded with the 9-bit pattern 100010001 in all tracks.

10.6.5 Postamble

The Postamble shall consist of between 9 and 13 frames recorded with the 9-bit pattern 111111111 in all tracks.

10.7 Data density

Due to the ECC bytes, the 8-bit to 9-bit conversion and to the Resync Control Frames the maximum density of data bytes is

$$14 \times 972 \times \frac{1}{8} \times \frac{8}{9} \times \frac{71}{72} = 1\,491 \text{ data bytes per mm}$$

where

14 : the number of data bytes per frame;

972 : the number of flux transitions per mm for the all ONEs density;

1/8 : the inverse value of the number of bits per byte;

8/9 : corresponds to the recording scheme of 10.5;

71/72 : corresponds to the Resync Control Frames.

Copyright International Organization for Standardization
Provided by IHS under license with ISO
No reproduction or networking permitted without license from IHS
Not for Resale

11 Tape format

The format of the tape is defined by the following control blocks separating and/or qualifying the recorded Data Blocks.

- the Density Identification Burst;
- the ID Separator Burst;
- Interblock Gaps;
- Erase Gaps;
- Tape Marks.

The five control blocks have the following recording characteristics:

i) The 18 tracks are divided into six zones

- zone A : Tracks 1, 7, 13
- zone B : Tracks 2, 8, 14
- zone C : Tracks 3, 9, 15
- zone D : Tracks 4, 10, 16
- zone E : Tracks 5, 11, 17
- zone F : Tracks 6, 12, 18

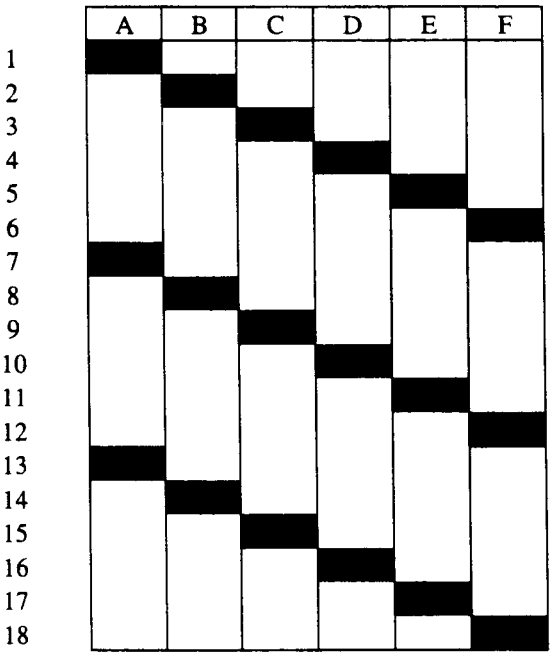

Figure 26 - Zones

ii) The tracks of each zone are recorded either with the all ONEs pattern or with the repeated 6-bit pattern 100000 called tone.

11.1 Density Identification Burst

The Density Identification Burst shall be characterized by

- all ONEs in zones A, C, F;
- tone in zones B, D, E.

Its length shall be

Nominal : 2 375 mm
Minimum : 2 250 mm
Maximum : 3 060 mm

The Density Identification Burst shall be the first recording on the tape.

Copyright International Organization for Standardization
Provided by IHS under license with ISO
No reproduction or networking permitted without license from IHS
Not for Resale

11.2 ID Separator Burst

The ID Separator Burst shall be characterized by

- all ONEs in all zones.

Its length shall be

Nominal : 2,0 mm
Minimum : 1,9 mm
Maximum : 2,1 mm

11.3 Interblock Gaps

The Interblock Gaps shall be characterized by

- all ONEs in zones A, D, F;
- tone in zones B, C, E.

The length of each Interblock Gaps shall be

Nominal : 2,0 mm
Minimum : 1,6 mm
Maximum : 3,0 mm

Any discontinuity across all tracks in an Interblock Gap (for example due to start/stop mode) shall not be greater than 0,03 mm. Such discontinuity shall not occur less than 0,5 mm before the Preamble of a recorded Data Block or within 0,5 mm after the Postamble of such a block.

An Interblock Gap shall be recorded immediately after the ID Separator Burst. It shall also be recorded before and after each recorded Data Block, each Erase Gap (see 11.4) and each Tape Mark (see 11.5), except after the last Tape Mark on the tape (see 11.7).

11.4 Erase Gaps

Erase Gaps shall be characterized by

- all ONEs in zones B, C, F;
- tone in zones A, D, E.

Erase Gaps shall be recorded over a length of tape where an unsuccessful write operation occurred or upon an erase instruction.

11.4.1 Normal Erase Gaps

The length of a Normal Erase Gap shall be

Nominal : 7,8 mm
Minimum : 7,4 mm
Maximum : 8,2 mm

It is permitted to write up to 20 successive Normal Erase Gaps, separated by Interblock Gaps, to cover a defective area. A defective area is an area on the tape where the requirements of 6.19 are not met.

11.4.2 Elongated Erase Gaps

The length of an Elongated Erase Gap shall be

Maximum : 200 mm

An Elongated Erase Gap shall be recorded when a Normal Erase Gap and/or the following Interblock Gap are not recognized as such. Within an Elongated Erase Gap partial Interblock Gaps of not more than 1 mm may appear.

11.5 Tape Marks

Tape Marks shall be characterized by

- all ONEs in zones B, D, E;
- tone in zones A, C, F.

Copyright International Organization for Standardization
Provided by IHS under license with ISO
No reproduction or networking permitted without license from IHS
Not for Resale

The length of each Tape Mark shall be

Nominal : 1,0 mm
Minimum : 0,7 mm
Maximum : 1,3 mm

One or more Tape Marks may be used to delimit sequences of recorded Data Blocks.

11.6 Relationship between Interblock Gaps, Erase Gaps and Tape Marks

Where an Interblock Gap precedes or follows an Erase Gap or a Tape Mark, in six of the nine tracks the tone pattern of one of these control blocks shall extend into the ONE bits pattern of the other as specified below (see figure 27).

11.6.1 Interblock Gap followed by a Tape Mark

On tracks 1, 6, 7, 12, 13 and 18:

– 18 tone bits replace the last 18 ONE bits of the Interblock Gap.

On tracks 2, 5, 8, 11, 14 and 17:

– 18 tone bits replace the first 18 ONE bits of the Tape Mark.

11.6.2 Tape Mark followed by an Interblock Gap

On tracks 1, 6, 7, 12, 13 and 18:

– 18 tone bits replace the first 18 ONE bits of the Interblock Gap.

On tracks 2, 5, 8, 11, 14 and 17:

– 18 tone bits replace the last 18 ONE bits of the Tape Mark.

11.6.3 Interblock Gap followed by an Erase Gap

On tracks 1, 4, 7, 10, 13 and 16:

– 18 tone bits replace the last 18 ONE bits of the Interblock Gap.

On tracks 2, 3, 8, 9, 14 and 15:

– 18 tone bits replace the first 18 ONE bits of the Erase Gap.

11.6.4 Erase Gap followed by an Interblock Gap

On tracks 1, 4, 7, 10, 13 and 16:

– 18 tone bits replace the first 18 ONE bits of the Interblock Gap.

On tracks 2, 3, 8, 9, 14 and 15:

– 18 tone bits replace the last 18 ONE bits of the Erase Gap.

--`,,```,,,,````-`-`,,`,,`,`,,`---

Copyright International Organization for Standardization
Provided by IHS under license with ISO
No reproduction or networking permitted without license from IHS
Not for Resale

11.6.5 Summary of the relationship between Interblock Gaps, Erase Gaps and Tape Marks

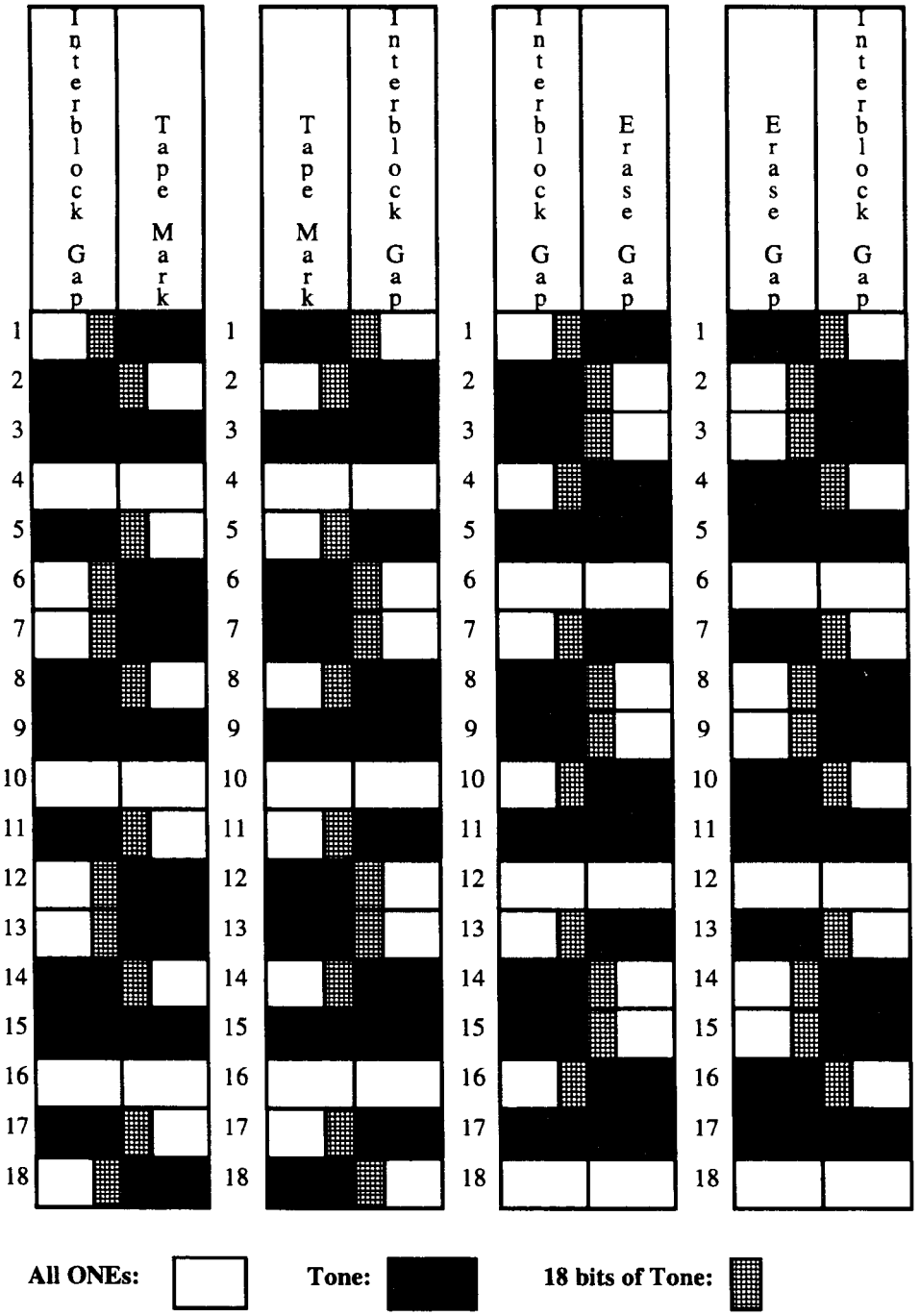

Figure 27 - Summary of the relationship between Gaps and Tape Marks

11.7 First and last recording on the tape

The first recording on the tape shall be a Density Identification Burst. It shall begin not more than 1,34 m from the leader block of the cartridge and end not less than 3,28 m from it.

The last recording on the tape shall be a Tape Mark optionally followed by an Interblock Gap. It shall end not less than 4,3 m from the junction of the tape to the hub of the cartridge.

Copyright International Organization for Standardization
Provided by IHS under license with ISO
No reproduction or networking permitted without license from IHS
Not for Resale

11.8 Summary of the tape format

11.8.1 Characteristics of recording other than recorded Data Blocks

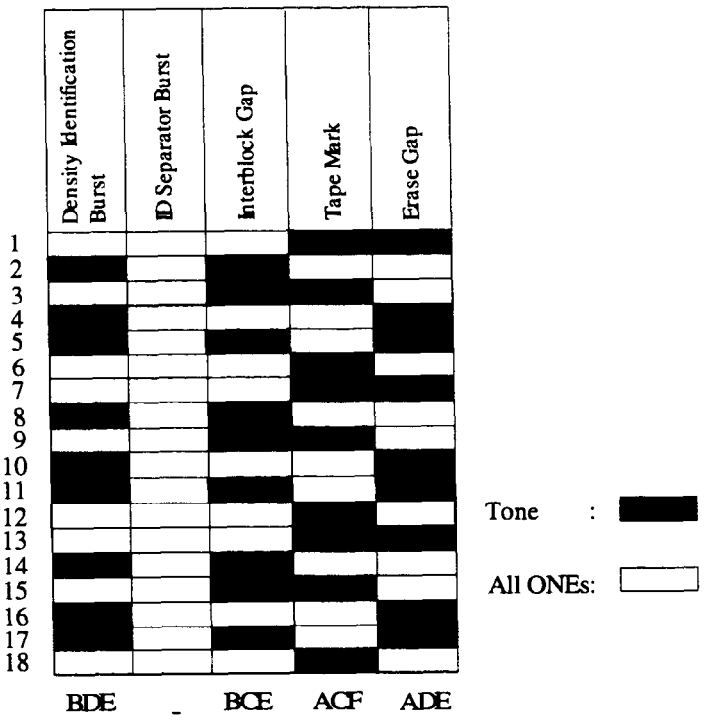

Figure 28 - Recordings other than recorded Data Blocks

11.8.2 Arrangement of recording on the tape

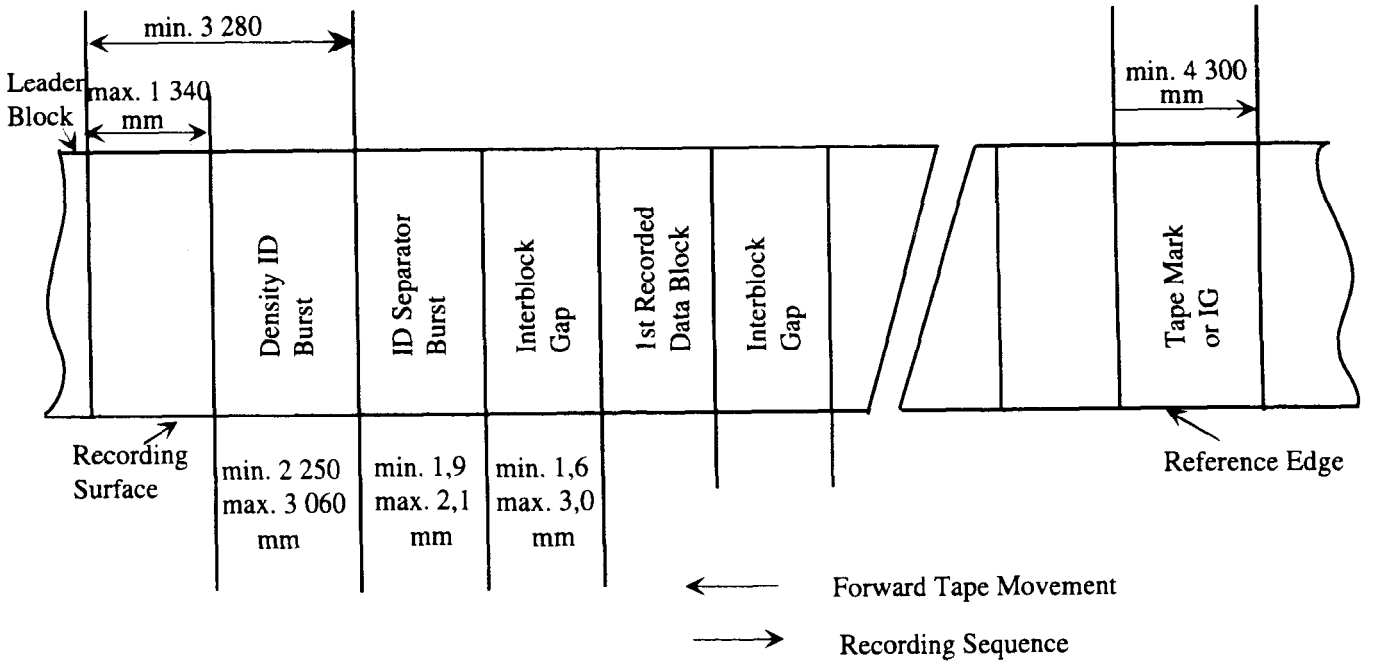

Figure 29 - Tape layout

Copyright International Organization for Standardization
Provided by IHS under license with ISO
No reproduction or networking permitted without license from IHS
Not for Resale

Copyright International Organization for Standardization
Provided by IHS under license with ISO
No reproduction or networking permitted without license from IHS
Not for Resale

Annex A

(informative)

Recommendations for transportation

A.1 Environment

It is recommended that during transportation the cartridges are kept within the following conditions:

A.1.1 Unrecorded cartridges

temperature	: -23 °C to 48 °C
relative humidity	: 5 % to 100 %
wet bulb temperature	: 26 °C max.
duration	: 10 consecutive days max.

There shall be no condensation in or on the cartridge.

A.1.2 Recorded cartridges

temperature	: 5 °C to 32 °C
relative humidity	: 5 % to 80 %
wet bulb temperature	: 26 °C max.

There shall be no condensation in or on the cartridge.

A.2 Hazards

Transportation of recorded cartridges involves three basic potential hazards.

A.2.1 Impact loads and vibration

The following recommendations should minimize damage during transportation.

i) Avoid mechanical loads that would distort the cartridge shape.

ii) Avoid dropping the cartridge more than 1 m.

iii) Cartridges should be fitted into a rigid box containing adequate shock-absorbant material.

iv) The final box must have a clean interior and a construction that provides sealing to prevent the ingress of dirt and water.

v) The orientation of the cartridges within the final box should be such that their axes are horizontal.

vi) The final box should be clearly marked to indicate its correct orientation.

A.2.2 Extremes of temperature and humidity

i) Extreme changes in temperature and humidity should be avoided whenever possible.

ii) Whenever a cartridge is received it should be conditioned in the operating environment for a period of at least 24 hours.

A.2.3 Effects of stray magnetic fields

A nominal spacing of not less than 80 mm should exist between the cartridge and the outer surface of the shipping container. This should minimize the risk of corruption.

Copyright International Organization for Standardization
Provided by IHS under license with ISO
No reproduction or networking permitted without license from IHS
Not for Resale

Annex B

(informative)

Inhibitor tape

Any tape that reduces the performance of the tape drive or other tapes is called an inhibitor tape. Certain tape characteristics can contribute to poor tape drive performance. These characteristics include: high abrasiveness, high static friction to tape path components, poor edge conditions, excessive tape wear debris, interlayer slippage, transfer of the oxide coating to the back of the next tape layer, separation of tape constituents causing deposits that may lead to tape sticking or poor performance of other tapes. Tapes that have these characteristics may not give satisfactory performance and can result in excessive errors.

Tapes to be used in this cartridge should not be inhibitor tapes.

Copyright International Organization for Standardization
Provided by IHS under license with ISO
No reproduction or networking permitted without license from IHS
Not for Resale

Annex C

(normative)

Tape abrasivity measurement procedure

C.1 General

Tape abrasivity is the tendency of the tape to wear the tape transport.

C.2 Test fixture

Install a clean ferrite wear bar made as shown in figure C.1 on a holding fixture similar to that shown in figure C.2. The test edge facing upward shall be unworn and free of chips or voids greater than 1 µm in size. The radius of the test edge must not be greater than 13 µm.

The ferrite bar shall be composed of single-phase polycrystaline ferrite. It shall have the following weight percentages:

ZnO 22 %
NiO 11 %
Fe_2O_3 67 %

Its average grain size shall be 7,2 µm ± 2 µm. Its density shall not be less than 5,32 g/cm^3.

NOTE - Such material should be available as Sumitomo H4R or H4R3 which is the trade-name of a product supplied by Sumitomo Special Metals Div. Torrance California, USA.

The surface finish on all four sides of the bar shall be at least of roughness grade N2 (ISO 1302).

C.3 Procedure

Install the test fixture (clause C.2) on a tape transport so that the wrap angle of the tape over the bar is 8° on each side for 16° of total wrap.

Set the tape tension at the bar at 1,4 N.

With a tape speed of 1 m/s, make one pass of the tape over the wear bar. The length of tape passing over the wear bar shall be 520 m ± 2,5 m. This length may be segmented into the appropriate number of cartridges.

Remove the holding fixture from the tape transport and measure the length of the flat worn on the wear bar. This measurement is most easily made using a microscope of known magnification, a camera, and a reference reticule. A magnification of X300 or higher is recommended.

Carry out the measurements across the 1/4, 1/2 and 3/4 points of the 12,65 mm width of the wear pattern. Take the average length calculated from the three readings. Figure C.3 shows a typical wear pattern and the points of measurements.

Copyright International Organization for Standardization
Provided by IHS under license with ISO
No reproduction or networking permitted without license from IHS
Not for Resale

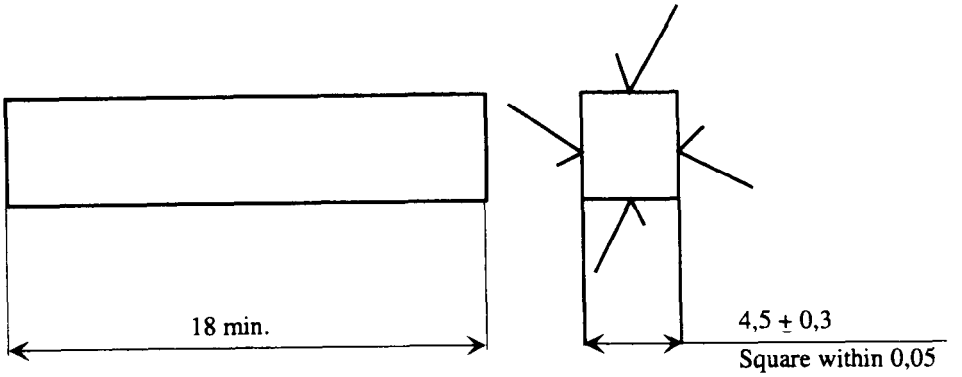

Figure C.1 - Ferrite Wear Bar

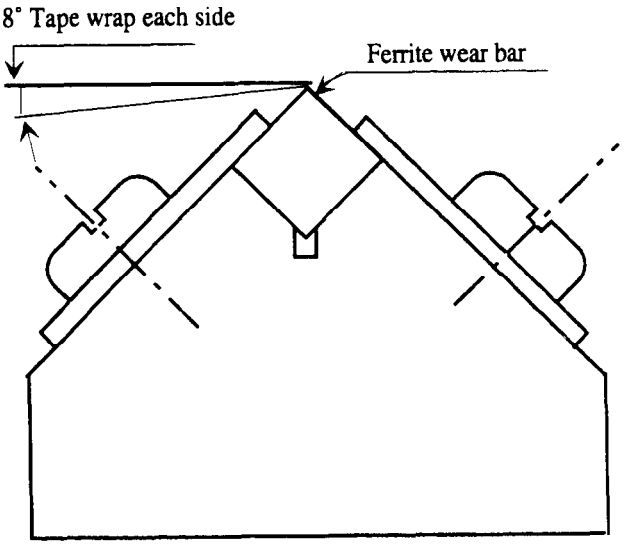

Figure C.2 - Wear Bar Holding Fixture

Copyright International Organization for Standardization
Provided by IHS under license with ISO
No reproduction or networking permitted without license from IHS
Not for Resale

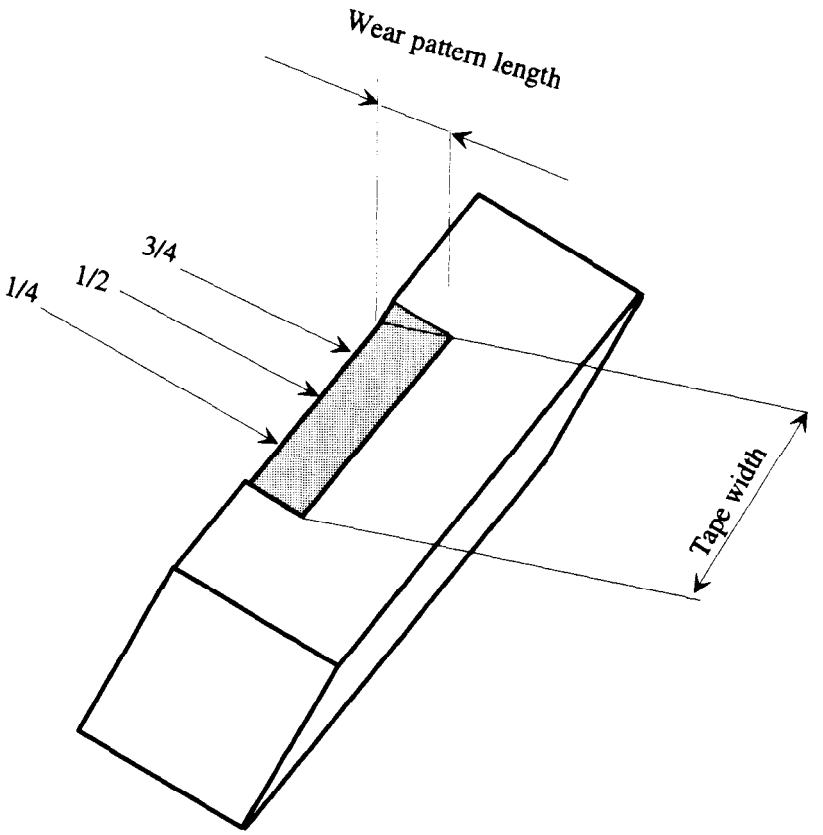

Figure C.3 - Typical Wear Pattern. Ferrite Bar following abrasivity test illustrating three locations for wear length measurement (the amount of wear is exaggerated for clarity).

Copyright International Organization for Standardization
Provided by IHS under license with ISO
No reproduction or networking permitted without license from IHS
Not for Resale

Annex D

(informative)

Recommendations on tape durability

When delivered from the supplier the tape of a new cartridge should meet the following requirements.

Testing and measurements performed on the cartridge using an appropriate drive are described below. The test shall be performed in the operating environment (see 5.2) for the tape and the tape drive.

D.1 Short length durability/reliability

D.1.1 The short-length durability/reliability is the ability of the tape to withstand the wearing action encountered during repeated access to a short file of data. A permanent missing pulse is one that persists for ten consecutive read passes.

D.1.2 No permanent coincident missing pulse zones are permitted for a minimum of 40 000 read forward passes. In addition, no more than one permanent coincident missing pulse zone is permitted on the average for each 80 000 read forward passes.

D.1.3 Procedure

Ensure the tape drive is clean before starting this test.

As a test sample, use a minimum of four cartridges, written in the area of the tape free of coincident missing pulse zones. The area to be tested on each cartridge should start approximately 10 m or 500 records of 25 000 bytes each past the tape load point. The test area should consist of 1 m or 50 such records.

Each test cycle consists of starting at the beginning of the test area and accessing each record in the test area before returning to the beginning of the test area. For a complete test, 80 000 cycles should be made on each cartridge. Ten attempts to read forward should be made for each coincident missing pulse zone before a permanent coincident missing pulse zone is logged.

Tape path cleaning between passes is not permitted for this test.

D.2 Long length durability/reliability

D.2.1 The long-length durability/reliability is the ability of the tape to resist the wearing action encountered while cycling full-length passes on a tape drive. This is not a test for end of life for the tape.

D.2.2 The cartridges should meet the following requirements.

i) The number of coincident missing pulse zones for the first 200 full length passes should not be more than 6 per 165 m of tape.

ii) No 165 m length of tape should have more than 12 coincident missing pulse zones on any single pass.

D.2.3 Procedure

Clean the tape drive before starting this test. Tape path cleaning between passes is not permitted for this test. The whole length of tape should be written continuously or with records of at least 16 000 bytes.

Copyright International Organization for Standardization
Provided by IHS under license with ISO
No reproduction or networking permitted without license from IHS
Not for Resale

Annex E

(normative)

Pre-recording condition

E.1 Explanation

The pre-recording condition is the remanent magnetic moment of the recording surface. The remanent magnetic moment is the magnetic moment of the recording surface in the absence of any magnetizing field. The maximum remanent magnetic moment of the recording surface is the remanent magnetic moment of the recording surface after subjecting the recording surface to a magnetizing field of 350 kA/m. The recording surface may have been subjected to a high magnetizing field, for example during manufacture, during testing, or by use on a magnetic recording system that leaves areas of surface that have been d.c. erased or contain low density transitions. As the resulting high magnetic moment can impair the operation of the recording system it is necessary to ensure that, before recording, the remanent state has been reduced to, at most, the level specified in 6.17.

E.2 Procedure

The magnetic moment shall be measured using a vibrating sample magnetometer (VSM), as follows:

i) Cut a circular sample of diameter between 6 mm to 12 mm from the parent tape.

ii) Identify the longitudinal (coating) direction of the sample.

iii) Mount the test piece on the VSM sample holder with the longitudial direction aligned from pole to pole.

iv) Centre the test piece between the poles in accordance with the VSM manufacturer's instructions.

The test piece shall not be exposed to any stray magnetic fields greater than 4 kA/m during preparation or mounting.

v) Measure the remanent magnetic moment of the test piece.

vi) Rotate the test piece 180° and repeat steps iv) and v).

vii) Cycle the test piece four times around the hysteresis loop using a peak field of 350 kA/m.

viii) Measure the positive and negative values of maximum remanent magnetic moment.

ix) Compare the ratio of values obtained in steps v) and viii).

Copyright International Organization for Standardization
Provided by IHS under license with ISO
No reproduction or networking permitted without license from IHS
Not for Resale

Annex F

(normative)

Representation of 8-bit bytes by 9-bit patterns

The 8-bit patterns are recorded with the most-significant bit to the left and the least-significant bit to the right.

The 9-bit patterns are recorded with the leftmost-bit first and the rightmost bit last.

8-bit byte	9-bit pattern	8-bit byte	9-bit pattern
00000000	011001011	00110000	011100011
00000001	011001001	00110001	001100011
00000010	001001101	00110010	001110010
00000011	101100011	00110011	001110011
00000100	011001010	00110100	010100011
00000101	101100101	00110101	001110101
00000110	101100110	00110110	001110110
00000111	101100111	00110111	001110111
00001000	011001111	00111000	111100011
00001001	101101001	00111001	001111001
00001010	101101010	00111010	001111010
00001011	101101011	00111011	001111011
00001100	011001110	00111100	110100011
00001101	101101101	00111101	001111101
00001110	101101110	00111110	001111110
00001111	101101111	00111111	001111111
00010000	001001011	01000000	010001011
00010001	001001001	01000001	010001001
00010010	011001101	01000010	010010010
00010011	100100011	01000011	010010011
00010100	001001010	01000100	010001010
00010101	100100101	01000101	010010101
00010110	100100110	01000110	010010110
00010111	100100111	01000111	010010111
00011000	001001111	01001000	010001111
00011001	100101001	01001001	010011001
00011010	100101010	01001010	010011010
00011011	100101011	01001011	010011011
00011100	001001110	01001100	010001110
00011101	100101101	01001101	010011101
00011110	100101110	01001110	010011110
00011111	100101111	01001111	010011111
00100000	101001111	01010000	011100101
00100001	101001101	01010001	001100101
00100010	001010010	01010010	010110010
00100011	001010011	01010011	010110011
00100100	101001110	01010100	010100101
00100101	001010101	01010101	010110101
00100110	001010110	01010110	010110110
00100111	001010111	01010111	010110111

Copyright International Organization for Standardization
Provided by IHS under license with ISO
No reproduction or networking permitted without license from IHS
Not for Resale

00101000	101001011	01011000	111100101
00101001	001011001	01011001	010111001
00101010	001011010	01011010	010111010
00101011	001011011	01011011	010111011
00101100	101001010	01011100	110100101
00101101	001011101	01011101	010111101
00101110	001011110	01011110	010111110
00101111	001011111	01011111	010111111
01100000	011100110	10010000	011101001
01100001	001100110	10010001	001101001
01100010	011010010	10010010	100110010
01100011	011010011	10010011	100110011
01100100	010100110	10010100	010101001
01100101	011010101	10010101	100110101
01100110	011010110	10010110	100110110
01100111	011010111	10010111	100110111
01101000	111100110	10011000	111101001
01101001	011011001	10011001	100111001
01101010	011011010	10011010	100111010
01101011	011011011	10011011	100111011
01101100	110100110	10011100	110101001
01101101	011011101	10011101	100111101
01101110	011011110	10011110	100111110
01101111	011011111	10011111	100111111
01110000	011100111	10100000	011101010
01110001	001100111	10100001	001101010
01110010	011110010	10100010	101010010
01110011	011110011	10100011	101010011
01110100	010100111	10100100	010101010
01110101	011110101	10100101	101010101
01110110	011110110	10100110	101010110
01110111	011110111	10100111	101010111
01111000	111100111	10101000	111101010
01111001	011111001	10101001	101011001
01111010	011111010	10101010	101011010
01111011	011111011	10101011	101011011
01111100	110100111	10101100	110101010
01111101	011111101	10101101	101011101
01111110	011111110	10101110	101011110
01111111	011111111	10101111	101011111
10000000	111001011	10110000	011101011
10000001	111001001	10110001	001101011
10000010	100010010	10110010	101110010
10000011	100010011	10110011	101110011
10000100	111001010	10110100	010101011
10000101	100010101	10110101	101110101
10000110	100010110	10110110	101110110
10000111	100010111	10110111	101110111
10001000	111001111	10111000	111101011
10001001	100011001	10111001	101111001
10001010	100011010	10111010	101111010
10001011	100011011	10111011	101111011

--`,,```,,,,````-`-`,,`,,`,`,,`---
Copyright International Organization for Standardization
Provided by IHS under license with ISO
No reproduction or networking permitted without license from IHS
Not for Resale

10001100	111001110	10111100	110101011
10001101	100011101	10111101	101111101
10001110	100011110	10111110	101111110
10001111	100011111	10111111	101111111
11000000	110001011	11100000	011101110
11000001	110001001	11100001	001101110
11000010	110010010	11100010	111010010
11000011	110010011	11100011	111010011
11000100	110001010	11100100	010101110
11000101	110010101	11100101	111010101
11000110	110010110	11100110	111010110
11000111	110010111	11100111	111010111
11001000	110001111	11101000	111101110
11001001	110011001	11101001	111011001
11001010	110011010	11101010	111011010
11001011	110011011	11101011	111011011
11001100	110001110	11101100	110101110
11001101	110011101	11101101	111011101
11001110	110011110	11101110	111011110
11001111	110011111	11101111	111011111
11010000	011101101	11110000	011101111
11010001	001101101	11110001	001101111
11010010	110110010	11110010	111110010
11010011	110110011	11110011	111110011
11010100	010101101	11110100	010101111
11010101	110110101	11110101	111110101
11010110	110110110	11110110	111110110
11010111	110110111	11110111	111110111
11011000	111101101	11111000	111101111
11011001	110111001	11111001	111111001
11011010	110111010	11111010	111111010
11011011	110111011	11111011	111111011
11011100	110101101	11111100	110101111
11011101	110111101	11111101	111111101
11011110	110111110	11111110	111111110
11011111	110111111	11111111	111111111

Copyright International Organization for Standardization
Provided by IHS under license with ISO
No reproduction or networking permitted without license from IHS
Not for Resale

Annex G

(normative)

Measurement of bit shift

The equipment normally used for recording interchange cartridges shall be used for recording the tape under test.

The tape shall be in the pre-recording condition as defined in 6.17.

The tape shall be written in any start/stop mode compatible with system operation.

G.1 Read equipment

The tape shall be read on any tape transport in which the speed is within 1 % of nominal speed.

There are no absolute requirements on the output voltage from the read head. However, the head design and the tape speed shall be chosen to avoid problems from low signal-to-noise ratios.

- Read Head
  - Inductive head: The gap length shall be less than 0,63 µm.
  - Magneto-resistive head: The effective read gap, calculated from the geometric mean of the distances from the element to each shield, shall be less than 0,63 µm.
- Read Channel

  The frequency response of the head and read amplifier shall meet the following specification when tested with a wire placed close to and parallel to the read gap.

  For an inductive head, the overall response shall be within 1 dB from a + 6 dB/octave line over the frequency range corresponding to one twentieth of the ONEs frequency to 2,0 times the ONEs frequency. For example, a tape transport operated at 762 mm/s shall require a frequency range of 18,5 kHz to 740,7 kHz. The phase response shall be within 2° of a straight line over the same frequency range.

  For a magneto-resistive head, the overall response shall be within 1 dB of flat over the above frequency range and the phase response shall be within 2° of a straight line over the same frequency range.

  Response of either read channel shall roll off at 18 dB/octave starting at 2,0 times the ONEs frequency.

G.2 Measurement

The average bit cell length (l) is obtained from any pair of reference zero crossings (RZC) located on either side of the test zero crossing (TZC). A reference zero crossing is a ONE zero crossing with at least two adjacent ONE zero crossings on each side. The reference zero crossings shall not be more than 40 bit cells apart to keep the maximum error due to rate-of-change under 2 %.

Copyright International Organization for Standardization
Provided by IHS under license with ISO
No reproduction or networking permitted without license from IHS
Not for Resale

G.3 Data analysis

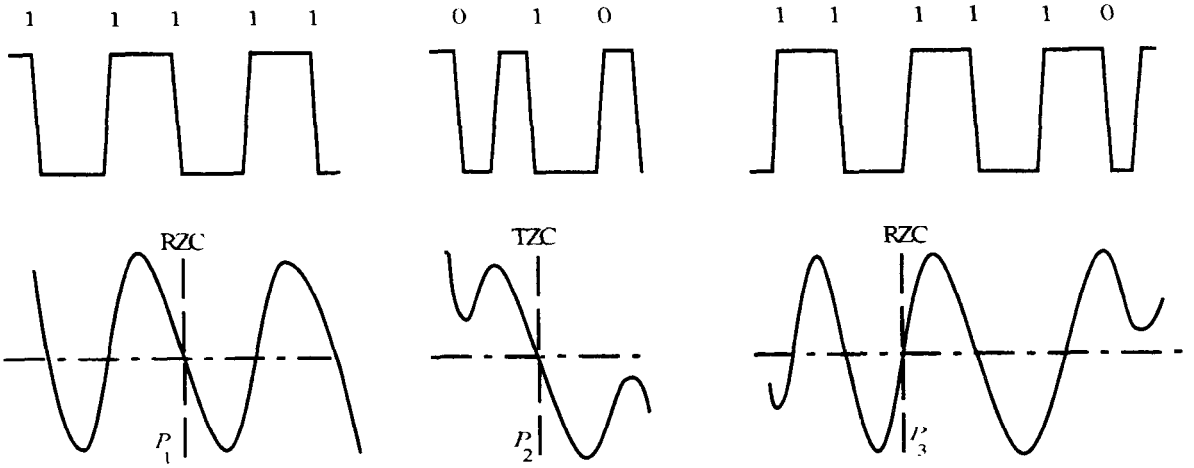

if n is the number of bit cells between reference zero crossings, the average bit cell length shall be

$$L = \frac{P_3 - P_1}{n}$$

where

P_n is the position of the n-th ONE zero crossing.

If there are m bit intervals between the first reference zero crossing and the test zero crossing, then

$$\text{Bit shift in } \% = \frac{\left|mL - (P_2 - P_1)\right|}{L}$$

Copyright International Organization for Standardization
Provided by IHS under license with ISO
No reproduction or networking permitted without license from IHS
Not for Resale

© ISO/IEC

ICS 35.220.20

Descriptors: data processing, information interchange, data recording devices, magnetic tapes, half-inch magnetic tapes, magnetic tape cartridges, specifications, dimensions, mechanical properties, physical properties, magnetic properties, formats, track formats, interchangeability.

Price based on 51 pages

Copyright International Organization for Standardization
Provided by IHS under license with ISO
No reproduction or networking permitted without license from IHS

Not for Resale