INTERNATIONAL STANDARD

ISO/IEC 9316

Second edition
1995-11-01

Information technology — Small Computer System Interface-2

Technologies de l'information — Interface «Small Computer System-2»

Reference number
ISO/IEC 9316:1995(E)

Copyright International Organization for Standardization
Provided by IHS under license with ISO
No reproduction or networking permitted without license from IHS

Not for Resale

Contents

	Page
1 Scope	1
2 Normative references	2
3 Definitions, symbols and abbreviations	3
3.1 Definitions	3
3.2 Symbols and abbreviations	5
4 General	6
4.1 Overview	6
4.2 Conventions	7
5 Physical characteristics	8
5.1 Physical description	8
5.2 Cable requirements	8
5.2.1 Single-ended cable	8
5.2.2 Differential cable	9
5.2.3 Cable requirements for fast synchronous data transfer	9
5.3 Connector requirements	9
5.3.1 Non-shielded connector requirements	9
5.3.1.1 Non-shielded connector alternative 1 - A cable	9
5.3.1.2 Non-shielded connector alternative 2 - A cable	10
5.3.1.3 Non-shielded connector - B cable	10
5.3.2 Shielded connector requirements	15
5.3.2.1 Shielded connector alternative 1 - A cable	15
5.3.2.2 Shielded connector alternative 2 - A cable	15
5.3.2.3 Shielded connector - B cable	15
5.3.3 Connector contact assignments	20

© ISO/IEC 1995
All rights reserved. Unless otherwise specified, no part of this publication may be reproduced or utilized in any form or by any means, electronic or mechanical, including photocopying and microfilm, without permission in writing from the publisher.

ISO/IEC Copyright Office • Case postale 56 • CH-1211 Genève 20 • Switzerland

Printed in Switzerland

Copyright International Organization for Standardization
Provided by IHS under license with ISO
No reproduction or networking permitted without license from IHS
Not for Resale

5.4 Electrical description 25
5.4.1 Single-ended alternative 25
5.4.1.1 Output characteristics 25
5.4.1.2 Input characteristics 25
5.4.2 Differential alternative 26
5.4.2.1 Output characteristics 26
5.4.2.2 Input characteristics 26
5.4.3 Terminator power 26
5.4.4 RESERVED lines 29
5.5 SCSI bus 30
5.6 SCSI bus signals 32
5.6.1 Signal values 33
5.6.2 OR-tied signals 33
5.6.3 Signal sources 33
5.7 SCSI bus timing 34
5.7.1 Arbitration delay 35
5.7.2 Assertion period 35
5.7.3 Bus clear delay 35
5.7.4 Bus free delay 35
5.7.5 Bus set delay 36
5.7.6 Bus settle delay 36
5.7.7 Cable skew delay 36
5.7.8 Data release delay 36
5.7.9 Deskew delay 36
5.7.10 Disconnection delay 36
5.7.11 Hold time 36
5.7.12 Negation period 36
5.7.13 Power-on to selection time 36
5.7.14 Reset to selection time 36
5.7.15 Reset hold time 37
5.7.16 Selection abort time 37
5.7.17 Selection time-out delay 37
5.7.18 Transfer period 37
5.8 Fast synchronous transfer option 37
5.8.1 Fast assertion period 37
5.8.2 Fast cable skew delay 37
5.8.3 Fast deskew delay 37
5.8.4 Fast hold time 37
5.8.5 Fast negation period 38

6 Logical characteristics 39
6.1 SCSI bus phases 39
6.1.1 BUS FREE phase 39
6.1.2 ARBITRATION phase 40
6.1.3 SELECTION phase 40
6.1.3.1 SELECTION time-out procedure 41
6.1.4 RESELECTION phase 41
6.1.4.1 RESELECTION 41
6.1.4.2 RESELECTION time-out procedure 42
6.1.5 Information transfer phases 42
6.1.5.1 Asynchronous information transfer 43
6.1.5.2 Synchronous data transfer 43
6.1.5.3 Wide data transfer 44

Copyright International Organization for Standardization
Provided by IHS under license with ISO
No reproduction or networking permitted without license from IHS
Not for Resale

6.1.6 COMMAND phase 46
6.1.7 Data phase 46
6.1.7.1 DATA IN phase 46
6.1.7.2 DATA OUT phase 46
6.1.8 STATUS phase 46
6.1.9 Message phase 46
6.1.9.1 MESSAGE IN phase 46
6.1.9.2 MESSAGE OUT phase 46
6.1.10 Signal restrictions between phases 47
6.2 SCSI bus conditions 47
6.2.1 Attention condition 47
6.2.2 Reset condition 48
6.2.2.1 Hard reset alternative 49
6.2.2.2 Soft reset alternative 49
6.3 SCSI bus phase sequences 50
6.4 SCSI pointers 51
6.5 Message system description 52
6.6 Messages 55
6.6.1 ABORT 55
6.6.2 ABORT TAG 55
6.6.3 BUS DEVICE RESET 56
6.6.4 CLEAR QUEUE 56
6.6.5 COMMAND COMPLETE 56
6.6.6 DISCONNECT 56
6.6.7 IDENTIFY 57
6.6.8 IGNORE WIDE RESIDUE 58
6.6.9 INITIATE RECOVERY 58
6.6.10 INITIATOR DETECTED ERROR 59
6.6.11 LINKED COMMAND COMPLETE 59
6.6.12 LINKED COMMAND COMPLETE (WITH FLAG) 59
6.6.13 MESSAGE PARITY ERROR 59
6.6.14 MESSAGE REJECT 59
6.6.15 MODIFY DATA POINTER Message 60
6.6.16 NO OPERATION 60
6.6.17 Queue tag messages 60
6.6.17.1 HEAD OF QUEUE TAG 61
6.6.17.2 ORDERED QUEUE TAG 61
6.6.17.3 SIMPLE QUEUE TAG 61
6.6.18 RELEASE RECOVERY 61
6.6.19 RESTORE POINTERS 61
6.6.20 SAVE DATA POINTER 62
6.6.21 SYNCHRONOUS DATA TRANSFER REQUEST 62
6.6.22 TERMINATE I/O PROCESS 64
6.6.23 WIDE DATA TRANSFER REQUEST 64

7 SCSI commands and status 67
7.1 Command implementation requirements 67
7.1.1 Reserved 67
7.1.2 Operation code types 67
7.2 Command descriptor block 68
7.2.1 Operation code 69
7.2.2 Logical unit number 70
7.2.3 Logical block address 70

Copyright International Organization for Standardization
Provided by IHS under license with ISO
No reproduction or networking permitted without license from IHS
Not for Resale

7.2.4 Transfer length 70
7.2.5 Parameter list length 70
7.2.6 Allocation length 70
7.2.7 Control field 71
7.3 Status 71
7.4 Command examples 73
7.4.1 Single command example 73
7.4.2 Disconnect example 73
7.4.3 Linked command example 74
7.5 Command processing considerations and exception conditions 74
7.5.1 Programmable operating definition 74
7.5.2 Incorrect initiator connection 75
7.5.3 Selection of an invalid logical unit 75
7.5.4 Parameter rounding 76
7.5.5 Asynchronous event notification 76
7.5.6 Unexpected reselection 77
7.6 Contingent allegiance condition 78
7.7 Extended contingent allegiance condition 78
7.8 Queued I/O processes 79
7.8.1 Untagged queuing 79
7.8.2 Tagged queuing 79
7.8.3 Example of queued I/O process 80
7.8.3.1 Typical sequences for tagged queuing 81
7.8.3.2 Example of tagged queuing 81
7.9 Unit attention condition 83

8 All device types 84
8.1 Model for all device types 84
8.1.1 SCSI addresses 84
8.1.1.1 SCSI device address 84
8.1.1.2 Logical units 84
8.1.1.3 Target routines 84
8.1.2 Commands implemented by all SCSI devices 84
8.1.2.1 Using the INQUIRY command 85
8.1.2.2 Using the REQUEST SENSE command 85
8.1.2.3 Using the SEND DIAGNOSTIC command 85
8.1.2.4 Using the TEST UNIT READY command 85
8.2 Commands for all device types 85
8.2.1 CHANGE DEFINITION command 86
8.2.2 COMPARE command 88
8.2.3 COPY command 89
8.2.3.1 Errors detected by the managing SCSI device 90
8.2.3.2 Errors detected by a target 91
8.2.3.3 COPY function code 00h and 01h 91
8.2.3.4 COPY function code 02h 92
8.2.3.5 COPY function code 03h 93
8.2.3.6 COPY function code 04h 94
8.2.3.7 Copies with unequal block lengths 94
8.2.4 COPY AND VERIFY command 95
8.2.5 INQUIRY command 96
8.2.5.1 Standard INQUIRY data 97
8.2.5.2 Vital product data 100
8.2.6 LOG SELECT command 101

Copyright International Organization for Standardization
Provided by IHS under license with ISO
No reproduction or networking permitted without license from IHS
Not for Resale

8.2.7 LOG SENSE command 103
8.2.8 MODE SELECT(6) command 104
8.2.9 MODE SELECT(10) command 106
8.2.10 MODE SENSE(6) command 106
8.2.10.1 Current values 107
8.2.10.2 Changeable values 108
8.2.10.3 Default values 108
8.2.10.4 Saved values 108
8.2.10.5 Initial responses 108
8.2.11 MODE SENSE(10) command 109
8.2.12 READ BUFFER command 109
8.2.12.1 Combined header and data mode (000b) 110
8.2.12.2 Vendor-specific mode (001b) 110
8.2.12.3 Data mode (010b) 110
8.2.12.4 Descriptor mode (011b) 111
8.2.13 RECEIVE DIAGNOSTIC RESULTS command 112
8.2.14 REQUEST SENSE command 112
8.2.14.1 Sense-key specific 116
8.2.14.2 Deferred errors 117
8.2.14.3 Sense key and sense code definitions 119
8.2.15 SEND DIAGNOSTIC command 125
8.2.16 TEST UNIT READY command 126
8.2.17 WRITE BUFFER command 127
8.2.17.1 Combined header and data mode (000b) 128
8.2.17.2 Vendor-specific mode (001b) 128
8.2.17.3 Data mode (010b) 128
8.2.17.4 Download microcode mode (100b) 129
8.2.17.5 Download microcode and save mode (101b) 129
8.3 Parameters for all device types 129
8.3.1 Diagnostic parameters 129
8.3.1.1 Supported diagnostic pages 130
8.3.2 Log parameters 131
8.3.2.1 Buffer over-run/under-run page 134
8.3.2.2 Error counter pages 135
8.3.2.3 Last *n* error events page 136
8.3.2.4 Non-medium error page 136
8.3.2.5 Supported log pages 136
8.3.3 Mode parameters 137
8.3.3.1 Control mode page 140
8.3.3.2 Disconnect-reconnect page 142
8.3.3.3 Peripheral device page 144
8.3.4 Vital product data parameters 144
8.3.4.1 ISO/IEC 646 implemented operating definition page 145
8.3.4.2 ISO/IEC 646 information page 146
8.3.4.3 Implemented operating definition page 146
8.3.4.4 Supported vital product data pages 148
8.3.4.5 Unit serial number page 149

9 Direct-access devices 150
9.1 Direct-access device model 150
9.1.1 Removable medium 150
9.1.2 Logical blocks 150
9.1.3 Ready state 151

Copyright International Organization for Standardization
Provided by IHS under license with ISO
No reproduction or networking permitted without license from IHS
Not for Resale

9.1.4 Initialization 151
9.1.5 Medium defects 151
9.1.6 Data cache 152
9.1.7 Reservations 153
9.1.8 Seek and rezero 154
9.1.9 Notched drives 154
9.1.10 Rotational position locking 154
9.1.11 Relative addressing 154
9.1.12 Error reporting 154
9.1.13 Examples 155
9.1.13.1 Rotating media 155
9.1.13.2 Sequential media 156
9.1.13.3 Memory media 156
9.2 Commands for direct-access devices. 157
9.2.1 FORMAT UNIT command 158
9.2.1.1 Defect list formats 162
9.2.1.2 Initialization pattern option 163
9.2.2 LOCK UNLOCK CACHE command 165
9.2.3 PRE-FETCH command 166
9.2.4 PREVENT ALLOW MEDIUM REMOVAL command 167
9.2.5 READ(06) command 168
9.2.6 READ(10) command 168
9.2.7 READ CAPACITY command 169
9.2.8 READ DEFECT DATA command 171
9.2.9 READ LONG command 173
9.2.10 REASSIGN BLOCKS command 174
9.2.11 RELEASE command 175
9.2.11.1 Logical unit release 176
9.2.11.2 Extent release 176
9.2.11.3 Third-party release 176
9.2.12 RESERVE command 177
9.2.12.1 Logical unit reservation 177
9.2.12.2 Extent reservation 177
9.2.12.3 Third-party reservation 179
9.2.12.4 Superseding reservations 180
9.2.13 REZERO UNIT command 180
9.2.14 SEARCH DATA commands 181
9.2.14.1 SEARCH DATA EQUAL command 183
9.2.14.2 SEARCH DATA HIGH command 183
9.2.14.3 SEARCH DATA LOW command 183
9.2.15 SEEK(06) and SEEK(10) commands 183
9.2.16 SET LIMITS command 184
9.2.17 START STOP UNIT command 185
9.2.18 SYNCHRONIZE CACHE command 186
9.2.19 VERIFY command 187
9.2.20 WRITE(06) command 188
9.2.21 WRITE(10) command 188
9.2.22 WRITE AND VERIFY command 189
9.2.23 WRITE LONG command 190
9.2.24 WRITE SAME command 191
9.3 Parameters for direct-access devices 192
9.3.1 Diagnostic parameters 192
9.3.1.1 Translate address page - SEND DIAGNOSTIC 192

Copyright International Organization for Standardization
Provided by IHS under license with ISO
No reproduction or networking permitted without license from IHS
Not for Resale

9.3.1.2 Translate address page - RECEIVE DIAGNOSTIC 193
9.3.2 Log parameters 194
9.3.3 Mode parameters 194
9.3.3.1 Caching page 196
9.3.3.2 Flexible disk page 199
9.3.3.3 Format device page 202
9.3.3.4 Medium types supported page 205
9.3.3.5 Notch and partition page 206
9.3.3.6 Read-write error recovery page 207
9.3.3.7 Rigid disk drive geometry page 214
9.3.3.8 Verify error recovery page 215
9.4 Definitions specific to direct-access devices 217

10 Sequential-access devices 218
10.1 Sequential-access device model 218
10.1.1 Physical elements 218
10.1.2 Data storage characteristics 219
10.1.3 Partitions within a volume 221
10.1.4 Logical elements within a partition 222
10.1.5 Data buffering 223
10.1.6 Recorded object descriptors (block identifiers) 224
10.1.7 Direction and position definitions 224
10.1.8 Error reporting 225
10.2 Command descriptions for sequential-access devices 226
10.2.1 ERASE command 227
10.2.2 LOAD UNLOAD command 228
10.2.3 LOCATE command 229
10.2.4 READ command 230
10.2.5 READ BLOCK LIMITS command 232
10.2.6 READ POSITION command 233
10.2.7 READ REVERSE command 235
10.2.8 RECOVER BUFFERED DATA command 236
10.2.9 RELEASE UNIT command 237
10.2.9.1 Third-party release 237
10.2.10 RESERVE UNIT command 238
10.2.10.1 Third-party reservation 238
10.2.10.2 Superseding reservations 239
10.2.11 REWIND command 239
10.2.12 SPACE command 240
10.2.13 VERIFY command 242
10.2.14 WRITE command 243
10.2.15 WRITE FILEMARKS command 244
10.3 Parameters for sequential-access devices 246
10.3.1 Diagnostic parameters 246
10.3.2 Log parameters 246
10.3.3 Mode parameters 246
10.3.3.1 Device configuration page 250
10.3.3.2 Medium partition page(1) 253
10.3.3.3 Medium partition page(2-4) 254
10.3.3.4 Read-write error recovery page 254
10.4 Definitions specific to sequential access devices 256

11 Commands for printer devices 257

Copyright International Organization for Standardization
Provided by IHS under license with ISO
No reproduction or networking permitted without license from IHS
Not for Resale

11.1 Model for printer devices 257
11.2 Commands for printer devices 258
11.2.1 FORMAT command 259
11.2.2 PRINT command 260
11.2.3 RECOVER BUFFERED DATA command 260
11.2.4 SLEW AND PRINT command 261
11.2.5 STOP PRINT command 262
11.2.6 SYNCHRONIZE BUFFER command 262
11.3 Parameters for printer devices 263
11.3.1 Diagnostic parameters 263
11.3.2 Log parameters 263
11.3.3 Mode parameters 263
11.3.3.1 Parallel printer interface page 264
11.3.3.2 Printer options page 266
11.3.3.3 Serial printer interface page 269

12 Processor devices 271
12.1 Model for processor devices 271
12.1.1 Host-to-host communication, SEND only 272
12.1.2 Host-to-host communication, SEND and RECEIVE 272
12.1.3 Host-to-special-output peripheral 272
12.1.4 Host-to-special-input peripheral 272
12.2 Commands for processor devices 273
12.2.1 RECEIVE command 273
12.2.2 SEND command 274
12.3 Parameters for processor devices 275
12.3.1 Diagnostic parameters 275
12.3.2 Log parameters 275
12.4 Definitions specific to processor devices 275

13 Write-once devices 276
13.1 Model for write-once devices 276
13.1.1 Logical blocks 276
13.1.2 Initialization 276
13.1.3 Physical medium defects 276
13.1.4 Error reporting 276
13.2 Commands for write-once devices 277
13.3 Parameters for write-once devices 279
13.4 Definitions specific to write-once devices 279

14 CD-ROM devices 280
14.1 Model for CD-ROM devices 280
14.1.1 CD-ROM media organization 280
14.1.2 CD-ROM physical data format 283
14.1.2.1 Frame format for audio 283
14.1.2.2 Sector format for data 283
14.1.2.3 Sub-channel information formats 284
14.1.3 CD Audio error reporting 285
14.1.4 CD-ROM ready condition/not ready condition 285
14.1.5 CD-ROM address reporting formats (MSF bit) 285
14.1.6 Sensing support for CD-audio commands. 286
14.1.7 Error reporting 286
14.2 Commands for CD-ROM devices 287

Copyright International Organization for Standardization
Provided by IHS under license with ISO
No reproduction or networking permitted without license from IHS
Not for Resale

14.2.1 PAUSE RESUME command 288
14.2.2 PLAY AUDIO(10) command 289
14.2.3 PLAY AUDIO(12) command 290
14.2.4 PLAY AUDIO MSF command 290
14.2.5 PLAY AUDIO TRACK INDEX command 292
14.2.6 PLAY AUDIO TRACK RELATIVE(10) command 293
14.2.7 PLAY AUDIO TRACK RELATIVE(12) command 294
14.2.8 READ CD-ROM CAPACITY command 294
14.2.9 READ HEADER command 296
14.2.10 READ SUB-CHANNEL command 297
14.2.10.1 Sub-Q channel data format 298
14.2.10.2 CD-ROM current position data format 302
14.2.10.3 Media catalogue number data format 302
14.2.10.4 Track international standard recording code data format 303
14.2.11 READ TOC command 305
14.3 Parameters for CD-ROM devices 307
14.3.1 Diagnostic parameters 307
14.3.2 Log parameters 307
14.3.3 Mode parameters 307
14.3.3.1 CD-ROM audio control parameters 309
14.3.3.2 CD-ROM device parameters 311
14.3.3.3 Read error recovery parameters 312
14.3.3.4 Verify error recovery parameters 318
14.4 Definitions specific to CD-ROM devices 318

15 Scanner devices 321
15.1 Model for scanner devices 321
15.2 Commands for scanner devices 322
15.2.1 GET DATA BUFFER STATUS command 323
15.2.2 GET WINDOW command 325
15.2.3 OBJECT POSITION command 329
15.2.4 READ command 331
15.2.5 SCAN command 332
15.2.6 SEND command 332
15.2.7 SET WINDOW command 333
15.3 Parameters for scanner devices 334
15.3.1 Diagnostic parameters 334
15.3.2 Log parameters 334
15.3.3 Mode parameters 335
15.3.3.1 Measurement units page 335
15.4 Definitions specific to scanner devices 337

16 Optical memory devices 338
16.1 Model for optical memory devices 338
16.1.1 Defect management 339
16.1.2 Error reporting 339
16.2 Commands for optical memory devices 340
16.2.1 ERASE(10) command 341
16.2.2 ERASE(12) command 342
16.2.3 MEDIUM SCAN command 342
16.2.4 READ(12) command 344
16.2.5 READ DEFECT DATA(12) command 345
16.2.6 READ GENERATION command 346

--`,,```,,,,````-`-`,,`,,`,`,,`---

Copyright International Organization for Standardization
Provided by IHS under license with ISO
No reproduction or networking permitted without license from IHS Not for Resale

16.2.7 READ UPDATED BLOCK(10) command 347
16.2.8 SEARCH DATA(12) commands 348
16.2.9 SET LIMITS(12) command 348
16.2.10 UPDATE BLOCK command 349
16.2.11 VERIFY(10) command 350
16.2.12 VERIFY(12) command 351
16.2.13 WRITE(10) command 352
16.2.14 WRITE(12) command 353
16.2.15 WRITE AND VERIFY(10) command 353
16.2.16 WRITE AND VERIFY(12) command 354
16.3 Parameters for optical memory devices 355
16.3.1 Diagnostic parameters 355
16.3.2 Log parameters 355
16.3.3 Mode parameters 355
16.3.3.1 Optical memory page 357
16.4 Definitions specific to write-once and optical memory devices 358

17 Medium-changer devices 359
17.1 Medium-changer device model 359
17.1.1 Medium-changer elements 359
17.1.1.1 Medium transport elements 359
17.1.1.2 Storage elements 360
17.1.1.3 Import export elements 360
17.1.1.4 Data transfer element 360
17.1.2 SCSI addressing of medium changer devices 360
17.1.3 Data access operations using a medium changer device 361
17.1.4 Element status maintenance requirements 361
17.1.5 Volume tags 361
17.1.5.1 Volume tag format 362
17.1.5.2 Primary and alternate volume tag information 362
17.2 Commands for medium changer devices 363
17.2.1 EXCHANGE MEDIUM command 364
17.2.2 INITIALIZE ELEMENT STATUS command 365
17.2.3 MOVE MEDIUM command 366
17.2.4 POSITION TO ELEMENT command 367
17.2.5 READ ELEMENT STATUS command 368
17.2.5.1 Element status data 369
17.2.5.2 Element status page 371
17.2.5.3 Medium transport element descriptor 372
17.2.5.4 Storage element descriptor 373
17.2.5.5 Import export element descriptor 374
17.2.5.6 Data transfer element descriptor 375
17.2.6 REQUEST VOLUME ELEMENT ADDRESS command 376
17.2.7 RELEASE command 378
17.2.7.1 Logical unit release 378
17.2.7.2 Element release (optional) 378
17.2.7.3 Third party release 378
17.2.8 RESERVE command 379
17.2.8.1 Logical unit reservation 379
17.2.8.2 Element reservation (optional) 379
17.2.8.3 Third party reservation 380
17.2.8.4 Superseding reservations 381
17.2.9 SEND VOLUME TAG command 381

Copyright International Organization for Standardization
Provided by IHS under license with ISO
No reproduction or networking permitted without license from IHS
Not for Resale

17.3 Parameters for medium changer devices 383
17.3.1 Diagnostic parameters 383
17.3.2 Log parameters 384
17.3.3 Mode parameters 384
17.3.3.1 Device capabilities page 385
17.3.3.2 Element address assignment page 386
17.3.3.3 Transport geometry parameters page 388
17.4 Definitions specific to medium changer devices 389

18 Communications devices 390
18.1 Communications device model 390
18.1.1 Implementation examples 391
18.1.1.1 Host-to-host communications 391
18.1.1.2 Host-to-device communications 391
18.1.1.3 Multiple role communications 391
18.2 Command descriptions for communications devices 392
18.2.1 GET MESSAGE(06) command 393
18.2.2 GET MESSAGE(10) command 393
18.2.3 GET MESSAGE(12) command 394
18.2.4 SEND MESSAGE(06) command 394
18.2.5 SEND MESSAGE(10) command 395
18.2.6 SEND MESSAGE(12) command 395
18.3 Parameters for communication devices 396
18.3.1 Diagnostic parameters 396
18.3.2 Log parameters 396
18.3.3 Mode parameters 397
18.4 Definitions specific to communications devices 398

Index 420

Annexes

A SCSI signal sequence example 399
B SCSI skew time 403
C Other SCSI standardization activities 405
D Numeric order codes 406
E Vendor identification 416

Copyright International Organization for Standardization
Provided by IHS under license with ISO
No reproduction or networking permitted without license from IHS Not for Resale

Tables

1 - Cross-reference to connector contact assignments 20
2 - Single-ended contact assignments - A cable 20
3 - Single-ended contact assignments - B cable 21
4 - Differential contact assignments - A cable 22
5 - Differential contact assignments - B cable 23
6 - Signal sources 33
7 - SCSI bus timing values 34
8 - Information transfer phases 42
9 - Message format 52
10 - Message codes 52
11 - Extended message format 53
12 - Extended message codes 54
13 - IDENTIFY message format 57
14 - IGNORE WIDE RESIDUE message format 58
15 - Ignore field definition 58
16 - MODIFY DATA POINTER 60
17 - Queue tag message format 60
18 - SYNCHRONOUS DATA TRANSFER REQUEST 62
19 - WIDE DATA TRANSFER REQUEST 64
20 - Operation code type 67
21 - Typical command descriptor block for six-byte commands 68
22 - Typical command descriptor block for ten-byte commands 68
23 - Typical command descriptor block for twelve-byte commands 68
24 - Operation code 70
25 - Control field 71
26 - Status byte 71
27 - Status byte code 72
28 - Commands in order received by target 81
29 - Commands in order of execution 81
30 - Modified by HEAD OF QUEUE TAG message 82
31 - Commands for all device types 85
32 - CHANGE DEFINITION command 86
33 - Definition parameter field 86
34 - COMPARE command 88
35 - COPY command 89
36 - COPY parameter list 89
37 - COPY function codes 90
38 - Segment descriptor for COPY function codes 00h and 01h 91
39 - Segment descriptor for COPY function code 02h 92
40 - Segment descriptor for COPY function code 03h 93
41 - Segment descriptor for COPY function code 04h 94
42 - Pad and Cat bit definition 94
43 - COPY AND VERIFY command 95
44 - INQUIRY command 96
45 - Standard INQUIRY data format 97
46 - Peripheral qualifier 97
47 - Peripheral device type 98
48 - ISO-approved version 98
49 - LOG SELECT command 101
50 - Page control field 101
51 - LOG SENSE command 103
52 - MODE SELECT(6) command 104

Copyright International Organization for Standardization
Provided by IHS under license with ISO
No reproduction or networking permitted without license from IHS
Not for Resale

53 - MODE SELECT(10) command 106
54 - MODE SENSE(6) command 106
55 - Page control field 107
56 - Mode page code usage for all devices 107
57 - MODE SENSE(10) command 109
58 - READ BUFFER command 109
59 - READ BUFFER mode field 110
60 - READ BUFFER header 110
61 - READ BUFFER descriptor 111
62 - Buffer offset boundary 111
63 - RECEIVE DIAGNOSTIC RESULTS command 112
64 - REQUEST SENSE command 112
65 - Error codes 70h and 71h sense data format 113
66 - Field pointer bytes 116
67 - Actual retry count bytes 116
68 - Format progress indication bytes 117
69 - Sense key (0h-7h) descriptions 119
70 - Sense key (8h-Fh) descriptions 120
71 - ASC and ASCQ assignments 121
72 - SEND DIAGNOSTIC command 125
73 - TEST UNIT READY command 126
74 - Preferred TEST UNIT READY responses 126
75 - WRITE BUFFER command 127
76 - WRITE BUFFER mode field 128
77 - Diagnostic page format 129
78 - Diagnostic page codes 130
79 - Supported diagnostic pages 130
80 - Log page format 131
81 - Log parameter 131
82 - Threshold met criteria 133
83 - Log page codes 134
84 - Parameter code field for buffer over-run/under-run counters 134
85 - Count basis definition 135
86 - Cause field definition 135
87 - Parameter codes for error counter pages 135
88 - Non-medium error event parameter codes 136
89 - Supported log pages 136
90 - Mode parameter list 137
91 - Mode parameter header(06) 137
92 - Mode parameter header(10) 137
93 - Mode parameter block descriptor 138
94 - Mode page format 139
95 - Mode page codes 140
96 - Control mode page 140
97 - Queue algorithm modifier 140
98 - Disconnect-reconnect page 142
99 - Data transfer disconnect control 143
100 - Peripheral device page 144
101 - Interface identifier codes 144
102 - Vital product data page codes 144
103 - ISO/IEC 646 implemented operating definition 145
104 - ISO/IEC 646 information page 146
105 - Implemented operating definition page 147

Copyright International Organization for Standardization
Provided by IHS under license with ISO
No reproduction or networking permitted without license from IHS
Not for Resale

106 - Supported vital product data pages 148
107 - Unit serial number page 149
108 - Commands for direct-access devices 157
109 - FORMAT UNIT command 158
110 - FORMAT UNIT parameter list 159
111 - Defect list header 159
112 - FORMAT UNIT defect descriptor format and requirements 160
113 - Defect descriptor - Block format 162
114 - Defect descriptor - Bytes from index format 162
115 - Defect descriptor - Physical sector format 163
116 - Initialization pattern descriptor 163
117 - Initialization pattern modifier 164
118 - Initialization pattern type 164
119 - LOCK UNLOCK CACHE command 165
120 - PRE-FETCH command 166
121 - PREVENT ALLOW MEDIUM REMOVAL command 167
122 - READ(06) command 168
123 - READ(10) command 168
124 - READ CAPACITY command 169
125 - READ CAPACITY data 170
126 - READ DEFECT DATA command 171
127 - READ DEFECT DATA defect list 172
128 - READ LONG command 173
129 - REASSIGN BLOCKS command 174
130 - REASSIGN BLOCKS defect list 174
131 - RELEASE command 175
132 - RESERVE command 177
133 - Data format of extent descriptors 178
134 - Reservation types 178
135 - REZERO UNIT command 180
136 - SEARCH DATA commands 181
137 - SEARCH DATA parameter list 182
138 - SEEK(06) command 183
139 - SEEK(10) command 183
140 - SET LIMITS command 184
141 - START STOP UNIT command 185
142 - SYNCHRONIZE CACHE command 186
143 - VERIFY command 187
144 - WRITE(06) command 188
145 - WRITE(10) command 188
146 - WRITE AND VERIFY command 189
147 - WRITE LONG command 190
148 - WRITE SAME command 191
149 - Diagnostic page codes 192
150 - Translate address page - SEND DIAGNOSTIC 192
151 - Translate address page - RECEIVE DIAGNOSTIC 193
152 - Log page codes 194
153 - Direct-access medium-type codes 194
154 - Device specific parameter 195
155 - Mode page codes 196
156 - Caching page 196
157 - Demand read and write retention priority 197
158 - Flexible disk page 199

--`,,```,,,,````-`-`,,`,,`,`,,`---

Copyright International Organization for Standardization
Provided by IHS under license with ISO
No reproduction or networking permitted without license from IHS
Not for Resale

159 - Examples of transfer rates 200
160 - Pin 34 field 201
161 - Pin 4 field 201
162 - Pin 2 field 202
163 - Format device page 202
164 - Reporting of default sector formatting support 204
165 - Reporting of changeable sector formatting support 205
166 - Medium types supported page 205
167 - Notch page 206
168 - Read-write error recovery page 207
169 - Error recovery bit definitions 208
170 - Combined error recovery parameter descriptions 209
171 - Rigid disk drive geometry page 214
172 - Rotational position locking 215
173 - Verify error recovery page 216
174 - Commands for sequential-access devices 226
175 - ERASE command 227
176 - LOAD UNLOAD command 228
177 - LOCATE command 229
178 - READ command 230
179 - READ BLOCK LIMITS command 232
180 - READ BLOCK LIMITS data 232
181 - READ POSITION command 233
182 - READ POSITION data format 233
183 - READ REVERSE command 235
184 - RECOVER BUFFERED DATA command 236
185 - RELEASE UNIT command 237
186 - RESERVE UNIT command 238
187 - REWIND command 239
188 - SPACE command 240
189 - Code field definition 240
190 - VERIFY command 242
191 - WRITE command 243
192 - WRITE FILEMARKS command 244
193 - Diagnostic page codes 246
194 - Log page codes 246
195 - Device-specific parameter 246
196 - Buffered modes 247
197 - Speed field definition 247
198 - Sequential-access density codes 249
199 - Mode page codes 249
200 - Device configuration page 250
201 - EOD formats 252
202 - Medium partition page(1) 253
203 - Medium partition page(2-4) 254
204 - Read-write error recovery page 254
205 - Commands for printer devices 258
206 - FORMAT command 259
207 - Format type 259
208 - PRINT command 260
209 - RECOVER BUFFERED DATA command 260
210 - SLEW AND PRINT command 261
211 - STOP PRINT command 262

Copyright International Organization for Standardization
Provided by IHS under license with ISO
No reproduction or networking permitted without license from IHS
Not for Resale

212 - SYNCHRONIZE BUFFER command 262
213 - Diagnostic page codes 263
214 - Log page codes 263
215 - Printer device-specific parameter 263
216 - Mode page codes 264
217 - Parallel printer interface 264
218 - Parity select 264
219 - VFU control byte 265
220 - Printer options 266
221 - Font identification 266
222 - Slew mode 266
223 - Line slew 267
224 - Form slew 268
225 - Data termination option 268
226 - Serial printer interface 269
227 - Parity selection 270
228 - Pacing protocol 270
229 - Commands for processor devices 273
230 - RECEIVE command 273
231 - SEND command 274
232 - SEND command - AEN data format 274
233 - Diagnostic page codes 275
234 - Log page codes 275
235 - Commands for write-once devices 277
236 - Example mixed mode CD-ROM disc layout 281
237 - MSF address format 285
238 - Commands for CD-ROM device 287
239 - PAUSE RESUME command 288
240 - PLAY AUDIO(10) command 289
241 - PLAY AUDIO(12) command 290
242 - PLAY AUDIO MSF command 290
243 - PLAY AUDIO TRACK INDEX command 292
244 - PLAY AUDIO TRACK RELATIVE(10) command 293
245 - PLAY AUDIO TRACK RELATIVE(12) command 294
246 - READ CD-ROM CAPACITY command 294
247 - READ CAPACITY data format 295
248 - READ HEADER command 296
249 - READ HEADER data format 296
250 - CD-ROM data mode codes 297
251 - READ SUB-CHANNEL command 297
252 - Sub-channel data format codes 298
253 - Sub-Q channel data format 298
254 - Audio status codes 299
255 - ADR sub-channel Q field 300
256 - Sub-channel Q control bits 300
257 - CD-ROM current position data format 302
258 - Media catalogue number data format 302
259 - Track international standard recording code data format 303
260 - READ TOC command 305
261 - READ TOC data format 305
262 - Diagnostic page codes 307
263 - Log page codes 307
264 - CD-ROM medium type codes 307

--`,,```,,,,````-`-`,,`,,`,`,,`---

Copyright International Organization for Standardization
Provided by IHS under license with ISO
No reproduction or networking permitted without license from IHS
Not for Resale

265 - CD-ROM device-specific parameter 308
266 - CD-ROM density codes 308
267 - Mode page codes 309
268 - CD-ROM audio control parameters page 309
269 - Multiplier for LBAs 310
270 - Output port channel selection 310
271 - CD-ROM parameters page 311
272 - Inactivity timer multiplier values 311
273 - Read error recovery parameters page 312
274 - Error recovery bit settings 312
275 - CD-ROM error recovery descriptions 313
276 - Verify error recovery parameters page 318
277 - Commands for scanner devices 322
278 - GET DATA BUFFER STATUS command 323
279 - Data buffer status format 323
280 - GET WINDOW command 325
281 - Get window data header 325
282 - Window descriptor bytes 326
283 - Image composition codes 327
284 - Padding types 328
285 - Compression types and arguments 328
286 - OBJECT POSITION command 329
287 - Position function 329
288 - READ command 331
289 - Data type codes 331
290 - SCAN command 332
291 - SEND command 332
292 - SET WINDOW command 333
293 - Set window data header 333
294 - Diagnostic page codes 334
295 - Log page codes 334
296 - Mode page codes 335
297 - Measurement units page 335
298 - Basic measurement units 336
299 - Commands for optical memory devices 340
300 - ERASE(10) command 341
301 - ERASE(12) command 342
302 - MEDIUM SCAN command 342
303 - MEDIUM SCAN parameter list 343
304 - READ(12) command 344
305 - READ DEFECT DATA(12) command 345
306 - READ DEFECT DATA(12) list header 345
307 - READ GENERATION command 346
308 - Maximum generation data block 346
309 - READ UPDATED BLOCK(10) command 347
310 - SEARCH DATA(12) commands 348
311 - SET LIMITS(12) command 348
312 - UPDATE BLOCK command 349
313 - VERIFY command 350
314 - VERIFY(12) command 351
315 - WRITE(10) command 352
316 - WRITE(12) command 353
317 - WRITE AND VERIFY(10) command 353

Copyright International Organization for Standardization
Provided by IHS under license with ISO
No reproduction or networking permitted without license from IHS
Not for Resale

318 - WRITE AND VERIFY(12) command 354
319 - Diagnostic page codes 355
320 - Log page codes 355
321 - Optical memory medium-type codes 355
322 - Optical memory device specific parameter 356
323 - Optical memory density codes 356
324 - Mode page codes 357
325 - Optical memory page 358
326 - Volume tag information format 362
327 - Commands for medium changer devices 363
328 - EXCHANGE MEDIUM command 364
329 - INITIALIZE ELEMENT STATUS command 365
330 - MOVE MEDIUM command 366
331 - POSITION TO ELEMENT command 367
332 - READ ELEMENT STATUS command 368
333 - Element type code 368
334 - Element status data 369
335 - Element status page 371
336 - Medium transport element descriptor 372
337 - Storage element descriptor 373
338 - Import export element descriptor 374
339 - Data transfer element descriptor 375
340 - REQUEST VOLUME ELEMENT ADDRESS command 376
341 - Volume element address header format 377
342 - RELEASE command 378
343 - RESERVE command 379
344 - Data format of element list descriptors 380
345 - SEND VOLUME TAG command 381
346 - Send volume tag action codes 381
347 - Send volume tag parameters format 382
348 - Diagnostic page codes 383
349 - Log page codes 384
350 - Mode page codes 384
351 - Device capabilities page 385
352 - Element address assignment page 386
353 - Transport geometry parameters page 388
354 - Commands for communications devices 392
355 - GET MESSAGE(06) command 393
356 - GET MESSAGE(10) command 393
357 - GET MESSAGE(12) command 394
358 - SEND MESSAGE(06) command 394
359 - SEND MESSAGE(10) command 395
360 - SEND MESSAGE(12) command 395
361 - Diagnostic page codes 396
362 - Log page codes 396
363 - Mode page codes 397
B.1 - Fast SCSI jitter budget 403
B.2 - Mapping of jitter to SCSI 403
D.1 - ASC and ASCQ assignments 406
D.2 - SCSI-2 Operation Codes 412
E.1 - Vendor identification list 416

Copyright International Organization for Standardization
Provided by IHS under license with ISO
No reproduction or networking permitted without license from IHS
Not for Resale

Figures

1 - 50/68-contact non-shielded high-density SCSI device connector 11
2 - 50/68-contact non-shielded high-density cable connector 12
3 - 50-contact non-shielded low-density SCSI device connector 13
4 - 50-contact non-shielded low-density cable connector 14
5 - 50/68-contact shielded high-density SCSI device connector 16
6 - 50/68-contact shielded high-density cable connector 17
7 - 50-contact shielded low-density SCSI device connector 18
8 - 50-contact shielded low-density cable connector 19
9 - Alternative 1 termination 28
10 - Alternative 2 termination for single-ended devices 28
11 - Termination for differential devices 29
12 - Differential driver protection circuit 29
13 - SCSI ID bits 30
14 - Sample SCSI configurations 31
15 - Wide SCSI byte ordering 45
16 - Phase sequences 50
17 - Simplified SCSI system 51
18 - Typical volume layout 219
19 - Typical medium track layout 219
20 - Serpentine recording example 219
21 - Parallel recording example 220
22 - Helical scan recording example 220
23 - Early-warning example 220
24 - Partitioning example - one partition per track group 221
25 - Partitioning example - one partition per two track groups 221
26 - Partitioning example - two partitions per track group 222
27 - SCSI printer model 257
28 - Illustration of element status data structure 370
A.1 - SCSI signal sequence example 402
C.1 - SCSI-3 standards structure 405

--`,,```,,,,````-`-`,,`,,`,`,,`---

Copyright International Organization for Standardization
Provided by IHS under license with ISO
No reproduction or networking permitted without license from IHS Not for Resale

Foreword

ISO (the International Organization for Standardization) and IEC (the International Electrotechnical Commission) form the speciallized system for worldwide standardization. National bodies that are members of ISO or IEC participate in the development of International Standards through technical committees established by the respective organization to deal with particular fields of technical activity. ISO and IEC technical committees collaborate in fields of mutual interest. Other international organizations, governmental and non-governmental, in liaison with ISO and IEC, also take part in the work.

In the field of information technology, ISO and IEC have established a joint technical committee, ISO/IEC JTC 1. Draft International Standards adopted by the joint technical committee are circulated to national bodies for voting. Publication as an International Standard requires approval by at least 75 % of the national bodies casting a vote.

International Standard ISO/IEC 9316 was prepared by Joint Technical Committee ISO/IEC JTC 1, *Subcommittee SC 25, Interconnection of information technology equipment*.

This second edition cancels and replaces the first edition (ISO 9316:1989), which has been technically revised.

Annexes A to E of this International Standard are for information only.

Copyright International Organization for Standardization
Provided by IHS under license with ISO
No reproduction or networking permitted without license from IHS Not for Resale

Introduction

This International Standard constitutes a revision of and therefore replaces ISO 9316:1989, *Information processing systems – Small Computer System Interface (SCSI).*

This International Standard encompasses the following:

Clause 1	describes the scope.
Clause 2	lists the normative references.
Clause 3	provides a glossary common to the whole document.
Clause 4	provides descriptions and conventions.
Clause 5	describes the physical characteristics.
Clause 6	describes the logical characteristics of the interface.
Clause 7	describes the SCSI command and status structure.
Clause 8	specifies those commands that have a consistent meaning for all device types.
Clause 9	specifies commands for direct-access devices.
Clause 10	specifies commands for sequential-access devices.
Clause 11	specifies commands for printer devices.
Clause 12	specifies commands for processor devices.
Clause 13	specifies commands for write-once devices.
Clause 14	specifies commands for CD-ROM devices.
Clause 15	specifies commands for scanner devices.
Clause 16	specifies commands for optical memory devices.
Clause 17	specifies commands for medium changer devices.
Clause 18	specifies commands for communications devices.
Annex A	illustrates SCSI signal sequence.
Annex B	illustrates fast SCSI skew time.
Annex C	describes other SCSI standardization activities.
Annex D	contains SCSI-2 additional sense codes and operation codes in numeric order.
Annex E	contains the list of SCSI-2 vendor identifications.

The SCSI protocol is designed to provide an efficient peer-to-peer I/O bus with up to 16 devices, including one or more hosts. Data may be transferred asynchronously at rates that only depend on device implementation and cable length. Synchronous data transfers are supported at rates up to 10 mega-transfers per second. With the 32-bit wide data transfer option, data rates of up to 40 megabytes per second are possible.

SCSI-2 includes command sets for magnetic and optical disks, tapes, printers, processors, CD-ROMs, scanners, medium changers, and communications devices.

In 1985, when the first SCSI standard was being finalized several manufacturers wanted to increase the mandatory requirements of SCSI and to define further features for direct-access devices. Rather than delay the SCSI standard, an ad hoc group was formed to develop a working paper that was eventually called the Common Command Set (CCS). Many disk products were designed using this working paper.

In parallel with the development of the CCS working paper, work began on an enhanced SCSI standard which was named SCSI-2. SCSI-2 included the results of the CCS working paper and extended them to all device types. It also added caching commands, performance enhancement features, and other worthwhile functions. While SCSI-2 has gone well beyond the original SCSI standard (now referred to as SCSI-1), it retains a high degree of compatibility with SCSI-1 devices.

SCSI-2 has evolved significantly from SCSI-1 with the new document nearly three times larger. Most of the changes are additions, but several obsolete options were removed:

a) Single initiator option

b) Non-arbitrating systems option

--`,,```,,,,````-`-`,,`,,`,`,,`---
Copyright International Organization for Standardization
Provided by IHS under license with ISO
No reproduction or networking permitted without license from IHS Not for Resale

c) The SCSI-1 alternative 1 shielded connector

d) Non-extended sense data option

e) Reservation queuing option

f) The read-only device command set.

There are several new low-level requirements:

a) Parity is now required

b) Initiators are required to provide terminator power

c) The arbitration delay was increased from 2,2 to 2,4 μs

d) Message support is now required.

Several low-level options were added:

a) Wide SCSI (up to 32 bits wide using a second cable)

b) Fast SCSI (synchronous data transfers of up to 10 mega-transfers per second)

c) Command queuing (up to 256 commands per initiator per logical unit)

d) High-density connector alternatives were added

e) Asynchronous event notification

f) Extended contingent allegiance.

New command sets were added including:

a) CD-ROM (replaces read-only device)

b) Scanner device

c) Optical memory device (provides for write-once, read-only, and erasable media)

d) Medium changer device

e) Communications device

All command sets were enhanced:

a) Device models were added

b) Extended sense was expanded

c) The INQUIRY data was expanded

d) The MODE SELECT and MODE SENSE commands were paged for all device types

e) The CHANGE DEFINITION, LOG SELECT, LOG SENSE, READ BUFFER, and WRITE BUFFER commands were added for all device types

f) The COPY command definition was expanded to include inexact block size handling and an image copy option

g) The direct-access device command set was enhanced to add cache management, several new commands and to provide more initiator control over defect management

h) The sequential-access device command set was enhanced to add a partitioned media concept

i) The printer device command set was enhanced by adding several mode pages

j) The write-once (optical) device command set was enhanced by adding several new commands plus extending several command descriptor blocks to twelve bytes to accommodate larger transfer lengths.

--`,,```,,,,````-`-`,,`,,`,`,,`---

Copyright International Organization for Standardization
Provided by IHS under license with ISO
No reproduction or networking permitted without license from IHS Not for Resale

--`,,```,,,,````-`-`,,`,,`,`,,`---

Copyright International Organization for Standardization
Provided by IHS under license with ISO
No reproduction or networking permitted without license from IHS

Not for Resale

Information technology - Small Computer System Interface-2

1 Scope

This International Standard defines an input/output bus for interconnecting computers and peripheral devices. It defines extensions to the Small Computer System Interface (ISO 9316:1989), referred to herein as SCSI-1. It also provides more complete standardization of the previously defined command sets. It includes the necessary specification of the mechanical, electrical, and functional characteristics of the interface to allow inter-operability of conforming devices. This International Standard is referred to herein as SCSI-2. The term SCSI is used wherever it is not necessary to distinguish between the two versions.

Copyright International Organization for Standardization
Provided by IHS under license with ISO
No reproduction or networking permitted without license from IHS Not for Resale

2 Normative references

The following standards contain provisions which, through reference in this text, constitute provisions of this International Standard. At the time of publication, the editions indicated were valid. All standards are subject to revision, and parties to agreements based on this International Standard are encouraged to investigate the possibility of applying the most recent editions of the standards indicated below. Members of IEC and ISO maintain registers of currently valid standards.

ISO/IEC 8482:1993, *Information technology — Telecommunications and information exchange between systems — Twisted pair multipoint interconnections.*

ISO/IEC 10149:1989[1)], *Information technology — Data interchange on read-only 120 mm optical data disks (CD-ROM).*

ISO/IEC 10222:—[2)], *Information processing systems — Enhanced Small Device Interface.*

IEC 908:1987, *Compact disc digital audio system.*

1) Currently under revision.

2) To be published.

Copyright International Organization for Standardization
Provided by IHS under license with ISO
No reproduction or networking permitted without license from IHS
Not for Resale

3 Definitions, symbols and abbreviations

3.1 Definitions

For the purposes of this International Standard, the following definitions apply.

3.1.1 active I/O process: An I/O process that is presently in execution (not queued).

3.1.2 byte: Indicates an 8-bit construct.

3.1.3 command descriptor block (CDB): The structure used to communicate commands from an initiator to a target.

3.1.4 command queue: The queue used to store the queued I/O processes (see 7.8).

3.1.5 connect: The initiator function that selects a target to establish a nexus and to start an I/O process. The connection that results is an initial connection.

3.1.6 connection: An initial connection or reconnection. A connection can only occur between one initiator and one target.

3.1.7 contact: The electrically-conductive portion of a connector associated with a single conductor in a cable.

3.1.8 contingent allegiance: A condition typically generated by a CHECK CONDITION status during which a target preserves sense data (see 7.6).

3.1.9 current I/O process: The I/O process that is presently connected on the SCSI bus.

3.1.10 disconnect: The action that occurs when an SCSI device releases control of the SCSI bus, allowing it to go to the BUS FREE phase.

3.1.11 extended contingent allegiance: A condition generated by an INITIATE RECOVERY message to assist in extended error recovery procedures in multi-initiator systems (see 7.7).

3.1.12 field: A group of one or more contiguous bits.

3.1.13 host adapter: A device which connects between a host system and the SCSI bus. The device usually performs the lower layers of the SCSI protocol and normally operates in the initiator role. This function may be integrated into the host system.

3.1.14 initial connection: An initial connection is the result of a connect and it exists from the assertion of the BSY signal in a SELECTION phase until the next BUS FREE phase occurs.

3.1.15 initiator: An SCSI device that requests an I/O process to be performed by another SCSI device (a target).

3.1.16 invalid: An illegal (reserved) or unsupported field or code value.

3.1.17 I/O process: An I/O process consists of one initial connection and zero or more reconnections, all pertaining to a single command or a group of linked commands. More specifically, the connection(s) pertain to a nexus in which zero or more command descriptor blocks are transferred. An I/O process begins with the establishment of a nexus. An I/O process normally ends with the BUS FREE phase following successful transfer of a COMMAND COMPLETE or a RELEASE RECOVERY message. An I/O process also ends with the BUS FREE phase following an ABORT, ABORT TAG, BUS DEVICE RESET, CLEAR QUEUE message, or a hard RESET condition, or an unexpected disconnect occurs.

--`,,```,,,,````-`-`,,`,,`,`,,`---
Copyright International Organization for Standardization
Provided by IHS under license with ISO
No reproduction or networking permitted without license from IHS Not for Resale

3.1.18 I_T nexus: A nexus which exists between an initiator and a target.

3.1.19 I_T_L nexus: A nexus which exists between an initiator, a target, and a logical unit. This relationship replaces the prior I_T nexus.

3.1.20 I_T_R nexus: A nexus which exists between an initiator, a target, and a target routine. This relationship replaces the prior I_T nexus.

3.1.21 I_T_x nexus: A nexus which is either an I_T_L or I_T_R nexus.

3.1.22 I_T_L_Q nexus: A nexus between an initiator, a target, a logical unit, and a queue tag following the successful receipt of one of the queue tag messages. This relationship replaces the prior I_T_L nexus.

3.1.23 I_T_x_y nexus: A nexus which is either an I_T_x or I_T_L_Q.

3.1.24 logical block: A unit of data supplied or requested by an initiator.

3.1.25 logical unit: A physical or virtual peripheral device addressable through a target.

3.1.26 logical unit number: An encoded three-bit identifier for the logical unit.

3.1.27 mandatory: The referenced item is required to claim compliance with this International Standard.

3.1.28 nexus: A relationship that begins with the establishment of an initial connection and ends with the completion of the I/O process. The relationship may be restricted to specify a single logical unit or target routine by the successful transfer of an IDENTIFY message. The relationship may be further restricted by the successful transfer of a queue tag message.

3.1.29 one: A true signal value or a true condition of a variable.

3.1.30 optional: The referenced item is not required to claim compliance with this International Standard. Implementation of an optional item must be as defined in this International Standard.

3.1.31 page: Several commands use regular parameter structures that are referred to as pages. These pages are identified with a value known as a page code.

3.1.32 peripheral device: A physical peripheral device that can be attached to an SCSI device, which connects to the SCSI bus. The peripheral device and the SCSI device (peripheral controller) may be physically packaged together. Often there is a one-to-one mapping between peripheral devices and logical units, but this is not required. Examples of peripheral devices are: magnetic disks, printers, optical disks, and magnetic tapes.

3.1.33 queue tag: The value associated with an I/O process that uniquely identifies it from other queued I/O processes in the logical unit for the same initiator.

3.1.34 queued I/O process: An I/O process that is in the command queue.

3.1.35 reconnect: The act of reviving a nexus to continue an I/O process. A target reconnects to an initiator by using the RESELECTION and MESSAGE IN phases after winning arbitration. An initiator reconnects to a target by using the SELECTION and MESSAGE OUT phases after winning arbitration (see 7.5.2).

3.1.36 reconnection: A reconnection is the result of a reconnect and it exists from the assertion of the BSY signal in a SELECTION or RESELECTION phase until the next BUS FREE phase occurs.

3.1.37 reserved: Identifies bits, fields, and code values that are set aside for future standardization.

Copyright International Organization for Standardization
Provided by IHS under license with ISO
No reproduction or networking permitted without license from IHS Not for Resale

3.1.38 SCSI address: The hex representation of the unique address (0-15) assigned to an SCSI device. This address would normally be assigned and set in the SCSI device during system installation.

3.1.39 SCSI ID: The bit-significant representation of the SCSI address referring to one of the signal lines DB(7-0).

3.1.40 SCSI device: A host adapter or a target controller that can be attached to the SCSI bus.

3.1.41 signal assertion: The act of driving a signal to the true state.

3.1.42 signal negation: The act of driving a signal to the false state or allowing the cable terminators to bias the signal to the false state (by placing the driver in the high impedance condition).

3.1.43 signal release: The act of allowing the cable terminators to bias the signal to the false state (by placing the driver in the high impedance condition).

3.1.44 status: One byte of information sent from a target to an initiator upon completion of each command.

3.1.45 target: An SCSI device that performs an operation requested by an initiator.

3.1.46 target routine: A target routine is an I/O process directed to a target, and not to a logical unit (see 6.6.7).

3.1.47 third-party: When used in reference to COPY commands, third-party means a COPY command issued to one device to perform a copy operation between two other devices. When used in reference to RESERVE, or RELEASE commands, third-party means a reservation made on behalf of another device (e.g. A processor device requests that a direct-access device reserve itself for exclusive use by a sequential-access device).

3.1.48 unexpected disconnect: A disconnection that occurs as a result of an exception condition (see 6.1.1).

3.1.49 vendor-specific (VS): Something (e.g. a bit, field, code value, etc.) that is not defined by this International Standard and may be used differently in various implementations.

3.1.50 zero: A false signal value or a false condition of a variable.

3.2 Symbols and abbreviations

AEN Asynchronous event notification (see 7.5.5)
AWG American Wire Gauge
LSB Least significant bit
LUN Logical unit number
MSB Most significant bit
SCSI Either SCSI-1 or SCSI-2
SCSI-1 The Small Computer System Interface (ISO 9316:1989)
SCSI-2 The Small Computer System Interface - 2 (ISO/IEC 9316:1995)

--`,,```,,,,````-`-`,,`,,`,`,,`---

Copyright International Organization for Standardization
Provided by IHS under license with ISO
No reproduction or networking permitted without license from IHS Not for Resale

4 General

4.1 Overview

SCSI is a local I/O bus that can be operated over a wide range of data rates. The primary objective of the interface is to provide host computers with device independence within a class of devices. Thus, different disk drives, tape drives, printers, optical media drives, and other devices can be added to the host computers without requiring modifications to generic system hardware or software. Provision is made for the addition of special features and functions through the use of vendor unique fields and codes. Reserved fields and codes are provided for future standardization.

A second key objective of SCSI-2 is to provide compatibility with those SCSI-1 devices that support bus parity and that meet conformance level 2 of SCSI-1. While some previously vendor unique commands and parameters have been defined by the SCSI-2 standard, devices meeting SCSI-1 and SCSI-2 can co-exist on the same bus. It is intended that those operating systems providing support for both command sets be able to operate in environments mixing SCSI-1 and SCSI-2 devices. Properly ^Sonforming SCSI-1 devices, both initiators and targets, should respond in an acceptable manner to reject SCSI-2 protocol extensions. All SCSI-2 protocol extensions are designed to be permissive of such rejections and to allow the SCSI-1 device to continue operation without requiring the use of the extension.

A third key objective of SCSI-2 is to move device-dependent intelligence out to the SCSI-2 devices. The command set definitions allow a sophisticated operating system to obtain all required initialization information from the attached SCSI-2 devices. The formalized sequence of requests identify the type of attached SCSI-2 device, the characteristics of the device, and all the changeable parameters supported by the device. Further requests can determine the readiness of the device to operate, the types of media supported by the device, and all other pertinent system information. Those parameters not required by the operating system for operation, initialization, or system tuning are not exposed to the SCSI-2 interface, but are managed by the SCSI-2 device itself.

The interface uses logical rather than physical addressing for all data blocks. For direct-access devices, each logical unit may be interrogated to determine how many blocks it contains. A logical unit may coincide with all or part of a peripheral device.

The interface protocol includes provision for the connection of multiple initiators (SCSI devices capable of initiating an operation) and multiple targets (SCSI devices capable of responding to a request to perform an operation). Distributed arbitration (i.e. bus-contention logic) is built into the architecture of SCSI. A priority system awards interface control to the highest priority SCSI device that is contending for use of the bus. The time to complete arbitration is independent of the number of devices that are contending and can be completed in less than 10 μs.

There are two electrical alternatives: single-ended and differential. Single-ended and differential devices are electrically incompatible and can not be mixed on the same physical bus.

Provision is made for cable lengths up to 25 m using differential drivers and receivers. A single-ended driver and receiver configuration is defined for cable lengths of up to 6 m and is primarily intended for applications within a cabinet.

Arbitration is defined to permit multiple initiators and to permit concurrent I/O operations. All SCSI devices are required to be capable of operating with the defined asynchronous transfer protocol. In addition, an optional synchronous transfer protocol is defined. A message protocol for control of the interface is also specified. In most cases, messages are not directly apparent to the host computer software.

Commands are classified as mandatory, optional, or vendor-specific. SCSI devices are required to implement all mandatory commands defined for the appropriate device type and may implement other commands as well. SCSI devices contain commands that facilitate the writing of self-configuring software drivers that can discover all necessary attributes without prior knowledge of specific peripheral characteristics (such as storage capacity). Many commands

Copyright International Organization for Standardization
Provided by IHS under license with ISO
No reproduction or networking permitted without license from IHS Not for Resale

also implement a very large logical block address space (2^{32} blocks), although some commands implement a somewhat smaller logical block address space (2^{21} blocks).

Starting with clause 8 and for each clause on a specific device type, the clause is constructed of at least four subclauses. The first subclause is the model for the device type. The model establishes the framework for interpreting the commands for the device type. The attributes and capabilities of the device type are discussed and examples are given. The second subclause defines the commands applicable to the device type. The third subclause defines the parameters applicable to the device type. These are the diagnostic parameters, log parameters, mode parameters and vital product data parameters that are transmitted as part of the appropriate commands. Most of the parameters are formatted into pages. The fourth subclause gives the definition of terms that apply specifically to that device type.

Starting with clause 9 the commands in each of these clauses are unique to the device type, or they have interpretations, fields, or features that are specific for the device type. Thus, for example, although the WRITE command is used for several device types, it has a somewhat different form for each type, with different parameters and meanings. Therefore, it is specified separately for each device type.

4.2 Conventions

Certain words and terms used in this International Standard have a specific meaning beyond the normal English meaning. These words and terms are defined either in clause 3 or in the text where they first appear. Names of signals, phases, messages, commands, statuses, sense keys, additional sense codes, and additional sense code qualifiers are in all uppercase (e.g. REQUEST SENSE). Lower-case is used for words having the normal English meaning.

Fields containing only one bit are usually referred to as the name bit instead of the name field.

Numbers that are not immediately followed by lower-case b or h are decimal values.

Numbers immediately followed by lower-case b (xxb) are binary values.

Numbers immediately followed by lower-case h (xxh) are hexadecimal values.

Copyright International Organization for Standardization
Provided by IHS under license with ISO
No reproduction or networking permitted without license from IHS Not for Resale

5 Physical characteristics

This clause contains the physical definition of SCSI-2. The connectors, cables, signals, terminators, and bus timing values needed to implement the interface are covered.

5.1 Physical description

SCSI devices are daisy-chained together using a common 50-conductor A cable and, optionally, a 68-conductor B cable. Both ends of each cable are terminated. All signals are common between all SCSI devices on the A cable. In systems that employ the wide SCSI option, wide SCSI devices additionally connect to the B cable. Various width SCSI devices may be mixed.

NOTE 1 An alternate 16-bit single-cable solution and an alternate 32-bit solution is being defined and the B cable definition will be removed in a future version of SCSI.

Two driver/receiver alternatives are specified:

a) Single-ended drivers and receivers, which allow a maximum cable length of 6 m (primarily for connection within an enclosure).
b) Differential drivers and receivers, which allow a maximum cable length of 25 m.

The single-ended and differential alternatives are mutually exclusive on the same physical bus.

NOTE 2 Use of single-ended drivers and receivers with the fast synchronous data transfer option is not recommended.

5.2 Cable requirements

The characteristic impedance of the cable should be no less than 90 Ω and no greater than 140 Ω. The characteristic impedance of the cable used when implementing the fast synchronous data transfer option is defined in 5.2.3.

NOTE 3 There are successful single-ended implementations using cables with less than 90 Ω characteristic impedance. However, system integrity in single-ended implementations is improved when the characteristic impedance of the cable is greater than 90 Ω. Cable parameters other than characteristic impedance are critical to system integrity. Alternative cable parameters are being investigated as a part of a future version of SCSI.

A minimum conductor size of 0,080 42 mm^2 (28 AWG) should be used to minimize noise effects and ensure proper distribution of terminator power. A smaller conductor size may be used for signals other than terminator power.

NOTES
4 To minimize discontinuities and signal reflections, cables of different impedances should not be used in the same bus. Implementations may require trade-offs in shielding effectiveness, cable length, the number of loads, transfer rates, and cost to achieve satisfactory system operation.
5 To minimize discontinuities due to local impedance variation, a flat cable should be spaced at least 1,27 mm (0,050 in) from other cables, any other conductor, or the cable itself when the cable is folded.
6 Regulatory agencies may require use of larger wire size.

5.2.1 Single-ended cable

A 50-conductor flat cable or 25-signal twisted-pair cable shall be used for the A cable. A 68-conductor flat cable or 34-signal twisted-pair cable shall be used for the B cable if the wide SCSI option is implemented. The maximum cumulative cable length shall be 6,0 m. If twisted-pair cables are used, then twisted pairs in the cable shall be wired to physically opposing contacts in the connector.

A stub length of no more than 0,1 m is allowed off the mainline interconnection within any connected equipment or from any connected point.

NOTE 7 Stub clustering should be avoided. Stubs should be spaced at least 0,3 m apart.

Copyright International Organization for Standardization
Provided by IHS under license with ISO
No reproduction or networking permitted without license from IHS Not for Resale

SCSI bus termination shall be at each end of the cable and may be internal to the SCSI devices that are at the ends of the cable.

5.2.2 Differential cable

A 50-conductor flat cable or 25-signal twisted-pair cable shall be used for the A cable. A 68-conductor flat cable or 34-signal twisted-pair cable shall be used for the B cable if the wide SCSI option is implemented. The maximum cumulative cable length shall be 25 m. If twisted-pair cables are used, then twisted pairs in the cable shall be wired to physically opposing contacts in the connector.

A stub length of no more than 0,2 m is allowed off the mainline interconnection within any connected equipment or from any connected point.

SCSI bus termination shall be at each end of the cable and may be internal to the SCSI devices that are at the ends of the cable.

NOTE 8 The use of twisted pair cable (either twisted-flat or discrete wire twisted pairs) is strongly recommended. Without twisted pairs, even at slow data rates and very short distances, crosstalk between adjacent signals causes spurious pulses with differential signals.

5.2.3 Cable requirements for fast synchronous data transfer

In systems which use the fast synchronous data transfer option (see 5.8), the A and B cables should meet the conductor size recommendation in 5.2. The cable should have an overall shield suitable for termination in a shielded connector.

In such systems, the cables shall have the following electrical characteristics:

Characteristic impedance:	90 Ω to 132 Ω
Signal attenuation:	0,095 dB maximum per metre at 5 Mhz
Pair-to-pair propagation delay delta:	0,20 ns maximum per metre
DC resistance:	0,230 Ω maximum per metre at 20°C

5.3 Connector requirements

Two types of connectors are defined: non-shielded and shielded. The non-shielded connectors are typically used for in-cabinet applications. Shielded connectors are typically used for external applications where electromagnetic compatibility (EMC) and electrostatic discharge (ESD) protection may be required. Either type of connector may be used with the single-ended or differential drivers.

5.3.1 Non-shielded connector requirements

Two non-shielded connector alternatives are specified for the A cable and one non-shielded connector is specified for the B cable.

5.3.1.1 Non-shielded connector alternative 1 - A cable

The alternative 1 non-shielded high-density SCSI device connector for the A cable (see figure 1) shall be a 50-conductor connector consisting of two rows of 25 female contacts with adjacent contacts 1,27 mm (0,05 in) apart. The non-mating portion of the connector is shown for reference only.

The alternative 1 non-shielded high-density cable connector for the A cable (see figure 2) shall be a 50-conductor connector consisting of two rows of 25 male contacts with adjacent contacts 1,27 mm (0,05 in) apart. The non-mating portion of the connector is shown for reference only.

Copyright International Organization for Standardization
Provided by IHS under license with ISO
No reproduction or networking permitted without license from IHS Not for Resale

5.3.1.2 Non-shielded connector alternative 2 - A cable

The alternative 2 non-shielded low-density SCSI device connector for the A cable (see figure 3) shall be a 50-conductor connector consisting of two rows of 25 male pins with adjacent pins 2,54 mm (0,1 in) apart. A shroud and header body should be used. The non-mating portion of the connector is shown for reference only.

The alternative 2 non-shielded low-density cable connector for the A cable (see figure 4) shall be a 50-conductor connector consisting of two rows of 25 female contacts with adjacent contacts 2,54 mm (0,1 in) apart. It is recommended that keyed connectors be used.

5.3.1.3 Non-shielded connector - B cable

The non-shielded high-density SCSI device connector for the B cable (see figure 1) shall be a 68-conductor connector consisting of two rows of 34 female contacts with adjacent contacts 1,27 mm (0,05 in) apart. The non-mating portion of the connector is shown for reference only.

The non-shielded high-density cable connector for the B cable (see figure 2) shall be a 68-conductor connector consisting of two rows of 34 male contacts with adjacent contacts 1,27 mm (0,05 in) apart. The non-mating portion of the connector is shown for reference only.

Copyright International Organization for Standardization
Provided by IHS under license with ISO
No reproduction or networking permitted without license from IHS Not for Resale

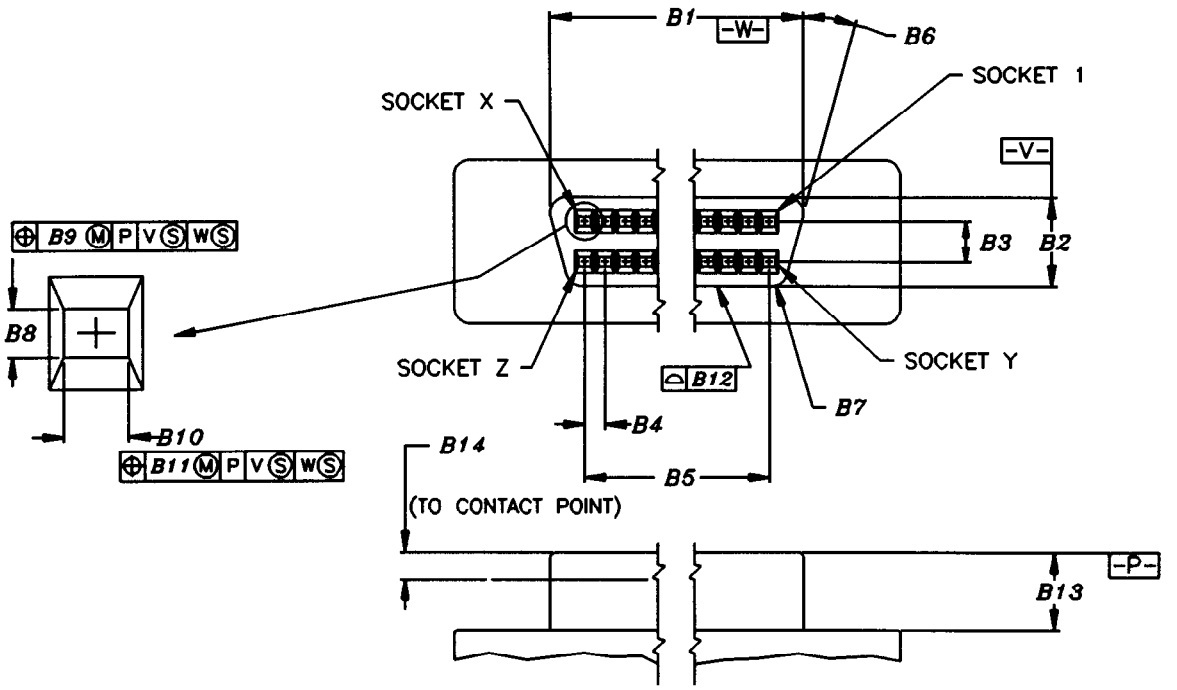

Dimensions	50 Position		68 Position	
	mm	in	mm	in
B1	34,70	1,366	46,13	1,816
B2	5,54	0,218	5,54	0,218
B3	2,54	0,100	2,54	0,100
B4	1,27	0,050	1,27	0,050
B5	30,48	1,200	41,91	1,650
B6	15°	15°	15°	15°
B7	1,00 R	0,039 R	1,00 R	0,039 R
B8	0,61±0,05	0,024±0,002	0,61±0,05	0,024±0,002
B9	0,15	0,006	0,15	0,006
B10	0,86±0,10	0,034±0,004	0,86±0,10	0,034±0,004
B11	0,15	0,006	0,15	0,006
B12	0,05	0,002	0,05	0,002
B13	5,00±0,13	0,197±0,005	5,00±0,13	0,197±0,005
B14	1,75 max.	0,069 max.	1,75 max.	0,069 max.
Socket X	25		34	
Socket Y	26		35	
Socket Z	50		68	

NOTE: Dimensions *B8* and *B10* are the opening in the dielectric. The socket contacts (not shown) fit wthin the opening.

Figure 1 - 50/68-contact non-shielded high-density SCSI device connector (A cable/B cable)

Copyright International Organization for Standardization
Provided by IHS under license with ISO
No reproduction or networking permitted without license from IHS
Not for Resale

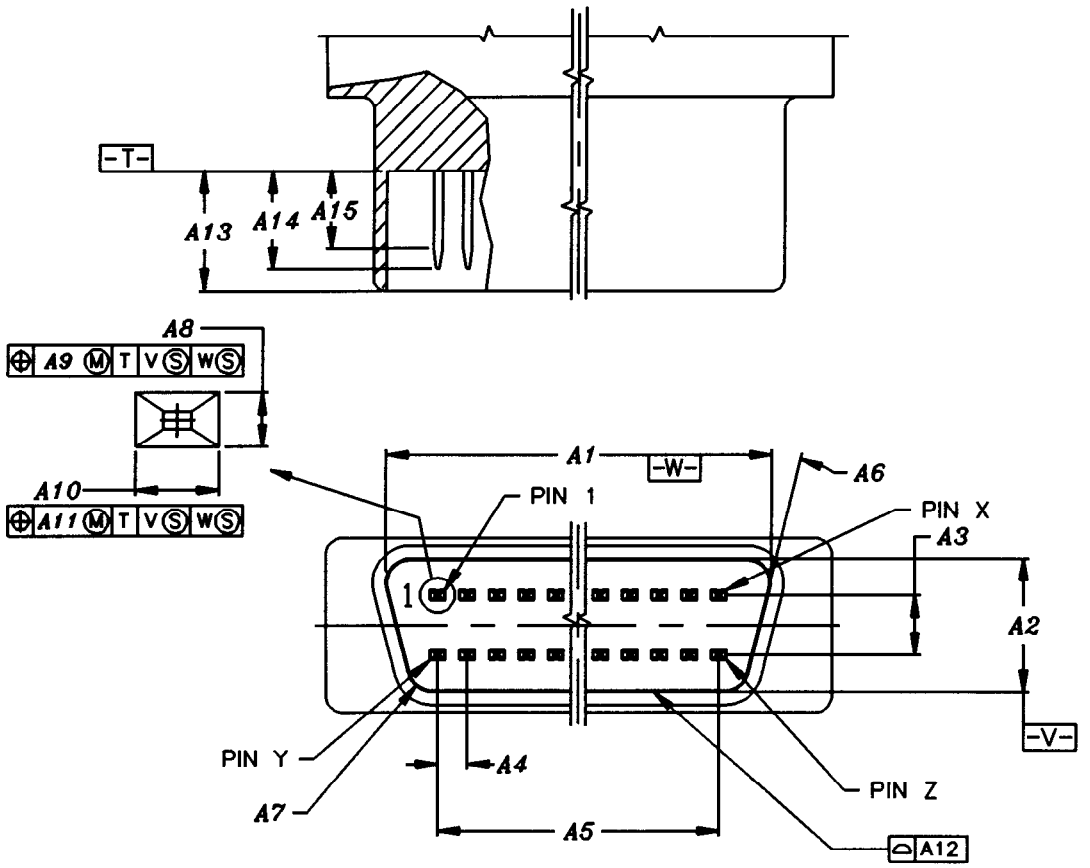

Dimensions	50 Position		68 Position	
	mm	in	mm	in
A1	34,85	1,372	46,28	1,822
A2	5,69	0,224	5,69	0,224
A3	2,54	0,100	2,54	0,100
A4	1,27	0,050	1,27	0,050
A5	30,48	1,200	41,91	1,650
A6	15°	15°	15°	15°
A7	1,04 R	0,041 R	1,04 R	0,041 R
A8	0,40± 0,010	0,0156± 0,0004	0,40± 0,010	0,0156± 0,0004
A9	0,23	0,009	0,23	0,009
A10	0,60± 0,03	0,024± 0,001	0,60± 0,03	0,024± 0,001
A11	0,23	0,009	0,23	0,009
A12	0,05	0,002	0,05	0,002
A13	5,15± 0,15	0,203± 0,006	5,15± 0,15	0,203± 0,006
A14	4,39 max.	0,173 max.	4,39 max.	0,173 max.
A15	3,02 min.	0,119 min.	3,02 min.	0,119 min.
Pin X	25		34	
Pin Y	26		35	
Pin Z	50		68	

Figure 2 - 50/68-contact non-shielded high-density cable connector (A cable/B cable)

Copyright International Organization for Standardization
Provided by IHS under license with ISO
No reproduction or networking permitted without license from IHS
Not for Resale

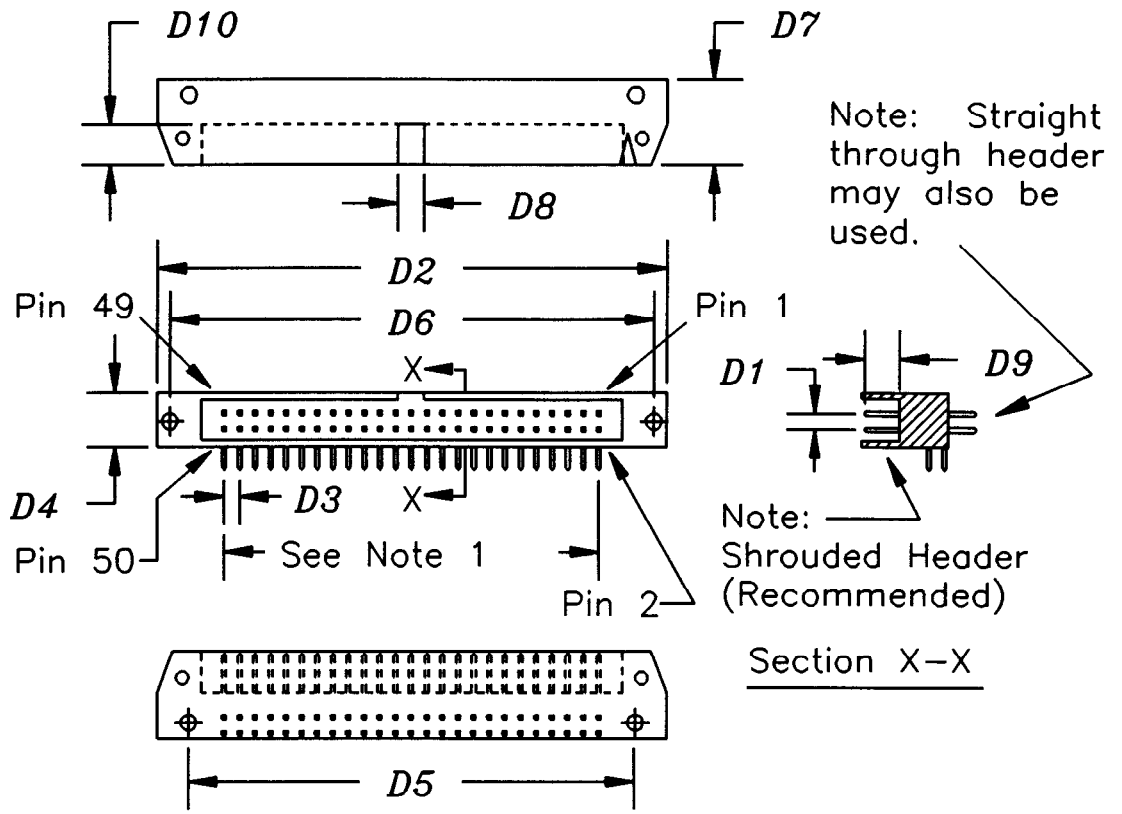

Dimension	mm	in	Comments
D1	2,54	0,100	
D2	82,80	3,260	Reference Only
D3	2,54	0,100	
D4	8,89	0,350	Reference Only
D5	72,64	2,860	Reference Only
D6	78,74	3,100	Reference Only
D7	13,94	0,549	Reference Only
D8	4,19± 0,25	0,165± 0,010	
D9	6,09	0,240	
D10	6,60	0,260	Reference Only

NOTES

1 Two rows of twenty five contacts on 2,540 mm (0,100 in) spacing = 60,960 mm (2,400 in).

2 Tolerances ± 0,127 mm (0,005 in) non–cumulative, unless specified otherwise.

Figure 3 - 50-contact non-shielded low-density SCSI device connector (A cable)

Copyright International Organization for Standardization
Provided by IHS under license with ISO
No reproduction or networking permitted without license from IHS
Not for Resale

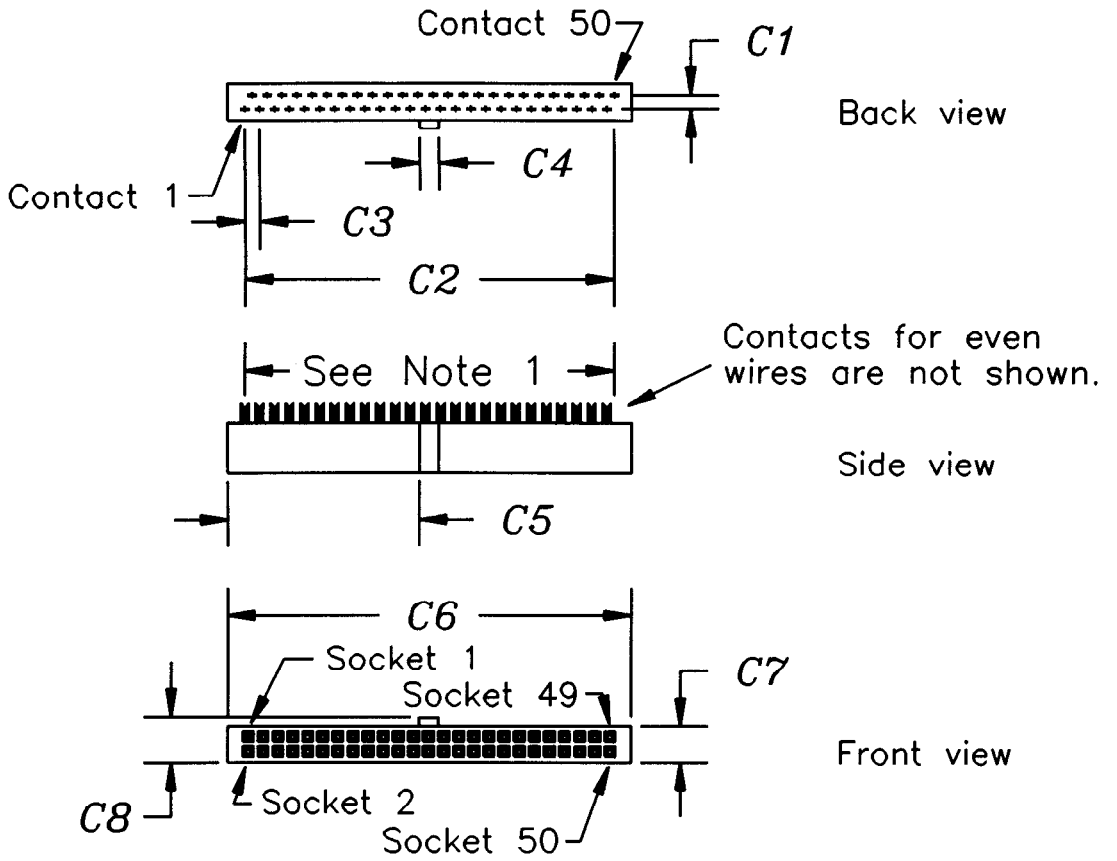

Dimensions	mm	in	Comments
C1	2,54	0,100	
C2	60,96	2,400	
C3	2,54	0,100	
C4	3,30	0,130	
C5	32,38	1,275	
C6	68,07	2,680	
C7	6,10	0,240	
C8	7,62	0,300	Maximum

NOTES

1 Fifty contacts on 1,270 mm (0,050 in) staggered spacing = 62,230 mm (2,450 in) [reference only].

2 Tolerances ±0,127 mm (0,005) non-cumulative, unless specified otherwise.

3 Connector cover and strain relief are optional.

Figure 4 - 50-contact non-shielded low-density cable connector (A cable)

Copyright International Organization for Standardization
Provided by IHS under license with ISO
No reproduction or networking permitted without license from IHS
Not for Resale

5.3.2 Shielded connector requirements

Two shielded connector alternatives are specified for the A cable and one shielded connector is specified for the B cable. The connector shielding system should provide a d.c. resistance of less than 10 mΩ from the cable shield at its termination point to the SCSI device enclosure.

In order to support daisy-chain connections, SCSI devices that use shielded connectors should provide two shielded device connectors on the device enclosure. These two connectors may be wired one-to-one with a stub to the SCSI device's drivers and receivers provided the maximum stub length is not violated. Alternatively, two cables may be run from the two shielded connectors to the drivers and receivers so that the maximum stub length is not violated. The length of the cable within the device enclosure is included when calculating the total cable length of the SCSI bus.

NOTE 9 SCSI-1 defined three shielded connector systems in an annex. The alternative 1 shielded connector of SCSI-1 has been replaced by a high-density connector in this International Standard. The alternative 2 shielded connector remains unchanged. The EUROCARD boxes shielded connector system of SCSI-1 has been deleted in this International Standard.

5.3.2.1 Shielded connector alternative 1 - A cable

The shielded high-density SCSI device connector for the A cable (see figure 5) is a 50-conductor connector consisting of two rows of 25 female contacts with adjacent contacts 1,27 mm (0,05 in) apart. The non-mating portion of the connector is shown for reference only.

The shielded high-density cable connector for the A cable (see figure 6) is a 50-conductor connector consisting of two rows of 25 male contacts with adjacent contacts 1,27 mm (0,05 in) apart. The non-mating portion of the connector is shown for reference only.

5.3.2.2 Shielded connector alternative 2 - A cable

The shielded low-density device connector for the A cable (see figure 7) is a 50-conductor connector consisting of two rows of ribbon contacts spaced 2,16 mm (0,085 in) apart. The non-mating portion of the connector is shown for reference only.

The shielded low-density cable connector for the A cable (see figure 8) is a 50-conductor connector consisting of two rows of ribbon contacts spaced 2,16 mm (0,085 in) apart. The non-mating portion of the connector is shown for reference only.

5.3.2.3 Shielded connector - B cable

The shielded high-density SCSI device connector for the B cable (see figure 5) is a 68-conductor connector consisting of two rows of 34 female contacts with adjacent contacts 1,27 mm (0,05 in) apart. The non-mating portion of the connector is shown for reference only.

The shielded high-density cable connector for the B cable (see figure 6) is a 68-conductor connector consisting of two rows of 34 male contacts with adjacent contacts 1,27 mm (0,05 in) apart. The non-mating portion of the connector is shown for reference only.

Copyright International Organization for Standardization
Provided by IHS under license with ISO
No reproduction or networking permitted without license from IHS Not for Resale

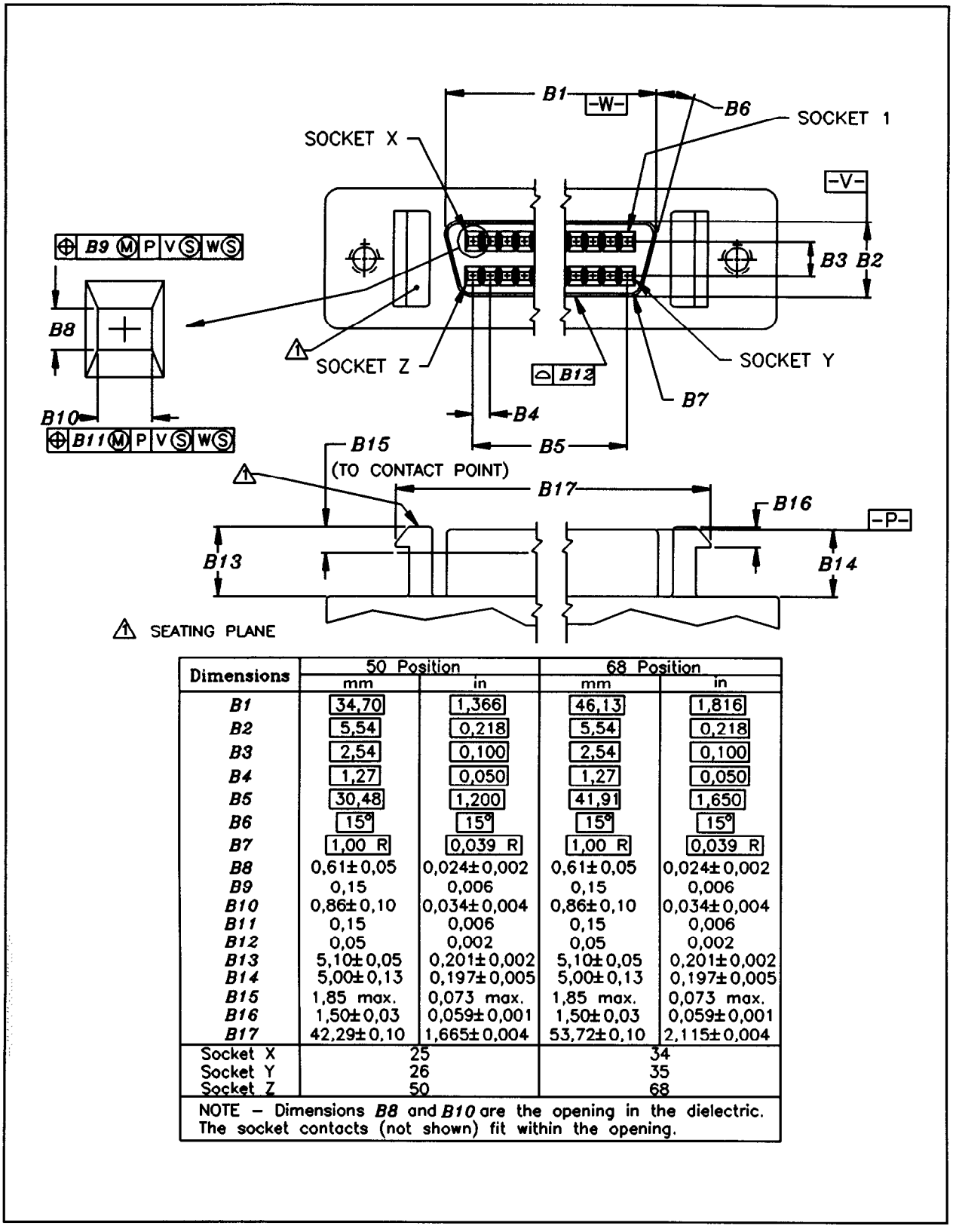

Dimensions	50 Position		68 Position	
	mm	in	mm	in
B1	34,70	1,366	46,13	1,816
B2	5,54	0,218	5,54	0,218
B3	2,54	0,100	2,54	0,100
B4	1,27	0,050	1,27	0,050
B5	30,48	1,200	41,91	1,650
B6	15°	15°	15°	15°
B7	1,00 R	0,039 R	1,00 R	0,039 R
B8	0,61±0,05	0,024±0,002	0,61±0,05	0,024±0,002
B9	0,15	0,006	0,15	0,006
B10	0,86±0,10	0,034±0,004	0,86±0,10	0,034±0,004
B11	0,15	0,006	0,15	0,006
B12	0,05	0,002	0,05	0,002
B13	5,10±0,05	0,201±0,002	5,10±0,05	0,201±0,002
B14	5,00±0,13	0,197±0,005	5,00±0,13	0,197±0,005
B15	1,85 max.	0,073 max.	1,85 max.	0,073 max.
B16	1,50±0,03	0,059±0,001	1,50±0,03	0,059±0,001
B17	42,29±0,10	1,665±0,004	53,72±0,10	2,115±0,004
Socket X	25		34	
Socket Y	26		35	
Socket Z	50		68	

NOTE – Dimensions *B8* and *B10* are the opening in the dielectric. The socket contacts (not shown) fit within the opening.

Figure 5 - 50/68-contact shielded high-density SCSI device connector (A cable/B cable)

Copyright International Organization for Standardization
Provided by IHS under license with ISO
No reproduction or networking permitted without license from IHS
Not for Resale

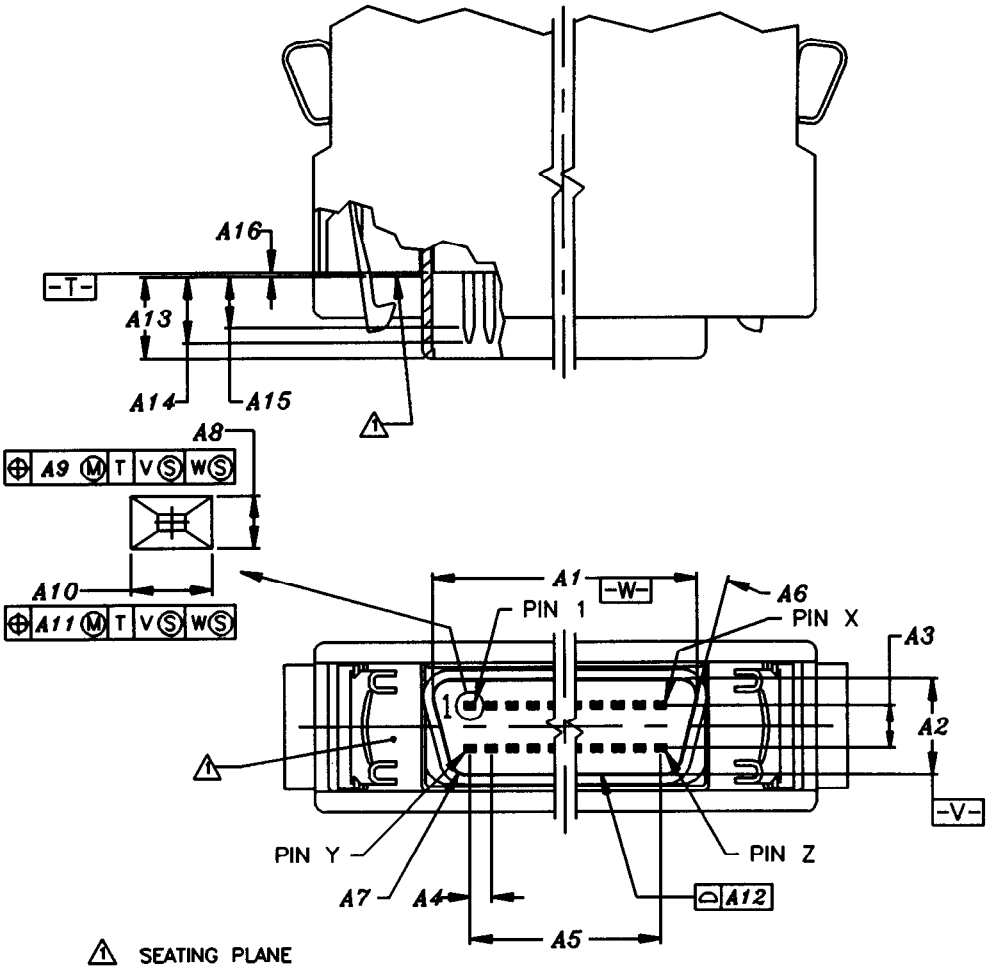

Dimensions	50 Position		68 Position	
	mm	in	mm	in
A1	34,85	1,372	46,28	1,822
A2	5,69	0,224	5,69	0,224
A3	2,54	0,100	2,54	0,100
A4	1,27	0,050	1,27	0,050
A5	30,48	1,200	41,91	1,650
A6	15°	15°	15°	15°
A7	1,04 R	0,041 R	1,04 R	0,041 R
A8	0,40±0,010	0,0156±0,0004	0,40±0,010	0,0156±0,0004
A9	0,23	0,009	0,23	0,009
A10	0,60±0,03	0,024±0,001	0,60±0,03	0,024±0,001
A11	0,23	0,009	0,23	0,009
A12	0,05	0,002	0,05	0,002
A13	4,90±0,10	0,193±0,004	4,90±0,10	0,193±0,004
A14	4,27 max.	0,168 max.	4,27 max.	0,168 max.
A15	2,64 min.	0,104 min.	2,64 min.	0,104 min.
A16	0,25±0,13	0,010±0,005	0,25±0,13	0,010±0,005
Pin X	25		34	
Pin Y	26		35	
Pin Z	50		68	

Figure 6 - 50/68-contact shielded high-density cable connector (A cable/B cable)

Copyright International Organization for Standardization
Provided by IHS under license with ISO
No reproduction or networking permitted without license from IHS
Not for Resale

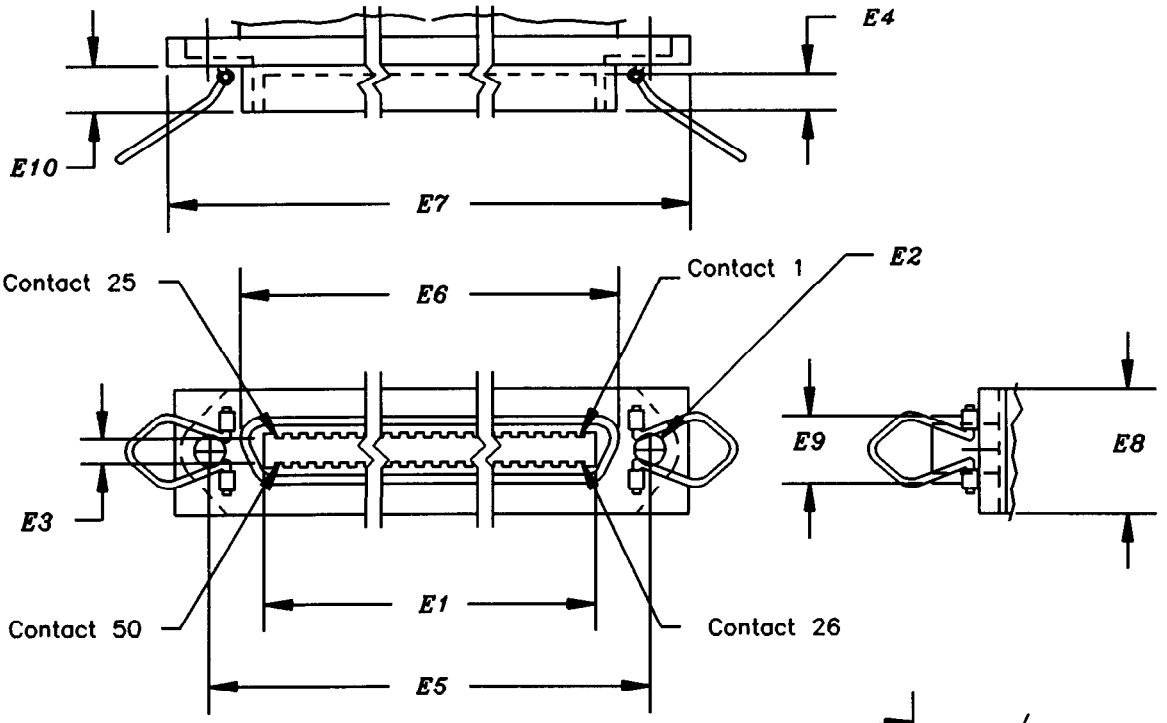

Dimensions	mm	in
E1	56,39 min.	2,220 min.
E2 1)	2,62 min.	0,103 min.
E3	3,99 min.	0,157 min.
E4	5,84 min.	0,230 min.
E5	74,85	2,947
E6	64,29 max.	2,531 max.
E7 2)	83,06	3,270
E8 2)	15,24	0,600
E9	12,04 max.	0,474 max.
E10	9,78 max.	0,385 max.
E11	2,16	0,085
E12	15° ± 2°	15° ± 2°

NOTE – Tolerances ± 0,127 mm (0,005 in) non-cumulative, unless specified otherwise.

1) This dimension is selected to accomodate 4–40 or 6–32 threaded screws.

2) These dimensions are shown for reference only.

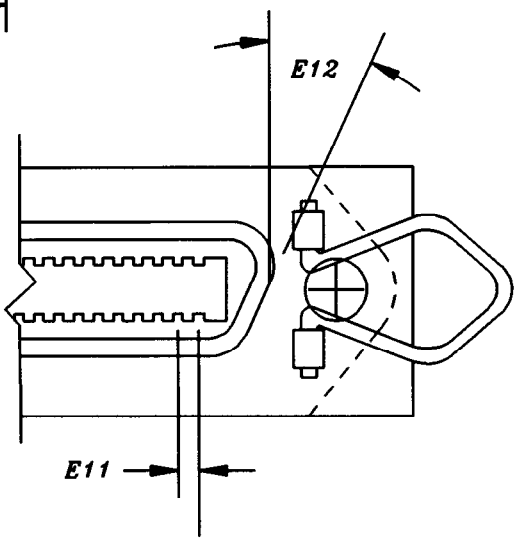

Figure 7 - 50-contact shielded low-density SCSI device connector

Copyright International Organization for Standardization
Provided by IHS under license with ISO
No reproduction or networking permitted without license from IHS
Not for Resale

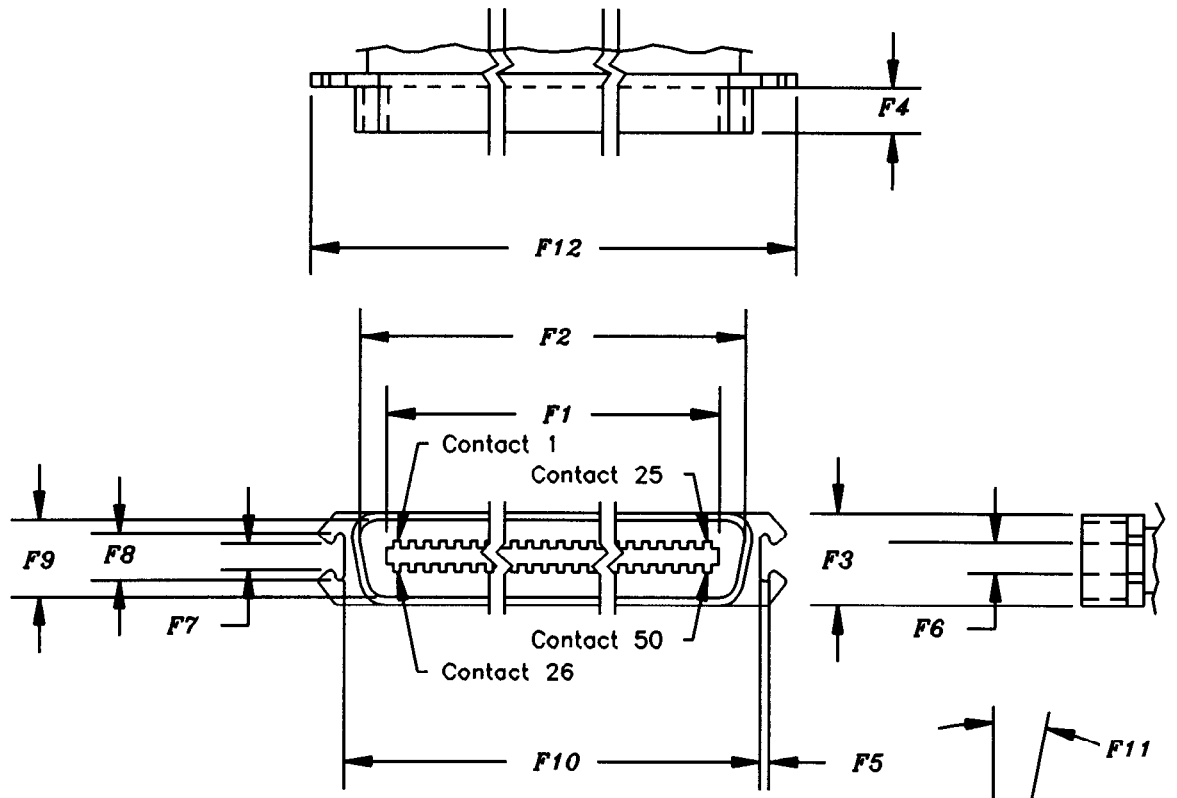

Dimensions	mm	in
F1	56,26 max.	2,215 max.
F2	64,29 min.	2,531 min.
F3 1)	15,24	0,600
F4	7,29 min.	0,287 min.
F5 1)	1,02	0,040
F6	4,09 max.	0,161 max.
F7 1)	5,08	0,200
F8 1)	6,10	0,240
F9	12,04 min.	0,474 min.
F10 1)	68,45	2,695
F11	15° ± 2°	15° ± 2°
F12 1)	76,71	3,020
F13	2,16	0,085

NOTE – Tolerances ± 0,127 mm (0,005 in) non-cumulative, unless specified otherwise.

1) These dimensions are shown for reference only.

Figure 8 - 50-contact shielded low-density cable connector

Copyright International Organization for Standardization
Provided by IHS under license with ISO
No reproduction or networking permitted without license from IHS
Not for Resale

5.3.3 Connector contact assignments

The connector contact assignments are defined in tables 1 through 5. Table 1 defines which of the other four tables to use and which set of contact assignments to use.

Table 1 - Cross-reference to connector contact assignments

Connector type	Driver/ receiver type	Cable	Connector figure	Contact assignment table	Contact set
Non-shielded alternative 1	Single-ended	A	1 & 2	2	2
Non-shielded alternative 1	Single-ended	B	1 & 2	3	
Non-shielded alternative 1	Differential	A	1 & 2	4	2
Non-shielded alternative 1	Differential	B	1 & 2	5	
Non-shielded alternative 2	Single-ended	A	3 & 4	2	1
Non-shielded alternative 2	Differential	A	3 & 4	4	1
Shielded alternative 1	Single-ended	A	5 & 6	2	2
Shielded alternative 1	Single-ended	B	5 & 6	3	
Shielded alternative 1	Differential	A	5 & 6	4	2
Shielded alternative 1	Differential	B	5 & 6	5	
Shielded alternative 2	Single-ended	A	7 & 8	2	2
Shielded alternative 2	Differential	A	7 & 8	4	2

Copyright International Organization for Standardization
Provided by IHS under license with ISO
No reproduction or networking permitted without license from IHS Not for Resale

Table 2 - Single-ended contact assignments - A cable

Signal name	Connector contact number		Cable conductor number		Connector contact number		Signal name
	Set 2	Set 1			Set 1	Set 2	
GROUND	1	1	1	2	2	26	-DB(0)
GROUND	2	3	3	4	4	27	-DB(1)
GROUND	3	5	5	6	6	28	-DB(2)
GROUND	4	7	7	8	8	29	-DB(3)
GROUND	5	9	9	10	10	30	-DB(4)
GROUND	6	11	11	12	12	31	-DB(5)
GROUND	7	13	13	14	14	32	-DB(6)
GROUND	8	15	15	16	16	33	-DB(7)
GROUND	9	17	17	18	18	34	-DB(P)
GROUND	10	19	19	20	20	35	GROUND
GROUND	11	21	21	22	22	36	GROUND
RESERVED	12	23	23	24	24	37	RESERVED
OPEN	13	25	25	26	26	38	TERMPWR
RESERVED	14	27	27	28	28	39	RESERVED
GROUND	15	29	29	30	30	40	GROUND
GROUND	16	31	31	32	32	41	-ATN
GROUND	17	33	33	34	34	42	GROUND
GROUND	18	35	35	36	36	43	-BSY
GROUND	19	37	37	38	38	44	-ACK
GROUND	20	39	39	40	40	45	-RST
GROUND	21	41	41	42	42	46	-MSG
GROUND	22	43	43	44	44	47	-SEL
GROUND	23	45	45	46	46	48	-C/D
GROUND	24	47	47	48	48	49	-REQ
GROUND	25	49	49	50	50	50	-I/O

NOTES
1 The minus sign next to a signal indicates active low.
2 The conductor number refers to the conductor position when using 1,270 mm (0,050) inch centerline flat ribbon cable with a low-density connector or when using 0,635 mm (0,025) inch centerline flat ribbon cable with a high-density connector. Other cable types may be used to implement equivalent contact assignments.
3 Two sets of contact assignments are shown. Refer to table 1 to determine which set of contacts applies to each connector.
4 See 5.4.4 for a definition of the RESERVED lines.

Copyright International Organization for Standardization
Provided by IHS under license with ISO
No reproduction or networking permitted without license from IHS
Not for Resale

Table 3 - Single-ended contact assignments - B cable

Signal name	Connector contact number	Cable conductor number		Connector contact number	Signal name
GROUND	1	1	2	35	GROUND
GROUND	2	3	4	36	-DB(8)
GROUND	3	5	6	37	-DB(9)
GROUND	4	7	8	38	-DB(10)
GROUND	5	9	10	39	-DB(11)
GROUND	6	11	12	40	-DB(12)
GROUND	7	13	14	41	-DB(13)
GROUND	8	15	16	42	-DB(14)
GROUND	9	17	18	43	-DB(15)
GROUND	10	19	20	44	-DB(P1)
GROUND	11	21	22	45	-ACKB
GROUND	12	23	24	46	GROUND
GROUND	13	25	26	47	-REQB
GROUND	14	27	28	48	-DB(16)
GROUND	15	29	30	49	-DB(17)
GROUND	16	31	32	50	-DB(18)
TERMPWRB	17	33	34	51	TERMPWRB
TERMPWRB	18	35	36	52	TERMPWRB
GROUND	19	37	38	53	-DB(19)
GROUND	20	39	40	54	-DB(20)
GROUND	21	41	42	55	-DB(21)
GROUND	22	43	44	56	-DB(22)
GROUND	23	45	46	57	-DB(23)
GROUND	24	47	48	58	-DB(P2)
GROUND	25	49	50	59	-DB(24)
GROUND	26	51	52	60	-DB(25)
GROUND	27	53	54	61	-DB(26)
GROUND	28	55	56	62	-DB(27)
GROUND	29	57	58	63	-DB(28)
GROUND	30	59	60	64	-DB(29)
GROUND	31	61	62	65	-DB(30)
GROUND	32	63	64	66	-DB(31)
GROUND	33	65	66	67	-DB(P3)
GROUND	34	67	68	68	GROUND

NOTES
1 The minus sign next to a signal indicates active low.
2 The conductor number refers to the conductor position when using 0,635 mm (0,025 inch) centreline flat ribbon cable. Other cable types may be used to implement contact assignments.

NOTE 10 An alternate 16-bit single-cable solution and an alternate 32-bit solution is being defined and the B cable definition will be removed in a future version of SCSI.

Copyright International Organization for Standardization
Provided by IHS under license with ISO
No reproduction or networking permitted without license from IHS Not for Resale

Table 4 - Differential contact assignments - A cable

Signal name	Connector contact number		Cable conductor number		Connector contact number		Signal name
	Set 2	Set 1			Set 1	Set 2	
GROUND	1	1	1	2	2	26	GROUND
+DB(0)	2	3	3	4	4	27	-DB(0)
+DB(1)	3	5	5	6	6	28	-DB(1)
+DB(2)	4	7	7	8	8	29	-DB(2)
+DB(3)	5	9	9	10	10	30	-DB(3)
+DB(4)	6	11	11	12	12	31	-DB(4)
+DB(5)	7	13	13	14	14	32	-DB(5)
+DB(6)	8	15	15	16	16	33	-DB(6)
+DB(7)	9	17	17	18	18	34	-DB(7)
+DB(P)	10	19	19	20	20	35	-DB(P)
DIFFSENS	11	21	21	22	22	36	GROUND
RESERVED	12	23	23	24	24	37	RESERVED
TERMPWR	13	25	25	26	26	38	TERMPWR
RESERVED	14	27	27	28	28	39	RESERVED
+ATN	15	29	29	30	30	40	-ATN
GROUND	16	31	31	32	32	41	GROUND
+BSY	17	33	33	34	34	42	-BSY
+ACK	18	35	35	36	36	43	-ACK
+RST	19	37	37	38	38	44	-RST
+ACK	18	35	35	36	36	43	-ACK
+RST	19	37	37	38	38	44	-RST
+MSG	20	39	39	40	40	45	-MSG
+SEL	21	41	41	42	42	46	-SEL
+C/D	22	43	43	44	44	47	-C/D
+REQ	23	45	45	46	46	48	-REQ
+I/O	24	47	47	48	48	49	-I/O
GROUND	25	49	49	50	50	50	GROUND

NOTES
1 The conductor number refers to the conductor position when using 1,270 mm (0,050) inch centerline flat ribbon cable with a low-density connector or when using 0,635 mm (0,025) inch centerline flat ribbon cable with a high-density connector. Other cable types may be used to implement equivalent contact assignments.
2 Two sets of contact assignments are shown. Refer to table 1 to determine which set of contacts applies to each connector.
3 See 5.4.4 for a definition of the RESERVED lines.

Copyright International Organization for Standardization
Provided by IHS under license with ISO
No reproduction or networking permitted without license from IHS
Not for Resale

Table 5 - Differential contact assignments - B cable

Signal name	Connector contact number	Cable conductor number		Connector contact number	Signal name
GROUND	1	1	2	35	GROUND
+DB(8)	2	3	4	36	-DB(8)
+DB(9)	3	5	6	37	-DB(9)
+DB(10)	4	7	8	38	-DB(10)
+DB(11)	5	9	10	39	-DB(11)
+DB(12)	6	11	12	40	-DB(12)
+DB(13)	7	13	14	41	-DB(13)
+DB(14)	8	15	16	42	-DB(14)
+DB(15)	9	17	18	43	-DB(15)
+DB(P1)	10	19	20	44	-DB(P1)
+ACKB	11	21	22	45	-ACKB
GROUND	12	23	24	46	DIFFSENS
+REQB	13	25	26	47	-REQB
+DB(16)	14	27	28	48	-DB(16)
+DB(17)	15	29	30	49	-DB(17)
+DB(18)	16	31	32	50	-DB(18)
TERMPWRB	17	33	34	51	TERMPWRB
TERMPWRB	18	35	36	52	TERMPWRB
+DB(19)	19	37	38	53	-DB(19)
+DB(20)	20	39	40	54	-DB(20)
+DB(21)	21	41	42	55	-DB(21)
+DB(22)	22	43	44	56	-DB(22)
+DB(23)	23	45	46	57	-DB(23)
+DB(P2)	24	47	48	58	-DB(P2)
+DB(24)	25	49	50	59	-DB(24)
+DB(25)	26	51	52	60	-DB(25)
+DB(26)	27	53	54	61	-DB(26)
+DB(27)	28	55	56	62	-DB(27)
+DB(28)	29	57	58	63	-DB(28)
+DB(29)	30	59	60	64	-DB(29)
+DB(30)	31	61	62	65	-DB(30)
+DB(31)	32	63	64	66	-DB(31)
+DB(P3)	33	65	66	67	-DB(P3)
GROUND	34	67	68	68	GROUND

NOTE
The conductor number refers to the conductor position when using 0,635 mm (0,025 inch) centreline flat ribbon cable. Other cable types may be used to implement contact assignments.

NOTE 11 An alternate 16-bit single-cable solution and an alternate 32-bit solution is being defined and the B cable definition will be removed in a future version of SCSI.

Copyright International Organization for Standardization
Provided by IHS under license with ISO
No reproduction or networking permitted without license from IHS Not for Resale

5.4 Electrical description

For the measurements in this subclause, SCSI bus termination is assumed to be external to the SCSI device. See 5.4.4 for the terminating requirements for the RESERVED lines. SCSI devices may have the provision for allowing optional internal termination.

5.4.1 Single-ended alternative

All signals not defined as RESERVED, GROUND, TERMPWR or OPEN shall be terminated at both ends of the bus. The implementor may choose one of the following two methods to terminate each end (see figures 9 and 10):

a) The termination of each signal shall consist of 220 Ω (±5%) to the TERMPWR line and 330 Ω (±5%) to ground. Using resistors with ±1% tolerance improves noise margins.
b) The termination of each signal shall meet these requirements:
   1) The terminators shall each supply a characteristic impedance between 100 Ω and 132 Ω.
   2) The terminators shall be powered by the TERMPWR line and may receive additional power from other sources but shall not require such additional power for proper operation (see 5.4.3).
   3) The current available to any signal line driver shall not exceed 48 mA when the driver asserts the line and pulls it to 0,5 V d.c. Only 44,8 mA of this current shall be available from the two terminators.
   4) The voltage on all released signal lines shall be at least 2,5 V d.c. when the TERMPWR line is within specified values (see 5.4.3).
   5) These conditions shall be met with any legal configuration of targets and initiators as long as at least one device is supplying TERMPWR.

The first termination method above is the same as in SCSI-1. The second termination method is recommended for better signal quality.

5.4.1.1 Output characteristics

All signals shall use open-collector three-state drivers. Each signal driven by an SCSI device shall have the following output characteristics when measured at the SCSI device's connector:

V_{OL} (low-level output voltage) = 0,0 to 0,5 V d.c. at 48 mA sinking (signal assertion)

V_{OH} (high-level output voltage) = 2,5 to 5,25 V d.c. (signal negation)

5.4.1.2 Input characteristics

SCSI devices with power on shall meet the following electrical characteristics on each signal (including both receivers and passive drivers):

V_{IL} (low-level input voltage) = 0,0 V d.c. to 0,8 V d.c. (signal true)
V_{IH} (high-level input voltage) = 2,0 V d.c. to 5,25 V d.c. (signal false)
I_{IL} (low-level input current) = -0,4 mA to 0,0 mA at V_I = 0,5 V d.c.
I_{IH} (high-level input current) = 0,0 mA to 0,1 mA at V_I = 2,7 V d.c.
Minimum input hysteresis = 0,2 V d.c.
Maximum input capacitance = 25 pF (measured at the device connector closest to the stub, if any, within the device)

It is recommended that SCSI devices with power off also meet the above I_{IL} and I_{IH} electrical characteristics on each signal.

To achieve maximum noise immunity and to assure proper operation with complex cable configurations, it is recommended that the nominal switching threshold be approximately 1,4 V.

Copyright International Organization for Standardization
Provided by IHS under license with ISO
No reproduction or networking permitted without license from IHS Not for Resale

5.4.2 Differential alternative

All signals consist of two lines denoted +SIGNAL and -SIGNAL. A signal is true when +SIGNAL is more positive than -SIGNAL, and a signal is false when -SIGNAL is more positive than +SIGNAL. All assigned signals of the A and B cables described in 5.6 shall be terminated at each end of the cable with a terminator network as shown in figure 11. Resistor tolerances in the terminator network shall be ± 5 % or less.

The DIFFSENS signal of the connector is used as an active high enable for the differential drivers. If a single-ended device or terminator is inadvertently connected, this signal is grounded, disabling the differential drivers (see figure 12).

The characteristic impedance of differential terminators is 122 Ω.

5.4.2.1 Output characteristics

Each signal driven by an SCSI device shall have the following output characteristics when measured at the SCSI device's connector:

V_{OL} (low-level output voltage) = 1,7 V maximum at I_{OL} (low-level output current) = 55 mA.
V_{OH} (high-level output voltage) = 2,7 V minimum at I_{OH} (high-level output current) = -55 mA.
V_{OD} (differential output voltage) = 1,0 V minimum with common-mode voltage ranges from -7 V d.c. to +12 V d.c.

V_{OL} and V_{OH} shall be as measured between the output terminal and the SCSI device's logic ground reference.

The output characteristics shall additionally conform to ISO/IEC 8482:1993.

5.4.2.2 Input characteristics

SCSI devices shall meet the following electrical characteristics on each signal (including both receivers and passive drivers):

I_I (input current on either input) = $\pm$ 2,0 mA maximum.
Maximum input capacitance = 25 pF.

The I_I requirement shall be met with the input voltage varying between -7 V d.c. and +12 V d.c., with power on or off, and with the hysteresis equaling 35 mV, minimum.

The input characteristics shall additionally conform to ISO/IEC 8482:1993.

5.4.3 Terminator power

SCSI initiators shall supply terminator power to the TERMPWR contact(s) and, if it implements the wide SCSI option, to the TERMPWRB contacts. This power shall be supplied through a diode or similar semiconductor that prevents backflow of power to the SCSI device. Targets and SCSI devices that become temporary initiators (e.g. targets which implement the COPY command or asynchronous event notification) are not required to supply terminator power. Any SCSI device may supply terminator power. Interface error rates are lower if the termination voltage is maintained at the extreme ends of the cable.

All terminators independent of location shall be powered from the TERMPWR and TERMPWRB contact(s). The use of keyed connectors is recommended in SCSI devices that provide terminator power to prevent accidental grounding or the incorrect connection of terminator power.

NOTE 12 Regulatory agencies may require limiting maximum (short circuit) current to the terminator power lines. Recommended current limiting is 1,5 A for TERMPWR and 2 A for TERMPWRB. For systems utilizing multiple initiators, the initiators may be configured with option straps or current limiting devices. Maximum available current should not exceed 5 A.

Copyright International Organization for Standardization
Provided by IHS under license with ISO
No reproduction or networking permitted without license from IHS Not for Resale

SCSI devices shall sink no more than 1,0 mA from TERMPWR and no more than 1,0 mA from TERMPWRB except to power an optional internal terminator.

Single-ended SCSI devices providing terminator power on cable A shall have the following characteristics:
V_{Term} = 4,25 V d.c. to 5,25 V d.c.
900 mA minimum source drive capability

Differential SCSI devices providing terminator power on cable A shall have the following characteristics:
V_{Term} = 4,0 V d.c. to 5,25 V d.c.
600 mA minimum source drive capability

Single-ended SCSI devices providing terminator power on cable B shall have the following characteristics:
V_{Term} = 4,5 V d.c. to 5,25 V d.c.
1500 mA minimum source drive capability

Differential SCSI devices providing terminator power on cable B shall have the following characteristics:
V_{Term} = 4,0 V d.c. to 5,25 V d.c.
1000 mA minimum source drive capability

NOTE 13 It is recommended that the terminator power lines be decoupled at each terminator with at least a 2,2 μF high-frequency capacitor to improve signal quality.

Copyright International Organization for Standardization
Provided by IHS under license with ISO
No reproduction or networking permitted without license from IHS Not for Resale

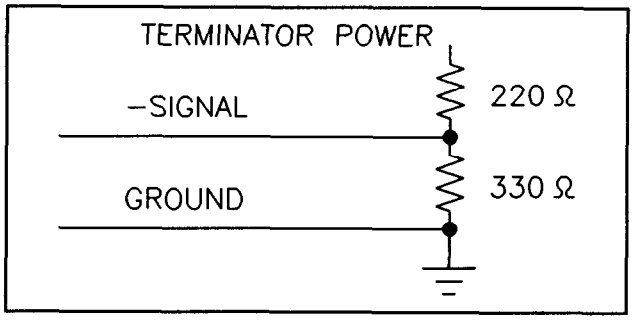

Figure 9 - Alternative 1 termination for single-ended devices

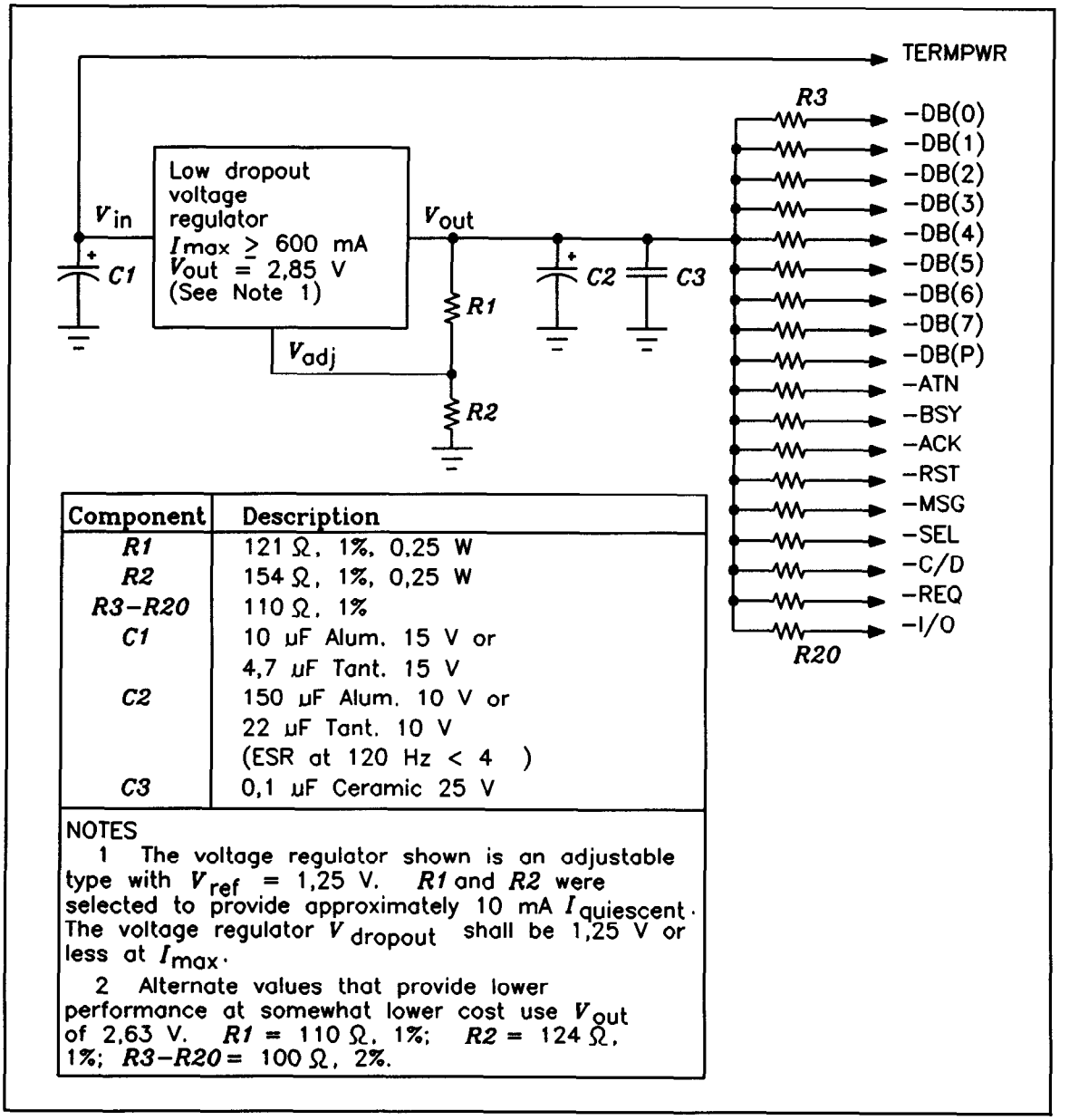

Component	Description
R1	121 Ω, 1%, 0,25 W
R2	154 Ω, 1%, 0,25 W
R3–R20	110 Ω, 1%
C1	10 µF Alum. 15 V or 4,7 µF Tant. 15 V
C2	150 µF Alum. 10 V or 22 µF Tant. 10 V (ESR at 120 Hz < 4)
C3	0,1 µF Ceramic 25 V

NOTES

1 The voltage regulator shown is an adjustable type with V_{ref} = 1,25 V. *R1* and *R2* were selected to provide approximately 10 mA $I_{quiescent}$. The voltage regulator $V_{dropout}$ shall be 1,25 V or less at I_{max}.

2 Alternate values that provide lower performance at somewhat lower cost use V_{out} of 2,63 V. *R1* = 110 Ω, 1%; *R2* = 124 Ω, 1%; *R3–R20* = 100 Ω, 2%.

Figure 10 - Alternative 2 termination for single-ended devices

Copyright International Organization for Standardization
Provided by IHS under license with ISO
No reproduction or networking permitted without license from IHS
Not for Resale

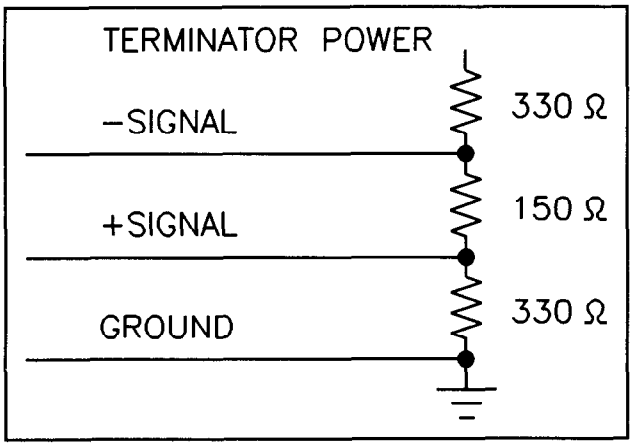

Figure 11 - Termination for differential devices

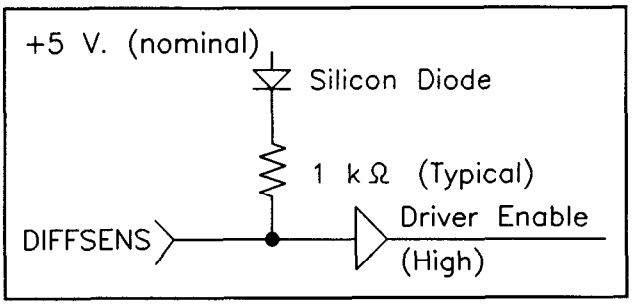

Figure 12 - Differential driver protection circuit

5.4.4 RESERVED lines

The lines labelled RESERVED in the A cable contact assignment tables (table 2 and table 4) shall be connected to ground in the bus terminator assemblies or in the end devices on the SCSI cable. The RESERVED lines should be open in the other SCSI devices, but may be connected to ground.

Copyright International Organization for Standardization
Provided by IHS under license with ISO
No reproduction or networking permitted without license from IHS
Not for Resale

5.5 SCSI bus

Communication on the SCSI bus is allowed between only two SCSI devices at any given time. There is a maximum of eight SCSI devices. Each SCSI device has an SCSI ID bit assigned as shown in figure 13. Three sample system configurations are shown in figure 14. There can be any combination of initiators and targets provided there is at least one of each.

When two SCSI devices communicate on the SCSI bus, one acts as an initiator and the other acts as a target. The initiator originates an operation and the target performs the operation. An SCSI device usually has a fixed role as an initiator or target, but some devices may be able to assume either role.

An initiator may address up to eight peripheral devices that are connected to a target. The target may be physically housed within the peripheral device in which case the peripheral device is referred to as an embedded SCSI device.

Certain SCSI bus functions are assigned to the initiator and certain SCSI bus functions are assigned to the target. The initiator may arbitrate for the SCSI bus and select a particular target. The target may request the transfer of COMMAND, DATA, STATUS, or other information on the DATA BUS, and in some cases it may arbitrate for the SCSI bus and reselect an initiator for the purpose of continuing an operation.

Information transfers on the DATA BUS are asynchronous and follow a defined REQ/ACK handshake protocol. One byte of information may be transferred with each handshake on the A cable and, if the wide data transfer option is implemented, one or three bytes of information may be transferred with each handshake on the B cable. An option is defined for synchronous data transfer.

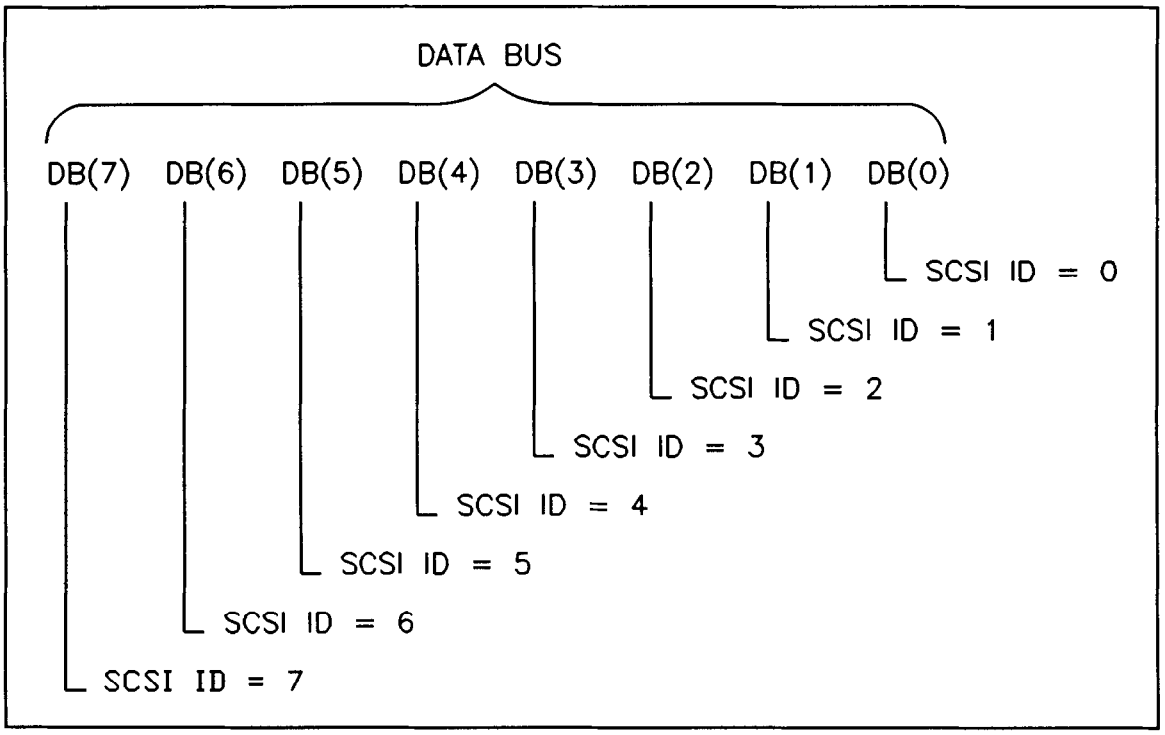

Figure 13 - SCSI ID bits

Copyright International Organization for Standardization
Provided by IHS under license with ISO
No reproduction or networking permitted without license from IHS Not for Resale

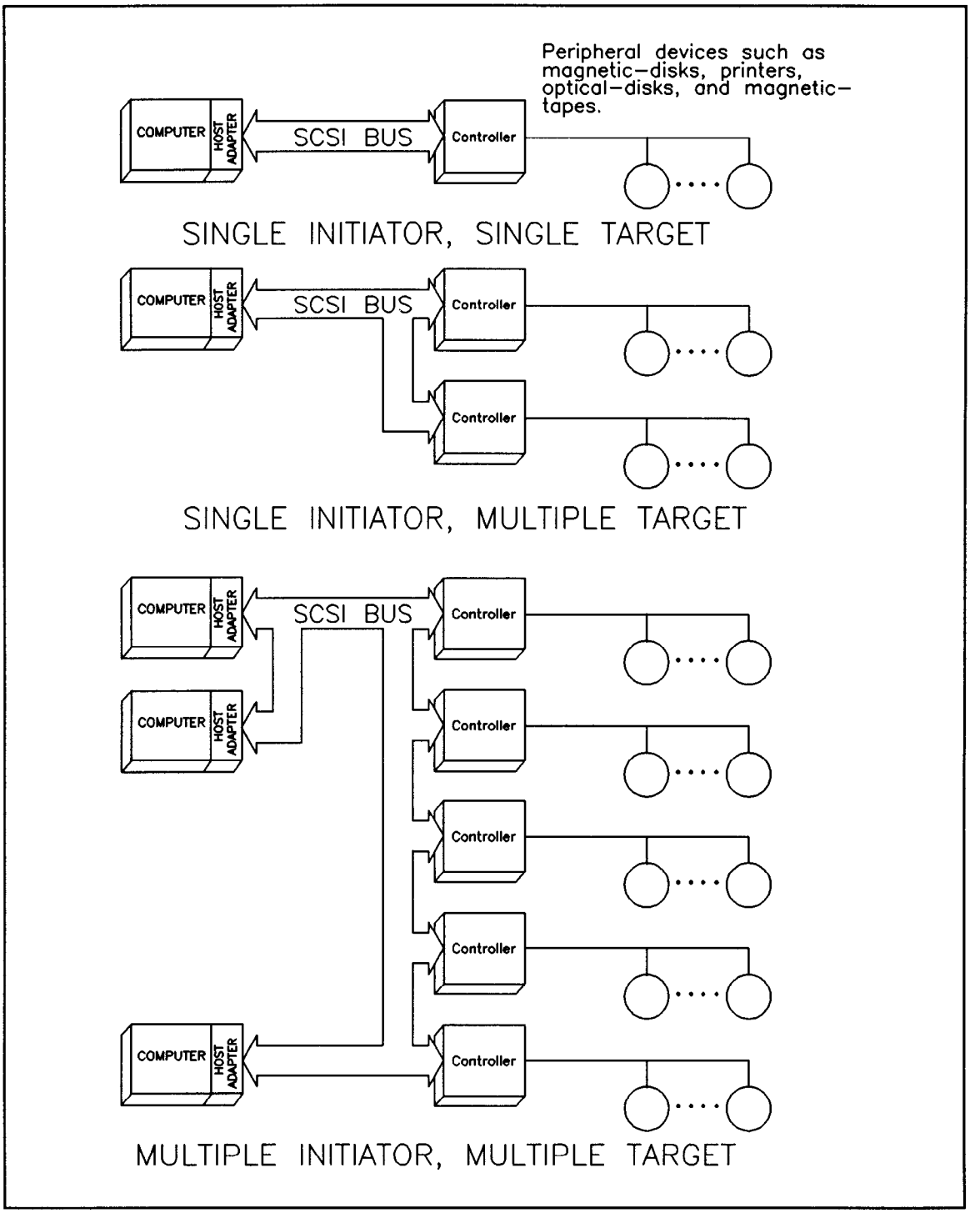

Figure 14 - Sample SCSI configurations

Copyright International Organization for Standardization
Provided by IHS under license with ISO
No reproduction or networking permitted without license from IHS
Not for Resale

5.6 SCSI bus signals

There are a total of 18 signals on the A cable and 29 signals on the B cable. A total of 11 signals are used for control and 36 are used for data (messages, commands, status and data), including parity. These signals are described as follows:

a) **BSY (BUSY).** An OR-tied signal that indicates that the bus is being used.

b) **SEL (SELECT).** An OR-tied signal used by an initiator to select a target or by a target to reselect an initiator.

NOTE 14 The SEL signal was not defined as OR-tied in SCSI-1. It has been defined as OR-tied in SCSI-2 in anticipation of needing another OR-tied signal for future standardization. This does not cause an operational problem in mixing SCSI-1 and SCSI-2 devices.

c) **C/D (CONTROL/DATA).** A signal driven by a target that indicates whether CONTROL or DATA information is on the DATA BUS. True indicates CONTROL.

d) **I/O (INPUT/OUTPUT).** A signal driven by a target that controls the direction of data movement on the DATA BUS with respect to an initiator. True indicates input to the initiator. This signal is also used to distinguish between SELECTION and RESELECTION phases.

e) **MSG (MESSAGE).** A signal driven by a target during the MESSAGE phase.

f) **REQ (REQUEST).** A signal driven by a target on the A cable to indicate a request for an ACK information transfer handshake.

g) **REQB (REQUEST).** A signal driven by a target on the B cable to indicate a request for an ACKB information transfer handshake.

h) **ACK (ACKNOWLEDGE).** A signal driven by an initiator on the A cable to indicate an acknowledgment for a REQ information transfer handshake.

i) **ACKB (ACKNOWLEDGE).** A signal driven by an initiator on the B cable to indicate an acknowledgment for a REQB information transfer handshake.

j) **ATN (ATTENTION).** A signal driven by an initiator to indicate the ATTENTION condition.

k) **RST (RESET).** An OR-tied signal that indicates the RESET condition.

l) **DB(7-0,P) (DATA BUS).** Eight data-bit signals, plus a parity-bit signal that form a DATA BUS. DB(7) is the most significant bit and has the highest priority during the ARBITRATION phase. Bit number, significance, and priority decrease downward to DB(0). A data bit is defined as one when the signal value is true and is defined as zero when the signal value is false. Data parity DB(P) shall be odd. Parity is undefined during the ARBITRATION phase.

m) **DB(31-8,P1,P2,P3) (DATA BUS).** Twenty-four data-bit signals, plus three parity-bit signals that form an extension to the DATA BUS. DB(P1,P2,P3) are parity bits for DB(15-8), DB(23-16), and DB(31-24) respectively. A data bit is defined as one when the signal value is true and is defined as zero when the signal value is false. Data parity DB(Px) shall be odd.

Copyright International Organization for Standardization
Provided by IHS under license with ISO
No reproduction or networking permitted without license from IHS Not for Resale

5.6.1 Signal values

Signals may assume true or false values. There are two methods of driving these signals. In both cases, the signal shall be actively driven true, or asserted. In the case of OR-tied drivers, the driver does not drive the signal to the false state, rather the bias circuitry of the bus terminators pulls the signal false whenever it is released by the drivers at every SCSI device. If any driver is asserted, then the signal is true. In the case of non-OR-tied drivers, the signal may be actively driven false. In this International Standard, wherever the term negated is used, it means that the signal may be actively driven false, or may be simply released (in which case the bias circuitry pulls it false), at the option of the implementor. The advantage to actively driving signals false during information transfer is that the transition from true to false occurs more quickly and the noise margin is much higher than if the signal is simply released. This facilitates reliable data transfer at high rates, especially at the longer cable lengths used with differential drivers.

5.6.2 OR-tied signals

The BSY, SEL, and RST signals shall be OR-tied only. In the ordinary operation of the bus, the BSY and RST signals may be simultaneously driven true by several drivers. No signals other than BSY, RST, and DB(P) are simultaneously driven by two or more drivers, and any signal other than BSY, SEL, and RST may employ OR-tied or non-OR-tied drivers. DB(P) shall not be driven false during the ARBITRATION phase but may be driven false in other phases. There is no operational problem in mixing OR-tied and non-OR-tied drivers on signals other than BSY and RST.

5.6.3 Signal sources

Table 6 indicates which type of SCSI device is allowed to source each signal. No attempt is made to show if the source is driving asserted, driving negated, or is passive. All SCSI device drivers that are not active sources be in the passive state. The RST signal may be asserted by any SCSI device at any time.

Copyright International Organization for Standardization
Provided by IHS under license with ISO
No reproduction or networking permitted without license from IHS Not for Resale

Table 6 - Signal sources

Bus phase	A cable signals					B cable signals		
	BSY	SEL	C/D, I/O, MSG, REQ	ACK, ATN	DB(7-0) DB(P)	REQB	ACKB	DB(31-8) DB(P1) DB(P2) DB(P3)
BUS FREE	None	None	None	None	None	None	None	None
ARBITRATION	All	Win	None	None	S ID	None	None	None
SELECTION	I&T	Init	None	Init	Init	None	None	None
RESELECTION	I&T	Targ	Targ	Init	Targ	None	None	None
COMMAND	Targ	None	Targ	Init	Init	None	None	None
DATA IN	Targ	None	Targ	Init	Targ	Targ	Init	Targ
DATA OUT	Targ	None	Targ	Init	Init	Targ	Init	Init
STATUS	Targ	None	Targ	Init	Targ	None	None	None
MESSAGE IN	Targ	None	Targ	Init	Targ	None	None	None
MESSAGE OUT	Targ	None	Targ	Init	Init	None	None	None

All: The signal shall be driven by all SCSI devices that are actively arbitrating.

S ID: A unique data bit (the SCSI ID) shall be driven by each SCSI device that is actively arbitrating; the other seven data bits shall be released (i.e., not driven) by this SCSI device. The parity bit (DB(P)) may be released or driven to the true state, but shall never be driven to the false state during this phase.

I&T: The signal shall be driven by the initiator, target, or both, as specified in the SELECTION phase and RESELECTION phase.

Init: If driven, this signal shall be driven only by the active initiator.

None: The signal shall be released; that is, not be driven by any SCSI device. The bias circuitry of the bus terminators pulls the signal to the false state.

Win: The signal shall be driven by the one SCSI device that wins arbitration.

Targ: If the signal is driven, it shall be driven only by the active target.

5.7 SCSI bus timing

Unless otherwise indicated, the delay-time measurements for each SCSI device, shown in table 7, shall be calculated from signal conditions existing at that SCSI device's own SCSI bus connection. Thus, these measurements (except cable skew delay) can be made without considering delays in the cable. The timing characteristics of each signal are described in the following paragraphs.

Copyright International Organization for Standardization
Provided by IHS under license with ISO
No reproduction or networking permitted without license from IHS Not for Resale

Table 7 - SCSI bus timing values

Timing description	Timing value
Arbitration delay	2,4 μs
Assertion period	90 ns
Bus clear delay	800 ns
Bus free delay	800 ns
Bus set delay	1,8 μs
Bus settle delay	400 ns
Cable skew delay	10 ns
Data release delay	400 ns
Deskew delay	45 ns
Disconnection delay	200 μs
Hold time	45 ns
Negation period	90 ns
Power-on to selection time	10 s recommended
Reset to selection time	250 ms recommended
Reset hold time	25 μs
Selection abort time	200 μs
Selection time-out delay	250 ms recommended
Transfer period	set during an SDTR message
Fast assertion period	30 ns
Fast cable skew delay	5 ns
Fast deskew delay	20 ns
Fast hold time	10 ns
Fast negation period	30 ns

5.7.1 Arbitration delay

The minimum time an SCSI device shall wait from asserting BSY for arbitration until the DATA BUS can be examined to see if arbitration has been won. There is no maximum time.

5.7.2 Assertion period

The minimum time that a target shall assert REQ (or REQB) while using synchronous data transfers. Also, the minimum time that an initiator shall assert ACK (or ACKB) while using synchronous data transfers. REQB and ACKB timings only apply to optional wide data transfers.

5.7.3 Bus clear delay

The maximum time for an SCSI device to stop driving all bus signals after:

a) The BUS FREE phase is detected (see 6.1.1)
b) SEL is received from another SCSI device during the ARBITRATION phase
c) The transition of RST to true.

For the first condition above, the maximum time for an SCSI device to clear the bus is 1200 nanoseconds from BSY and SEL first becoming both false. If an SCSI device requires more than a bus settle delay to detect BUS FREE phase, it shall clear the bus within a bus clear delay minus the excess time.

5.7.4 Bus free delay

The minimum time that an SCSI device shall wait from its detection of the BUS FREE phase (see 6.1.1) until its assertion of BSY when going to the ARBITRATION phase.

Copyright International Organization for Standardization
Provided by IHS under license with ISO
No reproduction or networking permitted without license from IHS Not for Resale

5.7.5 Bus set delay

The maximum time for an SCSI device to assert BSY and its SCSI ID bit on the DATA BUS after it detects BUS FREE phase (see 6.1.1) for the purpose of entering the ARBITRATION phase.

5.7.6 Bus settle delay

The minimum time to wait for the bus to settle after changing certain control signals as called out in the protocol definitions.

5.7.7 Cable skew delay

The maximum difference in propagation time allowed between any two SCSI bus signals measured between any two SCSI devices.

5.7.8 Data release delay

The maximum time for an initiator to release the DATA BUS signals following the transition of the I/O signal from false to true.

5.7.9 Deskew delay

The minimum time required for deskew of certain signals.

5.7.10 Disconnection delay

The minimum time that a target shall wait after releasing BSY before participating in an ARBITRATION phase when honouring a DISCONNECT message from the initiator.

5.7.11 Hold time

The minimum time added between the assertion of REQ (or REQB) or ACK (or ACKB) and the changing of the data lines to provide hold time in the initiator or target while using synchronous data transfers. REQB and ACKB timings only apply to optional wide data transfers.

5.7.12 Negation period

The minimum time that a target shall negate REQ (or REQB) while using synchronous data transfers. Also, the minimum time that an initiator shall negate ACK (or ACKB) while using synchronous data transfers. REQB and ACKB timings only apply to optional wide data transfers.

5.7.13 Power-on to selection time

The recommended maximum time from power application until an SCSI target is able to respond with appropriate status and sense data to the TEST UNIT READY, INQUIRY, and REQUEST SENSE commands.

5.7.14 Reset to selection time

The recommended maximum time after a hard RESET condition until an SCSI target is able to respond with appropriate status and sense data to the TEST UNIT READY, INQUIRY, and REQUEST SENSE commands.

Copyright International Organization for Standardization
Provided by IHS under license with ISO
No reproduction or networking permitted without license from IHS Not for Resale

5.7.15 Reset hold time

The minimum time for which RST is asserted. There is no maximum time.

5.7.16 Selection abort time

The maximum time that a target (or initiator) shall take from its most recent detection of being selected (or reselected) until asserting a BSY response. This time-out is required to ensure that a target (or initiator) does not assert BSY after a SELECTION (or RESELECTION) phase has been aborted. This is not the selection time-out period; see 6.1.3.1 and 6.1.4.2 for a complete description.

5.7.17 Selection time-out delay

The minimum time that an SCSI device should wait for a BSY response during the SELECTION or RESELECTION phase before starting the time-out procedure.

Note 15 The selection time-out delay is only a recommended time period.

5.7.18 Transfer period

The minimum time allowed between the leading edges of successive REQ pulses or of successive ACK pulses while using synchronous data transfers. (See 6.1.5.2 and 6.6.21.)

5.8 Fast synchronous transfer option

When devices negotiate a synchronous data transfer period of less than 200 ns they are said to be using fast synchronous data transfers. Devices that negotiate a synchronous data transfer period greater than or equal to 200 ns use timing parameters specified in 5.7. When a fast synchronous data transfer period is negotiated, those specific times redefined in this section are used; those not redefined remain the same. The minimum synchronous data transfer period is 100 ns.

5.8.1 Fast assertion period

The minimum time that a target shall assert REQ (or REQB) while using fast synchronous data transfers. It is also the minimum time that an initiator shall assert ACK (or ACKB) while using fast synchronous data transfers. REQB and ACKB timings only apply to optional wide data transfers.

5.8.2 Fast cable skew delay

The maximum difference in propagation time allowed between any two SCSI bus signals measured between any two SCSI devices while using fast synchronous data transfers.

5.8.3 Fast deskew delay

The minimum time required for deskew of certain signals while using fast synchronous data transfers.

5.8.4 Fast hold time

The minimum time added between the assertion of REQ (or REQB) or ACK (or ACKB) and the changing of the data lines to provide hold time in the initiator or target while using fast synchronous data transfers. REQB and ACKB timings only apply to optional wide data transfers.

Copyright International Organization for Standardization
Provided by IHS under license with ISO
No reproduction or networking permitted without license from IHS Not for Resale

5.8.5 Fast negation period

The minimum time that a target shall negate REQ (or REQB) while using fast synchronous data transfers. Also, the minimum time that an initiator shall negate ACK (or ACKB) while using fast synchronous data transfers. REQB and ACKB timings only apply to optional wide data transfers.

Copyright International Organization for Standardization
Provided by IHS under license with ISO
No reproduction or networking permitted without license from IHS Not for Resale

6 Logical characteristics

6.1 SCSI bus phases

The SCSI architecture includes eight distinct phases:

a) BUS FREE phase
b) ARBITRATION phase
c) SELECTION phase
d) RESELECTION phase
e) COMMAND phase ┐
f) DATA phase ‖ These phases are collectively termed
g) STATUS phase ‖ the information transfer phases.
h) MESSAGE phase ┘

The SCSI bus can never be in more than one phase at any given time. In the following descriptions, signals that are not mentioned shall not be asserted.

6.1.1 BUS FREE phase

The BUS FREE phase indicates that there is no current I/O process and that the SCSI bus is available for a connection.

SCSI devices shall detect the BUS FREE phase after the SEL and BSY signals are both false for at least a bus settle delay.

SCSI devices shall release all SCSI bus signals within a bus clear delay after the BSY and SEL signals become continuously false for a bus settle delay. If an SCSI device requires more than a bus settle delay to detect the BUS FREE phase then it shall release all SCSI bus signals within a bus clear delay minus the excess time to detect the BUS FREE phase. The total time to clear the SCSI bus shall not exceed a bus settle delay plus a bus clear delay.

During normal operation the BUS FREE phase is entered when a target releases the BSY signal. However, the BUS FREE phase may be entered following the release of the SEL signal after a SELECTION or RESELECTION phase time-out.

Initiators normally do not expect BUS FREE phase to begin because of the target's release of the BSY signal except after one of the following occurrences:

a) after a reset condition is detected;
b) after an ABORT message is successfully received by a target;
c) after a BUS DEVICE RESET message is successfully received by a target;
d) after a DISCONNECT message is successfully transmitted from a target (see 6.6.6);
e) after a COMMAND COMPLETE message is successfully transmitted from a target (see 6.6.5);
f) after a RELEASE RECOVERY message is successfully received by a target;
g) after an ABORT TAG message is successfully received by a target;
h) after a CLEAR QUEUE message is successfully received by a target.

If an initiator detects the release of the BSY signal by the target at any other time, the target is indicating an error condition to the initiator. The target may perform this transition to the BUS FREE phase independent of the state of the ATN signal. The initiator shall manage this condition as an unsuccessful I/O process termination. The target terminates the I/O process by clearing all pending data and status information for the affected nexus. The target may optionally prepare sense data that may be retrieved by a REQUEST SENSE command.

Copyright International Organization for Standardization
Provided by IHS under license with ISO
No reproduction or networking permitted without license from IHS Not for Resale

6.1.2 ARBITRATION phase

The ARBITRATION phase allows one SCSI device to gain control of the SCSI bus so that it can initiate or resume an I/O process.

The procedure for an SCSI device to obtain control of the SCSI bus is as follows:

a) The SCSI device shall first wait for the BUS FREE phase to occur. The BUS FREE phase is detected whenever both the BSY and SEL signals are simultaneously and continuously false for a minimum of a bus settle delay.

NOTE 16 This bus settle delay is necessary because a transmission line phenomenon known as a wired-OR glitch may cause the BSY signal to briefly appear false, even though it is being driven true.

b) The SCSI device shall wait a minimum of a bus free delay after detection of the BUS FREE phase (i.e. after the BSY and SEL signals are both false for a bus settle delay) before driving any signal.

c) Following the bus free delay in step (b), the SCSI device may arbitrate for the SCSI bus by asserting both the BSY signal and its own SCSI ID, however the SCSI device shall not arbitrate (i.e. assert the BSY signal and its SCSI ID) if more than a bus set delay has passed since the BUS FREE phase was last observed.

NOTE 17 There is no maximum delay before asserting the BSY signal and the SCSI ID following the bus free delay in step (b) as long as the bus remains in the BUS FREE phase. However, SCSI devices that delay longer than a bus settle delay plus a bus set delay from the time when the BSY and SEL signals first become false may fail to participate in arbitration when competing with faster SCSI devices.

d) After waiting at least an arbitration delay (measured from its assertion of the BSY signal) the SCSI device shall examine the DATA BUS. If a higher priority SCSI ID bit is true on the DATA BUS (DB(7) is the highest), then the SCSI device has lost the arbitration and the SCSI device may release its signals and return to step (a). If no higher priority SCSI ID bit is true on the DATA BUS, then the SCSI device has won the arbitration and it shall assert the SEL signal. Any SCSI device other than the winner has lost the arbitration and shall release the BSY signal and its SCSI ID bit within a bus clear delay after the SEL signal becomes true. An SCSI device that loses arbitration may return to step (a).

NOTES
18 Step d) above requires that any device complete the arbitration phase to the point of SEL being asserted if it begins the arbitration phase as stated in step c). This precludes the possibility of the bus being hung.
19 It is recommended that new implementations wait for the SEL signal to become true before releasing the BSY signal and SCSI ID bit when arbitration is lost.

e) The SCSI device that wins arbitration shall wait at least a bus clear delay plus a bus settle delay after asserting the SEL signal before changing any signals.

NOTE 20 The SCSI ID bit is a single bit on the DATA BUS that corresponds to the SCSI device's unique SCSI address. All other DATA BUS bits shall be released by the SCSI device. Parity is not valid during the ARBITRATION phase. During the ARBITRATION phase, DB(P) may be released or asserted, but shall not be actively driven false.

6.1.3 SELECTION phase

The SELECTION phase allows an initiator to select a target for the purpose of initiating some target function (e.g., READ or WRITE command). During the SELECTION phase the I/O signal is negated so that this phase can be distinguished from the RESELECTION phase.

The SCSI device that won the arbitration has both the BSY and SEL signals asserted and has delayed at least a bus clear delay plus a bus settle delay before ending the ARBITRATION phase. The SCSI device that won the arbitration becomes an initiator by not asserting the I/O signal.

The initiator shall set the DATA BUS to a value that is the OR of its SCSI ID bit and the target's SCSI ID bit and it shall assert the ATN signal (indicating that a MESSAGE OUT phase is to follow the SELECTION phase). The initiator shall

Copyright International Organization for Standardization
Provided by IHS under license with ISO
No reproduction or networking permitted without license from IHS Not for Resale

then wait at least two deskew delays and release the BSY signal. The initiator shall then wait at least a bus settle delay before looking for a response from the target.

The target shall determine that it is selected when the SEL signal and its SCSI ID bit are true and the BSY and I/O signals are false for at least a bus settle delay. The selected target may examine the DATA BUS in order to determine the SCSI ID of the selecting initiator. The selected target shall then assert the BSY signal within a selection abort time of its most recent detection of being selected; this is required for correct operation of the selection time-out procedure.

The target shall not respond to a selection if bad parity is detected. Also, if more than two SCSI ID bits are on the DATA BUS, the target shall not respond to selection.

NOTE 21 Although an SCSI-2 initiator may not use the single initiator option or the selection without asserting ATN option of SCSI-1, an SCSI-2 target may elect to support these options for compatibility with SCSI-1 initiators. When doing so the SCSI-2 target responds as described in the SCSI-1 standard.

No less than two deskew delays after the initiator detects the BSY signal is true, it shall release the SEL signal and may change the DATA BUS. The target shall wait until the SEL signal is false before asserting the REQ signal to enter an information transfer phase.

6.1.3.1 SELECTION time-out procedure

Two optional selection time-out procedures are specified for clearing the SCSI bus if the initiator waits a minimum of a selection time-out delay and there has been no BSY signal response from the target:

a) Optionally, the initiator shall assert the RST signal (see 6.2.2);
b) Optionally, the initiator shall continue asserting the SEL and ATN signals and shall release the DATA BUS. If the initiator has not detected the BSY signal to be true after at least a selection abort time plus two deskew delays, the initiator shall release the SEL and ATN signals allowing the SCSI bus to go to the BUS FREE phase. SCSI devices shall ensure that when responding to selection that the selection was still valid within a selection abort time of their assertion of the BSY signal. Failure to comply with this requirement could result in an improper selection (two targets connected to the same initiator, wrong target connected to an initiator, or a target connected to no initiator).

6.1.4 RESELECTION phase

RESELECTION is an optional phase that allows a target to reconnect to an initiator for the purpose of continuing some operation that was previously started by the initiator but was suspended by the target, (i.e. the target disconnected by allowing a BUS FREE phase to occur before the operation was complete).

6.1.4.1 RESELECTION

Upon completing the ARBITRATION phase, the winning SCSI device has both the BSY and SEL signals asserted and has delayed at least a bus clear delay plus a bus settle delay. The winning SCSI device becomes a target by asserting the I/O signal. The winning SCSI device shall also set the DATA BUS to a value that is the logical OR of its SCSI ID bit and the initiator's SCSI ID bit. The target shall wait at least two deskew delays and release the BSY signal. The target shall then wait at least a bus settle delay before looking for a response from the initiator.

The initiator shall determine that it is reselected when the SEL and I/O signals and its SCSI ID bit are true and the BSY signal is false for at least a bus settle delay. The reselected initiator may examine the DATA BUS in order to determine the SCSI ID of the reselecting target. The reselected initiator shall then assert the BSY signal within a selection abort time of its most recent detection of being reselected; this is required for correct operation of the time-out procedure. The initiator shall not respond to a RESELECTION phase if bad parity is detected. Also, the initiator shall not respond to a RESELECTION phase if other than two SCSI ID bits are on the DATA BUS.

After the target detects the BSY signal is true, it shall also assert the BSY signal and wait at least two deskew delays and then release the SEL signal. The target may then change the I/O signal and the DATA BUS. After the reselected

Copyright International Organization for Standardization
Provided by IHS under license with ISO
No reproduction or networking permitted without license from IHS Not for Resale

initiator detects the SEL signal is false, it shall release the BSY signal. The target shall continue asserting the BSY signal until it relinquishes the SCSI bus.

NOTE 22 When the target is asserting the BSY signal, a transmission line phenomenon known as a wired-OR glitch may cause the BSY signal to appear false for up to a round-trip propagation delay following the release of the BSY signal by the initiator. This is the reason why the BUS FREE phase is recognized only after both the BSY and SEL signals are continuously false for a minimum of a bus settle delay. Cables longer than 25 m should not be used even if the chosen driver, receiver, and cable provide adequate noise margins, because they increase the duration of the glitch and could cause SCSI devices to inadvertently detect the BUS FREE phase.

6.1.4.2 RESELECTION time-out procedure

Two optional RESELECTION time-out procedures are specified for clearing the SCSI bus during a RESELECTION phase if the target waits a minimum of a selection time-out delay and there has been no BSY signal response from the initiator:

a) Optionally, the target shall assert the RST signal (see 6.2.2);
b) Optionally, the target shall continue asserting the SEL and I/O signals and shall release all DATA BUS signals. If the target has not detected the BSY signal to be true after at least a selection abort time plus two deskew delays, the target shall release the SEL and I/O signals allowing the SCSI bus to go to the BUS FREE phase. SCSI devices that respond to the RESELECTION phase shall ensure that the reselection was still valid within a selection abort time of their assertion of the BSY signal. Failure to comply with this requirement could result in an improper reselection (two initiators connected to the same target or the wrong initiator connected to a target).

6.1.5 Information transfer phases

NOTE 23 The COMMAND, DATA, STATUS, and MESSAGE phases are all grouped together as the information transfer phases because they are all used to transfer data or control information via the DATA BUS. The actual content of the information is beyond the scope of this section.

The C/D, I/O, and MSG signals are used to distinguish between the different information transfer phases (see table 8). The target drives these three signals and therefore controls all changes from one phase to another. The initiator can request a MESSAGE OUT phase by asserting the ATN signal, while the target can cause the BUS FREE phase by releasing the MSG, C/D, I/O, and BSY signals.

The information transfer phases use one or more REQ/ACK handshakes to control the information transfer. Each REQ/ACK handshake allows the transfer of one byte of information. During the information transfer phases the BSY signal shall remain true and the SEL signal shall remain false. Additionally, during the information transfer phases, the target shall continuously envelope the REQ/ACK handshake(s) with the C/D, I/O, and MSG signals in such a manner that these control signals are valid for a bus settle delay before the assertion of the REQ signal of the first handshake and remain valid until after the negation of the ACK signal at the end of the handshake of the last transfer of the phase.

NOTES
24 After the negation of the ACK signal of the last transfer of the phase, the target may prepare for a new phase by asserting or negating the C/D, I/O, and MSG signals. These signals may be changed together or individually. They may be changed in any order and may be changed more than once. It is desirable that each line change only once. A new phase does not begin until the REQ signal is asserted for the first byte of the new phase.
25 A phase is defined as ending when the C/D, I/O, or MSG signals change after the negation of the ACK signal. The time between the end of a phase and the assertion of the REQ signal beginning a new phase is undefined. An initiator is allowed to anticipate a new phase based on the previous phase, the expected new phase, and early information provided by changes in the C/D, I/O, and MSG signals. However, the anticipated phase is not valid until the REQ signal is asserted at the beginning of the next phase.

Copyright International Organization for Standardization
Provided by IHS under license with ISO
No reproduction or networking permitted without license from IHS Not for Resale

Table 8 - Information transfer phases

Signal			Phase name	Direction of transfer	Comment
MSG	C/D	I/O			
0	0	0	DATA OUT	Initiator to target \	Data
0	0	1	DATA IN	Initiator from target /	phase
0	1	0	COMMAND	Initiator to target	
0	1	1	STATUS	Initiator from target	
1	0	0	*		
1	0	1	*		
1	1	0	MESSAGE OUT	Initiator to target \	Message
1	1	1	MESSAGE IN	Initiator from target /	phase
Key: 0 = False, 1 = True, * = Reserved for future standardization					

6.1.5.1 Asynchronous information transfer

The target shall control the direction of information transfer by means of the I/O signal. When the I/O signal is true, information shall be transferred from the target to the initiator. When the I/O signal is false, information shall be transferred from the initiator to the target.

If the I/O signal is true (transfer to the initiator), the target shall first drive the DB(7-0,P) signals to their desired values, delay at least one deskew delay plus a cable skew delay, then assert the REQ signal. The DB(7-0,P) signals shall remain valid until the ACK signal is true at the target. The initiator shall read the DB(7-0,P) signals after the REQ signal is true, then indicate its acceptance of the data by asserting the ACK signal. When the ACK signal becomes true at the target, the target may change or release the DB(7-0,P) signals and shall negate the REQ signal. After the REQ signal is false the initiator shall then negate the ACK signal. After the ACK signal is false the target may continue the transfer by driving the DB(7-0,P) signals and asserting the REQ signal, as described above.

If the I/O signal is false (transfer to the target) the target shall request information by asserting the REQ signal. The initiator shall drive the DB(7-0,P) signals to their desired values, delay at least one deskew delay plus a cable skew delay and assert the ACK signal. The initiator shall continue to drive the DB(7-0,P) signals until the REQ signal is false. When the ACK signal becomes true at the target, the target shall read the DB(7-0,P) signals then negate the REQ signal. When the REQ signal becomes false at the initiator, the initiator may change or release the DB(7-0,P) signals and shall negate the ACK signal. After the ACK signal is false the target may continue the transfer by asserting the REQ signal, as described above.

6.1.5.2 Synchronous data transfer

Synchronous data transfer is optional and is only used in data phases. It shall be used in a data phase if a synchronous data transfer agreement has been established (see 6.6.21). The agreement specifies the REQ/ACK offset and the minimum transfer period.

The REQ/ACK offset specifies the maximum number of REQ pulses that can be sent by the target in advance of the number of ACK pulses received from the initiator, establishing a pacing mechanism. If the number of REQ pulses exceeds the number of ACK pulses by the REQ/ACK offset, the target shall not assert the REQ signal until after the leading edge of the next ACK pulse is received. For successful completion of the data phase the number of ACK and REQ pulses shall be equal.

The target shall assert the REQ signal for a minimum of an assertion period. The target shall then wait at least the greater of a transfer period from the last transition of the REQ signal to true or a minimum of a negation period from the last transition of the REQ signal to false before again asserting the REQ signal.

The initiator shall send one pulse on the ACK signal for each REQ pulse received. The ACK signal may be asserted as soon as the leading edge of the corresponding REQ pulse has been received. The initiator shall assert the ACK signal for a minimum of an assertion period. The initiator shall wait at least the greater of a transfer period from the

Copyright International Organization for Standardization
Provided by IHS under license with ISO
No reproduction or networking permitted without license from IHS Not for Resale

last transition of the ACK signal to true or for a minimum of a negation period from the last transition of the ACK signal to false before asserting the ACK signal.

If the I/O signal is true (transfer to the initiator), the target shall first drive the DB(7-0,P) signals to their desired values, wait at least one deskew delay plus one cable skew delay, then assert the REQ signals. The DB(7-0,P) signals shall be held valid for a minimum of one deskew delay plus one cable skew delay plus one hold time after the assertion of the REQ signal. The target shall assert the REQ signal for a minimum of an assertion period. The target may then negate the REQ signal and change or release the DB(7-0,P) signals. The initiator shall read the value on the DB(7-0,P) signals within one hold time of the transition of the REQ signal to true. The initiator shall then respond with an ACK pulse.

If the I/O signal is false (transfer to the target), the initiator shall transfer one byte for each REQ pulse received. After receiving the leading edge of a REQ pulse, the initiator shall first drive the DB(7-0,P) signals to their desired values, delay at least one deskew delay plus one cable skew delay, then assert the ACK signal. The initiator shall hold the DB(7-0,P) signals valid for at least one deskew delay plus one cable skew delay plus one hold time after the assertion of the ACK signal. The initiator shall assert the ACK signal for a minimum of an assertion period. The initiator may then negate the ACK signal and may change or release the DB(7-0,P) signals. The target shall read the value of the DB(7-0,P) signals within one hold time of the transition of the ACK signal to true.

NOTE 26 The description in SCSI-1 allowed some implementors to presume that the leading edge of the first REQ pulse beyond the REQ/ACK offset agreement would not occur until after the trailing edge of the last ACK pulse within the agreement. Devices implemented with this understanding may be subject to data destruction when in synchronous data transfer mode with devices that issue the leading edge of the next REQ pulse, at the boundary of the agreement, as soon as the leading edge of the last ACK pulse within the agreement is received. Implementors using devices of the former type in initiator designs may ensure data integrity by restricting the synchronous offset agreement to values smaller than the maximum nominally offered by their device.

6.1.5.3 Wide data transfer

Wide data transfer is optional and may be used in the DATA phase only if a non-zero wide data transfer agreement is in effect (see WIDE DATA TRANSFER REQUEST message, 6.6.23). The messages determine the use of wide mode by both SCSI devices and establish a data path width to be used during the DATA phase.

Wide data transfers of 16- or 32-bits may be established. Targets and initiators that support 32-bit wide transfers should also support 16-bit wide transfers. All SCSI devices shall support 8-bit data transfers.

During 16-bit wide data transfers, the first logical data byte for each data phase shall be transferred across the DB(7-0,P) signals on the A cable and the second logical data byte shall be transferred across the DB(15-8,P1) signals on the B cable. Subsequent pairs of data bytes are likewise transferred in parallel across the A and B cables (see figure 15).

NOTE 27 An alternate 16-bit single-cable solution and an alternate 32-bit solution is being defined and the B cable definition will be removed in a future version of SCSI.

During 32-bit wide data transfers, the first logical data byte for each data phase shall be transferred across the DB(7-0,P) signals on the A cable and the second, third, and fourth logical data bytes shall be transferred across the DB(15-8,P1), DB(23-16,P2), and DB(31-24,P3) signals, respectively, on the B cable. Subsequent groups of four data bytes are likewise transferred in parallel across the A and B cables (see figure 15).

Copyright International Organization for Standardization
Provided by IHS under license with ISO
No reproduction or networking permitted without license from IHS Not for Resale

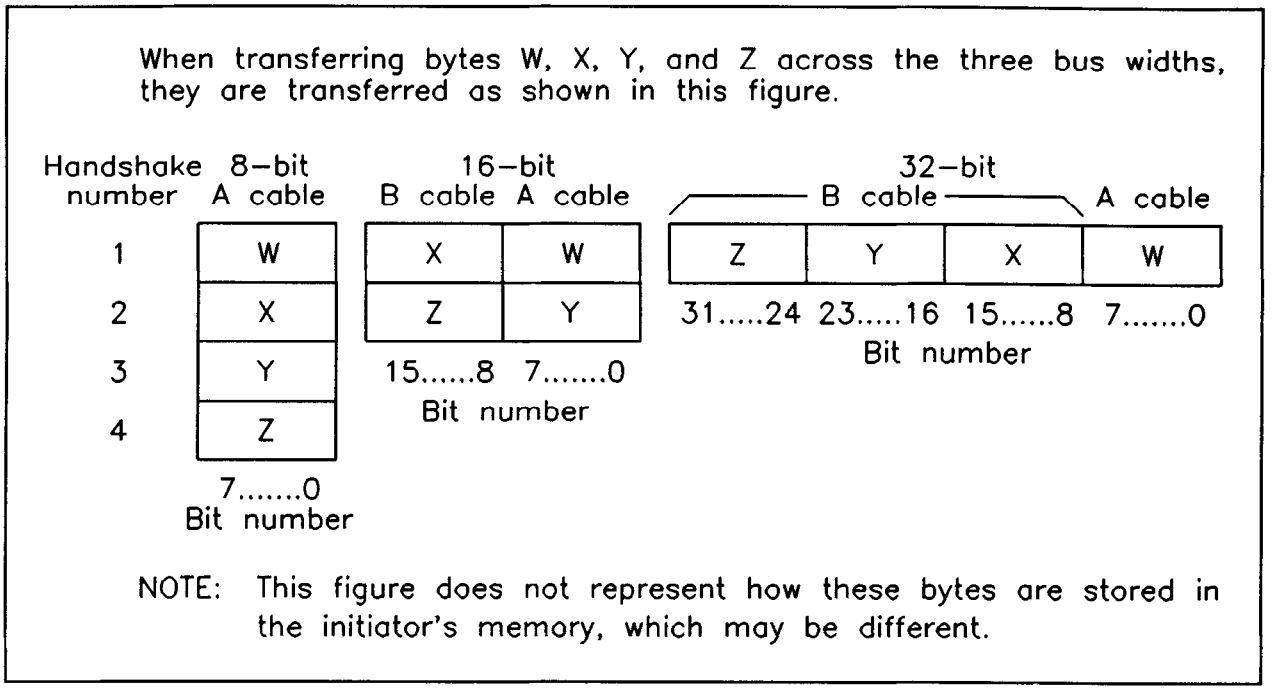

Figure 15 - Wide SCSI byte ordering

If the last data byte transferred does not fall on the DB(15-8,P1) signals for a 16-bit wide transfer or the DB(31-24,P3) signals for a 32-bit wide transfer, then the values of the remaining higher-numbered bits are undefined. However, parity bits for these undefined bytes shall be valid for whatever data is placed on the bus.

To ensure proper data integrity, certain sequence requirements shall be met between the REQ/ACK handshakes on the A cable and the REQB/ACKB handshakes on the B cable:

a) The REQB and ACKB signals shall only be asserted during data phases while a nonzero wide data transfer agreement is in effect. These signals shall not be asserted during other phases.
b) The same information transfer mode (asynchronous or synchronous) shall be used for both the A cable and the B cable. If synchronous data transfer mode is in effect, the same REQ/ACK offset and transfer period shall be used for both cables.
c) The information transfer procedures defined in 6.1.5.1 and 6.1.5.2 for the A cable (the REQ, ACK, and DB(7-0,P) signals) shall also apply to the B cable (the REQB, ACKB, and DB(31-8,P1,P2,P3) signals). The only means available for a target to manage the timing relationship between the signals on the two cables is its management of the REQ and REQB signals. Similarly, the only means for the initiator to manage the timing between the two cables is its management of the ACK and ACKB signals.
d) The target shall ensure that the number of REQ/ACK handshakes and the number of REQB/ACKB handshakes in a data phase are equal before it changes to another phase. The target shall not change the phase until the ACK and ACKB signals have both become false for the last REQ/ACK handshake and the last REQB/ACKB handshake.

NOTE 28 If any violations of these rules are detected by the target, the target may attempt to end the data phase and return CHECK CONDITION status. If it is impossible to correctly terminate the data phase, the target may abnormally terminate the I/O process by an unexpected disconnect. If any violations of these rules are detected by the initiator, the initiator may attempt to send an INITIATOR DETECTED ERROR message to the target. If the initiator is unable to terminate the I/O process normally, it may generate the reset condition.

Copyright International Organization for Standardization
Provided by IHS under license with ISO
No reproduction or networking permitted without license from IHS Not for Resale

6.1.6 COMMAND phase

The COMMAND phase allows the target to request command information from the initiator.

The target shall assert the C/D signal and negate the I/O and MSG signals during the REQ/ACK handshake(s) of this phase.

6.1.7 Data phase

The data phase is a term that encompasses both the DATA IN phase and the DATA OUT phase.

6.1.7.1 DATA IN phase

The DATA IN phase allows the target to request that data be sent to the initiator from the target.

The target shall assert the I/O signal and negate the C/D and MSG signals during the REQ/ACK handshake(s) of this phase.

6.1.7.2 DATA OUT phase

The DATA OUT phase allows the target to request that data be sent from the initiator to the target.

The target shall negate the C/D, I/O, and MSG signals during the REQ/ACK handshake(s) of this phase.

6.1.8 STATUS phase

The STATUS phase allows the target to request that status information be sent from the target to the initiator.

The target shall assert the C/D and I/O signals and negate the MSG signal during the REQ/ACK handshake of this phase.

6.1.9 Message phase

The message phase is a term that references either a MESSAGE IN, or a MESSAGE OUT phase. Multiple messages may be sent during either phase. The first byte transferred in either of these phases shall be either a single-byte message or the first byte of a multiple-byte message. Multiple-byte messages shall be wholly contained within a single message phase.

6.1.9.1 MESSAGE IN phase

The MESSAGE IN phase allows the target to request that message(s) be sent to the initiator from the target.

The target shall assert the C/D, I/O, and MSG signals during the REQ/ACK handshake(s) of this phase.

6.1.9.2 MESSAGE OUT phase

The MESSAGE OUT phase allows the target to request that message(s) be sent from the initiator to the target. The target invokes this phase in response to the attention condition created by the initiator (see 6.2.1).

The target shall assert the C/D and MSG signals and negate the I/O signal during the REQ/ACK handshake(s) of this phase. The target shall handshake byte(s) in this phase until the ATN signal is negated, except when rejecting a message.

If the target detects one or more parity error(s) on the message byte(s) received, it may indicate its desire to retry the message(s) by asserting the REQ signal after detecting the ATN signal has gone false and prior to changing to any other phase. The initiator, upon detecting this condition, shall resend all of the previous message byte(s) in the

--`,,```,,,,````-`-`,,`,,`,`,,`---

Copyright International Organization for Standardization
Provided by IHS under license with ISO
No reproduction or networking permitted without license from IHS Not for Resale

same order as previously sent during this phase. When resending more than one message byte, the initiator shall assert the ATN signal at least two deskew delays prior to asserting the ACK signal on the first byte and shall maintain the ATN signal asserted until the last byte is sent as described in 6.2.1.

If the target does not retry the MESSAGE OUT phase or it exhausts its retry limit it may

a) return CHECK CONDITION status and set the sense key to ABORTED COMMAND and the additional sense code to MESSAGE ERROR or;
b) indicate an exception condition by performing an unexpected disconnect.

The target may act on messages as received as long as no parity error is detected and may ignore all remaining messages sent under one ATN condition after a parity error is detected. When a sequence of messages is resent by an initiator because of a target detected parity error, the target shall not act on any message which it acted on the first time received.

If the target receives all of the message byte(s) successfully (i.e. no parity errors), it shall indicate that it does not wish to retry by changing to any information transfer phase other than the MESSAGE OUT phase and transfer at least one byte. The target may also indicate that it has successfully received the message byte(s) by changing to the BUS FREE phase (e.g. ABORT or BUS DEVICE RESET messages).

6.1.10 Signal restrictions between phases

When the SCSI bus is between two information transfer phases, the following restrictions shall apply to the SCSI bus signals:

a) The BSY, SEL, REQ, REQB, ACK and ACKB signals shall not change.
b) The C/D, I/O, MSG, and DATA BUS signals may change. When switching the DATA BUS direction from out (initiator driving) to in (target driving), the target shall delay driving the DATA BUS by at least a data release delay plus a bus settle delay after asserting the I/O signal and the initiator shall release the DATA BUS no later than a data release delay after the transition of the I/O signal to true. When switching the DATA BUS direction from in (target driving) to out (initiator driving), the target shall release the DATA BUS no later than a deskew delay after negating the I/O signal.
c) The ATN and RST signals may change as defined under the descriptions for the attention condition (see 6.2.1) and reset condition (see 6.2.2).

6.2 SCSI bus conditions

The SCSI bus has two asynchronous conditions; the attention condition and the reset condition. These conditions cause the SCSI device to perform certain actions and can alter the phase sequence.

Furthermore, SCSI devices may not all be powered-on at the same time. This International Standard does not address power sequencing issues. However, each SCSI device, as it is powered on, should perform appropriate internal reset operations and internal test operations. Following a power-on to selection time after power-on, SCSI targets should be able to respond with appropriate status and sense data to the TEST UNIT READY, INQUIRY, and REQUEST SENSE commands.

6.2.1 Attention condition

The attention condition allows an initiator to inform a target that the initiator has a message ready. The target may get this message by performing a MESSAGE OUT phase.

The initiator creates the attention condition by asserting ATN at any time except during the ARBITRATION or BUS FREE phases.

Copyright International Organization for Standardization
Provided by IHS under license with ISO
No reproduction or networking permitted without license from IHS Not for Resale

The initiator shall negate the ATN signal at least two deskew delays before asserting the ACK signal while transferring the last byte of the messages indicated with a Yes in table 10. If the target detects that the initiator failed to meet this requirement, then the target shall go to BUS FREE phase (see unexpected disconnect, 6.1.1).

The initiator shall assert the ATN signal at least two deskew delays before negating the ACK signal for the last byte transferred in a bus phase for the attention condition to be honoured before transition to a new bus phase. Asserting the ATN signal later might not be honoured until a later bus phase and then may not result in the expected action.

A target shall respond with MESSAGE OUT phase as follows:

a) If the ATN signal becomes true during a COMMAND phase, the target shall enter MESSAGE OUT phase after transferring part or all of the command descriptor block bytes.
b) If the ATN signal becomes true during a DATA phase, the target shall enter MESSAGE OUT phase at the target's earliest convenience (often, but not necessarily on a logical block boundary). The initiator shall continue REQ/ACK handshakes until it detects the phase change.
c) If the ATN signal becomes true during a STATUS phase, the target shall enter MESSAGE OUT phase after the status byte has been acknowledged by the initiator.
d) If the ATN signal becomes true during a MESSAGE IN phase, the target shall enter MESSAGE OUT phase before it sends another message. This permits a MESSAGE PARITY ERROR message from the initiator to be associated with the appropriate message.
e) If the ATN signal becomes true during a SELECTION phase and before the initiator releases the BSY signal, the target shall enter MESSAGE OUT phase immediately after that SELECTION phase.
f) If the ATN signal becomes true during a RESELECTION phase, the target shall enter MESSAGE OUT phase after the target has sent its IDENTIFY message for that RESELECTION phase.

NOTE 29 The initiator should only assert the ATN signal during a RESELECTION phase to transmit a BUS DEVICE RESET or DISCONNECT message. Other uses may result in ambiguities concerning the nexus.

The initiator shall keep the ATN signal asserted if more than one byte is to be transferred. The initiator may negate the ATN signal at any time except it shall not negate the ATN signal while the ACK signal is asserted during a MESSAGE OUT phase. Normally, the initiator negates the ATN signal while the REQ signal is true and the ACK signal is false during the last REQ/ACK handshake of the MESSAGE OUT phase.

6.2.2 Reset condition

The reset condition is used to immediately clear all SCSI devices from the bus. This condition shall take precedence over all other phases and conditions. Any SCSI device may create the reset condition by asserting the RST signal for a minimum of a reset hold time.

All SCSI devices shall release all SCSI bus signals (except the RST signal) within a bus clear delay of the transition of the RST signal to true. The BUS FREE phase always follows the reset condition.

The effect of the reset condition on I/O processes that have not completed, SCSI device reservations, and SCSI device operating modes is determined by whether the SCSI device has implemented the hard reset alternative or the soft reset alternative (one of which shall be implemented) as defined in 6.2.2.1 and 6.2.2.2. The hard and soft reset alternatives are mutually exclusive within a system. A facility for targets to report which reset alternative is implemented is provided in the SftRe bit of the INQUIRY data (see 8.2.5).

NOTE 30 Environmental conditions (e.g. static discharge) may generate brief glitches on the RST signal. It is recommended that SCSI devices not react to these glitches. The manner of rejecting glitches is vendor-specific. The bus clear delay following a RST signal transition to true is measured from the original transition of the RST signal, not from the time that the signal has been confirmed. This limits the time to confirm the RST signal to a maximum of a bus clear delay.

Copyright International Organization for Standardization
Provided by IHS under license with ISO
No reproduction or networking permitted without license from IHS Not for Resale

6.2.2.1 Hard reset alternative

SCSI devices that implement the hard reset alternative, upon detection of the reset condition, shall:

a) clear all I/O processes including queued I/O processes.
b) release all SCSI device reservations.
c) return any SCSI device operating modes to their appropriate initial conditions, similar to those conditions that would be found after a normal power-on reset. MODE SELECT conditions shall be restored to their last saved values if saved values have been established. MODE SELECT conditions for which no values have been saved shall be returned to their default values.
d) unit attention condition shall be set (see 7.9).

It is recommended that following a reset to selection time after a hard reset condition ends, SCSI targets be able to respond with appropriate status and sense data to the TEST UNIT READY, INQUIRY, and REQUEST SENSE commands.

6.2.2.2 Soft reset alternative

SCSI devices that implement the soft reset alternative, upon detection of the reset condition, shall:

a) Attempt to complete any I/O processes which have not completed and that were fully identified
b) Preserve all SCSI device reservations
c) Preserve any SCSI device operating modes (MODE SELECT, PREVENT/ALLOW MEDIUM REMOVAL commands, etc.)
d) Preserve all the information required to continue normal dispatching of I/O processes queued prior to the reset condition.

The soft reset alternative allows an initiator to reset the SCSI bus with minimum disruption to the operation of other initiators in a multiple initiator system. To ensure proper operation the following conditions shall be met.

a) An initiator shall not consider an I/O process to be fully identified until the IDENTIFY message (and queue tag message, if any) is sent to the target and the target responds by changing to any other information transfer phase and requests that at least one byte be transferred.
b) A target shall consider an I/O process to be fully identified when it successfully receives the IDENTIFY message and any queue tag message and the initiator negates the ATN signal.
c) If an initiator selects a logical unit for which there already is an active I/O process with the same queue tag (if any) for the same initiator, the target shall clear the original I/O process and perform the new I/O process.
d) If a target reselects an initiator to continue an I/O process for which the initiator has no record, the initiator shall abort that I/O process by sending the ABORT or ABORT TAG message, depending on whether the reselecting I/O process is a tagged I/O process.
e) An initiator shall consider an I/O process to be completed when it negates ACK for a successfully received COMMAND COMPLETE message.
f) A target shall consider an I/O process to be completed when it detects the transition of ACK to false for the COMMAND COMPLETE message with the ATN signal false.
g) An initiator shall not negate the ACK signal for the SAVE DATA POINTER message until it has actually saved the data pointer for the I/O process.
h) A target shall consider the data pointer to be saved when it detects the transition of the ACK signal to false for the SAVE DATA POINTER message with the ATN signal false.
i) If the reset condition occurs between the time that the target asserts the REQ signal for the SAVE DATA POINTER message and it detects the transition of the ACK signal to false, the target shall terminate the I/O process with CHECK CONDITION status. The target shall set the sense key to ABORTED COMMAND. This is necessary because the target cannot determine whether the data pointer has actually been saved.

NOTE 31 If the ATN signal is true in conditions f) or h), the target would normally switch to MESSAGE OUT phase and attempt to transfer a message byte. If the reset condition occurs before the target successfully receives the message byte, it may assume that the initiator has not successfully received the COMMAND COMPLETE message or the SAVE DATA POINTER message. In the case of COMMAND COMPLETE message, the target may reselect the initiator and attempt to send the COMMAND COMPLETE message again. In the case of the SAVE DATA POINTER message, the target may reselect the initiator and terminate the I/O process as described in condition i).

Copyright International Organization for Standardization
Provided by IHS under license with ISO
No reproduction or networking permitted without license from IHS Not for Resale

6.3 SCSI bus phase sequences

The order in which phases are used on the SCSI bus follows a prescribed sequence.

The reset condition can abort any phase and is always followed by the BUS FREE phase. Also any other phase can be followed by the BUS FREE phase but many such instances are error conditions (see 6.1.1).

The additional allowable sequences shall be as shown in Figure 16. The normal progression is from the BUS FREE phase to ARBITRATION, from ARBITRATION to SELECTION or RESELECTION, and from SELECTION or RESELECTION to one or more of the information transfer phases (COMMAND, DATA, STATUS, or MESSAGE). The final information transfer phase is normally the MESSAGE IN phase where a DISCONNECT, or COMMAND COMPLETE message is transferred, followed by the BUS FREE phase.

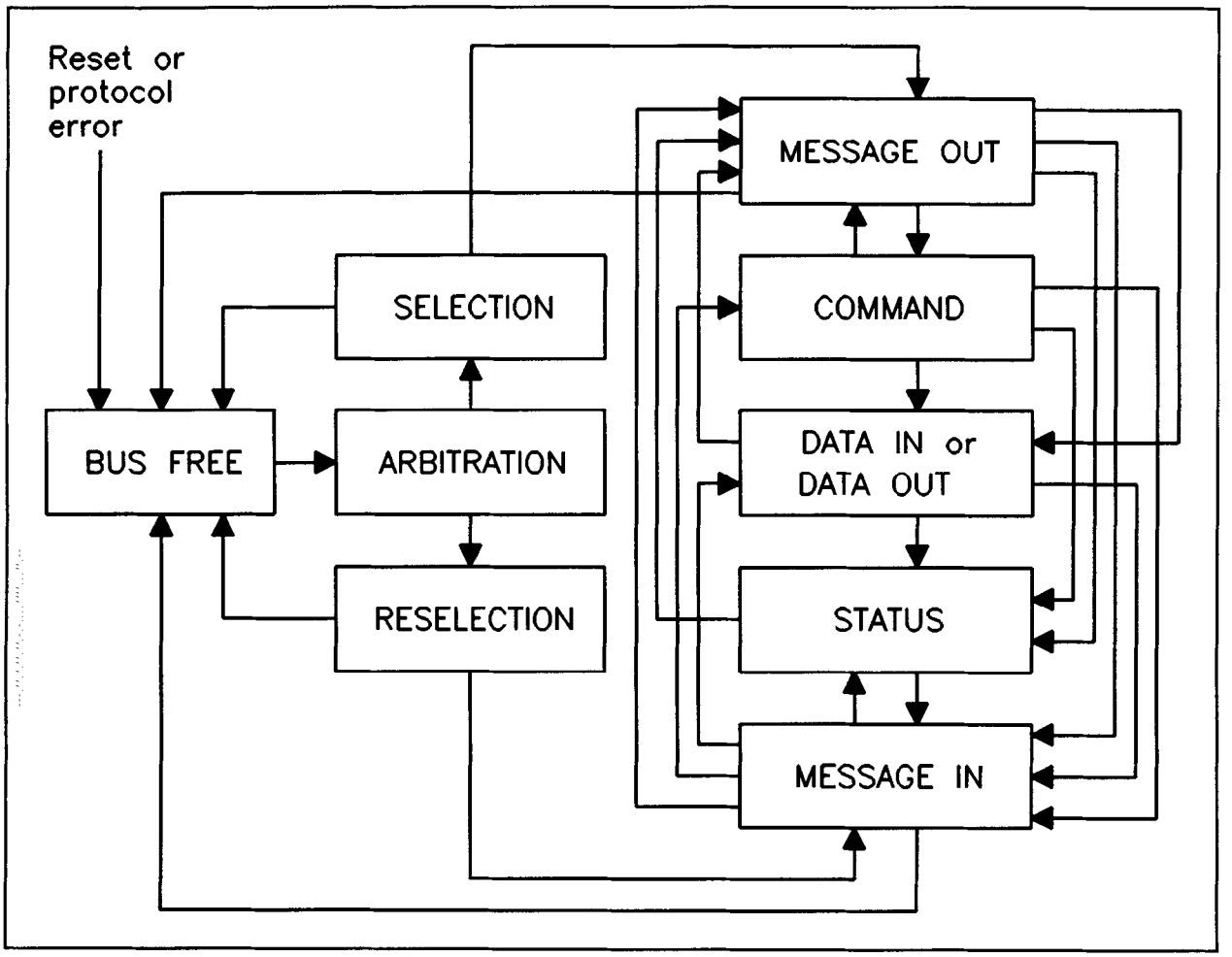

Figure 16 - Phase sequences

Copyright International Organization for Standardization
Provided by IHS under license with ISO
No reproduction or networking permitted without license from IHS
Not for Resale

6.4 SCSI pointers

Consider the system shown in figure 17 in which an initiator and target communicate on the SCSI bus in order to execute an I/O process.

The SCSI architecture provides for a set of three pointers for each I/O process, called the saved pointers. The set of three pointers consist of one for the command, one for the data, and one for the status. When an I/O process becomes active, its three saved pointers are copied into the initiator's set of three current pointers. There is only one set of current pointers in each initiator. The current pointers point to the next command, data, or status byte to be transferred between the initiator's memory and the target. The saved and current pointers reside in the initiator.

The saved command pointer always points to the start of the command descriptor block (see 7.2) for the I/O process. The saved status pointer always points to the start of the status area for the I/O process. The saved data pointer points to the start of the data area until the target sends a SAVE DATA POINTER message (see 6.6.20) for the I/O process.

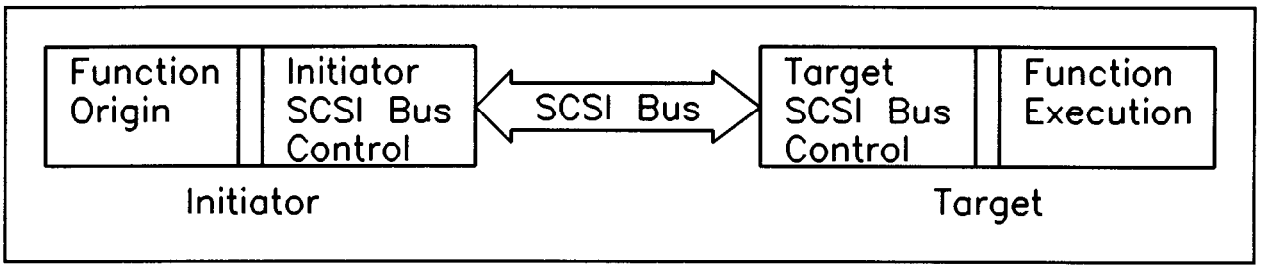

Figure 17 - Simplified SCSI system

In response to the SAVE DATA POINTER message, the initiator stores the value of the current data pointer into the saved data pointer for that I/O process. The target may restore the current pointers to the saved pointer values for the active I/O process by sending a RESTORE POINTERS message (see 6.6.19) to the initiator. The initiator then copies the set of saved pointers into the set of current pointers. Whenever a target disconnects from the bus, only the set of saved pointers are retained. The set of current pointers is restored from the set of saved pointers upon reconnection of the I/O process.

NOTE 32 Since the data pointer value may be modified by the target before the I/O process ends, it should not be used to test for actual transfer length because it is not reliable.

Copyright International Organization for Standardization
Provided by IHS under license with ISO
No reproduction or networking permitted without license from IHS Not for Resale

6.5 Message system description

The message system allows communication between an initiator and target for the purpose of interface management. A message may be one, two, or multiple bytes in length. One or more messages may be sent during a single MESSAGE phase, but a message may not be split between multiple MESSAGE phases. The initiator is required to end the MESSAGE OUT phase (by negating ATN) when it sends certain messages identified in table 10.

One-byte, two-byte, and extended message formats are defined. The first byte of the message determines the format as defined in table 9.

Table 9 - Message format

Value	Message format
00h	One-byte message (COMMAND COMPLETE)
01h	Extended messages
02h - 1Fh	One-byte messages
20h - 2Fh	Two-byte messages
30h - 7Fh	Reserved
80h - FFh	One-byte message (IDENTIFY)

One-byte messages consist of a single byte transferred during a MESSAGE phase. The value of the byte determines which message is to be performed as defined in table 10.

Copyright International Organization for Standardization
Provided by IHS under license with ISO
No reproduction or networking permitted without license from IHS Not for Resale

Table 10 - Message codes

Code	Support		Message Name	Direction		Negate ATN before last ACK
	Init	Targ				
06h	O	M	ABORT		Out	Yes
0Dh	O	O	ABORT TAG see note 1)		Out	Yes
0Ch	O	M	BUS DEVICE RESET		Out	Yes
0Eh	O	O	CLEAR QUEUE see note 1)		Out	Yes
00h	M	M	COMMAND COMPLETE	In		——
04h	O	O	DISCONNECT	In		——
04h	O	O	DISCONNECT		Out	Yes
80h+	M	O	IDENTIFY	In		——
80h+	M	M	IDENTIFY		Out	No
23h	O	O	IGNORE WIDE RESIDUE (two bytes)	In		——
0Fh	O	O	INITIATE RECOVERY	In		——
0Fh	O	O	INITIATE RECOVERY see note 2)		Out	Yes
05h	M	M	INITIATOR DETECTED ERROR		Out	Yes
0Ah	O	O	LINKED COMMAND COMPLETE	In		——
0Bh	O	O	LINKED COMMAND COMPLETE (WITH FLAG)	In		——
09h	M	M	MESSAGE PARITY ERROR		Out	Yes
07h	M	M	MESSAGE REJECT	In	Out	Yes
***	O	O	MODIFY DATA POINTER	In		——
08h	M	M	NO OPERATION		Out	Yes
			Queue tag messages (two bytes)			
21h	O	O	HEAD OF QUEUE TAG		Out	No
22h	O	O	ORDERED QUEUE TAG		Out	No
20h	O	O	SIMPLE QUEUE TAG	In	Out	No
10h	O	O	RELEASE RECOVERY		Out	Yes
03h	O	O	RESTORE POINTERS	In		——
02h	O	O	SAVE DATA POINTER	In		——
***	O	O	SYNCHRONOUS DATA TRANSFER REQUEST	In	Out	Yes
11h	O	O	TERMINATE I/O PROCESS		Out	Yes
***	O	O	WIDE DATA TRANSFER REQUEST	In	Out	Yes
12h-1Fh			Reserved			
24h-2Fh			Reserved for two-byte messages			
30h-7Fh			Reserved			

Key:
M = Mandatory support, O = Optional support.
In = Target to initiator, Out = Initiator to target.
Yes = Initiator shall negate ATN before last ACK of message.
No = Initiator may or may not negate ATN before last ACK of message. (see attention condition, 6.2.1.)
—— = Not applicable
*** = Extended message (see tables 11 and 12)
80h+ = Codes 80h through FFh are used for IDENTIFY messages (see table 13).

NOTES
1 The ABORT TAG and CLEAR QUEUE messages are required if tagged queuing is implemented.
2 Outbound INITIATE RECOVERY messages are only valid during the asynchronous event notification protocol.

Two-byte messages consist of two consecutive bytes transferred during a MESSAGE phase. The value of the first byte determines which message is to be performed as defined in table 10. The second byte is a parameter byte which is used as defined in the message description (see 6.6).

A value of one in the first byte of a message indicates the beginning of a multiple-byte extended message. The minimum number of bytes sent for an extended message is three. The extended message format and the extended message codes are shown in tables 11 and 12, respectively.

Copyright International Organization for Standardization
Provided by IHS under license with ISO
No reproduction or networking permitted without license from IHS Not for Resale

Table 11 - Extended message format

Bit / Byte	7	6	5	4	3	2	1	0
0	Extended message (01h)							
1	Extended message length (n)							
2	Extended message code (y)							
3	Extended message arguments							
n+1								

The extended message length specifies the length in bytes of the extended message code plus the extended message arguments to follow. Therefore, the total length of the message is equal to the extended message length plus two. A value of zero for the extended message length indicates 256 bytes follow.

The extended message codes are listed in table 12. The extended message arguments are specified within the extended message descriptions.

Table 12 - Extended message codes

Code (y)	Description
02h	Reserved (see note)
00h	MODIFY DATA POINTER
01h	SYNCHRONOUS DATA TRANSFER REQUEST
03h	WIDE DATA TRANSFER REQUEST
04h - 7Fh	Reserved
80h - FFh	Vendor-specific

NOTE - Extended message code 02h was used for the EXTENDED IDENTIFY message in SCSI-1.

The first message sent by the initiator after the SELECTION phase shall be an IDENTIFY, ABORT, or BUS DEVICE RESET message. If a target receives any other message it shall go to BUS FREE phase (see unexpected disconnect, 6.1.1).

If the first message is an IDENTIFY message, then it may be immediately followed by other messages, such as the first of a pair of SYNCHRONOUS DATA TRANSFER REQUEST messages. If tagged queuing is used the queue tag message immediately follows the IDENTIFY message (see 6.6.7). The IDENTIFY message establishes a logical connection between the initiator and the specified logical unit or target routine within the target known as an I_T_L nexus or I_T_R nexus. After the RESELECTION phase, the target's first message shall be IDENTIFY. This allows the I_T_L nexus or I_T_R nexus to be reestablished. Only one logical unit or target routine shall be identified for any connection. If a target receives a second IDENTIFY message with a different logical unit number or target routine number during a connection, it shall go to BUS FREE phase (see unexpected disconnect, 6.1.1). The treatment of other logical unit addressing errors is described in 7.5.

All initiators shall implement the mandatory messages tabulated in the Init column of table 10. All targets shall implement the mandatory messages tabulated in the Targ column of table 10.

Whenever an I_T_L nexus or I_T_R nexus is established by an initiator that is allowing disconnection, the initiator shall ensure that the current pointers are equal to the saved pointers for that particular logical unit or target routine. An implied restore pointers operation shall occur as a result of a reconnection.

Copyright International Organization for Standardization
Provided by IHS under license with ISO
No reproduction or networking permitted without license from IHS Not for Resale

6.6 Messages

The SCSI messages are defined in this subclause.

6.6.1 ABORT

The ABORT message is sent from the initiator to the target to clear any I/O process for the I_T_x nexus. The target shall go to the BUS FREE phase following successful receipt of this message. The pending data, status, and I/O processes for any other nexus shall not be cleared.

If only an I_T nexus has been established, the target shall go to the BUS FREE phase. No status or message shall be sent for the current I/O process and no other I/O process shall be affected.

NOTES
33 The ABORT message in the case of only an I_T nexus is useful to an initiator that cannot get an IDENTIFY message through to the target due to parity errors and just needs to end the current connection. Any pending data, status, or queued I/O processes for the I_T nexus is not affected.
34 It is not possible to abort an I_T nexus on a reconnection because of item f) in 6.2.1.

It is not an error to issue this message to an I_T_x nexus that does not have an active or queued I/O process.

Previously established conditions, including MODE SELECT parameters, reservations, and extended contingent allegiance shall not be changed by the ABORT message.

NOTE 35 The BUS DEVICE RESET, CLEAR QUEUE, ABORT, and ABORT TAG messages provide a means to clear one or more I/O processes prior to normal termination. The BUS DEVICE RESET message clears all I/O processes for all initiators on all logical units and all target routines of the target. The CLEAR QUEUE message clears all I/O processes for all initiators on the specified logical unit or target routine of the target. The ABORT message clears all I/O processes for the selecting initiator on the specified logical unit or target routine of the target. The ABORT TAG message clears the current I/O process only.

6.6.2 ABORT TAG

The ABORT TAG message shall be implemented if tagged queuing is implemented and may be implemented if untagged queuing is implemented. The target shall go to the BUS FREE phase following successful receipt of this message. The target shall clear the current I/O process. If the target has already started execution of the I/O process, the execution shall be halted. The medium contents may have been modified before the execution was halted. In either case, any pending status or data for the I/O process shall be cleared and no status or ending message shall be sent to the initiator. Pending status, data, and commands for other active or queued I/O processes shall not be affected. Execution of other I/O processes queued for the I_T_x nexus shall not be aborted.

Previously established conditions, including MODE SELECT parameters, reservations, and extended contingent allegiance shall not be changed by the ABORT TAG message.

On a reconnection, the ABORT TAG message aborts the current I/O process if it is fully identified. If the I/O process is not fully identified (i.e. an I_T_L nexus exists, but the target is reconnecting for an I_T_L_Q nexus), then the I/O process is not aborted and the target goes to the BUS FREE phase.

NOTE 36 A nexus is not fully identified on a reconnection if the ATN signal is asserted during or prior to the IDENTIFY message and the target only has tagged I/O processes for that initiator on that logical unit.

Copyright International Organization for Standardization
Provided by IHS under license with ISO
No reproduction or networking permitted without license from IHS Not for Resale

6.6.3 BUS DEVICE RESET

The BUS DEVICE RESET message is sent from an initiator to direct a target to clear all I/O processes on that SCSI device. This message forces a hard reset condition to the selected SCSI device. The target shall go to the BUS FREE phase following successful receipt of this message. The target shall create a unit attention condition for all initiators (see 7.9).

6.6.4 CLEAR QUEUE

The CLEAR QUEUE message shall be implemented if tagged queuing is implemented and may be implemented if untagged queuing is implemented. The target shall go to the BUS FREE phase following successful receipt of this message. The target shall perform an action equivalent to receiving a series of ABORT messages from each initiator. All I/O processes, from all initiators, in the queue for the specified logical unit shall be cleared from the queue. All active I/O processes shall be terminated. The medium may have been altered by partially executed commands. All pending status and data for that logical unit or target routine for all initiators shall be cleared. No status or message shall be sent for any of the I/O processes. A unit attention condition shall be generated for all other initiators with I/O processes that either were active or were queued for that logical unit or target routine. When reporting the unit attention condition the additional sense code shall be set to COMMANDS CLEARED BY ANOTHER INITIATOR.

Previously established conditions, including MODE SELECT parameters, reservations, and extended contingent allegiance shall not be changed by the CLEAR QUEUE message.

6.6.5 COMMAND COMPLETE

The COMMAND COMPLETE message is sent from a target to an initiator to indicate that the execution of an I/O process has completed and that valid status has been sent to the initiator. After successfully sending this message, the target shall go to the BUS FREE phase by releasing the BSY signal. The target shall consider the message transmission to be successful when it detects the negation of ACK for the COMMAND COMPLETE message with the ATN signal false.

NOTE 37 The I/O process may have completed successfully or unsuccessfully as indicated in the status.

6.6.6 DISCONNECT

The DISCONNECT message is sent from a target to inform an initiator that the present connection is going to be broken (the target plans to disconnect by releasing the BSY signal), but that a later reconnect will be required in order to complete the current I/O process. This message shall not cause the initiator to save the data pointer. After successfully sending this message, the target shall go to the BUS FREE phase by releasing the BSY signal. The target shall consider the message transmission to be successful when it detects the negation of the ACK signal for the DISCONNECT message with the ATN signal false.

Targets that break data transfers into multiple connections shall end each successful connection (except possibly the last) with a SAVE DATA POINTER - DISCONNECT message sequence.

This message may also be sent from an initiator to a target to instruct the target to disconnect from the SCSI bus. If this option is supported, and after the DISCONNECT message is received, the target shall switch to MESSAGE IN phase, send the DISCONNECT message to the initiator (possibly preceded by SAVE DATA POINTER message), and then disconnect by releasing BSY. After releasing the BSY signal, the target shall not participate in another ARBITRATION phase for at least a disconnection delay or the time limit specified in the disconnect time limit mode parameter (see 8.3.3.2) whichever is greater. If this option is not supported or the target cannot disconnect at the time when it receives the DISCONNECT message from the initiator, the target shall respond by sending a MESSAGE REJECT message to the initiator.

Copyright International Organization for Standardization
Provided by IHS under license with ISO
No reproduction or networking permitted without license from IHS Not for Resale

6.6.7 IDENTIFY

The IDENTIFY message (see table 13) is sent by either the initiator or the target to establish an I_T_L nexus or an I_T_R nexus.

NOTE 38 Use of the IDENTIFY message to establish an I_T_R nexus allows connection to one of up to eight target routines or functions in the target. These target routines are expected to be used for maintenance and diagnostic purposes.

Table 13 - IDENTIFY message format

Bit	7	6	5	4	3	2	1	0
	Identify	DiscPriv	LUNTAR	Reserved	Reserved	LUNTRN		

The identify bit shall be set to one to specify that this is an IDENTIFY message.

A disconnect privilege (DiscPriv) bit of one specifies that the initiator has granted the target the privilege of disconnecting. A DiscPriv bit of zero specifies that the target shall not disconnect. This bit is not defined and shall be set to zero when an IDENTIFY message is sent by a target.

A logical unit target (LUNTAR) bit of zero specifies that the I/O process is directed to or from a logical unit. A LUNTAR bit of one specifies that the I/O process is directed to or from a target routine.

The logical unit number target routine number (LUNTRN) field specifies a logical unit number if the LUNTAR bit is zero. The LUNTRN field specifies a target routine number if the LUNTAR bit is one. The response to an invalid value in the LUNTRN field is described in 7.5.3. Only the INQUIRY and REQUEST SENSE commands are valid for target routines. If a target receives any other command for a target routine, it shall return CHECK CONDITION status and shall set the sense key to ILLEGAL REQUEST.

An IDENTIFY message is invalid if a reserved bit is set to one or if the LUNTAR bit is set to one and the target does not implement target routines. A device may respond to an invalid IDENTIFY message by immediately sending a MESSAGE REJECT message or by returning CHECK CONDITION status. If a CHECK CONDITION status is returned, the sense key shall be set to ILLEGAL REQUEST and the additional sense code shall be set to INVALID BITS IN IDENTIFY MESSAGE FIELD.

Only one logical unit number or target routine number shall be identified per I/O process. The initiator may send one or more IDENTIFY messages during a connection. A second IDENTIFY message with a different value in either the LUNTAR bit or LUNTRN field shall not be issued before a BUS FREE phase has occurred; if a target receives a second IDENTIFY message with a different value in either of these fields, it shall go to BUS FREE phase (see unexpected disconnect, 6.1.1). Thus an initiator may change the DiscPriv bit, but may not attempt to switch to another I/O process. (See the DTDC field of the disconnect-reconnect page (8.3.3.2) for additional controls over disconnection.)

An implied RESTORE POINTERS message shall be performed by the initiator prior to the assertion of the ACK signal on the next phase for an inbound IDENTIFY message sent during reconnection.

An implied RESTORE POINTERS message shall be performed by the initiator following successful identification of the nexus during the MESSAGE IN phase of a reconnection and before the negation of the ACK signal for the next transfer following the successful identification.

Identification is considered successful during an initial connection or an initiator reconnect when the target detects no error during the transfer of the IDENTIFY message and an optional queue tag message in the MESSAGE OUT phase immediately following the SELECTION phase. See 6.5 for the ordering of the IDENTIFY and queue tag messages. See 6.1.9.2 for handling target detected errors during the MESSAGE OUT phase.

Copyright International Organization for Standardization
Provided by IHS under license with ISO
No reproduction or networking permitted without license from IHS Not for Resale

Identification is considered successful during a target reconnect when the ATN signal is not asserted during the transfer of either the IDENTIFY message or the SIMPLE QUEUE TAG message for an I_T_L_Q nexus in the MESSAGE IN phase immediately following the RESELECTION phase. See clause 6.5 for the ordering of the IDENTIFY and queue tag messages. See 6.2.1, item d), for handling target detected errors during the MESSAGE IN phase.

6.6.8 IGNORE WIDE RESIDUE

Table 14 - IGNORE WIDE RESIDUE message format

Bit / Byte	7	6	5	4	3	2	1	0
0	Message code (23h)							
1	Ignore (01h, 02h, 03h)							

The IGNORE WIDE RESIDUE message (see table 14) shall be sent from a target to indicate that the number of valid bytes sent during the last REQ/ACK handshake and REQB/ACKB handshake of a DATA IN phase is less than the negotiated transfer width. The ignore field indicates the number of invalid data bytes transferred. This message shall be sent immediately following that DATA IN phase and prior to any other messages. The ignore field is defined in table 15.

NOTE 39 More than one IGNORE WIDE RESIDUE message may occur during an I/O process.

Table 15 - Ignore field definition

Ignore	Invalid data bits	
	32-bit transfers	16-bit transfers
00h	Reserved	Reserved
01h	DB(31-24)	DB(15-8)
02h	DB(31-16)	Reserved
03h	DB(31-8)	Reserved
04h - FFh	Reserved	Reserved

Even though a byte is invalid its corresponding parity bit shall be valid for the value transferred. For 16-bit transfers, DB(31-16) are always invalid and the corresponding parity bits are also invalid.

6.6.9 INITIATE RECOVERY

A target that supports extended contingent allegiance shall inform the initiator it is entering this condition by sending an INITIATE RECOVERY message immediately following a CHECK CONDITION or COMMAND TERMINATED status. The extended contingent allegiance condition remains in effect until terminated as described in 7.7.

If an asynchronous event occurs, the target may enter an extended contingent allegiance condition by becoming a temporary initiator and sending the INITIATE RECOVERY message following the IDENTIFY message and any queue tag message and before the COMMAND phase of the SEND command that is used to perform the asynchronous event notification (see 7.5.5). The successful transmission of this message establishes the extended contingent allegiance condition which remains in effect until terminated as described in 7.7.

NOTE 40 If the target notifies multiple initiators of the asynchronous event, it should include the INITIATE RECOVERY message in only one of the notifications.

A MESSAGE REJECT response to an INITIATE RECOVERY message indicates that an extended contingent allegiance condition shall not be established. The enabled or disabled state of an extended contingent allegiance (see 8.3.3.1) is not changed by the rejection of an INITIATE RECOVERY message.

Copyright International Organization for Standardization
Provided by IHS under license with ISO
No reproduction or networking permitted without license from IHS Not for Resale

6.6.10 INITIATOR DETECTED ERROR

The INITIATOR DETECTED ERROR message is sent from an initiator to inform a target that an error has occurred that does not preclude the target from retrying the operation. The source of the error may either be related to previous activities on the SCSI bus or may be internal to the initiator and unrelated to any previous SCSI bus activity. Although present pointer integrity is not assured, a RESTORE POINTERS message or a disconnect followed by a reconnect, shall cause the pointers to be restored to their defined prior state.

6.6.11 LINKED COMMAND COMPLETE

The LINKED COMMAND COMPLETE message is sent from a target to an initiator to indicate that the execution of a linked command has completed and that status has been sent. The initiator shall then set the pointers to the initial state for the next linked command.

6.6.12 LINKED COMMAND COMPLETE (WITH FLAG)

The LINKED COMMAND COMPLETE (WITH FLAG) message is sent from a target to an initiator to indicate that the execution of a linked command (with the flag bit set to one) has completed and that status has been sent. The initiator shall then set the pointers to the initial state of the next linked command. Typically this message would be used to cause an interrupt in the initiator between two linked commands.

6.6.13 MESSAGE PARITY ERROR

The MESSAGE PARITY ERROR message is sent from the initiator to the target to indicate that it received a message byte with a parity error (see 6.1.9.2).

In order to indicate its intentions of sending this message, the initiator shall assert the ATN signal prior to its release of the ACK signal for the REQ/ACK handshake of the message byte that has the parity error. This provides an interlock so that the target can determine which message byte has the parity error. If the target receives this message under any other circumstance, it shall signal a catastrophic error condition by releasing the BSY signal without any further information transfer attempt (see 6.1.1).

If after receiving the MESSAGE PARITY ERROR message the target returns to the MESSAGE IN phase before switching to some other phase, the target shall resend the entire message that had the parity error.

6.6.14 MESSAGE REJECT

The MESSAGE REJECT message is sent from either the initiator or target to indicate that the last message or message byte it received was inappropriate or has not been implemented.

In order to indicate its intentions of sending this message, the initiator shall assert the ATN signal prior to its release of the ACK signal for the REQ/ACK handshake of the message byte that is to be rejected. If the target receives this message under any other circumstance, it shall reject this message.

When a target sends this message, it shall change to MESSAGE IN phase and send this message prior to requesting additional message bytes from the initiator. This provides an interlock so that the initiator can determine which message byte is rejected.

After a target sends a MESSAGE REJECT message and if the ATN signal is still asserted, then it shall return to the MESSAGE OUT phase. The subsequent MESSAGE OUT phase shall begin with the first byte of a message.

Copyright International Organization for Standardization
Provided by IHS under license with ISO
No reproduction or networking permitted without license from IHS Not for Resale

6.6.15 MODIFY DATA POINTER Message

Table 16 - MODIFY DATA POINTER

Bit / Byte	7	6	5	4	3	2	1	0
0	Extended message (01h)							
1	Extended message length (05h)							
2	MODIFY DATA POINTER code (00h)							
3	(MSB) Argument							
6								(LSB)

The MODIFY DATA POINTER message (see table 16) is sent from the target to the initiator and requests that the signed argument be added (two's complement) to the value of the current data pointer.

6.6.16 NO OPERATION

The NO OPERATION message is sent from an initiator in response to a target's request for a message when the initiator does not currently have any other valid message to send.

For example, if the target does not respond to the attention condition until a later phase and at that time the original message is no longer valid the initiator may send the NO OPERATION message when the target enters the MESSAGE OUT phase.

6.6.17 Queue tag messages

Table 17 - Queue tag message format

Bit / Byte	7	6	5	4	3	2	1	0
0	Message code (20h, 21h, 22h)							
1	Queue tag (00h - FFh)							

Table 17 defines the format for the queue tag messages. If the target implements tagged queuing, all of the queue tag messages are mandatory: HEAD OF QUEUE TAG, ORDERED QUEUE TAG, and SIMPLE QUEUE TAG. Tagged queuing is only defined for logical units, not for target routines.

If a target does not implement tagged queuing and a queue tag message is received or if a queue tag message is received for a target routine, it shall respond with a MESSAGE REJECT message and accept the I/O process as if it were untagged.

The queue tag messages are used to specify an identifier, called a queue tag, for the I/O process that establishes the I_T_L_Q nexus. The queue tag field is an 8-bit unsigned integer assigned by the initiator during an initial connection. The queue tag for every I/O process for each I_T_L nexus should be unique. If the target receives a queue tag that is currently in use for the I_T_L nexus, then it shall respond as defined in 7.5.2. A queue tag becomes available for reassignment when the I/O process ends. The numeric value of a queue tag has no effect on the order of execution.

Copyright International Organization for Standardization
Provided by IHS under license with ISO
No reproduction or networking permitted without license from IHS Not for Resale

NOTE 41 For each logical unit on each target, each initiator has up to 256 queue tags to assign to I/O processes. Thus a target with eight logical units could have up to 14 336 I/O processes concurrently in existence if there were seven initiators on the bus.

Whenever an initiator connects to a target, the appropriate queue tag message shall be sent immediately following the IDENTIFY message and within the same MESSAGE OUT phase to establish the I_T_L_Q nexus for the I/O process. Only one I_T_L_Q nexus may be established during a connection. If a queue tag message is not sent, then only an I_T_x nexus is established for the I/O process (untagged command).

Whenever a target reconnects to an initiator to continue a tagged I/O process, the SIMPLE QUEUE TAG message shall be sent immediately following the IDENTIFY message and within the same MESSAGE IN phase to revive the I_T_L_Q nexus for the I/O process. Only one I_T_L_Q nexus may be revived during a reconnection. If the SIMPLE QUEUE TAG message is not sent, then only an I_T_x nexus is revived for the I/O process (untagged command).

If a target attempts to reconnect using an invalid queue tag, then the initiator should respond with an ABORT TAG message.

6.6.17.1 HEAD OF QUEUE TAG

The HEAD OF QUEUE TAG message specifies that the I/O process be placed first in that logical unit's command queue. An I/O process already being executed by the target shall not be preempted. A subsequent I/O process received with a HEAD OF QUEUE TAG message shall be placed at the head of the command queue for execution in last-in, first-out order.

6.6.17.2 ORDERED QUEUE TAG

The ORDERED QUEUE TAG message specifies that the I/O process be placed in that logical unit's command queue for execution in the order received. All queued I/O processes for the logical unit received prior to this I/O process shall be executed before this I/O process is executed. All queued I/O processes received after this I/O process shall be executed after this I/O process, except for I/O processes received with a HEAD OF QUEUE TAG message.

6.6.17.3 SIMPLE QUEUE TAG

The SIMPLE QUEUE TAG message specifies that the I/O process be placed in that logical unit's command queue. The order of execution is described in 7.8.

6.6.18 RELEASE RECOVERY

The RELEASE RECOVERY message is sent from an initiator to a target to terminate an extended contingent allegiance condition previously established by an INITIATE RECOVERY message. This message shall be sent immediately following the IDENTIFY message in the same MESSAGE OUT phase. The extended contingent allegiance condition ends upon successful receipt of the RELEASE RECOVERY message. The target shall go to the BUS FREE phase following successful receipt of this message.

If a RELEASE RECOVERY message is received by a target that implements extended contingent allegiance when an extended contingent allegiance condition does not exist, the message shall not be rejected and the target shall go to the BUS FREE phase.

6.6.19 RESTORE POINTERS

The RESTORE POINTERS message is sent from a target to direct the initiator to copy the most recently saved command, data, and status pointers for the I/O process to the corresponding current pointers. The command and status pointers shall be restored to the beginning of the present command and status areas. The data pointer shall be restored to the value at the beginning of the data area in the absence of a SAVE DATA POINTER message or to the value at the point at which the last SAVE DATA POINTER message occurred for that nexus.

Copyright International Organization for Standardization
Provided by IHS under license with ISO
No reproduction or networking permitted without license from IHS Not for Resale

6.6.20 SAVE DATA POINTER

The SAVE DATA POINTER message is sent from a target to direct the initiator to copy the current data pointer to the saved data pointer for the current I/O process. (See 6.4 for a definition of pointers.)

6.6.21 SYNCHRONOUS DATA TRANSFER REQUEST

Table 18 - SYNCHRONOUS DATA TRANSFER REQUEST

Bit / Byte	7	6	5	4	3	2	1	0
0	Extended message (01h)							
1	Extended message length (03h)							
2	SYNCHRONOUS DATA TRANSFER REQUEST code (01h)							
3	Transfer period factor							
4	REQ/ACK offset							

A SYNCHRONOUS DATA TRANSFER REQUEST (SDTR) message (see table 18) exchange shall be initiated by an SCSI device whenever a previously-arranged data transfer agreement may have become invalid. The agreement becomes invalid after any condition which may leave the data transfer agreement in an indeterminate state such as:

a) after a hard reset condition;
b) after a BUS DEVICE RESET message and;
c) after a power cycle.

In addition, an SCSI device may initiate an SDTR message exchange whenever it is appropriate to negotiate a new data transfer agreement (either synchronous or asynchronous). SCSI devices that are capable of synchronous data transfers shall not respond to an SDTR message with a MESSAGE REJECT message.

NOTES
42 Renegotiation at every selection is not recommended, since a significant performance impact is likely.
43 Due to historical problems with early host adapters that could not accept an SDTR message, some targets may not initiate synchronous negotiation after a power cycle as required by this International Standard. Host adapters that support synchronous mode may avoid the ensuing failure modes when the target is independently power cycled by initiating a synchronous negotiation on each REQUEST SENSE and INQUIRY command.

The SDTR message exchange establishes the permissible transfer periods and the REQ/ACK offsets for all logical units and target routines on the two devices. This agreement only applies to data phases.

The transfer period factor times four is the value of the transfer period. The transfer period is the minimum time allowed between leading edges of successive REQ pulses and of successive ACK pulses to meet the device requirements for successful reception of data.

The REQ/ACK offset is the maximum number of REQ pulses allowed to be outstanding before the leading edge of its corresponding ACK pulse is received at the target. This value is chosen to prevent overflow conditions in the device's reception buffer and offset counter. A REQ/ACK offset value of zero shall indicate asynchronous data transfer mode; a value of FFh shall indicate unlimited REQ/ACK offset.

The originating device (the device that sends the first of the pair of SDTR messages) sets its values according to the rules above to permit it to receive data successfully. If the responding device can also receive data successfully with these values (or smaller transfer periods or larger REQ/ACK offsets or both), it returns the same values in its SDTR message. If it requires a larger transfer period, a smaller REQ/ACK offset, or both in order to receive data successfully, it substitutes values in its SDTR message as required, returning unchanged any value not required to be changed. Each device when transmitting data shall respect the limits set by the other's SDTR message, but it is

Copyright International Organization for Standardization
Provided by IHS under license with ISO
No reproduction or networking permitted without license from IHS Not for Resale

permitted to transfer data with larger transfer periods, smaller REQ/ACK offsets, or both than specified in the other's SDTR message. The successful completion of an exchange of SDTR messages implies an agreement as follows:

Responding device SDTR response	Implied agreement
a) Non-zero REQ/ACK offset	Each device transmits data with a transfer period equal to or greater than and a REQ/ACK offset equal to or less than the values received in the other device's SDTR message.
b) REQ/ACK offset equal to zero	Asynchronous transfer
c) MESSAGE REJECT message	Asynchronous transfer

If the initiator recognizes that negotiation is required, it asserts the ATN signal and sends a SDTR message to begin the negotiating process. After successfully completing the MESSAGE OUT phase, the target shall respond with the proper SDTR message. If an abnormal condition prevents the target from returning an appropriate response, both devices shall go to asynchronous data transfer mode for data transfers between the two devices.

Following target response in item a) above, the implied agreement for synchronous operation shall be considered to be negated by both the initiator and the target if the initiator asserts the ATN signal and the first message out is either MESSAGE PARITY ERROR or MESSAGE REJECT. In this case, both devices shall go to asynchronous data transfer mode for data transfers between the two devices. For the MESSAGE PARITY ERROR case, the implied agreement shall be reinstated if a retransmittal of the second of the pair of messages is successfully accomplished. After a vendor-specific number of retry attempts (greater than zero), if the target receives a MESSAGE PARITY ERROR message, it shall terminate the retry activity. This may be done either by changing to any other information transfer phase and transferring at least one byte of information or by going to the BUS FREE phase (see 6.1.1). The initiator shall accept such action as aborting the negotiation, and both devices shall go to asynchronous data transfer mode for data transfers between the two devices.

If the target recognizes that negotiation is required, it sends an SDTR message to the initiator. Prior to releasing the ACK signal on the last byte of the SDTR message from the target, the initiator shall assert the ATN signal and respond with its SDTR message or with a MESSAGE REJECT message. If an abnormal condition prevents the initiator from returning an appropriate response, both devices shall go to asynchronous data transfer mode for data transfers between the two devices.

Following an initiator's responding SDTR message, an implied agreement for synchronous operation shall not be considered to exist until the target leaves the MESSAGE OUT phase, indicating that the target has accepted the negotiation. After a vendor-specific number of retry attempts (greater than zero), if the target has not received the initiator's responding SDTR message, it shall go to the BUS FREE phase without any further information transfer attempt (see 6.1.1). This indicates that a catastrophic error condition has occurred. Both devices shall go to asynchronous data transfer mode for data transfers between the two devices.

If, following an initiator's responding SDTR message, the target shifts to MESSAGE IN phase and the first message in is MESSAGE REJECT, the implied agreement shall be considered to be negated and both devices shall go to asynchronous data transfer mode for data transfers between the two devices.

The implied synchronous agreement shall remain in effect until a BUS DEVICE RESET message is received, until a hard reset condition occurs, or until one of the two SCSI devices elects to modify the agreement. The default data transfer mode is asynchronous data transfer mode. The default data transfer mode is entered at power on, after a BUS DEVICE RESET message, or after a hard reset condition.

Copyright International Organization for Standardization
Provided by IHS under license with ISO
No reproduction or networking permitted without license from IHS Not for Resale

6.6.22 TERMINATE I/O PROCESS

The TERMINATE I/O PROCESS message is sent from the initiator to the target to terminate the current I/O process without corrupting the medium.

With the following exceptions, the target shall terminate the current I/O process and return COMMAND TERMINATED status. The sense key shall be set to NO SENSE. The additional sense code and qualifier are set to I/O PROCESS TERMINATED.

If the associated I/O process involves a data phase, the target shall set the valid bit in the sense data to one and set the information field as follows:

a) If the command descriptor block specifies an allocation length or parameter list length, the information field shall be set to the difference (residue) between the number of bytes successfully transferred and the requested length.
b) If the command descriptor block specifies a transfer length field, the information field shall be set as defined in the REQUEST SENSE command (see 8.2.14).

If an error is detected for the associated I/O process the target shall ignore the TERMINATE I/O PROCESS message.

If the operation requested for the associated I/O process has been completed but status has not been returned, the target shall ignore the TERMINATE I/O PROCESS message.

If the target does not support this message or is unable to stop the current I/O process, it shall send a MESSAGE REJECT message to the initiator and continue the I/O process in a normal manner.

The effect of a TERMINATE I/O PROCESS message on the command queue depends on the queue error recovery option specified in the control mode page (see 8.3.3.1) and on whether or not a contingent allegiance condition is generated.

NOTE 44 The TERMINATE I/O PROCESS message provides a means for the initiator to request the target to reduce the transfer length of the current command to the amount that has already been transferred. The initiator can use the sense data to determine the actual number of bytes or blocks that have been transferred. This message is normally used by the initiator to stop a lengthy read, write, or verify operation when a higher-priority command is available to be executed. It is up to the initiator to complete the terminated command at a later time, if required.

6.6.23 WIDE DATA TRANSFER REQUEST

Table 19 - WIDE DATA TRANSFER REQUEST

Bit / Byte	7	6	5	4	3	2	1	0
0	Extended message (01h)							
1	Extended message length (02h)							
2	WIDE DATA TRANSFER REQUEST code (03h)							
3	Transfer width exponent							

A WIDE DATA TRANSFER REQUEST (WDTR) message (see table 19) exchange shall be initiated by an SCSI device whenever a previously-arranged transfer width agreement may have become invalid. The agreement becomes invalid after any condition which may leave the data transfer agreement in an indeterminate state such as:

a) after a hard reset condition;
b) after a BUS DEVICE RESET message and;
c) after a power cycle.

Copyright International Organization for Standardization
Provided by IHS under license with ISO
No reproduction or networking permitted without license from IHS Not for Resale

In addition, an SCSI device may initiate a WDTR message exchange whenever it is appropriate to negotiate a new transfer width agreement. SCSI devices that are capable of wide data transfers (greater than eight bits) shall not respond to a WDTR message with a MESSAGE REJECT message.

NOTE 45 Renegotiation at every selection is not recommended, since a significant performance impact is likely.

The WDTR message exchange establishes an agreement between two SCSI devices on the width of the data path to be used for DATA phase transfers between the two devices. This agreement applies to DATA IN and DATA OUT phases only. All other information transfer phases shall use an eight-bit data path.

If an SCSI device implements both wide data transfer option and synchronous data transfer option, then it shall negotiate the wide data transfer agreement prior to negotiating the synchronous data transfer agreement. If a synchronous data transfer agreement is in effect, then an SCSI device that accepts a WDTR message shall reset the synchronous agreement to asynchronous mode.

The transfer width is two to the transfer width exponent bytes wide. The transfer width that is established applies to all logical units on both SCSI devices. Valid transfer widths are 8 bits (m = 00h), 16 bits (m = 01h), and 32 bits (m = 02h). Values of m greater than 02h are reserved.

The originating SCSI device (the SCSI device that sends the first of the pair of WDTR messages) sets its transfer width value to the maximum data path width it elects to accommodate. If the responding SCSI device can also accommodate this transfer width, it returns the same value in its WDTR message. If it requires a smaller transfer width, it substitutes the smaller value in its WDTR message. The successful completion of an exchange of WDTR messages implies an agreement as follows:

Responding device WDTR response	Implied agreement
a) Non-zero transfer width	Each device transmits and receives data with a transfer width equal to the responding SCSI device's transfer width.
b) Transfer width equal to zero	Eight-bit data transfer
c) MESSAGE REJECT message	Eight-bit data transfer

If the initiator recognizes that negotiation is required, it asserts the ATN signal and sends a WDTR message to begin the negotiating process. After successfully completing the MESSAGE OUT phase, the target shall respond with the proper WDTR message. If an abnormal condition prevents the target from returning an appropriate response, both devices shall go to eight-bit data transfer mode for data transfers between the two devices.

Following target response in item a) above, the implied agreement for wide data transfers shall be considered to be negated by both the initiator and the target if the initiator asserts ATN and the first message out is either MESSAGE PARITY ERROR or MESSAGE REJECT. In this case, both devices shall go to eight-bit data transfer mode for data transfers between the two devices. For the MESSAGE PARITY ERROR case, the implied agreement shall be reinstated if a retransmittal of the second of the pair of messages is successfully accomplished. After a vendor-specific number of retry attempts (greater than zero), if the target receives a MESSAGE PARITY ERROR message, it shall terminate the retry activity. This may be done either by changing to any other information transfer phase and transferring at least one byte of information or by going to the BUS FREE phase (see 6.1.1). The initiator shall accept such action as aborting the negotiation, and both devices shall go to eight-bit data transfer mode for data transfers between the two devices.

If the target recognizes that negotiation is required, it sends a WDTR message to the initiator. Prior to releasing the ACK signal on the last byte of the WDTR message from the target, the initiator shall assert the ATN signal and respond with its WDTR message or with a MESSAGE REJECT message. If an abnormal condition prevents the initiator from returning an appropriate response, both devices shall go to eight-bit data transfer mode for data transfers between the two devices.

Copyright International Organization for Standardization
Provided by IHS under license with ISO
No reproduction or networking permitted without license from IHS Not for Resale

Following an initiator's responding WDTR message, an implied agreement for wide data transfer operation shall not be considered to exist until the target leaves the MESSAGE OUT phase, indicating that the target has accepted the negotiation. After a vendor-specific number of retry attempts (greater than zero), if the target has not received the initiator's responding WDTR message, it shall go to the BUS FREE phase without any further information transfer attempt (see 6.1.1). This indicates that a catastrophic error condition has occurred. Both devices shall go to eight-bit data transfer mode for data transfers between the two devices.

If, following an initiator's responding WDTR message, the target shifts to MESSAGE IN phase and the first message in is MESSAGE REJECT, the implied agreement shall be considered to be negated and both devices shall go to eight-bit data transfer mode for data transfers between the two devices.

The implied transfer width agreement shall remain in effect until a BUS DEVICE RESET message is received, until a hard reset condition occurs, or until one of the two SCSI devices elects to modify the agreement. The default data transfer width is eight-bit data transfer mode. The default data transfer mode is entered at power on, after a BUS DEVICE RESET message, or after a hard reset condition.

--`,,```,,,,````-`-`,,`,,`,`,,`---

Copyright International Organization for Standardization
Provided by IHS under license with ISO
No reproduction or networking permitted without license from IHS Not for Resale

7 SCSI commands and status

This clause defines the SCSI command and status structures and gives several examples.

By keeping to a minimum the functions essential to communicate via this protocol, a wide range of peripheral devices of varying capability can operate in the same environment. Because subsets of the full architecture may be implemented, optional functions are noted.

7.1 Command implementation requirements

The first byte of all SCSI commands shall contain an operation code as defined in this International Standard. Targets shall implement all commands with a mandatory operation code (see 7.1.2) both in clause 8 and in the appropriate clause for their device type.

7.1.1 Reserved

Reserved bits, fields, bytes, and code values are set aside for future standardization. Their use and interpretation may be specified by future extensions to this International Standard. A reserved bit, field, or byte shall be set to zero, or in accordance with a future extension to this International Standard. A target that receives a reserved bit, field, or byte that is not zero or receives a reserved code value shall terminate the command with CHECK CONDITION status and the sense key shall be set to ILLEGAL REQUEST. It shall also be acceptable for a target to interpret a bit, field, byte, or code value in accordance with a future extension to this International Standard.

7.1.2 Operation code types

The operation code types are defined in table 20.

Table 20 - Operation code type

Operation code type	Description
M	Mandatory - Commands so designated shall be implemented in order to meet the minimum requirement of this International Standard.
O	Optional - Commands so designated, if implemented, shall be implemented as defined in this International Standard.
V	Vendor-specific - Operation codes so designated are available for vendor defined commands. See the vendor specifications where compatibility is desired.
R	Reserved - Operation codes so designated shall not be used. They are reserved for future extensions to this International Standard.

Copyright International Organization for Standardization
Provided by IHS under license with ISO
No reproduction or networking permitted without license from IHS Not for Resale

7.2 Command descriptor block

A command is communicated by sending a command descriptor block to the target. For several commands, the command descriptor block is accompanied by a list of parameters sent during the DATA OUT phase. See the specific commands for detailed information.

The command descriptor block always has an operation code as its first byte and a control byte as its last byte.

For all commands, if there is an invalid parameter in the command descriptor block, then the target shall terminate the command without altering the medium.

Table 21 - Typical command descriptor block for six-byte commands

Bit / Byte	7	6	5	4	3	2	1	0
0	Operation code							
1	Logical unit number			(MSB)				
2	Logical block address (if required)							
3								(LSB)
4	Transfer length (if required) Parameter list length (if required) Allocation length (if required)							
5	Control							

Table 22 - Typical command descriptor block for ten-byte commands

Bit / Byte	7	6	5	4	3	2	1	0
0	Operation code							
1	Logical unit number			Reserved				
2	(MSB)							
3								
4				Logical block address (if required)				
5								(LSB)
6	Reserved							
7	(MSB)			Transfer length (if required) Parameter list length (if required)				
8				Allocation length (if required)				(LSB)
9	Control							

Copyright International Organization for Standardization
Provided by IHS under license with ISO
No reproduction or networking permitted without license from IHS Not for Resale

Table 23 - Typical command descriptor block for twelve-byte commands

Bit / Byte	7	6	5	4	3	2	1	0
0	Operation code							
1	Logical unit number			Reserved				
2	(MSB)							
3				Logical block address (if required)				
4								
5								(LSB)
6	(MSB)							
7				Transfer length (if required) Parameter list length (if required) Allocation length (if required)				
8								
9								(LSB)
10	Reserved							
11	Control							

7.2.1 Operation code

The operation code (see table 24) of the command descriptor block has a group code field and a command code field. The three-bit group code field provides for eight groups of command codes. The five-bit command code field provides for thirty-two command codes in each group. Thus, a total of 256 possible operation codes exist. Operation codes are defined in the subsequent subclauses.

The group code specifies one of the following groups:

a) Group 0 - six-byte commands (see table 21)
b) Group 1 - ten-byte commands (see table 22)
c) Group 2 - ten-byte commands (see table 22)
d) Group 3 - reserved
e) Group 4 - reserved
f) Group 5 - twelve-byte commands (see table 23)
g) Group 6 - vendor-specific
h) Group 7 - vendor-specific

Copyright International Organization for Standardization
Provided by IHS under license with ISO
No reproduction or networking permitted without license from IHS Not for Resale

Table 24 - Operation code

Bit	7	6	5	4	3	2	1	0
	Group code			Command code				

7.2.2 Logical unit number

The logical unit number is defined in the IDENTIFY message (6.6.7). The target shall ignore the logical unit number specified within the command descriptor block if an IDENTIFY message was received. It is recommended that the logical unit number in the command descriptor block be set to zero.

NOTICE: The logical unit number field is included in the command descriptor block for compatibility with some SCSI-1 devices. This field may be reclaimed in SCSI-3. New implementations should use the outbound IDENTIFY message, which is mandatory in SCSI-2, to establish the I_T_L nexus.

7.2.3 Logical block address

The logical block address on logical units or within a partition on device volumes shall begin with block zero and be contiguous up to the last logical block on that logical unit or within that partition.

A six-byte command descriptor block contains a 21-bit logical block address. The ten-byte and the twelve-byte command descriptor blocks contain 32-bit logical block addresses. Logical block addresses in additional parameter data have their length specified for each occurrence. See the specific command descriptions.

7.2.4 Transfer length

The transfer length field specifies the amount of data to be transferred, usually the number of blocks. For several commands the transfer length indicates the requested number of bytes to be sent as defined in the command description. For these commands the transfer length field may be identified by a different name. See the following descriptions and the individual command descriptions for further information.

Commands that use one byte for the transfer length allow up to 256 blocks of data to be transferred by one command. A transfer length value of 1 to 255 indicates the number of blocks that shall be transferred. A value of zero indicates 256 blocks.

In commands that use multiple bytes for the transfer length, a transfer length of zero indicates that no data transfer shall take place. A value of one or greater indicates the number of blocks that shall be transferred.

Refer to the specific command description for further information.

7.2.5 Parameter list length

The parameter list length is used to specify the number of bytes sent during the DATA OUT phase. This field is typically used in command descriptor blocks for parameters that are sent to a target (e.g. mode parameters, diagnostic parameters, log parameters, etc.). A parameter length of zero indicates that no data shall be transferred. This condition shall not be considered as an error.

7.2.6 Allocation length

The allocation length field specifies the maximum number of bytes that an initiator has allocated for returned data. An allocation length of zero indicates that no data shall be transferred. This condition shall not be considered as an error. The target shall terminate the DATA IN phase when allocation length bytes have been transferred or when all available data have been transferred to the initiator, whichever is less. The allocation length is used to limit the maximum amount of data (e.g. sense data, mode data, log data, diagnostic data, etc.) returned to an initiator.

Copyright International Organization for Standardization
Provided by IHS under license with ISO
No reproduction or networking permitted without license from IHS Not for Resale

7.2.7 Control field

The control field is the last byte of every command descriptor block. The control field is defined in table 25.

Table 25 - Control field

Bit	7	6	5	4	3	2	1	0
	Vendor-specific		Reserved				Flag	Link

The flag bit specifies which message the target shall return to the initiator if the link bit is one and the command completes without error. Implementation of the flag bit is optional.

The flag bit should be set to zero if the link bit is zero. If link bit is zero and the flag bit is one, the target shall return CHECK CONDITION status. The sense key shall be set to ILLEGAL REQUEST.

If the flag bit is zero and the link bit is one, and if the command completes successfully, the target shall send the LINKED COMMAND COMPLETE message. If the flag bit is one and the link bit is one, and if the command completes successfully, the target shall send the LINKED COMMAND COMPLETE (WITH FLAG) message.

NOTE 46 The flag bit is typically used to cause an interrupt in the initiator between linked commands.

The link bit is used to continue the I/O process across multiple commands. Implementation of the link bit is optional.

A link bit of one indicates that the initiator requests a continuation of the I/O process and that the target should enter the command phase upon successful completion of the current command.

If the link bit is one, and if the command completes successfully, the target shall return INTERMEDIATE or INTERMEDIATE-CONDITION MET status and shall then send one of the two messages defined by the flag bit.

If either of the link and flag bits are set to one, and the target does not implement linked commands, it shall return CHECK CONDITION status. The sense key shall be set to ILLEGAL REQUEST.

7.3 Status

The status byte and status byte code are defined in tables 26 and 27. A status byte shall be sent from the target to the initiator during the STATUS phase at the completion of each command unless the command is terminated by one of the following events:

a) an ABORT message;
b) an ABORT TAG message;
c) a BUS DEVICE RESET message;
d) a CLEAR QUEUE message;
e) a hard reset condition;
f) an unexpected disconnect (see 6.1.1).

The STATUS phase normally occurs at the end of a command but in some cases may occur prior to transferring the command descriptor block.

Table 26 - Status byte

Bit	7	6	5	4	3	2	1	0
	Reserved		Status byte code					Reserved

--`,,```,,,,````-`-`,,`,,`,`,,`---

Copyright International Organization for Standardization
Provided by IHS under license with ISO
No reproduction or networking permitted without license from IHS Not for Resale

Table 27 - Status byte code

Bits of status byte								Status
7	6	5	4	3	2	1	0	
R	R	0	0	0	0	0	R	GOOD
R	R	0	0	0	0	1	R	CHECK CONDITION
R	R	0	0	0	1	0	R	CONDITION MET
R	R	0	0	1	0	0	R	BUSY
R	R	0	1	0	0	0	R	INTERMEDIATE
R	R	0	1	0	1	0	R	INTERMEDIATE-CONDITION MET
R	R	0	1	1	0	0	R	RESERVATION CONFLICT
R	R	1	0	0	0	1	R	COMMAND TERMINATED
R	R	1	0	1	0	0	R	QUEUE FULL
All other codes								Reserved
Key: R = Reserved bit								

A definition of the status byte codes is given below.

7.3.1 GOOD: This status indicates that the target has successfully completed the command.

7.3.2 CHECK CONDITION: This status indicates that a contingent allegiance condition has occurred (see 7.6).

7.3.3 CONDITION MET: This status or INTERMEDIATE-CONDITION MET is returned whenever the requested operation is satisfied (see the SEARCH DATA and PREFETCH commands).

7.3.4 BUSY: This status indicates that the target is busy. This status shall be returned whenever a target is unable to accept a command from an otherwise acceptable initiator (i.e. no reservation conflicts). The recommended initiator recovery action is to issue the command again at a later time.

7.3.5 INTERMEDIATE: This status or INTERMEDIATE-CONDITION MET shall be returned for every successfully completed command in a series of linked commands (except the last command), unless the command is terminated with CHECK CONDITION, RESERVATION CONFLICT, or COMMAND TERMINATED status. If INTERMEDIATE or INTERMEDIATE-CONDITION MET status is not returned, the series of linked commands is terminated and the I/O process is ended.

7.3.6 INTERMEDIATE-CONDITION MET: This status is the combination of the CONDITION MET and INTERMEDIATE statuses.

7.3.7 RESERVATION CONFLICT: This status shall be returned whenever an initiator attempts to access a logical unit or an extent within a logical unit that is reserved with a conflicting reservation type for another SCSI device (see the RESERVE and RESERVE UNIT commands). The recommended initiator recovery action is to issue the command again at a later time.

7.3.8 COMMAND TERMINATED: This status shall be returned whenever the target terminates the current I/O process after receiving a TERMINATE I/O PROCESS message (see 6.6.22). This status also indicates that a contingent allegiance condition has occurred (see 7.6).

7.3.9 QUEUE FULL: This status shall be implemented if tagged queuing is implemented. This status is returned when a SIMPLE QUEUE TAG, ORDERED QUEUE TAG, or HEAD OF QUEUE TAG message is received and the command queue is full. The I/O process is not placed in the command queue.

Copyright International Organization for Standardization
Provided by IHS under license with ISO
No reproduction or networking permitted without license from IHS Not for Resale

7.4 Command examples

The following subclauses give examples of typical command processing in the SCSI environment.

7.4.1 Single command example

An I/O process containing one untagged READ command is used in this clause to illustrate a simple I/O process on the SCSI bus. This example does not include error or exception conditions.

The initiator has one set of active pointers that includes a command pointer, a data pointer, and a status pointer. In addition, the initiator has one set of saved pointers for each I/O process that it is able to concurrently manage. The initiator sets up the saved pointers to point to the appropriate bytes for the I/O process and copies the saved pointers to the active pointers. It then arbitrates for the SCSI bus, and upon winning arbitration, selects the target. Once the target is selected, the target assumes control of the I/O process.

During the SELECTION phase, the initiator asserts the ATN signal to inform the target that the initiator wishes to send a message. The target enters the MESSAGE OUT phase and transfers the IDENTIFY message from the initiator. This message informs the target of which logical unit is to be used. At this point, an I_T_L nexus has been established for the I/O process. This nexus associates the initiator's pointers with the I/O process.

The target switches to the COMMAND phase and transfers the command descriptor block from the initiator. In this case, the command descriptor block contains a READ command. The target interprets the command and switches to the DATA IN phase, transfers the data, switches to STATUS phase, sends GOOD status, switches to MESSAGE IN phase, and transfers a COMMAND COMPLETE message. After successfully sending the COMMAND COMPLETE message, the target goes to the BUS FREE phase by releasing the BSY signal and the I/O process ends.

7.4.2 Disconnect example

In the above single command example, the length of time necessary to obtain the data may require a time-consuming physical positioning operation. In order to improve system throughput, the target may disconnect from the initiator, thereby freeing the SCSI bus to allow other I/O process to occur.

After the target has received the READ command (and has determined that there will be a delay), it disconnects from the SCSI bus by sending a DISCONNECT message and by going to the BUS FREE phase.

After the target retrieves the requested data from the peripheral device it arbitrates for the SCSI bus. Upon winning arbitration, it reselects the initiator and sends an IDENTIFY message to the initiator via the MESSAGE IN phase. This revives the I_T_L nexus so that the initiator can retrieve the correct set of pointers for the I/O process. The initiator restores the active pointers to their most recent saved values (which, in this case, are the initial values) and the target continues (as in the single command example) to finish the I/O process.

If target wishes to disconnect after transferring part of the data (e.g. while crossing a cylinder boundary), it may do so by sending a SAVE DATA POINTER message and a DISCONNECT message to the initiator and then disconnecting. When reconnection is completed, the current data pointer is restored to its value immediately prior to the SAVE DATA POINTER message.

On those occasions when an error or exception condition occurs and the target elects to repeat the information transfer, the target may repeat the transfer by either issuing a RESTORE POINTERS message or by disconnecting without issuing a SAVE DATA POINTER message. When reconnection is completed, the most recent saved pointer values are restored.

Copyright International Organization for Standardization
Provided by IHS under license with ISO
No reproduction or networking permitted without license from IHS Not for Resale

7.4.3 Linked command example

An I/O process may contain multiple commands linked together. Upon completing a linked command successfully, the target automatically proceeds to the next linked command for the I/O process. All commands in a series of linked commands are addressed to the same nexus and are part of a single I/O process.

The commands are not entirely independent. When using the relative address bit (see 9.1.11), the address of the last logical block accessed by one of the commands is available to the next command. Thus one can search for a particular data pattern using a SEARCH DATA command and then read the logical block containing the data pattern with a READ command linked to the SEARCH DATA command. One can also read a logical block at a specified displacement from the block containing the data pattern.

A LINKED COMMAND COMPLETE or LINKED COMMAND COMPLETE (WITH FLAG) message is sent from the target to the initiator to indicate that a linked command completed. The initiator then updates the saved pointers for the nexus so that subsequent transfers from the target reference the next command of the series. Command processing of linked and single commands is similar except that relative addressing is permitted in linked commands.

For example, a successful completion of a SEARCH DATA EQUAL command causes the target to continue with the linked READ command from the initiator. If the relative address bit in the READ command has been set to one, and the address field of the READ command is set to zero, the target transfers the successfully searched block to the initiator.

7.5 Command processing considerations and exception conditions

The following subclauses describe some exception conditions and errors associated with command processing and the sequencing of commands.

7.5.1 Programmable operating definition

Some applications require that the operating definition of a logical unit be modified to meet the special requirements of a particular initiator. The program-controlled modification of the operating definition is typically provided to allow operating systems to change the operating definition of a more recently developed target to one that is more compatible with the operating system. This ability requires that the system comply with the low-level hardware definitions of SCSI-2.

The parameters that can be changed by modifying the operating definition of a logical unit include the vendor identification, the device type, the device model, the SCSI compliance level, the SCSI specification level, the command set, and other parameters. The low-level hardware parameters including signal timing and parity definitions cannot be changed by modifying the operating definition. The present operating definition of a logical unit with respect to an initiator can be determined at any time by execution of an INQUIRY command. In some vendor-specific cases, it may also be necessary to perform other commands including MODE SENSE and READ CAPACITY.

Each logical unit begins with a particular operating definition. If the logical unit supports the CHANGE DEFINITION command, the present operating definition can be changed to any other operating definition supported by the logical unit. The actual details of the operating definition of a logical unit are vendor-specific. If the operating definition is changed to one that does not include the CHANGE DEFINITION command, the target should continue to accept the CHANGE DEFINITION command.

If an error occurs during execution of a CHANGE DEFINITION command, the original operating definition remains in effect after the command is executed. The new operating definition becomes active only after successful execution of the CHANGE DEFINITION command.

Since new operating definitions may preclude the execution of I/O processes that are already in progress, the target may disconnect to allow completion of any I/O processes that are in progress. Operating definition changes that may cause conflicts with the normal operation from other initiators shall be indicated to those initiators by generating a

Copyright International Organization for Standardization
Provided by IHS under license with ISO
No reproduction or networking permitted without license from IHS Not for Resale

unit attention condition for each other initiator. The additional sense code shall be set to CHANGED OPERATING DEFINITION.

An initiator may request a list of the operating definitions that the target supports and descriptive text for each operating definition using the INQUIRY command.

7.5.2 Incorrect initiator connection

An incorrect initiator connection occurs on a reconnection if:

a) an initiator attempts to reconnect to an I/O process, and
b) a soft reset condition has not occurred, and
c) the initiator does not send an ABORT, ABORT TAG, BUS DEVICE RESET, CLEAR QUEUE, or TERMINATE I/O PROCESS message during the same MESSAGE OUT phase as the IDENTIFY message.

An incorrect initiator connection also occurs on an initial connection when an initiator:

a) attempts to establish an I_T_L_Q nexus when an I_T_L nexus already exists from a previous connection, or
b) attempts to establish an I_T_L nexus when an I_T_L_Q nexus already exists, unless there is a contingent allegiance or extended contingent allegiance condition present for the logical unit.

A target that detects an incorrect initiator connection shall abort all I/O processes for the initiator on the logical unit or target routine and shall return CHECK CONDITION status. The sense key shall be set to ABORTED COMMAND and the additional sense code shall be set to OVERLAPPED COMMANDS ATTEMPTED.

If an initiator reconnects to an I/O process and a soft reset condition has occurred, the target shall meet the requirements of 6.2.2.2.

NOTES

47 An incorrect initiator connection may be indicative of a serious error and, if not detected, could result in an I/O process operating with a wrong set of pointers. This is considered a catastrophic failure on the part of the initiator. Therefore, vendor-specific error recovery procedures may be required to guarantee the data integrity on the medium. The target may return additional sense data to aid in this error recovery procedure (e.g. sequential-access devices may return the residue of blocks remaining to be written or read at the time the second command was received).

48 Some targets may not detect an incorrect initiator connection until after the command descriptor block has been received.

7.5.3 Selection of an invalid logical unit

The target's response to selection of a logical unit that is not valid is described in the following paragraphs.

The logical unit may not be valid because:

a) the target does not support the logical unit (e.g. some targets support only one peripheral device). In response to an INQUIRY command, the target shall return the INQUIRY data with the peripheral qualifier set to the value required in 8.2.5.1. In response to any other command except REQUEST SENSE, the target shall terminate the command with CHECK CONDITION status. In response to a REQUEST SENSE command, the target shall return sense data. The sense key shall be set to ILLEGAL REQUEST and the additional sense code shall be set to LOGICAL UNIT NOT SUPPORTED.
b) the target supports the logical unit, but the peripheral device is not currently attached to the target. In response to an INQUIRY command, the target shall return the INQUIRY data with the peripheral qualifier set to the value required in 8.2.5.1. In response to any other command except REQUEST SENSE, the target shall terminate the command with CHECK CONDITION status. In response to a REQUEST SENSE command, the target shall return sense data. The sense key shall be set to ILLEGAL REQUEST and the additional sense code shall be set to LOGICAL UNIT NOT SUPPORTED.
c) the target supports the logical unit and the peripheral device is attached, but not operational. In response to an INQUIRY command, the target shall return the INQUIRY data with the peripheral qualifier set to the value required in 8.2.5.1. The target's response to any command other than INQUIRY and REQUEST SENSE is vendor-specific.

Copyright International Organization for Standardization
Provided by IHS under license with ISO
No reproduction or networking permitted without license from IHS Not for Resale

d) the target supports the logical unit but is incapable of determining if the peripheral device is attached or is not operational when it is not ready. In response to an INQUIRY command,the target shall return the INQUIRY data with the peripheral qualifier set to the value required in 8.2.5.1. In response to a REQUEST SENSE command, the target shall return the REQUEST SENSE data with a sense key of NO SENSE unless a contingent allegiance exists. The target's response to any other command is vendor-specific.

7.5.4 Parameter rounding

Certain parameters sent to a target with various commands contain a range of values. Targets may choose to implement only selected values from this range. When the target receives a value that it does not support, it either rejects the command (CHECK CONDITION status with ILLEGAL REQUEST sense key) or it rounds the value received to a supported value. The target shall reject unsupported values unless rounding is permitted in the description of the parameter.

Rounding of parameter values, when permitted, shall be performed as follows - A target that receives a parameter value that is not an exact supported value shall adjust the value to one that it supports and shall return CHECK CONDITION status with a sense key of RECOVERED ERROR. The additional sense code shall be set to ROUNDED PARAMETER. The initiator is responsible to issue an appropriate command to learn what value the target has selected.

NOTE 49 Generally, the target should adjust maximum-value fields down to the next lower supported value than the one specified by the initiator. Minimum-value fields should be rounded up to the next higher supported value than the one specified by the initiator. In some cases, the type of rounding (up or down) is explicitly specified in the description of the parameter.

7.5.5 Asynchronous event notification

Implementation of asynchronous event notification is optional. This protocol can be used to inform processor devices that an asynchronous event has occurred. A SEND command with an AEN bit of one is issued to a processor device with a subsequent data phase that includes the REQUEST SENSE information. SCSI devices that respond to an INQUIRY command as a processor device type with asynchronous event notification capability may be notified of asynchronous events using this protocol. An SCSI device has to be capable of acting as an initiator in order to perform asynchronous event notification.

NOTE 50 Asynchronous event notification cannot be used with a device that acts as a temporary initiator (e.g. devices executing COPY commands) since they are not identified as a processor device.

Parameters affecting the use of asynchronous event notification are contained in the control mode page (see 8.3.3.1).

The four uses of asynchronous event notification are:

a) informing a processor of an error condition encountered after command completion;
b) informing all processor devices that a newly initialized device is available;
c) informing all processor devices of other unit attention conditions;
d) informing all processor devices of other asynchronous events.

An example of the first case above is a device that implements a write cache. If the target is unable to write cached data to the medium, it may use an asynchronous event notification to inform the initiator of the failure. An extended contingent allegiance condition may also be established during the same I_T_L nexus used for the asynchronous event notification (see 6.6.9).

An example of the third case above is a device that supports removable media. Asynchronous event notification may be used to inform an initiator of a not-ready-to-ready transition (medium changed) or of an operator initiated event (e.g. activating a write protect switch or activating a start or stop switch).

An example of the fourth case above is a sequential-access device performing a REWIND command with the immediate bit set to one. Asynchronous event notification may be used to inform an initiator that the beginning of

Copyright International Organization for Standardization
Provided by IHS under license with ISO
No reproduction or networking permitted without license from IHS Not for Resale

medium has been reached. Completion of a CD-ROM AUDIO PLAY command started in the immediate mode is another example of this case.

Notification of an asynchronous event is performed using the SEND command with the AEN bit set to one. The information identifying the condition being reported shall be returned during the DATA OUT phase of the SEND command. See 12.2.2 for further information on the format of the data sent.

An error condition or unit attention condition shall be reported once per occurrence of the event causing it. The target may choose to use an asynchronous event notification or to return CHECK CONDITION status on a subsequent command, but not both. Notification of command-related error conditions shall be sent only to the processor that initiated the I/O process.

The asynchronous event notification protocol can be used to notify processor devices that a system resource has become available. If a target chooses to use this method, the sense key in the sense data sent to the processor device shall be set to UNIT ATTENTION.

The asynchronous event notification protocol shall be sent only to SCSI devices that return processor device type with an AENC bit of one in response to an INQUIRY command. The INQUIRY command should be issued to logical unit zero of each SCSI device responding to selection. This procedure shall be conducted prior to the first asynchronous event notification and shall be repeated whenever the device deems it appropriate or when an event occurs that may invalidate the current information. (See 6.6.21, SYNCHRONOUS DATA TRANSFER REQUEST message, for examples of these events.)

Each SCSI device that returns processor device type with an AENC bit of one shall be issued a TEST UNIT READY command to determine that the SCSI device is ready to receive an asynchronous event notification. An SCSI device returning CHECK CONDITION status is issued a REQUEST SENSE command. This clears any pending unit attention condition. An SCSI device that returns processor device type with an AENC bit of one and returns GOOD status when issued a TEST UNIT READY command shall accept a SEND command with an AEN bit of one.

NOTE 51 An SCSI device which can use asynchronous event notification at initialization time should provide means to defeat these notifications. This can be done with a switch or jumper wire. Devices that implement saved parameters may alternatively save the asynchronous event notification permissions either on a per SCSI device basis or as a system-wide option. In any case, a device conducts a survey with INQUIRY commands to be sure that the devices on the SCSI bus are appropriate destinations for SEND commands with an AEN bit of one. (The devices on the bus or the SCSI ID assignments may have changed.)

7.5.6 Unexpected reselection

An unexpected reselection occurs if an SCSI device attempts to reconnect to an I/O process for which a nexus does not exist. An SCSI device should respond to an unexpected reselection by sending an ABORT message.

Copyright International Organization for Standardization
Provided by IHS under license with ISO
No reproduction or networking permitted without license from IHS Not for Resale

7.6 Contingent allegiance condition

The contingent allegiance condition shall exist following the return of CHECK CONDITION or COMMAND TERMINATED status. The contingent allegiance condition shall be preserved for the I_T_x nexus until it is cleared. The contingent allegiance condition shall be cleared upon the generation of a hard reset condition, or by an ABORT message, a BUS DEVICE RESET message, or any subsequent command for the I_T_x nexus. While the contingent allegiance condition exists the target shall preserve the sense data for the initiator.

While the contingent allegiance condition exists, if the target is unable to maintain separate sense data, the target shall respond to any other requests for access to the logical unit or target routine from another initiator with a BUSY status. Execution of all tagged I/O processes for the I_T_L nexus for which the contingent allegiance condition exists shall be suspended until the contingent allegiance condition is cleared.

7.7 Extended contingent allegiance condition

Implementation of extended contingent allegiance is optional. The extended contingent allegiance condition extends the contingent allegiance condition for an I_T_x nexus. This condition is generated by the target sending an INITIATE RECOVERY message to the initiator following CHECK CONDITION or COMMAND TERMINATED status and prior to the COMMAND COMPLETE message. This condition shall be preserved until it is cleared by a BUS DEVICE RESET message, a RELEASE RECOVERY message, or a hard reset condition.

While the extended contingent allegiance condition exists, the target shall respond to any other request for access to the logical unit from another initiator with BUSY status. Execution of all I/O processes for the logical unit for which the extended contingent allegiance condition exists shall be suspended until the RELEASE RECOVERY message is received by the target.

NOTES

52 It is not required to generate an extended contingent allegiance condition for every CHECK CONDITION or COMMAND TERMINATED status that occurs. Simple errors not requiring an extended recovery may be dealt with by using the contingent allegiance protocol.

53 During the existence of the extended contingent allegiance condition, appropriate error recovery sequences may be executed. Such commands can correct data, modify or delete queued commands, perform LOG SENSE commands and obtain diagnostic information. Extended contingent allegiance is recommended for error conditions that may require execution of multiple-step error-recovery protocols without interference from other initiators.

An extended contingent allegiance condition may also be generated using an asynchronous event notification protocol. When the event is detected, the bus device that detected the event assumes the initiator role and transmits a SEND command with an AEN bit of one to the appropriate device(s) (see 12.2.2).

If the device wishes to generate an extended contingent allegiance condition during an asynchronous event notification, it shall send an INITIATE RECOVERY message following the IDENTIFY message (and following any queue tag message) and prior to the COMMAND phase of the SEND command. An extended contingent allegiance condition can be generated for only one I_T_L nexus at a time. The extended contingent allegiance condition is cleared when a RELEASE RECOVERY message is received from the device to which the INITIATE RECOVERY message was sent. The generation of a hard reset condition, or receipt of a BUS DEVICE RESET message, shall also clear the extended contingent allegiance condition.

During an extended contingent allegiance, only untagged I/O processes from the SCSI device to which the INITIATE RECOVERY message was sent shall be executed by the target for the logical unit. If the initiator sends a queue tag message, the target shall respond with QUEUE FULL status. After the extended contingent allegiance condition is cleared, any commands remaining in the command queue shall be executed.

Copyright International Organization for Standardization
Provided by IHS under license with ISO
No reproduction or networking permitted without license from IHS Not for Resale

7.8 Queued I/O processes

The implementation of queuing for I/O processes is optional. Queuing of I/O processes allows a target to accept multiple I/O processes.

There are two methods for implementation of queuing, tagged and untagged. Tagged queuing allows a target to accept multiple I/O processes from each initiator for each logical unit. Untagged queuing allows a target to accept one I/O process from each initiator for each logical unit or target routine. Untagged queuing may be supported by SCSI-1 or SCSI-2 devices. Tagged queuing is new in SCSI-2.

A target may support both tagged and untagged queuing. An initiator may not mix the use of tagged and untagged queuing for I/O processes to a logical unit, except during a contingent allegiance or extended contingent allegiance condition when only untagged initial connections are allowed. An initiator that elects to use tagged queuing does not preclude another initiator on the same SCSI bus from using untagged queuing.

7.8.1 Untagged queuing

Untagged queuing allows a target to accept a command from an initiator for a logical unit or target routine while I/O processes from other initiators are being executed. Only one command for each I_T_x nexus shall be accepted at a time.

An I/O process may be initiated any time the BUS FREE phase exists, even if an I/O process from a different initiator is active. If the disconnect privilege is not granted in the IDENTIFY message of the current I/O process, the target may either suspend all other I/O processes or it may return BUSY status to the current I/O process.

The I_T_x nexus sufficiently specifies the relationship so that the target can reconnect to the initiator to restore the pointers for I/O process as long as only one I/O process per I_T_x nexus is issued. It is the responsibility of the initiator to assure that only one such I/O process is issued at any time (see 7.5.2).

7.8.2 Tagged queuing

Tagged queuing allows a target to accept multiple I/O processes from the same or different initiators until the logical unit's command queue is full. If an I/O process is received and the command queue is full, the target shall terminate the I/O process with QUEUE FULL status.

The command queue is setup by the target for each supported logical unit. Initiators may add or delete I/O processes to the queue. When adding an I/O process, the initiator may specify fixed order of execution, allow the target to define the order of execution, or specify that the I/O process is to be executed next.

If the disconnect privilege is not granted in the IDENTIFY message for a tagged I/O process, the target shall return BUSY status.

The queue tag messages (see 6.6.17) allow the initiator to establish a unique I_T_L_Q nexus to identify each I/O process. The I_T_L_Q nexus allows the target to reconnect to a specific I/O process, and allows the initiator to restore the set of pointers for that I/O process. An initiator may have several I/O processes ongoing to the same or different logical units as long as each has a unique nexus.

If only SIMPLE QUEUE TAG messages are used, the target may execute the commands in any order that is deemed desirable within the constraints of the queue management algorithm specified in the control mode page (see 8.3.3.1).

If ORDERED QUEUE TAG messages are used, the target shall execute the commands in the order received with respect to other commands received with ORDERED QUEUE TAG messages. All commands received with a SIMPLE QUEUE TAG message prior to a command received with an ORDERED QUEUE TAG message, regardless of initiator, shall be executed before that command with the ORDERED QUEUE TAG message. All commands received with a SIMPLE QUEUE TAG message after a command received with an ORDERED QUEUE TAG message, regardless of initiator, shall be executed after that command with the ORDERED QUEUE TAG message.

Copyright International Organization for Standardization
Provided by IHS under license with ISO
No reproduction or networking permitted without license from IHS Not for Resale

A command received with a HEAD OF QUEUE TAG message is placed first in the queue, to be executed next. A command received with a HEAD OF QUEUE TAG message shall be executed prior to any queued I/O process. Consecutive commands received with HEAD OF QUEUE TAG messages are executed in a last-in-first-out order.

An I/O process received without a queue tag message, while there are any tagged I/O commands in the command queue from the same initiator, is an incorrect initiator connection (see 7.5.2), unless there is a contingent allegiance or extended contingent allegiance condition.

A series of linked commands constitute a single I/O process. These commands are assigned the queue tag established in the initial connection. A command received with a HEAD OF QUEUE TAG message shall not suspend a series of linked commands for which the target has begun execution.

The RESERVE and RELEASE commands should be sent with an ORDERED QUEUE TAG message. Use of the HEAD OF QUEUE TAG message with these commands could result in reservation conflicts with previously issued commands.

NOTE 54 Initiators should not issue another I/O processes following a reservation request until that request is honoured by the target. This prevents possible sequencing errors or file system corruption.

There are two methods of dealing with the command queue following a contingent allegiance condition. The method used is specified in the control mode page by the queue error management bit (see 8.3.3.1).

The first method allows the execution of tagged I/O processes to resume when the contingent allegiance or extended contingent allegiance condition is cleared. The target returns BUSY status to other initiators while the contingent allegiance or extended contingent allegiance condition exists. During this time, all tagged I/O processes are suspended. All I/O processes used for recovery operations shall be untagged. The queue may be modified by removing all or selected I/O processes from the queue as part of the recovery procedure.

If commands are combined by the queuing algorithm such that the exception condition affects more than one command, then a contingent allegiance condition shall be generated for all affected commands.

The second method aborts all I/O processes when the contingent allegiance or extended contingent allegiance condition is cleared. A unit attention condition shall be generated for all other initiators and the additional sense code shall be set to COMMANDS CLEARED BY ANOTHER INITIATOR.

A device that does not support tagged I/O processes (e.g. not implemented, disabled by the Dque bit in the control mode page, or switched to an operating definition that does not include tagged I/O processes) it shall respond to any queue tag message with a MESSAGE REJECT message. The target shall continue the I/O process as if it were an untagged I/O process.

Tagged queuing may also be temporarily disabled during certain initialization periods or to control internal resource utilization. During these periods the target may return QUEUE FULL status or it may respond to any queue tag message with a MESSAGE REJECT message.

Several messages may be used to clear part or all of the command queue. Please refer to the ABORT, ABORT TAG, BUS DEVICE RESET, and CLEAR QUEUE messages in clause 6 for details.

7.8.3 Example of queued I/O process

This example of queuing I/O processes illustrates the execution of a number of commands. After each command, the state of the queue kept in the target is shown to indicate the function actually performed by the queuing.

Copyright International Organization for Standardization
Provided by IHS under license with ISO
No reproduction or networking permitted without license from IHS Not for Resale

7.8.3.1 Typical sequences for tagged queuing

An I/O process using tagged queuing uses the following sequences for normal execution. The initiator first arbitrates for the SCSI bus, and after successfully obtaining the SCSI bus, selects the appropriate SCSI device. The ATN signal is asserted during the SELECTION phase to indicate that a MESSAGE OUT phase is requested by the initiator. The first message byte transferred is an IDENTIFY message. The ATN signal continues to be asserted during the MESSAGE OUT phase to indicate that the initiator has another message. The second message byte transferred is the first byte of the appropriate queue tag message, in this case a SIMPLE QUEUE TAG message. The third and last message byte is transmitted containing the second byte of the queue tag message, the queue tag. As it is transferred, the ATN signal is negated to indicate that no more message bytes are available. The target then transfers the command descriptor block. Assuming the command requires disconnection, the target transmits a DISCONNECT message to the initiator and then enters the BUS FREE phase. The target places the command, identified by the I_T_L_Q nexus, at the appropriate place in the command queue.

When the target removes I/O processes from the queue for execution, a physical latency period may occur. At the end of this period, when the target is prepared to transfer the appropriate data, the target begins an ARBITRATION phase and, upon winning, enters a RESELECTION phase. After a successful reselection, the target sends the IDENTIFY message followed by a SIMPLE QUEUE TAG message with the queue tag value originally sent by the initiator. The initiator uses the I_T_L_Q nexus to identify the correct set of pointers and control blocks associated with the I/O process and to establish the necessary conditions for data transfer. The target begins data transfer. When the data transfer is successfully completed, the target returns GOOD status and terminates the I/O process with a COMMAND COMPLETE message.

7.8.3.2 Example of tagged queuing

An example of the execution of five queued I/O processes is described to demonstrate how tagged queuing operates. All tagged I/O processes are from one initiator to a single logical unit of a single target. The five I/O processes are defined in table 28. The target is a direct-access device. At the time the I/O processes are first being executed, it is assumed that the actuator is in position to access logical block 10 000.

Table 28 - Commands in order received by target

Command	Queue tag message	Queue tag value	Logical block address	Transfer length	Status
READ	SIMPLE	01h	10 000	1 000	Queued
READ	SIMPLE	02h	100	1	Queued
READ	ORDERED	03h	1 000	1 000	Queued
READ	SIMPLE	04h	10 000	1	Queued
READ	SIMPLE	05h	2 000	1 000	Queued

The optimum order would require that those blocks close to the actuator position be the first blocks accessed, followed by those increasingly far from the actuator position. However, the command with queue tag 03h is an ordered I/O process, so that all simple I/O processes transferred previously must be executed before, while all simple I/O processes transferred after the ordered I/O process must be executed after the ordered I/O process.

If a target supports an optimizing algorithm the actual order in which the I/O processes are executed could be as shown in table 29.

Copyright International Organization for Standardization
Provided by IHS under license with ISO
No reproduction or networking permitted without license from IHS Not for Resale

Table 29 - Commands in order of execution

Command	Queue tag message	Queue tag value	Logical block address	Transfer length	Status
READ	SIMPLE	01h	10 000	1 000	Queued
READ	SIMPLE	02h	100	1	Queued
READ	ORDERED	03h	1 000	1 000	Queued
READ	SIMPLE	05h	2 000	1 000	Queued
READ	SIMPLE	04h	10 000	1	Queued

I/O processes with queue tag values 01h and 02h are executed in the order received since the actuator is already in position to execute I/O process 01h. I/O process 02h must be executed before I/O process 04h or 05h because the ordered I/O process 03h was transmitted after I/O processes 01h and 02h but before I/O processes 04h and 05h. I/O process 03h is then executed after I/O process 02h. The I/O processes 04h and 05h are executed after the ordered I/O process 03h. I/O process 05h is executed before I/O process 04h because the actuator is in position to access block 2 000 after executing I/O process 03h. I/O process 04h is executed last.

As an example of the operation of the HEAD OF QUEUE TAG I/O process, consider that a new I/O process, identified by a HEAD OF QUEUE TAG message with a queue tag of 08h, is transmitted to the target while the ordered I/O process 03h is being executed. The I/O process 03h continues execution, but the new HEAD OF QUEUE TAG I/O process is placed in the queue for execution before all subsequent I/O processes. In this case, the queue for execution after the ordered I/O process 03h was executed would appear as shown in table 30.

Table 30 - Modified by HEAD OF QUEUE TAG message

Command	Queue tag message	Queue tag value	Logical block address	Transfer length	Status
READ	ORDERED	03h	1 000	1 000	Executing
READ	HEAD OF QUEUE	08h	0	8	Queued
READ	SIMPLE	05h	2 000	1 000	Queued
READ	SIMPLE	04h	10 000	1	Queued

To obtain maximum performance gains using tagged queuing requires careful implementation of the queuing algorithms in the target. In addition, initiators should allow a maximum number of simple I/O processes to be executed with a minimum number of ordered I/O processes. RESERVE and RELEASE commands, SET LIMITS commands, and appropriate software locking conventions should be used to guarantee the proper relationship between the commands executed and the data stored on the peripheral devices. These conventions are not defined by this International Standard.

Copyright International Organization for Standardization
Provided by IHS under license with ISO
No reproduction or networking permitted without license from IHS Not for Resale

7.9 Unit attention condition

The target shall generate a unit attention condition for each initiator on each valid logical unit whenever the target has been reset by a BUS DEVICE RESET message, a hard reset condition, or by a power-on reset. The target shall also generate a unit attention condition on the affected logical unit(s) for each initiator whenever one of the following events occurs:

a) A removable medium may have been changed;
b) The mode parameters in effect for this initiator have been changed by another initiator;
c) The version or level of microcode has been changed;
d) Tagged commands queued for this initiator were cleared by another initiator;
e) INQUIRY data has been changed;
f) The mode parameters in effect for the initiator have been restored from non-volatile memory;
g) A change in the condition of a synchronized spindle;
h) Any other event occurs that requires the attention of the initiator.

NOTES
55 Targets may queue unit attention conditions on logical units. After the first unit attention condition is cleared, another unit attention condition may exist (e.g. a power on condition followed by a microcode change condition).
56 See 7.5.3 for requirements concerning selection of an invalid logical unit.

The unit attention condition shall persist on the logical unit for each initiator until that initiator clears the condition as described in the following paragraphs.

If an INQUIRY command is received from an initiator to a logical unit with a pending unit attention condition (before the target generates the contingent allegiance condition), the target shall perform the INQUIRY command and shall not clear the unit attention condition. If the INQUIRY command is received after the target has generated the contingent allegiance condition for a pending unit attention condition, then the unit attention condition on the logical unit shall be cleared, and the target shall perform the INQUIRY command.

If any other command is received after the target has generated the contingent allegiance condition for a pending unit attention condition, the unit attention condition on the logical unit shall be cleared, and if no other unit attention condition is pending the target shall perform the command. If another unit attention condition is pending, the target shall not perform the command and shall generate another contingent allegiance condition.

If a REQUEST SENSE command is received from an initiator with a pending unit attention condition (before the target generates the contingent allegiance condition), then the target shall either:

a) report any pending sense data and preserve the unit attention condition on the logical unit, or,
b) report the unit attention condition, may discard any pending sense data, and clear the unit attention condition on the logical unit for that initiator.

If the target has already generated the contingent allegiance condition for the unit attention condition, the target shall perform the second action listed above.

If an initiator issues a command other than INQUIRY or REQUEST SENSE while a unit attention condition exists for that initiator (prior to generating the contingent allegiance condition for the unit attention condition), the target shall not perform the command and shall report CHECK CONDITION status unless a higher priority status as defined by the target is also pending (e.g. BUSY or RESERVATION CONFLICT).

If, after generating the contingent allegiance condition for a pending unit attention condition, the next command received from that initiator on the logical unit is not REQUEST SENSE, then that command shall be performed and the unit attention condition shall be cleared for that initiator on the logical unit and the sense data is lost (see 7.6).

If a target becomes a temporary initiator to issue a SEND command with an AEN bit of one, which informs the initiator (temporary target) of the unit attention condition, and the SEND command completes with GOOD status, then the target shall clear the unit attention condition for that initiator on the logical unit (see 7.5.5).

Copyright International Organization for Standardization
Provided by IHS under license with ISO
No reproduction or networking permitted without license from IHS Not for Resale

8 All device types

8.1 Model for all device types

This model describes some of the general characteristics expected of most SCSI devices. It is not intended to define any requirements nor is it intended to alter any requirements defined elsewhere in this International Standard. Clause 7 also contains model information pertaining to all device types.

8.1.1 SCSI addresses

There are two levels of addresses within the SCSI architecture: the SCSI device address and the logical unit number or target routine number.

8.1.1.1 SCSI device address

SCSI devices occupy (i.e. respond to) one address on the SCSI bus. Generally, the SCSI device provides a means (e.g. switches, jumpers) to select one of the eight available addresses (0 through 7). This address is used during bus arbitration and selection or reselection of SCSI devices. Each device on the SCSI bus is assigned a unique address.

Normally, the SCSI device address is set when the system is configured and it remains static thereafter. Some systems and devices provide vendor-specific means to alter this address at other times.

8.1.1.2 Logical units

Each target has one or more logical units, beginning with logical unit zero. There is a maximum of eight logical units. These logical units are usually mapped directly to peripheral devices, but they may be a portion of a peripheral device or may comprise multiple peripheral devices.

An initiator can determine whether a target implements a logical unit by issuing an INQUIRY command and examining the returned peripheral qualifier and peripheral device type.

The concept of a logical unit is not defined for an initiator. (An SCSI device may implement both the initiator role and the target role. In this case logical unit(s) are defined only for the target role.)

8.1.1.3 Target routines

An optional feature of the SCSI architecture permits each target to have one or more target routines, beginning with target routine number zero. There is a maximum of eight target routines. These target routines are processes that execute directly on the target and are not associated with a particular logical unit or peripheral device. Target routines are addressed using the LUNTAR bit of the IDENTIFY message (see 6.6.7).

Target routines are principally intended to return information about the target and the only valid commands are INQUIRY and REQUEST SENSE.

8.1.2 Commands implemented by all SCSI devices

This International Standard defines four commands that all SCSI-2 targets implement - INQUIRY, REQUEST SENSE, SEND DIAGNOSTIC, and TEST UNIT READY. These commands are used to configure the system, to test targets, and to return important information concerning errors and exception conditions.

Copyright International Organization for Standardization
Provided by IHS under license with ISO
No reproduction or networking permitted without license from IHS Not for Resale

8.1.2.1 Using the INQUIRY command

The INQUIRY command may be used by a system to determine the configuration of the SCSI bus. Target devices respond with information that includes their type and standard level and may include the vendor's identification, model number and other useful information. It is recommended that SCSI targets be capable of returning this information (or whatever part of it that is available) upon completing power-on initialization. An SCSI device may take longer to get certain portions of this information, especially if it retrieves the information from the medium.

8.1.2.2 Using the REQUEST SENSE command

Whenever a contingent allegiance condition (see 7.6) is established, the initiator that received the error should issue a REQUEST SENSE command to receive the sense data describing what caused the contingent allegiance condition. If the initiator issues some other command, the sense data is lost.

8.1.2.3 Using the SEND DIAGNOSTIC command

The SEND DIAGNOSTIC command provides a means to request the target to perform a self test. While the test is target specific, the means of requesting the test is standardized and the response is simply GOOD status if all is well or CHECK CONDITION status if the test fails.

The SEND DIAGNOSTIC command also provides other powerful features when used in conjunction with the RECEIVE DIAGNOSTIC RESULTS command, but this capability is optional.

8.1.2.4 Using the TEST UNIT READY command

The TEST UNIT READY command is useful in that it allows an initiator to poll a logical unit until it is ready without the need to allocate space for returned data. It is especially useful to check cartridge status of logical units with removable media. Targets are expected to respond promptly to indicate the current status of the device (i.e. a target should avoid lengthy disconnections in an attempt to respond with GOOD status).

8.2 Commands for all device types

The operation codes for commands that apply to all device types are listed in table 31.

Table 31 - Commands for all device types

Command name	Operation code	Type	Subclause
CHANGE DEFINITION	40h	O	8.2.1
COMPARE	39h	O	8.2.2
COPY	18h	O	8.2.3
COPY AND VERIFY	3Ah	O	8.2.4
INQUIRY	12h	M	8.2.5
LOG SELECT	4Ch	O	8.2.6
LOG SENSE	4Dh	O	8.2.7
MODE SELECT(6)	15h	Z	8.2.8
MODE SELECT(10)	55h	Z	8.2.9
MODE SENSE(6)	1Ah	Z	8.2.10
MODE SENSE(10)	5Ah	Z	8.2.11
READ BUFFER	3Ch	O	8.2.12
RECEIVE DIAGNOSTIC RESULTS	1Ch	O	8.2.13
REQUEST SENSE	03h	M	8.2.14
SEND DIAGNOSTIC	1Dh	M	8.2.15
TEST UNIT READY	00h	M	8.2.16
WRITE BUFFER	3Bh	O	8.2.17

Key: M = Command implementation is mandatory.
O = Command implementation is optional.
Z = Command implementation is device type specific.

Copyright International Organization for Standardization
Provided by IHS under license with ISO
No reproduction or networking permitted without license from IHS Not for Resale

8.2.1 CHANGE DEFINITION command

The CHANGE DEFINITION command (see table 32) modifies the operating definition of the selected logical unit or target with respect to commands from the selecting initiator or for all initiators.

Table 32 - CHANGE DEFINITION command

Bit / Byte	7	6	5	4	3	2	1	0
0	Operation code (40h)							
1	Logical unit number			Reserved				
2	Reserved							Save
3	Reserved	Definition parameter						
4	Reserved							
5	Reserved							
6	Reserved							
7	Reserved							
8	Parameter data length							
9	Control							

A save control bit (Save) of zero indicates that the target shall not save the operating definition. A Save bit of one indicates that the target shall save the operating definition to non-volatile memory.

The definition parameter field is defined in table 33.

Table 33 - Definition parameter field

Value	Meaning of definition parameter
00h	Use current operating definition
01h	SCSI-1 operating definition
02h	CCS operating definition
03h	SCSI-2 operating definition
04 - 3Fh	Reserved
40 - 7Fh	Vendor-specific

NOTE 57 The current operating definition parameter values establish operating definitions compatible with the appropriate SCSI specification. Vendor-specific values are available for those applications where more complex operation definition changes are required. Definitions supported by a device are returned in the implemented operating definition page (see 8.3.4.3).

The parameter data length field specifies the length in bytes of the parameter data that shall be transferred from the initiator to the target. A parameter data length of zero indicates that no data shall be transferred. This condition shall not be considered as an error. Parameter data lengths greater than zero indicate the number of bytes of parameter data that shall be transferred.

The parameter data is vendor-specific.

NOTE 58 The parameter data may be used to specify a password to validate an operating definition change.

The CHANGE DEFINITION command causes one of the operating definition modifications listed below:

Copyright International Organization for Standardization
Provided by IHS under license with ISO
No reproduction or networking permitted without license from IHS Not for Resale

a) Change the operating definition of a logical unit relative to the initiator that issued the command. In this case, the target is capable of maintaining an unique operating definition for each logical unit relative to each initiator in the system.
b) Change the operating definition of the target relative to the initiator that issued the command. In this case, the target is capable of maintaining a unique operating definition, for each initiator in the system, that applies to all logical units of the target.
c) The operating definition of a logical unit relative to all initiators in the system. In this case, the target is capable of maintaining an unique operating definition for each logical unit relative to all initiators in the system.
d) The operating definition of the target relative to all initiators in the system. In this case, the target is capable of maintaining only one operating definition.

NOTES
59 This International Standard does not provide a direct means to determine which of the above four methods has been implemented by the target. An indirect means of determining which method is implemented exists in that the target is required to inform affected initiators of operating definition changes via the unit attention condition.
60 The final two modifications listed above may result in incompatibilities if other initiators are operated below the SCSI-2 level.

The operating definition is modified after successful completion of the command. A target shall consider the command successfully completed when it detects the assertion of the ACK signal for the COMMAND COMPLETE message. The initiator should verify the new operating definition by issuing an INQUIRY command requesting the implemented operating definition page (see 8.3.4.1).

It is permissible for an SCSI-2 device that has its definition changed to an SCSI-1 device to accept a CHANGE DEFINITION command.

NOTE 61 The method of changing the operating definition is implementation dependent. Some implementations may require that the target's operating mode be reinitialized as if a power-up or hard-reset had occurred. Other implementations may modify only those operating definitions that are affected by the CHANGE DEFINITION command.

If the CHANGE DEFINITION command is not executed successfully for any reason, the operating definition shall remain the same as it was before the CHANGE DEFINITION command was attempted. If it is impossible to return to the previous operating definition, a unit attention condition shall be generated by the target.

NOTE 62 The present operating definition of the target may always be interrogated through the INQUIRY command. When an SCSI-2 target has its operating definition changed to CCS or SCSI-1, certain changes are needed to promote compatibility with preexisting SCSI-1 initiators. The recommended changes are as follows:
a) The target should not initiate selections to other SCSI devices to determine if any initiators support AEN. The target should assume that none are capable of receiving AEN and not issue an AEN.
b) The target should not generate extended contingent allegiance conditions by issuing an INITIATE RECOVERY message.
c) If a REQUEST SENSE command with an allocation length of zero is received, the target should return four bytes of sense data.
d) If an INQUIRY command is received, the returned data should have appropriate values in the ISO/IEC version field and the response data format field. The features supported bits should be zero.
e) A change in the operating definition may change the vendor identifier, the device type, the device model, the SCSI implementation level, the command set, mode pages, and any other operating characteristics.

After a power-on condition or a hard RESET condition, the target shall set its initial operating definition to the last saved value, if saving is implemented, or its default value, if saving is not implemented.

Copyright International Organization for Standardization
Provided by IHS under license with ISO
No reproduction or networking permitted without license from IHS Not for Resale

8.2.2 COMPARE command

The COMPARE command (see table 34) provides the means to compare data from one logical unit with another or the same logical unit in a manner similar to the COPY command.

Table 34 - COMPARE command

Bit / Byte	7	6	5	4	3	2	1	0
0	Operation code (39h)							
1	Logical unit number			Reserved				Pad
2	Reserved							
3	(MSB)							
4	Parameter list length							
5								(LSB)
6	Reserved							
7	Reserved							
8	Reserved							
9	Control							

This command functions in the same manner as the COPY command, except that the data from the source is compared on a byte-by-byte basis with the data from the destination. The parameter list transferred to the target is the same as for the COPY command. This parameter list contains the information to identify the logical units involved in the comparison and the length of the comparison. (See 8.2.3 for additional information about the COPY command.)

If the comparison is unsuccessful, the command shall be terminated with CHECK CONDITION status and the sense key shall be set to MISCOMPARE. The remaining fields in the sense data shall be set as documented in the COPY command.

Copyright International Organization for Standardization
Provided by IHS under license with ISO
No reproduction or networking permitted without license from IHS Not for Resale

8.2.3 COPY command

The COPY command (see table 35) provides a means to copy data from one logical unit to another or the same logical unit. The logical unit that receives and performs the COPY command is called the copy manager. The copy manager is responsible for copying data from a logical unit (source device) to a logical unit (destination device). These logical units may reside on different SCSI devices or the same SCSI device (in fact all three may be the same logical unit). Some SCSI devices that implement this command may not support copies to or from another SCSI device, or may not support third party copies (i.e. both the source and the destination logical units reside on other SCSI devices).

Table 35 - COPY command

Bit / Byte	7	6	5	4	3	2	1	0
0	Operation code (18h)							
1	Logical unit number			Reserved				Pad
2	(MSB)							
3	Parameter list length							
4								(LSB)
5	Control							

The Pad bit (8.2.3.7) is used in conjunction with the Cat bit (8.2.3.7) in the segment descriptors to define what action should be taken when a segment of the copy does not fit exactly into an integer number of destination blocks.

The parameter list length field specifies the length in bytes of the parameters that shall be sent during the DATA OUT phase of the command. A parameter list length of zero indicates that no data shall be transferred. This condition shall not be considered as an error.

The COPY parameter list (see table 36) begins with a four-byte header that contains the COPY function code and priority. Following the header is one or more segment descriptors.

Table 36 - COPY parameter list

Bit / Byte	7	6	5	4	3	2	1	0
0	COPY function code					Priority		
1	Vendor-specific							
2	Reserved							
3	Reserved							
	Segment descriptor(s)							
0	Segment descriptor 0							
n	(See specific table for length.)							
	.							
0	Segment descriptor x							
n	(See specific table for length.)							

Copyright International Organization for Standardization
Provided by IHS under license with ISO
No reproduction or networking permitted without license from IHS Not for Resale

The COPY function code field defines a specific format for the segment descriptors. The COPY function codes are defined in table 37. A target need not support all function codes for its device type.

Table 37 - COPY function codes

Peripheral device type		COPY function code	Segment descriptor table	Comments
Source	Destination			
Block devices (Device types 0,4,5,7)	Stream devices (Device types 1,2,3,9)	0	38	
Stream devices (Device types 1,3,9)	Block devices (Device types 0,4,5,7)	1	38	(Note 3)
Block devices (Device types 0,4,5,7)	Block devices (Device types 0,4,5,7)	2	39	(Note 3)
Stream devices (Device types 1,3,9)	Stream devices (Device types 1,2,3,9)	3	40	
Sequential-access (Device type 1)	Sequential-access (Device type 1)	4	41	Image copy

NOTES
1 COPY function codes 05h - 0Fh are reserved.
2 COPY function codes 10h - 1Fh are vendor-specific.
3 When using the COMPARE command the destination block device may be a CD-ROM device or an optical-memory device that uses read-only media.
4 See 8.2.5.1 for peripheral device type definitions.

The priority field of the COPY parameter list establishes the relative priority of this COPY command to other commands being executed by the same target. All other commands are assumed to have a priority of 1. Priority 0 is the highest priority, with increasing values indicating lower priorities.

The segment descriptor formats are determined by the COPY function code. The segment descriptor format used for block devices (i.e. write-once, CD-ROM, optical-memory, and direct-access devices) shall be the same. The segment descriptor format used for stream devices (i.e. printer, processor, communications, and sequential-access devices) shall be the same. Thus a copy operation from a write-once device to a printer device uses the same segment descriptor format as a copy operation from a direct-access device to a sequential-access device (see table 37). The segment descriptor formats are described in 8.2.3.3 through 8.2.3.6. A maximum of 256 segment descriptors are permitted. The segment descriptors are identified by ascending numbers beginning with zero.

8.2.3.1 Errors detected by the managing SCSI device

Two classes of exception conditions may occur during execution of a COPY command. The first class consists of those exception conditions detected by the SCSI device that received the COPY command and is managing the execution of the command. These conditions include parity errors while transferring the COPY command and status byte, invalid parameters in the COPY command, invalid segment descriptors, and inability of the SCSI device controlling the COPY functions to continue operating. In the event of such an exception condition, the SCSI device managing the COPY shall:

a) terminate the COPY command with CHECK CONDITION status.
b) set the valid bit in the sense data to one. The segment number shall contain the number of the segment descriptor being processed at the time the exception condition is detected. The sense key shall contain the sense key code describing the exception condition (i.e. not COPY ABORTED). The information field shall contain the difference between the number of blocks field in the segment descriptor being processed at the time of the failure and the number of blocks successfully copied. This number is the residue of unprocessed blocks remaining for the segment descriptor.

Copyright International Organization for Standardization
Provided by IHS under license with ISO
No reproduction or networking permitted without license from IHS Not for Resale

8.2.3.2 Errors detected by a target

The second class of errors consists of exception conditions detected by the SCSI device transferring data at the request of the SCSI device managing the transfer. The SCSI device managing the COPY command detects exception conditions by receiving CHECK CONDITION status from one of the SCSI devices it is managing. It then shall recover the sense data associated with the exception condition.

The SCSI device managing the COPY command may also be the source or destination SCSI device (or both). It shall distinguish between a failure of the management of the COPY and a failure of the data transfer being requested. It shall then create the appropriate sense data internally.

After recovering the sense data associated with the detected error, the SCSI device managing the COPY command shall:

a) terminate the COPY command with CHECK CONDITION status.
b) set the valid bit in the sense data to one. The segment number shall contain the number of the segment descriptor being processed at the time the exception condition is detected. The sense key shall be set to COPY ABORTED. The information field shall contain the difference between the number of blocks field in the segment descriptor being processed at the time of the failure and the number of blocks successfully copied. This number is the residue of unprocessed blocks remaining for the segment descriptor.

The first byte of the command-specific information field shall specify the starting byte number, relative to the first byte of sense data, of an area that contains (unchanged) the source logical unit's status byte and sense data. A zero value indicates that no status byte or sense data is being returned for the source logical unit.

The second byte of the command-specific information field shall specify the starting byte number, relative to the first byte of sense data, of an area that contains (unchanged) the destination logical unit's status byte and sense data. A zero value indicates that no status byte or sense data is being returned for the destination logical unit.

8.2.3.3 COPY function code 00h and 01h

The format for the segment descriptors for COPY transfers between block and stream devices is specified in table 38. This format is required for COPY function codes 00h or 01h. The segment descriptor may be repeated up to 256 times within the parameter list length specified in the command descriptor block.

Table 38 - Segment descriptor for COPY function codes 00h and 01h

Bit / Byte	7	6	5	4	3	2	1	0
0	Source address			Reserved	Cat	Source LUN		
1	Destination address			Reserved		Destination LUN		
2	(MSB)			Stream device block length				
3								(LSB)
4	(MSB)			Block device number of blocks				
7								(LSB)
8	(MSB)			Block device logical block address				
11								(LSB)

The source address and source LUN fields specify the SCSI bus ID and logical unit of the device to copy the data from for this segment of the COPY command. The destination address and destination LUN fields specify the SCSI bus ID and logical unit to copy the data to for this segment of the COPY command. Some SCSI devices may not support third-party COPY in which the copying SCSI device is not the source or destination device. Some SCSI

Copyright International Organization for Standardization
Provided by IHS under license with ISO
No reproduction or networking permitted without license from IHS Not for Resale

devices only support COPY within the SCSI device and not to other SCSI devices. If an unsupported COPY operation is requested, the command shall be terminated with CHECK CONDITION status and the sense key shall be set to ILLEGAL REQUEST with an additional sense code of INVALID FIELD IN PARAMETER LIST (see 8.2.3.1).

A catenate (Cat) bit (optional) of one indicates that the COPY manager shall catenate the last source block of a segment with the first source block of the next segment if the last source block does not end exactly at the end of the destination block. The definition of a Cat bit of zero depends on the setting of the Pad bit in the command descriptor block (see 8.2.3.7).

The stream device block-length field specifies the block length to be used on the stream device logical unit during this segment of the COPY command. If the SCSI device managing the COPY knows this block length is not supported, the command shall be terminated with CHECK CONDITION status and the sense key shall be set to ILLEGAL REQUEST with an additional sense code of INVALID FIELD IN PARAMETER LIST. If the block length is found to be invalid while executing a read or write operation to the stream device, the command shall be terminated with CHECK CONDITION status and the sense key shall be set to COPY ABORTED (see 8.2.3.2).

The block device number of blocks field specifies the number of blocks in the current segment to be copied. A value of zero indicates that no blocks shall be transferred in this segment.

The block device logical block address field specifies the starting logical block address on the logical unit for this segment.

8.2.3.4 COPY function code 02h

The format for the segment descriptors for COPY transfers among block devices is specified in table 39. This format is required for COPY function code 02h. The segment descriptor may be repeated up to 256 times within the parameter list length specified in the command descriptor block.

Table 39 - Segment descriptor for COPY function code 02h

Bit / Byte	7	6	5	4	3	2	1	0
0	Source address			DC	Cat	Source LUN		
1	Destination address			Reserved		Destination LUN		
2	Reserved							
3	Reserved							
4	(MSB)							
— — —			Number of blocks					
7								(LSB)
8	(MSB)							
— — —			Source logical block address					
11								(LSB)
12	(MSB)							
— — —			Destination logical block address					
15								(LSB)

See 8.2.3.3 for definitions of the source address, the source LUN, the destination address, the destination LUN, and Cat fields.

A destination count (DC) bit of zero indicates that the number of blocks field refers to the source logical unit. A DC bit of one indicates that the number of blocks field refers to the destination logical unit.

Copyright International Organization for Standardization
Provided by IHS under license with ISO
No reproduction or networking permitted without license from IHS Not for Resale

The number of blocks field specifies the number of blocks to be transferred to or from (depending on the DC bit) the block device during this segment. A value of zero indicates that no blocks shall be transferred.

The source logical block address field specifies the starting logical block address on the source block device.

The destination logical block address field specifies the starting logical block address on the destination block device.

8.2.3.5 COPY function code 03h

The format for the segment descriptors for COPY transfers among stream devices is specified by table 40. This format is required for COPY function code 03h. The segment descriptor may be repeated up to 256 times within the parameter list length specified in the command descriptor block.

Table 40 - Segment descriptor for COPY function code 03h

Bit / Byte	7	6	5	4	3	2	1	0
0	Source address			DC	Cat	Source LUN		
1	Destination address			Reserved		Destination LUN		
2	Reserved							
3	Reserved							
4	(MSB)			Source block length				
5								(LSB)
6	(MSB)			Destination block length				
7								(LSB)
8	(MSB)			Number of blocks				
11								(LSB)

See 8.2.3.3 for definitions of the source address, the source LUN, the destination address, the destination LUN, and Cat fields.

A destination count (DC) bit of zero indicates that the number of blocks field refers to the source logical unit. A DC bit of one indicates that the number of blocks field refers to the destination logical unit.

The source block length field specifies the block-length of the source device for this segment of the COPY. A zero in this field indicates variable block-length. For non-zero values, this field shall match the logical unit's actual block-length.

If block-length mismatches are detected prior to the beginning of the read operation by the SCSI device managing the COPY, the command shall be terminated with CHECK CONDITION status. The sense key shall be set to ILLEGAL REQUEST and the additional sense code shall be set to INVALID FIELD IN PARAMETER LIST (see 8.2.3.1).

If the mismatches are detected during the read operation by the COPY manager, the command shall be terminated with CHECK CONDITION status. The sense key shall be set to COPY ABORTED (see 8.2.3.2). and the additional sense code shall be set to INVALID FIELD IN PARAMETER LIST.

The destination block-length field specifies the block length to be used on the destination logical unit during the COPY. Destination block length mismatches are handled in an analogous manner as source block length mismatches.

Copyright International Organization for Standardization
Provided by IHS under license with ISO
No reproduction or networking permitted without license from IHS Not for Resale

The number of blocks field specifies the number of blocks to be transferred to or from (depending on the DC bit) the device during this segment. A value of zero indicates that no blocks shall be transferred.

8.2.3.6 COPY function code 04h

The format for the segment descriptors for image COPY transfers between sequential-access devices is specified in table 41. This format is required for COPY function code 04h. The segment descriptor may be repeated up to 256 times within the parameter list length specified in the command descriptor block.

Table 41 - Segment descriptor for COPY function code 04h

Bit / Byte	7	6	5	4	3	2	1	0
0	Source address			Reserved		Source LUN		
1	Destination address			Reserved		Destination LUN		
2	Count							
3 – 7	Reserved							
8 – 11	Vendor-specific							

See 8.2.3.3 for definitions of the source address, the source LUN, the destination address, the destination LUN, and Cat fields.

The image mode COPY command copies an exact image of the source device medium to the destination device medium, beginning at their current positions. The copy function terminates when the source device:

a) encounters an end-of-partition as defined by the source device;
b) encounters an end-of-data as defined by the source device (i.e. BLANK CHECK sense key);
c) has copied the number of consecutive filemarks specified in the count field from the source device to the destination device;
d) has copied the number of consecutive setmarks specified in the count field from the source device to the destination device, if the RSmk bit in the device configuration page (see 10.3.3.1) is one.

A count field of zero indicates that the COPY command shall not terminate due to any number of consecutive filemarks or setmarks. Other error or exception conditions (e.g. early-warning end-of-partition on the destination device) may cause the COPY command to terminate prior to completion. In such cases, it is not possible to calculate a residue, so the information field in the sense data shall be set to zero.

8.2.3.7 Copies with unequal block lengths

When copying data between two devices with unequal block lengths, it is possible for the last source block to not completely fill the last destination block for one or more segments in the COPY command. Two optional bits are defined to assist in controlling the copy manager's actions in this circumstance. The Pad bit (in the command descriptor block) and the Cat bit (in each applicable segment descriptor) are defined in table 42.

Copyright International Organization for Standardization
Provided by IHS under license with ISO
No reproduction or networking permitted without license from IHS Not for Resale

Table 42 - Pad and Cat bit definition

Pad	Cat	COPY manager's action
0	0	On inexact segments, it is device specific whether the COPY manager rejects the COPY command with CHECK CONDITION status and ILLEGAL REQUEST sense key, the COPY manager writes or accepts short blocks (variable-block mode on sequential-access devices), or the COPY manager adds pad characters (00h) to the destination block or strips pad characters from the source block.
1	0	On inexact segments, the COPY manager shall add pad characters (00h) to the destination block to completely fill the block, or it shall strip pad characters from the source block, always stopping at the end of a complete block.
X	1	The COPY manager shall always write or read complete blocks. On inexact segments, the remainder of the block contains data from the next segment. This code is not valid in the last segment of the COPY command.

NOTE 63 Use of pad characters is intended to assist in managing COPY commands between devices of different block lengths where partial-block residues may occur. The initiator who issued the COPY command is responsible for management of these pad areas (i.e. remembering where they are). One possible method is to write the COPY parameter list information to the destination medium prior to issuing the COPY command for backup and to read this information prior to issuing the COPY command for restore.

8.2.4 COPY AND VERIFY command

The COPY AND VERIFY command (see table 43) performs the same function as the COPY command, except that a verification of the data written to the destination logical unit is performed after the data is written. The parameter list transferred to the target is the same as for the COPY command. This parameter list contains the information to identify the logical units involved in the copy and the length of the copy. See 8.2.3 for additional information about the COPY command.

Table 43 - COPY AND VERIFY command

Bit / Byte	7	6	5	4	3	2	1	0
0	Operation code (3Ah)							
1	Logical unit number			Reserved			BytChk	Pad
2	Reserved							
3	(MSB)							
4	Parameter list length							
5								(LSB)
6	Reserved							
7	Reserved							
8	Reserved							
9	Control							

A byte check (BytChk) bit of zero causes a medium verification to be performed with no data comparison. A BytChk bit of one causes a byte-by-byte comparison of data written on the destination medium and the data transferred from the source medium. If the comparison is unsuccessful for any reason, the copy manager shall return CHECK

Copyright International Organization for Standardization
Provided by IHS under license with ISO
No reproduction or networking permitted without license from IHS Not for Resale

CONDITION status with the sense key set to MISCOMPARE. The remaining fields in the sense data shall be set as documented in the COPY command.

8.2.5 INQUIRY command

The INQUIRY command (see table 44) requests that information regarding parameters of the target and its attached peripheral device(s) be sent to the initiator. An option allows the initiator to request additional information about the target or logical unit (see 8.2.5.2).

Table 44 - INQUIRY command

Bit / Byte	7	6	5	4	3	2	1	0
0	Operation code (12h)							
1	Logical unit number			Reserved				EVPD
2	Page code							
3	Reserved							
4	Allocation length							
5	Control							

An enable vital product data (EVPD) bit of one specifies that the target shall return the optional vital product data specified by the page code field. If the target does not support vital product data and this bit is set to one, the target shall return CHECK CONDITION status with the sense key set to ILLEGAL REQUEST and an additional sense code of INVALID FIELD IN CDB.

An EVPD bit of zero specifies that the target shall return the standard INQUIRY data. If the page code field is not zero, the target shall return CHECK CONDITION status with the sense key set to ILLEGAL REQUEST and an additional sense code of INVALID FIELD IN CDB.

The page code field specifies which page of vital product data information the target shall return (see 8.3.4).

The INQUIRY command shall return CHECK CONDITION status only when the target cannot return the requested INQUIRY data.

NOTE 64 The INQUIRY data should be returned even though the peripheral device may not be ready for other commands.

If an INQUIRY command is received from an initiator with a pending unit attention condition (i.e. before the target reports CHECK CONDITION status), the target shall perform the INQUIRY command and shall not clear the unit attention condition (see 7.9).

NOTES
65 The INQUIRY command is typically used by the initiator after a reset or power-up condition to determine the device types for system configuration. To minimize delays after a reset or power-up condition, the standard INQUIRY data should be available without incurring any media access delays. If the target does store some of the INQUIRY data on the device, it may return zeros or ISO/IEC 646 character spaces (20h) in those fields until the data is available from the device.
66 The INQUIRY data may change as the target executes its initialization sequence or in response to a CHANGE DEFINITION command. For example, the target may contain a minimum command set in its non-volatile memory and may load its final firmware from the device when it becomes ready. After it has loaded the firmware, it may support more options and therefore return different supported options information in the INQUIRY data.

Copyright International Organization for Standardization
Provided by IHS under license with ISO
No reproduction or networking permitted without license from IHS Not for Resale

8.2.5.1 Standard INQUIRY data

The standard INQUIRY data (see table 45) contains 36 required bytes, followed by a variable number of vendor-specific parameters. Bytes 56 through 95, if returned, are reserved for future standardization.

Table 45 - Standard INQUIRY data format

Bit / Byte	7	6	5	4	3	2	1	0
0	Peripheral qualifier			Peripheral device type				
1	RMB	Device-type modifier						
2	ISO version		ECMA version			ANSI-approved version		
3	AENC	TrmIOP	Reserved		Response data format			
4	Additional length (n-4)							
5	Reserved							
6	Reserved							
7	RelAdr	WBus32	WBus16	Sync	Linked	Reserved	CmdQue	SftRe
8 — 15	(MSB) Vendor identification (LSB)							
16 — 31	(MSB) Product identification (LSB)							
32 — 35	(MSB) Product revision level (LSB)							
36 — 55	Vendor-specific							
56 — 95	Reserved							
	Vendor-specific parameters							
996 — n	Vendor-specific							

The peripheral qualifier and peripheral device-type fields identify the device currently connected to the logical unit. If the target is not capable of supporting a device on this logical unit, this field shall be set to 7Fh (peripheral qualifier set to 011b and peripheral device type set to 1Fh). The peripheral qualifier is defined in table 46 and the peripheral device type is defined in table 47.

Copyright International Organization for Standardization
Provided by IHS under license with ISO
No reproduction or networking permitted without license from IHS Not for Resale

Table 46 - Peripheral qualifier

Qualifier	Description
000b	The specified peripheral device type is currently connected to this logical unit. If the target cannot determine whether or not a physical device is currently connected, it shall also use this peripheral qualifier when returning the INQUIRY data. This peripheral qualifier does not mean that the device is ready for access by the initiator.
001b	The target is capable of supporting the specified peripheral device type on this logical unit; however, the physical device is not currently connected to this logical unit.
010b	Reserved
011b	The target is not capable of supporting a physical device on this logical unit. For this peripheral qualifier the peripheral device type shall be set to 1Fh to provide compatibility with previous versions of SCSI. All other peripheral device type values are reserved for this peripheral qualifier.
1XXb	Vendor-specific

Table 47 - Peripheral device type

Code	Description
00h	Direct-access device (e.g. magnetic disk)
01h	Sequential-access device (e.g. magnetic tape)
02h	Printer device
03h	Processor device
04h	Write-once device (e.g. some optical disks)
05h	CD-ROM device
06h	Scanner device
07h	Optical memory device (e.g. some optical disks)
08h	Medium changer device (e.g. jukeboxes)
09h	Communications device
0Ah - 0Bh	Reserved for graphic arts pre-press devices
0Ch - 1Eh	Reserved
1Fh	Unknown or no device type

A removable medium (RMB) bit of zero indicates that the medium is not removable. A RMB bit of one indicates that the medium is removable.

The device-type modifier field was defined in SCSI-1 to permit vendor-specific qualification codes of the device type. This field is retained for compatibility with SCSI-1. Targets that do not support this field should return a value of zero.

The usage of non-zero code values in the ISO version and ECMA version fields are defined by the International Organization for Standardization and the European Computer Manufacturers Association, respectively. A zero code value in these fields shall indicate that the target does not claim compliance to the ISO version of SCSI (ISO 9316) or the ECMA version of SCSI (ECMA-111). It is possible to claim compliance to more than one of these SCSI standards.

The ISO-approved version field indicates the implemented version of this International Standard and is defined in table 48.

Copyright International Organization for Standardization
Provided by IHS under license with ISO
No reproduction or networking permitted without license from IHS Not for Resale

Table 48 - ISO-approved version

Code	Description
0h	The device might or might not comply to an International standard.
1h	The device complies to ISO 9316:1989 (SCSI-1).
2h	The device complies to this version of SCSI (SCSI-2).
3h	Reserved

The asynchronous event notification capability (AENC) bit indicates that the device supports the asynchronous event notification capability as defined in 7.5.5.

a) Processor device-type definition: An AENC bit of one indicates that the processor device is capable of accepting asynchronous event notifications. An AENC bit of zero indicates that the processor device does not support asynchronous event notifications.
b) All other device-types: This bit is reserved.

A terminate I/O process (TrmIOP) bit of one indicates that the device supports the TERMINATE I/O PROCESS message as defined in 6.6.22. A value of zero indicates that the device does not support the TERMINATE I/O PROCESS message.

A response data format value of zero indicates the INQUIRY data format is as specified in SCSI-1. A response data format value of one indicates compatibility with some products that were designed prior to the development of this standard. A response data format value of two indicates that the data shall be in the format specified in this International Standard. Response data format values greater than two are reserved.

The additional length field shall specify the length in bytes of the parameters. If the allocation length of the command descriptor block is too small to transfer all of the parameters, the additional length shall not be adjusted to reflect the truncation.

A relative addressing (RelAdr) bit of one indicates that the device supports the relative addressing mode for this logical unit. If this bit is set to one, the linked command (Linked) bit shall also be set to one; since relative addressing can only be used with linked commands. A RelAdr bit of zero indicates the device does not support relative addressing for this logical unit.

A wide bus 32 (Wbus32) bit of one indicates that the device supports 32-bit wide data transfers. A value of zero indicates that the device does not support 32-bit wide data transfers.

A wide bus 16 (Wbus16) bit of one indicates that the device supports 16-bit wide data transfers. A value of zero indicates that the device does not support 16-bit wide data transfers.

NOTE 67 If the values of both the Wbus16 and Wbus32 bits are zero, the device only supports 8-bit wide data transfers.

A synchronous transfer (Sync) bit of one indicates that the device supports synchronous data transfer. A value of zero indicates the device does not support synchronous data transfer.

A linked command (Linked) bit of one indicates that the device supports linked commands for this logical unit. A value of zero indicates the device does not support linked commands for this logical unit.

A command queuing (CmdQue) bit of one indicates that the device supports tagged command queuing for this logical unit. A value of zero indicates the device does not support tagged command queuing for this logical unit.

A soft reset (SftRe) bit of zero indicates that the device responds to the RESET condition with the hard RESET alternative (see 6.2.2.1). A SftRe bit of one indicates that the device responds to the RESET condition with the soft RESET alternative (see 6.2.2.2).

Copyright International Organization for Standardization
Provided by IHS under license with ISO
No reproduction or networking permitted without license from IHS Not for Resale

ISO/IEC 646 character data fields shall contain only graphic codes (i.e. code values 20h through 7Eh). Left-aligned fields shall place any unused bytes at the end of the field (highest offset) and the unused bytes shall be filled with space characters (20h). Right-aligned fields shall place any unused bytes at the start of the field (lowest offset) and the unused bytes shall be filled with space characters (20h).

The vendor identification field contains eight bytes of ISO/IEC 646 character data identifying the vendor of the product. The data shall be left aligned within this field.

NOTE 68 It is intended that this field provide a unique vendor identification of the manufacturer of the SCSI device. In the absence of a formal registration procedure, X3T10 maintains a list of vendor identification codes in use. Vendors are requested to voluntarily submit their identification codes to X3T10 to prevent duplication of codes (see annex E).

The product identification field contains sixteen bytes of ISO/IEC 646 character data as defined by the vendor. The data shall be left-aligned within this field.

The product revision level field contains four bytes of ISO/IEC 646 character data as defined by the vendor. The data shall be left-aligned within this field.

8.2.5.2 Vital product data

Implementation of vital product data is optional. The information returned consists of configuration data (e.g. vendor identification, product identification, model, serial number), manufacturing data (e.g. plant and date of manufacture), field replaceable unit data and other vendor- or device-specific data.

The initiator requests the vital product data information by setting the EVPD bit to one and specifying the page code of the desired vital product data (see 8.3.4). If the target does not implement the requested page it shall return CHECK CONDITION status. The a sense key shall be set to ILLEGAL REQUEST and the additional sense code shall be set to INVALID FIELD IN CDB.

NOTES

69 The target should have the ability to execute the INQUIRY command even when a device error occurs that prohibits normal command execution. In such a case, CHECK CONDITION status should be returned for commands other than INQUIRY or REQUEST SENSE. The sense data returned may contain the field replaceable unit code. The vital product data should be obtained for the failing device using the INQUIRY command.

70 This International Standard defines a format that allows device-independent initiator software to display the vital product data returned by the INQUIRY command. For example, the initiator may display the data associated for the field replaceable unit returned in the sense data. The contents of the data may be vendor-specific; therefore, it may not be usable without detailed information about the device.

71 This International Standard does not define the location or method of storing the vital product data. The retrieval of the data may require completion of initialization operations within the device that may induce delays before the data is available to the initiator. Time-critical requirements are an implementation consideration and are not addressed in this International Standard.

Copyright International Organization for Standardization
Provided by IHS under license with ISO
No reproduction or networking permitted without license from IHS Not for Resale

8.2.6 LOG SELECT command

The LOG SELECT command (see table 49) provides a means for the initiator to manage statistical information maintained by the device about the device or its logical units. Targets that implement the LOG SELECT command shall also implement the LOG SENSE command. Structures in the form of log parameters within log pages are defined as a way to manage the log data. The LOG SELECT command provides for sending zero or more log pages during a DATA OUT phase. This International Standard defines the format of the log pages, but does not define the exact conditions and events that are logged.

Table 49 - LOG SELECT command

Bit / Byte	7	6	5	4	3	2	1	0
0	Operation code (4Ch)							
1	Logical unit number			Reserved			PCR	SP
2	PC		Reserved					
3	Reserved							
4	Reserved							
5	Reserved							
6	Reserved							
7	(MSB) Parameter list length							
8	(LSB)							
9	Control							

A parameter code reset (PCR) bit of one and a parameter list length of zero shall cause all implemented parameters to be set to the target-defined default values (e.g. zero). If the PCR bit is one and the parameter list length is greater than zero, the command is terminated with CHECK CONDITION status. The sense key shall be set to ILLEGAL REQUEST and the additional sense code shall be set to INVALID FIELD IN CDB. A PCR bit of zero specifies that the log parameters shall not be reset.

A save parameters (SP) bit of one indicates that after performing the specified LOG SELECT operation the target shall save to non-volatile memory all parameters identified as savable by the DS bit in the log page (see 8.3.2). A SP bit of zero specifies that parameters shall not be saved.

Saving of log parameters is optional and indicated for each log parameter by the DS bit in the page. Log parameters may be saved at vendor-specific times subject to the TSD bit (see 8.3.2) in the log parameter. If the target does not implement saved parameters for any log parameter and the SP bit is set to one, the command shall be terminated with CHECK CONDITION status. The sense key shall be set to ILLEGAL REQUEST, and the additional sense code set to INVALID FIELD IN CDB.

It is not an error to set the SP bit to one and to set the DS bit of a log parameter to one. In this case, the parameter value for that log parameter is not saved.

The page control (PC) field defines the type of parameter values to be selected. The page control field is defined in table 50.

Copyright International Organization for Standardization
Provided by IHS under license with ISO
No reproduction or networking permitted without license from IHS Not for Resale

Table 50 - Page control field

Type	LOG SELECT parameter values	LOG SENSE parameter values
00b	Current threshold values	Threshold values
01b	Current cumulative values	Cumulative values
10b	Default threshold values	Default threshold values
11b	Default cumulative values	Default cumulative values

The current cumulative values may be updated by the target or by the initiator using the LOG SELECT command to reflect the cumulative number of events experienced by the target. Fields in the parameter control byte (8.3.2) of each log parameter control the updating and saving of the current cumulative parameters.

The target shall set the current threshold parameters to the default threshold values in response to a LOG SELECT command with the PC field set to 10b and the parameter list length field set to zero.

The target shall set all cumulative parameters to their default values in response to a LOG SELECT command with the PC field set to 11b and the parameter list length field set to zero.

The current threshold value can only be modified by the initiator via the LOG SELECT command. If the initiator attempts to change current threshold values that are not available or not implemented for that log parameter, then the target shall terminate the LOG SELECT command with CHECK CONDITION status, the sense key set to ILLEGAL REQUEST, and the additional sense code set to INVALID FIELD IN PARAMETER LIST. The saving of current threshold parameters and the criteria for the current threshold being met are controlled by bits in the parameter control byte (8.3.2).

NOTE 72 Pages or log parameters that are not available may become available at some later time (e.g. after the device has become ready).

The parameter list length field specifies the length in bytes of the parameter list that shall be transferred from the initiator to the target during the DATA OUT phase. A parameter list length of zero indicates that no pages shall be transferred. This condition shall not be considered an error. If the initiator sends page codes or parameter codes within the parameter list that are reserved or not implemented by the target, the target shall terminate the LOG SELECT command with CHECK CONDITION status. The sense key shall be set to ILLEGAL REQUEST and the additional sense code set to INVALID FIELD IN PARAMETER LIST.

If a parameter list length results in the truncation of any log parameter, the target shall terminate the command with CHECK CONDITION status. The sense key shall be set to ILLEGAL REQUEST and the additional sense code set to INVALID FIELD IN CDB.

The initiator should send pages in ascending order by page code value if multiple pages are sent during a DATA OUT phase. If multiple log parameters within a page are sent during the DATA OUT phase, they should be sent in ascending order by parameter code value. The target shall return CHECK CONDITION status if the initiator sends pages out of order or parameter codes out of order. The sense key shall be set to ILLEGAL REQUEST and the additional sense code set to INVALID FIELD IN PARAMETER LIST.

NOTE 73 Initiators should issue LOG SENSE commands prior to issuing LOG SELECT commands to determine supported pages and page lengths.

The target may provide independent sets of log parameters for each logical unit or for each combination of logical units and initiators. If the target does not support independent sets of log parameters and any log parameters are changed that affect other initiators, then the target shall generate a unit attention condition for all initiators except the one that issued the LOG SELECT command (see 7.9). This unit attention condition is returned with an additional sense code of LOG PARAMETERS CHANGED.

Copyright International Organization for Standardization
Provided by IHS under license with ISO
No reproduction or networking permitted without license from IHS Not for Resale

If the initiator sends a log parameter that is not supported by the target, the target shall terminate the command with CHECK CONDITION status, set the sense key to ILLEGAL REQUEST, and set the additional sense code to INVALID FIELD IN PARAMETER LIST.

8.2.7 LOG SENSE command

The LOG SENSE command (see table 51) provides a means for the initiator to retrieve statistical information maintained by the device about the device or its logical units. It is a complementary command to the LOG SELECT command.

Table 51 - LOG SENSE command

Bit / Byte	7	6	5	4	3	2	1	0
0	Operation code (4Dh)							
1	Logical unit number			Reserved			PPC	SP
2	PC			Page code				
3	Reserved							
4	Reserved							
5	(MSB)			Parameter pointer				
6								(LSB)
7	(MSB)			Allocation length				
8								(LSB)
9	Control							

The parameter pointer control (PPC) bit controls the type of parameters requested from the target:

a) A PPC bit of one indicates that the target shall return a log page with parameter code values that have changed since the last LOG SELECT or LOG SENSE command. The target shall return only those parameter codes following the parameter pointer field.

b) A PPC bit of zero indicates that the log parameter requested from the target shall begin with the parameter code specified in the parameter pointer field and return the number of bytes specified by the allocation length field in ascending order of parameter codes from the specified log page. A PPC bit of zero and a parameter pointer field of zero shall cause all available log parameters for the specified log page to be returned to the initiator subject to the specified allocation length.

Saving parameters is an optional function of the LOG SENSE command. If the target does not implement saving log parameters and if the save parameters (SP) bit is one, then the target shall return CHECK CONDITION status, set the sense key to ILLEGAL REQUEST, and set the additional sense code to INVALID FIELD IN CDB.

An SP bit of zero indicates the target shall perform the specified LOG SENSE command and shall not save any log parameters. If saving log parameters is implemented, an SP bit of one indicates that the target shall perform the specified LOG SENSE command and shall save all log parameters identified as savable by the DS bit (8.3.2) to a non-volatile, vendor-specific location.

The page control (PC) field defines the type of parameter values to be selected (see 8.2.6 for the definition of the page control field). The parameter values returned by a LOG SENSE command are determined as follows:

a) The specified parameter values at the last update (in response to a LOG SELECT or LOG SENSE command or done automatically by the target for cumulative values).

b) The saved values, if an update has not occurred since the last power-on, hard RESET condition, or BUS DEVICE RESET message and saved parameters are implemented.

--`,,```,,,,````-`-`,,`,,`,`,,`---
Copyright International Organization for Standardization
Provided by IHS under license with ISO
No reproduction or networking permitted without license from IHS Not for Resale

c) The default values, if an update has not occurred since the last power-on, hard RESET condition, or BUS DEVICE RESET message and saved values are not available or not implemented.

The page code field identifies which page of data is being requested (see 8.3.2). If the page code is reserved or not implemented, the target shall terminate the command with CHECK CONDITION status. The sense key shall be set to ILLEGAL REQUEST with the additional sense code set to INVALID FIELD IN CDB.

The parameter pointer field allows the initiator to request parameter data beginning from a specific parameter code to the maximum allocation length or the maximum parameter code supported by the target, whichever is less. If the value of the parameter pointer field is larger than the largest available parameter code that can be returned by the target on the specified page, the target shall terminate the command with CHECK CONDITION status. The sense key shall be set to ILLEGAL REQUEST and the additional sense code shall be set to INVALID FIELD IN CDB.

Log parameters within the specified log page shall be transferred in ascending order according to parameter code.

8.2.8 MODE SELECT(6) command

The MODE SELECT(6) command (see table 52) provides a means for the initiator to specify medium, logical unit, or peripheral device parameters to the target. Targets that implement the MODE SELECT command shall also implement the MODE SENSE command. Initiators should issue MODE SENSE prior to each MODE SELECT to determine supported pages, page lengths, and other parameters.

Table 52 - MODE SELECT(6) command

Bit / Byte	7	6	5	4	3	2	1	0
0	Operation code (15h)							
1	Logical unit number			PF	Reserved			SP
2	Reserved							
3	Reserved							
4	Parameter list length							
5	Control							

If a target supports saved pages, it may save only one copy of the page for each logical unit and have it apply to all initiators, or it may save separate copies for each initiator for each logical unit. If separate copies are saved, the target shall maintain separate current values for each I_T_L nexus. Pages that are common to all initiators are not required to have multiple copies.

If an initiator sends a MODE SELECT command that changes any parameters applying to other initiators, the target shall generate a unit attention condition for all initiators except the one that issued the MODE SELECT command (see 7.9). The target shall set the additional sense code to MODE PARAMETERS CHANGED.

The target may provide for independent sets of parameters for each attached logical unit or for each combination of logical unit and initiator. If independent sets of parameters are implemented, and a third party reservation is requested, the target transfers the set of parameters in effect for the initiator of the RESERVE command to the parameters used for commands from the third party device (see 9.2.12.3 and 10.2.10.1).

A page format (PF) bit of zero indicates that the MODE SELECT parameters are as specified in SCSI-1, (i.e. all parameters after the block descriptors are vendor-specific). A PF bit of one indicates that the MODE SELECT parameters following the header and block descriptor(s) are structured as pages of related parameters and are as specified in this International Standard.

Copyright International Organization for Standardization
Provided by IHS under license with ISO
No reproduction or networking permitted without license from IHS Not for Resale

A save pages (SP) bit of zero indicates the target shall perform the specified MODE SELECT operation, and shall not save any pages. An SP bit of one indicates that the target shall perform the specified MODE SELECT operation, and shall save to a non-volatile vendor-specific location all the savable pages including any sent during the DATA OUT phase. The SP bit is optional, even when mode pages are supported by the target. Pages that are saved are identified by the parameter savable bit that is returned in the page header by the MODE SENSE command (see 8.3.3). If the PS bit is set in the MODE SENSE data then the page shall be savable by issuing a MODE SELECT command with the SP bit set. If the target does not implement saved pages and the SP bit is set to one, the command shall be terminated with CHECK CONDITION status. The sense key shall be set to ILLEGAL REQUEST, and the additional sense code set to INVALID FIELD IN CDB.

The parameter list length field specifies the length in bytes of the mode parameter list that shall be transferred from the initiator to the target during the DATA OUT phase. A parameter list length of zero indicates that no data shall be transferred. This condition shall not be considered as an error.

The target shall terminate the command with CHECK CONDITION status if the parameter list length results in the truncation of any mode parameter header, mode parameter block descriptor(s), or mode page. The sense key shall be set to ILLEGAL REQUEST, and the additional sense code shall be set to PARAMETER LIST LENGTH ERROR.

The mode parameter list for the MODE SELECT and MODE SENSE commands is defined in 8.3.3. Parts of each mode parameter list are uniquely defined for each device-type.

The target shall terminate the MODE SELECT command with CHECK CONDITION status, set the sense key to ILLEGAL REQUEST, set the additional sense code to INVALID FIELD IN PARAMETER LIST, and shall not change any mode parameters for the following conditions:

a) If the initiator sets any field that is reported as not changeable by the target to a value other than its current value.
b) If the initiator sets any field in the mode parameter header or block descriptor(s) to an unsupported value.
c) If an initiator sends a mode page with a page length not equal to the page length returned by the MODE SENSE command for that page.
d) If the initiator sends a unsupported value for a mode parameter and rounding is not implemented for that mode parameter.
e) If the initiator sets any reserved field in the mode parameter list to a non-zero value.

If the initiator sends a value for a mode parameter that is outside the range supported by the target and rounding is implemented for that mode parameter, the target may either:

a) round the parameter to an acceptable value and terminate the command as described in 7.5.4;
b) terminate the command with CHECK CONDITION status, the sense key set to ILLEGAL REQUEST, and set the additional sense code to INVALID FIELD IN PARAMETER LIST.

A target may alter any mode parameter in any mode page (even those reported as non-changeable) as a result of changes to other mode parameters.

The target validates the non-changeable mode parameters against the current values that existed for those mode parameters prior to the MODE SELECT command.

NOTE 74 If the current values calculated by the target affect the initiator's operation, the initiator should issue a MODE SENSE command after each MODE SELECT command.

Copyright International Organization for Standardization
Provided by IHS under license with ISO
No reproduction or networking permitted without license from IHS Not for Resale

8.2.9 MODE SELECT(10) command

The MODE SELECT(10) command (see table 53) provides a means for the initiator to specify medium, logical unit, or peripheral device parameters to the target. See the MODE SELECT(6) command (8.2.8) for a description of the fields in this command. Initiators should issue MODE SENSE prior to each MODE SELECT to determine supported mode pages, mode page lengths, and other parameters.

Table 53 - MODE SELECT(10) command

Bit / Byte	7	6	5	4	3	2	1	0
0	Operation code (55h)							
1	Logical unit number			PF	Reserved			SP
2	Reserved							
3	Reserved							
4	Reserved							
5	Reserved							
6	Reserved							
7	(MSB) Parameter list length							
8								(LSB)
9	Control							

Targets that implement the MODE SELECT(10) command shall also implement the MODE SENSE(10) command.

8.2.10 MODE SENSE(6) command

The MODE SENSE(6) command (see table 54) provides a means for a target to report parameters to the initiator. It is a complementary command to the MODE SELECT(6) command.

Table 54 - MODE SENSE(6) command

Bit / Byte	7	6	5	4	3	2	1	0
0	Operation code (1Ah)							
1	Logical unit number			Reserved	DBD	Reserved		
2	PC		Page code					
3	Reserved							
4	Allocation length							
5	Control							

A disable block descriptors (DBD) bit of zero indicates that the target may return zero or more block descriptors in the returned MODE SENSE data (see 8.3.3), at the target's discretion. A DBD bit of one specifies that the target shall not return any block descriptors in the returned MODE SENSE data.

The page control (PC) field defines the type of mode parameter values to be returned in the mode pages. The page control field is defined in table 55.

Copyright International Organization for Standardization
Provided by IHS under license with ISO
No reproduction or networking permitted without license from IHS Not for Resale

Table 55 - Page control field

Code	Type of parameter	Subclause
00b	Current values	8.2.10.1
01b	Changeable values	8.2.10.2
10b	Default values	8.2.10.3
11b	Saved values	8.2.10.4

NOTE 75 The page control field only affects the mode parameters within the mode pages, however the PS bit, page code and page length fields should return current values since they have no meaning when used with other types. The mode parameter header and mode parameter block descriptor should return current values.

The page code specifies which mode page(s) to return. Mode page code usage is defined in table 56.

Table 56 - Mode page code usage for all devices

Page code	Description	Subclause
00h	Vendor-specific (does not require page format)	
01h - 1Fh	See specific device-types	
20h - 3Eh	Vendor-specific (page format required)	
3Fh	Return all mode pages	

An initiator may request any one or all of the supported mode pages from a target. If an initiator issues a MODE SENSE command with a page code value not implemented by the target, the target shall return CHECK CONDITION status and shall set the sense key to ILLEGAL REQUEST and the additional sense code to INVALID FIELD IN CDB.

A page code of 3Fh indicates that all mode pages implemented by the target shall be returned to the initiator. If the mode parameter list exceeds 256 bytes for a MODE SENSE(6) command or 65 536 bytes for a MODE SENSE(10) command, the target shall return CHECK CONDITION status and the sense key shall be set to ILLEGAL REQUEST and the additional sense code set to INVALID FIELD IN CDB.

Mode page 00h, if implemented, shall be returned after all other mode pages.

NOTES
76 Mode pages should be returned in ascending page code order except for mode page 00h.
77 If the PC field and the page code field are both set to zero the target should return a mode parameter header and block descriptor (if applicable). This provides for compatibility with existing SCSI-1 initiators.

The mode parameter list for all device types for MODE SELECT and MODE SENSE is defined in 8.3.3. Parts of the mode parameter list are specifically defined for each device type. See subclause three of each peripheral device type for further information.

8.2.10.1 Current values

A PC field value of 0h requests that the target return the current values of the mode parameters. The current values returned are:

a) the current values of the mode parameters established by last successful MODE SELECT command;
b) the saved values of the mode parameters if a MODE SELECT command has not successfully completed since the last power-on, hard RESET condition, or BUS DEVICE RESET message;
c) the default values of the mode parameters, if saved values are not available or not supported.

Copyright International Organization for Standardization
Provided by IHS under license with ISO
No reproduction or networking permitted without license from IHS Not for Resale

8.2.10.2 Changeable values

A PC field value of 1h requests that the target return a mask denoting those mode parameters that are changeable. In the mask, the fields of the mode parameters that are changeable shall be set to all one bits and the fields of the mode parameters that are non-changeable (i.e. defined by the target) shall be set to all zero bits.

NOTES
78 An attempt to change a non-changeable mode parameter (via MODE SELECT) results in an error condition (see 8.2.8).
79 The initiator should issue a MODE SENSE command with the PC field set to 1h and the page code field set to 3Fh to determine which mode pages are supported, which mode parameters within the mode pages are changeable, and the supported length of each mode page prior to issuing any MODE SELECT commands.

8.2.10.3 Default values

A PC field value of 2h requests that the target return the default values of the mode parameters. Parameters not supported by the target shall be set to zero. Default values are accessible even if the device is not ready.

8.2.10.4 Saved values

A PC field value of 3h requests that the target return the saved values of the mode parameters. Implementation of saved page parameters is optional. Mode parameters not supported by the target shall be set to zero. If saved values are not implemented, the command shall be terminated with CHECK CONDITION status, the sense key set to ILLEGAL REQUEST and the additional sense code set to SAVING PARAMETERS NOT SUPPORTED.

NOTE 80 The method of saving parameters is vendor-specific. The parameters are preserved in such a manner that they are retained when the target is powered down. All savable pages can be considered saved when a MODE SELECT command issued with the SP bit set to one has returned a GOOD status or after the successful completion of a FORMAT UNIT command.

8.2.10.5 Initial responses

After a power-up condition or hard reset condition, the target shall respond in the following manner:

a) If default values are requested, report the default values.
b) If saved values are requested, report valid restored mode parameters, or restore the mode parameters and report them. If the saved values of the mode parameters are not able to be accessed from the non-volatile vendor-specific location, terminate the command with CHECK CONDITION status and set the sense key set to NOT READY. If saved parameters are not implemented respond as defined in 8.2.10.4.
c) If current values are requested and the current values of the mode parameters have not been sent by the initiator (via a MODE SELECT command), the target may return either the default or saved values, as defined above. If current values have been sent, the current values shall be reported.

Copyright International Organization for Standardization
Provided by IHS under license with ISO
No reproduction or networking permitted without license from IHS Not for Resale

8.2.11 MODE SENSE(10) command

The MODE SENSE(10) command (see table 57) provides a means for a target to report parameters to the initiator. It is a complementary command to the MODE SELECT(10) command. If the MODE SELECT(10) command is implemented the MODE SENSE(10) command shall be implemented. See the MODE SENSE(6) command for a description of the fields in this command.

Table 57 - MODE SENSE(10) command

Bit / Byte	7	6	5	4	3	2	1	0
0	Operation code (5Ah)							
1	Logical unit number			Reserved	DBD	Reserved		
2	PC		Page code					
3	Reserved							
4	Reserved							
5	Reserved							
6	Reserved							
7	(MSB) Allocation length							
8	(LSB)							
9	Control							

8.2.12 READ BUFFER command

The READ BUFFER command (see table 58) is used in conjunction with the WRITE BUFFER command as a diagnostic function for testing target memory and the SCSI bus integrity. This command shall not alter the medium.

Table 58 - READ BUFFER command

Bit / Byte	7	6	5	4	3	2	1	0
0	Operation code (3Ch)							
1	Logical unit number			Reserved		Mode		
2	Buffer ID							
3	(MSB) Buffer offset							
4	Buffer offset							
5	(LSB)							
6	(MSB) Allocation length							
7	Allocation length							
8	(LSB)							
9	Control							

The function of this command and the meaning of fields within the command descriptor block depend on the contents of the mode field. The mode field is defined in table 59.

Copyright International Organization for Standardization
Provided by IHS under license with ISO
No reproduction or networking permitted without license from IHS Not for Resale

Table 59 - READ BUFFER mode field

Mode	Description	Type
000b	Combined header and data	Optional
001b	Vendor-specific	Vendor-specific
010b	Data	Optional
011b	Descriptor	Optional
100b	Reserved	Reserved
101b	Reserved	Reserved
110b	Reserved	Reserved
111b	Reserved	Reserved

NOTE 81 Modes 000b and 001b are included for compatibility with products that were designed prior to the generation of this International Standard. Some products that were designed prior to the generation of this International Standard restrict the available length to 65 535 bytes.

8.2.12.1 Combined header and data mode (000b)

In this mode, a four-byte header followed by data bytes is returned to the initiator during the DATA IN phase. The buffer ID and the buffer offset fields are reserved.

The four-byte READ BUFFER header (see table 60) is followed by data bytes from the target's data buffer.

Table 60 - READ BUFFER header

Bit / Byte	7	6	5	4	3	2	1	0
0	Reserved							
1	(MSB)							
				Buffer capacity				
3								(LSB)

The buffer capacity field specifies the total number of data bytes available in the target's data buffer. This number is not reduced to reflect the allocation length; nor is it reduced to reflect the actual number of bytes written using the WRITE BUFFER command. Following the READ BUFFER header, the target shall transfer data from its data buffer. The target terminates the DATA IN phase when allocation length bytes of header plus data have been transferred or when all available header and buffer data have been transferred to the initiator, whichever is less.

8.2.12.2 Vendor-specific mode (001b)

In this mode, the meanings of the buffer ID, buffer offset, and allocation length fields are not specified by this International Standard.

8.2.12.3 Data mode (010b)

In this mode, the DATA IN phase contains buffer data. The buffer ID field identifies a specific buffer within the target from which data shall be transferred. The vendor assigns buffer ID codes to buffers within the target. Buffer ID zero shall be supported. If more than one buffer is supported, additional buffer ID codes shall be assigned contiguously, beginning with one. Buffer ID code assignments for the READ BUFFER command shall be the same as for the WRITE BUFFER command. If an unsupported buffer ID code is selected, the target shall return CHECK CONDITION status, shall set the sense key to ILLEGAL REQUEST, and set the additional sense code to ILLEGAL FIELD IN CDB. The target terminates the DATA IN phase when allocation length bytes have been transferred or when all the available data from the buffer has been transferred to the initiator, whichever amount is less.

Copyright International Organization for Standardization
Provided by IHS under license with ISO
No reproduction or networking permitted without license from IHS Not for Resale

The buffer offset field contains the byte offset within the specified buffer from which data shall be transferred from. The initiator should conform to the offset boundary requirements returned in the READ BUFFER descriptor (see 8.2.12.4). If the target is unable to accept the specified buffer offset, it shall return CHECK CONDITION status, shall set the sense key to ILLEGAL REQUEST, and set the additional sense code to ILLEGAL FIELD IN CDB.

8.2.12.4 Descriptor mode (011b)

In this mode, a maximum of four bytes of READ BUFFER descriptor information is returned. The target shall return the descriptor information for the buffer specified by the buffer ID (see the description of the buffer ID in 8.2.12.3). If there is no buffer associated with the specified buffer ID, the target shall return all zeros in the READ BUFFER descriptor. The buffer offset field is reserved in this mode. The allocation length should be set to four or greater. The target shall transfer the lesser of the allocation length or four bytes of READ BUFFER descriptor. The READ BUFFER descriptor is defined as shown in table 61.

Table 61 - READ BUFFER descriptor

Bit / Byte	7	6	5	4	3	2	1	0
0	Offset boundary							
1	(MSB)							
	Buffer capacity							
3								(LSB)

The offset boundary field returns the boundary alignment within the selected buffer for subsequent WRITE BUFFER and READ BUFFER commands. The value contained in the offset boundary field shall be interpreted as a power of two.

The value contained in the buffer offset field of subsequent WRITE BUFFER and READ BUFFER commands should be a multiple of $2^{\text{offset boundary}}$ as shown in table 62.

Table 62 - Buffer offset boundary

Offset boundary	2**Offset boundary	Buffer offsets
0	2**0 = 1	Byte boundaries
1	2**1 = 2	Even-byte boundaries
2	2**2 = 4	Four-byte boundaries
3	2**3 = 8	Eight-byte boundaries
4	2**4 = 16	16-byte boundaries
.	.	.
.	.	.
FFh	Not applicable	0 is the only supported buffer offset.

The buffer capacity field shall return the size of the selected buffer in bytes.

NOTE 82 In a multi-tasking system, a buffer may be altered between the WRITE BUFFER and READ BUFFER commands by another task. Buffer testing applications may wish to ensure that only a single task is active. Use of reservations (to all logical units on the device) or linked commands may also be helpful in avoiding buffer alteration between these two commands.

Copyright International Organization for Standardization
Provided by IHS under license with ISO
No reproduction or networking permitted without license from IHS Not for Resale

8.2.13 RECEIVE DIAGNOSTIC RESULTS command

The RECEIVE DIAGNOSTIC RESULTS command (see table 63) requests analysis data be sent to the initiator after completion of a SEND DIAGNOSTIC command (see 8.2.15). If the target supports the optional page format, the page code field sent in the previous SEND DIAGNOSTIC command specifies the format of the returned data.

Table 63 - RECEIVE DIAGNOSTIC RESULTS command

Bit / Byte	7	6	5	4	3	2	1	0
0	Operation code (1Ch)							
1	Logical unit number			Reserved				
2	Reserved							
3	(MSB) Allocation length							
4								(LSB)
5	Control							

NOTES

83 To ensure that the diagnostic command information is not destroyed by a command sent from another initiator, either the SEND DIAGNOSTIC command should either be linked to the RECEIVE DIAGNOSTIC RESULTS command or the logical unit should be reserved.

84 Although diagnostic software is generally device-specific, this command and the SEND DIAGNOSTIC command provide a means to isolate the operating system software from the device-specific diagnostic software. Hence, the operating system can remain device-independent. This also allows diagnostic software to be transferred more easily to other operating systems.

See 8.3.1 for RECEIVE DIAGNOSTIC RESULTS page format definitions.

8.2.14 REQUEST SENSE command

The REQUEST SENSE command (see table 64) requests that the target transfer sense data to the initiator.

Table 64 - REQUEST SENSE command

Bit / Byte	7	6	5	4	3	2	1	0
0	Operation code (03h)							
1	Logical unit number			Reserved				
2	Reserved							
3	Reserved							
4	Allocation length							
5	Control							

The sense data:

a) shall be available if a contingent allegiance condition exists for the I_T_x nexus;
b) shall be available if other information (e.g. medium position) is available in any field;
c) may be available if an unexpected disconnect occurred.

Copyright International Organization for Standardization
Provided by IHS under license with ISO
No reproduction or networking permitted without license from IHS Not for Resale

If the target has no other sense data available to return, it shall return a sense key of NO SENSE and an additional sense code of NO ADDITIONAL SENSE INFORMATION.

The sense data shall be preserved by the target for the initiator until retrieved by a REQUEST SENSE command or until the receipt of any other I/O process for the same I_T_x nexus. Sense data shall be cleared upon receipt of any subsequent I/O process (including REQUEST SENSE) to the same I_T_x nexus.

NOTE 85 Some target implementations do not update sense data except on commands that return CHECK CONDITION or COMMAND TERMINATED status. Thus when polling for a logical unit to become ready, the initiator should issue TEST UNIT READY commands until GOOD status is returned. If desired, the initiator may issue REQUEST SENSE commands after the TEST UNIT READY commands that return CHECK CONDITION or COMMAND TERMINATED status to obtain the sense data.

The target shall return CHECK CONDITION status for a REQUEST SENSE command only to report exception conditions specific to the command itself. For example:

a) A non-zero reserved bit is detected in the command descriptor block;
b) An unrecovered parity error is detected on the data bus;
c) A target malfunction prevents return of the sense data.

If a recovered error occurs during the execution of the REQUEST SENSE command, the target shall return the sense data with GOOD status. If a target returns CHECK CONDITION status for a REQUEST SENSE command, the sense data may be invalid.

NOTE 86 The sense data appropriate to the selection of an invalid logical unit is defined in 7.5.3.

Targets shall be capable of returning eighteen bytes of data in response to a REQUEST SENSE command. If the allocation length is eighteen or greater, and a target returns less than eighteen bytes of data, the initiator should assume that the bytes not transferred would have been zeros had the target returned those bytes. Initiators can determine how much sense data has been returned by examining the allocation length parameter in the command descriptor block and the additional sense length in the sense data. Targets shall not adjust the additional sense length to reflect truncation if the allocation length is less than the sense data available.

The sense data format for error codes 70h (current errors) and 71h (deferred errors) are defined in table 65. Error code values of 72h to 7Eh are reserved. Error code 7Fh is for a vendor-specific sense data format. Targets shall implement error code 70h; implementation of error code 71h is optional. Error code values of 00h to 6Fh are not defined by this International Standard and their use is not recommended.

--`,,```,,,,````-`-`,,`,,`,`,,`---
Copyright International Organization for Standardization
Provided by IHS under license with ISO
No reproduction or networking permitted without license from IHS Not for Resale

Table 65 - Error codes 70h and 71h sense data format

Bit / Byte	7	6	5	4	3	2	1	0
0	Valid	Error code (70h or 71h)						
1	Segment number							
2	Filemark	EOM	ILI	Reserved	Sense key			
3	(MSB)	Information						
6								(LSB)
7	Additional sense length (n-7)							
8	(MSB)	Command-specific information						
11								(LSB)
12	Additional sense code							
13	Additional sense code qualifier							
14	Field replaceable unit code							
15	SKSV	Sense-key specific						
17								
18	Additional sense bytes							
n								

A valid bit of zero indicates that the information field is not as defined in this International Standard. A valid bit of one indicates the information field contains valid information as defined in this International Standard. Targets shall implement the valid bit.

The segment number field contains the number of the current segment descriptor if the REQUEST SENSE command is in response to a COPY, COMPARE, or COPY AND VERIFY command. Up to 256 segments are supported, beginning with segment zero.

The filemark bit is mandatory for sequential-access devices, and this bit is reserved for all other device types. A filemark bit of one indicates that the current command has read a filemark or setmark. The additional sense code field may be used to indicate whether a filemark or setmark was read. Reporting of setmarks is optional and indicated by the Rsmk bit for sequential-access devices in the configuration parameters page (see 10.3.3.1).

The end-of-medium (EOM) bit is mandatory for sequential-access and printer devices, and this bit is reserved for all other device types. An EOM bit of one indicates that an end-of-medium condition (end-of-partition, beginning-of-partition, out-of-paper, etc.) exists. For sequential-access devices, this bit indicates that the unit is at or past the early-warning if the direction was forward, or that the command could not be completed because beginning-of-partition was encountered if the direction was reverse.

An incorrect length indicator (ILI) bit of one usually indicates that the requested logical block length did not match the logical block length of the data on the medium.

The sense key, additional sense code and additional sense code qualifier provide a hierarchy of information. The intention of the hierarchy is to provide a top-down approach for an initiator to determine information relating to the error and exception conditions. The sense key provides generic categories in which error and exception conditions can be reported. Initiators would typically use sense keys for high level error recovery procedures. Additional sense codes provide further detail describing the sense key. Additional sense code qualifiers add further detail to the

--`,,```,,,,````-`-`,,`,,`,`,,`---

Copyright International Organization for Standardization
Provided by IHS under license with ISO
No reproduction or networking permitted without license from IHS Not for Resale

additional sense code. The additional sense code and additional sense code qualifier can be used by initiators where sophisticated error recovery procedures require detailed information describing the error and exception conditions.

The sense key field is mandatory and indicates generic information describing an error or exception condition. The sense keys are defined in 8.2.14.3.

The contents of the information field is device-type or command specific and is defined within the appropriate clause for the device type or command of interest. Targets shall implement the information field. Unless specified otherwise, this field contains:

a) the unsigned logical block address associated with the sense key, for direct-access devices (device type 0), write-once devices (device type 4), CD-ROM devices (device type 5), and optical memory devices (device type 7).
b) the difference (residue) of the requested length minus the actual length in either bytes or blocks, as determined by the command, for sequential-access devices (device type 1), printer devices (device type 2), processor devices (device type 3) and some direct access device commands, except as defined for d) below. (Negative values are indicated by two's complement notation.)
c) the difference (residue) of the requested number of blocks minus the actual number of blocks copied or compared for the current segment descriptor of a COPY, COMPARE, or COPY AND VERIFY command.
d) For sequential-access devices operating in buffered modes 1h or 2h that detect an unrecoverable write error when unwritten data blocks, filemarks, or setmarks remain in the buffer, the value of the information field for all commands shall be:
    1) the total number of data blocks, filemarks, and setmarks in the buffer if the device is in fixed block mode (block length field of the MODE SENSE block descriptor is non-zero and the fixed bit of the WRITE command is one).
    2) the number of bytes in the buffer, including filemarks and setmarks, if the device is in variable mode (the fixed bit of the WRITE command is zero).

The additional sense length field indicates the number of additional sense bytes to follow. If the allocation length of the command descriptor block is too small to transfer all of the additional sense bytes, the additional sense length is not adjusted to reflect the truncation.

The command-specific information field contains information that depends on the command that was executed. Further meaning for this field is defined within the command description. The command-specific information field is mandatory if the target supports any of the following commands: COPY, COMPARE, COPY AND VERIFY, SEARCH DATA, and REASSIGN BLOCKS.

The additional sense code (ASC) field indicates further information related to the error or exception condition reported in the sense key field. Targets shall support the additional sense code field. Support of the additional sense codes not explicitly required by this International Standard is optional. A list of additional sense codes is in 8.2.14.3. If the target does not have further information related to the error or exception condition, the additional sense code is set to NO ADDITIONAL SENSE INFORMATION.

The additional sense code qualifier (ASCQ) indicates detailed information related to the additional sense code. The additional sense code qualifier is optional. If the error or exception condition is reportable by the device, the value returned shall be as specified in 8.2.14.3. If the target does not have detailed information related to the error or exception condition, the additional sense code qualifier is set to zero.

Non-zero values in the field replaceable unit code field are used to define a device-specific mechanism or unit that has failed. A value of zero in this field shall indicate that no specific mechanism or unit has been identified to have failed or that the data is not available. The field replaceable unit code field is optional. The format of this information is not specified by this International Standard. Additional information about the field replaceable unit may be available in the ISO/IEC 646 information page (see 8.3.4.2), if supported by the target.

The sense-key specific bytes are described in 8.2.14.1, below.

Copyright International Organization for Standardization
Provided by IHS under license with ISO
No reproduction or networking permitted without license from IHS Not for Resale

The additional sense bytes field may contain command specific data, peripheral device specific data, or vendor-specific data that further defines the nature of the CHECK CONDITION status.

8.2.14.1 Sense-key specific

The sense-key specific field as defined by this International Standard when the value of the sense-key specific valid (SKSV) bit is one. The sense-key specific valid bit and sense-key specific field are optional. The definition of this field is determined by the value of the sense key field. This field is reserved for sense keys not described below. An SKSV value of zero indicates that this field is not as defined by this International Standard.

If the sense key field is set to ILLEGAL REQUEST and the SKSV bit is set to one, the sense-key specific field shall be as defined as shown in table 66. The field pointer field indicates which illegal parameters in the command descriptor block or the data parameters are in error.

Table 66 - Field pointer bytes

Bit / Byte	7	6	5	4	3	2	1	0
15	SKSV	C/D	Reserved	Reserved	BPV	Bit pointer		
16	(MSB)	Field pointer						
17								(LSB)

A command data (C/D) bit of one indicates that the illegal parameter is in the command descriptor block. A C/D bit of zero indicates that the illegal parameter is in the data parameters sent by the initiator during the DATA OUT phase.

A bit pointer valid (BPV) bit of zero indicates that the value in the bit pointer field is not valid. A BPV bit of one indicates that the bit pointer field specifies which bit of the byte designated by the field pointer field is in error. When a multiple-bit field is in error, the bit pointer field shall point to the most-significant (left-most) bit of the field.

The field pointer field indicates which byte of the command descriptor block or of the parameter data was in error. Bytes are numbered starting from zero, as shown in the tables describing the commands and parameters. When a multiple-byte field is in error, the pointer shall point to the most- significant (left-most) byte of the field.

NOTE 87 Bytes identified as being in error are not necessarily the place that has to be changed to correct the problem.

If the sense key is RECOVERED ERROR, HARDWARE ERROR or MEDIUM ERROR and if the SKSV bit is one, the sense-key specific field shall be as shown in table 67.

Table 67 - Actual retry count bytes

Bit / Byte	7	6	5	4	3	2	1	0
15	SKSV	Reserved						
16	(MSB)	Actual retry count						
17								(LSB)

The actual retry count field returns implementation-specific information on the actual number of retries of the recovery algorithm used in attempting to recover an error or exception condition.

NOTE 88 This field should relate to the retry count fields within the error recovery page of the MODE SELECT command.

Copyright International Organization for Standardization
Provided by IHS under license with ISO
No reproduction or networking permitted without license from IHS Not for Resale

If the sense key is NOT READY and the SKSV bit is one, the sense-key specific field shall be as shown in table 68. These fields only apply to the FORMAT UNIT command with the Immed bit set to one.

Table 68 - Format progress indication bytes

Bit / Byte	7	6	5	4	3	2	1	0
15	SKSV	Reserved						
16	(MSB)	Progress indication						
17								(LSB)

The progress indication field is a percent complete indication in which the returned value is the numerator that has 65 536 (10000h) as its denominator. The progress indication shall be based upon the total format operation including any certification or initialization operations.

NOTE 89 It is intended that the progress indication be time related. However, since format time varies with the number of defects encountered, etc., it is reasonable for the target to assign values to various steps within the process. The granularity of these steps should be small enough to provide reasonable assurances to the initiator that progress is being made.

8.2.14.2 Deferred errors

Error code 70h indicates that the CHECK CONDITION or COMMAND TERMINATED status returned is the result of an error or exception condition on the I/O process that returned the CHECK CONDITION or COMMAND TERMINATED status or an unexpected disconnect. This includes errors generated during execution of the command by the actual execution process. It also includes errors not related to any command that are first observed during execution of a command. Examples of this latter type of error include disk servo-mechanism, off-track errors, and power-up test errors.

Error code 71h (deferred error) indicates that the CHECK CONDITION status returned is the result of an error or exception condition that occurred during execution of a previous command for which GOOD status has already been returned. Such commands are associated with use of the immediate bit, with some forms of caching, and with multiple command buffering. Targets that implement these features are required to implement deferred error reporting.

The deferred error indication may be sent at a time selected by the target through the asynchronous event notification process (see 7.5.5) if AEN is supported by both the initiator and target.

If AEN is not supported, the deferred error may be indicated by returning CHECK CONDITION status to the appropriate initiator as described below. The subsequent execution of a REQUEST SENSE command shall return the deferred error sense information.

If an I/O process terminates with CHECK CONDITION status and the subsequent sense data returns a deferred error that I/O process shall not have been executed. After the target detects a deferred error condition on a logical unit, it shall return a deferred error according to the rules described below:

a) If a deferred error can be recovered with no external system intervention, a deferred error indication shall not be posted unless required by the error handling parameters of the MODE SELECT command. The occurrence of the error may be logged if statistical or error logging is supported.
b) If a deferred error can be associated with a causing initiator and with a particular function or a particular subset of data, and the error is either unrecovered or required to be reported by the mode parameters, a deferred error indication shall be returned to the causing initiator. If an initiator other than the causing initiator attempts access to the particular function or subset of data associated with the deferred error, a BUSY status shall be returned to that initiator in response to the command attempting the access.

--`,,```,,,,````-`-`,,`,,`,`,,`---

Copyright International Organization for Standardization
Provided by IHS under license with ISO
No reproduction or networking permitted without license from IHS Not for Resale

NOTE 90 Not all devices may be sufficiently sophisticated to identify the function or data that failed. Those that cannot should treat the error in the following manner.

c) If a deferred error cannot be associated with a causing initiator or with a particular subset of data, a deferred error indication shall be returned on behalf of the failing logical unit to each initiator. If multiple deferred errors have accumulated for some initiators, only the last error shall be returned.
d) If a deferred error cannot be associated with a particular logical unit, it shall be returned to the appropriate initiator for all logical units supported by the target.
e) If a current command has not yet started executing, and a deferred error occurs, the command shall be terminated with CHECK CONDITION status and deferred error information posted in the sense data. By convention, the current command is considered to have started execution if the target has changed phase from the COMMAND phase to the next normal phase of the command sequence. If a deferred error occurs while a current command is executing and the current command has been affected by the error, the command shall be terminated by CHECK CONDITION status and current error information shall be returned in the sense data. In this case, if the current error information does not adequately define the deferred error condition, a deferred error may be returned after the current error information has been recovered. If a deferred error occurs while a current command is executing and the current command completes successfully, the target may choose to return the deferred error information after the completion of the current command.

NOTE 91 Deferred errors may indicate that an operation was unsuccessful long after the command performing the data transfer returned GOOD status. If data that cannot be replicated or recovered from other sources is being stored using buffered write operations, synchronization commands should be performed before the critical data is destroyed in the host initiator. This is necessary to be sure that recovery actions can be taken if deferred errors do occur in the storing of the data. If AEN is not implemented, the synchronizing process should provide the necessary commands to allow returning CHECK CONDITION status and subsequent returning of deferred error sense information after all buffered operations are guaranteed to be complete.

Copyright International Organization for Standardization
Provided by IHS under license with ISO
No reproduction or networking permitted without license from IHS Not for Resale

8.2.14.3 Sense key and sense code definitions

The sense keys are defined in tables 69 and 70.

Table 69 - Sense key (0h-7h) descriptions

Sense key	Description
0h	NO SENSE. Indicates that there is no specific sense key information to be reported for the designated logical unit. This would be the case for a successful command or a command that received CHECK CONDITION or COMMAND TERMINATED status because one of the filemark, EOM, or ILI bits is set to one.
1h	RECOVERED ERROR. Indicates that the last command completed successfully with some recovery action performed by the target. Details may be determinable by examining the additional sense bytes and the information field. When multiple recovered errors occur during one command, the choice of which error to report (first, last, most severe, etc.) is device specific.
2h	NOT READY. Indicates that the logical unit addressed cannot be accessed. Operator intervention may be required to correct this condition.
3h	MEDIUM ERROR. Indicates that the command terminated with a non-recovered error condition that was probably caused by a flaw in the medium or an error in the recorded data. This sense key may also be returned if the target is unable to distinguish between a flaw in the medium and a specific hardware failure (sense key 4h).
4h	HARDWARE ERROR. Indicates that the target detected a non-recoverable hardware failure (for example, controller failure, device failure, parity error, etc.) while performing the command or during a self test.
5h	ILLEGAL REQUEST. Indicates that there was an illegal parameter in the command descriptor block or in the additional parameters supplied as data for some commands (FORMAT UNIT, SEARCH DATA, etc.). If the target detects an invalid parameter in the command descriptor block, then it shall terminate the command without altering the medium. If the target detects an invalid parameter in the additional parameters supplied as data, then the target may have already altered the medium. This sense key may also indicate that an invalid IDENTIFY message was received (6.6.7).
6h	UNIT ATTENTION. Indicates that the removable medium may have been changed or the target has been reset. See 7.9 for more detailed information about the unit attention condition.
7h	DATA PROTECT. Indicates that a command that reads or writes the medium was attempted on a block that is protected from this operation. The read or write operation is not performed.

Copyright International Organization for Standardization
Provided by IHS under license with ISO
No reproduction or networking permitted without license from IHS Not for Resale

Table 70 - Sense key (8h-Fh) descriptions

Sense key	Description
8h	BLANK CHECK. Indicates that a write-once device or a sequential-access device encountered blank medium or format-defined end-of-data indication while reading or a write-once device encountered a non-blank medium while writing.
9h	VENDOR-SPECIFIC. This sense key is available for reporting vendor specific conditions.
Ah	COPY ABORTED. Indicates a COPY, COMPARE, or COPY AND VERIFY command was aborted due to an error condition on the source device, the destination device, or both. (See 8.2.3.2 for additional information about this sense key.)
Bh	ABORTED COMMAND. Indicates that the target aborted the command. The initiator may be able to recover by trying the command again.
Ch	EQUAL. Indicates a SEARCH DATA command has satisfied an equal comparison.
Dh	VOLUME OVERFLOW. Indicates that a buffered peripheral device has reached the end-of-partition and data may remain in the buffer that has not been written to the medium. A RECOVER BUFFERED DATA command(s) may be issued to read the unwritten data from the buffer.
Eh	MISCOMPARE. Indicates that the source data did not match the data read from the medium.
Fh	RESERVED.

Copyright International Organization for Standardization
Provided by IHS under license with ISO
No reproduction or networking permitted without license from IHS Not for Resale

The additional sense codes and additional sense code qualifiers are defined in table 71.

Table 71 - ASC and ASCQ assignments

```
            D - DIRECT ACCESS DEVICE
            .T - SEQUENTIAL ACCESS DEVICE
            . L - PRINTER DEVICE
            .  P - PROCESSOR DEVICE
            .  .W - WRITE ONCE READ MULTIPLE DEVICE
            .  . R - READ ONLY (CD-ROM) DEVICE
            .  .  S - SCANNER DEVICE
            .  .  .O - OPTICAL MEMORY DEVICE
            .  .  . M - MEDIA CHANGER DEVICE
            .  .  .  C - COMMUNICATION DEVICE
            .  .  .  .
ASC  ASCQ   DTLPWRSOMC  DESCRIPTION
---  ----   ---------- -----------------------------------------------------------
13h  00h    D   W  O   ADDRESS MARK NOT FOUND FOR DATA FIELD
12h  00h    D   W  O   ADDRESS MARK NOT FOUND FOR ID FIELD
00h  11h        R      AUDIO PLAY OPERATION IN PROGRESS
00h  12h        R      AUDIO PLAY OPERATION PAUSED
00h  14h        R      AUDIO PLAY OPERATION STOPPED DUE TO ERROR
00h  13h        R      AUDIO PLAY OPERATION SUCCESSFULLY COMPLETED
00h  04h     T    S    BEGINNING-OF-PARTITION/MEDIUM DETECTED
14h  04h     T         BLOCK SEQUENCE ERROR
30h  02h    DT  WR O   CANNOT READ MEDIUM - INCOMPATIBLE FORMAT
30h  01h    DT  WR O   CANNOT READ MEDIUM - UNKNOWN FORMAT
52h  00h     T         CARTRIDGE FAULT
3Fh  02h    DTLPWRSOMC CHANGED OPERATING DEFINITION
11h  06h       WR O    CIRC UNRECOVERED ERROR
30h  03h    DT         CLEANING CARTRIDGE INSTALLED
4Ah  00h    DTLPWRSOMC COMMAND PHASE ERROR
2Ch  00h    DTLPWRSOMC COMMAND SEQUENCE ERROR
2Fh  00h    DTLPWRSOMC COMMANDS CLEARED BY ANOTHER INITIATOR
2Bh  00h    DTLPWRSO C COPY CANNOT EXECUTE SINCE HOST CANNOT DISCONNECT
41h  00h    D          DATA PATH FAILURE (SHOULD USE 40 NN)
4Bh  00h    DTLPWRSOMC DATA PHASE ERROR
11h  07h       W  O    DATA RESYNCHRONIZATION ERROR
16h  00h    D  W  O    DATA SYNCHRONIZATION MARK ERROR
19h  00h    D     O    DEFECT LIST ERROR
19h  03h    D     O    DEFECT LIST ERROR IN GROWN LIST
19h  02h    D     O    DEFECT LIST ERROR IN PRIMARY LIST
19h  01h    D     O    DEFECT LIST NOT AVAILABLE
1Ch  00h    D     O    DEFECT LIST NOT FOUND
32h  01h    D  W  O    DEFECT LIST UPDATE FAILURE
40h  NNh    DTLPWRSOMC DIAGNOSTIC FAILURE ON COMPONENT NN (80H-FFH)
63h  00h       R       END OF USER AREA ENCOUNTERED ON THIS TRACK
00h  05h     T    S    END-OF-DATA DETECTED
14h  03h     T         END-OF-DATA NOT FOUND
00h  02h     T    S    END-OF-PARTITION/MEDIUM DETECTED
51h  00h     T     O   ERASE FAILURE
0Ah  00h    DTLPWRSOMC ERROR LOG OVERFLOW
11h  02h    DT  W SO   ERROR TOO LONG TO CORRECT
03h  02h     T         EXCESSIVE WRITE ERRORS
3Bh  07h      L        FAILED TO SENSE BOTTOM-OF-FORM
3Bh  06h      L        FAILED TO SENSE TOP-OF-FORM
00h  01h     T         FILEMARK DETECTED
14h  02h     T         FILEMARK OR SETMARK NOT FOUND
09h  02h       WR O    FOCUS SERVO FAILURE
31h  01h    D L   O    FORMAT COMMAND FAILED
58h  00h          O    GENERATION DOES NOT EXIST
```


Copyright International Organization for Standardization
Provided by IHS under license with ISO
No reproduction or networking permitted without license from IHS Not for Resale

Table 71 (continued)

ASC	ASCQ	DTLPWRSOMC	DESCRIPTION
1Ch	02h	D O	GROWN DEFECT LIST NOT FOUND
00h	06h	DTLPWRSOMC	I/O PROCESS TERMINATED
10h	00h	D W O	ID CRC OR ECC ERROR
22h	00h	D	ILLEGAL FUNCTION (SHOULD USE 20 00, 24 00, OR 26 00)
64h	00h	R	ILLEGAL MODE FOR THIS TRACK
28h	01h	M	IMPORT OR EXPORT ELEMENT ACCESSED
30h	00h	DT WR OM	INCOMPATIBLE MEDIUM INSTALLED
11h	08h	T	INCOMPLETE BLOCK READ
48h	00h	DTLPWRSOMC	INITIATOR DETECTED ERROR MESSAGE RECEIVED
3Fh	03h	DTLPWRSOMC	INQUIRY DATA HAS CHANGED
44h	00h	DTLPWRSOMC	INTERNAL TARGET FAILURE
3Dh	00h	DTLPWRSOMC	INVALID BITS IN IDENTIFY MESSAGE
2Ch	02h	S	INVALID COMBINATION OF WINDOWS SPECIFIED
20h	00h	DTLPWRSOMC	INVALID COMMAND OPERATION CODE
21h	01h	M	INVALID ELEMENT ADDRESS
24h	00h	DTLPWRSOMC	INVALID FIELD IN CDB
26h	00h	DTLPWRSOMC	INVALID FIELD IN PARAMETER LIST
49h	00h	DTLPWRSOMC	INVALID MESSAGE ERROR
11h	05h	WR O	L-EC UNCORRECTABLE ERROR
60h	00h	S	LAMP FAILURE
5Bh	02h	DTLPWRSOM	LOG COUNTER AT MAXIMUM
5Bh	00h	DTLPWRSOM	LOG EXCEPTION
5Bh	03h	DTLPWRSOM	LOG LIST CODES EXHAUSTED
2Ah	02h	DTL WRSOMC	LOG PARAMETERS CHANGED
21h	00h	DT WR OM	LOGICAL BLOCK ADDRESS OUT OF RANGE
08h	00h	DTL WRSOMC	LOGICAL UNIT COMMUNICATION FAILURE
08h	02h	DTL WRSOMC	LOGICAL UNIT COMMUNICATION PARITY ERROR
08h	01h	DTL WRSOMC	LOGICAL UNIT COMMUNICATION TIME-OUT
05h	00h	DTLPWRSOMC	LOGICAL UNIT DOES NOT RESPOND TO SELECTION
4Ch	00h	DTLPWRSOMC	LOGICAL UNIT FAILED SELF-CONFIGURATION
3Eh	00h	DTLPWRSOMC	LOGICAL UNIT HAS NOT SELF-CONFIGURED YET
04h	01h	DTLPWRSOMC	LOGICAL UNIT IS IN PROCESS OF BECOMING READY
04h	00h	DTLPWRSOMC	LOGICAL UNIT NOT READY, CAUSE NOT REPORTABLE
04h	04h	DTL O	LOGICAL UNIT NOT READY, FORMAT IN PROGRESS
04h	02h	DTLPWRSOMC	LOGICAL UNIT NOT READY, INITIALIZING COMMAND REQUIRED
04h	03h	DTLPWRSOMC	LOGICAL UNIT NOT READY, MANUAL INTERVENTION REQUIRED
25h	00h	DTLPWRSOMC	LOGICAL UNIT NOT SUPPORTED
15h	01h	DTL WRSOM	MECHANICAL POSITIONING ERROR
53h	00h	DTL WRSOM	MEDIA LOAD OR EJECT FAILED
3Bh	0Dh	M	MEDIUM DESTINATION ELEMENT FULL
31h	00h	DT W O	MEDIUM FORMAT CORRUPTED
3Ah	00h	DTL WRSOM	MEDIUM NOT PRESENT
53h	02h	DT WR OM	MEDIUM REMOVAL PREVENTED
3Bh	0Eh	M	MEDIUM SOURCE ELEMENT EMPTY
43h	00h	DTLPWRSOMC	MESSAGE ERROR
3Fh	01h	DTLPWRSOMC	MICROCODE HAS BEEN CHANGED
1Dh	00h	D W O	MISCOMPARE DURING VERIFY OPERATION
11h	0Ah	DT O	MISCORRECTED ERROR
2Ah	01h	DTL WRSOMC	MODE PARAMETERS CHANGED
07h	00h	DTL WRSOM	MULTIPLE PERIPHERAL DEVICES SELECTED
11h	03h	DT W SO	MULTIPLE READ ERRORS
00h	00h	DTLPWRSOMC	NO ADDITIONAL SENSE INFORMATION
00h	15h	R	NO CURRENT AUDIO STATUS TO RETURN
32h	00h	D W O	NO DEFECT SPARE LOCATION AVAILABLE
11h	09h	T	NO GAP FOUND
01h	00h	D W O	NO INDEX/SECTOR SIGNAL
06h	00h	D WR OM	NO REFERENCE POSITION FOUND

Copyright International Organization for Standardization
Provided by IHS under license with ISO
No reproduction or networking permitted without license from IHS Not for Resale

Table 71 (continued)

ASC	ASCQ	DTLPWRSOMC	DESCRIPTION
02h	00h	D WR OM	NO SEEK COMPLETE
03h	01h	T	NO WRITE CURRENT
28h	00h	DTLPWRSOMC	NOT READY TO READY TRANSITION, MEDIUM MAY HAVE CHANGED
5Ah	01h	DT WR OM	OPERATOR MEDIUM REMOVAL REQUEST
5Ah	00h	DTLPWRSOM	OPERATOR REQUEST OR STATE CHANGE INPUT (UNSPECIFIED)
5Ah	03h	DT W O	OPERATOR SELECTED WRITE PERMIT
5Ah	02h	DT W O	OPERATOR SELECTED WRITE PROTECT
61h	02h	S	OUT OF FOCUS
4Eh	00h	DTLPWRSOMC	OVERLAPPED COMMANDS ATTEMPTED
2Dh	00h	T	OVERWRITE ERROR ON UPDATE IN PLACE
3Bh	05h	L	PAPER JAM
1Ah	00h	DTLPWRSOMC	PARAMETER LIST LENGTH ERROR
26h	01h	DTLPWRSOMC	PARAMETER NOT SUPPORTED
26h	02h	DTLPWRSOMC	PARAMETER VALUE INVALID
2Ah	00h	DTL WRSOMC	PARAMETERS CHANGED
03h	00h	DTL W SO	PERIPHERAL DEVICE WRITE FAULT
50h	02h	T	POSITION ERROR RELATED TO TIMING
3Bh	0Ch	S	POSITION PAST BEGINNING OF MEDIUM
3Bh	0Bh	S	POSITION PAST END OF MEDIUM
15h	02h	DT WR O	POSITIONING ERROR DETECTED BY READ OF MEDIUM
29h	00h	DTLPWRSOMC	POWER ON, RESET, OR BUS DEVICE RESET OCCURRED
42h	00h	D	POWER-ON OR SELF-TEST FAILURE (SHOULD USE 40 NN)
1Ch	01h	D O	PRIMARY DEFECT LIST NOT FOUND
40h	00h	D	RAM FAILURE (SHOULD USE 40 NN)
15h	00h	DTL WRSOM	RANDOM POSITIONING ERROR
3Bh	0Ah	S	READ PAST BEGINNING OF MEDIUM
3Bh	09h	S	READ PAST END OF MEDIUM
11h	01h	DT W SO	READ RETRIES EXHAUSTED
14h	01h	DT WR O	RECORD NOT FOUND
14h	00h	DTL WRSO	RECORDED ENTITY NOT FOUND
18h	02h	D WR O	RECOVERED DATA - DATA AUTO-REALLOCATED
18h	05h	D WR O	RECOVERED DATA - RECOMMEND REASSIGNMENT
18h	06h	D WR O	RECOVERED DATA - RECOMMEND REWRITE
17h	05h	D WR O	RECOVERED DATA USING PREVIOUS SECTOR ID
18h	03h	R	RECOVERED DATA WITH CIRC
18h	01h	D WR O	RECOVERED DATA WITH ERROR CORRECTION & RETRIES APPLIED
18h	00h	DT WR O	RECOVERED DATA WITH ERROR CORRECTION APPLIED
18h	04h	R	RECOVERED DATA WITH L-EC
17h	03h	DT WR O	RECOVERED DATA WITH NEGATIVE HEAD OFFSET
17h	00h	DT WRSO	RECOVERED DATA WITH NO ERROR CORRECTION APPLIED
17h	02h	DT WR O	RECOVERED DATA WITH POSITIVE HEAD OFFSET
17h	01h	DT WRSO	RECOVERED DATA WITH RETRIES
17h	04h	WR O	RECOVERED DATA WITH RETRIES AND/OR CIRC APPLIED
17h	06h	D W O	RECOVERED DATA WITHOUT ECC - DATA AUTO-REALLOCATED
17h	07h	D W O	RECOVERED DATA WITHOUT ECC - RECOMMEND REASSIGNMENT
17h	08h	D W O	RECOVERED DATA WITHOUT ECC - RECOMMEND REWRITE
1Eh	00h	D W O	RECOVERED ID WITH ECC CORRECTION
3Bh	08h	T	REPOSITION ERROR
36h	00h	L	RIBBON, INK, OR TONER FAILURE
37h	00h	DTL WRSOMC	ROUNDED PARAMETER
5Ch	00h	D O	RPL STATUS CHANGE
39h	00h	DTL WRSOMC	SAVING PARAMETERS NOT SUPPORTED
62h	00h	S	SCAN HEAD POSITIONING ERROR
47h	00h	DTLPWRSOMC	SCSI PARITY ERROR
54h	00h	P	SCSI TO HOST SYSTEM INTERFACE FAILURE
45h	00h	DTLPWRSOMC	SELECT OR RESELECT FAILURE

Copyright International Organization for Standardization
Provided by IHS under license with ISO
No reproduction or networking permitted without license from IHS Not for Resale

Table 71 (concluded)

ASC	ASCQ	DTLPWRSOMC	DESCRIPTION
3Bh	00h	TL	SEQUENTIAL POSITIONING ERROR
00h	03h	T	SETMARK DETECTED
3Bh	04h	L	SLEW FAILURE
09h	03h	WR O	SPINDLE SERVO FAILURE
5Ch	02h	D O	SPINDLES NOT SYNCHRONIZED
5Ch	01h	D O	SPINDLES SYNCHRONIZED
1Bh	00h	DTLPWRSOMC	SYNCHRONOUS DATA TRANSFER ERROR
55h	00h	P	SYSTEM RESOURCE FAILURE
33h	00h	T	TAPE LENGTH ERROR
3Bh	03h	L	TAPE OR ELECTRONIC VERTICAL FORMS UNIT NOT READY
3Bh	01h	T	TAPE POSITION ERROR AT BEGINNING-OF-MEDIUM
3Bh	02h	T	TAPE POSITION ERROR AT END-OF-MEDIUM
3Fh	00h	DTLPWRSOMC	TARGET OPERATING CONDITIONS HAVE CHANGED
5Bh	01h	DTLPWRSOM	THRESHOLD CONDITION MET
26h	03h	DTLPWRSOMC	THRESHOLD PARAMETERS NOT SUPPORTED
2Ch	01h	S	TOO MANY WINDOWS SPECIFIED
09h	00h	DT WR O	TRACK FOLLOWING ERROR
09h	01h	WR O	TRACKING SERVO FAILURE
61h	01h	S	UNABLE TO ACQUIRE VIDEO
57h	00h	R	UNABLE TO RECOVER TABLE-OF-CONTENTS
53h	01h	T	UNLOAD TAPE FAILURE
11h	00h	DT WRSO	UNRECOVERED READ ERROR
11h	04h	D W O	UNRECOVERED READ ERROR - AUTO REALLOCATE FAILED
11h	0Bh	D W O	UNRECOVERED READ ERROR - RECOMMEND REASSIGNMENT
11h	0Ch	D W O	UNRECOVERED READ ERROR - RECOMMEND REWRITE THE DATA
46h	00h	DTLPWRSOMC	UNSUCCESSFUL SOFT RESET
59h	00h	O	UPDATED BLOCK READ
61h	00h	S	VIDEO ACQUISITION ERROR
50h	00h	T	WRITE APPEND ERROR
50h	01h	T	WRITE APPEND POSITION ERROR
0Ch	00h	T S	WRITE ERROR
0Ch	02h	D W O	WRITE ERROR - AUTO REALLOCATION FAILED
0Ch	01h	D W O	WRITE ERROR RECOVERED WITH AUTO REALLOCATION
27h	00h	DT W O	WRITE PROTECTED
80h THROUGH FFh	XXh XX		Vendor-specific.
XXh THROUGH XXh	80h FFh		Vendor-specific QUALIFICATION OF STANDARD ASC.
			ALL CODES NOT SHOWN ARE RESERVED.

NOTE - Annex D contains the ASC and ASCQ assignments in numeric order.

Copyright International Organization for Standardization
Provided by IHS under license with ISO
No reproduction or networking permitted without license from IHS Not for Resale

8.2.15 SEND DIAGNOSTIC command

The SEND DIAGNOSTIC command (see table 72) requests the target to perform diagnostic operations on itself, on the logical unit, or on both. The only mandatory implementation of this command is the self-test feature with the parameter list length of zero. Except when the self-test bit is one, this command is usually followed by a RECEIVE DIAGNOSTIC RESULTS command.

Table 72 - SEND DIAGNOSTIC command

Bit / Byte	7	6	5	4	3	2	1	0
0	Operation code (1Dh)							
1	Logical unit number			PF	Reserved	SelfTest	DevOfL	UnitOfL
2	Reserved							
3	(MSB) Parameter list length							
4								(LSB)
5	Control							

A page format (PF) bit of one specifies that the SEND DIAGNOSTIC parameters conform to the page structure as specified in this International Standard. The implementation of the PF bit is optional. See 8.3.1 for the definition of diagnostic pages. A PF bit of zero indicates that the SEND DIAGNOSTIC parameters are as specified in SCSI-1 (i.e. all parameters are vendor-specific).

A self-test (SelfTest) bit of one directs the target to complete its default self-test. If the self-test successfully passes, the command shall be terminated with GOOD status; otherwise, the command shall be terminated with CHECK CONDITION status and the sense key shall be set to HARDWARE ERROR.

A self-test bit of zero requests that the target perform the diagnostic operation specified in the parameter list. The diagnostic operation might or might not require a target to return data that contains diagnostic results. If the return of data is not required, the return of GOOD status indicates successful completion of the diagnostic operation. If the return of data is required, the target shall either:

a) perform the requested diagnostic operation, prepare the data to be returned and indicate completion by returning GOOD status. The initiator issues a RECEIVE DIAGNOSTIC RESULTS command to recover the data;
b) accept the parameter list, and if no errors are detected in the parameter list, return GOOD status. The requested diagnostic operation and the preparation of the data to be returned are performed upon receipt of a RECEIVE DIAGNOSTIC RESULTS command.

NOTE 92 To insure that the diagnostic command information is not destroyed by a command sent from another initiator, either the SEND DIAGNOSTIC command should be linked to the RECEIVE DIAGNOSTIC RESULTS command or the logical unit should be reserved.

The device off-line (DevOfL) and unit off-line (UnitOfL) bits are generally set by operating system software, while the parameter list is prepared by diagnostic application software. These bits grant permission to perform vendor-specific diagnostic operations on the target that may be visible to attached initiators. Thus, by preventing operations that are not enabled by these bits, the target assists the operating system in protecting its resources.

A UnitOfL bit of one grants permission to the target to perform diagnostic operations that may affect the user accessible medium on the logical unit, e.g. write operations to the user accessible medium, or repositioning of the medium on sequential access devices. The implementation of the UnitOfL bit is optional. A UnitOfL bit of zero prohibits any diagnostic operations that may be detected by subsequent I/O processes.

Copyright International Organization for Standardization
Provided by IHS under license with ISO
No reproduction or networking permitted without license from IHS
Not for Resale

A DevOfL bit of one grants permission to the target to perform diagnostic operations that may affect all the logical units on a target, e.g. alteration of reservations, log parameters, or sense data. The implementation of the DevOfL bit is optional. A DevOfL bit of zero prohibits diagnostic operations that may be detected by subsequent I/O processes.

The parameter list length field specifies the length in bytes of the parameter list that shall be transferred from the initiator to the target. A parameter list length of zero indicates that no data shall be transferred. This condition shall not be considered an error. If the specified parameter list length results in the truncation of one or more pages (PF bit set to one) the target shall return CHECK CONDITION status with a sense key of ILLEGAL REQUEST and an additional sense code of INVALID FIELD IN CDB.

See note 83 under the RECEIVE DIAGNOSTIC RESULTS command in 8.2.13.

8.2.16 TEST UNIT READY command

The TEST UNIT READY command (see table 73) provides a means to check if the logical unit is ready. This is not a request for a self-test. If the logical unit would accept an appropriate medium-access command without returning CHECK CONDITION status, this command shall return a GOOD status. If the logical unit cannot become operational or is in a state such that an initiator action (e.g. START UNIT command) is required to make the unit ready, the target shall return CHECK CONDITION status with a sense key of NOT READY.

Table 73 - TEST UNIT READY command

Bit / Byte	7	6	5	4	3	2	1	0
0	Operation code (00h)							
1	Logical unit number			Reserved				
2	Reserved							
3	Reserved							
4	Reserved							
5	Control							

Table 74 defines the preferred responses to the TEST UNIT READY command. Higher-priority responses (e.g. BUSY or RESERVATION CONFLICT) are also permitted.

Copyright International Organization for Standardization
Provided by IHS under license with ISO
No reproduction or networking permitted without license from IHS Not for Resale

Table 74 - Preferred TEST UNIT READY responses

Status	Sense key	ASC and ASCQ
GOOD	NO SENSE	NO ADDITIONAL SENSE INFORMATION or other valid additional sense code.
CHECK CONDITION	ILLEGAL REQUEST	LOGICAL UNIT NOT SUPPORTED
CHECK CONDITION	NOT READY	LOGICAL UNIT DOES NOT RESPOND TO SELECTION
CHECK CONDITION	NOT READY	MEDIUM NOT PRESENT
CHECK CONDITION	NOT READY	LOGICAL UNIT NOT READY, CAUSE NOT REPORTABLE
CHECK CONDITION	NOT READY	LOGICAL UNIT IS IN PROCESS OF BECOMING READY
CHECK CONDITION	NOT READY	LOGICAL UNIT NOT READY, INITIALIZING COMMAND REQUIRED
CHECK CONDITION	NOT READY	LOGICAL UNIT NOT READY, MANUAL INTERVENTION REQUIRED
CHECK CONDITION	NOT READY	LOGICAL UNIT NOT READY, FORMAT IN PROGRESS

8.2.17 WRITE BUFFER command

The WRITE BUFFER command (see table 75) is used in conjunction with the READ BUFFER command as a diagnostic for testing target memory and the SCSI bus integrity. Additional modes are provided for downloading microcode and for downloading and saving microcode.

Table 75 - WRITE BUFFER command

Bit / Byte	7	6	5	4	3	2	1	0
0	Operation code (3Bh)							
1	Logical unit number			Reserved		Mode		
2	Buffer ID							
3	(MSB)							
4	Buffer offset							
5								(LSB)
6	(MSB)							
7	Parameter list length							
8								(LSB)
9	Control							

This command shall not alter any medium of the target when the data mode or the combined header and data mode is specified.

Copyright International Organization for Standardization
Provided by IHS under license with ISO
No reproduction or networking permitted without license from IHS Not for Resale

The function of this command and the meaning of fields within the command descriptor block depend on the contents of the mode field. The mode field is defined in table 76.

Table 76 - WRITE BUFFER mode field

Mode	Description	Implementation requirements
000b	Write combined header and data	Optional
001b	Vendor-specific	Vendor-specific
010b	Write data	Optional
011b	Reserved	Reserved
100b	Download microcode	Optional
101b	Download microcode and save	Optional
110b	Reserved	Reserved
111b	Reserved	Reserved

NOTE 93 Modes 000b and 001b are included for compatibility with CCS products that were designed prior to the generation of this International Standard. These products restrict the maximum transfer length to 65 535 bytes.

8.2.17.1 Combined header and data mode (000b)

In this mode, data to be transferred is preceded by a four-byte header. The four-byte header consists of all reserved bytes. The buffer ID and the buffer offset fields shall be zero. The parameter list length field specifies the maximum number of bytes that shall be transferred during the DATA OUT phase. This number includes four bytes of header, so the data length to be stored in the target's buffer is parameter list length minus four. The initiator should attempt to ensure that the parameter list length is not greater than four plus the buffer capacity (see 8.2.12.1) that is returned in the header of the READ BUFFER command (mode 000b). If the parameter list length exceeds the buffer capacity target shall return CHECK CONDITION status and shall set the sense key to ILLEGAL REQUEST.

8.2.17.2 Vendor-specific mode (001b)

In this mode, the meaning of the buffer ID, buffer offset, and parameter list length fields are not specified by this International Standard.

8.2.17.3 Data mode (010b)

In this mode, the DATA OUT phase contains buffer data. The buffer ID field identifies a specific buffer within the target. The vendor assigns buffer ID codes to buffers within the target. Buffer ID zero shall be supported. If more than one buffer is supported, additional buffer ID codes shall be assigned contiguously, beginning with one. If an unsupported buffer ID code is selected, the target shall return CHECK CONDITION status and shall set the sense key to ILLEGAL REQUEST with an additional sense code of INVALID FIELD IN CDB.

Data are written to the target buffer starting at the location specified by the buffer offset. The initiator should conform to the offset boundary requirements returned in the READ BUFFER descriptor. If the target is unable to accept the specified buffer offset, it shall return CHECK CONDITION status and it shall set the sense key to ILLEGAL REQUEST with an additional sense code of INVALID FIELD IN CDB.

The parameter list length specifies the maximum number of bytes that shall be transferred during the DATA OUT phase to be stored in the specified buffer beginning at the buffer offset. The initiator should attempt to ensure that the parameter list length plus the buffer offset does not exceed the capacity of the specified buffer. (The capacity of the buffer can be determined by the buffer capacity field in the READ BUFFER descriptor.) If the buffer offset and parameter list length fields specify a transfer that would exceed the buffer capacity, the target shall return CHECK CONDITION status and shall set the sense key to ILLEGAL REQUEST with an additional sense code of INVALID FIELD IN CDB.

Copyright International Organization for Standardization
Provided by IHS under license with ISO
No reproduction or networking permitted without license from IHS Not for Resale

8.2.17.4 Download microcode mode (100b)

In this mode, vendor-specific microcode or control information shall be transferred to the control memory space of the target. After a power-cycle or reset, the device operation shall revert to a vendor-specific condition. The meanings of the buffer ID, buffer offset, and parameter list length fields are not specified by this International Standard and are not required to be zero-filled. When the microcode download has completed successfully the target shall generate a unit attention condition for all initiators except the one that issued the WRITE BUFFER command (see 7.9). The additional sense code shall be set to MICROCODE HAS BEEN CHANGED.

8.2.17.5 Download microcode and save mode (101b)

In this mode, vendor-specific microcode or control information shall be transferred to the target and, if the WRITE BUFFER command is completed successfully, also shall be saved in a non-volatile memory space (semiconductor, disk, or other). The downloaded code shall then be effective after each power-cycle and reset until it is supplanted in another download microcode and save operation. The meanings of the buffer ID, buffer offset, and parameter list length fields are not specified by this International Standard and are not required to be zero-filled. When the download microcode and save command has completed successfully the target shall generate a unit attention condition (see 7.9) for all initiators except the one that issued the WRITE BUFFER command. When reporting the unit attention condition, the target shall set the additional sense code to MICROCODE HAS BEEN CHANGED.

8.3 Parameters for all device types

8.3.1 Diagnostic parameters

This subclause describes the diagnostic page structure and the diagnostic pages that are applicable to all SCSI devices. Pages specific to each device type are described in the third subclause of each device-type clause (i.e. 9.3, 10.3, etc.).

A SEND DIAGNOSTIC command with a PF bit of one specifies that the SEND DIAGNOSTIC parameter list consists of zero or more diagnostic pages and that the data returned by the subsequent RECEIVE DIAGNOSTIC RESULTS command shall use the diagnostic page format (see table 77) described in this International Standard.

Table 77 - Diagnostic page format

Bit / Byte	7	6	5	4	3	2	1	0
0	Page code							
1	Reserved							
2	(MSB) Page length (n-3)							
3								(LSB)
4	Diagnostic parameters							
n								

Each diagnostic page defines a function or operation that the target shall perform. The page contains a page header followed by the analysis data that is formatted according to the page code specified in the previous SEND DIAGNOSTIC command.

Targets that implement diagnostic pages are only required to accept a single diagnostic page per command.

Copyright International Organization for Standardization
Provided by IHS under license with ISO
No reproduction or networking permitted without license from IHS Not for Resale

The page code field identifies which diagnostic page is being sent or returned. The page codes are defined in table 78.

Table 78 - Diagnostic page codes

Page code	Description	Subclause
00h 01h - 3Fh 40h - 7Fh 80h - FFh	Supported diagnostics pages Reserved (for all device type pages) See specific device type for definition Vendor-specific pages	8.3.1.1

The page length field specifies the length in bytes of the diagnostic parameters that follow this field. If the initiator sends a page length that results in the truncation of any parameter, the target shall terminate the command with CHECK CONDITION status. The sense key shall be set to ILLEGAL REQUEST with the additional sense code set to INVALID FIELD IN PARAMETER LIST.

The diagnostic parameters are defined for each page code. The diagnostic parameters within a page may be defined differently in a SEND DIAGNOSTIC command than in a RECEIVE DIAGNOSTIC RESULTS command.

8.3.1.1 Supported diagnostic pages

The supported diagnostics page (see table 79) returns the list of diagnostic pages implemented by the target. This page shall be implemented if the target implements the page format option of the SEND DIAGNOSTIC and RECEIVE DIAGNOSTIC RESULTS commands.

Table 79 - Supported diagnostic pages

Bit Byte	7	6	5	4	3	2	1	0
0	Page code (00h)							
1	Reserved							
2	(MSB)			Page length (n-3)				
3								(LSB)
4 — — — n	Supported page list							

The definition of this page for the SEND DIAGNOSTIC command includes only the first four bytes. If the page length field is not zero, the target shall terminate the SEND DIAGNOSTIC command with CHECK CONDITION status. The sense key shall be set to ILLEGAL REQUEST with an additional sense code of INVALID FIELD IN PARAMETER LIST. This page instructs the target to make available the list of all supported diagnostic pages to be returned by a subsequent RECEIVE DIAGNOSTIC RESULTS command.

The definition of this page for the RECEIVE DIAGNOSTIC RESULTS command includes the list of diagnostic pages supported by the target.

The page length field specifies the length in bytes of the following supported page list.

The supported page list field shall contain a list of all diagnostic page codes implemented by the target in ascending order beginning with page code 00h.

Copyright International Organization for Standardization
Provided by IHS under license with ISO
No reproduction or networking permitted without license from IHS Not for Resale

8.3.2 Log parameters

This subclause describes the log page structure and the log pages that are applicable to all SCSI devices. Pages specific to each device type are described in the third subclause of each device-type clause (i.e. 9.3.2, 10.3.2, etc.). The LOG SELECT command supports the ability to send zero or more log pages. The LOG SENSE command returns a single log page specified in the page code field of the command descriptor block (see 8.2.7).

Each log page begins with a four-byte page header followed by zero or more variable-length log parameters defined for that page. The log page format is defined in table 80.

Table 80 - Log page format

Bit / Byte	7	6	5	4	3	2	1	0
0	Reserved		Page code					
1	Reserved							
2	(MSB)							
3	Page length (n-3)							(LSB)
	Log parameters(s)							
4	Log parameter (First) (Length x)							
x+3								
	. . .							
n-y+1	Log parameter (Last) (Length y)							
n								

The page code field identifies which log page is being transferred.

The page length field specifies the length in bytes of the following log parameters. If the initiator sends a page length that results in the truncation of any parameter, the target shall terminate the command with CHECK CONDITION status. The sense key shall be set to ILLEGAL REQUEST with the additional sense code set to INVALID FIELD IN PARAMETER LIST.

Most log pages contain one or more special data structures called log parameters (see table 81). Log parameters may be data counters that record a count of a particular event (or events) or log parameters may be list parameters (strings) which contain a description of a particular event.

Copyright International Organization for Standardization
Provided by IHS under license with ISO
No reproduction or networking permitted without license from IHS Not for Resale

Table 81 - Log parameter

Bit / Byte	7	6	5	4	3	2	1	0
0	(MSB)							
1	Parameter code							(LSB)
2	DU	DS	TSD	ETC	TMC		Reserved	LP
3	Parameter length (n-3)							
4	Parameter value							
n								

Each log parameter begins with a four-byte parameter header followed by one or more bytes of parameter value data.

The parameter code field identifies the log parameter is being transferred for that log page.

The DU, DS, TSD, ETC, TMC, and LP fields are collectively referred to as the parameter control byte. These fields are described below.

For cumulative log parameter values (indicated by the PC field of the LOG SELECT and LOG SENSE command descriptor block), the disable update (DU) bit is defined as follows:

a) A zero value indicates that the target shall update the log parameter value to reflect all events that should be noted by that parameter.
b) A one value indicates that the target shall not update the log parameter value except in response to a LOG SELECT command that specifies a new value for the parameter.

NOTE 94 When updating cumulative log parameter values, a target may use volatile memory to hold these values until a LOG SELECT or LOG SENSE command is received with an SP bit of one (or a target-defined event occurs). Thus the updated cumulative log parameter values may be lost if a power cycle occurs.

The DU bit is not defined for threshold values (indicated by the PC field of the LOG SENSE command descriptor block) nor for list parameters (indicated by the LP bit). The target shall ignore the value of any DU bits in a LOG SELECT command.

A disable save (DS) bit of zero indicates that the target supports saving for that log parameter. The target shall save the current cumulative or the current threshold parameter value (depending on the value in the PC field of the command descriptor block) in response to a LOG SELECT or LOG SENSE command with an SP bit of one. A DS bit of one indicates that the target does not support saving that log parameter in response to a LOG SELECT or LOG SENSE command with an SP bit of one.

A target save disable (TSD) bit of zero indicates that the target provides a target-defined method for saving log parameters. This implicit saving operation shall be done frequently enough to insure that the cumulative parameter values retain statistical significance (i.e. across power cycles). A TSD bit of one indicates that either the target does not provide a target-defined method for saving log parameters or the target-defined method has been disabled by the initiator.

An enable threshold comparison (ETC) bit of one indicates that a comparison to the threshold value is performed whenever the cumulative value is updated. An ETC bit of zero indicates that a comparison is not performed. The value of the ETC bit is the same for cumulative and threshold parameters.

The threshold met criteria (TMC) field (see table 82) defines the basis for comparison of the cumulative and threshold values. The TMC field is valid only if the ETC bit is one. The value of the TMC field is the same for cumulative and threshold parameters.

Copyright International Organization for Standardization
Provided by IHS under license with ISO
No reproduction or networking permitted without license from IHS Not for Resale

Table 82 - Threshold met criteria

Code	Basis for comparison
00b	Every update of the cumulative value
01b	Cumulative value equal threshold value
10b	Cumulative value not equal threshold value
11b	Cumulative value greater than threshold value

If the ETC bit is one and the result of the comparison is true, a unit attention condition shall be generated for all initiators. When reporting the unit attention condition, the target shall set the sense key to UNIT ATTENTION and set the additional sense code to THRESHOLD CONDITION MET.

The list parameter (LP) bit indicates the format of the log parameter. If an initiator attempts to set the value of the LP bit to a value other than the one returned for the same parameter in the LOG SENSE command, the target shall terminate the command with CHECK CONDITION status. The sense key shall be set to ILLEGAL REQUEST with the additional sense code set to INVALID FIELD IN PARAMETER LIST.

An LP bit of zero indicates that the parameter is a data counter. Data counters are associated with one or more events; the data counter is updated whenever one of these events occurs by incrementing of the counter value. If each data counter has associated with it a target-defined maximum value. Upon reaching this maximum value, the data counter shall not be incremented (i.e. it does not wrap). When a data counter reaches its maximum value, the target shall set the associated DU bit to one. If the data counter is at or reaches its maximum value during the execution of a command, the target shall complete the command. If the command completes correctly (except for the data counter being at its maximum value) and if the RLEC bit of the control mode page (8.3.3.1) is set to one; then the target shall terminate the command with CHECK CONDITION status and set the sense key to RECOVERED ERROR with the additional sense code set to LOG COUNTER AT MAXIMUM.

An LP bit of one indicates that the parameter is a list parameter. List parameters are not counters and thus the ETC and TMC fields shall be set to zero. A list parameter is a string of ISO/IEC 646 graphic codes (i.e. code values 20h through 7Eh).

If more than one list parameter is defined in a single log page, the following rules apply to assigning parameter codes:

a) The parameter updated last shall have a higher parameter code than the previous parameter, except as defined in rule b).
b) When the maximum parameter code value supported by the target is reached, the target shall assign the lowest parameter code value to the next log parameter (i.e. wrap-around parameter codes). If the associated command completes correctly (except for the parameter code being at its maximum value) and if the RLEC bit of the control mode page (8.3.3.1) is set to one; then the target shall terminate the command with CHECK CONDITION status and set the sense key to RECOVERED ERROR with the additional sense code set to LOG LIST CODES EXHAUSTED.

NOTE 95 List parameters can be used to store the locations of defective blocks in the following manner. When a defective block is identified, a list parameter is updated to reflect the location and cause of the defect. When the next defect is encountered, the list parameter with the next higher parameter code is updated to record this defect. The size of the page can be made target specific to accommodate memory limitations. It is recommended that one or more data counter parameters be defined for the page to keep track of the number of valid list parameters and the parameter code of the parameter with the oldest recorded defect. This technique can be adapted to record other types of information.

The parameter length field specifies the length in bytes of the following parameter value. If the initiator sends a parameter length value that results in the truncation of the parameter value, the target shall terminate the command with CHECK CONDITION status. The sense key shall be set to ILLEGAL REQUEST with the additional sense code set to INVALID FIELD IN PARAMETER LIST.

Copyright International Organization for Standardization
Provided by IHS under license with ISO
No reproduction or networking permitted without license from IHS Not for Resale

If the initiator sends a log parameter value that is outside the range supported by the target, and rounding is implemented for that parameter, the target may either:

a) round to an acceptable value and terminate the command as described in 7.5.4; or
b) terminate the command with CHECK CONDITION status and set the sense key to ILLEGAL REQUEST with the additional sense code set to INVALID FIELD IN PARAMETER LIST.

When any counter in a log page reaches its maximum value, incrementing of all counters in that log page shall cease until reinitialized by the initiator via a LOG SELECT command. If the RLEC bit of the control mode page is one, then the target shall report the exception condition.

The page code assignments for the log pages are listed in table 83.

Table 83 - Log page codes

Page code	Description	Subclause
01h	Buffer over-run/under-run page	8.3.2.1
03h	Error counter (read) page	8.3.2.2
04h	Error counter (read reverse) page	8.3.2.2
05h	Error counter (verify) page	8.3.2.2
02h	Error counter (write) page	8.3.2.2
07h	Last n error events page	8.3.2.3
06h	Non-medium error page	8.3.2.4
00h	Supported log pages	8.3.2.5
08h - 2Fh	Reserved	
3Fh	Reserved	
30h - 3Eh	Vendor-specific pages	

8.3.2.1 Buffer over-run/under-run page

The buffer over-run/under-run page (page code 01h) defines 24 data counters that may be used to record the number of buffer over-runs or under-runs for the logical unit. A target that implements this page may implement one or more of the defined data counters.

A buffer over-run or under-run can occur when an initiator does not transmit data to or from the target's buffer fast enough to keep up with reading or writing the media. This can be caused by a slow transfer rate across the SCSI bus or by a high SCSI bus utilization that prevents reconnection by the target. A buffer over-run condition can occur during a read operation when a buffer full condition prevents continued transfer of data from the media to the buffer. A buffer under-run condition can occur during a write operation when a buffer empty condition prevents continued transfer of data to the media from the buffer. Most devices incur a delay at this point while the media is repositioned.

Table 84 defines the parameter code field for the buffer over-run/under-run counters.

Table 84 - Parameter code field for buffer over-run/under-run counters

Bit / Byte	7	6	5	4	3	2	1	0
0	Reserved							
1	Count basis			Cause				Type

The parameter code field for buffer over-run/under-run counters is a 16-bit value comprised of eight reserved bits, a three-bit count basis field (see table 85), a four-bit cause field (see table 86), and a one-bit type field. These are concatenated to determine the value of the parameter code for that log parameter. For example, a counter for parameter code value of 0023h specifies a count basis of 001b; a cause of 0001b; and a type of 1b; this counter is incremented once per command that experiences an over-run due to the SCSI bus being busy.

Copyright International Organization for Standardization
Provided by IHS under license with ISO
No reproduction or networking permitted without license from IHS Not for Resale

Table 85 - Count basis definition

Count basis	Description
000b	Undefined
001b	Per command
010b	Per failed reconnect
011b	Per unit of time
100b - 111b	Reserved

The count basis field defines the criteria for incrementing the counter. The following criteria are defined:

NOTE 96 The per unit of time count basis is device type specific. Direct-access devices typically use a latency period (i.e. one revolution of the medium) as the unit of time.

The cause field indicates the reason that the over-run or under-run occurred. The following causes are defined in table 86.

Table 86 - Cause field definition

Cause	Description
0h	Undefined
1h	SCSI bus busy
2h	Transfer rate too slow
3h - Fh	Reserved

The type field indicates whether the counter records under-runs or over-runs. A value of zero specifies a buffer under-run condition and a value of one specifies a buffer over-run condition.

The counters contain the total number of times buffer over-run or under-run conditions have occurred since the last time the counter was cleared. The counter shall be incremented for each occurrence of an under-run or over-run condition and can be incremented more than once for multiple occurrences during the execution of a single command.

8.3.2.2 Error counter pages

This clause defines the optional error counter pages for write errors (page code 02h), read errors (page code 03h), read reverse errors (page code 04h) and verify errors (page code 05h). The log page format is defined near the beginning of 8.3.2. A page can return one or more log parameters this record events defined by the parameter codes.

Table 87 defines the parameter codes for the error counter pages. Support of each log parameter is optional.

Table 87 - Parameter codes for error counter pages

Parameter code	Description
0000h	Errors corrected without substantial delay
0001h	Errors corrected with possible delays
0002h	Total (e.g. rewrites or rereads)
0003h	Total errors corrected
0004h	Total times correction algorithm processed
0005h	Total bytes processed
0006h	Total uncorrected errors
0007h - 7FFFh	Reserved
8000h - FFFFh	Vendor-specific

Copyright International Organization for Standardization
Provided by IHS under license with ISO
No reproduction or networking permitted without license from IHS Not for Resale

NOTE 97 The exact definition of the error counters is not part of this International Standard. These counters should not be used to compare products because the products may define errors differently.

8.3.2.3 Last *n* error events page

Log page (07h) provides for a number of error-event records using the list parameter format of the log page. The number of these error-event records supported, *n*, is device-specific. Each error-event record contains device-specific diagnostic information for a single error encountered by the device. The parameter code associated with error-event record indicates the relative time at which the error occurred. A higher parameter code indicates that the error event occurred later in time.

The content of the parameter value field of each log parameter is an ISO/IEC 646 character string which may describe the error event. The exact contents of the character string is not defined by this International Standard.

When the last supported parameter code is used by an error-event record, the recording on this page of all subsequent error information shall cease until one or more of the list parameters with the highest parameter codes have been reinitialized. If the RLEC bit of the control mode page (8.3.3.1) is set to one, the target shall return CHECK CONDITION status with the sense key set to RECOVERED ERROR and the additional sense code set to LOG LIST CODES EXHAUSTED. Alternatively, the target may report this condition via asynchronous event notification (see 7.5.5).

8.3.2.4 Non-medium error page

This page (page code 06h) provides for summing the occurrences of recoverable error events other than write, read, or verify failures. No discrimination among the various types of events is provided by parameter code (see table 88). Vendor-specific discrimination may be provided through the vendor-specific parameter codes.

Table 88 - Non-medium error event parameter codes

Parameter code	Description
0000h	Non-medium error count
0001h - 7FFFh	Reserved
8000h - FFFFh	Vendor-specific error counts

8.3.2.5 Supported log pages

The supported log page (see table 89) returns the list of log pages implemented by the target. Targets that implement the LOG SENSE command shall implement this log page.

Table 89 - Supported log pages

Bit / Byte	7	6	5	4	3	2	1	0
0	Reserved		Page code (00h)					
1	Reserved							
2	(MSB)							
3	Page length (n-3)							(LSB)
4	Supported page list							
n								

Copyright International Organization for Standardization
Provided by IHS under license with ISO
No reproduction or networking permitted without license from IHS Not for Resale

This page is not defined for the LOG SELECT command. This log page returns the list of supported log pages for the specified logical unit.

The page length field specifies the length in bytes of the following supported page list.

The supported page list field shall contain a list of all log page codes implemented by the target in ascending order beginning with page code 00h.

8.3.3 Mode parameters

This subclause describes the block descriptors and the pages used with MODE SELECT and MODE SENSE commands that are applicable to all SCSI devices. Pages specific to each device type are described in the third subclause of each device-type clause (i.e. 9.3, 10.3, etc.).

The mode parameter list shown in table 90 contains a header, followed by zero or more block descriptors, followed by zero or more variable-length pages. Parameter lists are defined for each device type.

Table 90 - Mode parameter list

Bit / Byte	7	6	5	4	3	2	1	0
0 - n	Mode parameter header							
0 - n	Block descriptor(s)							
0 - n	Page(s)							

The six-byte command descriptor block parameter header is defined in table 91.

Table 91 - Mode parameter header(06)

Bit / Byte	7	6	5	4	3	2	1	0
0	Mode data length							
1	Medium type							
2	Device-specific parameter							
3	Block descriptor length							

The ten-byte command descriptor block parameter header is defined in table 92.

Copyright International Organization for Standardization
Provided by IHS under license with ISO
No reproduction or networking permitted without license from IHS Not for Resale

Table 92 - Mode parameter header(10)

Bit / Byte	7	6	5	4	3	2	1	0
0	(MSB)							
1				Mode data length				(LSB)
2				Medium type				
3				Device-specific parameter				
4				Reserved				
5				Reserved				
6	(MSB)							
7				Block descriptor length				(LSB)

When using the MODE SENSE command, the mode data length field specifies the length in bytes of the following data that is available to be transferred. The mode data length does not include itself. When using the MODE SELECT command, this field is reserved.

NOTE 98 Targets that support more than 256 bytes of block descriptors and pages may need to implement ten-byte mode commands. The mode data length field in the six-byte command descriptor block header limits the returned data to 256 bytes.

Medium types are unique for each device type. Refer to the mode parameters clause of the specific device type for definition of these values. Some device types reserve this field.

The device specific parameter is unique for each device type. Refer to the mode parameters clause of the specific device type for definition of this field. Some device types reserve all or part of this field.

The block descriptor length specifies the length in bytes of all the block descriptors. It is equal to the number of block descriptors times eight, and does not include pages or vendor-specific parameters, if any, that may follow the last block descriptor. A block descriptor length of zero indicates that no block descriptors are included in the mode parameter list. This condition shall not be considered an error.

The mode parameter block descriptor is shown in table 93.

Table 93 - Mode parameter block descriptor

Bit / Byte	7	6	5	4	3	2	1	0
0				Density code				
1	(MSB)							
2				Number of blocks				
3								(LSB)
4				Reserved				
5	(MSB)							
6				Block length				
7								(LSB)

Copyright International Organization for Standardization
Provided by IHS under license with ISO
No reproduction or networking permitted without license from IHS Not for Resale

Block descriptors specify some of the medium characteristics for all or part of a logical unit. Support for block descriptors is optional. Each block descriptor contains a density code field, a number of blocks field, and a block length field. Block descriptor values are always current (i.e. saving is not supported). A unit attention condition (see 7.9) shall be generated when any block descriptor values are changed.

The density code field is unique for each device type. Refer to the mode parameters clause of the specific device type for definition of this field. Some device types reserve all or part of this field.

The number of blocks field specifies the number of logical blocks on the medium to which the density code and block length fields apply. A value of zero indicates that all of the remaining logical blocks of the logical unit shall have the medium characteristics specified.

NOTE 99 There may be implicit association between parameters defined in the pages and block descriptors. For direct-access devices, the block length affects the optimum values (the values that achieve best performance) for the sectors per track, bytes per physical sector, track skew factor, and cylinder skew factor fields in the format parameters page. In this case, the target may change parameters not explicitly sent with the MODE SELECT command. A subsequent MODE SENSE command would reflect these changes.

The number of remaining logical blocks may be unknown for some device types.

The block length specifies the length in bytes of each logical block described by the block descriptor. For sequential-access devices, a block length of zero indicates that the logical block size written to the medium is specified by the transfer length field in the command descriptor block (see 10.2.4 and 10.2.14)

The mode page format is defined in table 94.

Table 94 - Mode page format

Bit / Byte	7	6	5	4	3	2	1	0
0	PS	Reserved	Page code					
1	Page length (n-1)							
2	Mode parameters							
n								

Each mode page contains a page code, a page length, and a set of mode parameters. The page codes are defined in this subclause and in the mode parameter subclauses of the specific device type.

When using the MODE SENSE command, a parameters savable (PS) bit of one indicates that the mode page can be saved by the target in a non-volatile, vendor-specific location. A PS bit of zero indicates that the supported parameters cannot be saved. When using the MODE SELECT command, the PS bit is reserved.

The page code field identifies the format and parameters defined for that mode page. Some page codes are defined as applying to all device types and other page codes are defined for the specific device type.

When using the MODE SENSE command, if page code 00h (vendor-specific page) is implemented, the target shall return that page last in response to a request to return all pages (page code 3Fh). When using the MODE SELECT command, this page should be sent last.

The page length field specifies the length in bytes of the mode parameters that follow. If the initiator does not set this value to the value that is returned for the page by the MODE SENSE command, the target shall terminate the command with CHECK CONDITION status. The sense key shall be set to ILLEGAL REQUEST with the additional sense code set to INVALID FIELD IN PARAMETER LIST. The target is permitted to implement a mode page that is

Copyright International Organization for Standardization
Provided by IHS under license with ISO
No reproduction or networking permitted without license from IHS Not for Resale

less than the full page length defined in this International Standard, provided no field is truncated and the page length field correctly specifies the actual length implemented.

The mode parameters for each page are defined in the following subclauses, or in the mode parameters subclause for the specific device type. Mode parameters not implemented by the target shall be set to zero.

Table 95 defines the mode pages that are applicable to all device types that include the MODE SELECT and MODE SENSE commands.

Table 95 - Mode page codes

Page code	Description	Subclause
0Ah	Control mode page	8.3.3.1
02h	Disconnect-reconnect page	8.3.3.2
09h	Peripheral device page	8.3.3.3
01h	(See specific device type)	
03h - 08h	(See specific device type)	
0Bh - 1Fh	(See specific device type)	
00h	Vendor-specific (does not require page format)	
20h - 3Eh	Vendor-specific (page format required)	
3Fh	Return all pages (valid only for the MODE SENSE command)	

8.3.3.1 Control mode page

The control mode page (see table 96) provides controls over several SCSI-2 features that are applicable to all device types such as tagged queuing, extended contingent allegiance, asynchronous event notification, and error logging.

Table 96 - Control mode page

Bit / Byte	7	6	5	4	3	2	1	0
0	PS	Reserved	Page code (0Ah)					
1	Page length (06h)							
2	Reserved							RLEC
3	Queue algorithm modifier				Reserved		QErr	DQue
4	EECA	Reserved				RAENP	UAAENP	EAENP
5	Reserved							
6	(MSB) Ready AEN holdoff period							
7	(LSB)							

A report log exception condition (RLEC) bit of one specifies that the target shall report log exception conditions as described in 8.3.2. A RLEC bit of zero specifies that the target shall not report log exception conditions.

The queue algorithm modifier field (see table 97) specifies restrictions on the algorithm used for reordering commands that are tagged with the SIMPLE QUEUE TAG message.

Copyright International Organization for Standardization
Provided by IHS under license with ISO
No reproduction or networking permitted without license from IHS Not for Resale

Table 97 - Queue algorithm modifier

Value	Definition
0h	Restricted reordering
1h	Unrestricted reordering allowed
2h - 7h	Reserved
8h - Fh	Vendor-specific

A value of zero in this field specifies that the target shall order the actual execution sequence of the commands with a SIMPLE QUEUE tag such that data integrity is maintained for that initiator. This means that, if the transmission of new commands is halted at any time, the final value of all data observable on the medium shall have exactly the same value as it would have if the commands had been executed in the same received sequence without tagged queuing. The restricted reordering value shall be the default value.

A value of one in this field specifies that the target may reorder the actual execution sequence of the commands with a SIMPLE QUEUE tag in any manner. Any data integrity exposures related to command sequence order are explicitly handled by the initiator through the selection of appropriate commands and queue tag messages.

A queue error management (QErr) bit of zero specifies that remaining suspended I/O process shall resume after the contingent allegiance condition or extended contingent allegiance condition (see 7.8).

A QErr bit of one specifies all remaining suspended I/O processes shall be aborted after the contingent allegiance condition or extended contingent allegiance condition (see 7.8). A unit attention condition (see 7.9) shall be generated for each initiator that had a suspended I/O process aborted except for the initiator that had the contingent allegiance condition or extended contingent allegiance condition. The target shall set the additional sense code to TAGGED COMMANDS CLEARED BY ANOTHER INITIATOR.

A disable queuing (DQue) bit of zero specifies that tagged queuing shall be enabled if the target supports tagged queuing. A DQue bit of one specifies that tagged queuing shall be disabled. Any queued commands for that I_T_x nexus shall be aborted. Any subsequent queue tag message received shall be rejected with a MESSAGE REJECT message and the I/O process shall be executed as an untagged command (see 7.8.1).

An enable extended contingent allegiance (EECA) bit of one specifies that extended contingent allegiance is enabled (see 7.7). An EECA bit of zero specifies that extended contingent allegiance is disabled.

The RAENP, UAAENP, and EAENP bits enable specific events to be reported via the asynchronous event notification protocol. When all three bits are zero, the target shall not create asynchronous event notifications.

A ready AEN permission (RAENP) bit of one specifies that the target may issue an asynchronous event notification upon completing its initialization sequence instead of generating a unit attention condition. A RAENP bit of zero specifies that the target shall not issue an asynchronous event notification upon completing its initialization sequence.

NOTE 100 If the target's default value for the RAENP bit is one and it does not implement saved parameters or include a hardware switch, then it may not be possible to disable the initialization sequence asynchronous event notification.

A unit attention AEN permission (UAAENP) bit of one specifies that the target may issue an asynchronous event notification instead of creating a unit attention condition upon detecting an event that would cause a unit attention condition (other than upon completing an initialization sequence). A UAAENP bit of zero specifies that the target shall not issue an asynchronous event notification instead of creating a unit attention condition.

An error AEN permission (EAENP) bit of one specifies that the target may issue an asynchronous event notification upon detecting a deferred error condition instead of waiting to report the deferred error on the next command. An EAENP bit of zero specifies that the target shall not report deferred error conditions via an asynchronous event notification.

Copyright International Organization for Standardization
Provided by IHS under license with ISO
No reproduction or networking permitted without license from IHS Not for Resale

The ready AEN holdoff period field specifies the minimum time in milliseconds after the target starts its initialization sequence that it shall delay before attempting to issue an asynchronous event notification. This value may be rounded up as defined in 7.5.4.

8.3.3.2 Disconnect-reconnect page

The disconnect-reconnect page (see table 98) provides the initiator the means to tune the performance of the SCSI bus.

Table 98 - Disconnect-reconnect page

Bit / Byte	7	6	5	4	3	2	1	0
0	PS	Reserved			Page code (02h)			
1					Page length (0Eh)			
2					Buffer full ratio			
3					Buffer empty ratio			
4	(MSB)							
5					Bus inactivity limit			(LSB)
6	(MSB)							
7					Disconnect time limit			(LSB)
8	(MSB)							
9					Connect time limit			(LSB)
10	(MSB)							
11					Maximum burst size			(LSB)
12					Reserved			DTDC
13					Reserved			
14					Reserved			
15					Reserved			

The buffer full ratio field indicates to the target, on read operations, how full the buffer should be prior to attempting a reselection. Targets that do not implement the requested ratio should round down to the nearest implemented ratio as defined in 7.5.4.

The buffer empty ratio field indicates to the target, on write operations, how empty the buffer should be prior to attempting a reselection. Targets that do not implement the requested ratio should round down to the nearest implemented ratio as defined in 7.5.4.

The buffer full and buffer empty ratios are numerators of a fractional multiplier that has 256 as its denominator. A value of zero indicates that the target determines when to initiate reselection consistent with the disconnect time limit parameter. These parameters are advisory to the target.

NOTE 101 As an example, consider a target with ten 512-byte buffers and a specified buffer full ratio of 3Fh. The formula is: INTEGER((ratio/256)*number of buffers). Thus INTEGER((3Fh/256)*10) = 2. The target should attempt to reselect the initiator on read operations whenever two or more buffers are full.

Copyright International Organization for Standardization
Provided by IHS under license with ISO
No reproduction or networking permitted without license from IHS Not for Resale

The bus inactivity limit field indicates the maximum time in 100 μs increments that the target is permitted to assert the BSY signal without a REQ/ACK handshake. If the bus inactivity limit is exceeded the target shall attempt to disconnect if the initiator has granted the disconnect privilege (see 6.6.7) and it is not restricted by DTDC. This value may be rounded as defined in 7.5.4. A value of zero indicates that there is no bus inactivity limit.

The disconnect time limit field indicates the minimum time in 100 μs increments that the target shall wait after releasing the SCSI bus before attempting reselection. This value may be rounded as defined in 7.5.4. A value of zero indicates that there is no disconnect time limit.

The connect time limit field indicates the maximum time in 100 μs increments that the target is allowed to use the SCSI bus before disconnecting, if the initiator has granted the disconnect privilege (see 6.6.7) and it is not restricted by DTDC. This value may be rounded as defined in 7.5.4. A value of zero indicates that there is no connect time limit.

The maximum burst size field indicates the maximum amount of data that the target shall transfer during a data phase before disconnecting if the initiator has granted the disconnect privilege. This value is expressed in increments of 512 bytes (e.g. a value of one means 512 bytes, two means 1024 bytes, etc.). A value of zero indicates there is no limit on the amount of data transferred per connection.

The data transfer disconnect control (DTDC) field (see table 99) defines further restrictions on when a disconnect is permitted.

Table 99 - Data transfer disconnect control

DTDC	Description
00b	Data transfer disconnect control is not used. Disconnect is controlled by the other fields in this page.
01b	A target shall not attempt to disconnect once the data transfer of a command has started until all data that the command is to transfer has been transferred. The connect time limit and bus inactivity limits are ignored during the data transfer.
10b	Reserved
11b	A target shall not attempt to disconnect once the data transfer of a command has started, until the command is complete. The connect time limit and bus inactivity limit are ignored once data transfer has started.

If DTDC is non-zero and the maximum burst size is non-zero, the target shall return CHECK CONDITION status. The sense key shall be set to ILLEGAL REQUEST and the additional sense code set to ILLEGAL FIELD IN PARAMETER LIST.

Copyright International Organization for Standardization
Provided by IHS under license with ISO
No reproduction or networking permitted without license from IHS Not for Resale

8.3.3.3 Peripheral device page

The peripheral device page (see table 100) is used to pass vendor-specific information between an initiator and a peripheral interface below the target (i.e. between the target and the peripheral device). This International Standard does not define the format of this data, except to provide a standard header.

Table 100 - Peripheral device page

Bit / Byte	7	6	5	4	3	2	1	0
0	PS	Reserved	Page code (09h)					
1	Page length (n-1)							
2	(MSB) Interface identifier							
3	(LSB)							
4	Reserved							
5	Reserved							
6	Reserved							
7	Reserved							
8	Vendor-specific							
n								

Interface identifier codes are defined in the table 101.

Table 101 - Interface identifier codes

Code value	Interface	Reference International Standard
0000h	Small computer system interface	ISO 9316:1989
0001h	Storage module interface	ISO DIS 9324
0002h	Enhanced small device interface	ISO DIS 10222
0003h	Intelligent peripheral interface-2	ISO 9318-2:1990
0004h	Intelligent peripheral interface-3	ISO 9318-3:1990 ISO 9318-4:1992
0005h - 7FFFh	Reserved	
8000h - FFFFh	Vendor-specific	

8.3.4 Vital product data parameters

This clause describes the optional vital product data page structure and the vital product data pages (see table 102) that are applicable to all SCSI devices. These pages are optionally returned by the INQUIRY command (8.2.5) and contain vendor-specific product information about a target or logical unit. The vital product data may include vendor identification, product identification, unit serial numbers, device operating definitions, manufacturing data, field replaceable unit information, and other vendor-specific information. This International Standard defines the structure of the vital product data, but not the contents.

Copyright International Organization for Standardization
Provided by IHS under license with ISO
No reproduction or networking permitted without license from IHS Not for Resale

Table 102 - Vital product data page codes

Page code	Description	Subclause
82h	ISO/IEC 646 implemented operating definition page	8.3.4.1
01h - 7Fh	ISO/IEC 646 information page	8.3.4.2
81h	Implemented operating definition page	8.3.4.3
00h	Supported vital product data pages	8.3.4.4
80h	Unit serial number page	8.3.4.5
83h - BFh	Reserved	
C0h - FFh	Vendor-specific	

8.3.4.1 ISO/IEC 646 implemented operating definition page

The ISO/IEC 646 implemented operation definition page (see table 103) contains operating definition description data for all operating definitions implemented by the target. The contents of this data is not defined by this International Standard.

Table 103 - ISO/IEC 646 implemented operating definition

Bit / Byte	7	6	5	4	3	2	1	0
0	Peripheral qualifier			Peripheral device type				
1	Page code (82h)							
2	Reserved							
3	Page length (n-3)							
4	ISO/IEC 646 operating definition description length (m-4)							
5 — m	ISO/IEC 646 operating definition description data							
m+1 — n	Vendor-specific description data							

The peripheral qualifier field and the peripheral device type field are as defined in 8.2.5.1.

The page length field specifies the length of the following page data. If the allocation length is less than the length of the data to be returned, the page length shall not be adjusted to reflect the truncation.

The ISO/IEC 646 operating definition description length field specifies the length in bytes of the ISO/IEC 646 operating definition description data that follows. If the allocation length is less than the length of data to be returned, the ISO/IEC 646 operating definition description length shall not be adjusted to reflect the truncation. A value of zero in this field indicates that no ISO/IEC 646 operating definition description data is available.

The ISO/IEC 646 operating definition description data field contains the ISO/IEC 646 operating definition description data for the target or logical unit. The data in this field shall be formatted in lines (or character strings). Each line shall contain only graphic codes (i.e. code values 20h through 7Eh) and shall be terminated with a NULL (00h) character.

Copyright International Organization for Standardization
Provided by IHS under license with ISO
No reproduction or networking permitted without license from IHS Not for Resale

8.3.4.2 ISO/IEC 646 information page

The ISO/IEC 646 information page (see table 104) returns information for the field replaceable unit code returned in the REQUEST SENSE data (see 8.2.14).

Table 104 - ISO/IEC 646 information page

Bit / Byte	7	6	5	4	3	2	1	0
0	Peripheral qualifier			Peripheral device type				
1	Page code (01h - 7Fh)							
2	Reserved							
3	Page length (n-3)							
4	ISO/IEC 646 length (m-4)							
5 — m	ISO/IEC 646 information							
m+1 — n	Vendor-specific information							

The peripheral qualifier field and the peripheral device type field are defined in 8.2.5.1.

The page code field contains the same value as in the page code field of the INQUIRY command descriptor block (see 8.2.5) and is associated with the field replaceable unit code returned by the REQUEST SENSE command.

NOTE 102 The field replaceable unit field in the sense data provides for 255 possible codes, while the page code field provides for only 127 possible codes. Thus it is not possible to return ISO/IEC 646 information pages for the upper code values.

The page length field specifies the length of the following page data. If the allocation length of the command descriptor block is too small to transfer all of the page, the page length shall not be adjusted to reflect the truncation.

The ISO/IEC 646 length field specifies the length in bytes of the ISO/IEC 646 information that follows. If the allocation length is less than the length of the data to be returned, the ISO/IEC 646 length shall not be adjusted to reflect the truncation. A value of zero in this field indicates that no ISO/IEC 646 information is available for the specified page code.

The ISO/IEC 646information field contains ISO/IEC 646information concerning the field replaceable unit identified by the page code. The data in this field shall be formatted in one or more lines (or character strings). Each line shall contain only graphic codes (i.e. code values 20h through 7Eh) and shall be terminated with a NULL (00h) character.

The contents of the vendor-specific information field is not defined in this International Standard.

8.3.4.3 Implemented operating definition page

The implemented operating definition page (see table 105) defines the current operating definition, the default operating definition, and the operating definitions implemented by the target. These operating definition values are specified in the CHANGE DEFINITION command (see 8.2.1).

Copyright International Organization for Standardization
Provided by IHS under license with ISO
No reproduction or networking permitted without license from IHS Not for Resale

Table 105 - Implemented operating definition page

Bit / Byte	7	6	5	4	3	2	1	0
0	Peripheral qualifier			Peripheral device type				
1	Page code (81h)							
2	Reserved							
3	Page length (n-3)							
4	Reserved	Current operating definition						
5	SavImp	Default operating definition						
6	SavImp	Supported operating definition list						
n	SavImp							

The peripheral qualifier field and the peripheral device type field are defined in 8.2.5.1.

The page length field specifies the length of the following operating definitions. If the allocation length of the command descriptor block is too small to transfer all of the page, the page length shall not be adjusted to reflect the truncation.

For each operating definition, there is an associated save implemented (SavImp) bit. A SavImp bit of zero indicates that the corresponding operating definition parameter cannot be saved. A SavImp bit of one indicates that the corresponding operating definition parameter can be saved.

All returned operating definitions use the codes defined in table 33. The current operating definition field returns the value of the present operating definition. If no operating definition is saved, the default operating definition field returns the value of the operating definition the target uses when power is applied. The supported operating definition list returns one or more operating definitions implemented by the target.

Copyright International Organization for Standardization
Provided by IHS under license with ISO
No reproduction or networking permitted without license from IHS Not for Resale

8.3.4.4 Supported vital product data pages

The supported vital product data pages are shown in table 106.

Table 106 - Supported vital product data pages

Bit / Byte	7	6	5	4	3	2	1	0
0	Peripheral qualifier			Peripheral device type				
1	Page code (00h)							
2	Reserved							
3	Page length (n-3)							
4	Supported page list							
n								

The peripheral qualifier field and the peripheral device type field are defined in 8.2.5.1.

The page code field shall be set to the value of the page code field in the INQUIRY command descriptor block (see 8.2.5).

The page length field specifies the length of the supported page list. If the allocation length is too small to transfer all of the page, the page length shall not be adjusted to reflect the truncation.

The supported page list field shall contain a list of all vital product data page codes implemented for the target or logical unit in ascending order beginning with page code 00h.

Copyright International Organization for Standardization
Provided by IHS under license with ISO
No reproduction or networking permitted without license from IHS Not for Resale

8.3.4.5 Unit serial number page

This page (see table 107) provides a product serial number for the target or logical unit.

Table 107 - Unit serial number page

Bit / Byte	7	6	5	4	3	2	1	0
0	Peripheral qualifier			Peripheral device type				
1	Page code (80h)							
2	Reserved							
3	Page length (n-3)							
4 — n	Product serial number							

The peripheral qualifier field and the peripheral device type field are defined in 8.2.5.1.

The page length field specifies the length of the product serial number. If the allocation length is too small to transfer all of the page, the page length shall not be adjusted to reflect the truncation.

The product serial number field contains ISO/IEC 646 character data that is vendor-specific. The least significant ISO/IEC 646 character of the serial number shall appear as the last byte of a successful data transfer. If the product serial number is not available, the target shall return ISO/IEC 646 character spaces (20h) in this field.

Copyright International Organization for Standardization
Provided by IHS under license with ISO
No reproduction or networking permitted without license from IHS Not for Resale

9 Direct-access devices

9.1 Direct-access device model

Direct-access devices store blocks of data for later retrieval. Each block of data is stored at a unique logical block address. An initiator issues WRITE commands to store the blocks of data (write operations) and READ commands to retrieve the blocks of data (read operations). Other commands issued by the initiator may also cause write and read operations to occur. A write operation causes a block of data to be written on the medium. A read operation causes a block of data to be read from the medium. A verify operation confirms that a block of data can be read without error from the medium.

Blocks of data are stored by a process that causes localized changes or transitions within the medium. The changes made to the medium to store the blocks of data may be volatile (i.e. not retained through a power cycle) or non-volatile (retained through a power cycle). The medium may be divided in parts that are used for data blocks, parts that are reserved for defect management, and parts that are reserved for use by the controller for the management of the device.

9.1.1 Removable medium

The medium may be removable (e.g. used in a floppy disk drive) or non-removable (e.g. used in a hard disk drive). Removable medium is contained within a cartridge (or jacket) to prevent damage to the recording surfaces. The combination of medium and cartridge is often called a volume.

A volume has an attribute of being mounted or de-mounted on a suitable transport mechanism. A volume is mounted when the direct-access device is capable of performing write or read operations to the medium. A mounted volume may not be accessible by an initiator if it is reserved by another initiator. A volume is de-mounted at any other time (e.g. during loading, unloading, or storage).

An initiator may check whether a volume is mounted by issuing a TEST UNIT READY command. A volume that is loaded may need a START STOP UNIT command issued to become accessible for write or read operations.

The PREVENT ALLOW MEDIUM REMOVAL command allows an initiator to restrict the demounting of the volume. This is useful in maintaining system integrity. If the direct-access device implements cache memory, it must ensure that all logical blocks of the medium contain the most recent data prior to permitting demounting of the volume. If the initiator issues a START STOP UNIT command to eject the cartridge, and the direct-access device is prevented from demounting by the PREVENT ALLOW MEDIUM REMOVAL command, the START STOP unit command is rejected by the direct-access device.

9.1.2 Logical blocks

Blocks of data are stored on the medium along with additional information that the controller uses to manage the storage and retrieval. The format of the additional information is unique and is hidden from the initiator during normal read or write operations. This additional information is often used to identify the physical location of the blocks of data and the address of the logical block, and to provide protection against the loss of the user data.

The address of the first logical block is zero. The address of the last logical block is [n-1], where [n] is the number of logical blocks available on the medium. A READ CAPACITY command may be issued to determine the value of [n-1]. If a command is issued that requests access to a logical block not within the capacity of the medium, the command is terminated with CHECK CONDITION.

The number of bytes of data contained in a logical block is known as the block length. Each logical block has a block length associated with it. The block length may be different for each logical block on the medium. However, in a typical device only one block length is used at a time. The block descriptor in the MODE SENSE data describes the block lengths that are used on the medium. A MODE SELECT command can be used to set up extents. An

--`,,```,,,,````-`-`,,`,,`,`,,`---

Copyright International Organization for Standardization
Provided by IHS under license with ISO
No reproduction or networking permitted without license from IHS Not for Resale

extent is a specified number of logical blocks that have the specified block length. The FORMAT UNIT command is typically required to change the block length of devices that support variable block lengths and make the extents that were setup active.

The location of a logical block on the medium does not have a relationship to the location of any other logical block. However, in a typical device the logical blocks are located in an ascending order. The time to access the logical block at address [x] and then the logical block at address [$x+1$] need not be less than time to access [x] and then [$x+100$]. The READ CAPACITY with a PMI bit of one is useful in determining where longer access times occur.

9.1.3 Ready state

A direct-access device is ready when medium access commands can be executed. A device using removable media is usually not ready until a volume is mounted. Such a device, with a volume not mounted, normally returns CHECK CONDITION status and sets the sense key to NOT READY.

Some direct-access devices may be switched from being ready to being not ready by using the START STOP UNIT command. An initiator may need to issue a START UNIT command to bring a device ready.

9.1.4 Initialization

Many direct-access devices require initialization prior to write or read operations. This initialization is usually performed by a FORMAT UNIT command. Parameters related to the geometry and performance characteristics can be set with the MODE SELECT command prior to the format operation. Some devices are initialized by means not specified in this International Standard. The time at which this occurs is specific to the implementation of the direct-access device.

Devices using a non-volatile medium typically save the parameters and only need to be initialized once. However, some mode parameters may need to be initialized after each power-on and reset. A catastrophic failure of the direct-access device may require the FORMAT UNIT command to be reissued.

Devices that use a volatile medium may need to be initialized at each power-on prior to the execution of read or write operations. Mode parameters may also need initialization.

9.1.5 Medium defects

Any medium has the potential for defects that can cause user data to be lost. Therefore, each logical block may contain information that allows the detection of changes to the user data caused by defects in the medium or other phenomena, and may also allow the data to be reconstructed following the detection of such a change. Some devices provide the initiator control through use of the mode parameters. Some devices allow the initiator to examine and modify the additional information by using the READ LONG and WRITE LONG commands. Some media having a very low probability of defects may not require these structures.

Defects may also be detected and managed during execution of the FORMAT UNIT command. The FORMAT UNIT command defines four sources of defect information. These defects may be reassigned or avoided during the initialization process so that they do not appear in a logical block.

Defects may also be avoided after initialization. The initiator issues a REASSIGN BLOCKS command to request that the specified logical block address be reassigned to a different part of the medium. This operation can be repeated if a new defect appears at a later time. The total number of defects that may be handled in this manner can be specified in the mode parameters.

Defect management on direct-access devices is usually vendor-specific. Devices not using a removable medium typically optimize the defect management for capacity or performance or both. Devices that use a removable medium typically do not support defect management (e.g. some floppy disk drives) or use defect management that is based on the ability to interchange the medium.

Copyright International Organization for Standardization
Provided by IHS under license with ISO
No reproduction or networking permitted without license from IHS Not for Resale

9.1.6 Data cache

Some direct-access devices implement cache memory. A cache memory is usually an area of temporary storage in the direct-access device with a fast access time that is used to enhance performance. It exists separately from the blocks of data stored and is normally not directly accessible by the initiator. Use of cache memory for write or read operations typically reduces the access time to a logical block and can increase the overall data throughput.

During read operations, the direct-access device uses the cache memory to store blocks of data that the initiator may request at some future time. The algorithm used to manage the cache memory is not part of this International Standard. However, parameters are provided to advise the direct-access device about future requests, or to restrict the use of cache memory for a particular request.

During write operations, the direct-access device uses the cache memory to store data that is written to the medium at a later time. This is called a write-back caching algorithm. Thus the command may complete prior to blocks of data being written to the medium. As a result of using a write-back caching algorithm there is a period of time when the data may be lost if a power or a hardware failure occurs. There is also the possibility of an error occurring during the write operation. If an error occurred during the write, it may be reported as a deferred error on a later command. However, the initiator can request write-through caching to prevent these circumstances from arising.

When the cache memory fills up with blocks of data that are being kept for possible future access, new blocks of data that are to be kept must replace those currently in cache memory. The disable page out (DPO) bit is used to control replacement of logical blocks in the cache. For write operations, setting this bit to one advises the direct-access device to not replace existing blocks in the cache memory with the write data. For read operations, setting this bit to one causes blocks of data that are being read to not replace existing ones in the cache memory.

Sometimes the initiator may wish to have the blocks of data read from the medium instead of from the cache memory. The force unit access (FUA) bit is used to indicate that the direct-access device shall access the physical medium. For a write operation, setting FUA to one causes the direct-access device to complete the data write to the physical medium before completing the command. For a read operation, setting FUA to one causes the logical blocks to be retrieved from the physical medium.

When the DPO and FUA bits are both set to one, write and read operations bypass the cache memory.

When a VERIFY command is executed, a forced unit access is implied, since the blocks of data stored on the medium are being verified. Furthermore, a SYNCHRONIZE CACHE operation (see below) is also implied to write unwritten blocks of data still in the cache memory. These blocks of data must be stored on the medium before the verify operation can begin. The DPO bit is provided since the VERIFY command may cause the replacement of blocks in the cache. The above also applies to the WRITE AND VERIFY command.

Commands may be implemented by the direct-access device that allow the initiator to control other behaviour of the cache memory:

— LOCK UNLOCK CACHE controls whether certain logical blocks will be held in the data cache for future use. Locking a logical block prevents its replacement by a future access. Unlocking a logical block exposes it to possible replacement by a future access (see 9.2.2).

— PRE-FETCH causes a set of logical blocks requested by the initiator to be read into the data cache for possible future access. The blocks fetched are subject to later replacement unless they are locked (see 9.2.3).

— SYNCHRONIZE CACHE forces any pending write data in the requested set of logical blocks to be stored in the physical medium. This command can be used to ensure that the data was written and any errors reported (see 9.2.18).

— The MODE SELECT command defines a page for the control of cache behavior and handles certain basic elements of cache replacement algorithms (see 9.3.3.1).

Copyright International Organization for Standardization
Provided by IHS under license with ISO
No reproduction or networking permitted without license from IHS Not for Resale

9.1.7 Reservations

The access enabled or access disabled condition determines when an initiator may store or retrieve user data on all or part of the medium. Access may be restricted for read operations, write operations, or both. This attribute may be controlled by an external mechanism or by the RESERVE and RELEASE commands (see 9.2.12 and 9.2.11).

The RESERVE and RELEASE commands define how different types of restricted access may be achieved, and to whom the access is restricted. This subclause describes the interaction of the initiator that requested the reservation, and the other initiators.

An initiator uses reservations to gain a level of exclusivity in access to all or part of the medium for itself or another initiator. It is expected that the reservation will be retained until released. The direct-access device must ensure that the initiator with the reservation is able to access the reserved media within the operating parameters established by that initiator.

The following paragraphs explain, on a command by command basis, the appropriate target response when a reservation exists. Unless otherwise noted, the appropriate response to an initiator that issues a command to a direct-access device that is reserved to another initiator is RESERVATION CONFLICT status.

The CHANGE DEFINITION command is dealt with as follows. If any initiator has an extent reservation on a direct-access device, no other initiator may affect the operating definition of that initiator by use of this command. If the direct-access device allows different operating definitions for each initiator, then there is no conflict; otherwise, a reservation conflict occurs.

The COMPARE, COPY, and COPY AND VERIFY commands are evaluated for reservation conflict as if they were normal write and read operations even when a direct-access device is requested to copy to or from itself. For example, if a COPY is issued to logical unit 0 that requests the direct-access device to copy from logical unit 0 to logical unit 1, access to logical unit 1 must also be evaluated for conflict.

The FORMAT UNIT, PREVENT ALLOW MEDIUM REMOVAL (with a prevent bit of one), REZERO UNIT, and START STOP UNIT commands return a RESERVATION CONFLICT status if any other initiator has an extent reservation on a direct-access device.

The INQUIRY and REQUEST SENSE commands are not affected by any kind of reservation.

The LOG SELECT, LOG SENSE, MODE SENSE, TEST UNIT READY, READ CAPACITY (PMI set to zero), READ BUFFER, WRITE BUFFER, and READ DEFECT DATA commands are not affected by extent reservations.

The SEEK, LOCK UNLOCK CACHE, PRE-FETCH, and SYNCHRONIZE CACHE commands are evaluated for reservation conflict as if they were normal write or read operations.

The MODE SELECT command is dealt with as follows. If an initiator has an extent reservation on a direct-access device, and another initiator attempts one of these commands, a reservation conflict occurs if the command affects the manner in which access of the extent by the first initiator is performed. If the command does not affect access to the extent, or parameters are saved for each initiator, then a conflict does not occur.

The SEND DIAGNOSTIC, RECEIVE DIAGNOSTIC RESULTS commands conflict with an extent reservation only if they affect access to the extent (as with MODE SELECT).

The REASSIGN BLOCKS command may not reassign a block that is in an extent reserved to another initiator.

The SET LIMITS command generates a reservation conflict if the logical blocks specified are within an extent reserved to another initiator.

ALL other commands are that request read or write operations are evaluated for reservation conflict as described in the RESERVE command.

Copyright International Organization for Standardization
Provided by IHS under license with ISO
No reproduction or networking permitted without license from IHS Not for Resale

When a system is integrated with more than one initiator, there must be agreement between the initiators as to how media is reserved and released during operations, otherwise, an initiator may be locked out of access to a target in the middle of an operation. For example, initiator 'A' has a write operation in progress to a direct-access device which has data stored in cache memory. Then, initiator 'B' issues a RESERVE command to the direct-access device. As a result, initiator 'A' is locked out of issuing a SYNCHRONIZE CACHE command to ensure the integrity of the data. To prevent this from happening, initiator 'A' should issue a RESERVE prior to the write command.

9.1.8 Seek and rezero

The SEEK command provides a way for the initiator to position the device in preparation for access to a particular logical block at some later time. Since this positioning action is implicit in other commands, the SEEK command may not be useful with some direct-access devices.

The REZERO UNIT command is provided to bring the direct-access device to a known condition. This International Standard does not specify the condition. The REZERO UNIT command is used in some devices to position the actuator at cylinder zero. Some devices return GOOD status without attempting any action.

9.1.9 Notched drives

A notched (also called partitioned or zoned) drive has areas of the medium in which the drive geometry changes. In the simplest case, the entire medium consists of a single notch. Multiple notches are often used to increase capacity of the drive. The notch page is used to indicate the notch for assignment of values to the parameters in the format device page. By sequencing the notch page through each notch, the format device parameters of each notch are set. This is usually done prior to initialization by the FORMAT UNIT command.

9.1.10 Rotational position locking

Rotational position locking is an optional feature implemented in some direct-access devices to allow the synchronization of spindles between a number of devices. The rotational position offset feature allows devices to synchronize spindles at offsets from index. This may be useful in improving performance in systems that implement arrays of devices.

9.1.11 Relative addressing

Relative addressing is a technique useful in accessing structured data in a uniform manner. Relative addressing is only allowed when commands are linked. An example of relative addressing and linking for SEARCH DATA commands appropriate to direct-access devices is given in 7.4.3.

The SET LIMITS command is provided to define the limits of a linked chain of relative addressing commands. This gives an additional protection against exceeding a particular set of blocks. The SET LIMITS command has no effect on any other initiator.

9.1.12 Error reporting

If any of the following conditions occur during the execution of a command, the target shall return CHECK CONDITION status. The appropriate sense key and additional sense code should be set. The following list illustrates some error conditions and the applicable sense keys. The list does not provide an exhaustive enumeration of all conditions that may cause the CHECK CONDITION status.

Condition	Sense key
Invalid logical block address	ILLEGAL REQUEST
Unsupported option requested	ILLEGAL REQUEST
Target reset or medium change since last command from this initiator	UNIT ATTENTION

Copyright International Organization for Standardization
Provided by IHS under license with ISO
No reproduction or networking permitted without license from IHS Not for Resale

Self diagnostic failed	HARDWARE ERROR
Unrecovered read error	MEDIUM ERROR or HARDWARE ERROR
Recovered read error	RECOVERED ERROR
Overrun or other error that might be resolved by repeating the command	ABORTED COMMAND
Attempt to write on write protected medium	DATA PROTECT

In the case of an invalid logical block address, the sense data information field shall be set to the logical block address of the first invalid address.

In the case of an attempt to read a blank or previously unwritten block, the information field shall be set to the logical block address of the first blank block encountered. The data read up to that block shall be transferred (optical memory and write-once devices only).

In the case of an attempt to write a previously written block when blank checking is enabled, the information field shall be set to the logical block address of the first non-blank block encountered (optical memory and write-once devices only).

9.1.13 Examples

The following examples show some typical variations of the direct-access device. Other variations are possible.

9.1.13.1 Rotating media

The typical application of a direct-access device is a disk drive. The medium is a disk coated with a material in which flux changes may be induced. The disk drive allows direct and random access to the medium. This is done with an actuator that positions the read-write head, and a rotating disk. Data is stored and retrieved through the interaction of the read-write head and the disk.

The disk is typically divided into cylinders. Each cylinder is typically divided into tracks. Each track is typically divided into sectors. A cylinder is a set of tracks that can be accessed without movement of the actuator. A track is a recording path over which the read-write head travels during one rotation of the disk. A sector is a part of a track that contains the stored data blocks.

A logical block is stored in one or more sectors, or a sector may store more than one logical block. A sector is typically made up of a header, data and a trailer. The header contains a preamble used to synchronize read circuits to the data, an address field to identify the sector, flags to use for defect management, and a checksum that validates the header. The data contains the block of data. The trailer contains checksum or error correction information. The checksum or the error correction information allows the correction of data for medium defects.

A disk drive is ready when the disks are rotating at the correct speed and the read-write circuitry is powered and ready to access the disks. Some disks, particularly removable disks, require the user to issue load or start commands to bring the disk drive to the ready state.

A disk drive will typically have to be formatted prior to the initial access. Exceptions to this are drives that are formatted at the factory and some optical drives with pre-formatted media (see 13.1). A disk drive format will typically create the headers for each sector and initialize the data field. The MODE SELECT command is often used at format time to establish the geometry (number of heads and tracks, sectors per track, etc.) and defect management scheme. Disk drives are usually non-volatile.

Copyright International Organization for Standardization
Provided by IHS under license with ISO
No reproduction or networking permitted without license from IHS Not for Resale

The defect management scheme of a disk drive is often shielded from the user, though some aspects can be evaluated and controlled by the initiator. The direct-access device will usually reserve some sectors and tracks for recording defect lists and for reassigning defective blocks. The READ LONG and WRITE LONG commands will typically access the user data and checksum portions of the data field so that defects may be induced by the initiator to test the defect detection logic of the direct-access device.

Notches find their most typical use in a rotating disk drive. On a disk, the inner tracks are physically shorter than the outer tracks. As a result, if each track is made to store the same number of data bits, the data is packed more densely on the inner tracks than the outer tracks. By using notches, the outer tracks may be made to contain a different number of sectors than the inner tracks, while balancing the data density. This results in increased capacity.

9.1.13.2 Sequential media

Some tape devices are implemented as a direct access device so that they can be used in disk oriented operating system environments. These devices are sometimes referred to as random access tape or floppy tape. These devices might be thought of as a disk drive with one or more long tracks. Access time to a logical block is usually longer than for a disk drive, since the tape must be fast forwarded or rewound to the block. As a result, the SEEK command will often be more useful for a tape than for a disk. The only way an initiator may determine if a direct-access device is a tape is by using the medium type code returned by the MODE SENSE command.

9.1.13.3 Memory media

Memory media includes devices that are traditionally used for primary storage within computer systems, such as solid state static or dynamic random access memories (SRAM or DRAM), or magnetic core or bubble memory. These devices are typically non-mechanical, and therefore the entire physical medium may be accessed in virtually the same access time. The data is typically accessed as a bit or byte and this also speeds access time. Memory devices typically store less data than disks or tapes, and are usually volatile when not protected by battery backup.

Copyright International Organization for Standardization
Provided by IHS under license with ISO
No reproduction or networking permitted without license from IHS Not for Resale

9.2 Commands for direct-access devices.

The commands for direct-access devices shall be as shown in table 108.

Table 108 - Commands for direct-access devices

Command name	Operation code	Type	Subclause
CHANGE DEFINITION	40h	O	8.2.1
COMPARE	39h	O	8.2.2
COPY	18h	O	8.2.3
COPY AND VERIFY	3Ah	O	8.2.4
FORMAT UNIT	04h	M	9.2.1
INQUIRY	12h	M	8.2.5
LOCK UNLOCK CACHE	36h	O	9.2.2
LOG SELECT	4Ch	O	8.2.6
LOG SENSE	4Dh	O	8.2.7
MODE SELECT(06)	15h	O	8.2.8
MODE SELECT(10)	55h	O	8.2.9
MODE SENSE(06)	1Ah	O	8.2.10
MODE SENSE(10)	5Ah	O	8.2.11
PRE-FETCH	34h	O	9.2.3
PREVENT ALLOW MEDIUM REMOVAL	1Eh	O	9.2.4
READ(06)	08h	M	9.2.5
READ(10)	28h	M	9.2.6
READ BUFFER	3Ch	O	8.2.12
READ CAPACITY	25h	M	9.2.7
READ DEFECT DATA	37h	O	9.2.8
READ LONG	3Eh	O	9.2.9
REASSIGN BLOCKS	07h	O	9.2.10
RECEIVE DIAGNOSTIC RESULTS	1Ch	O	8.2.13
RELEASE	17h	M	9.2.11
REQUEST SENSE	03h	M	8.2.14
RESERVE	16h	M	9.2.12
REZERO UNIT	01h	O	9.2.13
SEARCH DATA EQUAL	31h	O	9.2.14.1
SEARCH DATA HIGH	30h	O	9.2.14.2
SEARCH DATA LOW	32h	O	9.2.14.3
SEEK(06)	0Bh	O	9.2.15
SEEK(10)	2Bh	O	9.2.15
SEND DIAGNOSTIC	1Dh	M	8.2.15
SET LIMITS	33h	O	9.2.16
START STOP UNIT	1Bh	O	9.2.17
SYNCHRONIZE CACHE	35h	O	9.2.18
TEST UNIT READY	00h	M	8.2.16
VERIFY	2Fh	O	9.2.19
WRITE(06)	0Ah	O	9.2.20
WRITE(10)	2Ah	O	9.2.21
WRITE AND VERIFY	2Eh	O	9.2.22
WRITE BUFFER	3Bh	O	8.2.17
WRITE LONG	3Fh	O	9.2.23
WRITE SAME	41h	O	9.2.24

Key: M = Command implementation is mandatory.
O = Command implementation is optional.

The following operation codes are vendor-specific: 02h, 05h, 06h, 09h, 0Ch, 0Dh, 0Eh, 0Fh, 10h, 11h, 13h, 14h, 19h, 20h, 21h, 22h, 23h, 24h, 26h, 27h, 29h, 2Ch, 2Dh and C0h through FFh. All remaining operation codes for direct-access devices are reserved for future standardization.

Copyright International Organization for Standardization
Provided by IHS under license with ISO
No reproduction or networking permitted without license from IHS Not for Resale

9.2.1 FORMAT UNIT command

The FORMAT UNIT command (see table 109) formats the medium into initiator addressable logical blocks per the initiator defined options. In addition, the medium may be certified and control structures may be created for the management of the medium and defects. There is no guarantee that the medium has or has not been altered.

Table 109 - FORMAT UNIT command

Bit / Byte	7	6	5	4	3	2	1	0
0	Operation code (04h)							
1	Logical unit number			FmtData	CmpLst	Defect list format		
2	Vendor-specific							
3	(MSB) Interleave							
4								(LSB)
5	Control							

The simplest mandatory form of the FORMAT UNIT command (with no format data) accomplishes medium formatting with little initiator control over defect management. The target implementation determines the degree of defect management that is to be performed. Two additional mandatory forms of this command increase the initiator's control over defect management. Several optional forms of this command further increase the initiator's control over defect management, by allowing the initiator to specify which defect list(s) are to be used, to specify defect locations (in several formats), to enable target certification, and to specify what to do in the event that defect lists are not accessible.

The FORMAT UNIT command shall be rejected with RESERVATION CONFLICT status if the logical unit is reserved, or any extent reservation, from any initiator, is active in the specified logical unit.

During the format operation, the target shall respond to commands as follows:

a) In response to all commands except REQUEST SENSE and INQUIRY, the target shall return CHECK CONDITION status unless a reservation conflict exists, in which case RESERVATION CONFLICT status shall be returned.

b) In response to the INQUIRY command, the target shall respond as commanded.

c) In response to the REQUEST SENSE command, unless an error has occurred, the target shall return a sense ey of NOT READY and an additional sense code of LOGICAL UNIT NOT READY FORMAT IN PROGRESS, with the sense-key specific bytes set for progress indication (as described in 8.2.14.1). Refer to 8.2.14.2 for a description of deferred error handling that may occur during the format operation.

NOTE 103 It is recommended that MODE SELECT parameters (if any) be set prior to issuing the FORMAT UNIT command.

During the execution of the FORMAT UNIT command, the target may perform a medium defect management algorithm (which can be controlled by the initiator, using optional forms of this command). Four sources of defect location information (hereafter called defects) are defined as follows:

a) **Primary defect list (Plist).** This is the list of defects, usually supplied by the original manufacturer of the device or medium, that are considered permanent defects. The Plist is located outside of the initiator-accessible logical block space. The Plist is accessible by the target (to reference while formatting), but it is not normally accessible by the initiator except through the READ DEFECT DATA command. Once created, the original Plist shall not be subject to change.

Copyright International Organization for Standardization
Provided by IHS under license with ISO
No reproduction or networking permitted without license from IHS Not for Resale

b) **Target certification list (Clist).** This list includes defects detected by the target during an optional certification process executed during the FORMAT UNIT command. This list shall be added to the Glist.

c) **Data defect list (Dlist).** This list of defect descriptors may be supplied to the target by the initiator in the DATA OUT phase of the FORMAT UNIT command. This list shall be added to the Glist. The defect list length in the defect list header may be zero, in which case there is no Dlist.

d) **Grown defect list (Glist).** The Glist includes all defects sent by the initiator or detected by the target. The Glist does not include the Plist. If the CmpLst bit is zero, the Glist shall include Dlists provided to the target during the previous and the current FORMAT UNIT commands. The Glist shall also include:
   a) defects detected by the format operation during medium certification;
   b) defects previously identified with a REASSIGN BLOCKS command;
   c) defects previously detected by the target and automatically reallocated.

A format data (FmtData) bit of one indicates that the FORMAT UNIT parameter list (see table 110) shall be transferred during the DATA OUT phase. The DATA OUT phase consists of a defect list header (see table 111), followed by an initialization pattern descriptor, followed by zero or more defect descriptors. Each defect descriptor identifies a location on the medium that the target shall map out of the user-accessible area.

Table 110 - FORMAT UNIT parameter list

Bit / Byte	7	6	5	4	3	2	1	0
	Defect list header							
	Initialization pattern descriptor (if any)							
	Defect descriptor(s) (if any)							
0	Defect descriptor 0 (See specific table for length.)							
n								
	. .							
0	Defect descriptor x (See specific table for length.)							
n								

The defect list header (see table 111) provides several optional format control bits. Targets that implement these bits give the initiator additional control over the use of the four defect sources, and the formatting operation. If the initiator attempts to select any function not implemented by the target, the target shall terminate the command with CHECK CONDITION status. The sense key shall be set to ILLEGAL REQUEST and the additional sense code shall be set to INVALID FIELD IN PARAMETER LIST.

Table 111 - Defect list header

Bit / Byte	7	6	5	4	3	2	1	0
0	Reserved							
1	FOV	DPRY	DCRT	STPF	IP	DSP	Immed	VS
2	(MSB) Defect list length							
3	(LSB)							

Copyright International Organization for Standardization
Provided by IHS under license with ISO
No reproduction or networking permitted without license from IHS Not for Resale

A FmtData bit of zero indicates that a DATA OUT phase shall not occur. The source of defect information is not specified.

A complete list (CmpLst) bit of one indicates that the defect list sent by the initiator is a complete list of defects. Any existing defect list except the Plist shall be ignored by the target. As a result, a new Glist is constructed that contains the Dlist (if it is sent by the initiator), and the Clist (if certification is enabled). The target may add any defects it detects during the format operation to this Dlist.

A CmpLst bit of zero indicates that the defect list sent by the initiator is an addition to the existing list of defects. As a result a new Glist is constructed that contains the existing Glist, the Dlist (if it is sent by the initiator), and the Clist (if certification is enabled). The target may add any defects it detects during the format operation to this Dlist.

Table 112 defines the implementation requirements for the FORMAT UNIT command.

Table 112 - FORMAT UNIT defect descriptor format and requirements

FmtData	CmpLst	Defect list format	Defect list length	Type	Comments
0	0	000b	N/A	M	Vendor-specific
BLOCK FORMAT					
1	0	000b	Zero	M	See notes (1) and (3)
1	1	000b	Zero	M	See notes (1) and (4)
1	0	000b	>0	O	See notes (2) and (3)
1	1	000b	>0	O	See notes (2) and (4)
BYTES FROM INDEX FORMAT					
1	0	100b	Zero	O	See notes (1) and (3)
1	1	100b	Zero	O	See notes (1) and (4)
1	0	100b	>0	O	See notes (2) and (3)
1	1	100b	>0	O	See notes (2) and (4)
PHYSICAL SECTOR FORMAT					
1	0	101b	Zero	O	See notes (1) and (3)
1	1	101b	Zero	O	See notes (1) and (4)
1	0	101b	>0	O	See notes (2) and (3)
1	1	101b	>0	O	See notes (2) and (4)
VENDOR-SPECIFIC FORMAT					
1	0	110b			
1	1	110b			
All remaining codes are reserved.					
Key: M = Command implementation is mandatory. O = Command implementation is optional.					
NOTES 1 No Dlist is transferred to the target during the DATA OUT phase. 2 A Dlist is transferred to the target during the DATA OUT phase. Add the Dlist defects to the new Glist. 3 Use the existing Glist as a defect source. Add existing Glist defects to the new Glist. 4 Discard the existing Glist. Do not add existing Glist defects to the new Glist. 5 All the options described in this table cause a new Glist to be created during execution of the FORMAT UNIT command as described in the text.					

The defect list format field specifies which defect descriptor is used if the FmtData bit is one (see table 112).

Copyright International Organization for Standardization
Provided by IHS under license with ISO
No reproduction or networking permitted without license from IHS Not for Resale

A format options valid (FOV) bit of zero indicates that the target shall use its default settings for the DPRY, DCRT, STPF, IP and DSP bits (see below). The initiator shall set these bits to zero. If any of these bits are not zero, the target shall terminate the command with CHECK CONDITION status. The sense key shall be set to ILLEGAL REQUEST and the additional sense code shall be set to INVALID FIELD IN PARAMETER LIST.

A FOV bit of one indicates that the target shall examine the setting of the DPRY, DCRT, STPF, IP and DSP bits. When the FOV bit is one, the DPRY, DCRT, STPF, IP and DSP bits are defined as follows.

A disable primary (DPRY) bit of zero indicates that the target shall not use portions of the medium identified as defective in the primary defect Plist for initiator addressable logical blocks. If the target cannot locate the Plist or it cannot determine whether a Plist exists, it shall perform the action specified by the STPF bit. A DPRY bit of one indicates that the target shall not use the Plist to identify defective areas of the medium. The Plist is not deleted.

A disable certification (DCRT) bit of zero indicates that the target shall perform a vendor-specific medium certification operation to generate a Clist. A DCRT bit of one indicates that the target shall not perform any vendor-specific medium certification process or format verification operation while executing the FORMAT UNIT command.

The stop format (STPF) bit controls the behaviour of the target when one of the following events occurs:

a) The target has been requested to use the primary defect list (DPRY is set to zero), or the grown defect list (CmpLst is set to zero) and the target cannot locate the list nor determine whether the list exists.
b) The target has been requested to use the primary defect list (DPRY is set to zero) or the grown defect list (CmpLst is set to zero), and the target encounters an error while accessing the defect list.

A STPF bit of zero indicates that, if one or both of the above conditions occurs, the target shall continue to execute the FORMAT UNIT command. The target shall return CHECK CONDITION status at the completion of the FORMAT UNIT command. The sense key shall be set to RECOVERED ERROR and the additional sense code shall be set to either DEFECT LIST NOT FOUND if the first condition occurred, or DEFECT LIST ERROR if the second condition occurred.

A STPF bit of one indicates that, if one or both of the above conditions occurs, the target shall terminate the FORMAT UNIT command with CHECK CONDITION status. The sense key shall be set to MEDIUM ERROR and the additional sense code shall be set to either DEFECT LIST NOT FOUND if the first condition occurred, or DEFECT LIST ERROR if the second condition occurred.

NOTE 104 The use of the FmtData bit, the CmpLst bit, and the defect header allow the initiator to control the source of the defect lists used by the FORMAT UNIT command. Setting the defect list length to zero allows the initiator to control the use of Plist and Clist without having to specify a Dlist.

An initialization pattern (IP) bit of one indicates that an initialization pattern descriptor (see 9.2.1.2) is included in the FORMAT UNIT parameter list immediately following the defect list header. An IP bit of zero indicates that an initialization pattern descriptor is not included and that the target shall use its default initialization pattern.

A disable saving parameters (DSP) bit of one specifies that the target shall not save the MODE SELECT savable parameters to non-volatile memory during the format operation. A DSP bit of zero specifies that the target shall save all the MODE SELECT savable parameters for all initiators to non-volatile memory during the format operation. Pages that are not reported as savable are not affected by the DSP bit (i.e. if pages 03h & 04h are not returned with the PS bit set they may be saved even if DSP is cleared).

An immediate (Immed) bit of zero indicates that status shall be returned after the format operation has completed. An Immed bit value of one indicates that the target shall return status as soon as the command descriptor block has been validated, and the entire defect list has been transferred.

The bit designated VS is vendor-specific.

Copyright International Organization for Standardization
Provided by IHS under license with ISO
No reproduction or networking permitted without license from IHS Not for Resale

The defect list length field in the defect list header specifies the total length in bytes of the defect descriptors that follow and does not include the initialization pattern descriptor or initialization pattern, if any. The length of the defect descriptors varies with the format of the defect list. The three formats for the defect descriptor(s) field in the defect lists are shown in 9.2.1.1.

The interleave field specifies the interleave that is used when performing the format operation. This allows the logical blocks to be related in a way that facilitates matching the transfer rate between the initiator and the peripheral. An interleave of zero specifies that the target use its default interleave. An interleave of one specifies that consecutive logical blocks be placed in contiguous ascending order. All other values are vendor-specific.

9.2.1.1 Defect list formats

This clause describes the defect list formats used in the FORMAT UNIT, READ DEFECT DATA and translate page of the SEND DIAGNOSTIC and RECEIVE DIAGNOSTIC RESULTS commands.

NOTE 105 The selected reporting format accounts for variables that impact the information in the returned data. For example, the specific location of a defect, while constant in angular and radial location on the device, may change in reported location a format operation with different geometry parameters is performed. It is the responsibility of the initiator to use a defect list format appropriate for the intended operation with the current or future geometry parameters. If the target is able to detect that the selected defect list format would provide inconsistent results, the target may return CHECK CONDITION status.

Each block format defect descriptor (see table 113) specifies a four-byte defective block address that contains the defect.

Table 113 - Defect descriptor - Block format

Bit / Byte	7	6	5	4	3	2	1	0
0	(MSB)							
...	Defective block address							
3								(LSB)

The defect list length is equal to four times the number of defect descriptors.

The defect descriptors should be in ascending order. More than one physical or logical block may be affected by each defect descriptor. A target may return CHECK CONDITION if the defect descriptors are not in ascending order.

Each byte from index defect descriptor (see table 114) specifies the location of a defect that is no more than eight bytes long.

Table 114 - Defect descriptor - Bytes from index format

Bit / Byte	7	6	5	4	3	2	1	0
0	(MSB)							
...	Cylinder number of defect							
2								(LSB)
3	Head number of defect							
4	(MSB)							
...	Defect bytes from index							
7								(LSB)

The defect list length is equal to eight times the number of defect descriptors.

Copyright International Organization for Standardization
Provided by IHS under license with ISO
No reproduction or networking permitted without license from IHS Not for Resale

Each descriptor is comprised of the cylinder number of defect, the head number of defect, and the defect bytes from index to the defect. The defect descriptors shall be in ascending order. The cylinder number of defect is the most significant part of the address and the defect bytes from index is the least significant part of the address. More than one physical or logical block may be affected by each defect. If the defect bytes from index has a value of FFFFFFFFh, this indicates that the entire track shall be considered defective.

Each physical sector defect descriptor (see table 115) specifies the location of a defect that is the length of a sector.

Table 115 - Defect descriptor - Physical sector format

Bit / Byte	7	6	5	4	3	2	1	0
0	(MSB)							
1				Cylinder number of defect				
2								(LSB)
3				Head number of defect				
4	(MSB)							
5				Defective sector number				
6								
7								(LSB)

The defect list length is equal to eight times the number of defect descriptors.

Each descriptor is comprised of a cylinder number of defect, the head number of defect, and the defective sector number. The defect descriptors shall be in ascending order. The cylinder number of defect is the most significant part of the address and the defective sector number is the least significant part of the address. More than one block may be affected by each defect descriptor. A defective sector number of FFFFFFFFh indicates that the entire track shall be considered defective.

9.2.1.2 Initialization pattern option

The initialization pattern option specifies that the logical blocks contain the specified initialization pattern. The initialization pattern descriptor (see table 116) is sent to the target as part of the FORMAT UNIT parameter list.

Table 116 - Initialization pattern descriptor

Bit / Byte	7	6	5	4	3	2	1	0
0	IP modifier		Reserved					
1	Pattern type							
2	(MSB)							
3				Initialization pattern length				(LSB)
4								
n				Initialization pattern				

NOTE 106 The initialization pattern option is not intended for media analysis or certification. This option may only initialize the initiator accessible area of the media to the specified pattern and may not write to any initiator inaccessible areas of the disk.

The IP modifier field specifies the type and location of a header that modifies the initialization pattern (see table 117).

Copyright International Organization for Standardization
Provided by IHS under license with ISO
No reproduction or networking permitted without license from IHS Not for Resale

Table 117 - Initialization pattern modifier

IP modifier	Description
00b	No header. The target shall not modify the initialization pattern.
01b	The target shall overwrite the initialization pattern to write the logical block address in the first four bytes of the logical block. The logical block address shall be written with the most significant byte first.
10b	The target shall overwrite the initialization pattern to write the logical block address in the first four bytes of each physical block contained within the logical block. The lowest numbered logical block or part thereof that occurs within the physical block is used. The logical block address shall be written with the most significant byte first.
11b	Reserved.

The initialization pattern type field (see table 118) indicates the type of pattern the target shall use to initialize each logical block within the initiator accessible portion of the medium. All bytes within a logical block shall be written with the initialization pattern. The initialization pattern is modified by the IP modifier field as described in table 117.

Table 118 - Initialization pattern type

Initialization pattern type	Description
00h	Use default pattern. (note 1)
01h	Repeat the initialization pattern as required to fill the logical block. (note 2)
02h - 7Fh	Reserved
80h - FFh	Vendor-specific

Notes
1) If the initialization pattern length is not zero the target shall terminate the command with CHECK CONDITION status. The sense key shall be set to ILLEGAL REQUEST and the additional sense code to INVALID FIELD IN PARAMETER LIST.
2) If the initialization pattern length is zero the target shall terminate the command with CHECK CONDITION status. The sense key shall be set to ILLEGAL REQUEST and the additional sense code to INVALID FIELD IN PARAMETER LIST.

The initialization pattern length field indicates the number of bytes contained in the initialization pattern. If the length exceeds the current logical block size the target shall terminate the command with CHECK CONDITION status. The sense key shall be set to ILLEGAL REQUEST and the additional sense code shall be set to INVALID FIELD IN PARAMETER LIST. The pattern is modified by the IP modifier field.

Copyright International Organization for Standardization
Provided by IHS under license with ISO
No reproduction or networking permitted without license from IHS Not for Resale

9.2.2 LOCK UNLOCK CACHE command

The LOCK UNLOCK CACHE command (see table 119) requests that the target disallow or allow logical blocks within the specified range to be removed from the cache memory by the target's cache replacement algorithm. Locked logical blocks may be written to the medium when modified, but a copy of the modified logical block shall remain in the cache memory.

Table 119 - LOCK UNLOCK CACHE command

Bit / Byte	7	6	5	4	3	2	1	0
0	Operation code (36h)							
1	Logical unit number			Reserved			Lock	RelAdr
2	(MSB)							
3				Logical block address				
4								
5								(LSB)
6	Reserved							
7	(MSB)							
8				Number of blocks				(LSB)
9	Control							

A lock bit of one indicates that any logical block in the specified range that is currently present in the cache memory shall be locked into cache memory. Only logical blocks that are already present in the cache memory are actually locked. A lock bit of zero indicates that all logical blocks in the specified range that are currently locked into the cache memory shall be unlocked, but not necessarily removed.

A relative address (RelAdr) bit of one indicates that the logical block address field is a two's complement displacement. This negative or positive displacement shall be added to the logical block address last accessed on the logical unit to form the logical block address for this command. This feature is only available when linking commands. The feature requires that a previous command in the linked group have accessed a block of data on the logical unit.

A RelAdr bit of zero indicates that the logical block address field specifies the first logical block of the range of logical blocks to be operated on by this command.

The number of blocks specifies the total number of contiguous logical blocks within the range. A number of blocks field of zero indicates that all remaining logical blocks on the logical unit shall be within the range.

Multiple locks may be in effect from more than one initiator. Locks from different initiators may overlap. An unlock of an overlapped area does not release the lock of another initiator.

Copyright International Organization for Standardization
Provided by IHS under license with ISO
No reproduction or networking permitted without license from IHS Not for Resale

9.2.3 PRE-FETCH command

The PRE-FETCH command (see table 120) requests that the target transfer the specified logical blocks to the cache memory. No data shall be transferred to the initiator.

Table 120 - PRE-FETCH command

Bit / Byte	7	6	5	4	3	2	1	0
0	Operation code (34h)							
1	Logical unit number			Reserved			Immed	RelAdr
2	(MSB)							
3				Logical block address				
4								
5								(LSB)
6	Reserved							
7	(MSB)							
8				Transfer length				(LSB)
9	Control							

An immediate (Immed) bit of one indicates that status shall be returned as soon as the command descriptor block has been validated. An Immed bit of zero indicates that status shall be returned after the operation is complete.

See 9.2.2 for a definition of the RelAdr bit and the logical block address field.

The transfer length field specifies the number of contiguous logical blocks of data that shall be transferred to the target's cache memory. A transfer length of zero indicates that the contiguous logical blocks up to and including the last logical block of the logical unit shall be transferred to the target's cache memory. Any other value indicates the number of logical blocks that shall be transferred. The target may elect to not transfer logical blocks that already are contained in the cache memory.

If the Immed bit is zero and the specified logical blocks were successfully transferred to the cache memory, the target shall return CONDITION MET status. If the link bit (see 7.2.7) is one, the target shall return INTERMEDIATE-CONDITION MET status.

If Immed is one, and the unlocked cache memory has sufficient capacity to accept all of the specified logical blocks, the target shall return CONDITION MET status. If the link bit (see 7.2.7) is one, the target shall return INTERMEDIATE-CONDITION MET status.

If Immed is one, and the unlocked cache memory does not have sufficient capacity to accept all of the specified logical blocks, the target shall return GOOD status. The target shall transfer to cache memory as many logical blocks as will fit. If the link bit (see 7.2.7) is one, the target shall return INTERMEDIATE status.

--`,,```,,,,````-`-`,,`,,`,`,,`---

Copyright International Organization for Standardization
Provided by IHS under license with ISO
No reproduction or networking permitted without license from IHS Not for Resale

9.2.4 PREVENT ALLOW MEDIUM REMOVAL command

The PREVENT ALLOW MEDIUM REMOVAL command (see table 121) requests that the target enable or disable the removal of the medium in the logical unit. This mechanism is independent of device reservations and the target shall not allow medium removal if any initiator currently has medium removal prevented.

Table 121 - PREVENT ALLOW MEDIUM REMOVAL command

Bit / Byte	7	6	5	4	3	2	1	0
0	Operation code (1Eh)							
1	Logical unit number			Reserved				
2	Reserved							
3	Reserved							
4	Reserved							Prevent
5	Control							

The prevention of medium removal shall begin when any initiator issues a PREVENT ALLOW MEDIUM REMOVAL command with a prevent bit of one (medium removal prevented). The prevention of medium removal for the logical unit shall terminate:

a) after all initiators that have medium removal prevented issue PREVENT ALLOW MEDIUM REMOVAL commands with a prevent bit of zero, and the target has successfully performed a synchronize cache operation;
b) upon the receipt of a BUS DEVICE RESET message from any initiator; or
c) upon a hard RESET condition.

While a prevention of medium removal condition is in effect the target shall inhibit mechanisms that normally allow removal of the medium by an operator.

Copyright International Organization for Standardization
Provided by IHS under license with ISO
No reproduction or networking permitted without license from IHS Not for Resale

9.2.5 READ(06) command

The READ(06) command (see table 122) requests that the target transfer data to the initiator. The most recent data value written in the addressed logical block shall be returned.

Table 122 - READ(06) command

Bit / Byte	7	6	5	4	3	2	1	0
0	Operation code (08h)							
1	Logical unit number			(MSB)				
2	Logical block address							
3								(LSB)
4	Transfer length							
5	Control							

The cache control bits (see 9.2.6) are not provided for this command. Targets with cache memory may have values for the cache control bits that affect the READ(06) command; however, no default value is defined by this International Standard. If explicit control is required, the READ(10) command should be used.

The logical block address field specifies the logical block at which the read operation shall begin.

The transfer length field specifies the number of contiguous logical blocks of data to be transferred. A transfer length of zero indicates that 256 logical blocks shall be transferred. Any other value indicates the number of logical blocks that shall be transferred.

9.2.6 READ(10) command

The READ(10) command (see table 123) requests that the target transfer data to the initiator. The most recent data value written in the addressed logical block shall be returned.

Table 123 - READ(10) command

Bit / Byte	7	6	5	4	3	2	1	0
0	Operation code (28h)							
1	Logical unit number			DPO	FUA	Reserved		RelAdr
2	(MSB)							
3	Logical block address							
4								
5								(LSB)
6	Reserved							
7	(MSB)							
8	Transfer length							(LSB)
9	Control							

Copyright International Organization for Standardization
Provided by IHS under license with ISO
No reproduction or networking permitted without license from IHS Not for Resale

A disable page out (DPO) bit of one indicates that the target shall assign the logical blocks accessed by this command the lowest priority for being fetched into or retained by the cache. A DPO bit of one overrides any retention priority specified in the cache page (see 9.3.3.1). A DPO bit of zero indicates the priority shall be determined by the retention priority fields in the cache page. All other aspects of the algorithm implementing the cache memory replacement strategy are not defined by this International Standard.

NOTE 107 The DPO bit is used to control replacement of logical blocks in the cache memory when the host has information on the future usage of the logical blocks. If the DPO bit is set to one, the host knows the logical blocks accessed by the command are not likely to be accessed again in the near future and should not be put in the cache memory nor retained by the cache memory. If the DPO bit is zero, the host expects that logical blocks accessed by this command are likely to be accessed again in the near future.

A force unit access (FUA) bit of one indicates that the target shall access the media in performing the command prior to returning GOOD status. Read commands shall access the specified logical blocks from the media (i.e. the data is not directly retrieved from the cache). In the case where the cache contains a more recent version of a logical block than the media, the logical block shall first be written to the media. Write commands shall not return GOOD status until the logical blocks have actually been written on the media (i.e. the data is not write cached).

An FUA bit of zero indicates that the target may satisfy the command by accessing the cache memory. For read operations, any logical blocks that are contained in the cache memory may be transferred to the initiator directly from the cache memory. For write operations, logical blocks may be transferred directly to the cache memory. GOOD status may be returned to the initiator prior to writing the logical blocks to the medium. Any error that occurs after the GOOD status is returned is a deferred error, and information regarding the error is not reported until a subsequent command.

See 9.2.2 for a definition of the RelAdr bit and the logical block address field.

The transfer length field specifies the number of contiguous logical blocks of data that shall be transferred. A transfer length of zero indicates that no logical blocks shall be transferred. This condition shall not be considered an error. Any other value indicates the number of logical blocks that shall be transferred.

9.2.7 READ CAPACITY command

The READ CAPACITY command (see table 124) provides a means for the initiator to request information regarding the capacity of the logical unit.

Table 124 - READ CAPACITY command

Bit / Byte	7	6	5	4	3	2	1	0
0	Operation code (25h)							
1	Logical unit number			Reserved				RelAdr
2	(MSB)							
3								
4				Logical block address				
5								(LSB)
6	Reserved							
7	Reserved							
8	Reserved							PMI
9	Control							

Copyright International Organization for Standardization
Provided by IHS under license with ISO
No reproduction or networking permitted without license from IHS Not for Resale

See 9.2.2 for a definition of the RelAdr bit and the logical block address field.

The logical block address shall be zero if the PMI bit is zero. If the PMI bit is zero and the logical block address is not zero, the target shall return a CHECK CONDITION status, the sense key shall be set to ILLEGAL REQUEST and the additional sense code set to ILLEGAL FIELD IN CDB.

A partial medium indicator (PMI) bit of zero indicates that the returned logical block address and the block length in bytes are those of the last logical block on the logical unit.

A PMI bit of one indicates that the returned logical block address and block length in bytes are those of the logical block address after which a substantial delay in data transfer will be encountered. This returned logical block address shall be greater than or equal to the logical block address specified by the RelAdr and logical block address fields in the command descriptor block.

NOTE 108 This function is intended to assist storage management software in determining whether there is sufficient space on the current track, cylinder, etc., to contain a frequently accessed data structure, such as a file directory or file index, without incurring an access delay.

The READ CAPACITY data (see table 125) shall be sent during the DATA IN phase of the command.

Table 125 - READ CAPACITY data

Bit / Byte	7	6	5	4	3	2	1	0
0	(MSB)							
— —				Returned logical block address				
3								(LSB)
4	(MSB)							
— —				Block length in bytes				
7								(LSB)

Copyright International Organization for Standardization
Provided by IHS under license with ISO
No reproduction or networking permitted without license from IHS Not for Resale

9.2.8 READ DEFECT DATA command

The READ DEFECT DATA command (see table 126) requests that the target transfer the medium defect data to the initiator.

Table 126 - READ DEFECT DATA command

Bit / Byte	7	6	5	4	3	2	1	0
0	Operation code (37h)							
1	Logical unit number			Reserved				
2	Reserved			Plist	Glist	Defect list format		
3	Reserved							
4	Reserved							
5	Reserved							
6	Reserved							
7	(MSB) Allocation length							
8	(LSB)							
9	Control							

If the target is unable to access any medium defect data, it shall terminate the command with CHECK CONDITION status. The sense key shall be set to either MEDIUM ERROR, if a medium error occurred, or NO SENSE, if the list does not exist; and the additional sense code shall be set to DEFECT LIST NOT FOUND.

NOTE 109 Some targets may not be able to return medium defect data until after a FORMAT UNIT command has been completed successfully.

A primary defect list (Plist) bit of one request that the target return the primary list of defects. A Plist bit of zero requests that the target not return the primary list of defects.

A grown defect list (Glist) bit of one request that the target return the grown defect list. A Glist bit of zero requests that the target not return the grown defect list.

A Plist bit of one and a Glist bit of one requests that the target return the primary and the grown defect lists. The order in which the lists are returned is vendor-specific. Whether the lists are merged or not is vendor-specific.

A Plist bit of zero and a Glist bit of zero requests that the target return only the defect list header.

The defect list format field is used by the initiator to indicate the preferred format for the defect list. This field is intended for those targets capable of returning more than one format, as defined in the FORMAT UNIT command (see 9.2.1.1, defect list format). A target unable to return the requested format shall return the defect list in its default format (see the defect list format field in the defect list header below).

If the requested defect list format and the returned defect list format are not the same, the target shall transfer the defect data and then terminate the command with CHECK CONDITION status. The sense key shall be set to RECOVERED ERROR and the additional sense code shall be set to DEFECT LIST NOT FOUND.

The READ DEFECT DATA defect list (see table 127) contains a four-byte header, followed by zero or more defect descriptors.

Copyright International Organization for Standardization
Provided by IHS under license with ISO
No reproduction or networking permitted without license from IHS Not for Resale

Table 127 - READ DEFECT DATA defect list

Bit / Byte	7	6	5	4	3	2	1	0
0	Reserved							
1	Reserved			Plist	Glist	Defect list format		
2	(MSB) Defect list length							
3								(LSB)
	Defect descriptor(s) (if any)							
0	Defect descriptor 0 (See specific table for length.)							
n								
	. . .							
0	Defect descriptor x (See specific table for length.)							
n								

A Plist bit of one indicates that the data returned contains the primary defect list. A Plist bit of zero indicates that the data returned does not contain the primary defect list.

A Glist bit of one indicates that the data returned contains the grown defect list. A Glist bit of zero indicates that the data returned does not contain the grown defect list.

The defect list format field indicates the format of the defect descriptors returned by the target. This field is defined in the FORMAT UNIT command (see 9.2.1.1).

NOTE 110 The use of the block format is not recommended. There is no universal model that sensibly defines the meaning of the logical block address of a defect. In the usual case, a defect that has been reassigned no longer has a logical block address.

Defect descriptors returned in the block format are vendor-specific. Defect descriptors returned in the physical sector format may or may not include defects in areas not accessible to the initiator. Defect descriptors returned in bytes-from-index format shall comprise a complete list of defects. A complete list of defects may include defects in areas not within the capacity returned in the READ CAPACITY command.

The defect list length field specifies the length in bytes of the defect descriptors that follow. The defect list length is equal to four or eight times the number of defect descriptors, depending on the format of the returned descriptors (see 9.2.1.1).

If the allocation length is insufficient to transfer all of the defect descriptors, the defect list length shall not be adjusted to reflect the truncation. The target shall not create CHECK CONDITION status. The initiator is responsible for comparing the defect list length and the allocation length to ensure that a partial list was not received.

NOTE 111 The initiator may determine the length of the defect list by sending the READ DEFECT DATA command with an allocation length of four. The target will return the defect list header that contains the length of the defect list.

The defect descriptors may or may not be sent in ascending order. The initiator may determine the exact number of defects by dividing the defect list length by the length of a single defect descriptor for the returned format.

Copyright International Organization for Standardization
Provided by IHS under license with ISO
No reproduction or networking permitted without license from IHS Not for Resale

9.2.9 READ LONG command

The READ LONG command (see table 128) requests that the target transfer data to the initiator. The data passed during the READ LONG command is vendor-specific, but shall include the data bytes and the ECC bytes recorded on the medium. The most recent data written in the addressed logical block shall be returned.

Table 128 - READ LONG command

Bit / Byte	7	6	5	4	3	2	1	0
0	Operation code (3Eh)							
1	Logical unit number			Reserved			CORRCT	RelAdr
2	(MSB)							
3				Logical block address				
4								
5								(LSB)
6	Reserved							
7	(MSB)							
8				Byte transfer length				(LSB)
9	Control							

NOTE 112 Any other bytes that can be corrected by ECC should be included (e.g. data synchronization mark within the area covered by ECC). It is not important for the ECC bytes to be at the end of the data bytes; however, they should be in the same order as they are on the media.

A corrected (CORRCT) bit of zero causes a logical block to be read without any correction made by the target. A CORRCT bit of one causes the data to be corrected by ECC before being transferred to the initiator.

See 9.2.2 for a definition of the RelAdr bit and the logical block address field.

The byte transfer length field should specify exactly the number of bytes of data that are available for transfer. If a non-zero byte transfer length does not exactly match the available data length, the target shall terminate the command with CHECK CONDITION status, the sense key shall be set to ILLEGAL REQUEST and an additional sense code set to INVALID FIELD IN CDB. The valid and ILI bits shall be set to one and the information field shall be set to the difference (residue) of the requested length minus the actual length in bytes. Negative values shall be indicated by two's complement notation.

A byte transfer length of zero indicates that no bytes shall be transferred and shall not be considered an error.

Copyright International Organization for Standardization
Provided by IHS under license with ISO
No reproduction or networking permitted without license from IHS Not for Resale

9.2.10 REASSIGN BLOCKS command

The REASSIGN BLOCKS command (see table 129) requests the target to reassign the defective logical blocks to another area on the medium set aside for this purpose. The target should also record the location of the defective logical blocks to the grown defect list if such a list is supported. More than one physical or logical block may be relocated by each defect descriptor sent by the initiator. This command does not alter the contents or location of the Plist (see 9.2.1, FORMAT UNIT command).

Table 129 - REASSIGN BLOCKS command

Bit / Byte	7	6	5	4	3	2	1	0
0	Operation code (07h)							
1	Logical unit number			Reserved				
2	Reserved							
3	Reserved							
4	Reserved							
5	Control							

The initiator transfers a defect list that contains the logical block addresses to be reassigned. The target shall reassign the physical medium used for each logical block address in the list. The data contained in the logical blocks specified in the defect list may be altered, but the data in all other logical blocks on the medium shall be preserved.

NOTE 113 The effect of specifying a logical block to be reassigned that previously has been reassigned is to reassign the block again. Over the life of the medium, a logical block can be assigned to multiple physical addresses until no more spare locations remain on the medium.

The REASSIGN BLOCKS defect list (see table 130) contains a four-byte header followed by one or more defect descriptors. The length of each defect descriptor is four bytes.

Table 130 - REASSIGN BLOCKS defect list

Bit / Byte	7	6	5	4	3	2	1	0
0	Reserved							
1	Reserved							
2	(MSB) Defect list length							
3	(LSB)							
	Defect descriptor(s)							
0	(MSB) Defect logical block address							
3	(LSB)							
	. . .							
0	(MSB) Defect logical block address							
3	(LSB)							

Copyright International Organization for Standardization
Provided by IHS under license with ISO
No reproduction or networking permitted without license from IHS Not for Resale

The defect list length field specifies the total length in bytes of the defect descriptors that follow. The defect list length is equal to four times the number of defect descriptors and does not include the defect list header length.

The defect descriptor specifies a four-byte defect logical block address that contains the defect. The defect descriptors shall be in ascending order.

If the logical unit has insufficient capacity to reassign all of the logical blocks specified in the defect descriptors, the command shall terminate with CHECK CONDITION status, the sense key shall be set to HARDWARE ERROR and the additional sense code set to NO DEFECT SPARE LOCATION AVAILABLE.

If the logical unit is unable to successfully complete a REASSIGN BLOCKS command, the command shall terminate with CHECK CONDITION status with the appropriate sense information. The logical block address of the first defect descriptor not reassigned shall be returned in the command-specific information field of the sense data. If information about the first defect descriptor not reassigned is not available, or if all the defects have been reassigned, this field shall be set to FFFFFFFFh.

If the REASSIGN BLOCKS command failed due to an unexpected unrecoverable read error that would cause the loss of data in a block not specified in the defect list, the logical block address of the unrecoverable block shall be returned in the information field of the sense data and the valid bit shall be set to one.

NOTE 114 If the REASSIGN BLOCKS command returns CHECK CONDITION status and the sense data command-specific information field contains a valid logical block address, the initiator should remove all defect descriptors from the defect list prior to the one returned in the command-specific information field. If the sense key is MEDIUM ERROR and the valid bit is one (the information field contains the valid block address) the initiator should insert that new defective logical block address into the defect list and reissue the REASSIGN BLOCKS command with the new defect list. Otherwise, the initiator should perform any corrective action indicated by the sense data and then reissue the REASSIGN BLOCKS command with the new defect list.

9.2.11 RELEASE command

The RELEASE command (see table 131) is used to release a previously reserved logical unit, or, if the extent release option is implemented, to release previously reserved extents within a logical unit.

Table 131 - RELEASE command

Bit / Byte	7	6	5	4	3	2	1	0
0	Operation code (17h)							
1	Logical unit number			3rdPty	Third party device ID			Extent
2	Reservation identification							
3	Reserved							
4	Reserved							
5	Control							

The RESERVE and RELEASE commands provide the basic mechanism for contention resolution in multiple-initiator systems. A reservation may only be released by the initiator that made it. It is not an error for an initiator to attempt to release a reservation that is not currently valid, or is held by another initiator. In this case, the target shall return GOOD status without altering any other reservation.

NOTE 115 This note is not applicable to this International Standard.

Copyright International Organization for Standardization
Provided by IHS under license with ISO
No reproduction or networking permitted without license from IHS Not for Resale

9.2.11.1 Logical unit release

Implementation of logical unit release is mandatory. If the extent bit is zero, this command shall cause the target to terminate all non-third-party logical unit and extent reservations that are active from the initiator to the specified logical unit. The reservation ID field in the command descriptor block is ignored by the target.

9.2.11.2 Extent release

Implementation of extent release is optional. If the extent bit is one and the extent release option is not implemented, then the RELEASE command shall be terminated with CHECK CONDITION status and the sense key shall be set to ILLEGAL REQUEST. This option shall be implemented if the extent reservation option (see 9.2.12.2) is implemented.

If the extent bit is one and the extent release option is implemented, this command shall cause any reservation from the requesting initiator with a matching reservation identification to be terminated. Other reservations from the requesting initiator shall remain in effect.

9.2.11.3 Third-party release

Implementation of third-party release is mandatory. Third-party release allows an initiator to release a logical unit or extents within a logical unit that were previously reserved using third-party reservation (see 9.2.12.3). Third-party release shall be implemented and is intended for use in multiple-initiator systems that use the COPY command.

If the third-party (3rdPty) bit is zero, then a third-party release is not requested. If the 3rdPty bit is one then the target shall release the specified logical unit or extents, but only if the reservation was made using a third-party reservation by the initiator that is requesting the release for the same SCSI device as specified in the third-party device ID field.

If the 3rdPty bit is one the target shall not modify the mode parameters for commands received from the third-party device even if the target implements the transfer of mode parameters with a third-party RESERVE command.

NOTE 116 If a target implements independent storage of mode parameters for each initiator, a third-party RESERVE command copies the current mode parameters for the initiator that sent the RESERVE command to the current mode parameters for the initiator specified as the third-party device (usually a copy master device). A unit attention condition notifies the third-party of the changed mode parameters due to the reservation. A successful third-party RELEASE command does not return the third-party devices' current mode parameters back to their previous values. The third-party device can issue MODE SENSE and MODE SELECT commands to query and modify the mode parameters.

Copyright International Organization for Standardization
Provided by IHS under license with ISO
No reproduction or networking permitted without license from IHS Not for Resale

9.2.12 RESERVE command

The RESERVE command (see table 132) is used to reserve a logical unit or, if the extent reservation option is implemented, extents within a logical unit.

Table 132 - RESERVE command

Bit / Byte	7	6	5	4	3	2	1	0
0	Operation code (16h)							
1	Logical unit number			3rdPty	Third party device ID			Extent
2	Reservation identification							
3	(MSB) Extent list length							
4								(LSB)
5	Control							

The RESERVE and RELEASE commands provide the basic mechanism for contention resolution in multiple-initiator systems. The third-party reservation allows logical units or extents to be reserved for another specified SCSI device.

NOTE 117 This note is not applicable to this International Standard.

9.2.12.1 Logical unit reservation

Implementation of logical unit reservation is mandatory. If the extent bit is zero, this command shall request that the entire logical unit be reserved for the exclusive use of the initiator until the reservation is superseded by another valid RESERVE command from the initiator that made the reservation or until released by a RELEASE command from the same initiator that made the reservation, by a BUS DEVICE RESET message from any initiator, by a hard RESET condition, or by a power on cycle. A logical unit reservation shall not be granted if the logical unit or any extent is reserved by another initiator. It shall be permissible for an initiator to reserve a logical unit that is currently reserved by that initiator. If the extent bit is zero, the reservation identification and the extent list length shall be ignored.

If the logical unit, or any extent within the logical unit is reserved for another initiator, the target shall return RESERVATION CONFLICT status.

If, after honouring the reservation, any other initiator attempts to perform any command on the reserved logical unit other than an INQUIRY, REQUEST SENSE, PREVENT ALLOW MEDIUM REMOVAL (with a prevent bit of zero), or a RELEASE command, the command shall be rejected with RESERVATION CONFLICT status.

9.2.12.2 Extent reservation

Implementation of extent reservation is optional. The reservation identification field provides a means for an initiator to identify each extent reservation. This allows an initiator in a multiple tasking environment, to have multiple reservations outstanding. The reservation identification is used in the RELEASE command to specify which reservation is to be released. It is also used in superseding RESERVE commands to specify which reservation is to be superseded.

If the extent reservation option is implemented, then the extent release option (see 9.2.11.2) shall also be implemented. These options permit multiple extents within the logical unit to be reserved, each with a separate reservation type.

If the extent bit is one, and the extent reservation option is implemented, then the target shall process the reservation request as follows:

Copyright International Organization for Standardization
Provided by IHS under license with ISO
No reproduction or networking permitted without license from IHS Not for Resale

a) The extent list shall be checked for the number of extents in the reservation request. If the extent list length is zero, no current reservations shall be changed, no new reservations shall be created, and this condition shall not be treated as an error. If the extent list contains more extents than are supported on the logical unit, the command shall be terminated with CHECK CONDITION status and the sense key shall be set to ILLEGAL REQUEST. If the extent list contains more extents than are currently available on the logical unit, then the target shall return a RESERVATION CONFLICT status.
b) The extent list shall be checked for valid extent logical block addresses. If any logical block address is invalid for this logical unit, the command shall be terminated with CHECK CONDITION status and the sense key shall be set to ILLEGAL REQUEST. The extent list shall be checked for invalid extent overlaps (as defined by reservation type) with other extent descriptors in the extent list and if invalid overlaps are found, the command shall be terminated with CHECK CONDITION status and the sense key shall be set to ILLEGAL REQUEST.
c) If the requested reservation does not conflict with an existing reservation, the extents specified shall be reserved until superseded by another valid RESERVE command from the initiator that made the reservation or until released by a RELEASE command from the same initiator, by a BUS DEVICE RESET message from any initiator, or by a hard RESET condition. If either of the last two conditions occur, the next command from each initiator shall be terminated with CHECK CONDITION status and the sense key shall be set to UNIT ATTENTION.
d) If the reservation request conflicts with an existing reservation, then the target shall return a RESERVATION CONFLICT status.

If the extent bit is one, and the extent reservation option is not implemented, then the RESERVE command shall be rejected with CHECK CONDITION status and the sense key shall be set to ILLEGAL REQUEST.

The size of the extent list shall be defined by the extent list length field. The extent list shall consist of zero or more descriptors as shown in table 133. Each extent descriptor defines an extent beginning at the specified logical block address for the specified number of blocks. If the number of blocks is zero, the extent shall begin at the specified logical block address and continue through the last logical block address on the logical unit.

Table 133 - Data format of extent descriptors

Bit / Byte	7	6	5	4	3	2	1	0
0	Reserved					RelAdr	Reservation type	
1	(MSB)							
2	Number of blocks							
3								(LSB)
4	(MSB)							
5	Logical block address							
6								
7								(LSB)

The reservation type field shall define the type of reservation in effect for the extent. The types of reservation are defined in table 134.

Table 134 - Reservation types

Reservation type	Description
00b	Read shared
01b	Write exclusive
10b	Read exclusive
11b	Exclusive access

a) **Read exclusive.** While this reservation is active, no other initiator shall be permitted read operations to the indicated extent. This reservation shall not inhibit write operations from any initiator or conflict with a write

Copyright International Organization for Standardization
Provided by IHS under license with ISO
No reproduction or networking permitted without license from IHS Not for Resale

exclusive reservation; however, read exclusive, exclusive access, and read shared reservations that overlap this extent shall conflict with this reservation.

b) **Write exclusive.** While this reservation is active, no other initiator shall be permitted write operations to the indicated extent. This reservation shall not inhibit read operations from any initiator or conflict with a read exclusive reservation from any initiator. This reservation shall conflict with write exclusive, exclusive access, and read shared reservations that overlap this extent.

c) **Exclusive access.** While this reservation is active, no other initiator shall be permitted any access to the indicated extent. All reservation types that overlap this extent shall conflict with this reservation.

d) **Read shared.** While this reservation is active, no write operations shall be permitted by any initiator to the indicated extent. This reservation shall not inhibit read operations from any initiator or conflict with a read shared reservation. Read exclusive, write exclusive, and exclusive access reservations that overlap with this extent shall conflict with this reservation.

If the relative address bit is one, the logical block address in the extent descriptor shall be treated as a two's complement displacement. This displacement shall be added to the logical block address last accessed on the logical unit to form the logical block address for this extent. This feature is only available when linking commands and requires that a previous command in the linked group has accessed a logical block on the logical unit; if not, the RESERVE command shall be terminated with CHECK CONDITION status and the sense key shall be set to ILLEGAL REQUEST.

If an initiator attempts a command to a logical block that has been reserved and that access is prohibited by the reservation, the command shall not be performed and the command shall be terminated with a RESERVATION CONFLICT status. If a reservation conflict precludes any part of the command, none of the command shall be performed. COPY commands shall be terminated with CHECK CONDITION status and the sense key shall be set to DATA PROTECT if any part of the copy operation is prohibited by an active reservation. If any extent in a logical unit is reserved in any way, by any initiator, a FORMAT UNIT command shall be rejected with a RESERVATION CONFLICT status.

9.2.12.3 Third-party reservation

Implementation of third-party reservation is mandatory. The third-party reservation for the RESERVE command allows an initiator to reserve a logical unit or extents within a logical unit for another SCSI device. This is intended for use in multiple-initiator systems that use the COPY command. Third-party reservation is required.

If the third-party (3rdPty) bit is zero, then a third-party reservation is not requested. If the 3rdPty bit is one then the target shall reserve the specified logical unit or extents for the SCSI device specified in the third-party device ID field. The target shall preserve the reservation until it is superseded by another valid RESERVE command from the initiator that made the reservation or until it is released by the same initiator, by a BUS DEVICE reset message from any initiator, or a hard reset condition. The target shall ignore any attempt to release the reservation made by any other initiator.

If independent sets of parameters are implemented, a third party reservation shall cause the target to transfer the set of parameters in effect for the initiator of the RESERVE command to the parameters used for commands from the third party device. Any subsequent command issued by the third-party device is executed according to the mode parameters in effect for the initiator that sent the RESERVE command.

NOTE 118 This transfer of the mode parameters is applicable to target devices which store mode information independently for different initiators. This mechanism allows an initiator to set the mode parameters of a target for the use of a copy master (i.e. the third-party device). The third-party copy master may subsequently issue a MODE SELECT command to modify the mode parameters.

Copyright International Organization for Standardization
Provided by IHS under license with ISO
No reproduction or networking permitted without license from IHS Not for Resale

9.2.12.4 Superseding reservations

Implementation of superseding reservations is mandatory. An initiator that holds a current reservation (unit or extent) may modify that reservation by issuing another RESERVE command (unit or extent) to the same logical unit. The superseding RESERVE command shall release the previous reservation state (unit or extent) when the new reservation request is granted. If the superseding reservation is for an extent reservation and the current reservation is also an extent reservation, the current extent reservation identification value is used for the superseding reservation. The current reservation shall not be modified if the superseding reservation request cannot be granted. If the superseding reservation cannot be granted because of conflicts with a previous reservation (other than the reservation being superseded), then the target shall return RESERVATION CONFLICT status.

NOTE 119 Superseding reservations allow the SCSI device ID to be changed on a reservation using the third-party reservation option. This capability is necessary for certain situations when using COMPARE, COPY, and COPY AND VERIFY commands.

9.2.13 REZERO UNIT command

The REZERO UNIT command (see table 135) requests that the target set the logical unit to a specific state. See vendor specifications for details.

Table 135 - REZERO UNIT command

Bit / Byte	7	6	5	4	3	2	1	0
0	Operation code (01h)							
1	Logical unit number			Reserved				
2	Reserved							
3	Reserved							
4	Reserved							
5	Control							

Copyright International Organization for Standardization
Provided by IHS under license with ISO
No reproduction or networking permitted without license from IHS Not for Resale

9.2.14 SEARCH DATA commands

The SEARCH DATA commands (see table 136) search one or more logical blocks for equality or inequality to a data pattern. The concept of records within a logical block is used to allow multiple records within a logical block to be searched.

Table 136 - SEARCH DATA commands

Bit / Byte	7	6	5	4	3	2	1	0
0	Operation code (31h 30h 32h)							
1	Logical unit number			Invert	Reserved		SpnDat	RelAdr
2	(MSB)							
3				Logical block address				
4								
5								(LSB)
6	Reserved							
7	(MSB)							
8	Number of blocks to search							(LSB)
9	Control							

The invert bit determines whether the search condition is to be inverted. See 9.2.14.1 through 9.2.14.3 for a description of the search conditions for the individual SEARCH DATA commands.

A spanned data (SpnDat) bit of zero indicates that each record shall be wholly contained within a single block. Any space at the end of a block that is smaller than the record length is ignored by the SEARCH DATA commands. A SpnDat bit of one indicates that records span block boundaries (i.e. record may start in one block and end in the next or a subsequent block).

The number of blocks to search field specifies the maximum number of contiguous logical blocks to be searched. A value of zero indicates that no logical blocks shall be searched. This condition shall not be considered an error. Any other value indicates the maximum number of logical blocks that shall be searched.

A link bit (see 7.2.7) of zero indicates a non-linked command and if the search is satisfied, the command shall be terminated with a CONDITION MET status. A REQUEST SENSE command can then be issued to determine the logical block address and record offset of the matching record. If the search is not satisfied and no error occurs, the command shall be terminated with GOOD status.

A link bit (see 7.2.7) of one indicates a command is linked to the SEARCH DATA command and if the search is satisfied, INTERMEDIATE-CONDITION MET status is returned and the next command is executed. If the RelAdr bit in the next command is one, the logical block address of the next command is used as a displacement from the logical block address at which the search was satisfied. If a linked search is not satisfied, the command is terminated with CHECK CONDITION status. A REQUEST SENSE command may then be issued.

A REQUEST SENSE command following a satisfied SEARCH DATA command shall:

a) return a sense key of EQUAL if the search was satisfied by an exact match. If the search was satisfied by an inequality then a sense key of NO SENSE shall be returned.
b) return the valid bit set to one.
c) return the logical block address of the logical block containing the first matching record in the information field.
d) return the record offset of the matching record in the command-specific information field.

Copyright International Organization for Standardization
Provided by IHS under license with ISO
No reproduction or networking permitted without license from IHS Not for Resale

A REQUEST SENSE command following a SEARCH DATA command that is not satisfied shall:

a) return a sense key of NO SENSE, if no errors occurred during the command execution.
b) return the valid bit set to zero.

The SEARCH DATA parameter list (see table 137) contains a fourteen-byte header, followed by one or more search argument descriptors.

Table 137 - SEARCH DATA parameter list

Bit / Byte	7	6	5	4	3	2	1	0
0	(MSB)							
3				Logical record length				(LSB)
4	(MSB)							
7				First record offset				(LSB)
8	(MSB)							
11				Number of records				(LSB)
12	(MSB)							
13				Search argument length				(LSB)
	Search argument descriptor(s)							
0	(MSB)							
3				Displacement				(LSB)
4	(MSB)							
5				Pattern length				(LSB)
6								
n				Pattern				

The logical record length field specifies the record length in bytes.

The first record offset field specifies the number of bytes that shall be ignored in the first logical block before the search begins. If the value of the first record offset field shall is larger than the logical block length the target shall terminate the command with a CHECK CONDITION status, set the sense key to ILLEGAL REQUEST and set the additional sense code to INVALID FIELD IN PARAMETERS LIST. Subsequent logical blocks shall be searched beginning with the first byte in the logical block. This permits one or more records to be skipped initially.

The number of records field specifies the maximum number of records that shall be searched by this command. An search shall terminate when the search pattern is found or when the number of records is exhausted or when the number of blocks to search is exhausted.

The search argument length field specifies the length in bytes of all the search argument descriptors that follow.

NOTE 120 Since the pattern length can vary, there is no fixed multiple of the search argument descriptor to determine the search argument length.

The search argument descriptors specify one or more search conditions to execute within a single record in order to satisfy the search. Each search argument descriptor is made up of a displacement field, a pattern length field, and a pattern field.

Copyright International Organization for Standardization
Provided by IHS under license with ISO
No reproduction or networking permitted without license from IHS Not for Resale

The displacement field specifies the displacement in bytes of the first byte of the data to be compared from the start of the logical record.

The pattern length field specifies the length in bytes of the pattern that follows.

The pattern field specifies the data to compare to the logical record.

9.2.14.1 SEARCH DATA EQUAL command

The SEARCH DATA EQUAL command (see table 136, operation code 31h) shall be satisfied by the first logical record searched that contains data that satisfies all of the search argument descriptor(s). If the invert bit in the command descriptor block is zero, the search argument descriptor(s) shall be satisfied by data in the logical record being equal to the data in the pattern. If the invert bit is one, the search argument descriptor(s) shall be satisfied by data in the logical record being not equal to the data in the pattern. (See 9.2.14.)

9.2.14.2 SEARCH DATA HIGH command

The SEARCH DATA HIGH command (see table 136, operation code 30h) shall be satisfied by the first logical record searched that contains data that satisfies all of the search argument descriptor(s). If the invert bit in the command descriptor block is zero, the search argument descriptor(s) shall be satisfied by data in the logical record being greater than the data in the pattern. If the invert bit is one, the search argument descriptor(s) shall be satisfied by data in the logical record being less than or equal to the data in the pattern. (See 9.2.14.)

9.2.14.3 SEARCH DATA LOW command

The SEARCH DATA LOW command (see table 136, operation code 32h) shall be satisfied by the first logical record searched that contains data that satisfies all of the search argument descriptor(s). If the invert bit in the command descriptor block is zero, the search argument descriptor(s) shall be satisfied by data in the logical record being less than the data in the pattern. If the invert bit is one, the search argument descriptor(s) shall be satisfied by data in the logical record being greater than or equal to the data in the pattern. (See 9.2.14.)

9.2.15 SEEK(06) and SEEK(10) commands

The SEEK(06) (see table 138) and SEEK(10) (see table 139) commands request that the logical unit seek to the specified logical block address.

Table 138 - SEEK(06) command

Bit / Byte	7	6	5	4	3	2	1	0
0	Operation code (0Bh)							
1	Logical unit number			(MSB)				
2	Logical block address							
3								(LSB)
4	Reserved							
5	Control							

Copyright International Organization for Standardization
Provided by IHS under license with ISO
No reproduction or networking permitted without license from IHS Not for Resale

Table 139 - SEEK(10) command

Bit / Byte	7	6	5	4	3	2	1	0
0	Operation code (2Bh)							
1	Logical unit number			Reserved				
2	(MSB)							
3	Logical block address							
4								
5								(LSB)
6	Reserved							
7	Reserved							
8	Reserved							
9	Control							

9.2.16 SET LIMITS command

The SET LIMITS command (see table 140) defines the range within which subsequent linked commands may operate. A second SET LIMITS command may not be linked to a chain of commands in which a SET LIMITS command has already been issued.

Table 140 - SET LIMITS command

Bit / Byte	7	6	5	4	3	2	1	0
0	Operation code (33h)							
1	Logical unit number			Reserved			RdInh	WrInh
2	(MSB)							
3	Logical block address							
4								
5								(LSB)
6	Reserved							
7	(MSB)							
8	Number of blocks							(LSB)
9	Control							

The read inhibit (RdInh) bit of one indicates that read operations within the range shall be inhibited.

A write inhibit (WrInh) bit of one indicates that write operations within the range shall be inhibited.

The logical block address field specifies the starting address for the range.

The number of blocks field specifies the number of logical blocks within the range. A number of blocks of zero indicates that the range shall extend to the last logical block on the logical unit.

Copyright International Organization for Standardization
Provided by IHS under license with ISO
No reproduction or networking permitted without license from IHS Not for Resale

Any attempt to access outside of the restricted range or any attempt to perform an inhibited operation within the restricted range shall not be performed. The command shall be terminated with CHECK CONDITION status and the sense key shall be set to DATA PROTECT. A second SET LIMITS command within a linked list of commands shall be rejected with CHECK CONDITION status and the sense key shall be set to DATA PROTECT.

9.2.17 START STOP UNIT command

The START STOP UNIT command (see table 141) requests that the target enable or disable the logical unit for media access operations.

Table 141 - START STOP UNIT command

Bit / Byte	7	6	5	4	3	2	1	0
0	Operation code (1Bh)							
1	Logical unit number			Reserved				Immed
2	Reserved							
3	Reserved							
4	Reserved						LoEj	Start
5	Control							

An immediate (Immed) bit of one indicates that status shall be returned as soon as the command descriptor block has been validated. An Immed bit of zero indicates that status shall be returned after the operation is completed.

A load eject (LoEj) bit of zero requests that no action be taken regarding loading or ejecting the medium. A LoEj bit of one requests that the medium shall be unloaded if the start bit is zero. A LoEj bit of one requests that the medium is to be loaded if the start bit is one.

A start bit of one requests the logical unit be made ready for use. A start bit of zero requests that the logical unit be stopped (media cannot be accessed by the initiator).

Targets that contain cache memory shall implicitly perform a SYNCHRONIZE CACHE command for the entire medium prior to executing the STOP UNIT command.

Copyright International Organization for Standardization
Provided by IHS under license with ISO
No reproduction or networking permitted without license from IHS
Not for Resale

9.2.18 SYNCHRONIZE CACHE command

The SYNCHRONIZE CACHE command (see table 142) ensures that logical blocks in the cache memory, within the specified range, have their most recent data value recorded on the physical medium. If a more recent data value for a logical block within the specified range exists in the cache memory than on the physical medium, then the logical block from the cache memory shall be written to the physical medium. Logical blocks are not necessarily removed from the cache memory as a result of the synchronize cache operation.

Table 142 - SYNCHRONIZE CACHE command

Bit / Byte	7	6	5	4	3	2	1	0
0	Operation code (35h)							
1	Logical unit number			Reserved			Immed	RelAdr
2	(MSB)							
3				Logical block address				
4								
5								(LSB)
6	Reserved							
7	(MSB)							
8				Number of blocks				(LSB)
9	Control							

An immediate (Immed) bit of one indicates that the target shall return status as soon as the command descriptor block has been validated. An Immed bit of zero indicates that the status shall not be returned until the operation has been completed. If the Immed bit is one and the target does not support it then the command shall terminate with CHECK CONDITION status. The sense key shall be set to ILLEGAL REQUEST and the additional sense code shall be set to INVALID FIELD IN CDB.

See 9.2.2 for a definition of the RelAdr bit and the logical block address field.

The number of blocks field specifies the total number of contiguous logical blocks within the range. A number of blocks of zero indicates that all remaining logical blocks on the logical unit shall be within the range.

A logical block within the specified range that is not in cache memory is not considered an error.

Copyright International Organization for Standardization
Provided by IHS under license with ISO
No reproduction or networking permitted without license from IHS Not for Resale

9.2.19 VERIFY command

The VERIFY command (see table 143) requests that the target verify the data written on the medium.

Table 143 - VERIFY command

Bit / Byte	7	6	5	4	3	2	1	0
0	Operation code (2Fh)							
1	Logical unit number			DPO	Reserved	Reserved	BytChk	RelAdr
2	(MSB)							
3				Logical block address				
4								
5								(LSB)
6	Reserved							
7	(MSB)							
8				Verification length				(LSB)
9	Control							

If the MODE SELECT command is implemented, and the verify error recovery parameters page is also implemented, then the current settings in that page specifies the verification error criteria. If the verify error recovery parameters page is not implemented, then the verification criteria is vendor-specific.

A byte check (BytChk) bit of zero causes a medium verification to be performed with no data comparison. A BytChk bit of one causes a byte-by-byte compare of data written on the medium and the data transferred from the initiator. If the compare is unsuccessful for any reason, the target shall return CHECK CONDITION status with the sense key set to MISCOMPARE.

See 9.2.2 for a definition of the RelAdr bit and the logical block address field.

The verification length field specifies the number of contiguous logical blocks of data that shall be verified. A transfer length of zero indicates that no logical blocks shall be verified. This condition shall not be considered as an error. Any other value indicates the number of logical blocks that shall be verified.

See 9.2.6 for a description of the cache control bit (DPO).

Copyright International Organization for Standardization
Provided by IHS under license with ISO
No reproduction or networking permitted without license from IHS Not for Resale

9.2.20 WRITE(06) command

The WRITE(06) command (see table 144) requests that the target write the data transferred by the initiator to the medium.

Table 144 - WRITE(06) command

Bit / Byte	7	6	5	4	3	2	1	0
0	Operation code (0Ah)							
1	Logical unit number			(MSB)				
2	Logical block address							
3								(LSB)
4	Transfer length							
5	Control							

The cache control bits (see 9.2.6) are not provided for this command. Targets with cache memory may have values for the cache control bits which may affect the WRITE(06) command, however no default value is defined by this International Standard. If explicit control is required, the WRITE(10) command should be used.

The logical block address field specifies the logical block at which the write operation shall begin.

The transfer length field specifies the number of contiguous logical blocks of data to transferred. A transfer length of zero indicates that 256 logical blocks shall be transferred. Any other value indicates the number of logical blocks that shall be transferred.

9.2.21 WRITE(10) command

The WRITE(10) command (see table 145) requests that the target write the data transferred by the initiator to the medium.

Table 145 - WRITE(10) command

Bit / Byte	7	6	5	4	3	2	1	0
0	Operation code (2Ah)							
1	Logical unit number			DPO	FUA	Reserved	Reserved	RelAdr
2	(MSB)							
3	Logical block address							
4								
5								(LSB)
6	Reserved							
7	(MSB)							
8	Transfer length							(LSB)
9	Control							

Copyright International Organization for Standardization
Provided by IHS under license with ISO
No reproduction or networking permitted without license from IHS Not for Resale

See READ(10) command (9.2.6) for a definition of the cache control bits (DPO and FUA).

See 9.2.2 for a definition of the RelAdr bit and the logical block address field.

The transfer length field specifies the number of contiguous logical blocks of data that shall be transferred. A transfer length of zero indicates that no logical blocks shall be transferred. This condition shall not be considered an error and no data shall be written. Any other value indicates the number of logical blocks that shall be transferred.

9.2.22 WRITE AND VERIFY command

The WRITE AND VERIFY command (see table 146) requests that the target write the data transferred from the initiator to the medium and then verify that the data is correctly written. The data is only transferred once from the initiator to the target.

Table 146 - WRITE AND VERIFY command

Bit / Byte	7	6	5	4	3	2	1	0
0	Operation code (2Eh)							
1	Logical unit number			DPO	Reserved	Reserved	BytChk	RelAdr
2	(MSB)							
3				Logical block address				
4								
5								(LSB)
6	Reserved							
7	(MSB)							
8				Transfer length				(LSB)
9	Control							

If the MODE SELECT command is implemented, and the verify error recovery page is also implemented (see 9.3.3.8), then the current settings in that page along with the AWRE bit from the read-write error recovery page specify the verification error criteria. If these pages are not implemented, then the verification criteria is vendor-specific.

A byte check (BytChk) bit of zero requests a medium verification to be performed with no data comparison. A BytChk bit of one requests a byte-by-byte compare of data written on the medium and the data transferred from the initiator. If the compare is unsuccessful for any reason, the target shall return CHECK CONDITION status with the sense key set to MISCOMPARE.

See 9.2.2 for a definition of the RelAdr bit and the logical block address field.

See WRITE(10) command (see 9.2.21) for a definition of the transfer length field.

See 9.2.6 for a description of the cache control bit (DPO).

NOTE 121 The WRITE AND VERIFY command specifically states that the data are not to be transferred twice (i.e. once for the write pass, and once for the verify pass) when performing a byte compare. If there is a need for two transfers to occur (e.g. to ensure the integrity of the path to the media), then the initiator should issue a WRITE command with a LINK bit of one followed by a VERIFY command with a BytCmp bit of one, transferring the same data on each command.

Copyright International Organization for Standardization
Provided by IHS under license with ISO
No reproduction or networking permitted without license from IHS Not for Resale

9.2.23 WRITE LONG command

The WRITE LONG command (see table 147) requests that the target write the data transferred by the initiator to the medium. The data passed during the WRITE LONG command is implementation specific, but shall include the data bytes and the ECC bytes.

Table 147 - WRITE LONG command

Bit / Byte	7	6	5	4	3	2	1	0
0	Operation code (3Fh)							
1	Logical unit number			Reserved				RelAdr
2	(MSB)							
3				Logical block address				
4								
5								(LSB)
6	Reserved							
7	(MSB)							
8				Byte transfer length				(LSB)
9	Control							

NOTE 122 Any other bytes that can be corrected by ECC should be included (e.g. a data synchronization mark within the area covered by ECC). The READ LONG command is usually issued before issuing a WRITE LONG command. The WRITE LONG data should be the same length and in the same order as the data returned by the READ LONG command.

See 9.2.2 for a definition of the RelAdr bit and the logical block address field.

The byte transfer length field should specify the number of bytes of data that the target would return for the READ LONG command. If a non-zero byte transfer length does not exactly match the data length the target would return for the READ LONG command, then the target shall terminate the command with CHECK CONDITION status and a sense key of ILLEGAL REQUEST and an additional sense code of INVALID FIELD IN CDB. The ILI and valid bits shall be set to one and the information field shall be set to the difference (residue) of the requested length minus the actual length in bytes. Negative values shall be indicated by two's complement notation. A transfer length of zero indicates that no bytes shall be transferred and shall not be considered an error.

Copyright International Organization for Standardization
Provided by IHS under license with ISO
No reproduction or networking permitted without license from IHS Not for Resale

9.2.24 WRITE SAME command

The WRITE SAME command (see table 148) requests that the target write the single block of data transferred by the initiator to the medium multiple times.

Table 148 - WRITE SAME command

Bit / Byte	7	6	5	4	3	2	1	0
0	Operation code (41h)							
1	Logical unit number			Reserved		PBdata	LBdata	RelAdr
2	(MSB)							
3				Logical block address				
4								
5								(LSB)
6	Reserved							
7	(MSB)							
8				Number of blocks				(LSB)
9	Control							

NOTE 123 This command is useful if large areas of the medium need to be written, prepared for certification, or otherwise initialized without the initiator having to transfer all the data.

A logical block data (LBdata) bit of one requests that the target replace the first four bytes of the data to be written to the current logical block with the logical block address of the block currently being written.

A physical block data (PBdata) bit of one requests that the target replace the first eight bytes of the data to be written to the current physical sector with the physical address of the sector currently being written using the physical sector format (see 9.2.1.1).

If PBdata and LBdata are one the command shall be terminated with CHECK CONDITION status. The sense key shall be set to ILLEGAL REQUEST.

See 9.2.2 for a definition of the RelAdr bit and the logical block address field.

The number of blocks field specifies the number of contiguous logical blocks to be written. A number of blocks field of zero requests that all the remaining logical blocks on the medium be written.

Copyright International Organization for Standardization
Provided by IHS under license with ISO
No reproduction or networking permitted without license from IHS Not for Resale

9.3 Parameters for direct-access devices

9.3.1 Diagnostic parameters

This subclause defines the descriptors and pages for diagnostic parameters used with direct-access devices.

The diagnostic page codes for direct-access devices are defined in table 149.

Table 149 - Diagnostic page codes

Page code	Description	Subclause
00h	Supported diagnostic pages	8.3.1.1
40h	Translate address page	9.3.1.1
01h - 3Fh	Reserved (for all device type pages)	
41h - 7Fh	Reserved	
80h - FFh	Vendor-specific pages	

9.3.1.1 Translate address page - SEND DIAGNOSTIC

The translate address page allows the initiator to translate a logical block address, physical sector address or physical bytes from index address into any one of the other formats. The address to be translated is passed to the target with the SEND DIAGNOSTIC command and the results are returned to the initiator by the RECEIVE DIAGNOSTIC RESULTS command. The format of the translate address page - SEND DIAGNOSTIC is shown in table 150. The translated address is returned in the translate address page - RECEIVE DIAGNOSTIC RESULTS (see 9.3.1.2).

Table 150 - Translate address page - SEND DIAGNOSTIC

Bit / Byte	7	6	5	4	3	2	1	0
0	Page code (40h)							
1	Reserved							
2	(MSB) Page length (000Ah)							
3								(LSB)
4	Reserved					Supplied format		
5	Reserved					Translate format		
6 - 13	Address to translate							

The supplied format field specifies the format of address to translate field. Valid values for this field are defined in the FORMAT UNIT command (see 9.2.1). If the target does not support the requested format it shall terminate the SEND DIAGNOSTIC command with CHECK CONDITION status. The sense key shall be set to ILLEGAL REQUEST and an additional sense code shall be set to INVALID FIELD IN PARAMETER LIST.

The translate format field specifies which format the initiator would like the address to be translated to. Valid values for this field are defined in the FORMAT UNIT command (see 9.2.1). If the target does not support the requested format it shall terminate the command with CHECK CONDITION status. The sense key shall be set to ILLEGAL REQUEST and an additional sense code shall be set to INVALID FIELD IN PARAMETER LIST.

Copyright International Organization for Standardization
Provided by IHS under license with ISO
No reproduction or networking permitted without license from IHS Not for Resale

The address to translate field contains a single address the initiator is requesting the target to translate. The format of this field depends on the value in the supplied format field. The formats are described in 9.2.1.1. If the logical block format is specified the block address shall be in the first four bytes of the field with the remaining bytes set to zero.

9.3.1.2 Translate address page - RECEIVE DIAGNOSTIC

The translate address page allows the initiator to translate a logical block address, physical sector address, or physical bytes from index address into any one of the other formats. The address to be translated is passed to the target with the SEND DIAGNOSTIC command and the results are returned to the initiator by the RECEIVE DIAGNOSTIC RESULTS command. The translated address is returned in the translate address page - RECEIVE DIAGNOSTIC (see table 151).

Table 151 - Translate address page - RECEIVE DIAGNOSTIC

Bit / Byte	7	6	5	4	3	2	1	0
0	Page code (40h)							
1	Reserved							
2	(MSB) Page length							
3								(LSB)
4	Reserved					Supplied format		
5	RAREA	ALTSEC	ALTTRK	Reserved		Translated format		
	Translated addresses							
6 — 13	Translated address 1							
	. . .							
n — n+7	Translated address x (if required)							

The translate address page contains a four byte page header which specifies the page code and length followed by two bytes which describe the translated address followed by zero or more translated address(s).

The page length field contains the number of parameter bytes which follow.

The supplied format field contains the value from the SEND DIAGNOSTIC command supplied format field (see 9.3.1.1).

A reserved area (RAREA) bit of one indicates that all or part of the translated address falls within a reserved area of the medium (e.g. speed tolerance gap, alternate sector, vendor reserved area, etc.). If the entire translated address falls within a reserved area the target may not return a translated address. An RAREA bit of zero indicates that no part of the translated address falls within a reserved area of the medium.

An alternate sector (ALTSEC) bit of one indicates that the translated address is physically located in an alternate sector of the medium. If the target cannot determine if all or part of the translated address is located in an alternate sector it shall set this bit to zero. An ALTSEC bit of zero indicates that no part of the translated address is located in an alternate sector of the medium or that the target is unable to determine this information.

Copyright International Organization for Standardization
Provided by IHS under license with ISO
No reproduction or networking permitted without license from IHS Not for Resale

An alternate track (ALTTRK) bit of one indicates that part or all of the translated address is located on an alternate track of the medium or the target cannot determine if all or part of the translated address is located on an alternate track. An ALTTRK bit of zero indicates that no part of the translated address is located on an alternate track of the medium.

The translated format field contains the value from the SEND DIAGNOSTIC command translate format field (see 9.3.1.1).

The translated address field contains the address(s) the target translated from the address supplied by the initiator in the SEND DIAGNOSTIC command. This field shall be in the format specified in the translate format field. The different formats are described in 9.2.1.1. If the logical block format is specified the block address shall be in the first four bytes of the field and the remaining bytes shall be set to zero.

If the returned data is in the logical block or physical sector format and the address to be translated covers more than one address after it has been translated (e.g. accounting for speed tolerance or multiple physical sectors within a single logical block or multiple logical blocks within a single physical sector) the target shall return all possible addresses which are contained in the area specified by the address to be translated.

If the returned data is in bytes from index format the target shall return a pair of translated values for each of the possible addresses which are contained in the area specified by the address to translate field. Of the pair of translated values returned, the first indicates the starting location and the second the ending location of the area.

9.3.2 Log parameters

This subclause defines the descriptors and pages for log parameters used with direct-access devices.

The log page codes for direct-access devices are defined in table 152.

Table 152 - Log page codes

Page code	Description	Subclause
01h	Buffer over-run/under-run page	8.3.2.1
03h	Error counter (read) page	8.3.2.2
05h	Error counter (verify) page	8.3.2.2
02h	Error counter (write) page	8.3.2.2
07h	Last n error events page	8.3.2.3
06h	Non-medium error page	8.3.2.4
00h	Supported log pages	8.3.2.5
04h	Reserved	
08h - 2Fh	Reserved	
3Fh	Reserved	
30h - 3Eh	Vendor-specific pages	

9.3.3 Mode parameters

This subclause defines the descriptors and pages for mode parameters used with direct-access devices.

The mode parameter list, including the mode parameter header and mode block descriptor are described in 8.3.3.

The medium-type code field is contained in the mode parameter header (see 8.3.3). Table 153 defines this field for direct-access devices.

Copyright International Organization for Standardization
Provided by IHS under license with ISO
No reproduction or networking permitted without license from IHS Not for Resale

Table 153 - Direct-access medium-type codes

Code value	Medium type				
00h	Default medium type (currently mounted medium type)				
01h	Flexible disk, single-sided; unspecified medium				
02h	Flexible disk, double-sided; unspecified medium				
	Flexible disks				
	Diameter mm (in)	Bit density Bits/radian	Track density /mm (/in)	Number of sides	Reference International Standard
05h	200 (8,0)	6 631	1,9 (48)	1	5654-1:1984
06h	200 (8,0)	6 631	1,9 (48)	2	
09h	200 (8,0)	13 262	1,9 (48)	1	
0Ah	200 (8,0)	13 262	1,9 (48)	2	7065-1:1985
0Dh	130 (5,25)	3 979	1,9 (48)	1	
12h	130 (5,25)	7 958	1,9 (48)	2	7487-1:1993
16h	130 (5,25)	7 958	3,8 (96)	2	8378-1:1986
1Ah	130 (5,25)	13 262	3,8 (96)	2	8630-1:1987
1Eh	90 (3,5)	7 958	5,3 (135)	2	8860-1:1987
	Direct-access magnetic yapes				
	Width mm (in)	Tracks	Density ftpmm (ftpi)		
40h	6,3 (0,25)	12	394 (10 000)		
44h	6,3 (0,25)	24	394 (10 000)		
Code values 80h - FFh are vendor-specific. All remaining code values are reserved.					

The device specific parameter field (see table 154) is contained in the mode parameter header (see 8.3.3).

Table 154 - Device specific parameter

Bit	7	6	5	4	3	2	1	0
	WP	Reserved		DPOFUA	Reserved			

When used with the MODE SELECT command the write protect (WP) bit is not defined.

When used with the MODE SENSE command a WP bit of zero indicates that the medium is write enabled. A WP bit of one indicates that the medium is write protected.

When used with the MODE SELECT command, the DPOFUA bit is not used and the field is reserved.

When used with the MODE SENSE command, a DPOFUA bit of one indicates that the target supports the DPO and FUA bits (see 9.2.6). When used with the MODE SENSE command, a DPOFUA bit of zero indicates that the target does not support the DPO and FUA bits.

The density code field is contained in the mode parameter block descriptor (see 8.3.3). This field is reserved for direct-access devices.

The mode page codes for direct-access devices are shown in table 155.

Copyright International Organization for Standardization
Provided by IHS under license with ISO
No reproduction or networking permitted without license from IHS
Not for Resale

Table 155 - Mode page codes

Page code	Description	Subclause
08h	Caching page	9.3.3.1
0Ah	Control mode page	8.3.3.1
02h	Disconnect-reconnect page	8.3.3.2
05h	Flexible disk page	9.3.3.2
03h	Format device page	9.3.3.3
0Bh	Medium types supported page	9.3.3.4
0Ch	Notch and partition page	9.3.3.5
09h	Peripheral device page	8.3.3.3
01h	Read-write error recovery page	9.3.3.6
04h	Rigid disk geometry page	9.3.3.7
07h	Verify error recovery page	9.3.3.8
06h	Reserved	
0Dh - 1Fh	Reserved	
00h	Vendor-specific (does not require page format)	
20h - 3Eh	Vendor-specific (page format required)	
3Fh	Return all pages (valid only for the MODE SENSE command)	

For direct-access devices, if the notch page is not supported, or if the active notch field in the notch page is zero then each page descriptor specifies mode parameters for the target to use for subsequent operations on the specified logical unit. If the notch page is supported, and the active notch is not zero, then each page descriptor specifies parameters for the target to use for subsequent operations on the disk notch specified by the current value of the active notch field on the specified logical unit.

9.3.3.1 Caching page

The caching parameters page (see table 156) defines the parameters that affect the use of the cache.

Table 156 - Caching page

Bit / Byte	7	6	5	4	3	2	1	0
0	PS	Reserved	Page code (08h)					
1	Page length (0Ah)							
2	Reserved					WCE	MF	RCD
3	Demand read retention priority				Write retention priority			
4	(MSB)							
5	Disable pre-fetch transfer length							(LSB)
6	(MSB)							
7	Minimum pre-fetch							(LSB)
8	(MSB)							
9	Maximum pre-fetch							(LSB)
10	(MSB)							
11	Maximum pre-fetch ceiling							(LSB)

The parameters savable (PS) bit is only used with the MODE SENSE command. This bit is reserved with the MODE SELECT command. A PS bit of one indicates that the target is capable of saving the page in a non-volatile vendor-

Copyright International Organization for Standardization
Provided by IHS under license with ISO
No reproduction or networking permitted without license from IHS Not for Resale

specific location. If the PS is set to one in MODE SENSE data then the page shall be savable by issuing a MODE SELECT command with SP set to one.

A write cache enable (WCE) bit of zero specifies that the target shall return GOOD status for a WRITE command after successfully writing all of the data to the medium. A WCE bit of one specifies that the target may return GOOD status for a WRITE command after successfully receiving the data and prior to having successfully written it to the medium.

A multiplication factor (MF) bit of zero specifies that the target shall interpret the minimum and maximum pre-fetch fields in terms of the number of logical blocks for each of the respective types of pre-fetch. An MF bit of one specifies that the target shall interpret the minimum and maximum pre-fetch fields to be specified in terms of a scaler number which, when multiplied by the number of logical blocks to be transferred for the current command, yields the number of logical blocks for each of the respective types of pre-fetch.

A read cache disable (RCD) bit of zero specifies that the target may return data requested by a READ command by accessing either the cache or media. A RCD bit of one specifies that the target shall transfer all of the data requested by a READ command from the medium (i.e. data cannot be transferred from the cache).

The demand read retention priority field (see table 157) advises the target on the retention priority to assign data read into the cache that has also been transferred from the target to the initiator.

Table 157 - Demand read and write retention priority

Value	Description
0h	Indicates the target should not distinguish between retaining the indicated data and data placed into the cache memory by other means (e.g. pre-fetch).
1h	Demand read retention priority: Data put into the cache via a READ command should be replaced sooner (has lower priority) than data placed into the cache by other means (e.g. pre-fetch). Write retention priority: Data put into the cache during a WRITE or WRITE AND VERIFY command should be replaced sooner (has lower priority) than data placed into the cache by other means (e.g. pre-fetch).
Fh	Demand read retention priority: Data put into the cache via a READ command should not be replaced if there is other data in the cache that was placed into the cache by other means (e.g. pre-fetch) and it may be replaced (i.e. it is not locked). Write retention priority: Data put into the cache during a WRITE or WRITE AND VERIFY command should not be replaced if there is other data in the cache that was placed into the cache by other means (e.g. pre-fetch) and it may be replaced (i.e. it is not locked).
2h - Eh	Reserved

The write retention priority field (see table 157) advises the target on the retention priority to assign data written into the cache that has also been transferred from the cache memory to the medium.

An anticipatory pre-fetch occurs when data is placed in the cache that has not been requested. This usually happens in conjunction with the reading of data that has been requested. All the following parameters give an indication to the target how it should manage the cache based on the last READ command. An anticipatory pre-fetch may occur based on other information. All the remaining caching parameters are only recommendations to the target and should not cause a CHECK CONDITION to occur if the target cannot satisfy the request.

Copyright International Organization for Standardization
Provided by IHS under license with ISO
No reproduction or networking permitted without license from IHS
Not for Resale

The disable pre-fetch transfer length field specifies the selective disabling of anticipatory pre-fetch on long transfer lengths. The value in this field is compared to the number of blocks requested by the current READ command. If the number of blocks is greater than the disable pre-fetch transfer length, then an anticipatory pre-fetch is not done for the command. Otherwise the target should attempt an anticipatory pre-fetch. If the pre-fetch disable transfer length is set to zero, then all anticipatory pre-fetching is disabled for any request for data, including those for zero logical blocks.

The minimum pre-fetch field indicates either a number of blocks or a scaler multiplier of the transfer length, depending upon the setting of the MF bit. In either case, the resulting number of blocks is the number to pre-fetch regardless of the delays it might cause in executing subsequent commands.

The pre-fetching operation begins at the logical block immediately after the last logical block of the previous READ command. Pre-fetching shall always halt before the end of the media. Errors that occur during the pre-fetching operation shall not be reported to the initiator unless that target cannot, as a result of the error, execute subsequent commands correctly. In this case the error may be reported either immediately as an error for the current READ command, or as a deferred error, at the discretion of the target and according to the rules for reporting deferred errors.

If pre-fetch has read more than the amount of data indicated by the minimum pre-fetch then pre-fetching should be terminated whenever another command is ready to execute. This consideration is ignored when the minimum pre-fetch is equal to the maximum pre-fetch.

The maximum pre-fetch field indicates either a number of blocks or a scaler multiplier of the transfer length, depending upon the setting of the MF bit. In either case, the resulting number of blocks is the number to pre-fetch if there are no delays in executing subsequent commands.

The maximum pre-fetch field contains the maximum amount of data to pre-fetch into the cache as a result of one READ command. It is used in conjunction with the disable pre-fetch transfer length and maximum pre-fetch ceiling parameters to trade off pre-fetching new data with displacing old data already stored in the cache.

The maximum pre-fetch ceiling field specifies an upper limit on the number of logical blocks computed as the maximum pre-fetch. If this number of blocks is greater than the maximum pre-fetch, then the number of logical blocks to pre-fetch shall be truncated to the value stored in the maximum pre-fetch ceiling field.

NOTE 124 If the MF bit is one the maximum pre-fetch ceiling field is useful in limiting the amount of data to be pre-fetched.

Copyright International Organization for Standardization
Provided by IHS under license with ISO
No reproduction or networking permitted without license from IHS Not for Resale

9.3.3.2 Flexible disk page

The flexible disk page (see table 158) contains parameters for control and reporting of flexible disk drive parameters.

Table 158 - Flexible disk page

Bit / Byte	7	6	5	4	3	2	1	0
0	PS	Reserved	Page code (05h)					
1	Page length in bytes (1Eh)							
2	(MSB) Transfer rate							
3								(LSB)
4	Number of heads							
5	Sectors per track							
6	(MSB) Data bytes per sector							
7								(LSB)
8	(MSB) Number of cylinders							
9								(LSB)
10	(MSB) Starting cylinder-write precompensation							
11								(LSB)
12	(MSB) Starting cylinder-reduced write current							
13								(LSB)
14	(MSB) Drive step rate							
15								(LSB)
16	Drive step pulse width							
17	(MSB) Head settle delay							
18								(LSB)
19	Motor on delay							
20	Motor off delay							
21	TRDY	SSN	MO	Reserved				
22	Reserved				SPC			
23	Write compensation							
24	Head load delay							
25	Head unload delay							
26	Pin 34				Pin 2			
27	Pin 4				Reserved			
28	Medium rotation rate							
29								(LSB)
30	Reserved							
31	Reserved							

The parameters savable (PS) bit is only used with the MODE SENSE command. This bit is reserved with the MODE SELECT command. A PS bit of one indicates that the target is capable of saving the page in a non-volatile vendor-specific location.

Copyright International Organization for Standardization
Provided by IHS under license with ISO
No reproduction or networking permitted without license from IHS Not for Resale

NOTE 125 This page is mainly intended for defining parameters of flexible disk drives, but may be used for other devices, if applicable.

The transfer rate indicates the data rate of the peripheral device. See table 159 for examples of common transfer rates.

Table 159 - Examples of transfer rates

Value	Transfer rate
00FAh	250 kbit/s transfer rate
012Ch	300 kbit/s transfer rate
01F4h	500 kbit/s tranfer rate
03E8h	1 mbit/s transfer rate
07D0h	2 mbit/s transfer rate
1388h	5 mbit/s transfer rate

The number of heads field specifies the number of heads used for reading and writing data on the medium. Heads used exclusively for servo information are excluded.

The sectors per track field specifies the number of sectors per revolution per head.

The data bytes per sector field specifies the number of bytes of data per sector that an initiator can read or write.

The number of cylinders field specifies the number of cylinders used for data storage.

The starting cylinder for write precompensation field specifies the cylinder at which write precompensation is to begin. Cylinders are numbered starting with zero. If the starting cylinder for write precompensation is equal to the value in the number of cylinders field, write precompensation shall be disabled by the target.

The starting cylinder for reduced write current field specifies cylinder at which write current is reduced. Cylinders are numbered starting with zero. If the starting cylinder for reduced write current is equal to the value in the number of cylinders field, reduced write current shall be disabled by the target.

The drive step rate field specifies the step rate in units of 100 μs. This value may be rounded as defined in 7.5.4. A value of zero requests the target to set its default value.

The drive step pulse width field specifies the width of the step pulse in microseconds. This value may be rounded as defined in 7.5.4. A value of zero requests the target to set its default value.

The head settle delay field specifies the head settle time in units of 100 μs. This value may be rounded as defined in 7.5.4. A value of zero requests the target to set its default value.

If a true ready signal is not available, the motor on delay field specifies in tenths of a second the time that the target shall wait before attempting to access the medium after the motor on signal is asserted. If a true ready signal is available, the motor on delay field specifies in tenths of a second the time that the target shall wait for drive ready status before aborting an attempt to access the medium. This value may be rounded as defined in 7.5.4.

The motor off delay field specifies in tenths of a second the time that the target shall wait before releasing the motor on signal after an idle condition exists. A value of FFh indicates that the motor on signal shall not be released. The START STOP UNIT command is not affected by this parameter. This value may be rounded as defined in 7.5.4.

A true ready (TRDY) bit of one specifies that a signal is provided that indicates the medium is ready to be accessed.

A start sector number (SSN) bit of one specifies that sectors are numbered starting with one. An SSN bit of zero specifies that sectors are numbered starting with zero.

Copyright International Organization for Standardization
Provided by IHS under license with ISO
No reproduction or networking permitted without license from IHS Not for Resale

A motor on (MO) bit of one specifies that pin 16 (motor on) shall remain released. This bit shall be set to one when using high capacity (192 tracks per inch) drives and their pre-formatted diskettes. An MO bit of zero indicates that pin 16 (motor on) shall be asserted.

The step pulse per cylinder (SPC) field is used to specify the number of additional step pulses required per cylinder. Non-zero values allow a drive to read a diskette formatted on a drive with a lower number of tracks per inch. For example, a value of one allows a 96 track-per-inch drive to access tracks on a diskette that was formatted for 48 tracks per inch.

The write compensation field is used to specify the amount of write compensation to be used starting at the cylinder specified in the starting cylinder for write precompensation field. The correlation of any values used in this field to actual write precompensation time values is vendor-specific. If a zero is specified in this field the target shall use its default write precompensation value. This value may be rounded as defined in 7.5.4.

The head load delay field specifies the head loading time in milliseconds. This value may be rounded as defined in 7.5.4. A value of zero requests the target to set its default value.

The head unload delay field specifies the head unloading time in milliseconds. This value may be rounded as defined in 7.5.4. A value of zero requests the target to set its default value.

The Pin 34 field defines the usage of pin 34 of the flexible disk drive interface. This use of this pin varies among vendors and drives. The settings allow the initiator to select how pin 34 shall be used by the interface. See table 160.

Table 160 - Pin 34 field

Bit 7 6 5 4	Description of pin 34 use
P 0 0 0	Open
P 0 0 1	Ready
P 0 1 0	Disk changed

NOTES
1 P is a polarity bit, where 0 is active low and 1 is active high.
2 All undefined values are reserved.

The pin 4 field defines the usage of pin 4 of the flexible disk drive interface. This use of this pin varies among drive vendors and drives. The settings allow the initiator to specify how pin 4 shall be used by the interface. See table 161.

Table 161 - Pin 4 field

Bit 7 6 5 4	Description of pin 4 use
P 0 0 0	Open
P 0 0 1	In use
P 0 1 0	Eject
P 0 0 0	Head load

NOTES
1 P is a polarity bit, where 0 is active low and 1 is active high.
2 All undefined values are reserved.

The pin 2 field defines the usage of pin 2 of the flexible disk drive interface. This use of this pin varies among vendors and drives. The settings allow the initiator to specify how pin 2 shall be used by the interface. See table 162.

Copyright International Organization for Standardization
Provided by IHS under license with ISO
No reproduction or networking permitted without license from IHS Not for Resale

Table 162 - Pin 2 field

Bit 7 6 5 4	Description of pin 2 use
P 0 0 0	Open
P 0 0 1	Disk change reset

NOTES
1 P is a polarity bit, where 0 is active low and 1 is active high.
2 All undefined values are reserved.

The medium rotation rate field specifies the speed at which the medium rotates. The unit of measure is rotations per minute (e.g. 2 400 rpm). This field cannot be changed by a MODE SELECT command.

9.3.3.3 Format device page

The format device page (see table 163) contains parameters which specify the medium format.

Copyright International Organization for Standardization
Provided by IHS under license with ISO
No reproduction or networking permitted without license from IHS Not for Resale

Table 163 - Format device page

Bit / Byte	7	6	5	4	3	2	1	0
0	PS	Reserved	Page code (03h)					
1	Page length (16h)							
2	(MSB) Tracks per zone							
3								(LSB)
4	(MSB) Alternate sectors per zone							
5								(LSB)
6	(MSB) Alternate tracks per zone							
7								(LSB)
8	(MSB) Alternate tracks per logical unit							
9								(LSB)
10	(MSB) Sectors per track							
11								(LSB)
12	(MSB) Data bytes per physical sector							
13								(LSB)
14	(MSB) Interleave							
15								(LSB)
16	(MSB) Track skew factor							
17								(LSB)
18	(MSB) Cylinder skew factor							
19								(LSB)
20	SSEC	HSEC	RMB	SURF	Reserved			
21 – 23	Reserved							

The parameters savable (PS) bit is only used with the MODE SENSE command. This bit is reserved with the MODE SELECT command. A PS bit of one indicates that the target is capable of saving the page in a non-volatile vendor-specific location.

NOTE 126 If the initiator changes any of the current physical parameters defined below, the target may not be able to access the media until a FORMAT UNIT command has been successfully completed.

If the defect handling format parameters (tracks per zone, alternate sectors per zone, alternate tracks per zone and alternate tracks per logical unit) requested by the initiator are not supported by the target the target may round these fields to acceptable values as described in 7.5.4.

The tracks per zone field specifies the number of tracks per zone to use in dividing the capacity of the device for the purpose of allocating alternate sectors. A value of zero means that one zone is defined for the entire device. The last zone on the device might not contain the same number of tracks as the previous zone(s).

Copyright International Organization for Standardization
Provided by IHS under license with ISO
No reproduction or networking permitted without license from IHS Not for Resale

The alternate sectors per zone field specifies the number of sectors per zone the target shall reserve for defect handling. The target shall de-allocate these sectors from the initiator addressable blocks during the FORMAT UNIT command. If the notch page is implemented and the ND bit of the notch page is one and the active notch field of the notch page is zero, then a value of zero indicates that no alternate sectors shall be reserved. Otherwise, a value of zero indicates that the number of alternate sectors is target specific.

The alternate tracks per zone field specifies the number of tracks per zone the target shall reserve for defect handling. The target shall de-allocate these tracks from the initiator addressable blocks during the FORMAT UNIT command. If the notch page is implemented and the ND bit of the notch page is one and the active notch field of the notch page is zero, then a value of zero indicates that no alternate tracks shall be reserved. Otherwise, a value of zero indicates that the number of alternate tracks is target specific.

The alternate tracks per logical unit field specifies the number of tracks per logical unit the target shall reserve for defect handling. The target shall de-allocate these tracks from the initiator addressable blocks during the FORMAT UNIT command. If the notch page is implemented and the ND bit of the notch page is one and the active notch field of the notch page is zero, then a value of zero indicates that no alternate tracks shall be reserved. Otherwise, a value of zero indicates that the number of alternate tracks is target specific.

The sectors per track field specifies the number of physical sectors included within each track. This number includes any alternate sectors the target may allocate. A value of zero during MODE SELECT indicates that the target shall define the number of sectors per track. For devices with a variable number of sectors per track, the value in MODE SELECT shall be zero and the value reported in MODE SENSE for the number of sectors per track is vendor-specific.

The data bytes per physical sector field specifies the number of data bytes per physical sector that the target shall use. This value may be different than the logical block size reported in the MODE SELECT data. The target shall return CHECK CONDITION status if it determines that the combination of this field and the sectors per track field exceed the capability of the medium. A value of zero indicates that the data bytes per physical sector is defined by the target.

For MODE SENSE the interleave field returns the same parameter passed in the FORMAT UNIT command, The target shall report this field as target defined in the corresponding MODE SENSE command. For MODE SELECT this field is ignored.

NOTE 127 It is recommended that this field be marked non-changeable and that initiators send the value returned in MODE SENSE. This allows migration to specifying interleave as a mode parameter instead of in the FORMAT UNIT command.

The track skew factor field specifies the number of physical sectors between the last logical block of one track and the first logical block on the next sequential track of the same cylinder.

The cylinder skew factor field specifies the number of physical sectors between the last logical block of one cylinder and the first logical block on the next sequential cylinder.

The SSEC bit set to one indicates that the target shall use soft sector formatting.

The HSEC bit set to one indicates that the target shall use hard sector formatting. The HSEC bit and the SSEC bit are mutually exclusive in MODE SELECT commands.

The combinations sector formatting supported that are reported in response to a request for default values are defined in table 164.

Copyright International Organization for Standardization
Provided by IHS under license with ISO
No reproduction or networking permitted without license from IHS Not for Resale

Table 164 - Reporting of default sector formatting support

SSEC	HSEC	Description
0	0	Target shall not return this combination
1	0	Target supports soft sector formatting only
0	1	Target supports hard sector formatting only
1	1	Target supports both soft and hard sector formatting

The combinations sector formatting supported that are reported in response to a request for changeable values are defined in table 165.

Table 165 - Reporting of changeable sector formatting support

SSEC	HSEC	Description
0	0	Sector formatting not changeable
1	0	Target shall not return this combination
0	1	Target shall not return this combination
1	1	Target supports both soft and hard sector formatting

The removable medium (RMB) bit set to one indicates that the logical unit supports removable media. A RMB bit set to zero indicates that the logical unit does not support removable media. The status of this bit shall be reflected in the INQUIRY command RMB bit.

The surface (SURF) bit set to zero indicates that the target shall allocate progressive addresses to all logical blocks within a cylinder prior to allocating addresses on the next cylinder. A SURF bit set to one indicates that the target shall allocate progressive addresses to all logical blocks on a surface prior to allocating sector addresses on the next surface.

NOTE 128 If the target supports savable parameters, all savable parameters for this initiator, including those in page codes 3, 4, and 5, are saved to non-volatile memory when the save parameters bit (SP) in the command descriptor block is set to one. The savable parameters may also be saved to non-volatile memory during a FORMAT UNIT command (see 9.2.1).

9.3.3.4 Medium types supported page

The medium types supported page (see table 166) contains a list of the medium types implemented by the target for logical units.

Table 166 - Medium types supported page

Bit / Byte	7	6	5	4	3	2	1	0
0	PS	Reserved	Page code (0Bh)					
1	Page length (06h)							
2	Reserved							
3	Reserved							
4	Medium type one supported							
5	Medium type two supported							
6	Medium type three supported							
7	Medium type four supported							

Copyright International Organization for Standardization
Provided by IHS under license with ISO
No reproduction or networking permitted without license from IHS Not for Resale

The parameters savable (PS) bit is only used with the MODE SENSE command. This bit is reserved with the MODE SELECT command. A PS bit of one indicates that the target is capable of saving the page in a non-volatile vendor-specific location.

The code values for each medium type supported by the target (up to four maximum), are reported in ascending order. If only the default medium type is supported zero is reported. If less than four medium types are supported the unused entries shall be returned as zero.

9.3.3.5 Notch and partition page

The notch page (see table 167) contains parameters for direct-access devices which implement a variable number of blocks per cylinder and support this page. Each clause of the logical unit with a different number of blocks per cylinder is referred to as a notch.

Table 167 - Notch page

Bit / Byte	7	6	5	4	3	2	1	0
0	PS	Reserved	Page code (0Ch)					
1	Page length (16h)							
2	ND	LPN	Reserved					
3	Reserved							
4	(MSB)	Maximum number of notches						
5								(LSB)
6	(MSB)	Active notch						
7								(LSB)
8	(MSB)	Starting boundary						
11								(LSB)
12	(MSB)	Ending boundary						
15								(LSB)
16	(MSB)	Pages notched						
23								(LSB)

The parameters savable (PS) bit is only used with the MODE SENSE command. This bit is reserved with the MODE SELECT command. A PS bit of one indicates that the target is capable of saving the page in a non-volatile vendor-specific location.

A notched drive (ND) bit of zero indicates that the device is not notched and that all other parameters in this page shall be returned as zero by the target. A ND bit of one indicates that the device is notched. For each supported active notch value this page defines the starting and ending boundaries of the notch.

A logical or physical notch (LPN) bit of zero indicates that the boundaries are based on the physical parameters of the logical unit. The cylinder is considered most significant, the head least significant. A LPN bit of one indicates that the notch boundaries are based on logical blocks of the logical unit.

The maximum number of notches field indicates the maximum number of notches supported by the logical unit. This field shall be reported as unchangeable.

Copyright International Organization for Standardization
Provided by IHS under license with ISO
No reproduction or networking permitted without license from IHS Not for Resale

The active notch field indicates the notch that this and subsequent MODE SELECT and MODE SENSE commands shall refer to, until the active notch is changed by a later MODE SELECT command. The value of the active notch shall be greater than or equal to 0 and less than or equal to the maximum number of notches. An active notch value of zero indicates that this and subsequent MODE SELECT and MODE SENSE commands refer to the parameters that apply across all notches.

The starting boundary field indicates the beginning of the active notch or, if the active notch is zero, the beginning boundary of the logical unit. If the LPN bit is one, then the four bytes represent a logical block address. If the LPN bit is zero, then the three most significant bytes shall represent the cylinder number and the least significant byte shall represent the head number. This field shall be reported as unchangeable. When used with the MODE SELECT command this field is ignored.

The ending boundary field indicates the ending of the active notch or, if the active notch is zero, the ending of the logical unit. If the LPN bit is one, then the four bytes represent logical block address. If the LPN bit is zero, then the three most significant bytes shall represent the cylinder number and the least significant byte shall represent the head number. This field shall be reported as unchangeable. When used with the MODE SELECT command this field is ignored.

Each notch shall span a set of consecutive logical blocks on the logical unit, the notches shall not overlap, and no logical block shall be excluded from a notch.

The pages notched field is a bit map of the mode page codes that indicates which pages contain parameters that may be different for different notches. The most significant bit of this field corresponds to page code 3Fh and the least significant bit corresponds to page code 00h. If a bit is one, then the corresponding mode page contains parameters that may be different for different notches. If a bit is zero, then the corresponding mode page contains parameters that are constant for all notches. This field shall be reported as unchangeable.

9.3.3.6 Read-write error recovery page

The read-write error recovery page (see table 168) specifies the error recovery parameters the target shall use during any command that performs a read or write operation to the medium (e.g. READ(06), READ(10), WRITE(06), WRITE(10), COPY, COMPARE, WRITE & VERIFY, etc.).

Table 168 - Read-write error recovery page

Bit / Byte	7	6	5	4	3	2	1	0
0	PS	Reserved	Page code (01h)					
1	Page length (0Ah)							
2	AWRE	ARRE	TB	RC	EER	PER	DTE	DCR
3	Read retry count							
4	Correction span							
5	Head offset count							
6	Data strobe offset count							
7	Reserved							
8	Write retry count							
9	Reserved							
10	(MSB) Recovery time limit							
11	(LSB)							

Copyright International Organization for Standardization
Provided by IHS under license with ISO
No reproduction or networking permitted without license from IHS Not for Resale

The parameters savable (PS) bit is only used with the MODE SENSE command. This bit is reserved with the MODE SELECT command. A PS bit of one indicates that the target is capable of saving the page in a non-volatile vendor-specific location.

An automatic write reallocation enabled (AWRE) bit of one indicates that the target shall enable automatic reallocation to be performed during write operations. The automatic reallocation shall be performed only if the target has the valid data (e.g. original data in the buffer or recovered from the medium). The valid data shall be placed in the reallocated block. Error reporting as required by the error recovery bits (EER, PER, DTE, and DCR) shall be performed only after completion of the reallocation. The reallocation operation shall report any failures that occur. See the REASSIGN BLOCKS command (9.2.10) for error procedures.

An AWRE bit of zero indicates that the target shall not perform automatic reallocation of defective data blocks during write operations.

An automatic read reallocation enabled (ARRE) bit of one indicates that the target shall enable automatic reallocation of defective data blocks during read operations. All error recovery actions required by the error recovery bits (TB, EER, PER, DTE, and DCR) shall be executed. The automatic reallocation shall then be performed only if the target successfully recovers the data. The recovered data shall be placed in the reallocated block. Error reporting as required by the error recovery bits shall be performed only after completion of the reallocation. The reallocation process shall present any failures that occur. See the REASSIGN BLOCKS command (9.2.10) for error procedures.

An ARRE bit of zero indicates that the target shall not perform automatic reallocation of defective data blocks during read operations.

A transfer block (TB) bit of one indicates that a data block that is not recovered within the recovery limits specified shall be transferred to the initiator before CHECK CONDITION status is returned. A TB bit of zero indicates that such a data block shall not be transferred to the initiator. The TB bit does not affect the action taken for recovered data.

A read continuous (RC) bit of one indicates the target shall transfer the entire requested length of data without adding delays to perform error recovery procedures. This implies that the target may send data that is erroneous or fabricated in order to maintain a continuous flow of data. The target shall assign priority to this bit over conflicting error control bits (EER, DCR, DTE, and PER) within this byte.

NOTE 129 Fabricated data may be data already in the buffer or any other target-specific data. This bit is typically used in image processing, audio, or video applications.

A RC bit of zero indicates that error recovery operations that cause delays are acceptable during the data transfer. Data shall not be fabricated.

The individual bit definitions for EER, PER, DTE and DCR are contained in table 169. The combinations of these bits are explained in table 170.

Copyright International Organization for Standardization
Provided by IHS under license with ISO
No reproduction or networking permitted without license from IHS Not for Resale

Table 169 - Error recovery bit definitions

EER	PER	DTE	DCR	Description
1	-	-	-	An enable early recovery (EER) bit of one indicates that the target shall use of the most expedient form of error recovery first. This bit only applies to data error recovery and it does not affect positioning retries and the message system error recovery procedures.
0	-	-	-	An EER bit of zero indicates that the target shall use an error recovery procedure that minimizes the risk of mis-detection or mis-correction.
-	1	-	-	A post error (PER) bit of one indicates that the target shall report recovered errors.
-	0	-	-	A PER bit of zero indicates that the target shall not report recovered errors. Error recovery procedures shall be performed within the limits established by the error recovery parameters.
-	-	1	-	A disable transfer on error (DTE) bit of one indicates that the target shall terminate the data phase upon detection of a recovered error.
-	-	0	-	A DTE bit of zero indicates that the target shall not terminate the data phase upon detection of a recovered error.
-	-	-	1	A disable correction (DCR) bit of one indicates that error correction codes shall not be used for data error recovery.
-	-	-	0	A DCR bit of zero allows the use of error correction codes for data error recovery.

NOTE 130 An EER bit of one may imply an increase in the probability of mis-detection or mis-correction. An EER bit of zero typically means that the specified retry limit is exhausted prior to using error correction codes.

Copyright International Organization for Standardization
Provided by IHS under license with ISO
No reproduction or networking permitted without license from IHS Not for Resale

Table 170 - Combined error recovery parameter descriptions

EER	PER	DTE	DCR	Description
0	0	0	0	The full number of retries (specified in the read, write or verify retry count field) and error correction are attempted to recover the data (EER and DCR set to 0). A CHECK CONDITION is not reported at the completion of the command for recovered errors (PER set to 0). The command terminates with CHECK CONDITION status before the transfer count is exhausted only if an unrecoverable error is detected. If an unrecoverable data error occurred, the data in the block with the unrecoverable error may or may not be transferred to the initiator depending on the setting of the transfer block (TB) bit (read operation only).
0	0	0	1	Error correction is disabled (DCR set to one) so only the full number of retries (specified in the read, write or verify retry count field) are attempted to recover the data (EER set to 0). A CHECK CONDITION is not reported at the completion of the command for recoverable errors (PER set to 0). The command terminates with CHECK CONDITION status before the transfer count is exhausted only if an unrecoverable error is detected. If an unrecoverable data error occurred, the data in the block with the unrecoverable error may or may not be transferred to the initiator depending on the setting of the transfer block (TB) bit (read operation only).
0	0	1	0	Invalid mode (PER must be set to one if DTE is set to one). 1)
0	0	1	1	Invalid mode (PER must be set to one if DTE is set to one). 1)
0	1	0	0	The full number of retries (specified in the read, write or verify retry count field) and error correction are attempted to recover the data (EER and DCR set to 0). The command terminates with CHECK CONDITION status before the transfer count is exhausted only if an unrecoverable error is detected. If an unrecoverable data error occurred, the data in the block with the unrecoverable error may or may not be transferred to the initiator depending on the setting of the transfer block (TB) bit (read operation only). A CHECK CONDITION with a sense key of RECOVERED ERROR is reported at the completion of the command for any recoverable error that occurs (PER set to 1). The information field in the sense data shall contain the logical block address of the last recovered error which occurred during the transfer.

Copyright International Organization for Standardization
Provided by IHS under license with ISO
No reproduction or networking permitted without license from IHS Not for Resale

Table 170 - (continued)

EER	PER	DTE	DCR	Description
0	1	0	1	Error correction is disabled (DCR set to one) so only the full number of retries (specified in the read, write or verify retry count field) are attempted to recover the data (EER set to 0). The command terminates with CHECK CONDITION status before the transfer count is exhausted only if an unrecoverable error is detected. If an unrecoverable data error occurred, the data in the block with the unrecoverable error may or may not be transferred to the initiator depending on the setting of the transfer block (TB) bit (read operation only). A CHECK CONDITION with a sense key of RECOVERED ERROR is reported at the completion of the command for any recoverable error that occurs (PER set to 1). The information field in the sense data shall contain the logical block address of the last recovered error which occurred during the transfer.
0	1	1	0	The full number of retries (specified in the read, write or verify retry count field) and error correction are attempted to recover the data (EER and DCR set to 0). The command terminates with CHECK CONDITION status before the transfer count is exhausted if any error (recoverable or unrecoverable) is detected (DTE set to 1). The information field in the sense data shall contain the logical block address of the block in error. If an unrecoverable data error occurs the data in the block with the error may or may not be transferred to the initiator depending on the setting of the transfer block (TB) bit (read operation only).
0	1	1	1	Error correction is disabled (DCR set to one) so only the full number of retries (specified in the read, write or verify retry count field) are attempted to recover the data (EER set to 0). The command terminates with CHECK CONDITION status before the transfer count is exhausted if any error (recoverable or unrecoverable) is detected (DTE set to 1). The information field in the sense data shall contain the logical block address of the block in error. If an unrecoverable data error occurs the data in the block with the error may or may not be transferred to the initiator depending on the setting of the transfer block (TB) bit (read operation only).
1	0	0	0	The fewest possible retries and error correction are attempted to recover the data (EER set to one and DCR set to 0). A CHECK CONDITION is not reported at the completion of the command for recoverable errors (PER set to 0). The command terminates with CHECK CONDITION status before the transfer count is exhausted only if an unrecoverable error is detected. If an unrecoverable data error occurred, the data in the block with the unrecoverable error may or may not be transferred to the initiator depending on the setting of the transfer block (TB) bit (read operation only).

Copyright International Organization for Standardization
Provided by IHS under license with ISO
No reproduction or networking permitted without license from IHS
Not for Resale

Table 170 - (concluded)

EER	PER	DTE	DCR	Description
1	0	0	1	Invalid mode (DCR must be set to zero if EER is set to one). 1)
1	0	1	0	Invalid mode (PER must be set to one if DTE is set to one). 1)
1	0	1	1	Invalid mode (PER must be set to one if DTE is set to one). 1)
1	1	0	0	The fewest possible retries and error correction are attempted to recover the data (EER set to one and DCR set to 0). The command terminates with CHECK CONDITION status before the transfer count is exhausted only if an unrecoverable error is detected. If an unrecoverable data error occurred, the data in the block with the unrecoverable error may or may not be transferred to the initiator depending on the setting of the transfer block (TB) bit (read operation only). A CHECK CONDITION with a sense key of RECOVERED ERROR is reported at the completion of the command for any recoverable error that occurs (PER set to 1). The information field in the sense data shall contain the logical block address of the last recovered error which occurred during the transfer.
1	1	0	1	Invalid mode (DCR must be set to zero if EER is set to one). 1)
1	1	1	0	The fewest possible retries and error correction are attempted to recover the data (EER set to one and DCR set to 0). The command terminates with CHECK CONDITION status before the transfer count is exhausted if any error (recoverable or unrecoverable) is detected (DTE set to 1). The information field in the sense data shall contain the logical block address of the block in error. If an unrecoverable data error occurs the data in the block with the error may or may not be transferred to the initiator depending on the setting of the transfer block (TB) bit (read operation only).
1	1	1	1	Invalid mode (DCR must be set to zero if EER is set to one). 1)

1) If an invalid mode for the error recovery combination is sent by the initiator the target shall return CHECK CONDITION status with the sense key set to ILLEGAL REQUEST and the additional sense code set to INVALID FIELD IN PARAMETER LIST.

The read and write retry count fields specify the number of times that the target shall attempt its recovery algorithm during read and write operations, respectively. If the retry count field and the recovery time limit field are both specified in a MODE SELECT command, the field that requires the least time for data error recovery actions shall have priority.

The correction span field specifies the size, in bits, of the largest data error burst for which data error correction may be attempted. A correction span of zero specifies that the target shall use its default value or that this field is not supported.

The head offset count field specifies in two's-complement notation an incremental offset position from the track center to which the heads shall be moved. The effect of this field on write operations is unspecified. A head offset count of zero indicates that no offset is specified. A positive value indicates moving in the direction of increasing logical block addresses. A negative value indicates moving in the direction of decreasing logical block addresses. Any value specified in this field does not preclude the target from using positive or negative head

Copyright International Organization for Standardization
Provided by IHS under license with ISO
No reproduction or networking permitted without license from IHS Not for Resale

offset during error recovery. However, after any error recovery is completed the target shall return the head offset to the value specified in this field.

NOTE 131 The degree of offset for each incremental value and the number of valid values are device specific. It is recommended that the number of valid values be equal for the positive and negative head offset counts.

The target shall return CHECK CONDITION status and shall set the sense key to ILLEGAL REQUEST if an unsupported head offset value is specified. The valid bit shall be set to one and the information field shall be set to the positive value of the maximum head offset count that is supported. The target shall set the valid bit to zero if it cannot determine the maximum head offset count supported.

NOTE 132 If the target does not support this field, it returns a zero value in the MODE SENSE command.)

The data strobe offset count field specifies in two's-complement notation an incremental position to which the recovered data strobe shall be adjusted from its nominal setting. The effect of this field on write operations is unspecified. A value of zero indicates that no data strobe offset is specified. A positive value indicates movement in a positive direction as defined by the target. A negative value indicates movement in the negative direction as defined by the target. Any value specified in this field does not preclude the target from using positive or negative data strobe offset during error recovery. However, after any error recovery is completed the target shall return the data strobe offset to the value specified in this field.

NOTE 133 The degree of offset for each incremental value and the number of valid values are device specific. It is recommended that the number of valid values be equal for the positive and negative data strobe offset counts.

The target shall return CHECK CONDITION status and shall set the sense key to ILLEGAL REQUEST if an unsupported data strobe offset count value is specified. The valid bit shall be set to one and the information field shall be set to the positive value of the maximum data strobe offset count that is supported. The target shall set the valid bit to zero if it cannot determine the maximum data strobe offset supported.

NOTE 134 If the target does not support the data strobe offset count field, it returns a zero value in the MODE SENSE command.

The recovery time limit field specifies in increments of one ms the maximum time duration that the target shall use for data error recovery procedures. The target may round this value as described in 7.5.4. The limits in this field specifies the maximum error recovery time allowed for any individual logical block. A recovery time limit of zero specifies that the target shall use its default value.

If both retry count and recovery time limit are specified, the field that specifies the recovery action of least duration shall have priority.

--`,,```,,,,````-`-`,,`,,`,`,,`---

Copyright International Organization for Standardization
Provided by IHS under license with ISO
No reproduction or networking permitted without license from IHS Not for Resale

9.3.3.7 Rigid disk drive geometry page

The rigid disk drive geometry page (see table 171) specifies parameters for direct-access devices employing a rigid disk drive.

Table 171 - Rigid disk drive geometry page

Bit / Byte	7	6	5	4	3	2	1	0
0	PS	Reserved			Page code (04h)			
1					Page length (16h)			
2	(MSB)							
4					Number of cylinders			(LSB)
5					Number of heads			
6	(MSB)							
8					Starting cylinder-write precompensation			(LSB)
9	(MSB)							
11					Starting cylinder-reduced write current			(LSB)
12	(MSB)							
13					Drive step rate			(LSB)
14	(MSB)							
16					Landing zone cylinder			(LSB)
17					Reserved			RPL
18					Rotational offset			
19					Reserved			
20	(MSB)							
21					Medium rotation rate			(LSB)
22					Reserved			
23					Reserved			

The parameters savable (PS) bit is only used with the MODE SENSE command. This bit is reserved with the MODE SELECT command. A PS bit of one indicates that the target is capable of saving the page in a non-volatile vendor-specific location.

NOTE 135 This page is intended to define drive geometry parameters of rigid disk drives. It may be used for other devices if applicable.

The number of cylinders field defines the number of physical cylinders used for data storage.

The number of heads field defines the physical number of heads used for data storage. Heads used exclusively for servo information are excluded.

The starting cylinder for write precompensation field is the physical cylinder at which write precompensation is to begin. The first cylinder is number zero. If the starting cylinder for write precompensation is equal to the value in the number of cylinders field, write precompensation shall be disabled by the target.

Copyright International Organization for Standardization
Provided by IHS under license with ISO
No reproduction or networking permitted without license from IHS Not for Resale

The starting cylinder for reduced write current field is the physical cylinder at which write current is reduced. The first cylinder is number zero. If the starting cylinder for reduced write current is equal to the value in the number of cylinders field, reduced write current shall be disabled by the target.

The drive step rate field indicates the step rate in 100 ns increments. The target shall use the drive step rate, greater than or equal to the drive step rate specified. If the target rounds this field it shall terminate the command as described in 7.5.4. A value of zero requests the target to set its default value.

The landing zone cylinder field indicates two's complement location where the target shall position the disk heads. A negative value indicates that the heads are positioned below cylinder zero by that number of cylinders. A positive value greater than the number of cylinders indicates that the heads are positioned beyond the cylinders used for data storage at the cylinder location specified. A zero indicates that the default should be used.

The rotational position locking (RPL) field is used for spindle synchronization as defined in table 172. See K of the ANSI X3.170A-1991 for further information on synchronized spindles.

Table 172 - Rotational position locking

RPL	Description
00b	Indicates that spindle synchronization is disabled or not supported
01b	The target operates as a synchronized-spindle slave
10b	The target operates as a synchronized-spindle master
11b	The target operates as a synchronized-spindle master control

NOTE 136 The signals and connectors used for rotational position locking are external to the SCSI bus and are not part of this International Standard.

If a target fails to achieve synchronization it shall create a unit attention condition to all initiators. The sense key shall be set to UNIT ATTENTION and the additional sense code set to RPL STATUS CHANGE.

If subsequent to achieving synchronization the target detects a change of synchronization:

a) and, if the logical unit is not presently executing an I/O process for the initiator, the target shall create a unit attention condition. The sense key shall be set to UNIT ATTENTION and the additional sense code set to RPL STATUS CHANGE.
b) and, if the logical unit is presently executing an I/O process and no other error occurs, then the target shall return CHECK CONDITION status. The sense key shall be set to RECOVERED ERROR if the target is able to complete the I/O process or HARDWARE ERROR if the target is unable to complete the I/O process. The additional sense code is set to RPL STATUS CHANGE.

The rotational offset indicates the amount of rotational skew that the target shall use when synchronized. The rotational skew is applied in the retarded direction (lagging the synchronized spindle master control). The value in the field is the numerator of a fractional multiplier that has 256 as its denominator (e.g. a value of 128 indicates a one-half revolution skew). A value of zero indicates that rotational offset shall not be used. This value may be rounded as defined in 7.5.4. The rotational offset is not used when a target is configured as synchronized-spindle master.

The medium rotation rate indicates the speed at which the medium rotates. The unit of measure is rotations per minute (e.g. 3 600 rpm).

9.3.3.8 Verify error recovery page

The verify error recovery page (see table 173) specifies the error recovery parameters the target shall use during the VERIFY command, the verify operation of the WRITE AND VERIFY command and the verify operation of the COPY AND VERIFY command.

Copyright International Organization for Standardization
Provided by IHS under license with ISO
No reproduction or networking permitted without license from IHS Not for Resale

Table 173 - Verify error recovery page

Bit / Byte	7	6	5	4	3	2	1	0
0	PS	Reserved	Page code (07h)					
1	Parameter length (0Ah)							
2	Reserved				EER	PER	DTE	DCR
3	Verify retry count							
4	Verify correction span							
5	Reserved							
6	Reserved							
7	Reserved							
8	Reserved							
9	Reserved							
10	(MSB) Verify recovery time limit							
11	(LSB)							

The parameters savable (PS) bit is only used with the MODE SENSE command. This bit is reserved with the MODE SELECT command. A PS bit of one indicates that the target is capable of saving the page in a non-volatile vendor-specific location.

The AWRE bit as defined in the read-write error recovery page (see 9.3.3.6) applies to the WRITE AND VERIFY command. The VERIFY and COMPARE commands shall not perform automatic reallocation. The COPY and COPY AND VERIFY commands might or might not perform automatic reallocation depending on the settings of the mode parameters.

The EER, PER, DTE and DCR bits are defined in 9.3.3.6. The combinations of these bits is defined in 9.3.3.6.

The verify retry count field specifies the number of times that the target shall attempt its recovery algorithm during a verify operation. If the verify retry count and the verify recovery time limit are both specified, the one that requires the least time for data error recovery actions shall have priority.

The verify correction span field specifies the size, in bits, of the largest burst data error for which data error correction may be attempted. If the target does not implement this field, a value of zero is returned in MODE SENSE data.

The verify recovery time limit field specifies in increments of one millisecond the maximum time duration that the target shall use error recovery procedures to recover data for an individual logical block. The target may round this value as described in 7.5.4. If the verify retry count and the verify recovery time limit are both specified, the one that requires the least time for data error recovery actions shall have priority.

NOTE 137 To disable all types of correction and retries the initiator should set the EER bit to zero, the PER, DTE and DCR bits to one and the number of retries and recovery time limit to zero.

Copyright International Organization for Standardization
Provided by IHS under license with ISO
No reproduction or networking permitted without license from IHS Not for Resale

9.4 Definitions specific to direct-access devices

9.4.1 cache memory: A temporary (and often volatile) data storage area outside the user-accessible area. A cache memory is usually faster to access than the medium and thus has the effect of increasing data throughput by reducing the number of accesses to the medium.

9.4.2 non-volatile medium: Physical storage medium that retains data written to it for a subsequent read operation through a power-on condition. An example of this is a disk device that stores data as magnetic fields that do not require device power to exist.

9.4.3 notch: A notch refers to all or part of the medium having a consistent set of geometry parameters. Notches are used to increase storage capacity by optimizing the number of sectors per track between the inner and outer tracks.

9.4.4 user-accessible: The area of the medium that can be read from or written to by READ and WRITE commands.

9.4.5 volatile medium: Medium that may not retain data written to it for a subsequent read operation through a power-on condition. An example of this is a silicon memory device that loses data written to it if device power is lost.

Copyright International Organization for Standardization
Provided by IHS under license with ISO
No reproduction or networking permitted without license from IHS Not for Resale

10 Sequential-access devices

10.1 Sequential-access device model

10.1.1 Physical elements

Sequential-access devices (called devices below) optimize their use in storing or retrieving user data in a sequential manner. Since access is sequential, position changes typically take a long time, when compared to direct-access devices.

Sequential-access devices are usually tape devices. The remainder of this description is from the point of view of a tape device; however, other implementations are not precluded.

The recording medium for tape devices consists of various widths and lengths of a flexible substrate coated with a semi-permanent magnetic material. The recording medium may be wound onto single reels or encapsulated into cartridges containing both a supply reel and a take-up reel. Several International Standards exist covering the construction of reels and cartridges for interchange as well as recording techniques for many of the format or density combinations.

A complete unit composed of the recording medium and its physical carrier (e.g. reel, cartridge, cassette) is called a volume. Volumes have an attribute of being mounted or de-mounted on a suitable transport mechanism.

Mounted is the state of a volume when the device is physically capable of executing commands that cause the medium to be moved. A volume is de-mounted when it is being loaded, threaded, unloaded, unthreaded, or when not attached to the device.

Ready is the state of the device when medium access and non-medium access commands can be executed. The device is not ready when no volume is mounted or, from the initiator's perspective, whenever all medium access commands report CHECK CONDITION status and a NOT READY sense key. Some devices may have a separate switch function which places the device in a not ready state even when a volume is mounted.

The write enabled or write protected state determines when an initiator may write information on a volume. This attribute is usually controlled by the user of the volume through manual intervention (e.g. thumbwheel switch).

The recording medium has two physical attributes called beginning-of-medium (BOM) and end-of-medium (EOM). Beginning-of-medium is at the end of the medium that is attached to the take-up reel. End-of-medium is at the end of the medium that is attached to the supply reel. In some cases, the medium is permanently affixed to one or both of the reel hubs.

As shown in figure 18, the entire physical length of medium is not usable for recording data. For most volumes, a length of the medium is reserved before the beginning-of-medium and after the end-of-medium position. This is done to provide sufficient tape wraps onto the reel hub(s) and to ensure that recording starts in an undamaged section of the medium.

Copyright International Organization for Standardization
Provided by IHS under license with ISO
No reproduction or networking permitted without license from IHS Not for Resale

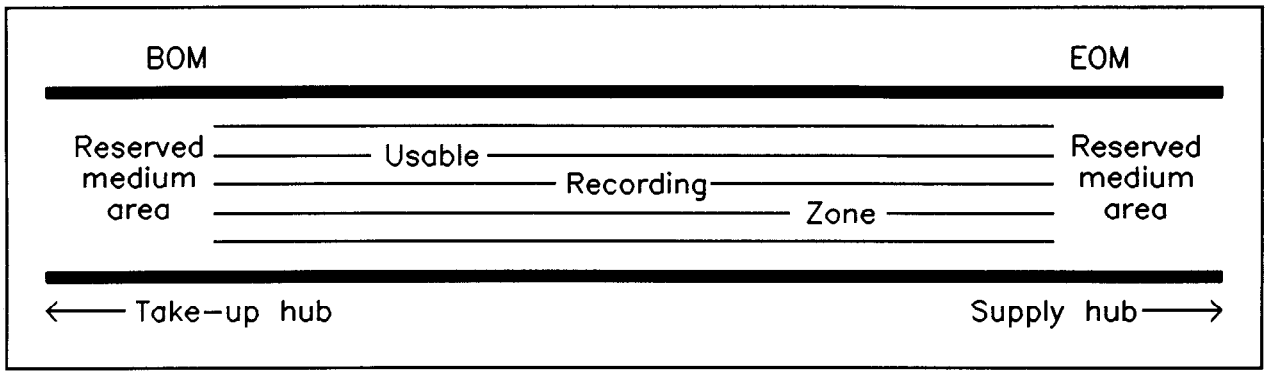

Figure 18 - Typical volume layout

10.1.2 Data storage characteristics

The position on the medium where a pattern of recorded signal may be written by one write component is called a track (see figure 19). A device may write or read from one or more tracks at a time, depending on the format.

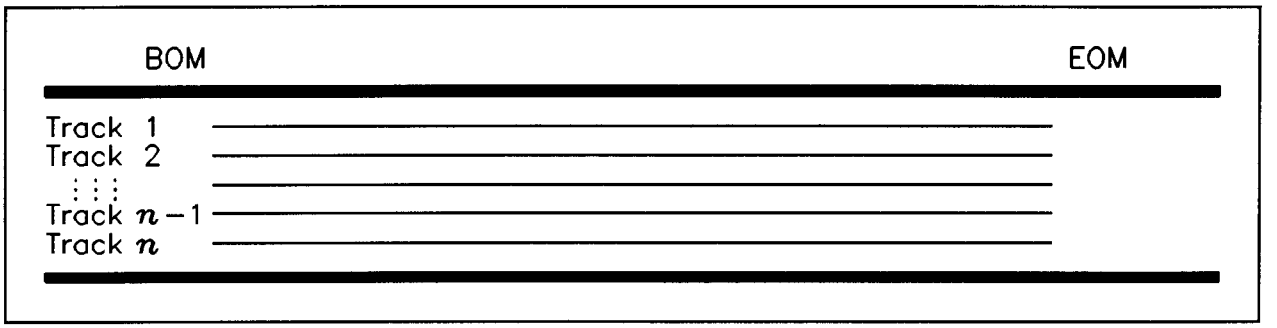

Figure 19 - Typical medium track layout

On a new volume, recording of one or more tracks begins after mounting the volume and moving from beginning-of-medium toward end-of-medium. The number of tracks written at one time is called a track group (TrkGrp). For recorded volumes, reading in the forward direction follows the same course of tracks as when writing.

If not all tracks are recorded at the same time, and the device reverses direction when approaching end-of-medium and begins writing on remaining tracks, the recording method is called serpentine. For serpentine devices that record only one track at a time, each physical track represents one track group (see figure 20).

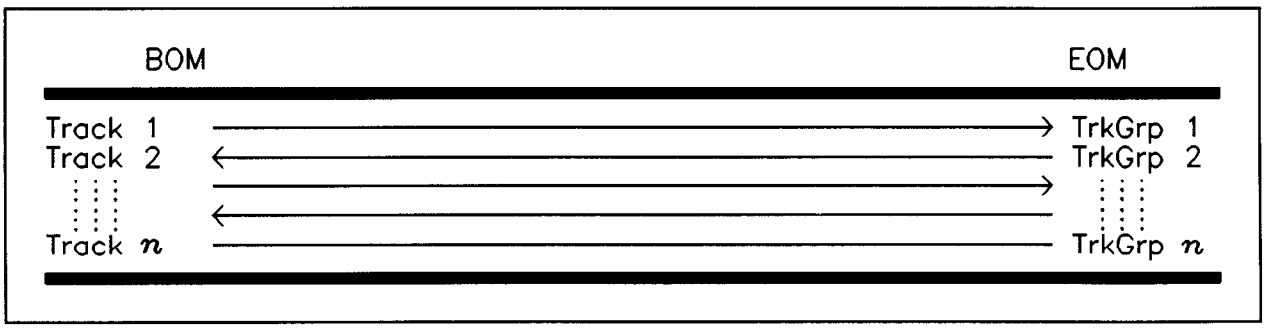

Figure 20 - Serpentine recording example

Copyright International Organization for Standardization
Provided by IHS under license with ISO
No reproduction or networking permitted without license from IHS
Not for Resale

Some multi-track devices have only one track group, using a parallel storage format that supports the simultaneous recording of all available tracks (see figure 21).

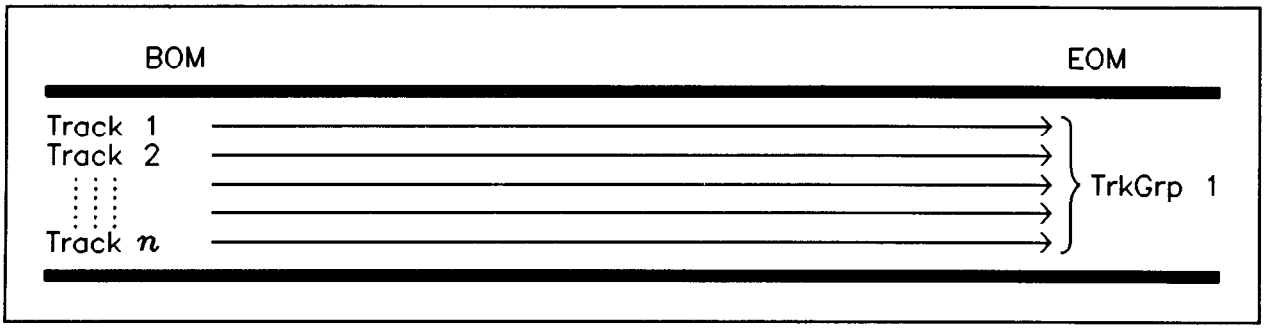

Figure 21 - Parallel recording example

The serpentine and parallel recording formats shown in the previous examples define tracks as longitudinal patterns of recorded information. One other storage format used by some devices records tracks diagonally across the medium. This recording technique is known as helical scan (see figure 22).

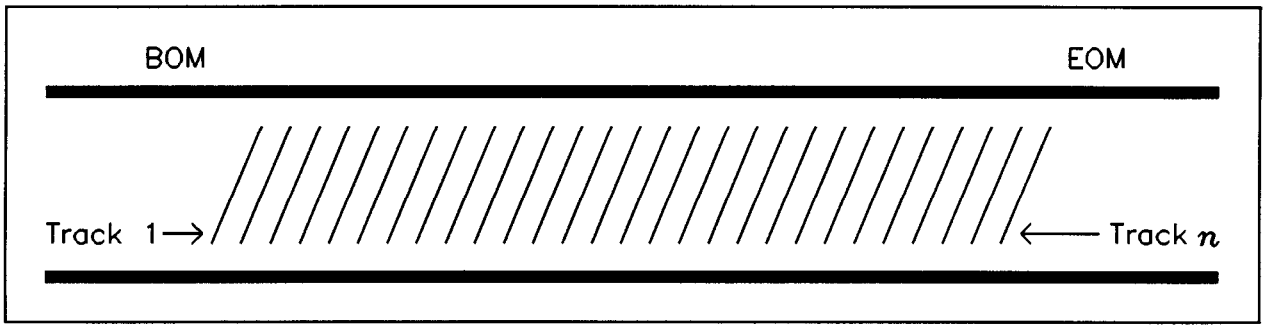

Figure 22 - Helical scan recording example

For most recording formats, an area at beginning-of-medium contains a format identification in the form of a tone burst or some other recognizable pattern. User data is not recorded in this area. The format identification is an attribute of a volume used for interchange purposes and is defined in applicable standards.

When writing, the initiator needs an indication that it is approaching the end of the permissible recording area. This position, called early-warning (EW), is typically reported to the initiator at a position early enough for the device to write any buffered data to the medium while still leaving enough room for additional recorded labels or filemarks. Some International Standards include physical requirements for a marker placed on the medium to be detected by the device as early-warning (see figure 23).

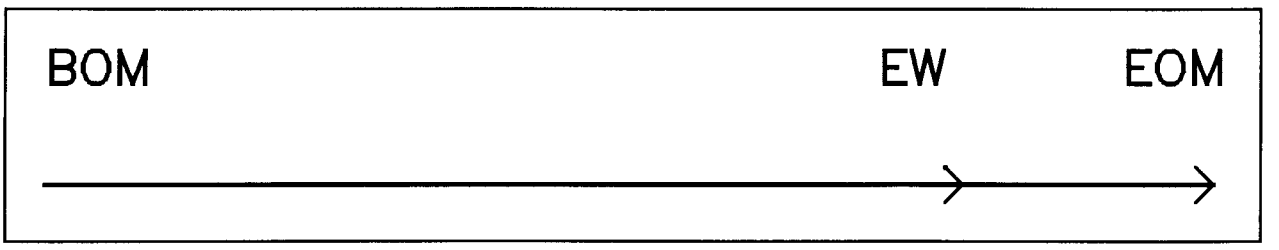

Figure 23 - Early-warning example

For devices which implement large data buffers, the early-warning position defined by a physical marker may be too close to the end of the recording region to permit emptying the data buffer(s). For these devices, a logical

Copyright International Organization for Standardization
Provided by IHS under license with ISO
No reproduction or networking permitted without license from IHS Not for Resale

concept of early-warning is often used to signal the initiator at an appropriate location prior to the physical marker.

10.1.3 Partitions within a volume

Another attribute of a volume is called a partition. Partitions consist of one or more non-overlapped mini-volumes, each with its own beginning and ending points, contained within single physical volume. Each partition (*x*) within a volume has a defined beginning-of-partition (BOP *x*), an early-warning position (EW *x*), and an end-of-partition (EOP *x*).

All volumes have a minimum of one partition called partition 0, the default data partition. For devices which support only one partition, the beginning-of-partition zero (BOP 0) may be equivalent to the beginning-of-medium and the end-of-partition zero (EOP 0) may be equivalent to the end-of-medium.

When a volume is mounted, it is logically positioned to beginning of the default data partition (BOP 0). When a REWIND command is received in any partition (*x*), the device positions to the beginning-of-partition (BOP *x*).

Partitions on a volume do not need to be recorded in any defined order, nor do all partition numbers in a sequence need to be present on a volume. It is sufficient for a device to be able to locate a partition, given its code value, or determine that it does or does not exist on the volume. For interchange, information about which partitions are present on a volume may be stored on the volume in a device-defined area (possibly unavailable to the initiator) or the information may be an intrinsic attribute of the device implementation.

Figure 24 shows a possible partition implementation for a four-track serpentine recording device, assuming that each track group defines a partition.

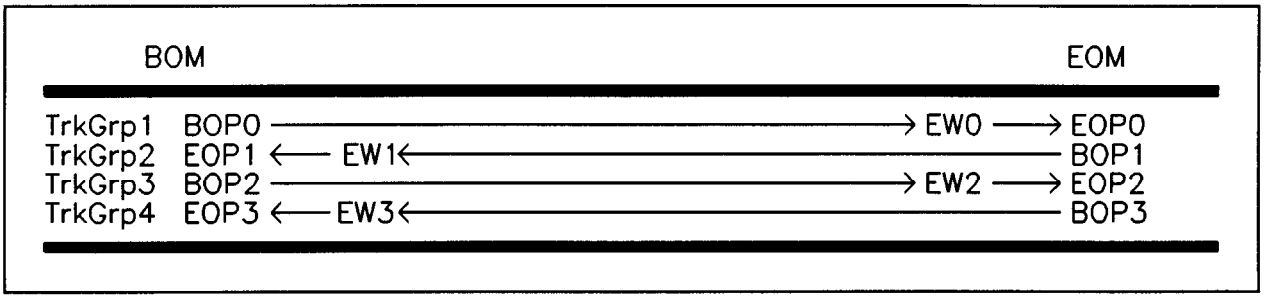

Figure 24 - Partitioning example - one partition per track group

Another possible partition implementation for this four-track serpentine recording device is shown in figure 25, using two track groups to define each partition.

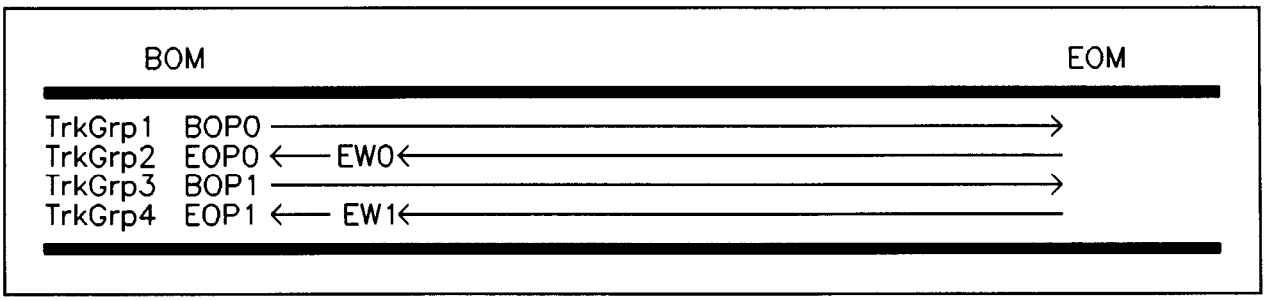

Figure 25 - Partitioning example - one partition per two track groups

The previous examples show the beginning and ending points for a partition aligned with physical bounds of the medium. This is not a mandatory requirement for partitioning; it is sufficient for a device to be able to locate to and stay in any partition bounded by a BOP *x* and EOP *x*. In this case, a recorded mark or some other device-

Copyright International Organization for Standardization
Provided by IHS under license with ISO
No reproduction or networking permitted without license from IHS
Not for Resale

recognizable attribute could be used to delineate the partitions. Figure 26 shows a possible two-partition implementation for a device with only one track group.

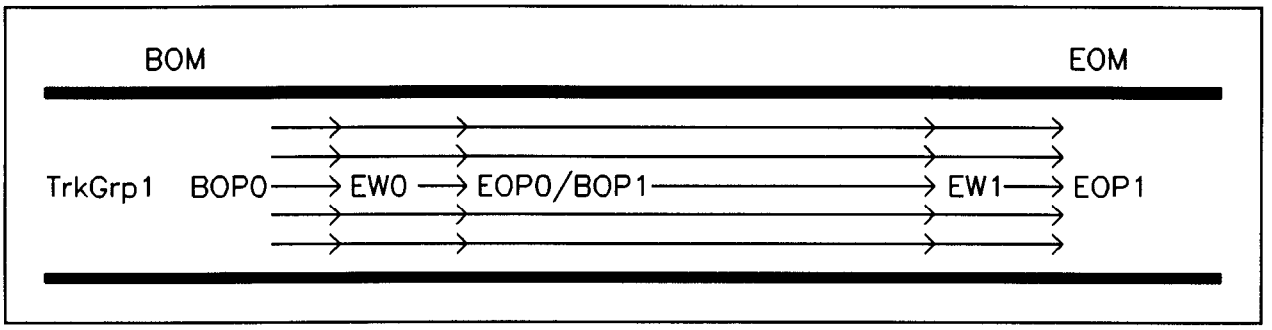

Figure 26 - Partitioning example - two partitions per track group

Three methods are defined in the MODE SENSE and MODE SELECT commands for managing partitions; each method is progressively more difficult to implement and manage:

a) device-defined fixed locations;
b) device-defined based on an initiator supplied number of partitions and a device specific allocation algorithm; and,
c) definition by name and capacity by an initiator.

10.1.4 Logical elements within a partition

The area between BOP *x* and EOP *x* on a typical recorded volume contains at least two types of initiator accessible elements, data blocks and tape marks. These elements are controlled and transferred between the initiator and the medium using READ, READ REVERSE, WRITE, and WRITE FILEMARKS commands.

A unit of data supplied or requested by an initiator is called a logical block. Logical blocks are stored according to the specifications of the format for the volume and may be recorded as one or more physical blocks on the medium. When the physical block and the logical block are not recorded in a one-to-one relationship, it is the responsibility of the device to perform all blocking, de-blocking, padding, stripping, splitting or rebuilding of the logical data block(s) sent by an initiator.

Filemarks are special recorded elements containing no user data. The filemark format is defined in some International Standards. Initiators traditionally use filemarks to separate user data from labels and logical groupings of data from each other. Since some format standards do not define an explicit end-of-data (EOD), host software has often used conventions with filemarks to represent an EOD indication. At least one International Standard specifically defines filemark use for this purpose. In some implementations, the device's EOD definition may be specified by the initiator using the MODE SELECT command.

A setmark is another type of special recorded element containing no user data, providing a segmentation scheme hierarchically superior to filemarks. This level of segmentation is useful for some high capacity storage devices to provide concise addressing and fast positioning to specific sets of data within a partition. In some implementations, the detection and reporting of setmarks may be controlled by the initiator using the MODE SELECT command.

Inter-block gaps, the gaps between blocks, filemarks, and setmarks, are introduced on the medium at the time a block or mark is written without explicit action by the initiator. Minimum and maximum lengths for inter-block gaps are defined in some International Standards. In some devices, the length of inter-block gaps may be selected by the initiator using the MODE SELECT command while in other devices the gaps are fixed and non-changeable.
In addition to blocks, filemarks, and setmarks, erase gaps may be recorded on the medium through use of the ERASE command or device-initiated error recovery actions. Although explicitly recorded on the medium, there is normally no distinction between two contiguous erase gaps. An erase gap may be a length of erased medium or

Copyright International Organization for Standardization
Provided by IHS under license with ISO
No reproduction or networking permitted without license from IHS Not for Resale

a recorded pattern not distinguishable as a block or mark. Minimum and maximum lengths for erase gaps are defined in some International Standards while some devices may have no implementation of an erase gap.

After writing data from BOP *x*, the medium is considered to be a contiguous grouping of blocks, filemarks, setmarks, and gaps. Certain International Standards define gap lengths which, if exceeded, are to be considered as having reached blank medium. Depending on the format, this blank medium may be treated as an end-of-data indication, an error recovery area, or an unrecoverable medium error causing an interchange error. Unrecorded volumes (new or erased) may exhibit blank medium characteristics if an attempt is made to read or space the volume before data has been written.

A sequential-access device may be capable of supporting fixed or variable length blocks. The concept of fixed or variable mode for writing and reading blocks only indicates the method by which the initiator specifies the size of a logical block for transfer and not the method of recording physical blocks on the medium. However, a device that supports only fixed-length physical blocks may only be capable of supporting logical blocks of the same length. The length of a logical block is always described in bytes. The length of a physical block may or may not be recorded as an exact byte count, depending on the format.

10.1.5 Data buffering

A device may contain a temporary storage area capable of holding one or more logical blocks - a data buffer. A device data buffer may include any combination of blocks, filemarks, and setmarks in the process of being written to the medium, or it may contain read-ahead data blocks transferred from the medium.

A device with a data buffer may be capable of operating in either a buffered mode or an unbuffered mode. A device with no data buffer operates only in unbuffered mode. Either term is only applicable to the manner in which the device manages information to be written to the medium. Buffered mode is not applicable during read commands, regardless of whether read data passes through a data buffer.

A device operating in buffered mode may return GOOD status for write operations when all write data has been successfully transferred from the initiator into the device data buffer. For devices operating in unbuffered mode, GOOD status is not returned until all requested data, filemarks, or setmarks are successfully recorded on the medium.

When issuing a buffered WRITE FILEMARKS command with the immediate bit set to one, GOOD status is returned as soon as the command is validated. A WRITE FILEMARKS command with the immediate bit set to zero causes any buffered blocks, filemarks, and setmarks to be written to the medium. Upon successful completion of this process, which is called a synchronize operation, no blocks, filemarks, or setmarks remain in the data buffer which have not been written to the medium. A synchronize operation has no effect on a data buffer which contains only read-ahead data or write data which has already been successfully written to the medium.

Should an unrecoverable write error occur while in buffered mode, the device generates an error condition to the current active command. If no command is active, the error may be reported on the next applicable operation as a deferred error (see 8.2.14.2). For some implementations, asynchronous event notification or extended contingent allegiance may be required. Refer to 7.5.5 and 7.7 for descriptions of asynchronous event notification and extended contingent allegiance protocol.

The READ POSITION command may be used to determine the number and storage space of buffered blocks not written before the unrecoverable error was encountered.

A device with read-ahead data blocks in the data buffer does not report an unrecovered read error until the data block in error is requested by an initiator.

--`,,```,,,,````-`-`,,`,,`,`,,`---
Copyright International Organization for Standardization
Provided by IHS under license with ISO
No reproduction or networking permitted without license from IHS Not for Resale

10.1.6 Recorded object descriptors (block identifiers)

Some recording formats specify that recorded objects (blocks, filemarks, and setmarks) have identifiers included in the recorded information to help determine write sequence and also to help detect device positioning errors. The identifier values are unique within a partition and may be unique within a volume.

The use of the term block identifier may imply some arithmetic sequence applied to the assignment of recorded objects. The block identifier assignment algorithm may be defined in an applicable format standard.

For some pre-formatted volumes, the identifiers are associated with physical blocks. In variable-length implementations, the identifier can be associated with a physical block when the logical block and the physical block have a one-to-one relationship on the medium.

Some formats may carry both physical and logical block identifiers recorded on the medium. When a logical block is split over more than one physical block, or multiple logical blocks are concatenated to form a physical block, the logical block identifier and the physical block identifier are not the same. Filemarks and setmarks may or may not have recorded identifiers, but if identifiers are used in the format, then each mark is assigned a value even if it is not explicitly recorded.

The READ POSITION and LOCATE commands use four-byte fields to hold these format dependent identifiers. For some implementations, this value may correspond to a real physical location; however, it is sufficient for the device to map the identifier to a value representing the unique recorded object. With this capability, the READ POSITION command may be used to report a device-defined block identifier and the initiator may use this value with a LOCATE command to position to the same location at some future time (provided the volume has not been rewritten in the interim).

10.1.7 Direction and position definitions

For sequential-access devices, positioning has the connotation of logically being in, at, before, or after some defined place within a volume. This definition means the position is capable of being repeated under the same circumstances. The orientation of usage for the four words (in, at, before, or after) is in one direction, from BOP *x* toward EOP *x*. All positioning defined below is worded from this perspective. Devices without buffers have some physical position which relates to these logical positions. However, these definitions do not require the medium to have a physical position equivalent to the logical position unless explicitly stated.

The forward direction is defined as logically progressing from BOP *x* toward EOP *x*. The reverse direction is defined as logically progressing from EOP *x* toward BOP *x*. In serpentine devices, the logical forward or reverse direction has an alternating relationship to the physical motion of the medium.

The concept of being in some position means not being outside a defined region. The definition allows the position to be on the boundary of a defined region. When a volume is first mounted, the logical position is always at the beginning of the default data partition (BOP0). Whenever a volume is mounted and the medium motion is stopped, the position is in some partition. While moving between partitions, there is no stable position.

The concept of being at some position indicates being positioned to a logical or physical extremity of a partition. A sequential-access device may be positioned at beginning-of-medium, at BOP *x*, at end-of-data (EOD), at EOP *x*, or at end-of-medium (EOM), since these are stable positions at extremities of a partition.

The concept of being before some position indicates that there is some element (data block, filemark, setmark, or other defined point) which may be encountered when moving toward EOP *x*, if the proper commands are issued. Being positioned before a particular data block means that if the device receives a valid READ command, the data block is transferred to the initiator. This position may also be before EW *x* and EOP *x*, since these are defined points within any partition. However, if data has not been written to the end-of-partition, these points may not be accessible by the initiator.

Copyright International Organization for Standardization
Provided by IHS under license with ISO
No reproduction or networking permitted without license from IHS Not for Resale

The concept of being after some position indicates that there is some element (data block, filemark, setmark, or other defined point) on the BOP *x* side of the current position which may be encountered if the proper commands are issued. When a READ command for a single data block has been successfully executed, the logical position is after the transferred data block.

10.1.8 Error reporting

If any of the following conditions occur during the execution of a command the target shall return CHECK CONDITION status. The appropriate sense key and additional sense code should be set. The following list illustrates some error conditions and the applicable sense keys. The list does not provide an exhaustive enumeration of all conditions that may cause the CHECK CONDITION status.

Condition	Sense Key
Invalid logical block address	ILLEGAL REQUEST
Unsupported option requested	ILLEGAL REQUEST
Target reset or medium change since last command from this initiator	UNIT ATTENTION
Self diagnostic failed	HARDWARE ERROR
Unrecovered read error	MEDIUM ERROR HARDWARE ERROR
Recovered read or write error	RECOVERED ERROR
Overrun or other error that might be resolved by repeating the command	ABORTED COMMAND
Attempt a WRITE, READ, READ REVERSE, VERIFY, or RECOVER BUFFERED DATA command with the fixed bit set to zero and variable block mode is not supported	ILLEGAL REQUEST
Attempt a WRITE, READ, READ REVERSE, VERIFY, or RECOVER BUFFERED DATA command with a fixed bit of zero and requested block length is not supported	ILLEGAL REQUEST
Attempt a WRITE, READ, READ REVERSE, VERIFY, or RECOVER BUFFERED DATA command with a fixed bit of one and MODE SENSE block length set to zero	ILLEGAL REQUEST
Attempt to execute an erase or write-type operation on write protected medium	DATA PROTECT
Deferred write error	MEDIUM ERROR VOLUME OVERFLOW

In the case of an unrecovered read or write error, if the read-write error recovery page (10.3.3.4) is implemented, the current values specify the target error recovery criteria. If this page is not implemented, the error recovery is vendor-specific.

In the case of an unrecovered read error, if the fixed bit is one, the valid bit shall be set to one and the information field shall be set to the requested transfer length minus the actual number of blocks read (not including the unrecovered block). If the fixed bit is zero, the valid bit shall be set to one and the information field shall be set to the requested transfer length. Upon termination, the logical position shall be after the unrecovered block.

Copyright International Organization for Standardization
Provided by IHS under license with ISO
No reproduction or networking permitted without license from IHS Not for Resale

In the case of an unrecovered write error, if unbuffered mode is selected and the fixed bit is set to one, the valid bit shall be set to one and the information field shall be set to the requested transfer length minus the actual number of blocks written. If unbuffered mode is selected and the fixed bit is set to zero, the information field shall be set to the requested transfer length.

In the case of an unrecovered write error or a deferred write error, if buffered mode is selected and the fixed bit is one, the valid bit shall be set to one and the information field shall be set to the total number of blocks, filemarks, and setmarks not written (the number of blocks not transferred from the initiator plus the number of blocks, filemarks, and setmarks remaining in the target's buffer). If buffered mode is selected and the fixed bit is zero, the information field shall be set to the total number of bytes, filemarks, and setmarks not written (the number of bytes not transferred from the initiator plus the number of bytes, filemarks, and setmarks remaining in the target's buffer). In both cases, the value in the information field may exceed the transfer length.

In the case of an unrecovered write error or a deferred write error, if buffered mode 1h is selected, the error shall be reported to the first initiator issuing a command (other than INQUIRY or REQUEST SENSE) or the first initiator responding to asynchronous event notification. If buffered mode 2h is selected, the error shall be reported to the initiator with unwritten data in the buffer.

10.2 Command descriptions for sequential-access devices

The commands for sequential-access devices shall be as shown in table 174.

Table 174 - Commands for sequential-access devices

Command name	Operation code	Type	Subclause
CHANGE DEFINITION	40h	O	8.2.1
COMPARE	39h	O	8.2.2
COPY	18h	O	8.2.3
COPY AND VERIFY	3Ah	O	8.2.4
ERASE	19h	M	10.2.1
INQUIRY	12h	M	8.2.5
LOAD UNLOAD	1Bh	O	10.2.2
LOCATE	2Bh	O	10.2.3
LOG SELECT	4Ch	O	8.2.6
LOG SENSE	4Dh	O	8.2.7
MODE SELECT(06)	15h	M	8.2.8
MODE SELECT(10)	55h	O	8.2.9
MODE SENSE(06)	1Ah	M	8.2.10
MODE SENSE(10)	5Ah	O	8.2.11
PREVENT ALLOW MEDIUM REMOVAL	1Eh	O	9.2.4
READ	08h	M	10.2.4
READ BLOCK LIMITS	05h	M	10.2.5
READ BUFFER	3Ch	O	8.2.12
READ POSITION	34h	O	10.2.6
READ REVERSE	0Fh	O	10.2.7
RECEIVE DIAGNOSTIC RESULTS	1Ch	O	8.2.13
RECOVER BUFFERED DATA	14h	O	10.2.8
RELEASE UNIT	17h	M	10.2.9
REQUEST SENSE	03h	M	8.2.14
RESERVE UNIT	16h	M	10.2.10
REWIND	01h	M	10.2.11
SEND DIAGNOSTIC	1Dh	M	8.2.15
SPACE	11h	M	10.2.12
TEST UNIT READY	00h	M	8.2.16
VERIFY	13h	O	10.2.13
WRITE	0Ah	M	10.2.14
WRITE BUFFER	3Bh	O	8.2.17
WRITE FILEMARKS	10h	M	10.2.15

Key: M = command implementation is mandatory.
O = command implementation is optional.

Copyright International Organization for Standardization
Provided by IHS under license with ISO
No reproduction or networking permitted without license from IHS Not for Resale

The following command codes are vendor-specific: 02h, 06h, 07h, 09h, 0Ch, and 0Eh. All other command codes for sequential-access devices are reserved for future standardization.

10.2.1 ERASE command

The ERASE command (see table 175) causes part or all of the medium to be erased beginning at the current position on the logical unit. As used here, erased means either the medium shall be erased or a pattern shall be written on the medium that appears as a gap to the target.

Table 175 - ERASE command

Bit / Byte	7	6	5	4	3	2	1	0
0	Operation code (19h)							
1	Logical unit number			Reserved			Immed	Long
2	Reserved							
3	Reserved							
4	Reserved							
5	Control							

An immediate (Immed) bit of zero indicates that the target shall not return status until the erase operation has completed. An Immed bit of one indicates that the target shall return status as soon as the command has been validated. If CHECK CONDITION status is returned for an ERASE command with an Immed bit of one, the erase operation shall not be performed.

A long bit of one indicates that all remaining medium in the current partition shall be erased beginning at the current logical position. If the Immed bit is one, the target shall return status as soon as all buffered commands have completed execution and the command descriptor block of the ERASE command has been validated. The logical position following an ERASE command with a long bit of one is not specified by this International Standard.

NOTE 138 Some targets may reject an ERASE command with the long bit set to one if the logical unit is not at beginning-of-partition.

A long bit of zero specifies an erase gap defined by the gap size field in the device configuration page (10.3.3.1). If the gap size is zero or the field is not supported, a device defined erase gap operation shall be performed. If the Immed bit is one, the target shall return status as soon as the command descriptor block has been validated. Erase gaps may be used in initiator controlled error recovery or update in place applications.

If the logical unit encounters early-warning during an ERASE command, and any buffered data, filemarks, or setmarks remain to be written, the target action shall be as defined for the early-warning condition of the WRITE command (10.2.14). If the long bit is zero, the erase operation shall terminate with CHECK CONDITION status and return sense data as defined for the WRITE command. Any buffered erases are not reported as part of the information field.

--`,,```,,,,````-`-`,,`,,`,`,,`---
Copyright International Organization for Standardization
Provided by IHS under license with ISO
No reproduction or networking permitted without license from IHS Not for Resale

10.2.2 LOAD UNLOAD command

The LOAD UNLOAD command (see table 176) requests that the target enable or disable the logical unit for further operations. This command may also be used to request a retension function. Prior to performing the load or unload operation, the target shall ensure that all buffered data, filemarks, and setmarks have been transferred to the medium.

Table 176 - LOAD UNLOAD command

Bit / Byte	7	6	5	4	3	2	1	0
0	Operation code (1Bh)							
1	Logical unit number			Reserved				Immed
2	Reserved							
3	Reserved							
4	Reserved					EOT	Reten	Load
5	Control							

An immediate (Immed) bit of zero indicates that the target shall not return status until the load or unload operation has completed. An Immed bit of one indicates that the target shall return status as soon as all buffered commands have completed execution and the command descriptor block of the LOAD UNLOAD command has been validated. If CHECK CONDITION status is returned for a LOAD UNLOAD command with an Immed bit of one, the load or unload operation shall not be performed.

NOTE 139 For compatibility with devices implemented prior to this International Standard, a WRITE FILEMARKS command with an Immed bit of zero should be used to ensure that all buffered data, filemarks, or setmarks have been transferred to the medium prior to issuing a LOAD UNLOAD command with an Immed bit of one.

An end-of-tape (EOT) bit of one indicates that an unload operation (load bit set to zero) shall position the medium at end-of-medium for removal from the device. An EOT bit of zero indicates that an unload operation shall position the medium at beginning-of-medium for removal from the device.

An EOT bit of one and a load bit of one shall cause the target to return CHECK CONDITION status and the sense key shall be set to ILLEGAL REQUEST in the sense data.

A retension (ReTen) bit of one indicates that the medium on the logical unit shall have the correct tension applied. Implementation of the retension function is device specific.

If the load bit is set to one, the medium in the logical unit shall be loaded and positioned to the beginning-of-partition zero. If the load bit is zero, the medium in the logical unit shall be positioned for removal at the extreme position along the medium specified by the EOT bit. Following successful completion of an unload operation, the target shall return CHECK CONDITION status with the sense key set to NOT READY for all subsequent medium-access commands until a new volume is mounted or a load operation is successfully completed.

When operating in buffered mode 1h or 2h (see 10.3.3), the target shall discard any unwritten buffered data after the LOAD UNLOAD command is validated if the previous command was terminated with CHECK CONDITION status and the device is unable to continue successfully writing.

Copyright International Organization for Standardization
Provided by IHS under license with ISO
No reproduction or networking permitted without license from IHS Not for Resale

10.2.3 LOCATE command

LOCATE command (see table 177) causes the target to position the logical unit to the specified block address in a specified partition. Upon completion, the logical position shall be before the specified location. Prior to performing the locate operation, the target shall ensure that all buffered data, filemarks, and setmarks have been transferred to the medium.

Table 177 - LOCATE command

Bit / Byte	7	6	5	4	3	2	1	0
0	Operation code (2Bh)							
1	Logical unit number			Reserved		BT	CP	Immed
2	Reserved							
3	(MSB)							
4	Block address							
5								
6								(LSB)
7	Reserved							
8	Partition							
9	Control							

A block address type (BT) bit of one indicates the value in the block address field shall be interpreted as a device-specific value. A BT bit of zero indicates the value in the block address field shall be interpreted as an SCSI logical block address.

A change partition (CP) bit of one indicates that a change to the partition specified in the partition field is to occur prior to positioning to the block specified in the block address field. A CP bit of zero indicates no partition change is to be made and the partition field is to be ignored.

An immediate (Immed) bit of zero indicates that the target shall not return status until the locate operation has completed. An Immed bit of one indicates that the target shall return status as soon as all buffered commands have completed execution and the command descriptor block of the LOCATE command has been validated. If CHECK CONDITION status is returned for a LOCATE command with an Immed bit of one, the locate operation shall not be performed.

The block address field (see 10.1.6) specifies the block address to which the target shall position the medium based on the current setting of the BT bit.

The partition field specifies which partition to select if the CP bit is one. Refer to the sequential-access device model (see 10.1.3) and the medium partition pages (see 10.3.3.2 and 10.3.3.3) for additional information about partitioning.

--`,,```,,,,````-`-`,,`,,`,`,,`---

Copyright International Organization for Standardization
Provided by IHS under license with ISO
No reproduction or networking permitted without license from IHS Not for Resale

10.2.4 READ command

The READ command (see table 178) requests that the target transfer one or more block(s) of data to the initiator beginning with the next block on the logical unit.

Table 178 - READ command

Bit / Byte	7	6	5	4	3	2	1	0
0	Operation code (08h)							
1	Logical unit number			Reserved			SILI	Fixed
2	(MSB)							
3	Transfer length							
4								(LSB)
5	Control							

The fixed bit specifies whether fixed-length or variable-length blocks are to be transferred. Refer to the READ BLOCK LIMITS command (see 10.2.5) for additional information about fixed and variable block mode.

If the fixed bit is one, the transfer length specifies the number of fixed-length blocks to be transferred, using the current block length reported in the mode parameters block descriptor (see 8.3.3). If the fixed bit is zero, a variable-length block is requested with the transfer length specifying the maximum number of bytes allocated for the returned data.

A successful READ command with a fixed bit of one shall transfer the requested transfer length times the current block length in bytes to the initiator. A successful READ command with a fixed bit of zero shall transfer the requested transfer length in bytes to the initiator. Upon completion, the logical position shall be after the last block transferred (end-of-partition side).

If the suppress incorrect length indicator (SILI) bit is one and the fixed bit is zero, the target shall:

a) report CHECK CONDITION status for an incorrect length condition only if the overlength condition exists (see 10.1.8) and the block length field in the mode parameter block descriptor is nonzero (see 8.3.3).
b) not report CHECK CONDITION status if the only error is the underlength condition (see 10.4), or if the only error is the overlength condition and the block length field of the mode parameters block descriptor is zero.

NOTE 140 Since the residue information normally provided in the information field of the sense data may not be available when the SILI bit is set, other methods for determining the actual block length should be used (e.g. including length information in the data block).

If the SILI bit is one and the fixed bit is one, the target shall terminate the command with CHECK CONDITION status and the sense key shall be set to ILLEGAL REQUEST with an additional sense code of INVALID FIELD IN CDB.

If the SILI bit is zero and an incorrect length block is read, CHECK CONDITION status shall be returned and the ILI and valid bits shall be set to one in the sense data. Upon termination, the logical position shall be after the incorrect length block (end-of-partition side). If the fixed bit is one, the information field shall be set to the requested transfer length minus the actual number of blocks read (not including the incorrect length block). If the fixed bit is zero, the information field shall be set to the requested transfer length minus the actual block length. Targets that do not support negative values shall set the information field to zero if the overlength condition exists (see 10.4).

Copyright International Organization for Standardization
Provided by IHS under license with ISO
No reproduction or networking permitted without license from IHS Not for Resale

NOTE 141 In the above case with the fixed bit of one, only the position of the incorrect-length logical block can be determined from the sense data. The actual length of the incorrect block is not reported. Other means may be used to determine its actual length (e.g. read it again with the fixed bit set to zero).

A transfer length of zero indicates that no data shall be transferred. This condition shall not be considered an error and the logical position shall not be changed.

If the logical unit encounters a filemark during a READ command, CHECK CONDITION status shall be returned and the filemark and valid bits shall be set to one in the sense data. The sense key shall be set to NO SENSE or RECOVERED ERROR, as appropriate. Upon termination, the logical position shall be after the filemark (end-of-partition side). If the fixed bit is one, the information field shall be set to the requested transfer length minus the actual number of blocks read (not including the filemark). If the fixed bit is zero, the information field shall be set to the requested transfer length.

If the logical unit encounters a setmark during a READ command and the RSmk bit is set to one in the device configuration page (see 10.3.3.1), CHECK CONDITION status shall be returned and the filemark and valid bits shall be set to one in the sense data. The sense key shall be set to NO SENSE or RECOVERED ERROR, as appropriate, and the additional sense code shall be set to SETMARK DETECTED. Upon termination, the logical position shall be after the setmark (end-of-partition side). If the fixed bit is one, the information field shall be set to the requested transfer length minus the actual number of blocks read (not including the setmark). If the fixed bit is zero, the information field shall be set to the requested transfer length. The target shall not return CHECK CONDITION when a setmark is encountered if the RSmk bit is set to zero or if this option is not supported.

If the logical unit encounters early-warning during a READ command and the REW bit is set to one in the device configuration page (see 10.3.3.1), CHECK CONDITION status shall be returned upon completion of the current block. The sense key shall be set to NO SENSE or RECOVERED ERROR, as appropriate. The EOM and valid bits shall be set to one in the sense data. Upon termination, the logical position shall be after the last block transferred (end-of-partition side). If the fixed bit is one, the information field shall be set to the requested transfer length minus the actual number of blocks read. If the fixed bit is zero, the information field shall be set to the requested transfer length minus the actual block length. The target shall not return CHECK CONDITION status when early-warning is encountered if the REW bit is zero or if the REW option is not supported.

NOTE 142 A REW bit of one is not recommended for most system applications since read data may be present after early-warning.

If the logical unit encounters end-of-data during a READ command, CHECK CONDITION status shall be returned, the sense key shall be set to BLANK CHECK, and the valid bit shall be set to one in the sense data. If end-of-data is encountered at or after early-warning, the EOM bit shall also be set to one. Upon termination, the logical position shall be after the last recorded logical block (end-of-partition side). If the fixed bit is one, the information field shall be set to the requested transfer length minus the actual number of blocks read. If the fixed bit is zero, the information field shall be set to the requested transfer length.

If the logical unit encounters end-of-partition during a READ command, CHECK CONDITION status shall be returned, the sense key shall be set to MEDIUM ERROR, and the EOM and valid bits shall be set to one in the sense data. The medium position following this condition is not defined. If the fixed bit is one, the information field shall be set to the requested transfer length minus the actual number of blocks read. If the fixed bit is zero, the information field shall be set to the requested transfer length.

Copyright International Organization for Standardization
Provided by IHS under license with ISO
No reproduction or networking permitted without license from IHS Not for Resale

10.2.5 READ BLOCK LIMITS command

The READ BLOCK LIMITS command (see table 179) requests that the logical unit's block length limits capability be returned. The READ BLOCK LIMITS data shown in table 180 shall be returned.

Table 179 - READ BLOCK LIMITS command

Bit / Byte	7	6	5	4	3	2	1	0
0	Operation code (05h)							
1	Logical unit number			Reserved				
2	Reserved							
3	Reserved							
4	Reserved							
5	Control							

Table 180 - READ BLOCK LIMITS data

Bit / Byte	7	6	5	4	3	2	1	0
0	Reserved							
1	(MSB)							
2	Maximum block length limit							
3								(LSB)
4	(MSB)							
5	Minimum block length limit							(LSB)

If the maximum block length limit value equals the minimum block length limit value, the logical unit supports the transfer of data in the fixed-block mode only, with the block length equal to the given value. In this case the fixed bit shall be set to one in the WRITE and READ commands.

If the maximum block length limit value is not equal to the minimum block length limit value, the logical unit supports the transfer of data in either fixed-block or variable-block modes, with the block length constrained between the given limits in either mode. The transfer mode is controlled by the fixed bit in the WRITE or READ commands. If the maximum block limit is zero a maximum block length is not specified.

Copyright International Organization for Standardization
Provided by IHS under license with ISO
No reproduction or networking permitted without license from IHS Not for Resale

10.2.6 READ POSITION command

The READ POSITION command (see table 181) reports the current position of the logical unit and any data blocks in the buffer. No medium movement shall occur as a result of the command.

Table 181 - READ POSITION command

Bit / Byte	7	6	5	4	3	2	1	0
0	Operation code (34h)							
1	Logical unit number			Reserved				BT
2	Reserved							
3	Reserved							
4	Reserved							
5	Reserved							
6	Reserved							
7	Reserved							
8	Reserved							
9	Control							

A block address type (BT) bit of one requests the target to return its current first block location and last block location as a device-specific value. A BT bit of zero requests the target to return the first block location and the last block location as an SCSI logical block address (relative to a partition).

If the logical unit is not capable of reporting block locations, the BPU bit shall be set to one in the returned data. Support for this option of the READ POSITION command is indicated by a BIS bit set to one in the device configuration page (see 10.3.3.1).

The READ POSITION data shown in table 182 shall be returned.

Copyright International Organization for Standardization
Provided by IHS under license with ISO
No reproduction or networking permitted without license from IHS Not for Resale

Table 182 - READ POSITION data format

Bit / Byte	7	6	5	4	3	2	1	0
0	BOP	EOP	Reserved			BPU	Reserved	
1	Partition number							
2	Reserved							
3	Reserved							
4	(MSB)							
— — —				First block location				
7								(LSB)
8	(MSB)							
— — —				Last block location				
11								(LSB)
12	Reserved							
13	(MSB)							
— — —				Number of blocks in buffer				
15								(LSB)
16	(MSB)							
— — —				Number of bytes in buffer				
19								(LSB)

A beginning of partition (BOP) bit of one indicates that the logical unit is at the beginning-of-partition in the current partition. A BOP bit of zero indicates that the current logical position is not at the beginning-of-partition.

An end of partition (EOP) bit of one indicates that the logical unit is positioned between early-warning and end-of-partition in the current partition. An EOP bit of zero indicates that the current logical position is not between early-warning and end-of-partition.

NOTE 143 The BOP and EOP indications are not necessarily a result of a physical tape marker (e.g. reflective marker).

A block position unknown (BPU) bit of one indicates that the first and last block locations are not known or cannot be obtained. A BPU bit of zero indicates that the first and last block location fields contain valid position information.

The partition number field reports the partition number for the current logical position. If the logical unit only supports one partition for the medium, this field shall be set to zero.

The first block location field indicates the block address associated with the current logical position. The value shall indicate the block address of the next data block to be transferred between the initiator and the target if a READ or WRITE command is issued.

The last block location field indicates the block address (see 10.1.6) associated with the next block to be transferred from the buffer to the medium. The value shall indicate the block address of the next data block to be transferred between the buffer and the medium. If the buffer does not contain a whole block of data or is empty, the value reported for the last block location shall be equal to the value reported for the first block location.

NOTE 144 The information provided by the first and last block location fields can be used in conjunction with the LOCATE command to position the medium at the appropriate logical block on another device in the case of unrecoverable errors on the first device.

The number of blocks in buffer field indicates the number of data blocks in the target's buffer that have not been written to the medium.

Copyright International Organization for Standardization
Provided by IHS under license with ISO
No reproduction or networking permitted without license from IHS Not for Resale

The number of bytes in buffer field indicates the total number of data bytes in the target's buffer that have not been written to the medium.

10.2.7 READ REVERSE command

The READ REVERSE command (see table 183) requests that the target transfer one or more block(s) of data to the initiator beginning at the current position on the logical unit.

Table 183 - READ REVERSE command

Bit / Byte	7	6	5	4	3	2	1	0
0	Operation code (0Fh)							
1	Logical unit number			Reserved			SILI	Fixed
2	(MSB)							
3	Transfer length							
4								(LSB)
5	Control							

The execution of this command is similar to the READ command except that medium motion is in the reverse direction. All block(s), and the byte(s) within the block(s), are transferred in the reverse order. The order of bits within each byte shall not be changed. Upon completion of a READ REVERSE command, the logical position shall be before the last block transferred (beginning-of-partition side).

Refer to the READ command (see 10.2.4) for a description of the fixed bit, the SILI bit, the transfer length field, and any associated error conditions.

Filemarks, setmarks, incorrect length blocks, and unrecovered read errors are handled the same as in the READ command, except that upon termination the logical position shall be before the filemark, setmark, incorrect length block, or unrecovered block (beginning-of-partition side).

If the logical unit encounters beginning-of-partition during a READ REVERSE command, CHECK CONDITION status shall be returned and the EOM and valid bits shall be set to one in the sense data. The sense key shall be set to NO SENSE or RECOVERED ERROR, as appropriate. If the fixed bit is one, the information field shall be set to the requested transfer length minus the actual number of blocks transferred. If the fixed bit is zero, the information field shall be set to the requested transfer length.

Copyright International Organization for Standardization
Provided by IHS under license with ISO
No reproduction or networking permitted without license from IHS Not for Resale

10.2.8 RECOVER BUFFERED DATA command

The RECOVER BUFFERED DATA command (see table 184) is used to recover data that has been transferred to the target's buffer but has not been successfully written to the medium. It is normally used to recover from error or exception conditions that make it impossible to write the buffered data to the medium. One or more RECOVER BUFFERED DATA commands may be required to recover all unwritten buffered data.

Table 184 - RECOVER BUFFERED DATA command

Bit / Byte	7	6	5	4	3	2	1	0
0	Operation code (14h)							
1	Logical unit number			Reserved			SILI	Fixed
2	(MSB)							
3	Transfer length							
4								(LSB)
5	Control							

The execution of this command is similar to the READ command except that the data is transferred from the target's buffer instead of the medium. The order in which block(s) are transferred is defined by the RBO bit in the device configuration page (see 10.3.3.1). If the RBO bit is not implemented, block(s) are transferred in the same order they would have been transferred to the medium.

Refer to the READ command (see 10.2.4) for a description of the fixed bit, the SILI bit, the transfer length field, and any associated error conditions.

If the fixed bit is zero, no more than the requested transfer length shall be transferred to the initiator. If the requested transfer length is smaller than the actual length of the logical block to be recovered, only the requested transfer length shall be transferred to the initiator and the remaining data for the current logical block shall be discarded.

NOTE 145 During recovery operations involving unknown block sizes, the initiator should select the maximum block length supported by the target to ensure that all buffered data will be transferred and set the fixed bit to zero.

If a buffered filemark is encountered during a RECOVER BUFFERED DATA command, CHECK CONDITION status shall be returned, the sense key shall be set to NO SENSE, and the filemark and valid bits shall be set to one in the sense data. Upon termination, the logical position shall be after the filemark. If the fixed bit is one, the information field shall be set to the requested transfer length minus the actual number of blocks transferred (not including the filemark).

If the fixed bit is zero, the information field shall be set to the requested transfer length. If a buffered setmark is encountered during a RECOVER BUFFERED DATA command and the RSmk bit is set to one in the device configuration page (see 10.3.3.1), CHECK CONDITION status shall be returned and the filemark and valid bits shall be set to one in the sense data. The sense key shall be set to NO SENSE and the additional sense code shall be set to SETMARK DETECTED. Upon termination, the logical position shall be after the setmark. If the fixed bit is one, the information field shall be set to the requested transfer length minus the actual number of blocks transferred (not including the setmark). If the fixed bit is zero, the information field shall be set to the requested transfer length. The target shall not return CHECK CONDITION when a setmark is encountered if the RSmk bit is zero or if this option is not supported.

If an attempt is made to recover more logical blocks of data than are contained in the target's buffer, CHECK CONDITION status shall be returned, the sense key shall be set to NO SENSE, and the EOM and valid bits shall

Copyright International Organization for Standardization
Provided by IHS under license with ISO
No reproduction or networking permitted without license from IHS Not for Resale

be set to one in the sense data. If the fixed bit is one, the information field shall be set to the requested transfer length minus the actual number of blocks transferred. If the fixed bit is zero, the information field shall be set to the requested transfer length.

10.2.9 RELEASE UNIT command

The RELEASE UNIT command (see table 185) is used to release previously reserved logical units for the requesting initiator, or if it is a third-party release, to another specified SCSI device.

Table 185 - RELEASE UNIT command

Bit / Byte	7	6	5	4	3	2	1	0
0	Operation code (17h)							
1	Logical unit number			3rdPty	Third party device ID			Reserved
2	Reserved							
3	Reserved							
4	Reserved							
5	Control							

The RESERVE UNIT and RELEASE UNIT commands provide the basic mechanism for contention resolution in multiple-initiator systems.

If a valid reservation exists for the I_T_L nexus, the target shall release the reservation and return GOOD status.

A reservation may only be released by the initiator that made it. It is not an error to attempt to release a reservation that is not currently valid or is held by another initiator. In this case, the target shall return GOOD status without altering any other reservation.

10.2.9.1 Third-party release

Third-party release allows an initiator to release a logical unit that was previously reserved using a third-party reservation (see 10.2.10.1).

If the third party (3rdPty) bit is zero, then a third-party release is not requested. If the 3rdPty bit is one, and if the reservation was made using a third-party reservation by the initiator that is requesting the release for the same SCSI device as specified in the third-party device ID, then the target shall release the reservation.

If the 3rdPty bit is one, the target shall not modify the mode parameters for commands received from the third-party device even if the target implements the transfer of mode parameters with a third-party RESERVE UNIT command.

NOTE 146 When a target implements independent storage of mode parameters for each initiator, a third-party RESERVE UNIT command effects a transfer of the current mode parameters. Those set up by the initiator of the RESERVE UNIT are to be set as the mode parameters used for commands from the third-party device (usually a copy master device). A unit attention condition notifies the third-party device of the changed mode parameters. A successful third-party RELEASE UNIT command leaves the transferred parameters intact. The third-party device can issue MODE SENSE and MODE SELECT commands to query and modify the mode parameters.

Copyright International Organization for Standardization
Provided by IHS under license with ISO
No reproduction or networking permitted without license from IHS
Not for Resale

10.2.10 RESERVE UNIT command

The RESERVE UNIT command (see table 186) is used to reserve logical units for the exclusive use of the requesting initiator, or if it is a third-party reservation, to another specified SCSI device.

Table 186 - RESERVE UNIT command

Bit / Byte	7	6	5	4	3	2	1	0
0	Operation code (16h)							
1	Logical unit number			3rdPty	Third party device ID			Reserved
2	Reserved							
3	Reserved							
4	Reserved							
5	Control							

The RESERVE UNIT and RELEASE UNIT commands provide the basic mechanism for contention resolution in multiple-initiator systems.

This command requests that the entire logical unit be reserved for the exclusive use of the initiator until the reservation is superseded by another valid RESERVE UNIT command from the initiator that made the reservation or until released by a RELEASE UNIT command from the same initiator that made the reservation, by a BUS DEVICE RESET message from any initiator, by a hard reset condition, or by a power on cycle. The reservation shall not be granted if the logical unit is reserved by another initiator. It shall be permissible for an initiator to reserve a logical unit that is currently reserved by that initiator.

If the logical unit is reserved for another initiator, the target shall return RESERVATION CONFLICT status.

If, after honouring the reservation, any other initiator attempts to perform any command on the reserved logical unit other than an INQUIRY, REQUEST SENSE, PREVENT ALLOW MEDIUM REMOVAL (with a prevent bit of zero), or a RELEASE UNIT command, the command shall be rejected with RESERVATION CONFLICT status.

10.2.10.1 Third-party reservation

Third-party reservation allows an initiator to reserve a logical unit for another SCSI device. This is intended for use in multiple-initiator systems that use the COPY command.

If the third-party (3rdPty) bit is zero, a third-party reservation is not requested. If the 3rdPty bit is one the target shall reserve the logical unit for the SCSI device specified in the third-party device ID field. The target shall preserve the reservation until it is superseded by another valid RESERVE UNIT command from the initiator that made the reservation or until it is released by the same initiator, by a BUS DEVICE RESET message from any initiator, or a hard reset condition. The target shall ignore any attempt to release the reservation made by any other initiator.

If independent sets of parameters are implemented, a third party reservation shall cause the target to transfer the set of parameters in effect for the initiator of the RESERVE command to the parameters used for commands from the third-party device. Any subsequent command issued by the third-party device is executed according to the mode parameters in effect for the initiator that sent the RESERVE command.

NOTE 147 This transfer of the mode parameters is applicable to target devices which store mode information independently for different initiators. This mechanism allows an initiator to set the mode parameters of a target for the

Copyright International Organization for Standardization
Provided by IHS under license with ISO
No reproduction or networking permitted without license from IHS Not for Resale

use of a copy master (i.e. the third-party device). The third-party copy master may subsequently issue a MODE SELECT command to modify the mode parameters.

10.2.10.2 Superseding reservations

An initiator that currently has a logical unit reserved may modify the current reservation by issuing another RESERVE UNIT command to the same logical unit. The superseding reservation shall release the current reservation if the superseding reservation request is granted. The current reservation shall not be modified if the superseding reservation request cannot be granted. If the superseding reservation cannot be granted because of conflicts with a previous reservation (other than the current reservation), then the target shall return RESERVATION CONFLICT status.

NOTE 148 Superseding reservations allow the third-party SCSI device ID to be changed during a reservation using the third-party reservation option. This capability is necessary for certain situations when using COMPARE, COPY, and COPY AND VERIFY commands.

10.2.11 REWIND command

The REWIND command (see table 187) causes the target to position the logical unit to the beginning-of-partition in the current partition. Prior to performing the rewind operation, the target shall ensure that all buffered data, filemarks, and setmarks have been transferred to the medium.

Table 187 - REWIND command

Bit / Byte	7	6	5	4	3	2	1	0
0	Operation code (01h)							
1	Logical unit number			Reserved				Immed
2	Reserved							
3	Reserved							
4	Reserved							
5	Control							

An immediate (Immed) bit of zero indicates that the target shall not return status until the rewind operation has completed. An Immed bit of one indicates that the target shall return status as soon as all buffered commands have completed execution and the command descriptor block of the REWIND command has been validated. If CHECK CONDITION status is returned for a REWIND command with an Immed bit of one, the rewind operation shall not be performed.

NOTE 149 For compatibility with devices implemented prior to this International Standard, it is suggested that a WRITE FILEMARKS command with an Immed bit of zero be used to ensure that all buffered data, filemarks, or setmarks have been transferred to the medium before issuing a REWIND command with an Immed bit of one.

When operating in buffered mode 1h or 2h (see 10.3.3), the target shall discard any unwritten buffered data after the REWIND command is validated if the previous command was terminated with CHECK CONDITION status and the device is unable to continue successfully writing.

Copyright International Organization for Standardization
Provided by IHS under license with ISO
No reproduction or networking permitted without license from IHS Not for Resale

10.2.12 SPACE command

The SPACE command (see table 188) provides a variety of positioning functions that are determined by the code and count. Both forward and reverse positioning are provided, although some targets may only support a subset of this command. If an initiator requests an unsupported function, the command shall be terminated with CHECK CONDITION status and the sense key shall be set to ILLEGAL REQUEST.

Table 188 - SPACE command

Bit / Byte	7	6	5	4	3	2	1	0
0	Operation (11h)							
1	Logical unit number			Reserved		Code		
2	(MSB)							
3	Count							
4								(LSB)
5	Control							

The code field is defined in table 189.

Table 189 - Code field definition

Code	Description	Support
000b	Blocks	Mandatory
001b	Filemarks	Mandatory
010b	Sequential filemarks	Optional
011b	End-of-data	Optional
100b	Setmarks	Optional
101b	Sequential setmarks	Optional
110b - 111b	Reserved	

When spacing over blocks, filemarks, or setmarks, the count field specifies the number of blocks, filemarks, or setmarks to be spaced over in the current partition. A positive value *N* in the count field shall cause forward positioning (toward end-of-partition) over *N* blocks, filemarks, or setmarks ending on the end-of-partition side of the last block, filemark, or setmark. A zero value in the count field shall cause no change of logical position. A negative value *-N* (two's complement notation) in the count field shall cause reverse positioning (toward beginning-of-partition) over *N* blocks, filemarks, or setmarks ending on the beginning-of-partition side of the last block, filemark, or setmark. Support of spacing in the reverse direction is optional.

If a filemark is encountered while spacing over blocks, the command shall be terminated. The logical position shall be on the end-of-partition side of the filemark if movement was in the forward direction and on the beginning-of-partition side of the filemark if movement was in the reverse direction. CHECK CONDITION status shall be returned to the initiator, the sense key shall be set to NO SENSE, and the filemark and valid bits shall be set to one in the sense data. The information field shall be set to the requested count minus the actual number of blocks spaced over (not including the filemark).

If a setmark is encountered while spacing over blocks or filemarks and the RSmk bit is set to one in the device configuration page (see 10.3.3.1), the command shall be terminated, CHECK CONDITION status shall be returned to the initiator, and the filemark and valid bits shall be set to one in the sense data. The sense key shall be set to NO SENSE and the additional sense code shall be set to SETMARK DETECTED. The information field shall be set to the requested count minus the actual number of blocks or filemarks spaced over (not including the setmark). The logical position shall be on the end-of-partition side of the setmark if movement was in the forward

Copyright International Organization for Standardization
Provided by IHS under license with ISO
No reproduction or networking permitted without license from IHS Not for Resale

direction and on the beginning-of-partition side of the setmark if movement was in the reverse direction. The target shall not return CHECK CONDITION status when a setmark is encountered if the RSmk bit is set to zero or if this option is not supported.

If early-warning is encountered while spacing over blocks, filemarks, or setmarks and the REW bit is set to one in the device configuration page (see 10.3.3.1), CHECK CONDITION status shall be returned, the sense key shall be set to NO SENSE, and the EOM and valid bits shall be set to one in the sense data. The information field shall be set to the requested count minus the actual number of blocks, filemarks, or setmarks spaced over as defined by the code value. If the REW bit is zero or the option is not supported by the target, the target shall not report CHECK CONDITION status at the early-warning point.

NOTE 150 Setting the REW bit is not recommended for most system applications since data may be present after early-warning.

If end-of-data is encountered while spacing over blocks, filemarks, or setmarks, CHECK CONDITION status shall be returned, the sense key shall be set to BLANK CHECK, and the valid bit shall be set to one in the sense data. Additionally, the EOM bit shall be set to one if end-of-data is encountered at or after early-warning. The information field shall be set to the requested count minus the actual number of blocks, filemarks, or setmarks spaced over as defined by the code value.

If the end-of-partition is encountered while spacing forward over blocks, filemarks, or setmarks, CHECK CONDITION status shall be returned, the sense key shall be set to MEDIUM ERROR, the EOM bit shall be set to one, and the valid bit shall be set to one. The information field shall be set to the requested count minus the actual number of blocks, filemarks, or setmarks spaced over as defined by the code value.

If beginning-of-partition is encountered while spacing over blocks, filemarks, or setmarks in the reverse direction, the target shall return CHECK CONDITION status and shall set the sense key to NO SENSE. The EOM and valid bits shall be set to one, and the information field set to the total number of blocks, filemarks, or setmarks not spaced over (the requested number of blocks, filemarks, or setmarks minus the actual number of blocks, filemarks, or setmarks spaced over).

When spacing over sequential filemarks (or setmarks), the count field is interpreted as follows:

a) A positive value *N* shall cause forward movement to the first occurrence of *N* or more consecutive filemarks (or setmarks) being logically positioned after the Nth filemark (or setmark).
b) A zero value shall cause no change in the logical position.
c) A negative value *-N* (2's complement notation) shall cause reverse movement to the first occurrence of *N* or more consecutive filemarks (or setmarks) being logically positioned on the beginning-of-partition side of the Nth filemark (or setmark).

If a setmark is encountered while spacing to sequential filemarks and the RSmk bit is set to one in the device configuration page (see 10.3.3.1), CHECK CONDITION status shall be returned, the filemark bit shall be set to one, and the valid bit shall be set to zero. The sense key shall be set to NO SENSE and the additional sense code shall be set to SETMARK DETECTED. The target shall not return CHECK CONDITION status when a setmark is encountered if the RSmk bit is set to zero or if this option is not supported.

If end-of-partition is encountered while spacing to sequential filemarks or setmarks, CHECK CONDITION status shall be returned, the sense key shall be set to MEDIUM ERROR, the EOM bit shall be set to one, and the valid bit shall be set to zero.

If end-of-data is encountered while spacing to sequential filemarks or setmarks, CHECK CONDITION status shall be returned, the sense key shall be set to BLANK CHECK, and the valid bit shall be set to zero. Additionally, the EOM bit shall be set to one if end-of-data is encountered at or after early-warning.

When spacing to end-of-data, the count field is ignored. Upon successful completion, the medium shall be positioned such that a subsequent write operation would append to the last logically recorded information.

Copyright International Organization for Standardization
Provided by IHS under license with ISO
No reproduction or networking permitted without license from IHS Not for Resale

If end-of-partition is encountered while spacing to end-of-data, CHECK CONDITION status shall be returned, the sense key shall be set to MEDIUM ERROR, the EOM bit shall be set to one, and the valid bit shall be set to zero.

10.2.13 VERIFY command

The VERIFY command (see table 190) requests that the target verify one or more block(s) beginning with the next block on the logical unit.

Table 190 - VERIFY command

Bit / Byte	7	6	5	4	3	2	1	0
0	Operation code (13h)							
1	Logical unit number			Reserved		Immed	BytCmp	Fixed
2	(MSB)							
3	Verification length							
4								(LSB)
5	Control							

An immediate (Immed) bit of zero indicates that the command shall not return status until the verify operation has completed. An Immed bit of one indicates that status shall be returned as soon as the command descriptor block has been validated (but after the data transfer from the initiator, if the BytCmp bit is one).

NOTE 151 In order to ensure that no errors are lost, the initiator should set the Immed bit to zero on the last VERIFY command when issuing a series of VERIFY commands.

A byte compare (BytCmp) bit of zero indicates that the verification shall be simply a medium verification (e.g. CRC, ECC). No data shall be transferred from the initiator to the target.

A BytCmp bit of one indicates that the target shall perform a byte-by-byte compare of the data on the medium and the data transferred from the initiator. Data shall be transferred from the initiator to the target as in a WRITE command. If the BytCmp bit is one and the byte compare option is not supported, the target shall terminate the command with CHECK CONDITION status and the sense key shall be set to ILLEGAL REQUEST.

The verification length specifies the amount of data to verify, in blocks or bytes, as indicated by the fixed bit. Refer to the READ command (see 10.2.4) for a description of the fixed bit and any associated error conditions. If the BytCmp bit is one and the verification length is zero, no data shall be verified and the current logical position shall not be changed. This condition shall not be considered as an error.

The VERIFY command shall terminate when the verification length has been satisfied, when an incorrect length block is encountered, when a filemark is encountered, when a setmark is encountered (if the RSmk bit is one in the device configuration page, see 10.3.3.1), when end-of-data is encountered, when the end-of-partition is encountered, when early-warning is encountered (if the REW bit is one in the device configuration page, see 10.3.3.1), or when an unrecoverable read error is encountered. The status and sense data for each of these conditions are handled in the same manner as in the READ command (see 10.2.4). Upon successful completion of a VERIFY command, the logical position shall be after the last block verified.

If the data does not compare (BytCmp bit of one), the command shall terminate with CHECK CONDITION status, the valid bit shall be set to one, and the sense key shall be set to MISCOMPARE. If the fixed bit is one, the information field shall be set to the requested verification length minus the actual number of blocks successfully verified. If the fixed bit is zero, the information field shall be set to the requested verification length minus the actual number of bytes successfully verified. This number may be larger than the requested verification length if

Copyright International Organization for Standardization
Provided by IHS under license with ISO
No reproduction or networking permitted without license from IHS Not for Resale

the error occurred on a previous VERIFY command with an Immed bit of one. Upon termination, the medium shall be positioned after the block containing the miscompare (end-of-partition side).

10.2.14 WRITE command

The WRITE command (see table 191) requests that the target write the data that is transferred from the initiator to the current position on the logical unit.

Table 191 - WRITE command

Bit / Byte	7	6	5	4	3	2	1	0
0	Operation code (0Ah)							
1	Logical unit number			Reserved				Fixed
2	(MSB)							
3	Transfer length							
4								(LSB)
5	Control							

The fixed bit specifies whether fixed-length or variable-length blocks are to be transferred. See the READ BLOCK LIMITS command (see 10.2.5) for additional information about fixed and variable block mode.

If the fixed bit is one, the transfer length specifies the number of fixed-length blocks to be transferred, using the current block length reported in the mode parameter block descriptor (see 8.3.3). If the fixed bit is zero, a single block is transferred with the transfer length specifying the block length in bytes.

If the transfer length is zero, no data shall be transferred and the current position on the logical unit shall not be changed. This condition shall not be considered an error.

A WRITE command may be buffered or unbuffered, as indicated by the buffered mode field of the mode parameter header (see 10.3.3). For unbuffered operation (buffered mode 0h), the target shall not return GOOD status until all data block(s) are successfully written to the medium. For buffered operation (buffered mode 1h or 2h), the target may return GOOD status as soon as all data block(s) are successfully transferred to the target's buffer.

NOTE 152 For compatibility with devices implemented prior to this version of this International Standard, a WRITE FILEMARKS command with the Immed bit set to zero should be issued when completing a buffered write operation to ensure that all buffered data, filemarks, and setmarks are written to the medium.

If the logical unit encounters early-warning during a WRITE command, an attempt to finish writing any data may be made, as determined by the current settings of the REW and SEW bits in the device configuration page (see 10.3.3.1). The command shall terminate with CHECK CONDITION status and the EOM and valid bits shall be set to one in the sense data. If all data that is to be written is successfully transferred to the medium, the sense key shall be set to NO SENSE or RECOVERED ERROR, as appropriate. If any data that is to be written cannot be transferred to the medium when early-warning is encountered, the sense key shall be set to VOLUME OVERFLOW.

The information field shall be defined as follows:

a) If unbuffered mode is reported in the mode parameter header and the fixed bit is set to one, the information field shall be set to the requested transfer length minus the actual number of blocks written.
b) If unbuffered mode is reported and the fixed bit is set to zero, the information field shall be set to the requested transfer length.

Copyright International Organization for Standardization
Provided by IHS under license with ISO
No reproduction or networking permitted without license from IHS Not for Resale

c) If buffered mode is reported in the mode parameter header and the fixed bit is set to one, the information field shall be set to the total number of blocks, filemarks, and setmarks not written (the number of blocks not transferred from the initiator plus the number of blocks, filemarks, and setmarks remaining in the target's buffer). Note that the value in the information field may exceed the transfer length.
d) If buffered mode is reported and the fixed bit is set to zero, the information field shall be set to the total number of bytes, filemarks, and setmarks not written (the number of bytes not transferred from the initiator plus the number of bytes, filemarks, and setmarks remaining in the target's buffer).

NOTES
153 The value in the information field may exceed the transfer length.
154 The target should ensure that some additional data can be written to the medium (e.g. labels, filemarks, or setmarks) after the first early-warning indication has been returned to the initiator.

If a WRITE command is received while the logical unit is positioned between early-warning and end-of-partition, the target shall return CHECK CONDITION status after attempting to perform the command. The EOM and valid bits shall be set to one in the sense data. If all data that is to be written is successfully transferred to the medium, the information field shall be set to zero. If any data that is to be written is not transferred to the medium prior to encountering end-of-partition, the sense key shall be set to VOLUME OVERFLOW and the information field shall be defined as follows:

a) If the fixed bit is one, the information field shall be set to the requested transfer length minus the actual number of blocks written to the medium.
b) If the fixed bit is zero, the information field shall be set to the requested transfer length.

NOTE 155 In some systems it is important to recognize an error if end-of-partition is encountered during execution of a WRITE command, without regard for whether all data that is to be written is successfully transferred to the medium. By its definition, the VOLUME OVERFLOW sense key may always validly be returned if end-of-partition is encountered while writing, and such usage is recommended. Reporting the MEDIUM ERROR sense key, as was done in some SCSI-1 implementations, may cause confusion as to whether there was really defective medium encountered during execution of the last write command.

10.2.15 WRITE FILEMARKS command

The WRITE FILEMARKS command (see table 192) requests that the target write the specified number of filemarks or setmarks to the current position on the logical unit.

Table 192 - WRITE FILEMARKS command

Bit / Byte	7	6	5	4	3	2	1	0
0	Operation code (10h)							
1	Logical unit number			Reserved			WSmk	Immed
2	(MSB)							
3	Transfer length							
4								(LSB)
5	Control							

If the Write Setmark (WSmk) bit is one, the transfer length specifies the number of setmarks to be written. If the WSmk bit is zero, the transfer length specifies the number of filemarks to be written.

An immediate (Immed) bit of one indicates that the target shall return status as soon as the command descriptor block has been validated. An Immed bit of one is only valid if buffered mode is reported in the mode parameter header (see 10.3.3).

Copyright International Organization for Standardization
Provided by IHS under license with ISO
No reproduction or networking permitted without license from IHS Not for Resale

An Immed bit of zero indicates that the target shall not return status until the write operation has completed. Any buffered data, filemarks, and setmarks shall be written to the medium prior to completing the command.

NOTE 156 Upon completion of any buffered write operation, the initiator can issue a WRITE FILEMARKS command with the Immed bit set to zero and the transfer length field set to zero to ensure that all buffered data, filemarks, and setmarks are successfully written to the medium.

If the logical unit encounters early-warning during a WRITE FILEMARKS command, an attempt to finish writing any buffered data, filemarks, or setmarks may be made, as determined by the current settings of the REW and SEW bits in the device configuration page (see 10.3.3.1). The command shall terminate with CHECK CONDITION status and the EOM and valid bits shall be set to one in the sense data. If all buffered data, filemarks, and setmarks are successfully transferred to the medium, the sense key shall be set to NO SENSE or RECOVERED ERROR, as appropriate. If any buffered data, filemarks, or setmarks to be written are not transferred to the medium when early-warning is encountered, the sense key shall be set to VOLUME OVERFLOW.

The information field shall be defined as follows:

a) If unbuffered mode is reported in the mode parameter header, the information field shall be set to the requested transfer length minus the actual number of filemarks or setmarks written.
b) If buffered mode is reported in the mode parameter header and the buffered data was written in variable block mode (see 10.2.14), the information field shall be set to the total number of bytes, filemarks, and setmarks not written (the number of filemarks or setmarks not transferred from the initiator plus the number of bytes, filemarks and setmarks remaining in the target's buffer). Note that it is possible for the value in the information field to exceed the transfer length.
c) If buffered mode is reported and the buffered data was written in fixed block mode (see 10.2.14), the information field shall be set to the total number of blocks, filemarks, and setmarks not written (the number filemarks or setmarks not transferred from the initiator plus the number of blocks, filemarks, and setmarks remaining in the target's buffer). Note that it is possible for the value in the information field to exceed the transfer length.

NOTE 157 The target should ensure that some additional data can be written to the medium (e.g. labels, filemarks, or setmarks) after the first early-warning indication has been returned to the initiator.

If a WRITE FILEMARKS command is received while the logical unit is positioned between early-warning and end-of-partition, the target shall return CHECK CONDITION status after attempting to perform the command. The EOM and valid bits shall be set to one in the sense data. If all filemarks or setmarks to be written are successfully transferred to the medium, the information field shall be set to zero. If any filemarks or setmarks to be written are not transferred to the medium prior to encountering end-of-partition, the sense key shall be set to VOLUME OVERFLOW and the information field shall be set to the requested transfer length minus the actual number of filemarks or setmarks written to the medium.

Copyright International Organization for Standardization
Provided by IHS under license with ISO
No reproduction or networking permitted without license from IHS Not for Resale

10.3 Parameters for sequential-access devices

10.3.1 Diagnostic parameters

This subclause defines the descriptors and pages for diagnostic parameters used with sequential-access devices.

The diagnostic page codes for sequential-access devices are defined in table 193.

Table 193 - Diagnostic page codes

Page code	Description	Subclause
00h	Supported diagnostic pages	8.3.1.1
01h - 3Fh	Reserved (for all device type pages)	
40h - 7Fh	Reserved	
80h - FFh	Vendor-specific pages	

10.3.2 Log parameters

This subclause defines the descriptors and pages for log parameters used with sequential-access devices.

The log page codes for sequential-access devices are defined in table 194.

Table 194 - Log page codes

Page code	Description	Subclause
01h	Buffer over-run/under-run page	8.3.2.1
02h	Error counter (write) page	8.3.2.2
03h	Error counter (read) page	8.3.2.2
04h	Error counter (read reverse) page	8.3.2.2
05h	Error counter (verify) page	8.3.2.2
07h	Last n error events page	8.3.2.3
06h	Non-media error page	8.3.2.4
00h	Supported log pages	8.3.2.5
08h - 2Fh	Reserved	
3Fh	Reserved	
30h - 3Eh	Vendor-specific	

10.3.3 Mode parameters

This subclause defines the descriptors and pages for mode parameters used with sequential-access devices.

The mode parameter list, including the mode parameter header and mode block descriptor, are described in 8.3.3.

The medium-type code field in the mode parameter header is reserved for sequential-access devices.

The device-specific parameter byte of the mode parameter header (see 8.3.3) is defined in table 195 for sequential-access devices.

Copyright International Organization for Standardization
Provided by IHS under license with ISO
No reproduction or networking permitted without license from IHS Not for Resale

Table 195 - Device-specific parameter

Bit	7	6	5	4	3	2	1	0
	WP	Buffered mode			Speed			

When used with the MODE SENSE command, a write protect (WP) bit of zero indicates that medium is write enabled. A WP bit of one indicates that the medium is write protected. When used with the MODE SELECT command, this field is not defined.

Values for the buffered mode field are defined in table 196.

Table 196 - Buffered modes

Code	Description
0h	The target shall not report GOOD status on write commands until the data blocks are actually written on the medium.
1h	The target may report GOOD status on write commands as soon as as all the data specified in the write command has been transferred to the target's buffer. One or more blocks may be buffered prior to writing the block(s) to the medium.
2h	The target may report GOOD status on write commands as soon as: a) All the data specified in the write command has been successfully transferred to the target's buffer, and b) All buffered data from different initiators has been successfully written to the medium.
3h - 7h	Reserved

Values for the speed field shall be assigned as defined in table 197.

Table 197 - Speed field definition

Code	Description
0h	Default (Use the peripheral device's default speed).
1h	Use the peripheral device's lowest speed.
2h - Fh	Use increasing peripheral device speeds.

For the MODE SELECT command, the density code field of the sequential-access device block descriptor (8.3.3) indicates the density selected by the initiator for use in subsequent read and write operations. For devices capable of automatic density recognition, the density code selected by the initiator may be overridden by the target for a subsequent read operation if the selected value does not match the current recorded density of the medium. If the MODE SELECT command specifies the default density code the device selects the actual density code to be used in a vendor-specific manner. The value is expected to be the principal density code (or an optimal density code).

For the MODE SENSE command, the density code field reflects the current operating density of the device. If a current operating density has not been selected, either because no medium is installed or because the density of the installed medium has not been determined, the density code field should be set to the principal density code value. The principal density code is the highest density code supported, the optimal density code supported, or the most common density code supported. In some devices, the principal density code value returned in

Copyright International Organization for Standardization
Provided by IHS under license with ISO
No reproduction or networking permitted without license from IHS Not for Resale

response to a MODE SENSE command may change dynamically to match the most recently selected density. The density code value returned in response to a MODE SENSE command shall be as described below:

a) Following a UNIT ATTENTION condition for a power on or hard reset condition, while not ready, the target shall report the principal density.
b) Following a UNIT ATTENTION condition for a not-ready-to-ready transition, the target shall:
   1) report the principal density if no attempt has been made by the target to determine the density;
   2) report the principal density if the target cannot automatically determine the density from the medium;
   3) report the current medium density if the target has determined the density from the medium.
c) Following a successful read operation at or after beginning-of-medium, the target shall report a density code value reflecting the recorded density of the medium. For some implementations, the target may automatically determine this value from the medium. For devices not capable of automatic density determination, the principal density is reported if the density code value is not provided by the preceding MODE SELECT command.
d) Following an unsuccessful read operation or a successful write operation, while at beginning-of-partition, the target shall:
   1) report a density code value as described for item b) if a previous MODE SELECT command has not established a density code for the currently mounted volume;
   2) report a density code value as provided by the last successful MODE SELECT command for the currently mounted volume.
e) Following a successful unload operation the target shall report the most recent density code value as determined by items b) through d) above.

Copyright International Organization for Standardization
Provided by IHS under license with ISO
No reproduction or networking permitted without license from IHS Not for Resale

Table 198 lists the sequential-access device density codes

Table 198 - Sequential-access density codes

Code value	Description							Note
00h	Default density (MODE SELECT command only)							
0Eh	Reserved for ECMA							
15h - 7Eh	Reserved							
7Fh	No change from previous density (NO-OP)							4
80h - FFh	Vendor-specific							
	Descriptions for magnetic tapes						Reference International Standard	
	Width	mm(in)	Tracks	Density	bpmm(bpi)	Code	Type	
01h	12,7	(0,5)	9	32	(800)	NRZI	R	1863:1990	2
02h	12,7	(0,5)	9	63	(1 600)	PE	R	3788:1990	2
03h	12,7	(0,5)	9	246	(6 250)	GCR	R	5652:1984	2
05h	6,3	(0,25)	4/9	315	(8 000)	GCR	C	8462-2:1986	1
06h	12,7	(0,5)	9	126	(3 200)	PE	R		2
07h	6,3	(0,25)	4	252	(6 400)	IMFM	C	8063-2:1986	1
08h	3,81	(0,15)	4	315	(8 000)	GCR	CS		1
09h	12,7	(0,5)	18	1 491	(37 871)	GCR	C		2
0Ah	12,7	(0,5)	22	262	(6 667)	MFM	C		1
0Bh	6,3	(0,25)	4	63	(1 600)	PE	C	4057:1986	1
0Ch	12,7	(0,5)	24	500	(12 690)	GCR	C		1
0Dh	12,7	(0,5)	24	999	(25 380)	GCR	C		1
0Fh	6,3	(0,25)	15	394	(10 000)	GCR	C		1
10h	6,3	(0,25)	18	394	(10 000)	GCR	C		1
11h	6,3	(0,25)	26	630	(16 000)	GCR	C		1
12h	6,3	(0,25)	30	2 034	(51 667)	RLL	C		1
13h	3,81	(0,15)	1	2 400	(61 000)	DDS	CS		3
14h	8,00	(0,315)	1	1 703	(43 245)	RLL	CS		3
15h	8,00	(0,315)	1	1 789	(45 434)	RLL	CS	ECMA TC17	3
16h	12,7	(0,5)	48	394	(10 000)	MFM	C		1
17h	12,7	(0,5)	48	1 673	(42 500)	MFM	C		1

Code	Description
NRZI	Non return to zero, change on ones
GCR	Group code recording
PE	Phase encoded
IMFM	Inverted modified frequency modulation
MFM	Modified frequency modulation
DDS	DAT data storage
RLL	Run length limited

Type	Description
R	Reel-to-reel
C	Cartridge
CS	Cassette

NOTES
1 Serial recorded.
2 Parallel recorded.
3 Helical scan
4 This density code value is defined for the MODE SELECT command and shall not be returned by the MODE SENSE command.

The mode page codes for sequential-access devices are defined in table 199.

Copyright International Organization for Standardization
Provided by IHS under license with ISO
No reproduction or networking permitted without license from IHS Not for Resale

Table 199 - Mode page codes

Page code	Description	Subclause
0Ah	Control mode page	8.3.3.1
10h	Device configuration page	10.3.3.1
02h	Disconnect-reconnect page	8.3.3.2
11h	Medium partition page(1)	10.3.3.2
12h	Medium partition page(2)	10.3.3.3
13h	Medium partition page(3)	10.3.3.3
14h	Medium partition page(4)	10.3.3.3
09h	Peripheral device page	8.3.3.3
01h	Read-write error recovery page	10.3.3.4
00h	Vendor-specific (does not require page format)	
03h - 08h	Reserved	
0Bh - 0Fh	Reserved	
15h - 3Eh	Vendor-specific (page format required)	
3Fh	Return all pages (valid only for the MODE SENSE command)	

10.3.3.1 Device configuration page

The device configuration page (see table 200) is used to specify the appropriate sequential-access device configuration.

Table 200 - Device configuration page

Bit / Byte	7	6	5	4	3	2	1	0
0	PS	Reserved	Page code (10h)					
1	Page length (0Eh)							
2	Reserved	CAP	CAF	Active format				
3	Active partition							
4	Write buffer full ratio							
5	Read buffer empty ratio							
6	(MSB) Write delay time							
7								(LSB)
8	DBR	BIS	RSmk	AVC	SOCF		RBO	REW
9	Gap size							
10	EOD defined			EEG	SEW	Reserved		
11	(MSB) Buffer size at early warning							
12								
13								(LSB)
14	Select data compression algorithm							
15	Reserved							

A change active partition (CAP) bit of one indicates that the logical partition is to be changed to the one specified by the active partition field. A CAP bit of zero indicates no partition change is specified.

Copyright International Organization for Standardization
Provided by IHS under license with ISO
No reproduction or networking permitted without license from IHS Not for Resale

A change active format (CAF) bit of one indicates that the active format is to be changed to the value specified in the active format field. A CAF bit of zero indicates no active format change is specified. For some devices, the format may only be changed when the logical unit is at beginning-of-partition.

The active format field indicates which recording format is in use for the selected density code when reading or writing data on a logical unit. The value of the active format field is vendor-specific.

The active partition field indicates the current logical partition number in use on the medium.

The write buffer full ratio, on WRITE commands, indicates to the target how full the buffer shall be before writing data to the medium. A value of zero indicates that the value is not specified.

The read buffer empty ratio, on READ commands, indicates to the target how empty the buffer shall be before retrieving additional data from the medium. A value of zero indicates that the value is not specified.

The write delay time indicates the maximum time, in 100 ms increments, that the target should wait before any buffered data that is to be written, is forced to the medium after the last buffered WRITE command that did not cause the buffer to exceed the buffer full ratio. A value of zero indicates that the target shall never force buffered data to the medium under these conditions.

A data buffer recovery (DBR) bit of one indicates that the target supports data buffer recovery using the RECOVER BUFFERED DATA command. A DBR bit of zero indicates that the target does not support data buffer recovery. This bit is target-defined.

A block identifiers supported (BIS) bit of zero indicates that block IDs are not supported in the format written on the medium. A BIS bit of one indicates that the format on the medium has recorded information about the block IDs relative to a partition. This bit is target-defined.

A report setmarks (RSmk) bit of one indicates that the target shall recognize and report setmarks during appropriate read or space operations. A RSmk bit of zero indicates that the target shall not report setmarks.

The automatic velocity control (AVC) bit of one, indicates that the device shall select the speed (if the device supports more than one speed) based on the data transfer rate that should optimize streaming activity and minimize medium repositioning. An AVC bit of zero indicates the speed chosen should be the device's default speed.

A stop on consecutive filemarks (SOCF) field of 00b indicates that the device shall pre-read data from the medium in buffered mode to the limits of the buffer capacity without regard for filemarks. This implies that the device can differentiate between data blocks and filemarks in the buffer. Values 01b, 10b, and 11b specify that the device shall terminate the pre-read operation if one, two, or three consecutive filemarks are detected, respectively. If the RSmk bit is one, the target shall interpret this field as stop on consecutive setmarks.

A recover buffer order (RBO) bit of one indicates that data blocks shall be returned from the target's buffer on a RECOVERED BUFFERED DATA command in LIFO order (last-in-first-out) from which they were written to the buffer. A RBO bit of zero indicates data blocks shall be returned in FIFO (first-in-first-out) order.

A report early-warning (REW) bit of zero indicates that the target shall not report the early-warning condition for read operations and it shall report early-warning at or before any medium-defined early-warning position during write operations.

A REW bit of one indicates that the target shall return CHECK CONDITION status with the EOM bit set in the sense data when the early-warning position is encountered during read and write operations. If the REW bit is one and the SEW bit is zero, the target shall return CHECK CONDITION status with the sense key set to VOLUME OVERFLOW when early-warning is encountered during write operations.

Copyright International Organization for Standardization
Provided by IHS under license with ISO
No reproduction or networking permitted without license from IHS Not for Resale

NOTE 158 A REW bit of one is intended for compatibility with those systems using old tape formats that require an early-warning indication during read operations. Other systems should set this bit to zero to avoid potential data loss when interchanging tapes between peripheral devices.

The GapSize field value determines the size of the inter-block gap when writing data. A value of 00h specifies the device's defined gap size. A value of 01h specifies a device defined gap size sufficiently long to support update-in-place. Values of 02h through 0Fh are multipliers on the device's defined gap size. Values 10h through 7Fh are reserved. Values 80h through FFh are vendor-specific.

The end-of-data (EOD) defined field indicates which format type the logical unit shall use to detect and generate the EOD area. The types of EOD formats are specified in table 201.

Table 201 - EOD formats

Value	Description
000b	Logical unit's default EOD definition
001b	Format-defined erased area of medium
010b	As specified in the SOCF field
011b	EOD recognition and generation is not supported
100b - 111b	Reserved

An enable EOD generation (EEG) bit set to one indicates that the logical unit shall generate the appropriate EOD area, as determined by the EOD defined field. A value of zero indicates that EOD generation is disabled.

NOTE 159 Some logical units may not generate EOD at the completion of any write-type operation.

The synchronize at early-warning (SEW) bit set to one indicates that the target shall cause any buffered write data, filemarks, or setmarks to be transferred to the medium when early-warning is encountered. A value of zero indicates that the target shall retain any unwritten buffered data, filemarks, or setmarks in the buffer when early-warning is encountered (see the WRITE command, 10.2.14, and the WRITE FILEMARKS command, 10.2.15).

The buffer size at early-warning field indicates the value, in bytes, to which the target shall reduce its logical buffer size when writing. The target should reduce the buffer size only when the logical unit is positioned between its early-warning and end-of-partition. A value of zero indicates that the implementation of this function is device specific.

NOTE 160 The intent is to prevent the loss of data by limiting the size of the buffer when near the end-of-partition.

The select data compression algorithm field set to 00h indicates that the target shall not use a compression algorithm on any data sent to it prior to writing the data to the medium. A value of 01h indicates that the data to be written shall be compressed using the target's default compression algorithm. Values 02h through 7Fh are reserved. Values 80h through FFh are vendor-specific.

Copyright International Organization for Standardization
Provided by IHS under license with ISO
No reproduction or networking permitted without license from IHS Not for Resale

10.3.3.2 Medium partition page(1)

The medium partition page(1) (see table 202) is used to specify the first group of medium partitions. Additional groups are specified in medium partition pages(2-4) (see 10.3.3.3).

Table 202 - Medium partition page(1)

Bit / Byte	7	6	5	4	3	2	1	0
0	PS	Reserved	Page code (11h)					
1	Page length							
2	Maximum additional partitions							
3	Additional partitions defined							
4	FDP	SDP	IDP	PSUM		Reserved		
5	Medium format recognition							
6	Reserved							
7	Reserved							
	Partition size descriptor(s)							
0	(MSB) Partition size							
1	(LSB)							

The maximum additional partitions field is a target-defined value indicating the maximum number of additional partitions supported by the logical unit. A value of zero indicates that no value is specified.

The additional partitions defined field specifies the number of additional partitions to be defined for a volume when the SDP or IDP bit is set to one. The maximum value allowed is the value returned in the maximum additional partitions field.

A fixed data partitions (FDP) bit of one indicates that the device assigns partitions based on its fixed definition of partitions. Setting this bit to one may only be valid at beginning-of-partition and is mutually exclusive with the SDP and IDP bits.

A select data partitions (SDP) bit of one indicates that the device is to partition the medium into the number of partitions as specified by the additional partitions defined field using partition sizes defined by the device. Setting this bit to one may only be valid at beginning-of-partition and it is mutually exclusive with the FDP and IDP fields.

An initiator-defined partitions (IDP) bit of one indicates that the initiator is defining the number and size of the data partitions using the additional partitions defined field and the partition size descriptors. Setting this bit to one may only be valid at beginning-of-partition and is mutually exclusive with the FDP and SDP fields.

NOTE 161 Since defining partitions may require reformatting the medium for some implementations, an implicit write to the medium may occur as a result of a MODE SELECT command that supplies any of these parameters.

Partition size unit of measure (PSUM) field defines the units in which the partition size descriptors select the partition size. The values 00b, 01b, and 10b define the units as bytes, kilobytes, and megabytes, respectively. The value 11b is reserved.

The medium format recognition field is a target-defined value indicating the device's capability to automatically identify the medium format and partition information when reading an unknown volume.

Copyright International Organization for Standardization
Provided by IHS under license with ISO
No reproduction or networking permitted without license from IHS Not for Resale

Values for the medium format recognition field shall be assigned as follows:

a) 00h Logical unit is incapable of format or partition recognition.
b) 01h Logical unit is capable of format recognition only.
c) 02h Logical unit is capable of partition recognition only.
d) 03h Logical unit is capable of format and partition recognition.
e) 04h - FFh Reserved.

NOTE 162 If a target indicates that it is not capable of medium format recognition, the initiator must supply all necessary parameters for the device to identify the specific format. The value in this field may be different following a medium change.

Partition size descriptors define the size of the respective partitions in the units specified in the PSUM field. Up to 64 partitions may be defined using this page. If additional partitions need to be defined, up to 64 partitions can be defined in each of the medium partition pages(2-4) defined in 10.3.3.3.

10.3.3.3 Medium partition page(2-4)

The medium partition page(2-4) (see table 203) is used to specify additional groups of medium partitions. The first group is specified in the medium partition page(1) (see 10.3.3.2).

Table 203 - Medium partition page(2-4)

Bit / Byte	7	6	5	4	3	2	1	0
0	PS	Reserved	Page code (12h, 13h, 14h)					
1	Page length							
	Partition size descriptor(s)							
0	(MSB) Partition size							
1	(LSB)							

The additional page codes defined for partition size definition are 12h, 13h, and 14h. Up to a maximum of 64 partitions can be defined in each of these pages. The partition size is defined by the value of the partition size field. The units of size used by the partition size field is specified in the PSUM field of the medium partition page(1) (see 10.3.3.2).

NOTE 163 Since defining partitions may require reformatting the medium for some implementations, an implicit write to the medium may occur as a result of a MODE SELECT command that supplies these parameters.

10.3.3.4 Read-write error recovery page

The read-write error recovery page (see table 204) specifies the error recovery and reporting parameters that the target shall use when transferring data between the initiator and the medium. These parameters only apply to read-write errors and do not affect message system retries or positioning error recovery procedures.

Copyright International Organization for Standardization
Provided by IHS under license with ISO
No reproduction or networking permitted without license from IHS Not for Resale

Table 204 - Read-write error recovery page

Bit / Byte	7	6	5	4	3	2	1	0
0	PS	Reserved	Page code (01h)					
1	Page length (0Ah)							
2	Reserved	Reserved	TB	Reserved	EER	PER	DTE	DCR
3	Read retry count							
4	Reserved							
5	Reserved							
6	Reserved							
7	Reserved							
8	Write retry count							
9	Reserved							
10	Reserved							
11	Reserved							
NOTE - The parameters in this page also apply to verify operations.								

A transfer block (TB) bit of one indicates that a data block that is not recoverable within the specified recovery limits shall be transferred to the initiator before CHECK CONDITION status is returned. A TB bit of zero indicates that the unrecoverable data block shall not be transferred to the initiator. Data blocks that can be recovered within the recovery limits are always transferred, regardless of the value of the TB bit.

An enable early recovery (EER) bit of one indicates that the target shall use the most expedient error recovery algorithm (e.g. attempt error correction prior to retries). An EER bit of zero indicates that the target shall use the most deliberate error recovery algorithm, within the limits established by the other error recovery parameters (e.g. attempt to recover the block error-free prior to using error correction).

A post error (PER) bit of one indicates that the target shall return CHECK CONDITION status to report recovered errors. A PER bit of zero indicates that the target shall not report errors recovered within the limits established by the error recovery parameters. If this bit is zero, the DTE bit must also be set to zero.

A disable transfer on error (DTE) bit of one indicates that the target shall terminate the data transfer after a recovered read-write error occurs. All data from the recovered block shall be transferred prior to terminating the read-write operation. A DTE bit of zero indicates that the target shall not terminate the transfer for errors recovered within the limits established by the read-write error recovery parameters.

A disable correction (DCR) bit of one indicates that the target shall not use error correction codes during error recovery. A DCR bit of zero allows the use of error correction codes for error recovery.

The read retry count specifies the number of times that the target should attempt its recovery algorithm during a read operation before an unrecoverable error is reported. A read retry count of zero indicates that the target shall not use its recovery algorithm during read operations.

The write retry count specifies the number of times that the target should attempt its recovery algorithm during a write operation before an unrecoverable error is reported. A write retry count of zero indicates that the target shall not use its recovery algorithm during write operations.

Copyright International Organization for Standardization
Provided by IHS under license with ISO
No reproduction or networking permitted without license from IHS Not for Resale

10.4 Definitions specific to sequential access devices

10.4.1 beginning-of-partition: The position at the beginning of the permissible recording region of a partition. If only one partition is defined, this position is typically equivalent to the beginning-of-medium.

10.4.2 beginning-of-medium: The extreme position along the medium in the direction away from the supply reel which can be accessed by the device.

10.4.3 buffered mode: A mode of data transfer in write operations which facilitates tape streaming (10.1.5), as reported in the mode parameter header device-specific parameter (10.3.3).

10.4.4 early-warning: A physical mark or device computed position near but logically before the end-of-partition (independent of physical direction). See the REW bit in the device configuration page in 10.3.3.1.

10.4.5 end-of-data: End of data in a partition is denoted in format-specific manner. See the EOD defined field in the device configuration page in 10.3.3.1.

10.4.6 end-of-medium: The extreme position along the medium in the direction away from the take-up reel which can be accessed by the device. This position may be accessed by devices that support the LOAD UNLOAD command with the EOT bit set to one.

10.4.7 end-of-partition: The position at the end of the permissible recording region of a partition.

10.4.8 filemark: A special recorded element within a partition, containing no user data, which provides a segmentation scheme.

10.4.9 overlength: The incorrect length condition that exists after executing a read command when the length of the actual block read exceeds the requested transfer length in the command descriptor block.

10.4.10 partition: The entire usable region of recording and reading paths in a volume or in a portion of a volume, defined in a device-specific manner. If there is more than one partition, they shall be numbered starting with zero (i.e. beginning-of-partition-zero).

10.4.11 setmark: A special recorded element within a partition, containing no user data, which provides a segmentation scheme hierarchically superior to filemarks for use in addressing or fast positioning on high capacity storage devices.

10.4.12 spacing: The act of positioning the medium on a sequential access device.

10.4.13 underlength: The incorrect length condition that exists after executing a read command when the requested transfer length in the command descriptor block exceeds the length of the actual block read.

10.4.14 volume: A recording medium together with its physical carrier.

Copyright International Organization for Standardization
Provided by IHS under license with ISO
No reproduction or networking permitted without license from IHS Not for Resale

11 Commands for printer devices

11.1 Model for printer devices

This command set includes capability for the printer-controlling device, that is an SCSI target to be is functionally separate from the physical printer device (see figure 27) as well as integrated with it. The physical printer device is connected to the SCSI target via one of several common device-level interfaces. There may be more than one physical printer device attached to the printer controlling device. In such a case, each physical printer device is assigned a separate logical unit number, beginning with zero. The printer-controlling device, printer device-level interface, and the physical printer device are referred to collectively as the printer device.

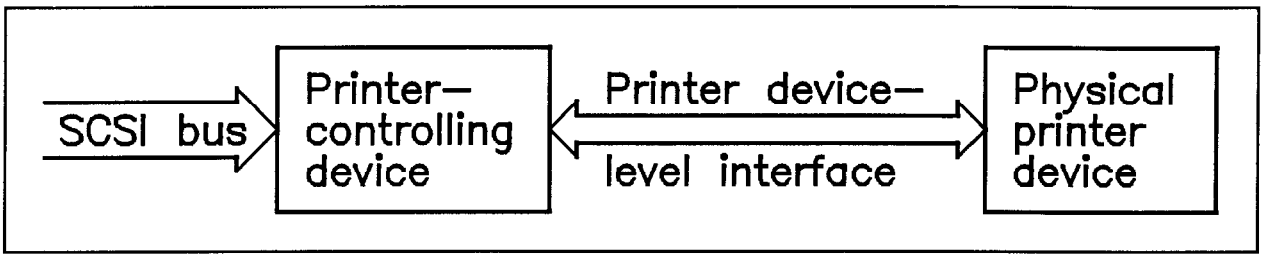

Figure 27 - SCSI printer model

Specific control mechanisms are defined in mode pages for two industry-standard interfaces known as the line printer interface (e.g. the Data Products interface or equivalent) and the EIA RS-232C interface. These mode pages are used to control optional features of these interfaces. No mode page was defined for the popular industry-standard parallel interface because the options requiring controls are embedded in the data.

The printer-controlling device may be integrated within the printer device; it is not required to use one of the industry-standard interfaces referenced above.

The printer device commands are structured on the assumption that specific printer control codes may be embedded in the data transferred by the FORMAT, PRINT, and SLEW AND PRINT commands. The transparent control codes may take the form of escape code sequences. commands for the operation of the target function and some printer controls, which are not convenient to handle in a transparent way, are specified in 11.2.

This International Standard does not specify which character set is used by the printer device; nor does it specify the meaning of the escape code sequences that may be used.

Copyright International Organization for Standardization
Provided by IHS under license with ISO
No reproduction or networking permitted without license from IHS Not for Resale

11.2 Commands for printer devices

The commands for printer devices shall be as shown in table 205.

Table 205 - Commands for printer devices

Command name	Operation code	Type	Subclause
CHANGE DEFINITION	40h	O	8.2.1
COMPARE	39h	O	8.2.2
COPY	18h	O	8.2.3
COPY AND VERIFY	3Ah	O	8.2.4
FORMAT	04h	O	11.2.1
INQUIRY	12h	M	8.2.5
LOG SELECT	4Ch	O	8.2.6
LOG SENSE	4Dh	O	8.2.7
MODE SELECT(06)	15h	O	8.2.8
MODE SELECT(10)	55h	O	8.2.9
MODE SENSE(06)	1Ah	O	8.2.10
MODE SENSE(10)	5Ah	O	8.2.11
PRINT	0Ah	M	11.2.2
READ BUFFER	3Ch	O	8.2.12
RECEIVE DIAGNOSTIC RESULTS	1Ch	O	8.2.13
RECOVER BUFFERED DATA	14h	O	11.2.3
RELEASE UNIT	17h	M	10.2.9
REQUEST SENSE	03h	M	8.2.14
RESERVE UNIT	16h	M	10.2.10
SEND DIAGNOSTIC	1Dh	M	8.2.15
SLEW AND PRINT	0Bh	O	11.2.4
STOP PRINT	1Bh	O	11.2.5
SYNCHRONIZE BUFFER	10h	O	11.2.6
TEST UNIT READY	00h	M	8.2.16
WRITE BUFFER	3Bh	O	8.2.17

Key: M = command implementation is mandatory.
O = command implementation is optional.

The following operation codes are vendor-specific: 01h, 02h, 05h, 06h, 07h, 08h, 09h, 0Ch, 0Dh, 0Eh, 0Fh, 11h, 13h, 19h, and C0h through FFh. All remaining operation codes for printer devices are reserved for future standardization.

Copyright International Organization for Standardization
Provided by IHS under license with ISO
No reproduction or networking permitted without license from IHS Not for Resale

11.2.1 FORMAT command

The FORMAT command (see table 206) provides a means for the initiator to specify forms or fonts to printers that support programmable forms or fonts. The format information is peripheral-device specific.

Table 206 - FORMAT command

Bit / Byte	7	6	5	4	3	2	1	0
0	Operation code (04h)							
1	Logical unit number			Reserved			Format type	
2	(MSB)							
3	Transfer length							
4								(LSB)
5	Control							

The format type field specifies the type of format information to be transferred from the initiator to the target. This field is defined in table 207.

Table 207 - Format type

Code	Format type
00b	Set form
01b	Set font
10b	Vendor-specific
11b	Reserved

The transfer length specifies the length in bytes of format information that shall be transferred during the DATA OUT phase. A transfer length of zero indicates that no format information shall be transferred. This condition shall not be considered as error.

Copyright International Organization for Standardization
Provided by IHS under license with ISO
No reproduction or networking permitted without license from IHS Not for Resale

11.2.2 PRINT command

The PRINT command (see table 208) transfers the specified number of bytes from the initiator to the target to be printed.

Table 208 - PRINT command

Bit / Byte	7	6	5	4	3	2	1	0
0	Operation code (0Ah)							
1	Logical unit number			Reserved				
2	(MSB)							
3	Transfer length							
4								(LSB)
5	Control							

The transfer length specifies the length in bytes of data that shall be transferred during the DATA OUT phase. A transfer length of zero indicates that no data shall be transferred. This condition shall not be considered as error.

11.2.3 RECOVER BUFFERED DATA command

The RECOVER BUFFERED DATA command (see table 209) returns to the initiator data that was transferred to the target, but not yet printed.

Table 209 - RECOVER BUFFERED DATA command

Bit / Byte	7	6	5	4	3	2	1	0
0	Operation code (14h)							
1	Logical unit number			Reserved				
2	(MSB)							
3	Transfer length							
4								(LSB)
5	Control							

This command is normally used only to recover from error or exception conditions that make it impossible to print the buffered data. The order in which data are transferred from the target to the initiator is the same as when the data were previously transferred using the PRINT command or SLEW AND PRINT command. Data transferred by this command are deleted from the target data buffer. One or more RECOVER BUFFERED DATA commands may be used to return the buffered data that is not printed.

If an attempt is made to recover more data than is contained in the buffer, the command shall be terminated with CHECK CONDITION status and the sense key shall be set to NO SENSE. In addition, the EOM, valid, and ILI bits shall be set to one. The information bytes shall be set to the difference (residue) between the transfer length and the actual number of bytes returned.

Copyright International Organization for Standardization
Provided by IHS under license with ISO
No reproduction or networking permitted without license from IHS Not for Resale

The transfer length specifies the maximum length in bytes of data that shall be transferred during the DATA IN phase. A transfer length of zero indicates that no data shall be transferred. This condition shall not be considered as error.

11.2.4 SLEW AND PRINT command

The SLEW AND PRINT command (see table 210) transfers the specified number of bytes from the initiator to the target to be printed. This command is provided for printer devices that do not support forms control information embedded within the print data.

Table 210 - SLEW AND PRINT command

Bit / Byte	7	6	5	4	3	2	1	0
0	Operation code (0Bh)							
1	Logical unit number			Reserved				Channel
2	Slew value							
3	(MSB)			Transfer length				
4								(LSB)
5	Control							

The transfer length specifies the length in bytes of data that shall be transferred during the DATA OUT phase. A transfer length of zero indicates that no data shall be transferred. This condition shall not be considered as error.

If the channel bit is zero, the slew value specifies the number of lines the form shall be advanced before printing. A value of 255 indicates that the form shall be advanced to the first line of the next form before printing. If the channel bit is one, the slew value specifies the forms control channel number to which the form shall be advanced prior to printing the data. If implemented, the printer options page in the MODE SELECT command provides additional control over the usage of the slew value field.

If the channel bit is one, and the channel option is not implemented, the command shall be terminated with CHECK CONDITION status and the sense key shall be set to ILLEGAL REQUEST.

Copyright International Organization for Standardization
Provided by IHS under license with ISO
No reproduction or networking permitted without license from IHS Not for Resale

11.2.5 STOP PRINT command

The STOP PRINT command (see table 211) requests that the target halt printing on buffered devices in an orderly fashion.

Table 211 - STOP PRINT command

Bit / Byte	7	6	5	4	3	2	1	0
0	Operation code (1Bh)							
1	Logical unit number			Reserved				Retain
2	Vendor-specific							
3	Reserved							
4	Reserved							
5	Control							

A retain bit of zero requests that the target data buffer be discarded; otherwise, the data not printed shall be retained. The data not printed may be recovered using the RECOVER BUFFERED DATA command, if implemented by the target. A subsequent SYNCHRONIZE BUFFER command, PRINT command, or SLEW AND PRINT command shall cause the remaining data not already printed to be printed, followed by the data transferred by the subsequent command, if any. The point at which printing is suspended by this command is vendor-specific.

11.2.6 SYNCHRONIZE BUFFER command

The SYNCHRONIZE BUFFER command (see table 212) provides a means for an initiator to ensure that the data have been printed successfully prior to releasing the peripheral device. This is useful for applications that handle any error or exception conditions (e.g. end-of-medium) prior to termination of the application.

Table 212 - SYNCHRONIZE BUFFER command

Bit / Byte	7	6	5	4	3	2	1	0
0	Operation code (10h)							
1	Logical unit number			Reserved				
2	Reserved							
3	Reserved							
4	Reserved							
5	Control							

When all buffered data are actually printed, the command shall be terminated with a GOOD status. If it is not possible to finish printing all of the buffered data (due to an error or exception condition on the peripheral device), then this command shall be terminated with a CHECK CONDITION status and the appropriate sense key.

The printer options page in the MODE SELECT command, if implemented, provides additional control over termination sequences when using this command.

Copyright International Organization for Standardization
Provided by IHS under license with ISO
No reproduction or networking permitted without license from IHS Not for Resale

11.3 Parameters for printer devices

11.3.1 Diagnostic parameters

This subclause defines the descriptors and pages for diagnostic parameters used with printer devices.

The diagnostic page codes for printer devices are defined in table 213.

Table 213 - Diagnostic page codes

Page code	Description	Subclause
00h	Supported diagnostic pages	8.3.1.1
01h - 3Fh	Reserved (for all device type pages)	
40h - 7Fh	Reserved	
80h - FFh	Vendor-specific pages	

11.3.2 Log parameters

This subclause defines the descriptors and pages for log parameters used with printer devices.

The log page codes for printer devices are defined in table 214.

Table 214 - Log page codes

Page code	Description	Subclause
01h	Buffer over-run/under-run page	8.3.2.1
07h	Last n error events page	8.3.2.3
06h	Non-medium error page	8.3.2.4
00h	Supported log pages	8.3.2.5
02h - 05h	Reserved	
08h - 2Fh	Reserved	
3Fh	Reserved	
30h - 3Eh	Vendor-specific pages	

11.3.3 Mode parameters

This subclause defines the descriptors and pages for mode parameters used with printer devices.

The mode parameter list, including the mode parameter header and mode block descriptor, are described in 8.3.3.

The medium-type code field is contained in the mode parameter header (see 8.3.3). This field is reserved for printer devices.

The device-specific parameter field is contained in the mode parameter header (see 8.3.3). Table 215 defines the device-specific parameter used for printer devices.

Table 215 - Printer device-specific parameter

Bit	7	6	5	4	3	2	1	0
	WP	Buffered mode			Reserved			

Copyright International Organization for Standardization
Provided by IHS under license with ISO
No reproduction or networking permitted without license from IHS Not for Resale

When using the MODE SELECT command, a buffered mode of zero indicates that the target shall not report a GOOD status on PRINT commands or SLEW AND PRINT commands until the data are actually printed. A buffered mode of one indicates that the target may report a GOOD status on PRINT commands or SLEW AND PRINT commands as soon as the data have been transferred to the SCSI device buffer. The data from one or more commands may be buffered prior to printing. Buffered modes of 2h through 7h are reserved.

When using the MODE SENSE command, the buffered mode field returns the current value of this parameter.

The density code field is contained in the mode parameter block descriptor (see table 93). This field is reserved for printer devices.

The mode page codes for printer devices are shown in table 216.

Table 216 - Mode page codes

Page code	Description	Subclause
0Ah	Control mode page	8.3.3.1
02h	Disconnect-reconnect page	8.3.3.2
03h	Parallel printer interface page	11.3.3.1
09h	Peripheral device page	8.3.3.3
05h	Printer options page	11.3.3.2
04h	Serial printer interface page	11.3.3.3
01h	Reserved	
06h - 08h	Reserved	
0Bh - 1Fh	Reserved	
00h	Vendor-specific (does not require page format)	
20h - 3Eh	Vendor-specific (page format required)	
3Fh	Return all pages (valid only for the MODE SENSE command)	

11.3.3.1 Parallel printer interface page

The parallel printer interface page (see table 217) is intended to support printer devices that use the industry-standard line printer interface.

Table 217 - Parallel printer interface

Bit / Byte	7	6	5	4	3	2	1	0
0	PS	Reserved	Page code (03h)					
1	Parameter length (03h)							
2	Parity select		PIPC	Reserved	VCBP	VCBS	VES	Autofd
3	Reserved							

The parameters savable (PS) bit is only used with the MODE SENSE command. This bit is reserved with the MODE SELECT command. A PS bit of one indicates that the target is capable of saving the page in a non-volatile, vendor-specific location.

The parity select field specifies parity generation on the printer interface is defined in table 218.

Copyright International Organization for Standardization
Provided by IHS under license with ISO
No reproduction or networking permitted without license from IHS Not for Resale

Table 218 - Parity select

Code	Parity select
00b	No parity generation
01b	Even parity
10b	Odd parity
11b	Reserved

A paper instruction parity check (PIPC) bit of one indicates that the printer interface Paper Instruction signal is included in parity generation on the printer interface by the target. A PIPC bit of zero indicates that the Paper Instruction signal is not included in parity generation on the printer interface by the target.

NOTES
164 The format of the vertical forms unit (VFU) control byte is specified by the VCBP, VCBS, and VES bits. The VFU control byte is not part of this International Standard; however, a discussion of it is included here for a better understanding. This VFU control byte (see table, below) includes a control bit (C) to select whether to slew over a number of lines or to skip to a vertical forms unit (VFU) channel number. This bit may be located in two different bit positions and may have either polarity.
165 The number of lines to slew over may be coded as an unsigned four-bit number (NNNN) or an unsigned six-bit number (EENNNN). The upper two bits of the six-bit number (EE) may be positioned contiguously with the lower four bits (NNNN) or they may be separated from the lower four bits by the control bit (C). Furthermore, the upper two bits may or may not be supported.
166 The VFU channel to select is specified by an unsigned four-bit number (NNNN) in the VFU control byte.
167 Pictorially, the control byte is shown in table 219.

Table 219 - VFU control byte

VFU control byte	Description
Bits 7 6 5 4 3 2 1 0	
0 E E C N N N N	Advance (EE)NNNN lines (C = line skip)
0 0 0 C N N N N	Skip to VFU channel NNNN (C = VFU channel)
0 C E E N N N N	Advance (EE)NNNN lines (C = line skip)
0 C 0 0 N N N N	Skip to VFU channel NNNN (C = VFU channel)
Key: C = VFU control bit	

A VFU control bit polarity (VCBP) bit of one indicates that the VFU control bit (C) is true for a VFU channel command and false for a line skip command. A VCBP bit of zero indicates the opposite polarity.

A VFU control bit select (VCBS) bit of one indicates that the control bit (C) is in bit position 6 and the EE bits are in bit positions 5 and 4. A VCBS bit of zero indicates that the control bit (C) is in bit position 4 and the EE bits are in bit positions 6 and 5.

A VFU extended skip (VES) bit of one indicates that the EE bits are supported for line skip operations. A VES bit of zero indicates that the EE bits are not supported.

For MODE SELECT, an automatic line feed (Autofd) bit of one specifies that the target assert the printer interface Auto Line Feed signal. An Autofd bit of zero specifies that the target negate the printer interface Auto Line Feed signal. For MODE SENSE, the target shall return the current value of this bit.

Copyright International Organization for Standardization
Provided by IHS under license with ISO
No reproduction or networking permitted without license from IHS Not for Resale

11.3.3.2 Printer options page

The printer options page (see table 220) supports control and reporting of various target functions and features.

Table 220 - Printer options

Bit / Byte	7	6	5	4	3	2	1	0
0	PS	Reserved	Page code (05h)					
1	Parameter length (0Ah)							
2	EVFU	Font identification						
3	Reserved		Slew mode		Reserved		SCTE	AFC
4	(MSB) Maximum line length							
5								(LSB)
6	EVFU format start character							
7	EVFU format stop character							
8	Line slew options				Form slew options			
9	Data termination options				Reserved			
10	Reserved							
11	Reserved							

The parameters savable (PS) bit is only used with the MODE SENSE command. This bit is reserved with the MODE SELECT command. A PS bit of one indicates that the target is capable of saving the page in a non-volatile vendor-specific location.

An electronic vertical forms unit (EVFU) bit of one indicates that a tape or electronic vertical forms unit is present in the printer device. An EVFU bit of zero indicates that the electronic vertical forms unit should not be used or that the unit is not present in the printer device.

For the MODE SELECT command, the font identification field specifies which font is to be used. For the MODE SENSE command, this field identifies the currently selected font. The font identification codes are defined in table 221.

Table 221 - Font identification

Code	Font identification
00h	Default font
01h - 3Fh	Reserved
40h - 7Fh	Vendor-specific font

For the MODE SELECT command, the slew mode field controls the target's behavior when a SLEW AND PRINT command is received with a channel bit of zero (see 11.2.4). For the MODE SENSE command, this field reports the current slew mode. This slew mode is defined in table 222.

Copyright International Organization for Standardization
Provided by IHS under license with ISO
No reproduction or networking permitted without license from IHS Not for Resale

Table 222 - Slew mode

Code	Slew mode
00b	SLEW AND PRINT commands with a channel bit of zero are supported without any required setup.
01b	SLEW AND PRINT commands with a channel bit of zero are only accepted after the initiator issues a FORMAT command with a format type of set form (to initialize the electronic vertical forms unit).
10b	SLEW AND PRINT commands with a channel bit of zero are always accepted. The target shall use the electronic vertical forms unit if it has previously been initialized or it shall initialize the electronic vertical forms unit for line skipping by sending the EVFU start format character immediately followed by the EVFU stop format character (both are defined below) prior to executing the SLEW AND PRINT command.
11b	Reserved

For the MODE SELECT command, a step count truncate enable (SCTE) bit of one indicates that the target shall assume the printer truncates slew values in SLEW AND PRINT commands, so that the data prints on the first line of the next form. A SCTE bit of zero indicates that the target shall assume the printer continues to slew over forms boundaries in SLEW AND PRINT commands if the slew value exceeds the number of remaining lines on the current form. The target shall return the current value of this field in the MODE SENSE data.

An ISO/IEC 646 forms control (AFC) bit of one indicates that the printer supports ISO/IEC 646 forms control characters. An AFC bit of zero indicates that the printer does not support ISO/IEC 646 forms control characters.

The maximum line length field specifies the maximum transfer length (maximum number of bytes per line) to be accepted in the SLEW AND PRINT command. A value of 0000h in MODE SELECT specifies that the target shall use its default value. In any case, the target shall report its actual value in the MODE SENSE data (not 0000h).

The EVFU format start character field specifies the character code to be used by the target to start the initialization of the electronic vertical forms unit, if slew mode option 10b is selected.

The EVFU format stop character field specifies the character code to be used by the target to stop the initialization of the electronic vertical forms unit, if slew mode option 10b is selected.

The line slew options field specifies the implementation of the line slew (using ISO/IEC 646 forms control characters) in the SLEW AND PRINT command. Code values in this field are defined in table 223.

--`,,```,,,,````-`-`,,`,,`,`,,`---

Copyright International Organization for Standardization
Provided by IHS under license with ISO
No reproduction or networking permitted without license from IHS Not for Resale

Table 223 - Line slew

Code	Line slew option
0h	Not implemented. (SLEW AND PRINT commands cause CHECK CONDITION status with ILLEGAL REQUEST sense key.)
1h	The target shall insert an ISO/IEC 646 carriage return character (0Dh) for each line to slew over.
2h	The target shall insert an ISO/IEC 646 line feed character (0Ah) for each line to slew over.
3h	The target shall insert an ISO/IEC 646 carriage return character (0Dh) and line feed character (0Ah) for each line to slew over.
4h - 7h	Reserved
8h - Fh	Vendor-specific

The form slew options field specifies the implementation of form slewing in the SLEW AND PRINT command. Code values in this field are defined in table 224.

Table 224 - Form slew

Code	Form slew option
0h	Not implemented. (SLEW AND PRINT commands cause CHECK CONDITION status with ILLEGAL REQUEST sense key.)
1h	The target shall insert an ISO/IEC 646 form feed character (0Ch) to move to the beginning of the next form.
2h	The target shall insert an ISO/IEC 646 carriage return character (0Dh) and form feed character (0Ch) to move to the beginning of the next form.
3h - 7h	Reserved
8h - Fh	Vendor-specific

The data termination options field specifies the termination sequence to be issued to the printer device when a SYNCHRONIZE BUFFER command is received. Code values for this field are defined in table 225.

Copyright International Organization for Standardization
Provided by IHS under license with ISO
No reproduction or networking permitted without license from IHS Not for Resale

Table 225 - Data termination option

Code	Line slew option
0h	Selects the target default implementation (MODE SELECT).
1h	No termination sequence. (The target sends any remaining data in its buffer to the printer device with no termination sequence.)
2h	The target shall print any buffered data followed by an ISO/IEC 646 carriage return character (0Dh).
3h	The target shall print any buffered data followed by an ISO/IEC 646 line feed character (0Ah).
4h	The target shall print any buffered data followed by an ISO/IEC 646 carriage return, line feed character sequence (0Dh, 0Ch).
5h	The target shall send any buffered data followed by an ISO/IEC 646 form feed character (0Ch).
6h	The target shall print any buffered data followed by an ISO/IEC 646 carriage return, form feed character sequence (0Dh, 0Ch).
7h	The target shall issue a zero line slew command to the printer device.
8h - Bh	Reserved
Ch - Fh	Vendor-specific

11.3.3.3 Serial printer interface page

The serial printer interface page (see table 226) is intended to support printer devices that use the industry-standard serial interface usually referred to as EIA RS-232C.

Table 226 - Serial printer interface

Bit / Byte	7	6	5	4	3	2	1	0
0	PS	Reserved	Page code (04h)					
1	Parameter length (06h)							
2	Reserved		Stop bit length					
3	Parity selection			Reserved	Bits per character			
4	RTS	CTS	Reserved		Pacing protocol			
5	(MSB)							
6	Baud rate							
7								(LSB)

The parameters savable (PS) bit is only used with the MODE SENSE command. This bit is reserved with the MODE SELECT command. A PS bit of one indicates that the target is capable of saving the page in a non-volatile vendor-specific location.

Copyright International Organization for Standardization
Provided by IHS under license with ISO
No reproduction or networking permitted without license from IHS Not for Resale

The stop bit length field specifies the length of the stop bit(s) in units of 1/16 bit. The target may round this field as described in 7.5.4. A stop bit length of zero in the MODE SELECT command indicates that the target shall use its default value.

The parity selection field specifies parity generation and checking as defined in table 227.

Table 227 - Parity selection

Code	Parity selection
000b	None
001b	Mark
010b	Space
011b	Odd
100b	Even
101b	Reserved
110b	Reserved
111b	Reserved

The bits per character field specifies the number of bits in each character. A value of zero in the MODE SELECT command indicates that the target shall use its default character size.

For the MODE SELECT command, a request to send (RTS) bit of one specifies that the target shall insure the Request to Send (RTS) signal in the serial interface follows the line state of the Data Terminal Ready (DTR) signal in the serial interface. A RTS bit of zero specifies that the target shall set the Request to Send (RTS) signal to high whenever the target power is on. For the MODE SENSE command, the target shall report the current value of this field.

For the MODE SELECT command, a clear to send (CTS) bit of one specifies that the target shall delay data transmission to the printer device until the printer device asserts the Clear to Send (CTS) signal in the serial interface. A CTS bit of zero indicates that the target shall ignore the Clear to Send signal. For the MODE SENSE command, the target shall report the current value of this field.

The code values for the pacing protocol field are defined in table 228.

Table 228 - Pacing protocol

Code	Pacing protocol
0h	None
1h	XON/XOFF
2h	ETX/ACK
3h	DTR
4h - 7h	Reserved
8h - Fh	Vendor-specific

The baud rate field specifies the baud rate in bits per second. The target may round this value as described in 7.5.4. A baud rate of zero in the MODE SELECT command specifies that the target shall use its default baud rate.

Copyright International Organization for Standardization
Provided by IHS under license with ISO
No reproduction or networking permitted without license from IHS Not for Resale

12 Processor devices

12.1 Model for processor devices

The SCSI processor device is a target with the characteristics of a primary computing device, typically a personal computer, minicomputer, mainframe computer, or auxiliary computing device or server. Such a primary computing device is often called a host. The processor device receives or provides packets of data as requested by the initiator.

In the SCSI processor device, the target accepts and provides the data packets transferred according to the commands of the initiator. The initiator and the processor device are both assumed to know the rules by which information is exchanged between them, how the information is interpreted by the processor device, and when it is allowable to exchange the information. These rules are not specified by this International Standard.

The initiator requests that the processor device accept a packet of data by transmitting a SEND command. The initiator requests that the processor device return a packet of data by transmitting a RECEIVE command. A COPY command can also be transmitted to the processor device to request that it serve as a copy manager. The actual data flow can be between the processor device and another SCSI device or can be between two SCSI devices under control of the processor device acting as a copy manager.

If a processor device temporarily has no resource available to manage a data packet from the initiator, has no data packet to provide to the initiator, or has no resources assigned to perform the operation, the device may then choose one of the following responses:

a) Terminate the command with CHECK CONDITION status and the sense key NOT READY with the appropriate additional sense code for the condition. This is the appropriate response to a TEST UNIT READY command.
b) Disconnect until the necessary resource or data packet becomes available, and then reconnect to the initiator and resume the operation.
c) Terminate the command with BUSY status.

More than one logical unit can be implemented by a processor device. Logical units can serve as additional paths to a single resource, and/or each logical unit can serve as a path to different resources within the device. A single logical unit may also serve as a path to multiple resources if the processor device can interpret information within the data packet and route the packet to the appropriate resource. If the logical unit addressed by the initiator does not have an available resource or data packet associated with it, the processor device may choose to treat the logical unit as an invalid logical unit (see 7.5.3) or respond as described in the previous paragraph.

If the processor device determines that an error or unusual condition has occurred while performing an operation specified by the contents of a data packet, the information describing the condition is normally returned as a part of a data packet. If the processor device determines that an error or unusual condition has occurred while executing the SCSI command from the initiator, the command is terminated with a CHECK CONDITION and the failures are identified through a REQUEST SENSE command.

The SCSI processor device is distinguished from a SCSI communications device by the fact that the primary destination of the data packets is within the target device. A SCSI communications device, in contrast, passes the data on to an ultimate destination outside the target through a network. Many types of devices may find it convenient to function as processor devices if no other suitable SCSI device type exists and if the packet exchange protocol dictated by the processor device model meets their functional requirements. Devices requiring totally incompatible protocols and command sets should be examined carefully to ensure that the incompatibilities are based on functional requirements. If they are, they should be treated as vendor-unique device types.

Copyright International Organization for Standardization
Provided by IHS under license with ISO
No reproduction or networking permitted without license from IHS Not for Resale

Several examples of processor device implementations are provided to clarify the range of utility of the SCSI processor device.

12.1.1 Host-to-host communication, SEND only

A host system, (host A), takes the initiator role and selects a processor device (host B), transmitting a packet to host B using the SEND command. The SEND command contains an operating system call that requests data from the local storage devices attached to host B. After performing the functions required by the data packet, host B assumes the initiator mode and selects host A as a processor device and uses a SEND command to transmit the requested data back to host A. Host A thus acts as a primary computer and host B acts as a specialized data server computer. Note that the SEND command is sufficient to perform a complete transaction if both host A and host B are capable of acting as initiators. This provides the capability of a high bandwidth inter-communication among nearby host processors.

12.1.2 Host-to-host communication, SEND and RECEIVE

A host system (host A) takes the initiator role and selects a processor device (host B), transmitting a packet using the SEND command to host B containing instructions about an operation to be performed. Host A again takes the initiator role and sends the data to be used by host B in the operation. Host A then assumes that a result will be obtained consistent with rules understood by both devices. Host A generates a RECEIVE command to obtain the result from host B. If the result is not yet ready, host B may disconnect until the calculation is complete and the requested data packet can be returned to host A.

NOTE 168 Host A need not support target mode and host B need not support initiator mode to successfully complete an exchange between the two devices.

12.1.3 Host-to-special-output peripheral

A special co-processor device which can use the processor device command set is a high-performance graphics display terminal. The initiator sends to the display terminal control and data packets that contain the image to be displayed. Only the SEND command is required. A peripheral failure should be indicated through the normal CHECK CONDITION / REQUEST SENSE protocol.

12.1.4 Host-to-special-input peripheral

A second special co-processor device that can use the processor device command set is a data acquisition subsystem. Such subsystems may multiplex and compact streams of data from many sources. A host could control the data acquisition modes and the selection of data streams by transmitting control packets to the processor device using the SEND command. The host could then obtain the acquired data by executing a series of RECEIVE commands. The data acquisition device could also serve as an initiator, selecting peripheral storage devices and storing the compacted acquired data there for later access directly by the host or through host to host communication protocols. A peripheral failure would be indicated through the normal CHECK CONDITION / REQUEST SENSE protocol.

Copyright International Organization for Standardization
Provided by IHS under license with ISO
No reproduction or networking permitted without license from IHS Not for Resale

12.2 Commands for processor devices

The commands for processor devices shall be as shown in table 229.

Table 229 - Commands for processor devices

Command name	Operation code	Type	Subclause
CHANGE DEFINITION	40h	O	8.2.1
COMPARE	39h	O	8.2.2
COPY	18h	O	8.2.3
COPY AND VERIFY	3Ah	O	8.2.4
INQUIRY	12h	M	8.2.5
LOG SELECT	4Ch	O	8.2.6
LOG SENSE	4Dh	O	8.2.7
READ BUFFER	3Ch	O	8.2.12
RECEIVE	08h	O	12.2.1
RECEIVE DIAGNOSTIC RESULTS	1Ch	O	8.2.13
REQUEST SENSE	03h	M	8.2.14
SEND	0Ah	M	12.2.2
SEND DIAGNOSTIC	1Dh	M	8.2.15
TEST UNIT READY	00h	M	8.2.16
WRITE BUFFER	3Bh	O	8.2.17
Key: M = command implementation is mandatory. O = command implementation is optional.			

The following operation codes are vendor-specific: 02h, 05h, 06h, 09h, 0Ch, 0Dh, 0Eh, 0Fh, 10h, 11h, 13h, 14h, 19h, C0h through FFh. All remaining operation codes for processor devices are reserved for future standardization.

12.2.1 RECEIVE command

The RECEIVE command (see table 230) requests that the target transfer data to the initiator. The contents of the data are not defined by this International Standard.

Table 230 - RECEIVE command

Bit / Byte	7	6	5	4	3	2	1	0
0	Operation code (08h)							
1	Logical unit number			Reserved				
2	(MSB)							
3	Allocation length							
4								(LSB)
5	Control							

Copyright International Organization for Standardization
Provided by IHS under license with ISO
No reproduction or networking permitted without license from IHS
Not for Resale

12.2.2 SEND command

The SEND command (see table 231) requests that the target transfer data from the initiator.

Table 231 - SEND command

Bit / Byte	7	6	5	4	3	2	1	0
0	Operation code (0Ah)							
1	Logical unit number			Reserved				AEN
2	(MSB)							
3	Transfer length							
4								(LSB)
5	Control							

An asynchronous event notification (AEN) bit of one indicates that the data to be transferred conforms to AEN data format as defined in table 232. A SEND command with an AEN bit of one shall be only issued to logical unit zero.

Table 232 - SEND command - AEN data format

Bit / Byte	7	6	5	4	3	2	1	0
0	Reserved		LUNTAR	Reserved		LUNTRN		
1	Reserved							
2	Reserved							
3	Reserved							
4	Sense data byte (0)							
n+4	Sense data byte (n)							

An AEN bit of zero indicates that the data to be transferred are vendor-specific.

The transfer length specifies the length in bytes of data that shall be sent during the DATA OUT phase. A transfer length of zero indicates that no data shall be sent. This condition shall not be considered an error.

A logical unit target (LUNTAR) bit of zero specifies that the asynchronous event occurred on a logical unit. A LUNTAR bit of one specifies that the asynchronous event occurred on a target routine.

If the LUNTAR bit is zero, the logical unit number target routine number (LUNTRN) field specifies the logical unit on which the asynchronous event occurred. If the LUNTAR bit is one, the LUNTRN field specifies on the target routine on which the asynchronous event occurred.

The sense data bytes are defined in table 65.

Copyright International Organization for Standardization
Provided by IHS under license with ISO
No reproduction or networking permitted without license from IHS Not for Resale

12.3 Parameters for processor devices

12.3.1 Diagnostic parameters

This subclause defines the descriptors and pages for diagnostic parameters used with processor devices.

The diagnostic page codes for processor devices are defined in table 233.

Table 233 - Diagnostic page codes

Page code	Description	Subclause
00h	List of supported parameters page	8.3.1.1
01h - 3Fh	Reserved (for all device type pages)	
40h - 7Fh	Reserved	
80h - FFh	Vendor-specific pages	

12.3.2 Log parameters

This subclause defines the descriptors and pages for log parameters used with processor devices.

The log page codes for processor devices are defined in table 234.

Table 234 - Log page codes

Page code	Description	Subclause
01h	Buffer over-run/under-run page	8.3.2.1
07h	Last n error events page	8.3.2.3
00h	List of supported parameters page	8.3.2.5
06h	Non-medium error page	8.3.2.4
02h - 05h	Reserved	
08h - 2Fh	Reserved	
30h - 3Eh	Vendor-specific pages	
3Fh	Reserved	

12.4 Definitions specific to processor devices

12.4.1 host: A device with the characteristics of a primary computing device, typically a personal computer, workstation, minicomputer, mainframe computer, or auxiliary computing device or server.

12.4.2 data packet: The data transferred during the DATA IN phase of a RECEIVE command, or during the DATA OUT phase of a SEND command. A data packet often contains information at the beginning or end of the packet that describes the contents of the packet. A data packet might contain control or status information for the destination device.

12.4.3 resource: A part of the device required to operate on or store the data packet.

Copyright International Organization for Standardization
Provided by IHS under license with ISO
No reproduction or networking permitted without license from IHS Not for Resale

13 Write-once devices

13.1 Model for write-once devices

The model for the write-once device is a variation on the optical memory model. Most of the aspects of a write-once device are similar to optical memory devices. The differences are summarized in this clause.

13.1.1 Logical blocks

Data may be written to a logical block only once. A subsequent write to a logical block already written may or may not be corrupted, depending on the implementation. Write-once physical media is non-volatile.

The updating of blocks (see 16.1) is discouraged. SCSI write-once devices are intended to be archival in nature. Data at a logical block address is not expected to change once it is written. The update commands are not defined for this device type. Devices are not precluded from implementing the update function by this International Standard, though devices that require the update function should use the optical memory device type.

Devices may be able to determine the state of a logical block prior to access. These devices can determine whether a block is blank or written. This is useful in detecting previously written blocks, and preventing a destructive overwrite. This is also useful in finding blank areas for later writing. The MEDIUM SCAN command can be used to find blank and written areas prior to WRITE and READ access.

13.1.2 Initialization

The FORMAT UNIT command is not defined for write-once devices. Write-once media is shipped pre-formatted by the manufacturer and is ready for use when mounted.

13.1.3 Physical medium defects

The raw defect rate is typically higher for optical medium than for magnetic medium. Data is usually recovered through the use of sophisticated error correction algorithms. The level of error correction used for data recovery is often can be selected. However, many write-once devices have a minimum level that is always used and cannot be de-selected through the error recovery mode parameter. Control of the error correction algorithms and level of correction is vendor-specific.

Defect management on write-once devices is usually vendor-specific. However, there are standards for some types of write-once media that specify defect management techniques. These standards, where they exist, may supersede the implementation requirements pertaining to error and defect reporting in this International Standard.

13.1.4 Error reporting

If any of the following conditions occur during the execution of a command the target shall return CHECK CONDITION status. The appropriate sense key and additional sense code should be set. The following list illustrates some error conditions and the applicable sense keys. The list does not provide an exhaustive enumeration of all conditions that may cause the CHECK CONDITION status.

Copyright International Organization for Standardization
Provided by IHS under license with ISO
No reproduction or networking permitted without license from IHS Not for Resale

Condition	Sense Key
Invalid logical block address	ILLEGAL REQUEST
Unsupported option requested	ILLEGAL REQUEST
Target reset or medium change since last command from this initiator	UNIT ATTENTION
Self diagnostic failed	HARDWARE ERROR
Unrecovered read error	MEDIUM ERROR HARDWARE ERROR
Recovered read error	RECOVERED ERROR
Overrun or other error that might be resolved by repeating the command	ABORTED COMMAND
Attempt to write on write protected medium	DATA PROTECT
Attempt to read a blank or previously unwritten block	BLANK CHECK
Attempt to write a previously written block and blank checking is enabled	BLANK CHECK

In the case of an invalid logical block address, the sense data information field shall be set to the logical block address of the first invalid address.

In the case of an attempt to read a blank or previously unwritten block, the sense data information field shall be set to the logical block address of the first blank block encountered. The data read up to that block shall be transferred.

In the case of an attempt to write a previously written block and blank checking is enabled, the sense information field shall be set to the logical block address of the first non-blank block encountered.

13.2 Commands for write-once devices

The commands for write-once devices shall be as shown in table 235.

Copyright International Organization for Standardization
Provided by IHS under license with ISO
No reproduction or networking permitted without license from IHS Not for Resale

Table 235 - Commands for write-once devices

Command name	Operation code	Type	Subclause
CHANGE DEFINITION	40h	O	8.2.1
COMPARE	39h	O	8.2.2
COPY	18h	O	8.2.3
COPY AND VERIFY	3Ah	O	8.2.4
INQUIRY	12h	M	8.2.5
LOCK UNLOCK CACHE	36h	O	9.2.2
LOG SELECT	4Ch	O	8.2.6
LOG SENSE	4Dh	O	8.2.7
MEDIUM SCAN	38h	O	16.2.3
MODE SELECT(06)	15h	O	8.2.8
MODE SELECT(10)	55h	O	8.2.9
MODE SENSE(06)	1Ah	O	8.2.10
MODE SENSE(10)	5Ah	O	8.2.11
PRE-FETCH	34h	O	9.2.3
PREVENT ALLOW MEDIUM REMOVAL	1Eh	O	9.2.4
READ(06)	08h	O	9.2.5
READ(10)	28h	M	9.2.6
READ(12)	A8h	O	16.2.4
READ BUFFER	3Ch	O	8.2.12
READ CAPACITY	25h	M	9.2.7
READ LONG	3Eh	O	9.2.9
REASSIGN BLOCKS	07h	O	9.2.10
RECEIVE DIAGNOSTIC RESULTS	1Ch	O	8.2.13
RELEASE	17h	M	9.2.11
REQUEST SENSE	03h	M	8.2.14
RESERVE	16h	M	9.2.12
REZERO UNIT	01h	O	9.2.13
SEARCH DATA EQUAL(10)	31h	O	9.2.14.1
SEARCH DATA EQUAL(12)	B1h	O	16.2.8
SEARCH DATA HIGH(10)	30h	O	9.2.14.2
SEARCH DATA HIGH(12)	B0h	O	16.2.8
SEARCH DATA LOW(10)	32h	O	9.2.14.3
SEARCH DATA LOW(12)	B2h	O	16.2.8
SEEK(06)	0Bh	O	9.2.15
SEEK(10)	2Bh	O	9.2.15
SEND DIAGNOSTIC	1Dh	M	8.2.15
SET LIMITS(10)	33h	O	9.2.16
SET LIMITS(12)	B3h	O	16.2.9
START STOP UNIT	1Bh	O	9.2.17
SYNCHRONIZE CACHE	35h	O	9.2.18
TEST UNIT READY	00h	M	8.2.16
VERIFY(10)	2Fh	O	16.2.11
VERIFY(12)	AFh	O	16.2.12
WRITE(06)	0Ah	O	9.2.20
WRITE(10)	2Ah	M	9.2.21
WRITE(12)	AAh	O	16.2.14
WRITE AND VERIFY(10)	2Eh	O	9.2.22
WRITE AND VERIFY(12)	AEh	O	16.2.16
WRITE BUFFER	3Bh	O	8.2.17
WRITE LONG	3Fh	O	9.2.23

Key: M = command implementation is mandatory.
O = command implementation is optional.

The following command codes are vendor-specific: 02h, 05h, 06h, 09h, 0Ch, 0Dh, 0Eh, 0Fh, 10h, 11h, 13h, 14h, 19h, 20h, 21h, 22h, 23h, 24h, 26h, 27h, 29h, and C0h through FFh. All remaining command codes for write-once devices are reserved for future standardization.

Copyright International Organization for Standardization
Provided by IHS under license with ISO
No reproduction or networking permitted without license from IHS Not for Resale

13.3 Parameters for write-once devices

Refer to the parameters for optical memory devices (see 16.3).

13.4 Definitions specific to write-once devices

See 16.4.

Copyright International Organization for Standardization
Provided by IHS under license with ISO
No reproduction or networking permitted without license from IHS Not for Resale

14 CD-ROM devices

14.1 Model for CD-ROM devices

CD-ROM devices permit reading data from a rotating media. Writing the media is not supported. Data transfer can begin with any of the consecutively numbered logical blocks. Data on CD-ROM devices are addressed the same as usual (magnetic) direct-access devices. Some CD-ROM devices support a separate information stream (e.g. audio and/or video but referred to as audio in this clause) transmitted via a connection other than the SCSI Bus. This device type defines commands for controlling these other information streams.

CD-ROM drives are designed to work with any disc that meets IEC. Many new drives read CD-ROM data discs, digital audio discs, and audio-combined discs (i.e. some tracks are audio, some tracks are data).

14.1.1 CD-ROM media organization

The formats written on the CD-ROM and CD-DA (Digital Audio) media require special interfacing considerations.

NOTE 169 This subclause contains a number of terms that have special meanings peculiar to CD-ROM technology or that may be unfamiliar to many readers of this International Standard. The glossary (see 14.4.) defines these terms.

Discs may contain either audio, data or a mixture of the two. Table 236 gives an example of a of a audio-combined disc to illustrate the relationship between the logical block addresses reported in SCSI and the MSF address encoded on the media. The logical addresses given in the table assume a block length of 2 048, 2 336 or 2 340 bytes. For block lengths of 1 024, 512 or 256 multiply all values given in the SCSI address columns by 2, 4 or 8 respectively.

NOTE 170 The term frame is used in two different ways in the CD-ROM media standard. The intended meaning can only be determined from the context. Whenever possible, this description replaces the larger data unit with the more familiar term sector. The primary exception to this policy is the use of frame when referring to the MSF address. In the MSF context, one frame (F field unit) equals one sector. On a typical two channel CD-DA media, each frame (F field unit) is played in 1/75th of a second.

Copyright International Organization for Standardization
Provided by IHS under license with ISO
No reproduction or networking permitted without license from IHS Not for Resale

Table 236 - Example mixed mode CD-ROM disc layout

	SCSI address		/—— Sub-channel information ——\					
Block description	Logical address (decimal)	Track relative logical address	Absolute MSF address[1]	Track and index	Track relative MSF address	Sector is info or is pause	Mode audio or data	CD-ROM data mode[2]
Lead-in area[3]	——	——	——	0/-	——	——	Audio	——
Pre-gap[3]	——	——	00/00/00	1/0	00/02/00	Pause	Data	Null
1st track data	0 000[5]	0	00/02/00[4]	1/1	00/00/00	Info	Data	L-EC
2nd track data	6 000[5]	0	01/22/00[4]	2/1	00/00/00	Info	Data	L-EC
	7 500	1 500	01/42/00	2/2	00/20/00	Info	Data	L-EC
Post-gap	9 000	3 000	02/02/00	2/3	00/40/00	Pause	Data	Null
Pause-silence	9 150	-150[9]	02/04/00	3/0	00/02/00[8]	Pause	Audio	——
3rd track audio	9 300[7]	0	02/04/00[6]	3/1	00/00/00	Info	Audio	——
	11 400	2 250	02/34/00	3/2	00/30/00	Info	Audio	——
4th track audio	21 975[7]	0	04/53/00[6]	4/1	00/00/00	Info	Audio	——
Pre-gap part 1	30 000	-225[9]	06/40/00	5/0	00/03/00	Pause	Audio	——
Pre-gap part 2	30 075	-150	06/41/00	5/0	00/02/00	Pause	Data	Null
5th track data	30 225	0	06/43/00	5/1	00/00/00	Info	Data	L-EC
Last information	263 999[10]	233 774	58/39/74	5/1	51/56/74	Info	Data	L-EC
Post-gap	——	233 775	58/40/00	5/2	51/57/00	Pause	Data	Null
Lead-out track	264 000[11]	0	58/42/00[12]	AA/[13]	00/00/00	Pause	Audio	——

Notes
1 Absolute MSF address repeated in the header field of data blocks.
2 The CD-ROM data mode is stored in the header of data tracks. This indicates that the block is part of a data pre-gap or post-gap (null), that this is a data block using the auxiliary field for L-EC symbols (ECC - CD-ROM data mode one), or that this is a data block using the auxiliary field for user data (CD-ROM data mode two).
3 Table of contents information is stored in the sub-channel of lead-in area. The lead-in area is coded as track zero. Track zero and the initial 150 sector pre--gap (or audio pause) are not accessible with logical addressing.
4 Value stored in table of contents with zero tolerance.
5 Exact value returned by READ TOC command.
6 Value stored in table of contents plus or minus 75 sectors.
7 Value returned by READ TOC command plus or minus 75 blocks.
8 Track relative MSF value decreases to 0 in pre-gap areas.
9 Track relative logical addresses are negative in the pre-gap areas. Pre-gap areas have index values of zero.
10 Minimum value returned by READ CD-ROM CAPACITY - exact value depends on encoding of this track and the lead out track and whether this is derived from the TOC data.
11 Value returned by READ TOC command - exact if lead-out track is encoded as data, or plus or minus 75 blocks if encoded as audio.
12 Value stored in table of contents - exact if lead-out track is coded as data, or plus or minus 75 blocks if coded as audio.
13 Lead-out track number is defined as 0AAh.

The physical format defined by the CD-ROM media standards provides 2 352 bytes per sector. For usual computer data applications, 2 048 bytes are used for user data, 12 bytes for a synchronization field, 4 bytes for a sector address tag field and 288 bytes - the auxiliary field - for L-EC (CD-ROM data mode 1). In less critical applications, the auxiliary field may also be used for user data (CD-ROM data mode 2). A CD-ROM physical sector size is 2 048, 2 336 or 2 340 bytes per sector. These values correspond to user data field only, user data plus auxiliary data, the 4 byte address tag plus user data plus auxiliary data.

Selection among these options is made by setting the density code field of the MODE SELECT block descriptor. The usual selection is 2 048 bytes per physical sector via a density code setting of 1. See the table of CD-ROM density code values in 14.3.3.

This same area of the CD-ROM or CD audio media may store 1/75th of a second of two channel audio information formatted according to the CD-DA specification. (These audio channels are usually the left and right

Copyright International Organization for Standardization
Provided by IHS under license with ISO
No reproduction or networking permitted without license from IHS Not for Resale

components of a stereo pair.) An audio only density code value can be used to declare an area of the media to be invalid for data operations.

For data and mixed mode media (those conforming to ISO/IEC 10149), logical block address zero shall be assigned to the block at MSF address 00/02/00. For audio media (those conforming only to IEC 908), logical block address zero should be assigned to the actual starting address of track 1. This may be approximated by using the starting address of track 1 contained in the table of contents (TOC) or by assigning logical block address zero to the block at MSF address 00/02/00.

Logical addressing of CD-ROM information may use any logical block length. When the specified logical block length is an exact divisor or integral multiple of the selected number of bytes per CD-ROM sector, the device shall map (one to one) the bytes transferred from CD-ROM sectors to the bytes of logical blocks. For instance, if 2 048 bytes are transferred from each CD-ROM sector (specified by the CD-ROM density code value), and the logical block length is 512 bytes, then each CD-ROM sector shall map to exactly four logical blocks. This International Standard does not define the mapping of logical block lengths which do not evenly divide or are not exact multiples of the selected number of bytes per CD-ROM sector.

A track may be viewed as a partition of the CD-ROM address space. A CD-ROM media contains from one to ninety-nine tracks. All information sectors of a track are required to be of the same type (audio or data) and mode. Each change in the type of information on the disc requires a change in track number. A disc containing both audio and data would have at least two tracks, one for audio and one for data.

The tracks of a CD media are numbered consecutively with values between 1 and 99. However, the first information track may have a number greater than 1. Tracks have a minimum length of 300 sectors including any transition area that is part of a track.

The CD-ROM media standards require transition areas between tracks encoded with different types of information. In addition, transition areas may be used at the beginning or end of any track. For audio tracks the transition areas are called pause areas. For data tracks, transition areas are called pre-gap and post-gap areas. See table 236 for an example. The IEC 908 and ISO/IEC 10149 standards specify minimum time durations for these areas. Maximum time durations are not specified.

Transition areas are formatted and the logical address continues to increment through transition areas. Some media (i.e. discs with only one track) may not have transition areas. The means to determine the location of the transition areas is vendor or application-specific and is addressed by other standards (e.g. ISO 9660).

CD-ROM is a unique SCSI device in the respect that some logical blocks on a disc may not be accessible by all commands. SEEK commands may be issued to any logical block address within the reported capacity of the disc. READ commands cannot be issued to logical blocks that occur in some transition areas, or to logical blocks within an audio track. PLAY commands cannot be issued to logical blocks within a data track.

The blank verify (BlkVfy) option of the verify command (see 16.2.11), for CD-ROM devices, shall verify that the addressed blocks are transition area blocks.

CD-ROM media have lead-in and lead-out areas. These areas are outside of the user-accessible area as reported in the READ CD-ROM CAPACITY data. The lead-in area of the media is designated track zero. The lead-out area is designated track 0AAh. The sub-channel Q in the lead-in track contains a table of contents (TOC) of the disc.

NOTE 171 The READ CD-ROM CAPACITY command returns the logical block address of the last block prior to the lead-out area. This location may be in a transition area and therefore not a valid address for read operations.

The table of contents gives the absolute MSF location of the first information sector of each track. Control information (audio/data, method of audio encoding, etc.) for each track is also given in the TOC. However, the TOC does not distinguish between the different modes of data tracks (i.e. CD-ROM data mode one vs. CD-ROM data mode two).

Copyright International Organization for Standardization
Provided by IHS under license with ISO
No reproduction or networking permitted without license from IHS Not for Resale

The MSF locations of the beginning of data tracks in the TOC are required to be accurate, however, the TOC values for audio tracks have a tolerance of plus or minus 75 sectors. Information from the TOC can be used to reply to a READ CD-ROM CAPACITY command. When this is done, the drive implementor should consider the possible tolerances and return a value that allows access to all information sectors.

An index is a partition of a track. Pre-gap areas are encoded with an index value of zero. Pause areas at the beginning of audio tracks are also encoded with an index value of zero. The first information sector of a track has an index value of one. Consecutive values up to 99 are permitted. Index information is not contained in the TOC. Not all sectors are encoded with the index value in the Q-sub-channel data (the requirement is 9 out of 10). A sector without an index value is presumed to have the same index as the preceding sector.

Tracks and indexes are not defined to be any particular length, (except for a minimum track length of 300 sectors.) A CD disc may be created with a single information track that has a single index; or with 99 information tracks, each with 99 indexes.

The sub-channel information which is part of each sector includes a track relative MSF location value giving the distance from the first information sector of the track. On the media, this value decreases during the pre-gap area (sectors with index values of 0) and increases for the rest of the track. The data, returned by the READ SUB-CHANNEL command with MSF bit set to zero, converts this to a track relative logical block address (TRLBA). The TRLBA is continually increasing over the whole track, and pre-gap areas shall return negative values. When the MSF bit in the READ SUB-CHANNEL command is set to one, the MSF track relative location value from the media is reported without change.

14.1.2 CD-ROM physical data format

The physical format of CD-ROM and CD-DA media uses a smaller unit of synchronization than the more familiar magnetic or optical recording systems. The basic data stream synchronization unit is a small frame. This is not the same large frame (sector) as referred to in the MSF unit. Each small frame consists of 588 bits. A sector on CD-ROM media consists of 98 small frames.

A CD-ROM small frame consists of:

a)	1 synchronization pattern	(24+3 bits)	
b)	1 byte of sub-channel data	(14+3 bits)	
c)	24 bytes of data	(24 x (14+3) bits)	
d)	8 bytes of CIRC code	(8 x (14+3) bits)	Total: 588 bits.

Data, sub-channel and CIRC bytes are encoded with an eight-to-fourteen bit code; then three merging bits are added. The merging bits are chosen to provide minimum low-frequency signal content and optimize phase lock loop performance.

14.1.2.1 Frame format for audio

Each small frame of an audio track on a two-channel CD-DA or CD-ROM media consists of six digitized 16-bit samples of each audio channel. These 24 bytes of data are combined with a synchronization pattern, CIRC bytes and a sub-channel byte to make a frame. Each frame takes approximately 136.05 μS to play. This gives a sampling rate of 44,1 khz for each channel. The sub-channel information creates the higher level sector grouping for audio tracks.

14.1.2.2 Sector format for data

The data bytes of 98 small frames comprise the physical unit of data referred to as a sector. (98 small frames times 24 bytes per small frame equal 2 352 bytes of data per sector.)

--`,,```,,,,````-`-`,,`,,`,`,,`---

Copyright International Organization for Standardization
Provided by IHS under license with ISO
No reproduction or networking permitted without license from IHS Not for Resale

A sector that contains CD-ROM data mode one data has the following format:

a) 12 bytes Synchronization field
b) 4 bytes CD-ROM data header
   Absolute M field in bcd format
   Absolute S field in bcd format
   Absolute F field in bcd format
   CD-ROM data mode field
c) 2048 bytes User data field
d) 4 bytes Error detection code
e) 8 bytes Zero
f) 276 bytes Layered error correction code

A sector that contains CD-ROM Data Mode two data has the following format:

a) 12 bytes Synchronization field
b) 4 bytes CD-ROM data header
   Absolute M field in bcd format
   Absolute S field in bcd format
   Absolute F field in bcd format
   CD-ROM data mode field
c) 2 336 bytes User data field (2048 bytes of mode 1 data
   plus 288 bytes of auxiliary data)

NOTE 172 Many drives are capable of returning CD-ROM data mode one data in a CD-ROM data mode two format. This allows the user to investigate the error detection and error correction codes. However data encoded as CD-ROM data mode two cannot be read as CD-ROM data mode one data.

14.1.2.3 Sub-channel information formats

The sub-channel byte of each frame is assigned one bit for each of the 8 sub-channels, designated P, Q, R, S, T, U, V, W. Only sub-channels P and Q are defined for CD-ROM media. The other sub-channel bits are zero.

Sub-channel P is a simple flag bit that may be used for audio muting control and track boundary determination.

Sub-channel Q has a higher level of structure. All the sub-channel Q bits of a sector define the sub-channel Q information block. (For audio tracks, decoding the Q sub-channel is the only way to distinguish sector boundaries.)

The sub-channel Q block consists of 98 bits, one bit from each small frame in a sector. Three formats are defined for the sub-channel Q information block. The first format provides location information and is defined as follows:

a) 2 bits Sub-channel synchronization field
b) 4 bits ADR field - defines the format
c) 4 bits Control field - defines the type of information in this sector
d) 8 bits Track number (in bcd)
e) 8 bits Index number (in bcd)
f) 24 bits Track relative MSF address
g) 8 bits Reserved (0)
h) 24 bits Absolute MSF address
i) 16 bits CRC error detection code

This format is required to exist in at least nine out of ten consecutive sectors.

--`,,```,,,,````-`-`,,`,,`,`,,`---

Copyright International Organization for Standardization
Provided by IHS under license with ISO
No reproduction or networking permitted without license from IHS Not for Resale

The second and third formats are optional. If used, they must exist in at least one out of 100 consecutive sectors. They include the absolute frame byte of the MSF address to provide location information continuity.

The second format gives the catalogue number of the disc (UPC/EAN bar code number). This information is constant over the whole media.

The third format gives the International Standard Recording Code (ISRC) for each track. The ISRC is defined in ISO 3901. This format is not present on lead-in or lead-out tracks and may change only after the track number changes.

14.1.3 CD Audio error reporting

PLAY AUDIO commands with the immediate bit set in the audio control mode return status as soon as the command has been validated (which may involve a seek to the starting address). The playback operation continues and may complete without notification to the initiator. Error termination of audio operations shall be reported to the initiator by returning immediate CHECK CONDITION status to the next command (except for REQUEST SENSE and INQUIRY.) The deferred error sense data (see 8.2.14.2.) is used to indicate that the error is not due to the current command.

The status of the play operation may be determined by issuing a REQUEST SENSE command. The sense key is set to NO SENSE and the audio status (see 14.2.10) is reported in the additional sense code qualifier field.

14.1.4 CD-ROM ready condition/not ready condition

The ready condition occurs after a cartridge is inserted and the drive has performed its initialization tasks. These may include reading the table of contents from the media.

A not ready condition may occur for the following reasons:

a) There is no cartridge inserted.
b) The drive is unable to load or unload the cartridge.
c) The drive is unable to recover the table of contents.
d) The controller cannot select the drive.

14.1.5 CD-ROM address reporting formats (MSF bit)

Several CD-ROM specific commands can report addresses either in logical or in MSF format (see table 237). The READ HEADER, READ SUB-CHANNEL and READ TABLE OF CONTENTS commands have this feature.

Table 237 - MSF address format

Bit / Byte	7	6	5	4	3	2	1	0
0	Reserved							
1	M field							
2	S field							
3	F field							

An MSF bit of zero requests that the logical block address format be used for the CD-ROM absolute address field or for the offset from the beginning of the current track expressed as a number of logical blocks in a CD-ROM track relative address field. This track relative logical block address (TRLBA) value is reported as a negative value in twos-complement notation for transition areas that have decreasing MSF encoded relative addresses.

Copyright International Organization for Standardization
Provided by IHS under license with ISO
No reproduction or networking permitted without license from IHS Not for Resale

An MSF bit of one requests that the MSF format be used for these fields. In certain transition areas, the relative MSF addresses are decreasing positive values. The absolute MSF addresses are always increasing positive values (see entry in 14.4).

The M, S, and F fields are expressed as binary numbers. The values match those on the media, except for the encoding. The ratios of M field units to S field units and S field units to F field units are reported in the mode parameters page (see 14.3.3).

14.1.6 Sensing support for CD-audio commands.

If any commands related to audio operations are implemented, then the PLAY AUDIO command shall be implemented to allow a method for the initiator to determine if audio operations are supported. A target responding to a PLAY AUDIO command which has a transfer length of zero, with CHECK CONDITION status, and setting the sense key to ILLEGAL REQUEST does not support audio play operations.

NOTE 173 The PLAY AUDIO command may be implemented without support for any of the other audio operations commands.

14.1.7 Error reporting

If any of the following conditions occur during the execution of a command, the target shall return CHECK CONDITION status. The appropriate sense key and additional sense code should be set. The following list illustrates some error conditions and the applicable sense keys. The list does not provide an exhaustive enumeration of all conditions that may cause the CHECK CONDITION status.

Condition	Sense Key
Invalid logical block address	ILLEGAL REQUEST
Unsupported option requested	ILLEGAL REQUEST
Target reset or medium change since last command from this initiator	UNIT ATTENTION
Self diagnostic failed	HARDWARE ERROR
Unrecovered read error	MEDIUM ERROR HARDWARE ERROR
Recovered read error	RECOVERED ERROR
Overrun or other error thhatmight be resolved by repeating the command	ABORTED COMMAND
Attempt to read a blank block	BLANK CHECK
Attempt to play a data block as audio	BLANK CHECK

In the case of an invalid logical block address, the sense data information field shall be set to the logical block address of the first invalid address.

In the case of an attempt to read a blank or previously unwritten block, the sense data information field shall be set to the logical block address of the first blank block encountered. The data read up to that block shall be transferred.

There are other special error situations for CD-ROM devices. In the following cases the sense key shall be set to BLANK CHECK and the additional sense code set to END OF USER AREA ENCOUNTERED ON THIS TRACK:

a) a post-gap area is encountered (i.e. a block with CD-ROM Data Mode 0);

Copyright International Organization for Standardization
Provided by IHS under license with ISO
No reproduction or networking permitted without license from IHS Not for Resale

b) a pre-gap area is encountered (i.e. a block with index equal to 0);
c) The information type (data vs. audio) changes.

When not performing audio playback, if the logical block address requested is not within a data track, the command shall be terminated with CHECK CONDITION status. The sense key shall be set to BLANK CHECK and the additional sense code set to ILLEGAL MODE FOR THIS TRACK. This applies to audio-combined and audio media.

14.2 Commands for CD-ROM devices

The commands for CD-ROM devices shall be as shown in table 238.

Table 238 - Commands for CD-ROM device

Command name	Operation code	Type	Subclause
CHANGE DEFINITION	40h	O	8.2.1
COMPARE	39h	O	8.2.2
COPY	18h	O	8.2.3
COPY AND VERIFY	3Ah	O	8.2.4
INQUIRY	12h	M	8.2.5
LOCK UNLOCK CACHE	36h	O	9.2.2
LOG SELECT	4Ch	O	8.2.6
LOG SENSE	4Dh	O	8.2.7
MODE SELECT(06)	15h	O	8.2.8
MODE SELECT(10)	55h	O	8.2.9
MODE SENSE(06)	1Ah	O	8.2.10
MODE SENSE(10)	5Ah	O	8.2.11
PAUSE RESUME	4Bh	O	14.2.1
PLAY AUDIO(10)	45h	O*	14.2.2
PLAY AUDIO(12)	A5h	O*	14.2.3
PLAY AUDIO MSF	47h	O*	14.2.4
PLAY AUDIO TRACK/INDEX	48h	O*	14.2.5
PLAY TRACK RELATIVE(10)	49h	O*	14.2.6
PLAY TRACK RELATIVE(12)	A9h	O*	14.2.7
PRE-FETCH	34h	O	9.2.3
PREVENT ALLOW MEDIUM REMOVAL	1Eh	O	9.2.4
READ(06)	08h	O	9.2.5
READ(10)	28h	M	9.2.6
READ(12)	A8h	O	16.2.4
READ BUFFER	3Ch	O	8.2.12
READ CD-ROM CAPACITY	25h	M	14.2.8
READ HEADER	44h	O	14.2.9
READ LONG	3Eh	O	9.2.9
READ SUB-CHANNEL	42h	O	14.2.10
READ TOC	43h	O	14.2.11
RECEIVE DIAGNOSTIC RESULTS	1Ch	O	8.2.13
RELEASE	17h	M	9.2.11
REQUEST SENSE	03h	M	8.2.14
RESERVE	16h	M	9.2.12
REZERO UNIT	01h	O	9.2.13
SEARCH DATA EQUAL(10)	31h	O	9.2.14.1
SEARCH DATA EQUAL(12)	B1h	O	16.2.8
SEARCH DATA HIGH(10)	30h	O	9.2.14.2
SEARCH DATA HIGH(12)	B0h	O	16.2.8
SEARCH DATA LOW(10)	32h	O	9.2.14.3
SEARCH DATA LOW(12)	B2h	O	16.2.8
SEEK(06)	0Bh	O	9.2.15
SEEK(10)	2Bh	O	9.2.15
SEND DIAGNOSTIC	1Dh	M	8.2.15
SET LIMITS(10)	33h	O	9.2.16
SET LIMITS(12)	B3h	O	16.2.9
START STOP UNIT	1Bh	O	9.2.17
SYNCHRONIZE CACHE	35h	O	9.2.18
TEST UNIT READY	00h	M	8.2.16
VERIFY(10)	2Fh	O	16.2.11
VERIFY(12)	Afh	O	16.2.12
WRITE BUFFER	3Bh	O	8.2.17

Key: M = command implementation is mandatory.
O = command implementation is optional.
* = indicates a PLAY AUDIO command

Copyright International Organization for Standardization
Provided by IHS under license with ISO
No reproduction or networking permitted without license from IHS Not for Resale

The following command codes are vendor-specific: 02h, 05h, 06h, 09h, 0Ch, 0Dh, 0Eh, 0Fh, 10h, 11h, 13h, 14h, 19h, 20h, 21h, 22h, 23h, 24h, 26h, 27h, 29h, and C0h through FFh. All remaining command codes for CD-ROM devices are reserved for future standardization.

If any of the PLAY AUDIO commands (indicated by an * in the type column) are implemented, the PLAY AUDIO command shall be implemented by the target.

14.2.1 PAUSE RESUME command

The PAUSE RESUME command (see table 239) requests that the device stop or start an audio play operation. This command is used with PLAY AUDIO commands issued while the immediate bit is set to one.

Table 239 - PAUSE RESUME command

Bit / Byte	7	6	5	4	3	2	1	0
0	Operation code (4Bh)							
1	Logical unit number			Reserved				
2	Reserved							
3	Reserved							
4	Reserved							
5	Reserved							
6	Reserved							
7	Reserved							
8	Reserved							Resume
9	Control							

A resume bit of zero causes the drive to enter the hold track state with the audio output muted after the current block is played. A resume bit of one causes the drive to release the pause and begin play at the block following the last block played.

If an audio play operation cannot be resumed and the resume bit is one, the command is terminated with CHECK CONDITION status. If the resume bit is zero and an audio play operation cannot be paused, (no audio play operation has been requested, or the requested audio play operation has been completed), the command is terminated with CHECK CONDITION status.

It shall not be considered an error to request a pause when a pause is already in effect, or to request a resume when a play operation is in progress.

--`,,```,,,,````-`-`,,`,,`,`,,`---

Copyright International Organization for Standardization
Provided by IHS under license with ISO
No reproduction or networking permitted without license from IHS Not for Resale

14.2.2 PLAY AUDIO(10) command

The PLAY AUDIO command (see table 240) requests that the target begin an audio playback operation. The command function (Immed and SOTC bits) and the output of audio signals shall be as specified by the settings of the mode parameters (see 14.3.3.1.).

Table 240 - PLAY AUDIO(10) command

Bit / Byte	7	6	5	4	3	2	1	0
0	Operation code (45h)							
1	Logical unit number			Reserved				RelAdr
2	(MSB)							
3				Starting logical block address				
4								
5								(LSB)
6	Reserved							
7	(MSB)							
8				Transfer length				(LSB)
9	Control							

If any commands related to audio operations are implemented then the PLAY AUDIO command shall be implemented to allow a method for the initiator to determine if audio operations are supported. A target responding to a PLAY AUDIO command that has a transfer length of zero with CHECK CONDITION status and setting the sense key to ILLEGAL REQUEST does not support audio play operations.

The logical block address field specifies the logical block at which the audio playback operation shall begin.

The transfer length field specifies the number of contiguous logical blocks that shall be played. A transfer length field of zero indicates that no audio operation shall occur. This condition shall not be considered an error.

If the logical block length is not equal to the sector size, the target may adjust the starting logical block address and the transfer length. In such case, it is recommended that the target start the audio play operation with the beginning of a sector whenever the starting logical address falls within that sector (MSF unit). If the requested transfer length causes the end of an audio play operation to fall within a sector, the target may continue the play operation through the end of that sector.

If the starting address is not found, if the address is not within an audio track, or if a not ready condition exists, the command shall be terminated with CHECK CONDITION status.

If the CD-ROM information type (data vs. audio) changes, the sense key shall be set to BLANK CHECK and the additional sense code set to END OF USER AREA ENCOUNTERED ON THIS TRACK.

If the logical block address requested is not within an audio track, the command shall be terminated with CHECK CONDITION status. The sense key shall be set to BLANK CHECK and the additional sense code set to ILLEGAL MODE FOR THIS TRACK.

--`,,```,,,,````-`-`,,`,,`,`,,`---

Copyright International Organization for Standardization
Provided by IHS under license with ISO
No reproduction or networking permitted without license from IHS Not for Resale

14.2.3 PLAY AUDIO(12) command

The PLAY AUDIO(12) command (see table 241) requests that the target to begin an audio playback operation. The command function (Immed and SOTC bits) and the output of audio signals shall be as specified by the settings of the mode parameters (see 14.3.3.1.). See the PLAY AUDIO(10) command for a description of the fields in this command.

Table 241 - PLAY AUDIO(12) command

Bit / Byte	7	6	5	4	3	2	1	0
0	Operation code (A5h)							
1	Logical unit number			Reserved				RelAdr
2	(MSB)							
3								
4	Logical block address							
5								(LSB)
6	(MSB)							
7								
8	Transfer length							
9								(LSB)
10	Reserved							
11	Control							

14.2.4 PLAY AUDIO MSF command

The PLAY AUDIO MSF command (see table 242) requests that the target to begin an audio playback operation. The command function (Immed and SOTC bits) and the output of audio signals shall be as specified by the settings of the mode parameters (see 14.3.3.1.).

Copyright International Organization for Standardization
Provided by IHS under license with ISO
No reproduction or networking permitted without license from IHS Not for Resale

Table 242 - PLAY AUDIO MSF command

Bit / Byte		6	5	4	3	2	1	0
0	Operation code (47h)							
1	Logical unit number			Reserved				
2	Reserved							
3	Starting M field							
4	Starting S field							
5	Starting F field							
6	Ending M field							
7	Ending S field							
8	Ending F field							
9	Control							

The starting M field, the starting S field, and the starting F field specify the absolute MSF address at which the audio play operation shall begin. The ending M field, the ending S field, and the ending F field specify the absolute MSF address where the audio play operation shall end. All contiguous audio sectors between the starting and the ending MSF address shall be played.

A starting MSF address equal to an ending MSF address causes no audio play operation to occur. This shall not be considered an error. If the starting MSF address is greater than the ending MSF address, the command shall be terminated with CHECK CONDITION status. The sense key shall be set to ILLEGAL REQUEST.

If the starting address is not found, if the address is not within an audio track, or if a not ready condition exists, the command shall be terminated with CHECK CONDITION status. See 14.1.7 for a description of error reporting information.

--`,,```,,,,````-`-`,,`,,`,`,,`---
Copyright International Organization for Standardization
Provided by IHS under license with ISO
No reproduction or networking permitted without license from IHS
Not for Resale

14.2.5 PLAY AUDIO TRACK INDEX command

The PLAY AUDIO TRACK INDEX command (see table 243) requests the target to begin an audio play operation. The command function (Immed and SOTC bits) and the output of audio signals shall be as specified by the settings of the mode parameters (see 14.3.3.1.).

Table 243 - PLAY AUDIO TRACK INDEX command

Bit / Byte	7	6	5	4	3	2	1	0
0	Operation code (48h)							
1	Logical unit number			Reserved				
2	Reserved							
3	Reserved							
4	Starting track							
5	Starting index							
6	Reserved							
7	Ending track							
8	Ending index							
9	Control							

The starting track field specifies the track number of the starting audio track. The starting index field specifies the index number within the track at which the audio play operation shall begin.

The ending track field specifies the track number of the ending audio track. The ending index field specifies the index number within the track after which the audio play operation shall stop. The audio play operation shall terminate at the last block with an index number equal to the ending index. All contiguous audio sectors between the starting and the ending address shall be played.

If the starting address is greater than the ending address, the command shall be terminated with CHECK CONDITION status. The sense key shall be set to ILLEGAL REQUEST.

If the starting address is not found, or if the address is not within an audio track, or if a not ready condition exists, the command shall be terminated with CHECK CONDITION status. See 14.1.7 for a description of error reporting information.

NOTE 174 Valid values for the track and index fields are 1 to 99. A starting index value of one specifies that playback is to start with the first audio sector of the track following the (optional) pause. A last index value of 99 specifies that playback continues through the last sector of the track.

If the ending track is greater than the last information track on the media, the playback shall continue until the last track is complete. If the ending index is greater than the largest index value on the ending track, the playback shall continue until this track is complete; then terminate. These conditions shall not be considered errors.

If the starting index is greater than the largest index value on the starting track, and the stop on track crossing (SOTC) bit of the audio control MODE SELECT parameters page (see 14.3.3.1) is zero, the playback operation shall start at the beginning of the next track. This situation is not an error.

Copyright International Organization for Standardization
Provided by IHS under license with ISO
No reproduction or networking permitted without license from IHS Not for Resale

If the starting index is greater than the largest index value on the starting track, and the stop on track crossing (SOTC) bit of the audio control MODE SELECT parameters page (see 14.3.3.1) is one, the playback shall not begin. The target shall return CHECK CONDITION, and the sense key shall be set to ILLEGAL REQUEST.

NOTE 175 The operation of the SOTC bit described above comes about because the user may not be able to determine the largest index value on a track, either from the table of contents or by other means. The SOTC bit one case allows the user to determine the largest index. The SOTC bit zero case allows the user to set up play operations without complete knowledge of the media layout.

14.2.6 PLAY AUDIO TRACK RELATIVE(10) command

The PLAY AUDIO TRACK RELATIVE(10) command (see table 244) requests that the device begin an audio playback operation. The starting address is specified as a track relative logical block address within the specified starting track. The command function (Immed and SOTC bits) and the output of audio signals shall be as specified by the settings of the mode parameters (see 14.3.3.1.).

Table 244 - PLAY AUDIO TRACK RELATIVE(10) command

Bit / Byte	7	6	5	4	3	2	1	0
0	Operation code (49h)							
1	Logical unit number			Reserved				
2	(MSB)							
3								
4	Track relative logical block address							
5								(LSB)
6	Starting track							
7	(MSB)							
8	Transfer length							(LSB)
9	Control							

The starting track field specifies the track number of the starting audio track.

The track relative logical block address (TRLBA) field specifies the two's complement starting logical block address relative to the beginning of the first sector on the track with an index value of one. Negative values indicate a starting location within the audio pause area at the beginning of the requested track.

The transfer length field specifies the number of contiguous logical blocks that shall be output as audio data. A transfer length field of zero indicates that no audio playback operation shall occur. This condition shall not be considered an error. Any other value indicates the number of logical blocks that shall be output.

If the logical block length is not equal to the sector size the target may adjust the starting logical block address and the transfer length. In such case, it is recommended that the target start the audio play operation with the beginning of a sector whenever the starting logical address falls within that sector (MSF unit). If the requested transfer length causes the end of an audio play operation to fall within a sector, the target may continue the play operation through the end of that sector.

If the starting address is not found, or if the address is not within an audio track, or if a not ready condition exists, the command is terminated with CHECK CONDITION status. See 14.1.7 for a description of error reporting information.

Copyright International Organization for Standardization
Provided by IHS under license with ISO
No reproduction or networking permitted without license from IHS Not for Resale

14.2.7 PLAY AUDIO TRACK RELATIVE(12) command

The PLAY AUDIO TRACK RELATIVE(12) command (see table 245) requests that the device begin an audio playback operation. The command function (Immed and SOTC bits) and the output of audio signals shall be as specified by the settings of the mode parameters (see 14.3.3.1.). See the PLAY AUDIO TRACK RELATIVE(10) command for a description of the fields in this command.

Table 245 - PLAY AUDIO TRACK RELATIVE(12) command

Bit / Byte	7	6	5	4	3	2	1	0
0	Operation code (A9h)							
1	Logical unit number			Reserved				
2	(MSB)							
3								
4	Track relative logical block address							
5								(LSB)
6	(MSB)							
7								
8	Transfer length							
9								(LSB)
10	Starting track							
11	Control							

14.2.8 READ CD-ROM CAPACITY command

The READ CD-ROM CAPACITY command (see table 246) provides a means for the initiator to request information regarding the capacity of the logical unit.

Table 246 - READ CD-ROM CAPACITY command

Bit / Byte	7	6	5	4	3	2	1	0
0	Operation code (25h)							
1	Logical unit number			Reserved				RelAdr
2	(MSB)							
3								
4	Logical block address							
5								(LSB)
6	Reserved							
7	Reserved							
8	Reserved							PMI
9	Control							

Copyright International Organization for Standardization
Provided by IHS under license with ISO
No reproduction or networking permitted without license from IHS Not for Resale

NOTE 176 This command has the same operation code (25h) as the READ CAPACITY command (see 9.2.7). The general function is the same but the exact definitions of the returned logical block address is modified to allow returning a possibly inexact value (but one with a known error bound) based on CD-ROM table of contents data. For many CD-ROM devices, this implementation allows a quicker response.

A partial medium indicator (PMI) bit of zero indicates that the information returned in the READ CD-ROM CAPACITY data shall be the logical block address and block length (in bytes) of the last valid logical block of the logical unit for seek operations. The logical block address returned shall be greater than or equal to the last readable or playable block. If greater, this address may be in a transition area beyond the last valid logical block for read or audio play operations. The value returned shall not be more than 75 sectors (MSF units) greater than the logical block address of the last readable or playable block. (This value arises because the CD-ROM table of contents lead-out track location has a +/- 75 sector tolerance when the lead-out track is encoded as an audio track.) The logical block address in the command descriptor block shall be set to zero for this option.

A PMI bit of one indicates that the information returned shall be the logical block address and block length (in bytes) of the last logical block address after which a substantial delay in data transfer will be encountered. This logical block address shall be greater than or equal to the logical block address specified in the command descriptor block. On CD-ROM media, this is interpreted as being the last readable or playable logical block of the information area containing or immediately following the specified logical block address.

NOTE 177 This option may take several seconds to complete on CD-ROM media.

See 9.1.10 for a description of the relative address bit (RelAdr).

Eight bytes of READ CD-ROM CAPACITY data (see table 247) shall be sent during the DATA IN phase of the command.

Table 247 - READ CAPACITY data format

Bit / Byte	7	6	5	4	3	2	1	0
0	(MSB)							
3				Logical block address				(LSB)
4	(MSB)							
7				Block length				(LSB)

Copyright International Organization for Standardization
Provided by IHS under license with ISO
No reproduction or networking permitted without license from IHS Not for Resale

14.2.9 READ HEADER command

The READ HEADER command (see table 248) requests that the device return the CD-ROM data block address header of the requested logical block.

Table 248 - READ HEADER command

Bit / Byte	7	6	5	4	3	2	1	0
0	Operation code (44h)							
1	Logical unit number			Reserved			MSF	Reserved
2	(MSB)							
3				Logical block address				
4								
5								(LSB)
6	Reserved							
7	(MSB)							
8				Allocation length				(LSB)
9	Control							

See 14.1.5. for a description of the MSF bit.

The logical block address field specifies the logical block at which the read header operation shall begin.

See the READ command for exception handling. If the logical block size is other than the physical block size, it shall be mapped into the appropriate physical block from which the data would have been read.

The READ HEADER data format (see table 249) defines the CD-ROM data block address header of the requested logical block.

Table 249 - READ HEADER data format

Bit / Byte	7	6	5	4	3	2	1	0
0	CD-ROM data mode							
1	Reserved							
2	Reserved							
3	Reserved							
4	(MSB)							
7				Absolute CD-ROM address				(LSB)

The CD-ROM data mode field specifies the CD-ROM data mode of the logical blocks in this sector of data. The values in this field are defined in table 250.

Copyright International Organization for Standardization
Provided by IHS under license with ISO
No reproduction or networking permitted without license from IHS Not for Resale

Table 250 - CD-ROM data mode codes

CD-ROM mode	User data field contents (2 048 bytes)	Auxiliary field contents (288 bytes)
00h	All bytes zero	All bytes zero
01h	User data	L-EC symbols
02h	User data	User data
03h - FFh	Reserved	Reserved

If the MSF bit is zero, the absolute address field gives the logical block address of the first logical block in the physical sector where the data for the requested logical block address is found. If the MSF bit is one, the absolute address field gives the MSF address of the sector where the data for the requested logical block address is found. (See 14.1.5.)

14.2.10 READ SUB-CHANNEL command

The READ SUB-CHANNEL command (see table 251) requests that the target return the requested sub-channel data plus the state of audio play operations.

Table 251 - READ SUB-CHANNEL command

Bit / Byte	7	6	5	4	3	2	1	0
0	Operation code (42h)							
1	Logical unit number			Reserved			MSF	Reserved
2	Reserved	SubQ	Reserved					
3	Sub-channel data format							
4	Reserved							
5	Reserved							
6	Track number							
7	(MSB) Allocation length							
8	(LSB)							
9	Control							

NOTE 178 Sub-channel data returned by this command may be from the last appropriate sector encountered by a current or previous media accessing operation. When there is no current audio play operation, the target may access the media to read the sub-channel data. The target is responsible that the data returned are current and consistent. For example with sub-channel data format 0, the International Standard Recording Code (ISRC) data reported must have been read from the same track as the reported current position data.

See 14.1.5. for a description of the MSF bit.

The subQ bit set to one requests that the target return the Q sub-channel data. The subQ bit set to zero requests that no sub-channel data be returned. This shall not be considered an error.

NOTE 179 The other bits in this byte are reserved for future standardization when they may be defined to request other sub-channel data.

The sub-channel data format field specifies the returned sub-channel data (see table 252). If this field is 00h, sub-Q channel data is returned. If this field is 01h, 02h or 03h, the requested sub-Q data item is returned.

Copyright International Organization for Standardization
Provided by IHS under license with ISO
No reproduction or networking permitted without license from IHS Not for Resale

Table 252 - Sub-channel data format codes

Format Code	Returned data
00h	Sub-Q channel data
01h	CD-ROM current position
02h	Media catalogue number (UPC/bar code)
03h	Track international standard recording code (ISRC)
04h - EFh	Reserved
F0h - FFh	Vendor-specific

The track number field specifies the track from which ISRC data is read. This field must have a value between 01h and 63h (99bcd), and is valid only when the sub-channel data format field is 03h. In this case, the target returns ISRC data for this track.

14.2.10.1 Sub-Q channel data format

The sub-channel command data formats consist of a four-byte header followed by a sub-channel data block. The header contains the audio status byte and the sub-channel data length field. If the subQ bit is zero, the target shall not return the sub-channel data block; in this case, the sub-channel data length is zero.

Table 253 defines the sub-Q channel data format.

Copyright International Organization for Standardization
Provided by IHS under license with ISO
No reproduction or networking permitted without license from IHS Not for Resale

Table 253 - Sub-Q channel data format

Bit / Byte	7	6	5	4	3	2	1	0
	Sub-channel data header							
0	Reserved							
1	Audio status							
2	(MSB) Sub-channel data length							
3	(LSB)							
	Sub-Q channel data block							
4	Sub-channel data format code (00h)							
5	ADR				Control			
6	Track number							
7	Index number							
8	(MSB) Absolute CD-ROM address							
11	(LSB)							
12	(MSB) Track relative CD-ROM address							
15	(LSB)							
16	MCVal	Reserved						
17	(MSB) Media catalogue number (UPC/Bar code)							
31	(LSB)							
32	TCVal	Reserved						
33	(MSB) Track international standard recording code (ISRC)							
47	(LSB)							

The audio status field indicates the status of audio play operations. The audio status values are defined in table 254. Audio status values greater than zero are returned only to the initiator that requested the last audio play operation. Audio status values 13h and 14h return information on previous audio operations; they are returned only once after the condition has occurred. If another audio play operation is not requested, the audio status returned for subsequent READ SUB-CHANNEL commands is 15h.

Table 254 - Audio status codes

Status	Description
00h	Audio status byte not supported or not valid
11h	Audio play operation in progress
12h	Audio play operation paused
13h	Audio play operation successfully completed
14h	Audio play operation stopped due to error
15h	No current audio status to return

The sub-channel data length specifies the length in bytes of the following sub-channel data block. A sub-channel data length of zero indicates that no sub-channel data block is included in the returned data.

Copyright International Organization for Standardization
Provided by IHS under license with ISO
No reproduction or networking permitted without license from IHS Not for Resale

NOTE 180 Usual values for sub-channel data length are 0, 12, 20, 28 and 44 bytes. Sub-channel data length does not include the sub-channel header.

The sub-Q channel data block consists of control data (bytes 4-5), current position data (bytes 6 - 15) and identification data (bytes 16 - 47). The control data and current position data is obtained from the Q sub-channel information of the current block. Identification data may be reported that was obtained from a previous block. If identification data is reported, the data shall be valid for the sector addressed by the current position data.

a) If an audio play operation is proceeding in the background, position data for the last sector played shall be reported.
b) In other cases, for instance after a READ command, the target may either report position data for the last sector processed for that operation or may report position data from the sector at the current read head position.

NOTE 181 When the type of information encoded in the Q sub-channel of the current sector is the media catalog number or ISRC; the track, index, and address fields should be extrapolated from the previous sector.

The ADR field gives the type of information encoded in the Q sub-channel of this block, as shown in table 255.

Table 255 - ADR sub-channel Q field

ADR code	Description
0h	Sub-channel Q mode information not supplied
1h	Sub-channel Q encodes current position data (i.e. track, index, absolute address, relative address)
2h	Sub-channel Q encodes media catalogue number
3h	Sub-channel Q encodes ISRC
4h - Fh	Reserved

The control bits are defined in table 256.

Table 256 - Sub-channel Q control bits

Bit	Equals zero	Equals one
0	Audio without pre-emphasis	Audio with pre-emphasis
1	Digital copy prohibited	Digital copy permitted
2	Audio track	Data track
3	Two-channel audio	Four-channel audio

The track number specifies the current track number.

The index number specifies the index number in the current track.

The absolute CD-ROM address field gives the current location relative to the logical beginning of the media. If the MSF bit is zero, this field is a logical block address. If the MSF bit is one, this field is an absolute MSF address. (See 14.1.5.)

The track relative CD-ROM address field gives the current location relative to the logical beginning of the current track. If the MSF bit is zero, this field is a track relative logical block address. (If the current block is in the pre-gap area of a track, this will be a negative value, expressed as a twos-complement number. See 14.1.5). If the MSF bit is one, this field is the relative MSF address from the Q sub-channel.

Copyright International Organization for Standardization
Provided by IHS under license with ISO
No reproduction or networking permitted without license from IHS Not for Resale

A media catalogue valid (MCVal) bit of one indicates that the media catalogue number field is valid. A MCVal bit of zero indicates that the media catalogue number field is not valid.

The media catalogue number field contains the identifying number of this media according to the uniform product code values (UPC/EAN bar coding) expressed in ISO/IEC 646 characters. Non-zero values in this field are controlled by the Uniform Product Code Council[1)] and the European Article Number Council[2)]. A value in this field of all ISO/IEC 646 zeros indicates that the media catalog number is not supplied.

The track code valid (TCVal) bit of one indicates that the track ISRC field is valid. A TCVal bit of zero indicates that the track international standard recording code (ISRC) field is not valid.

The track ISRC field contains the identifying number of this media according to the ISRC standards (ISO 3901:1986 *International standard recording code* (ISRC)) expressed in ISO/IEC 646 characters.

---

1) The Uniform Product Code Council is located at 8163 Old Yankee Road, Suite J, Dayton, Ohio 45459.
2) The European Article Number Council is located at Rue des Colonies, 54-BTE8, 1000 Brussels, Belgium.

Copyright International Organization for Standardization
Provided by IHS under license with ISO
No reproduction or networking permitted without license from IHS Not for Resale

14.2.10.2 CD-ROM current position data format

Table 257 defines the CD-ROM current position data format.

Table 257 - CD-ROM current position data format

Bit / Byte	7	6	5	4	3	2	1	0
	Sub-channel data header							
0	Reserved							
1	Audio status							
2	(MSB) Sub-channel data length							
3	(LSB)							
	CD-ROM current position data block							
4	Sub-channel data format code (01h)							
5	ADR				Control			
6	Track number							
7	Index number							
8	(MSB) Absolute CD-ROM address							
11	(LSB)							
12	(MSB) Track relative CD-ROM address							
15	(LSB)							

14.2.10.3 Media catalogue number data format

Table 258 defines the media catalogue number data format.

Copyright International Organization for Standardization
Provided by IHS under license with ISO
No reproduction or networking permitted without license from IHS Not for Resale

Table 258 - Media catalogue number data format

Bit / Byte	7	6	5	4	3	2	1	0
	Sub-channel data header							
0	Reserved							
1	Audio status							
2	(MSB) Sub-channel data length							
3								(LSB)
	Media catalogue number data block							
4	Sub-channel data format code (02h)							
5	Reserved							
6	Reserved							
7	Reserved							
8	MCVal	Reserved						
9	(MSB) Media catalogue number (UPC/EAN bar code)							
23								(LSB)

If media catalogue number data is found, the MCVal bit is set to one. If MCN data is not detected, the MCVal bit is set to zero to indicate the media catalogue number field is invalid.

NOTE 182 Media catalogue number data returned by this command with sub-channel data format field code 02h may be from any block that has UPC/EAN bar code Q sub-channel data. (This code is constant anywhere in every applicable disc.)

14.2.10.4 Track international standard recording code data format

Table 259 defines the track international standard recording code data format.

Copyright International Organization for Standardization
Provided by IHS under license with ISO
No reproduction or networking permitted without license from IHS Not for Resale

Table 259 - Track international standard recording code data format

Bit / Byte	7	6	5	4	3	2	1	0
	Sub-channel data header							
0	Reserved							
1	Audio status							
2	(MSB) Sub-channel data length							
3	(LSB)							
	Track ISRC data block							
4	Sub-channel data format code (03h)							
5	ADR				Control			
6	Track number							
7	Reserved							
8	TCVal	Reserved						
9	(MSB) Track international standard recording code (ISRC)							
23	(LSB)							

If ISRC data is detected, the TCVal bit is set to one. If ISRC data is not detected, the TCVal bit is set to zero to indicate the ISRC field is invalid.

NOTE 183 Track ISRC data returned by this command with sub-channel data format field 03h may be from any block in the specified track that has ISRC data.

Copyright International Organization for Standardization
Provided by IHS under license with ISO
No reproduction or networking permitted without license from IHS Not for Resale

14.2.11 READ TOC command

The READ TOC command (see table 260) requests that the target transfers data from the table of contents to the initiator.

Table 260 - READ TOC command

Bit / Byte	7	6	5	4	3	2	1	0
0	Operation code (43h)							
1	Logical unit number			Reserved			MSF	Reserved
2	Reserved							
3	Reserved							
4	Reserved							
5	Reserved							
6	Starting track							
7	(MSB)			Allocation length				
8								(LSB)
9	Control							

See 14.1.5. for a description of the MSF bit.

The starting track field specifies the starting track number for which the data shall be returned. If this value is zero, the table of contents data shall begin with the first track on the medium. The data are returned in contiguous ascending track number order.

If the starting track field is not valid for the currently installed medium, the command shall be terminated with CHECK CONDITION status. The sense key shall be set to ILLEGAL REQUEST and the additional sense code set to INVALID FIELD IN CDB.

NOTE 184 The maximum TOC data length possible on currently available CD-ROM media is 804 bytes, or 100 TOC track descriptors.

The format of the data returned is specified in table 261.

Copyright International Organization for Standardization
Provided by IHS under license with ISO
No reproduction or networking permitted without license from IHS Not for Resale

Table 261 - READ TOC data format

Bit / Byte	7	6	5	4	3	2	1	0
0	(MSB)			TOC data length				
1								(LSB)
2	First track number							
3	Last track number							
	TOC track descriptor(s)							
0	Reserved							
1	ADR				Control			
2	Track number							
3	Reserved							
4	(MSB)			Absolute CD-ROM address				
7								(LSB)

The TOC data block contains a four-byte header followed by zero or more TOC track descriptors.

The TOC data length specifies the length in bytes of the following TOC data that is available to be transferred during the DATA IN phase. The TOC data length value does not include the TOC data length field itself.

The first track number field indicates the first track number in the table of contents.

The last track number field indicates the last track number in the table of contents before the lead-out track number.

NOTE 185 The first track number is not required to be one. A disc may start at any valid track number. The track numbers between the first track number and the last track number are required to be in contiguous ascending order, except for the lead-out track.

The ADR field gives the type of information encoded in the Q sub-channel of the block where this TOC entry was found. The possible ADR values are defined in 14.2.10.1.

The control field indicates the attributes of the track. The possible control field values are defined in 14.2.10.1.

The track number field indicates the track number for which the data in the TOC track descriptor is valid. A track number of 0AAh indicates that the track descriptor is for the start of the lead-out area.

The absolute CD-ROM address contains the address of the first block with user information for that track number as read from the table of contents. An MSF bit of zero indicates that the absolute CD-ROM address field contains a logical block address. An MSF bit of one indicates the absolute CD-ROM address field contains an MSF address (see 14.1.5).

NOTE 186 The starting logical block address value recovered from the TOC has a tolerance of zero for data tracks and plus or minus 75 CD sectors for audio tracks. This tolerance is multiplied by a factor dependent on the logical block length.

Copyright International Organization for Standardization
Provided by IHS under license with ISO
No reproduction or networking permitted without license from IHS Not for Resale

14.3 Parameters for CD-ROM devices

14.3.1 Diagnostic parameters

This subclause defines the descriptors and pages for diagnostic parameters used with CD-ROM devices.

The diagnostic page codes for CD-ROM devices are defined in table 262.

Table 262 - Diagnostic page codes

Page code	Description	Subclause
00h	Supported diagnostic pages	8.3.1.1
01h - 3Fh	Reserved (for all device type pages)	
40h - 7Fh	Reserved	
80h - FFh	Vendor-specific pages	

14.3.2 Log parameters

This subclause defines the descriptors and pages for log parameters used with CD-ROM devices.

The log page codes for CD-ROM devices are defined in table 263.

Table 263 - Log page codes

Page code	Description	Subclause
01h	Buffer over-run/under-run page	8.3.2.1
03h	Error counter (read) page	8.3.2.2
07h	Last n error events page	8.3.2.3
06h	Non-medium error page	8.3.2.4
02h	Reserved	
04h - 05h	Reserved	
08h - 2Fh	Reserved	
3Fh	Reserved	
00h	Supported log pages	8.3.2.5
30h - 3Eh	Vendor-specific pages	

14.3.3 Mode parameters

This subclause defines the descriptors and pages for mode parameters used with CD-ROM devices.

The mode parameter list, including the mode parameter header and mode block descriptor are defined in 8.3.3.

The medium-type code field is contained in the mode parameter header (see 8.3.3). Table 264 defines the medium type values for CD-ROM devices.

Copyright International Organization for Standardization
Provided by IHS under license with ISO
No reproduction or networking permitted without license from IHS Not for Resale

Table 264 - CD-ROM medium type codes

Code	Medium type description
00h	Default (only one type supported)
01h	120 mm CD-ROM data only
02h	120 mm CD-DA audio only
03h	120 mm CD-ROM data and audio combined
04h	Reserved
05h	80 mm CD-ROM data only
06h	80 mm CD-DA audio only
07h	80 mm CD-ROM data and audio combined
08h - 7Fh	Reserved
80h - FFh	Vendor-specific

The device-specific parameter field is contained in the mode parameter header (see 8.3.3). Table 265 defines the device-specific parameter field for CD-ROM devices.

Table 265 - CD-ROM device-specific parameter

Bit	7	6	5	4	3	2	1	0
	Reserved			DPOFUA	Reserved			EBC

When used with the MODE SELECT command, the DPOFUA bit is not used and the field is reserved.

When used with the MODE SENSE command, a DPOFUA bit of one indicates that the target supports the DPO and FUA bits (see 9.2.6).

The enable blank check (EBC) bit is reserved.

The density code field is contained in the mode parameter block descriptor (see 8.3.3). Table 266 defines the density code values for CD-ROM devices.

Table 266 - CD-ROM density codes

Code	Data types to be transferred
00h	Default density code
01h	User data only (2 048 bytes per physical sector)
02h	User data plus auxiliary data field (2 336 bytes per sector)
03h	4-byte tag field, user data plus auxiliary data (2 340 bytes per sector)
04h	Audio information only (1/75th of a second per logical block)
05h - 7Fh	Reserved
80h - FFh	Vendor-specific

NOTE 187 The number of bytes per sector specified by this parameter is used with the block length to map CD-ROM sectors to logical block addresses.

The mode page codes for CD-ROM devices are defined in table 267.

Copyright International Organization for Standardization
Provided by IHS under license with ISO
No reproduction or networking permitted without license from IHS Not for Resale

Table 267 - Mode page codes

Page code	Description	Subclause
08h	Caching page	9.3.3.1
0Eh	CD-ROM audio control page	14.3.3.1
0Dh	CD-ROM page	14.3.3.2
0Ah	Control mode page	8.3.3.1
02h	Disconnect-reconnect page	8.3.3.2
0Bh	Medium types supported page	9.3.3.4
09h	Peripheral device page	8.3.3.3
01h	Read error recovery page	14.3.3.3
03h - 06h	Reserved	
0Ch	Reserved	
0Fh - 1Fh	Reserved	
07h	Verify error recovery page	14.3.3.4
00h	Vendor-specific (does not require page format)	
20h - 3Eh	Vendor-specific (page format required)	
3Fh	Return all pages (valid only for the MODE SENSE command)	

14.3.3.1 CD-ROM audio control parameters

The CD-ROM audio control parameters page (see table 268) sets the playback modes and output controls for subsequent PLAY AUDIO commands and any current audio playback operation.

Table 268 - CD-ROM audio control parameters page

Bit / Byte	7	6	5	4	3	2	1	0
0	PS	Reserved	Page code (0Eh)					
1	Parameter length (0Eh)							
2	Reserved					Immed	SOTC	Reserved
3	Reserved							
4	Reserved							
5	APRVal	Reserved			Format of LBAs/sec			
6	(MSB) Logical blocks per second of audio playback							
7	(LSB)							
8	Reserved				Output port 0 channel selection			
9	Output port 0 volume							
10	Reserved				Output port 1 channel selection			
11	Output port 1 volume							
12	Reserved				Output port 2 channel selection			
13	Output port 2 volume							
14	Reserved				Output port 3 channel selection			
15	Output port 3 volume							

The parameters savable (PS) bit is only used with the MODE SENSE command. This bit is reserved with the MODE SELECT command. A PS bit of one indicates that the target is capable of saving the page in a non-volatile vendor-specific location.

Copyright International Organization for Standardization
Provided by IHS under license with ISO
No reproduction or networking permitted without license from IHS Not for Resale

An immediate (Immed) bit of zero indicates the target shall not send completion status until the audio playback operation is terminated.

An Immed bit of one indicates the target shall send completion status as soon as the playback operation has been started.

NOTE 188 It is recommended that a Logical Unit type RESERVE be issued prior to starting audio play operations with an Immed bit of one in any multiple initiator environment.

A stop on track crossing (SOTC) bit of zero indicates the target shall terminate the audio playback operation when the transfer length is satisfied. Multiple tracks shall be played as necessary. Periods of time encoded as audio pause/silence at the beginning of tracks, (index 0) shall also be played.

A stop on track crossing (SOTC) bit of one indicates the target shall terminate the audio playback operation when the beginning of a following track is encountered.

The audio playback rate valid (APRVal) bit value of one indicates that the format of logical blocks per second field and the logical blocks per second of audio playback field are valid.

The format of LBAs/sec field gives the multiplier to be used with the logical blocks per second of audio playback. This is defined in table 269.

Table 269 - Multiplier for LBAs

Format of LBAs/sec value	Multiplier for LBAs/sec field
0h	1
1h - 7h	Reserved
8h	1/256
9h - Fh	Reserved

NOTE 189 This field is provided as a means to return fractional (i.e. non-integral) values in the logical block addresses per second of audio playback. This shall occur when logical block sizes that are not even multiples or divisions of the physical block size are used.

The logical blocks per second of audio playback field gives the relationship between time and the duration of play per logical block address. The value in this field is to be multiplied by the value in format of LBAs per second field.

NOTE 190 The logical blocks per second of audio playback field and its companion format of LBAs per second field may not be supported by most current CD-ROM devices as a modifiable mode select parameter.

The output port channel selection specifies the audio channels from the disc to which this output port should be connected (see table 270). More than one output port may be connected to an audio channel. More than one audio channel may be connected to an output port.

Table 270 - Output port channel selection

Code	Description
0000b	output port muted
0001b	connect audio channel 0 to this output port
0010b	connect audio channel 1 to this output port
0100b	connect audio channel 2 to this output port
1000b	connect audio channel 3 to this output port

Copyright International Organization for Standardization
Provided by IHS under license with ISO
No reproduction or networking permitted without license from IHS Not for Resale

The channel volume control indicates the relative volume level for this audio output port. A value of zero indicates the output is muted, and a value of FFh indicates maximum volume level.

NOTE 191 If volume controls are implemented, the default volume level should be no more than 25 % of the maximum level as a personal safety consideration.

14.3.3.2 CD-ROM device parameters

The CD-ROM parameters page (see table 271) specifies parameters that affect all CD-ROM data types.

Table 271 - CD-ROM parameters page

Bit / Byte	7	6	5	4	3	2	1	0
0	PS	Reserved	Page code (0Dh)					
1	Parameter length (06h)							
2	Reserved							
3	Reserved				Inactivity timer multiplier			
4	— — - Number of MSF - S units per MSF - M unit — — -							
5								
6	— — - Number of MSF - F units per MSF - S unit — — -							
7								

The parameters savable (PS) bit is only used with the MODE SENSE command. This bit is reserved with the MODE SELECT command. A PS bit of one indicates that the target is capable of saving the page in a non-volatile vendor-specific location.

The inactivity timer multiplier specifies the length of time that the drive shall remain in the hold track state after completion of a seek or read operation (see table 272).

NOTE 192 Higher values in this parameter may have an adverse effect on the drive MTBF, in some implementations.

Table 272 - Inactivity timer multiplier values

Inactivity timer multiplier	Minimum time in hold track state	Inactivity timer multiplier	Minimum time in hold track state
0h	Vendor-specific	8h	16s
1h	125 ms	9h	32s
2h	250 ms	Ah	1 min
3h	500 ms	Bh	2 min
4h	1 s	Ch	4 min
5h	2 s	Dh	8 min
6h	4 s	Eh	16 min
7h	8 s	Fh	32 min

The number of S units per M unit field gives the ratio of these MSF address values. For media conforming to the CD-ROM and CD-DA standard, this value is 60.

The number of F units per S unit field gives the ratio of these MSF address values. For media conforming to the CD-ROM and CD-DA standard, this value is 75.

Copyright International Organization for Standardization
Provided by IHS under license with ISO
No reproduction or networking permitted without license from IHS Not for Resale

14.3.3.3 Read error recovery parameters

The read error recovery parameters page (see table 273) specifies the error recovery parameters the target shall use during any command that performs a data read operation to the media (e.g. READ, READ TOC, etc.).

Table 273 - Read error recovery parameters page

Bit / Byte	7	6	5	4	3	2	1	0
0	PS	Reserved	Page code (01h)					
1	Parameter length (06h)							
2	Error recovery parameter							
3	Read retry count							
4	Reserved							
5	Reserved							
6	Reserved							
7	Reserved							

The parameters savable (PS) bit is only used with the MODE SENSE command. This bit is reserved with the MODE SELECT command. A PS bit of one indicates that the target is capable of saving the page in a non-volatile vendor-specific location.

The error recovery parameter bits are defined in 9.3.3.6.

NOTE 193 The implementation of error recovery procedures for CD-ROM devices is markedly different from those used for magnetic medium disk drives. At least one level of error correction (i.e. CIRC) is required to transfer the data stream. Therefore, the performance of the drive may differ substantially from what would be expected by sending the same error recovery parameters to a magnetic medium device.

The correlation of the error recovery parameter and the bit settings defined for CD-ROM devices is given in table 274. The interpretation of these bit settings for CD-ROM devices is given in table 275. If the error recovery parameter is set to any other value, the command shall be terminated with CHECK CONDITION status. The sense key shall be set to ILLEGAL REQUEST and the additional sense code set to INVALID FIELD IN PARAMETER LIST.

Copyright International Organization for Standardization
Provided by IHS under license with ISO
No reproduction or networking permitted without license from IHS Not for Resale

Table 274 - Error recovery bit settings

Error recovery parameter	Bit settings							
	7	6	5	4	3	2	1	0
00h	R	R	0	0	R	0	0	0
01h	R	R	0	0	R	0	0	1
04h	R	R	0	0	R	1	0	0
05h	R	R	0	0	R	1	0	1
06h	R	R	0	0	R	1	1	0
07h	R	R	0	0	R	1	1	1
10h	R	R	0	1	R	0	0	0
11h	R	R	0	1	R	0	0	1
14h	R	R	0	1	R	1	0	0
15h	R	R	0	1	R	1	0	1
20h	R	R	1	0	R	0	0	0
21h	R	R	1	0	R	0	0	1
24h	R	R	1	0	R	1	0	0
25h	R	R	1	0	R	1	0	1
26h	R	R	1	0	R	1	1	0
27h	R	R	1	0	R	1	1	1
30h	R	R	1	1	R	0	0	0
31h	R	R	1	1	R	0	0	1
34h	R	R	1	1	R	1	0	0
35h	R	R	1	1	R	1	0	1

NOTE Reserved bits shall be set to zero.

Copyright International Organization for Standardization
Provided by IHS under license with ISO
No reproduction or networking permitted without license from IHS
Not for Resale

Table 275 - CD-ROM error recovery descriptions

Error recovery description
00h The maximum error recovery procedures available are used. If an error occurs which is uncorrectable with the error correction codes (ECC) on the media, data transfer is terminated with CHECK CONDITION status. The block with the error is not transferred. The sense key is set to MEDIUM ERROR. The information bytes give the address of the block where the unrecovered error was detected. Recovered errors are not reported.
01h Only retries of the read operation and CIRC are used (layered error correction is not used). Only CIRC unrecovered data errors are reported. If a CIRC unrecovered data error occurs, data transfer is terminated with CHECK CONDITION status. The block with the error is not transferred. The sense key is set to MEDIUM ERROR. The information bytes give the address of the block where the unrecovered error was detected. Recovered errors are not reported.
04h The maximum error recovery procedures available are used. Recovered data errors are reported. If a recovered data error occurs, data transfer is not terminated. However, when the data transfer has completed CHECK CONDITION status is reported. The sense key is set to RECOVERED ERROR. The information bytes give the address of the last block where a recovered data error was detected. If a data error occurs that is uncorrectable with the ECC information available on the media, data transfer is terminated and CHECK CONDITION status is reported. The block with the error is not transferred. The sense key is set to MEDIUM ERROR. The information bytes give the address of the block where the uncorrectable error was detected.
05h Only retries of the read operation and CIRC are used (layered error correction is not used). Recovered data errors are reported. If a recovered data error occurs, data transfer is not terminated. However, when the data transfer has completed CHECK CONDITION status is reported. The sense key is set to RECOVERED ERROR. The information bytes give the address of the last block where a CIRC recovered data error was detected. If an unrecovered data error occurs, data transfer is terminated and CHECK CONDITION status is reported. The block with the error is not transferred. The sense key is set to MEDIUM ERROR. The information bytes give the address of the block where the unrecovered error was detected.
06h The maximum error recovery procedures are used. Recovered data errors are reported. If a recovered data error occurs data transfer is terminated and CHECK CONDITION status is reported. The block with the recovered error is not transferred. The sense key is set to RECOVERED ERROR. The information bytes give the address of the block where the recovered data error was detected. If a data error occurs that is uncorrectable with the ECC information on the medium, data transfer is terminated with CHECK CONDITION status. The block with the error is not transferred. The sense key is set to MEDIUM ERROR. The information bytes give the address of the block where the uncorrectable error was detected.

Copyright International Organization for Standardization
Provided by IHS under license with ISO
No reproduction or networking permitted without license from IHS Not for Resale

Table 275 (continued)

Error recovery description
07h Only retries of the read operation are used (layer error correction is not used). CIRC recovered data errors are reported. If a CIRC recovered data error occurs, data transfer is terminated with CHECK CONDITION status. The block with the recovered error is not transferred. The sense key is set to RECOVERED ERROR. The information bytes give the address of the block where the recovered data error was detected. If a CIRC unrecovered data error occurs, data transfer is terminated with CHECK CONDITION status. The block with the error is not transferred. The sense key is set to MEDIUM ERROR. The information bytes give the address of the block where the unrecovered error was detected.
10h If data transfer can be maintained, the maximum error recovery procedures available are used. (RC = 1.) If an error occurs which is uncorrectable with the error correction codes (ECC) on the media, or is uncorrectable in time to maintain data transfer, the data transfer is not terminated. However, when the data transfer has completed, CHECK CONDITION status is reported. The sense key is set to MEDIUM ERROR. The information bytes give the address of the block where the first unrecovered error was detected. Recovered errors are not reported.
11h If data transfer can be maintained, retries of the read operation and CIRC are used (layered error correction is not used). (RC = 1.) Only CIRC unrecovered data errors are reported. If a CIRC unrecovered data error occurs, data transfer is not terminated. However, when the data transfer has completed, CHECK CONDITION status is reported. The sense key is set to MEDIUM ERROR. The information bytes give the address of the block where the first unrecovered error was detected. Recovered errors are not reported.
14h If data transfer can be maintained, the maximum error recovery procedures available are used. (RC = 1.) Recovered data errors are reported. If a recovered data error occurs, data transfer is not terminated. However, when the data transfer has completed, CHECK CONDITION status is reported. The sense key is set to RECOVERED ERROR. The information bytes give the address of the block where a recovered data error was detected. If an data error occurs that is uncorrectable with the ECC information available on the media, or is uncorrectable in time to maintain data transfer, the data transfer is not terminated. However, when the data transfer has completed CHECK CONDITION, status is reported. The sense key is set to MEDIUM ERROR. The information bytes give the address of the block where the first uncorrectable error was detected. Reporting unrecovered errors takes precedence over reporting recovered errors.

Copyright International Organization for Standardization
Provided by IHS under license with ISO
No reproduction or networking permitted without license from IHS Not for Resale

Table 275 (continued)

Error recovery description
15h If data transfer can be maintained, retries of the read operation and CIRC are used (layered error correction is not used). (RC = 1.) Recovered data errors are reported. If a recovered data error occurs, data transfer is not terminated. However, when the data transfer has completed CHECK CONDITION status is reported. The sense key is set to RECOVERED ERROR. The information bytes give the address of the block where a CIRC recovered data error was detected. If an unrecovered data error occurs, data transfer is not terminated. However, when the data transfer has completed CHECK CONDITION status is reported. The sense key is set to MEDIUM ERROR. The information bytes give the address of the block where the first unrecovered error was detected. Reporting unrecovered errors takes precedence over reporting recovered errors.
20h The maximum error recovery procedures available are used. If an error occurs which is uncorrectable with the error correction codes (ECC) on the media, data transfer is terminated with CHECK CONDITION status. The block with the error is transferred. The sense key is set to MEDIUM ERROR. The information bytes give the address of the block where the unrecovered error was detected. Recovered errors are not reported.
21h Only retries of the read operation and CIRC are used (layered error correction is not used). Only CIRC unrecovered data errors are reported. If a CIRC unrecovered data error occurs data transfer is terminated with CHECK CONDITION status. The block with the error is transferred. The sense key is set to MEDIUM ERROR. The information bytes give the address of the block where the unrecovered error was detected. Recovered errors are not reported.
24h The maximum error recovery procedures available are used. Recovered data errors are reported. If a recovered data error occurs data transfer is not terminated. However, when the data transfer has completed, CHECK CONDITION status is reported. The sense key is set to RECOVERED ERROR. The information bytes give the address of the last block where a recovered data error was detected. If a data error occurs that is uncorrectable with the ECC information available on the media data transfer is terminated and CHECK CONDITION status is reported. The block with the error is transferred. The sense key is set to MEDIUM ERROR. The information bytes give the address of the block where the uncorrectable error was detected.

Copyright International Organization for Standardization
Provided by IHS under license with ISO
No reproduction or networking permitted without license from IHS Not for Resale

Table 275 (concluded)

Error recovery description
25h Only retries of the read operation and CIRC are used (layered error correction is not used). Recovered data errors are reported. If a recovered data error occurs, data transfer is not terminated. However, when the data transfer has completed, CHECK CONDITION status is reported. The sense key is set to RECOVERED ERROR. The information bytes give the address of the last block where a CIRC recovered data error was detected. If an unrecovered data error occurs, data transfer is terminated and CHECK CONDITION status is reported. The block with the error is transferred. The sense key is set to MEDIUM ERROR. The information bytes give the address of the block where the unrecovered error was detected.
26h The maximum error recovery procedures are used. Recovered data errors are reported. If a recovered data error occurs, data transfer is terminated and CHECK CONDITION status is reported. The block with the recovered error is transferred. The sense key is set to RECOVERED ERROR. The information bytes give the address of the block where the recovered data error was detected. If a data error occurs that is uncorrectable with the ECC information on the media, data transfer is terminated with CHECK CONDITION status. The block with the error is transferred. The sense key is set to MEDIUM ERROR. The information bytes give the address of the block where the uncorrectable error was detected.
27h Only retries of the read operation are used (layer error correction is not used). CIRC recovered data errors are reported. If a CIRC recovered data error occurs, data transfer is terminated with CHECK CONDITION status. The block with the recovered error is transferred. The sense key is set to RECOVERED ERROR. The information bytes give the address of the block where the recovered data error was detected. If a CIRC unrecovered data error occurs, data transfer is terminated with CHECK CONDITION status. The block with the error is transferred. The sense key is set to MEDIUM ERROR. The information bytes give the address of the block where the unrecovered error was detected.
30h Same as code 10H.
31h Same as code 11H.
34h Same as code 14H.
35h Same as code 15H.

The read retry count field specifies the number of times that the controller shall attempt its read recovery algorithm.

A CIRC recovered data error is defined as a block for which the CIRC based error correction algorithm was unsuccessful for a read attempt, but on a subsequent read operation no error was reported. The number of subsequent read operations is limited to the read retry count. Layered error correction was not used.

A CIRC unrecovered data error is defined as a block for which the CIRC based error correction algorithm was unsuccessful on all read attempts up to the read retry count. Layered error correction was not used.

An L-EC recovered data error is defined as a block for which the CIRC based error correction algorithm was unsuccessful, but the layered error correction was able to correct the block within the read retry count.

An L-EC uncorrectable data error is defined as a block which could not be corrected by layered error correction within the read retry count.

Copyright International Organization for Standardization
Provided by IHS under license with ISO
No reproduction or networking permitted without license from IHS Not for Resale

14.3.3.4 Verify error recovery parameters

The verify error recovery parameters page (see table 276) specifies the error recovery parameter the target shall use during verify operations.

Table 276 - Verify error recovery parameters page

Bit / Byte	7	6	5	4	3	2	1	0
0	PS	Reserved	Page code (07h)					
1	Parameter length (06h)							
2	Error recovery parameter							
3	Verify retry count							
4	Reserved							
5	Reserved							
6	Reserved							
7	Reserved							

The parameters savable (PS) bit is only used with the MODE SENSE command. This bit is reserved with the MODE SELECT command. A PS bit of one indicates that the target is capable of saving the page in a non-volatile vendor-specific location.

The error recovery parameters for verify operations are as defined by the read error recovery parameters (see 14.3.3.3).

14.4 Definitions specific to CD-ROM devices

14.4.1 absolute F field: The sub-division of the S Field part of the absolute physical address from the beginning of the media. One physical sector. Written on CD-ROM media in binary coded decimal notation. The value is from 00bcd to 74bcd. (See 14.4.12 and 14.4.18.)

14.4.2 absolute M field: The most significant part of the absolute physical address from the beginning of the media. Written on CD-ROM media in binary coded decimal notation. The value is from 00bcd to 74bcd. (See 14.4.18.)

14.4.3 absolute S field: The intermediate significant part of the absolute physical address from the beginning of the media. Written on CD-ROM media in binary coded decimal notation. The value is from 00bcd to 59bcd. (See 14.4.18.)

14.4.4 bcd; binary coded decimal: The number system used on the physical CD-ROM and CD-DA media. Numbers that use this notation have the 'bcd' suffix attached. A byte has two four-bit values each of which can have a value from 0 to 9. The maximum value is 99bcd (99 decimal). Hence the maximum number of tracks is 99bcd.

Example: 00 01 02 03 ... 08 09 10 11 ... 19 20 21 ... 98 99.

14.4.5 block: The term block refers to the data in one logical block - the number of bytes defined by the logical block length in the mode block descriptor.

Copyright International Organization for Standardization
Provided by IHS under license with ISO
No reproduction or networking permitted without license from IHS Not for Resale

14.4.6 blocks per sector: The number of logical blocks read from each CD-ROM physical sector. The value depends on the logical block Length as defined in the mode block descriptor. The value for blocks per sector is:

1 if the logical block length is 2 048,
2 if the logical block length is 1 024,
4 if the logical block length is 512, and
8 if the logical block length is 256 bytes.

(Assuming a density code of 1 - 2 048 bytes of data per sector.)

14.4.7 CD-DA; compact disc - digital audio: The standardized media for recording digital audio information. The 'Red Book' defines CD-DA media.

14.4.8 CD-ROM; compact disc - read only memory: A standardized medium for recording digitized audio and digital data. CD-ROM is used to describe media with digital data rather than discs that encode audio only. The ISO/IEC 10149 standard defines CD-ROM media.

14.4.9 CD-ROM control field: A four bit field in the Q sub-channel data indicating the type of information encoded on the current track. Indicates audio versus data and the type of audio encoding, etc. The control field is also found in the table of contents entries.

14.4.10 CD-ROM data mode: A byte in the header of CD-ROM data sectors. This indicates if data is present and if layered error correction information is present.

14.4.11 CIRC; cross interleaved Reed-Solomon code: The error detection and correction technique used within small frames of audio or data. The CIRC bytes are present in all CD-ROM data modes. The error correction procedure which uses the CIRC bytes is referred to as the CIRC based algorithm. In most CD-ROM drives, this function is implemented in hardware.

14.4.12 frame: A physical sector on CD-ROM media. Also the F field unit of a MSF CD-ROM address. The term frame is also used in the CD-ROM model to describe the amount of data received between synchronization patterns. 98 of these frames make a sector. This sort of frame is referred to as 'small frames' where the meaning is not clear from context.

14.4.13 hold track state: When a CD-ROM device enters the hold track state the optical pick-up is maintained at an approximately constant position on the media. This allows a paused operation to be resumed without latency due to seeking. Rotational latency may be incurred, however.

14.4.14 index: An index is a subdivision of a CD-ROM track. A track can have from 1 to 99 index numbers. Index numbers within a track are sequential starting with 1.

14.4.15 lead-in area: The area on a CD-ROM disc prior to track one. The main channel in the lead-in area contains audio or data null information. This area is coded as track zero but is not addressable via the SCSI command set. The Q sub-channel in this area is coded with the table of contents information.

14.4.16 lead-out area: The area on a CD-ROM disc beyond the last information track. The main channel in the lead-out area contains audio or data null information. This area is coded as track AAbcd but is not addressable via the SCSI command set. The READ CD-ROM CAPACITY data is the first logical block address of this area minus one.

14.4.17 L-EC; layered error correction: The error correction technique used with CD-ROM data mode one sectors. In such sectors, 276 bytes of the auxiliary data field contain L-EC bytes. The algorithm that uses these bytes to perform error correction is often implemented in the drive firmware.

14.4.18 MSF address: The physical address written on CD-ROM discs. Expressed as a sector count relative to either the beginning of the medium (absolute) or to the beginning of the current track (relative). As defined by the CD-DA and CD-ROM standards, each F field unit is one physical sector; each S field unit is 75 F field units; each

--`,,```,,,,````-`-`,,`,,`,`,,`---

Copyright International Organization for Standardization
Provided by IHS under license with ISO
No reproduction or networking permitted without license from IHS Not for Resale

M field unit is 60 S field units. Valid contents of F fields are binary values from 0 through 74. Valid contents of S fields are binary values from 0 through 59. Valid contents of M fields are binary values from 0 through 74.

14.4.19 output port: A means for connecting the audio signal being played to equipment outside the CD-ROM device.

14.4.20 pause area: A transition area at the beginning or end of an audio track encoded with audio silence. This transition area is required where the audio track immediately precedes a data track.

14.4.21 post-gap area: A transition area at the end of a data track encoded with null information. This transitio area is required where the data track immediately precedes an audio track.

14.4.22 pre-gap area: A transition area at the beginning of a data track encoded with null information. This transition area is required where the data track immediately follows an audio track.

14.4.23 relative F field: The sub-division of the S field part of the relative physical address from the beginning c the current track. One physical sector. Written on CD-ROM medium in binary coded decimal notation. The value is from 00bcd to 74bcd. (See 14.4.12 and 14.4.18.)

14.4.24 relative M field: The most significant part of the relative physical address from the beginning of the current track. Written on CD-ROM media in binary coded decimal notation. The value is from 00bcd to 74bcd. (See 14.4.18.)

14.4.25 relative S field: The intermediate significant part of the relative physical address from the beginning of the current track. Written on CD-ROM medium in binary coded decimal notation. The value is from 00bcd to 59bcd. (See 14.4.18.)

14.4.26 sector: Refers to the data contained during one frame time. (On CD-DA medium with two channels of audio this is 1/75th of a second). In the CD-ROM standard document the term block is used for this unit. There may be more than one logical block per sector. Similarly, a single logical block may map to multiple sectors.

14.4.27 sub-channel: CD-ROM and CD-DA media have a main channel and a sub-channel. The sub-channel area has eight parts called P, Q, R, S, T, U, V, and W. The Q sub-channel contains information useful to the controller and drive, such as the control field and MSF addresses. The data rate of each sub-channel (P, Q, etc. is 1/192nd of that of the main channel.

14.4.28 TOC: The table of contents has information on the type of disc and the starting address of the tracks. This information is encoded in the Q sub-channel.

14.4.29 track: A sub-division of the CD-ROM media. A disc has from one to ninety-nine tracks. The data within track is always of the same type. A track can be either CD-ROM or CD-Audio. A disc can start at any track number.

14.4.30 track relative logical address: An offset from the beginning of the recorded information on a track expressed in units of the logical block length. The value is used to address logical blocks relative to the beginning of a track using the relative MSF address encoded in the CD-ROM Q sub-channel.

14.4.31 transition area: Sectors at the beginning or end of tracks coded with null information. Where required by the media standards, these areas have minimum lengths of 1 s or 2 s. The maximum lengths are not specified. Transition areas at the beginning of a track are encoded with index zero. Addresses within transition areas may not be read.

Copyright International Organization for Standardization
Provided by IHS under license with ISO
No reproduction or networking permitted without license from IHS Not for Resale

15 Scanner devices

15.1 Model for scanner devices

Scanner devices generate a digital representation of two- or three-dimensional objects (e.g. a page of text, a photograph, or a piece of art). This is accomplished by sensing the amount of light reflected from the object and generating the digital data. The digital data can then be sent across the SCSI bus to an initiator for further processing.

There are two types of scanners in use; in one type, the operations and functions of the scanner are fixed; in the other type, the operations and functions are programmable and need to be set up prior to being used for scanning objects.

The scanner device generates the data and transfers it in accordance with the commands received from the initiator. The contents of the data is vendor-specific; therefore, the initiator and the scanner must know how to use the contents of the data.

Scanners generate a digital image of an object in a two dimensional plane. The *x*-axis dimension is along the cross-scan direction that is perpendicular to the direction in which a scan occurs. The *y*-axis dimension is along the scan direction, and is parallel to the direction in which a scan occurs. The coordinates are measured from the upper left hand corner of the two dimensional plane. The *x*-axis measurement increases in a positive manner going from left to right. The left side of the two dimensional plane (i.e. where *x* equals zero) is called the base element line. The *y*-axis measurement increases in a positive manner going from top to bottom. The top side of the two dimensional plane (i.e. where *y* equals zero) is called the base line. The scanning range encompasses the area in which the scanner can operate, from the scan line and base line to the maximum *x* and *y* position. These conventions are adopted to aid in understanding the fields within the command descriptor blocks and parameters used for scanner devices. As such this is a conceptual model and may not accurately reflect the physical device.

The displacements used for positioning windows is independent of the resolution with which a window is scanned. The measurement of displacements is controlled by the scan measurement mode parameters.

In the event of a scanner automatic creation of sub-windows within a defined window (i.e. the auto bit in the window descriptor bytes parameters is one), one of the following responses is appropriate:

a) the initiator may issue a GET WINDOW command prior to any READ commands;
b) if the initiator issues a READ command before issuing a GET WINDOW PARAMETERS command, the target shall return CHECK CONDITION status. The ILI and valid bits in the sense data shall be set to one. The initiator should then issue a GET WINDOW PARAMETERS command. This feature is useful when the scanner has the ability to distinguish between image and text data and to define windows accordingly.

It may occur that a scanner device temporarily does not have resources available to manage a data transfer from the initiator or does not have data available to transfer to the initiator. One of the following responses is appropriate in such a case:

a) A CHECK CONDITION status is returned and the sense key is set to NOT READY with the appropriate additional sense code. This response is applicable to a TEST UNIT READY command.
b) The target disconnects until the resource or data are available, and then reconnects to resume the operation.
c) A BUSY status is returned.

If the scanner device determines that an error or exception condition has occurred while executing the SCSI command from the initiator, a CHECK CONDITION status is returned. A REQUEST SENSE command can then be used to determine additional information regarding the error or exception condition.

--`,,```,,,,````-`-`,,`,,`,`,,`---

Copyright International Organization for Standardization
Provided by IHS under license with ISO
No reproduction or networking permitted without license from IHS Not for Resale

15.2 Commands for scanner devices

The commands for scanner devices shall be as shown in table 277.

Table 277 - Commands for scanner devices

Command name	Operation code	Type	Subclause
CHANGE DEFINITION	40h	O	8.2.1
COMPARE	39h	O	8.2.2
COPY	18h	O	8.2.3
COPY AND VERIFY	3Ah	O	8.2.4
GET DATA BUFFER STATUS	34h	O	15.2.1
GET WINDOW	25h	O	15.2.2
INQUIRY	12h	M	8.2.5
LOG SELECT	4Ch	O	8.2.6
LOG SENSE	4Dh	O	8.2.7
MODE SELECT(06)	15h	O	8.2.8
MODE SELECT(10)	55h	O	8.2.9
MODE SENSE(06)	1Ah	O	8.2.10
MODE SENSE(10)	5Ah	O	8.2.11
OBJECT POSITION	31h	O	15.2.3
READ	28h	M	15.2.4
READ BUFFER	3Ch	O	8.2.12
RECEIVE DIAGNOSTIC RESULTS	1Ch	O	8.2.13
RELEASE UNIT	17h	M	10.2.9
REQUEST SENSE	03h	M	8.2.14
RESERVE UNIT	16h	M	10.2.10
SCAN	1Bh	O	15.2.5
SET WINDOW	24h	M	15.2.7
SEND	2Ah	O	15.2.6
SEND DIAGNOSTIC	1Dh	M	8.2.15
TEST UNIT READY	00h	M	8.2.16
WRITE BUFFER	3Bh	O	8.2.17

Key: M = command implementation is mandatory.
O = command implementation is optional.

All other operation codes for scanner devices are reserved for future standardization.

Copyright International Organization for Standardization
Provided by IHS under license with ISO
No reproduction or networking permitted without license from IHS Not for Resale

15.2.1 GET DATA BUFFER STATUS command

The GET DATA BUFFER STATUS command (see table 278) provides a means for the initiator to get information about the data buffer. Information is returned only for window identifiers for which a SCAN command has been received (see 15.2.5).

Table 278 - GET DATA BUFFER STATUS command

Bit / Byte	7	6	5	4	3	2	1	0
0	Operation code (34h)							
1	Logical unit number			Reserved				Wait
2	Reserved							
3	Reserved							
4	Reserved							
5	Reserved							
6	Reserved							
7	(MSB) Allocation length							
8								(LSB)
9	Control							

A wait bit of zero indicates that the target shall respond immediately. A wait bit of one indicates that the target shall wait for image data to be available before returning scan status data.

The data buffer status data format is defined in table 279.

Copyright International Organization for Standardization
Provided by IHS under license with ISO
No reproduction or networking permitted without license from IHS Not for Resale

Table 279 - Data buffer status format

Bit / Byte	7	6	5	4	3	2	1	0
0	(MSB)							
1				Data buffer status length				
2								(LSB)
3				Reserved				Block
				Data buffer status descriptor(s)				
0				Window identifier				
1				Reserved				
2	(MSB)							
3				Available data buffer				
4								(LSB)
5	(MSB)							
6				Filled data buffer				
7								(LSB)

The data buffer status length indicates the length, in bytes, of the following scan status data that is available to be transferred during the DATA IN phase. The data buffer status length does not include itself. The data buffer status data transferred to the initiator includes zero or more data buffer status descriptors. Each descriptor returns information for the window specified by the window identifier.

The block bit specifies the buffering capabilities of the scanner. A block bit of one indicates that the data buffer is full and all image data must be transferred to the initiator before the scan operation resumes. A block bit of zero indicates that the data buffer is not full and scan operations can continue with the available data buffer space.

The available data buffer field indicates, in bytes, the amount of buffer available for transfers from the initiator. This field is valid only in scanners with the ability to accept data from an initiator for processing.

The filled data buffer field indicates the amount of image data in bytes available for transfer to the initiator.

Copyright International Organization for Standardization
Provided by IHS under license with ISO
No reproduction or networking permitted without license from IHS Not for Resale

15.2.2 GET WINDOW command

The GET WINDOW command (see table 280) provides a means for the initiator to get information about previously defined windows.

Table 280 - GET WINDOW command

Bit / Byte	7	6	5	4	3	2	1	0
0	Operation code (25h)							
1	Logical unit number			Reserved				Single
2	Reserved							
3	Reserved							
4	Reserved							
5	Window identifier							
6	(MSB)							
7	Transfer length							
8								(LSB)
9	Control							

A single bit of one specifies that a single window descriptor shall be returned for the specified window identifier. A single bit of zero specifies that window descriptors be returned for all window identifiers that were defined by a SET WINDOWS command or by the target, if the automatic bit was set to one.

The GET WINDOW data shall consist of a header (see table 281) followed by one or more window descriptors. Each window descriptor specifies the location, size, and scanning method used for a window.

Table 281 - Get window data header

Bit / Byte	7	6	5	4	3	2	1	0
0	(MSB)							
1	Window data length							(LSB)
2	Reserved							
3	Reserved							
4	Reserved							
5	Reserved							
6	(MSB)							
7	Window descriptor length							(LSB)

The window data length specifies the length in bytes of the following data that is available to be transferred. The window data length does not include itself. If the allocation length is not sufficient to return all the get window data, the window data length shall not be adjusted to reflect the truncation data.

Copyright International Organization for Standardization
Provided by IHS under license with ISO
No reproduction or networking permitted without license from IHS Not for Resale

The window descriptor length specifies the length in bytes of a single window descriptor. Each descriptor shall be of equal length. The first forty-eight bytes are defined in this International Standard and the remaining bytes in each descriptor are vendor-specific.

The window descriptors are defined in table 282.

Table 282 - Window descriptor bytes

Bit / Byte	7	6	5	4	3	2	1	0
0	Window identifier							
1	Reserved							Auto
2	(MSB)			X-Axis resolution				
3								(LSB)
4	(MSB)			Y-Axis resolution				
5								(LSB)
6	(MSB)			X-Axis upper left				
9								(LSB)
10	(MSB)			Y-Axis upper left				
13								(LSB)
14	(MSB)			Window width				
17								(LSB)
18	(MSB)			Window length				
21								(LSB)
22	Brightness							
23	Threshold							
24	Contrast							
25	Image composition							
26	Bits per pixel							
27	(MSB)			Halftone pattern				
28								(LSB)
29	RIF			Reserved		Padding type		
30	(MSB)			Bit ordering				
31								(LSB)
32	Compression type							
33	Compression argument							
34	Reserved							
39								
40	Vendor-specific parameter byte(s)							
n								

The window identifier specifies the window defined by the window descriptor. A window is referenced by the window identifier during data transfers and parameter updates.

Copyright International Organization for Standardization
Provided by IHS under license with ISO
No reproduction or networking permitted without license from IHS Not for Resale

When used with the SET WINDOW command, an automatic (auto) bit of one indicates that the target is allowed to create sub-windows within the window specified. An auto bit of zero indicates that the target is not allowed to create sub-windows.

When used with the GET WINDOW command, an auto bit of zero indicates that the window was defined directly by the SET WINDOW command. A value of one indicates that the window was defined by the target. This is a sub-window within a window defined by a SET WINDOW command.

The window identifiers assigned by the target shall be unique and shall not be currently in use. The parameters for the sub-windows may be retrieved using the GET WINDOW command.

The *x*-axis resolution field specifies the resolution in the scan line direction. The unit of measure is picture elements (pixels) per 25.4 mm (inch). A value of zero specifies the default resolution.

The *y*-axis resolution field specifies the resolution in the base line direction. The unit of measure is scan lines per 25.4 mm (inch). A value of zero specifies the default resolution.

The *x*-axis upper left field specifies the x-axis coordinate of the upper left corner of the window. This coordinate is measured from the scan line using the target's current measurement unit divisor (see 15.3.3.1).

The *y*-axis upper left field specifies the y-axis coordinate of the upper left corner of the window. This coordinate is measured from the base line using target's current measurement unit divisor (see 15.3.3.1).

The window width field specifies the width of window in the scan line direction. The window width is measured using the target's current measurement unit divisor (see 15.3.3.1).

The window length field specifies the length of the window in the base line direction. The window length is measured using the target's current measurement unit divisor (see 15.3.3.1).

The brightness field specifies the level of brightness used to scan the object. A value of zero specifies the default brightness or automatic brightness control, if it is supported. Any other value indicates a relative brightness setting, with 255 being the highest setting, one being the lowest setting, and 128 being the nominal setting.

The threshold field specifies the threshold at which scan data is converted to binary data. A value of zero specifies the default threshold or automatic threshold control if it is supported. Any other value indicates relative threshold setting, with 255 being the highest setting, one being the lowest setting, and 128 being the nominal setting.

The contrast field specifies the level of contrast used to scan the object. A value of zero specifies the default contrast or automatic contrast control, if it is supported. Any other value indicates a relative contrast setting, with 255 being the highest setting, one being the lowest setting, and 128 being the nominal setting.

The halftone field specifies the level of halftone at which the scan data is converted to binary data. The values in this field are vendor-specific. The halftone field is used in conjunction with the image composition field.

The image composition field specifies the type of scan operation requested. The image composition is defined as shown in table 283.

--`,,```,,,,````-`-`,,`,,`,`,,`---
Copyright International Organization for Standardization
Provided by IHS under license with ISO
No reproduction or networking permitted without license from IHS
Not for Resale

Table 283 - Image composition codes

Code	Description
00h	Bi-level black & white
01h	Dithered/halftone black & white
02h	Multi-level black & white (gray scale)
03h	Bi-level RGB colour
04h	Dithered/halftone RGB colour
05h	Multi-level RGB colour
06h - FFh	Reserved

The bits per pixel field specifies the number of bits used to represent the intensity of a single colour.

A reverse image format (RIF) bit of zero indicates that white pixels are indicated by zeros and black pixels are indicated by ones. A RIF bit of one indicates that white pixels are to be indicated by ones and black pixels are to be indicated by zeros. The RIF bit is applicable only for images represented by one bit per pixel.

The padding type field specifies how the target shall pad the image data transmitted to the initiator if it is not an integral number of bytes. The padding type is defined in table 284.

Table 284 - Padding types

Code	Description
00h	No padding
01h	Pad with 0's to byte boundary
02h	Pad with 1's to byte boundary
03h	Truncate to byte boundary
04h - FFh	Reserved

The bit ordering field specifies the order in which data is transferred to the host from the window. The bit ordering specifies the direction of pixels in a scan line, the direction of scan lines within a window and the image data packing within a byte. The values in this field are vendor-specific.

The compression type and compression argument fields specify the compression technique to be applied to the image data (see table 285).

Table 285 - Compression types and arguments

Compression code	Description	Compression argument
00h	No compression	Reserved
01h	CCITT group III, 1 dimensional	Reserved
02h	CCITT group III, 2 dimensional	K factor
03h	CCITT group IV, 2 dimensional	Reserved
04h - 0Fh	Reserved	Reserved
10h	Optical character recognition (OCR)	Vendor-specific
11h - 7Fh	Reserved	Reserved
80h - FFh	Vendor-specific	Vendor-specific

Copyright International Organization for Standardization
Provided by IHS under license with ISO
No reproduction or networking permitted without license from IHS Not for Resale

15.2.3 OBJECT POSITION command

The OBJECT POSITION command (see table 286) provides positioning functions. Absolute as well as relative positioning is provided. A target shall return CHECK CONDITION status and set the sense key to ILLEGAL REQUEST if a positioning function is requested that is not supported.

Table 286 - OBJECT POSITION command

Bit / Byte	7	6	5	4	3	2	1	0
0	Operation code (31h)							
1	Logical unit number			Reserved		Position function		
2	(MSB)							
3	Count							
4								(LSB)
5	Reserved							
6	Reserved							
7	Reserved							
8	Reserved							
9	Control							

The position function field specifies the requested function (see table 287).

Table 287 - Position function

Position function	Description
000b	Unload object
001b	Load object
010b	Absolute positioning
011b	Relative positioning
100b	Rotate object
101b	Reserved
110b	Reserved
111b	Reserved

a) Unload Object. This position function specifies that the object shall be positioned for removal. If upon receipt of this command there is no object loaded, the target shall return a GOOD status. This condition shall not be considered as an error. If the target is unable to unload the object (i.e. paper jam or mis-feed condition), the target shall return CHECK CONDITION status and set the sense key sense to MEDIUM ERROR.

b) Load object. This position function specifies that the object is to be loaded and positioned to the base line. If upon receipt of this command there is a object already loaded, the target shall returns GOOD status. This condition shall not be considered as an error. If an object is not loaded and the target is unable to load an object, the target shall return CHECK CONDITION status and set the EOM bit to one and the sense key to MEDIUM ERROR.

c) Absolute positioning. This position function specifies that the object is to be positioned at a y-axis displacement from the base line. The *y*-axis displacement is determined using the count field and the

Copyright International Organization for Standardization
Provided by IHS under license with ISO
No reproduction or networking permitted without license from IHS Not for Resale

target's current measurement unit divisor (see 15.3.3.1). A count field of zero positions the object at the base line.

Any other value in the count field shall cause the target to position the object that number of units in the scan line direction. If there is no object loaded or if the specified *y*-axis displacement is not achieved, the target shall return CHECK CONDITION status and set the EOM bit to one and the sense key to MEDIUM ERROR.

d) Relative positioning. This position function specifies that the object is to be positioned at a *y*-axis displacement relative to the current position. The *y*-axis displacement is determined using the count field and the target's current measurement unit divisor (see 15.3.3.1). A count field of zero causes no change in position of the object.

A positive value in the count field shall cause the target to position the object that number of units in the scan line direction. If the scan range is exceeded, the target shall return CHECK CONDITION status. The EOM bit is set to one, the ILI bit is set to one, and the sense key is set to MEDIUM ERROR. The valid bit is set to one and the information bytes are set to the difference (residue) between the requested count and the actual number of units moved.

A negative value (e.g. twos complement notation) in the count field shall cause the target to position the object that number of units toward the base line. If there is no object loaded or if the specified *y*-axis displacement is not achieved, the target shall return CHECK CONDITION status and set the EOM bit to one and the sense key to MEDIUM ERROR. If the base line is encountered, the target shall position the object at the base line and return CHECK CONDITION status. The ILI bit is set to one and the sense key is set to MEDIUM ERROR. The valid bit is set to one and the information bytes are set to the difference (residue) between the requested count and the actual number of units moved.

e) Rotate object. This position function specifies that the object is rotated in an anti-clockwise direction expressed in thousandths of a degree. The count field specifies the number of units that the object is to be moved.

The count field is used with the position function to specify the displacement of the object.

Copyright International Organization for Standardization
Provided by IHS under license with ISO
No reproduction or networking permitted without license from IHS Not for Resale

15.2.4 READ command

The READ command (see table 288) requests that the target transfer data to the initiator.

Table 288 - READ command

Bit / Byte	7	6	5	4	3	2	1	0
0	Operation code (28h)							
1	Logical unit number			Reserved				
2	Data type code							
3	Reserved							
4	(MSB)			Data type qualifier				
5								(LSB)
6	(MSB)							
7				Transfer length				
8								(LSB)
9	Control							

The transfer data type distinguishes between the different types of data that may be transferred between the initiator and the target. The types of transfers are specified in table 289.

Table 289 - Data type codes

Code	Description
00h	Image
01h	Vendor-specific
02h	Halftone mask
03h	Gamma function
04h - 7Fh	Reserved
80h - FFh	Vendor-specific

The data type qualifier field provides a means to differentiate data transfers of the same data type code. The values used in this field are vendor-specific.

The transfer length specifies the number of blocks the target shall transfer to the initiator during the DATA IN phase. The block size is the current block size in the mode parameters block descriptor (see 8.3.3). A transfer length of zero is not considered an error and no data shall be transferred.

If the target transfers less than transfer length blocks, a CHECK CONDITION status shall be returned. The ILI bit is set to one, the valid bit is set to one, and the information bytes are set to the difference (residue) between the requested transfer length and the actual number of blocks transferred.

This command shall be terminated with a status of RESERVATION CONFLICT if any reservation access conflict (see 10.2.10) exists, and no data shall be transferred.

--`,,```,,,,````-`-`,,`,,`,`,,`---
Copyright International Organization for Standardization
Provided by IHS under license with ISO
No reproduction or networking permitted without license from IHS Not for Resale

15.2.5 SCAN command

The SCAN command (see table 290) requests the target begin a scan operation.

Table 290 - SCAN command

Bit / Byte	7	6	5	4	3	2	1	0
0	Operation code (1Bh)							
1	Logical unit number			Reserved				
2	Reserved							
3	Reserved							
4	Transfer length							
5	Control							

The transfer length specifies the length in bytes of the window identifier list that shall be sent during the DATA OUT phase. A transfer length of zero indicates that no data shall be transferred. This condition shall not be considered an error.

The window identifier list consists of zero or more window identifiers, each of which specifies a window to be scanned.

15.2.6 SEND command

The SEND command (see table 291) transfers data from the initiator to the target.

Table 291 - SEND command

Bit / Byte	7	6	5	4	3	2	1	0
0	Operation code (2Ah)							
1	Logical unit number			Reserved				
2	Data type code							
3	Reserved							
4	(MSB) Data type qualifier							
5								(LSB)
6	(MSB) Transfer length							
7								
8								(LSB)
9	Control							

The data type code and data type qualifier are defined in the READ command (see 15.2.4).

Copyright International Organization for Standardization
Provided by IHS under license with ISO
No reproduction or networking permitted without license from IHS Not for Resale

The transfer length specifies the number of blocks the target shall transfer from the initiator during the DATA OUT phase. The block size is the current block size in the mode parameters block descriptor (see 8.3.3). A transfer length of zero is not considered an error and no data shall be transferred.

This command shall be terminated with a status of RESERVATION CONFLICT if any reservation access conflict (see 10.2.10) exists, and no data shall be transferred.

15.2.7 SET WINDOW command

The SET WINDOW command (see table 292) provides a means for the initiator to specify one or more windows within the scanning range of the device.

Table 292 - SET WINDOW command

Bit / Byte	7	6	5	4	3	2	1	0
0	Operation code (24H)							
1	Logical unit number			Reserved				
2	Reserved							
3	Reserved							
4	Reserved							
5	Reserved							
6	(MSB)							
7	Transfer length							
8								(LSB)
9	Control							

The transfer length specifies the length, in bytes, of the data that shall be sent during the DATA OUT phase. A transfer length of zero indicates that no window parameters data shall be transferred. This condition shall not be considered an error.

The window parameters data shall consist of a header followed by one or more window descriptors. Each window descriptor specifies the location, size, and scanning method used for a window.

The set window data header is defined in table 293.

Copyright International Organization for Standardization
Provided by IHS under license with ISO
No reproduction or networking permitted without license from IHS Not for Resale

Table 293 - Set window data header

Bit / Byte	7	6	5	4	3	2	1	0
0	Reserved							
1	Reserved							
2	Reserved							
3	Reserved							
4	Reserved							
5	Reserved							
6	(MSB)			Window descriptor length				
7								(LSB)

The window descriptor length specifies the length, in bytes, of a single window descriptor. Each descriptor shall be of equal length. The first 48 bytes are defined in this International Standard and the remaining bytes in each descriptor are vendor-specific.

See table 282 for the definition of a window descriptor.

15.3 Parameters for scanner devices

15.3.1 Diagnostic parameters

This subclause defines the descriptors and pages for diagnostic parameters used with scanner devices.

The diagnostic page codes for scanner devices are defined in table 294.

Table 294 - Diagnostic page codes

Page code	Description	Subclause
00h	Supported diagnostic pages	8.3.1.1
01h - 7Fh	Reserved	
80h - FFh	Vendor-specific pages	

15.3.2 Log parameters

This subclause defines the descriptors and pages for log parameters used with scanner devices.

The log page codes for scanner devices are defined in table 295.

Copyright International Organization for Standardization
Provided by IHS under license with ISO
No reproduction or networking permitted without license from IHS Not for Resale

Table 295 - Log page codes

Page code	Description	Subclause
01h	Buffer over-run/under-run page	8.3.2.1
03h	Error counter (read) page	8.3.2.2
07h	Last n error events page	8.3.2.3
06h	Non-medium error page	8.3.2.4
00h	Supported log pages	8.3.2.5
08h - 2Fh	Reserved	
3Fh	Reserved	
30h - 3Eh	Vendor-specific pages	

15.3.3 Mode parameters

This subclause defines the descriptors and pages for mode parameters used with scanner devices.

The mode parameter list, including the mode parameter header and mode block descriptor, is defined in 8.3.3.

The medium-type code field is contained in the mode parameter header (see 8.3.3). This field is reserved for scanners devices.

The device specific parameter field is contained in the mode parameter header (see 8.3.3). This field is reserved for scanner devices.

The density code field is contained in the mode parameter block descriptor (see table 8.3.3). This field is reserved for scanner devices.

The mode page codes for scanner devices are defined in table 296.

Table 296 - Mode page codes

Page code	Description	Subclause
0Ah	Control mode page	8.3.3.1
02h	Disconnect-reconnect page	8.3.3.2
03h	Measurement units page	15.3.3.1
09h	Peripheral device page	8.3.3.3
01h	Reserved	
03h - 08h	Reserved	
0Bh - 1Fh	Reserved	
00h	Vendor-specific (does not require page format)	
20h - 3Eh	Vendor-specific (page format required)	
3Fh	Return all pages (valid only for the MODE SENSE command)	

15.3.3.1 Measurement units page

The measurement units page (see table 297) specifies the units of measurement used for calculating the displacement of window and for positioning an object.

The measurement units are independent of the horizontal and vertical scan resolutions.

Copyright International Organization for Standardization
Provided by IHS under license with ISO
No reproduction or networking permitted without license from IHS Not for Resale

Table 297 - Measurement units page

Bit / Byte	7	6	5	4	3	2	1	0
0	PS	Reserved	Page code (03h)					
1	Parameter length (06h)							
2	Basic measurement unit							
3	Reserved							
4	(MSB) Measurement unit divisor							
5	(LSB)							
6	Reserved							
7	Reserved							

The parameters savable (PS) bit is only used with the MODE SENSE command. This bit is reserved for the MODE SELECT command. A PS bit of one indicates that the target is capable of saving the page in a non-volatile vendor-specific location.

The basic measurement unit field is defined in table 298. Targets shall use inches as the default basic measurement unit.

Table 298 - Basic measurement units

Code	Description
00h	Inch
01h	Millimetre
02h	Point
03h - FFh	Reserved

The measurement unit divisor specifies the number of units needed to equal one basic measurement unit. Targets shall use 1 200 as the default measurement unit divisor. If a value of zero is specified the target shall return CHECK CONDITION status and set the sense key to ILLEGAL REQUEST.

NOTE 194 A target that does not implement this page or only supports default values uses twelve hundredths (1/1200) of an inch as the unit of measure.

Copyright International Organization for Standardization
Provided by IHS under license with ISO
No reproduction or networking permitted without license from IHS Not for Resale

15.4 Definitions specific to scanner devices

15.4.1 base element line: An *x*-axis displacement equal to zero.

15.4.2 base line: An *y*-axis displacement equal to zero.

15.4.3 beginning-of-medium: A *x*-axis and *y*-axis of zero displacement. Alternatively this is being positioned at the intersection of the base and scan lines.

15.4.4 end-of-medium: The maximum *x*-axis and *y*-axis displacement.

15.4.5 image: The digital result of a scan.

15.4.6 object: The original or item being scanned.

15.4.7 pixel: Picture-element, which is the smallest photo sight in the array.

15.4.8 platen: The surface on which the target is positioned.

15.4.9 scan: An operation that generates a digital image from the reflected light of an object.

15.4.10 scan line: A *y*-axis displacement from the base line.

15.4.11 scanning range: The total area that a scanner can generate an image from. For two dimensional objects this may correspond to the largest object that can be scanned.

15.4.12 window: All or part of the scanning range of a scanner. A window defines the part of the object scanned.

Copyright International Organization for Standardization
Provided by IHS under license with ISO
No reproduction or networking permitted without license from IHS Not for Resale

16 Optical memory devices

16.1 Model for optical memory devices

An optical memory device is a device that can potentially support a variety of optical media, (e.g. read-only, write-once, erasable, or reversible). In several respects, an optical memory device is similar to a direct-access device. However, optical memory devices typically offer features that are not available with other devices, including very large capacity removable media.

These devices often require the functions that are not found in direct-access devices such as logical block update, pre-erasure before writing, or scanning for blank medium and twelve-byte command descriptor blocks. This International Standard has specific device types for write-once and CD-ROM devices that also use optical media, but are not capable of supporting several types of optical media. A device that uses write-once media can be an optical memory device. Devices that use read-only media can be optical memory devices; however, devices using CD-ROM media have certain unique characteristics and should not be implemented as optical memory devices.

A model of optical memory devices is complicated by the nature of one of its potential advantages, that it can support media which has different characteristics. There are three types of optical media in general use, read-only, write-once and reversible. Read-only media are typically used for publishing applications requiring dissemination of large amounts of data, since the data can be replicated on a disk at low cost. Write-once media are used in applications that have large backup or archiving requirements. It is also used in applications that need large amounts of on-line reference information. Reversible media is typically used in applications that need large amounts of temporary storage (e.g. a graphics workstation), and can take advantage of removable media. In some applications, reversible media drives are used in place of direct-access devices.

Reversible media usually need to be reversed (erased, blanked) before new data can be written. In such cases an erase operation is required before data can be written. Some optical memory devices perform this erase operation implicit with each write operation that typically impacts the data throughput. Some devices can perform the erase separately. The ERASE command may be used to erase areas of the medium with a corresponding increase in data throughput on subsequent write operations. Products using optical media should not be implemented as direct-access devices, due to the overhead penalty on performance from the emulation and the lack of support in direct-access devices to take advantage of the sophisticated features available with optical memory devices.

The type of medium supported by the device and the type of medium currently loaded can be determined by examining the MODE SENSE data. One unique feature of optical memory devices is support of media with mixed types (e.g. media with read-only and write-once areas). The INQUIRY command informs the initiator that the target is an optical memory device; the initiator should then determine the medium type from the MODE SENSE data. The initiator needs to be cognizant of medium type since the device's characteristics can change when the media are changed.

Write-once media can have valid data written to a logical block once. This is an important feature where audit trails and permanent archives are needed. Many optical memory devices supporting write-once media have the ability to update a logical block, preserving the previous generation of data. These devices usually provide a means to recover the previous data through use of commands that allow read access to the different generations of data that are stored at the same logical block address.

An important requirement in dealing with optical media is determining which logical blocks contain written data and which are blank. A blank logical block is one that is properly initialized so that data written to it can be recovered. The logical blocks usually have a flag associated with each that indicates whether they have been written or not.

Copyright International Organization for Standardization
Provided by IHS under license with ISO
No reproduction or networking permitted without license from IHS Not for Resale

Many of the strategies used to manage write once and erasable media depend on being able to determine the boundary between written and blank areas of the medium. The MEDIUM SCAN command is useful in finding blank areas for subsequent write operations.

16.1.1 Defect management

Defect management can be performed on logical blocks by updating in a manner similar to that used by direct-access devices with the REASSIGN BLOCKS command. The advantage of using the updating (which is not supported by direct-access devices) is access to the previous data.

The update operation assigns an alternate physical block to the logical block while simultaneously writing the data to the block. Commands are provided to allow the recovery of previous generations of updated blocks.

Defect management on optical-memory devices is usually vendor-specific. However there are standards for some types of optical-memory media that specify defect management techniques. These standards, where they exist, may supersede the implementation requirements pertaining to error and defect reporting in this International Standard.

16.1.2 Error reporting

If any of the following conditions occur during the execution of a command the target shall return CHECK CONDITION status. The appropriate sense key and additional sense code should be set. The following list illustrates some error conditions and the applicable sense keys. The list does not provide an exhaustive enumeration of all conditions that may cause the CHECK CONDITION status.

Condition	Sense Key
Invalid logical block address	ILLEGAL REQUEST
Unsupported option requested	ILLEGAL REQUEST
Target reset or medium change since last command from this initiator	UNIT ATTENTION
Self diagnostic failed	HARDWARE ERROR
Unrecovered read error	MEDIUM ERROR HARDWARE ERROR
Recovered read error	RECOVERED ERROR
Overrun or other error that might be resolved by repeating the command	ABORTED COMMAND
Attempt to write on write protected medium	DATA PROTECT
Attempt to read a blank or previously unwritten block	BLANK CHECK
Attempt to write a previously written block and blank checking is enabled	BLANK CHECK
Attempt to write on read-only medium	DATA PROTECT

In the case of an invalid logical block address, the sense data information field shall be set to the logical block address of the first invalid address.

In the case of an attempt to read a blank or previously unwritten block, the sense data information field shall be set to the logical block address of the first blank block encountered. The data read up to that block shall be transferred.

Copyright International Organization for Standardization
Provided by IHS under license with ISO
No reproduction or networking permitted without license from IHS Not for Resale

In the case of an attempt to write a previously written block when blank checking is enabled, the sense information field shall be set to the logical block address of the first non-blank block encountered.

16.2 Commands for optical memory devices

The commands for optical memory devices shall be as shown in table 299.

Table 299 - Commands for optical memory devices

Command name	Operation code	Type	Subclause
CHANGE DEFINITION	40h	O	8.2.1
COMPARE	39h	O	8.2.2
COPY	18h	O	8.2.3
COPY AND VERIFY	3Ah	O	8.2.4
ERASE(10)	2Ch	O	16.2.1
ERASE(12)	ACh	O	16.2.2
FORMAT UNIT	04h	O	9.2.1
INQUIRY	12h	M	8.2.5
LOCK UNLOCK CACHE	36h	O	9.2.2
LOG SELECT	4Ch	O	8.2.6
LOG SENSE	4Dh	O	8.2.7
MEDIUM SCAN	38h	O	16.2.3
MODE SELECT(06)	15h	O	8.2.8
MODE SELECT(10)	55h	O	8.2.9
MODE SENSE(06)	1Ah	O	8.2.10
MODE SENSE(10)	5Ah	O	8.2.11
PRE-FETCH	34h	O	9.2.3
PREVENT ALLOW MEDIUM REMOVAL	1Eh	O	9.2.4
READ(06)	08h	O	9.2.5
READ(10)	28h	M	9.2.6
READ(12)	A8h	O	16.2.4
READ BUFFER	3Ch	O	8.2.12
READ CAPACITY	25h	M	9.2.7
READ DEFECT DATA(10)	37h	O	9.2.8
READ DEFECT DATA(12)	B7h	O	16.2.5
READ GENERATION	29h	O	16.2.6
READ LONG	3Eh	O	9.2.9
READ UPDATED BLOCK	2Dh	O	16.2.7
REASSIGN BLOCKS	07h	O	9.2.10
RECEIVE DIAGNOSTIC RESULTS	1Ch	O	8.2.13
RELEASE	17h	M	9.2.11
REQUEST SENSE	03h	M	8.2.14
RESERVE	16h	M	9.2.12
REZERO UNIT	01h	O	9.2.13
SEARCH DATA EQUAL(10)	31h	O	9.2.14.1
SEARCH DATA EQUAL(12)	B1h	O	16.2.8
SEARCH DATA HIGH(10)	30h	O	9.2.14.2
SEARCH DATA HIGH(12)	B0h	O	16.2.8
SEARCH DATA LOW(12)	B2h	O	16.2.8
SEARCH DATA LOW(10)	32h	O	9.2.14.3
SEEK(06)	0Bh	O	9.2.15
SEEK(10)	2Bh	O	9.2.15
SEND DIAGNOSTIC	1Dh	M	8.2.15
SET LIMITS(10)	33h	O	9.2.16
SET LIMITS(12)	B3h	O	16.2.9
START STOP UNIT	1Bh	O	9.2.17
SYNCHRONIZE CACHE	35h	O	9.2.18
TEST UNIT READY	00h	M	8.2.16
UPDATE BLOCK	3Dh	O	16.2.10
VERIFY(10)	2Fh	O	16.2.11
VERIFY(12)	AFh	O	16.2.12
WRITE(06)	0Ah	O	9.2.20
WRITE(10)	2Ah	M	16.2.13
WRITE(12)	AAh	O	16.2.14
WRITE AND VERIFY(10)	2Eh	O	16.2.15
WRITE AND VERIFY(12)	AEh	O	16.2.16
WRITE BUFFER	3Bh	O	8.2.17
WRITE LONG	3Fh	O	9.2.23

Key: M = command implementation is mandatory.
O = command implementation is optional.

The following codes are vendor-specific: 20h, 21h, 22h, 23h, and C0h through FFh. All remaining codes for optical memory devices are reserved for future standardization.

Copyright International Organization for Standardization
Provided by IHS under license with ISO
No reproduction or networking permitted without license from IHS Not for Resale

16.2.1 ERASE(10) command

The ERASE(10) command (see table 300) requests that the target erase the specified number of blocks starting at the specified logical block address on the medium. As used here, erased means either the medium shall be erased, or a pattern shall be written on the medium that appears to the target as no data present. The blocks erased shall be considered blank for purposes of blank checking (see 16.1). The previous data recorded on the medium, if any, shall not be recoverable.

Table 300 - ERASE(10) command

Bit / Byte	7	6	5	4	3	2	1	0
0	Operation code (2Ch)							
1	Logical unit number			Reserved		ERA	Reserved	RelAdr
2	(MSB)							
3				Logical block address				
4								
5								(LSB)
6	Reserved							
7	(MSB)							
8				Transfer length				(LSB)
9	Control							

The erase all (ERA) bit set to one indicates that all remaining blocks on the medium shall be erased. If the ERA bit is set to one and if the number of blocks is not zero, the target shall return CHECK CONDITION, and the sense key shall be set to ILLEGAL REQUEST, with an additional sense code of INVALID FIELD IN CDB.

See 9.2.2 for a description of the RelAdr bit and logical block address field.

The transfer length specifies the number of contiguous logical blocks that shall be erased when the ERA bit is zero. If the ERA bit is zero a transfer length of zero indicates that no blocks shall be erased. This condition shall not be considered an error and no data shall be erased. Any other value indicates the number of logical blocks that shall be erased.

This command shall be terminated with a status of RESERVATION CONFLICT if any reservation access conflict (see 9.2.12) exists and no data shall be erased.

NOTE 195 This command allows the user to separate the erase and write operations. This may increase system performance in certain applications.

Copyright International Organization for Standardization
Provided by IHS under license with ISO
No reproduction or networking permitted without license from IHS
Not for Resale

16.2.2 ERASE(12) command

The ERASE(12) command (see table 301) requests that the target erase the specified number of blocks starting at the specified logical block address on the medium.

Table 301 - ERASE(12) command

Bit / Byte	7	6	5	4	3	2	1	0
0	Operation code (ACh)							
1	Logical unit number			Reserved		ERA	Reserved	RelAdr
2	(MSB)							
3	Logical block address							
4								
5								(LSB)
6	(MSB)							
7	Transfer length							
8								
9								(LSB)
10	Reserved							
11	Control							

See the ERASE(10) command (16.2.1) for a description of the fields in this command.

16.2.3 MEDIUM SCAN command

The MEDIUM SCAN command (see table 302) requests that the target scan the medium for a contiguous set of written or blank logical blocks.

Table 302 - MEDIUM SCAN command

Bit / Byte	7	6	5	4	3	2	1	0
0	Operation code (38h)							
1	Logical unit number			WBS	ASA	RSD	PRA	RelAdr
2	(MSB)							
3	Logical block address							
4								
5								(LSB)
6	Reserved							
7	Reserved							
8	Parameter list length							
9	Control							

Copyright International Organization for Standardization
Provided by IHS under license with ISO
No reproduction or networking permitted without license from IHS
Not for Resale

A written block search (WBS) bit of zero indicates that the scan is for blank blocks. A WBS bit of one indicates that the scan is for written blocks.

An advanced scan algorithm (ASA) bit of zero indicates that the scan area is scanned in sequential order (as selected by the RSD bit). An ASA bit of one indicates to the target that the written and blank areas within the scan area form contiguous extents (as opposed to scattered blocks). This indication is advisory to the target.

NOTE 196 The purpose of this bit is to allow the target to use a more advanced algorithm (such as a binary search) to locate the requested blocks.

A reverse scan direction (RSD) bit of zero indicates the scan shall begin with the first logical block of the scan area. A RSD bit of one indicates the scan shall begin with the last logical block of the scan area.

A partial results acceptable (PRA) bit of zero indicates that the scan shall not be considered satisfied until a contiguous set of blocks is found within the scan area that is at least equal in size to the number of blocks requested, and meets the other criteria specified in the command descriptor block. A PRA bit of one indicates that the scan may be satisfied by a contiguous set of blocks within the scan area that is less than the number of blocks requested, and meets the other criteria specified in the command descriptor block.

See 9.2.2 for a description of the RelAdr bit and logical block address field.

The parameter list length specifies the length in bytes of the parameter list that shall be transferred during the DATA OUT phase. A parameter list length of zero indicates that the number of blocks requested field has a value of one, and the number of blocks to scan field has a value of zero. This condition shall not be considered an error. The contents of the parameter list are specified in table 303.

Table 303 - MEDIUM SCAN parameter list

Bit / Byte	7	6	5	4	3	2	1	0
0	(MSB)							
1								
2				Number of blocks requested				
3								(LSB)
4	(MSB)							
5								
6				Number of blocks to scan				
7								(LSB)

A link bit of zero indicates a non-linked command; if the scan is satisfied, the command shall be terminated with an INTERMEDIATE-CONDITION MET status. A REQUEST SENSE command can then be issued to determine the starting logical block address of the area that meets the request. If the scan is not satisfied and no error occurs, the command shall be terminated with GOOD status.

A link bit of one indicates that a command is linked to the MEDIUM SCAN command; if the search is satisfied, INTERMEDIATE-CONDITION MET status is returned and the next command is executed. If the RelAdr bit in the next command is one, the logical block address of the next command is used as a displacement from the logical block address at which the search was satisfied. If a linked scan is not satisfied, the command is terminated with a CHECK CONDITION status. A REQUEST SENSE command may then be issued.

A REQUEST SENSE command following a satisfied MEDIUM SCAN command shall:

Copyright International Organization for Standardization
Provided by IHS under license with ISO
No reproduction or networking permitted without license from IHS Not for Resale

a) return a sense key of EQUAL if the scan was satisfied by a contiguous set of blocks equal in size to the number of blocks requested. If the PRA bit is one and the scan was satisfied by a contiguous set of blocks less than the number of blocks requested, then a sense key of NO SENSE shall be returned;
b) return the valid bit set to one;
c) return the logical block address of the first logical block of the contiguous set of blocks that satisfied the scan criteria in the information bytes;
d) return the number of contiguous logical blocks meeting the scan criteria in the command specific information bytes.

A REQUEST SENSE command following an unsatisfied MEDIUM SCAN command shall:
a) return a sense key of NO SENSE if no errors occurred during the command execution;
b) return the valid bit set to zero.

The number of blocks requested field specifies the number of blocks that meet the specified requirements. The number of blocks requested field, if set to zero, indicates that the scan shall not take place. This shall not be considered an error condition.

The number of blocks to scan field specifies the length in blocks of the area to be scanned on the medium. The number of blocks to scan field, if set to zero, indicates that the scan shall continue for all remaining blocks on the medium or until the scan is satisfied. See 16.1.2 for a description of error reporting.

16.2.4 READ(12) command

The READ(12) command (see table 304) requests that the target transfer data to the initiator from the medium. See the READ(10) command (9.2.6) for a complete description of the fields in this command.

Table 304 - READ(12) command

Bit / Byte	7	6	5	4	3	2	1	0
0	Operation code (A8h)							
1	Logical unit number			DPO	FUA	Reserved		RelAdr
2	(MSB)							
3								
4				Logical block address				
5								(LSB)
6	(MSB)							
7								
8				Transfer length				
9								(LSB)
10	Reserved							
11	Control							

Copyright International Organization for Standardization
Provided by IHS under license with ISO
No reproduction or networking permitted without license from IHS Not for Resale

16.2.5 READ DEFECT DATA(12) command

The READ DEFECT DATA(12) command (see table 305) requests that the target transfer the medium defect data to the initiator. See the READ DEFECT DATA(10) command (9.2.8) for a description of the fields in this command.

Table 305 - READ DEFECT DATA(12) command

Bit / Byte	7	6	5	4	3	2	1	0
0	Operation code (B7h)							
1	Logical unit number			Plist	Glist	Defect list format		
2	Reserved							
3	Reserved							
4	Reserved							
5	Reserved							
6	(MSB)							
7	Allocation length							
8								
9								(LSB)
10	Reserved							
11	Control							

The READ DEFECT DATA(12) list header (see table 306) contains an eight byte header, followed by zero or more defect descriptors.

Table 306 - READ DEFECT DATA(12) list header

Bit / Byte	7	6	5	4	3	2	1	0
0	Reserved							
1	Reserved			Plist	Glist	Defect list format		
2	Reserved							
3	Reserved							
4	(MSB)							
5	Defect list length							
6								
7								(LSB)
Defect descriptors								
0								
n								

Copyright International Organization for Standardization
Provided by IHS under license with ISO
No reproduction or networking permitted without license from IHS Not for Resale

See the description of the READ DEFECT DATA defect list (see 9.2.1.1) for a description of the fields in this header.

16.2.6 READ GENERATION command

The READ GENERATION command (see table 307) requests that the target transfer to the initiator the maximum generation address for the logical block specified.

Table 307 - READ GENERATION command

Bit / Byte	7	6	5	4	3	2	1	0
0	Operation code (29h)							
1	Logical unit number			Reserved				RelAdr
2	(MSB)							
3				Logical block address				
4								
5								(LSB)
6	Reserved							
7	Reserved							
8	Allocation length							
9	Control							

See 9.2.2 for a description of the RelAdr bit and logical block address field.

The READ GENERATION data is defined in table 308.

Table 308 - Maximum generation data block

Bit / Byte	7	6	5	4	3	2	1	0
0	(MSB)							
1				Maximum generation address				(LSB)
2	Reserved							
3	Reserved							

The maximum generation address field defines the maximum generation address available for the logical block address specified.

Copyright International Organization for Standardization
Provided by IHS under license with ISO
No reproduction or networking permitted without license from IHS Not for Resale

16.2.7 READ UPDATED BLOCK(10) command

The READ UPDATED BLOCK(10) command (see table 309) requests that the target transfer data to the initiator from the specified generation and logical block.

Table 309 - READ UPDATED BLOCK(10) command

Bit / Byte	7	6	5	4	3	2	1	0
0	Operation code (2Dh)							
1	Logical unit number			DPO	FUA	Reserved		RelAdr
2	(MSB)							
3				Logical block address				
4								
5								(LSB)
6	Latest	(MSB)						
7				Generation address				(LSB)
8	Reserved							
9	Control							

See 9.2.6 for a description of the cache control bits (DPO and FUA). See 9.2.2 for a description of the RelAdr bit and logical block address field.

One block of data is transferred during the DATA IN phase.

The latest bit determines the meaning of the generation address field. A latest bit of zero indicates that the generation address is specified relative to the first generation of the block; generation address zero specifies the first generation. Increasing generation addresses specify later generations.

A latest bit of one indicates that the generation address is specified relative to the latest generation of the block; generation address zero specifies the most recent generation. Increasing generation addresses specify earlier generations.

If the requested generation does not exist, the command shall be terminated with CHECK CONDITION status. The sense key shall be set to BLANK CHECK, and the additional sense code shall be set to GENERATION DOES NOT EXIST.

This command shall be terminated with a status of RESERVATION CONFLICT if any reservation access conflict (see 9.2.12) exists and no data shall be transferred.

Copyright International Organization for Standardization
Provided by IHS under license with ISO
No reproduction or networking permitted without license from IHS Not for Resale

16.2.8 SEARCH DATA(12) commands

The SEARCH DATA(12) commands (see table 310) search one or more logical blocks for equality or inequality to a data pattern. See the SEARCH DATA(10) commands (9.2.14) for a description of the fields in this command.

Table 310 - SEARCH DATA(12) commands

Bit / Byte	7	6	5	4	3	2	1	0
0	Operation code (B0h, B1h, B2h)							
1	Logical unit number			Invert	Reserved		SpnDat	RelAdr
2	(MSB)							
3				Logical block address				
4								
5								(LSB)
6	(MSB)							
7				Transfer length				
8								
9								(LSB)
10	Reserved							
11	Control							

16.2.9 SET LIMITS(12) command

The SET LIMITS(12) command (see table 311) defines the range within which subsequent linked commands may operate. See the SET LIMITS(10) command (9.2.16) for a description of the fields in this command.

Copyright International Organization for Standardization
Provided by IHS under license with ISO
No reproduction or networking permitted without license from IHS Not for Resale

Table 311 - SET LIMITS(12) command

Bit / Byte	7	6	5	4	3	2	1	0
0	Operation code (B3h)							
1	Logical unit number			Reserved			RdInh	WrInh
2	(MSB)							
3				Logical block address				
4								
5								(LSB)
6	(MSB)							
7				Number of blocks				
8								
9								(LSB)
10	Reserved							
11	Control							

16.2.10 UPDATE BLOCK command

The UPDATE BLOCK command (see table 312) requests that the target logically replace data on the medium with the data sent during the DATA OUT phase.

Table 312 - UPDATE BLOCK command

Bit / Byte	7	6	5	4	3	2	1	0
0	Operation code (3Dh)							
1	Logical unit number			Reserved				RelAdr
2	(MSB)							
3				Logical block address				
4								
5								(LSB)
6	Reserved							
7	Reserved							
8	Reserved							
9	Control							

See 9.2.2 for a description of the RelAdr bit and logical block address field.

One block of data is transferred during the DATA OUT phase.

Copyright International Organization for Standardization
Provided by IHS under license with ISO
No reproduction or networking permitted without license from IHS Not for Resale

NOTE 197 See the MODE Parameters (16.3) for a description of the behaviour of the UPDATE BLOCK command relative to the enable blank check (EBC) bit.

This International Standard does not define the result of a WRITE command issued to a block previously updated by an UPDATE BLOCK command when blank checking is disabled.

NOTE 198 It is recommended that the target inhibit this behaviour.

A logical block may be updated until the alternate block area is exhausted. The alternate blocks used for the update operation shall not be reported in the READ CAPACITY data. If the alternate block area is exhausted, the command shall be terminated with CHECK CONDITION and the sense key shall be set to MEDIUM ERROR, and the additional sense code set to NO DEFECT SPARE LOCATION AVAILABLE.

If the report updated block read parameter specifies posting of recovered errors for a read operation of a logical block that has had a successful update operation performed, occurs the command shall terminate with a CHECK CONDITION status. The sense key shall be set to RECOVERED ERROR and the additional sense code set to UPDATED BLOCK READ.

16.2.11 VERIFY(10) command

The VERIFY command (see table 313) requests that the target verify the data on the medium.

Table 313 - VERIFY command

Bit / Byte	7	6	5	4	3	2	1	0
0	Operation code (2Fh)							
1	Logical unit number			DPO	Reserved	BlkVfy	BytChk	RelAdr
2	(MSB)							
3				Logical block address				
4								
5								(LSB)
6	Reserved							
7	(MSB)							
8				Verification length				(LSB)
9	Control							

If the MODE SELECT command is implemented, and the Verify Error Recovery Parameters page is also implemented, then the current settings in that page define the verification criteria. If the Verify Error Recovery Parameters page is not implemented, then the verification criteria is vendor-specific.

A byte check (BytChk) bit of zero causes a medium verification to be performed with no data comparison. A BytChk bit of one causes a byte-by-byte compare of the data written on the medium and the data transferred from the initiator. The data shall be transferred as it would be for a WRITE command. If the compare is unsuccessful, for any reason, the target shall return CHECK CONDITION status and the sense key shall be set to MISCOMPARE.

A blank verify (BlkVfy) bit of one causes a verification that the blocks are blank.

Copyright International Organization for Standardization
Provided by IHS under license with ISO
No reproduction or networking permitted without license from IHS Not for Resale

If the BytChk is one when the BlkVfy bit is one, this shall be considered an error. The target shall return CHECK CONDITION status and the sense key shall be set to ILLEGAL REQUEST, and the additional sense code set to INVALID FIELD IN CDB.

See 9.2.6 for a description of the cache control bits (DPO). See 9.2.2 for a description of the RelAdr bit and logical block address field.

The verification length specifies the number of contiguous logical blocks of data or blanks that shall be verified. A verification length of zero indicates that no logical blocks shall be verified. This condition shall not be considered as an error. Any other value indicates the number of logical blocks that shall be verified.

16.2.12 VERIFY(12) command

The VERIFY(12) command (see table 314) requests that the target verify the data on the medium. See the VERIFY(10) command (16.2.11) for a description of the fields in this command.

Table 314 - VERIFY(12) command

Bit / Byte	7	6	5	4	3	2	1	0
0	Operation code (AFh)							
1	Logical unit number			DPO	Reserved	BlkVfy	BytChk	RelAdr
2	(MSB)							
3				Logical block address				
4								
5								(LSB)
6	(MSB)							
7				Verification length				
8								
9								(LSB)
10	Reserved							
11	Control							

Copyright International Organization for Standardization
Provided by IHS under license with ISO
No reproduction or networking permitted without license from IHS Not for Resale

16.2.13 WRITE(10) command

The WRITE(10) command (see table 315) requests that the target write the data transferred from the initiator to the medium.

Table 315 - WRITE(10) command

Bit / Byte	7	6	5	4	3	2	1	0
0	Operation code (2Ah)							
1	Logical unit number			DPO	FUA	EBP	Reserved	RelAdr
2	(MSB)							
3				Logical block address				
4								
5								(LSB)
6	Reserved							
7	(MSB)							
8				Transfer length				(LSB)
9	Control							

An erase by-pass (EBP) bit of zero indicates that the device will default to the normal write operation. An EBP bit of one indicates that the target is allowed to by-pass the erase operation prior to writing the data. When accessing write-once media, the EBP bit shall be considered reserved.

See 9.2.6 for a description of the cache control bits (DPO and FUA). See 9.2.2 for a description of the RelAdr bit and logical block address field.

The transfer length specifies the number of contiguous logical blocks of data that shall be transferred. A transfer length of zero indicates that no data shall be transferred. This condition shall not be considered an error and no data shall be written. Any other value indicates the number of logical blocks that shall be transferred.

This command shall be terminated with a status of RESERVATION CONFLICT if any reservation access conflict (see 9.2.12) exists, and no data shall be written.

Copyright International Organization for Standardization
Provided by IHS under license with ISO
No reproduction or networking permitted without license from IHS Not for Resale

16.2.14 WRITE(12) command

The WRITE(12) command (see table 316) requests that the target write the data transferred from the initiator to the medium. See the WRITE(10) command (16.2.13) for a description of the fields in this command.

Table 316 - WRITE(12) command

Bit / Byte	7	6	5	4	3	2	1	0
0	Operation code (AAh)							
1	Logical unit number			DPO	FUA	EBP	Reserved	RelAdr
2	(MSB)							
3				Logical block address				
4								
5								(LSB)
6	(MSB)							
7				Transfer length				
8								
9								(LSB)
10	Reserved							
11	Control							

16.2.15 WRITE AND VERIFY(10) command

The WRITE AND VERIFY(10) command (see table 317) requests that the target write the data transferred from the initiator to the medium and then verify that the data is correctly written.

Table 317 - WRITE AND VERIFY(10) command

Bit / Byte	7	6	5	4	3	2	1	0
0	Operation code (2Eh)							
1	Logical unit number			DPO	Reserved	EBP	BytChk	RelAdr
2	(MSB)							
3				Logical block address				
4								
5								(LSB)
6	Reserved							
7	(MSB)							
8				Transfer length				(LSB)
9	Control							

Copyright International Organization for Standardization
Provided by IHS under license with ISO
No reproduction or networking permitted without license from IHS
Not for Resale

If the MODE SELECT command is implemented, and the Verify Error Recovery Parameters page is also implemented, then the current settings in that page define the verification criteria. If the Verify Error Recovery Parameters page is not implemented, then the verification criteria is vendor-specific.

A byte check (BytChk) bit of zero causes a medium verification to be performed with no data comparison. A BytChk bit of one causes a byte-by-byte compare of the data written on the medium and the data transferred from the initiator. The data shall be transferred as it would be for a WRITE command. If the compare is unsuccessful, for any reason, the target shall return CHECK CONDITION status and the sense key shall be set to MISCOMPARE.

An erase by-pass (EBP) bit of zero indicates that the device will default to the normal write operation. An EBP bit of one indicates that the target is allowed to by-pass the erase operation prior to writing the data. When accessing write-once media, the EBP bit shall be considered reserved.

See 9.2.6 for a description of the cache control bits (DPO). See 9.2.2 for a description of the RelAdr bit and logical block address field.

The transfer length specifies the number of contiguous logical blocks of data that shall be transferred. A transfer length of zero indicates that no logical blocks shall be transferred. This condition shall not be considered as an error and no data shall be written. Any other value indicates the number of logical blocks that shall be transferred.

16.2.16 WRITE AND VERIFY(12) command

The WRITE AND VERIFY(12) command (see table 318) requests that the target write the data transferred from the initiator to the medium and then verify that the data is correctly written. See the WRITE AND VERIFY(10) command (16.2.15) for a description of the bits in this command.

Table 318 - WRITE AND VERIFY(12) command

Bit / Byte	7	6	5	4	3	2	1	0
0	Operation code (AEh)							
1	Logical unit number			DPO	Reserved	EBP	BytChk	RelAdr
2	(MSB)							
3				Logical block address				
4								
5								(LSB)
6	(MSB)							
7				Transfer length				
8								
9								(LSB)
10	Reserved							
11	Control							

Copyright International Organization for Standardization
Provided by IHS under license with ISO
No reproduction or networking permitted without license from IHS Not for Resale

16.3 Parameters for optical memory devices

16.3.1 Diagnostic parameters

This subclause defines the descriptors and pages for diagnostic parameters used with optical memory devices.

The diagnostic page codes for optical memory devices are defined in table 319.

Table 319 - Diagnostic page codes

Page code	Description	Subclause
00h	List of supported parameters page	8.3.1.1
01h - 3Fh	Reserved (for all device type pages)	
40h	Translate address page	9.3.1
41h - 7Fh	Reserved	
80h - FFh	Vendor-specific pages	

16.3.2 Log parameters

This subclause defines the descriptors and pages for log parameters used with optical memory devices.

The log page codes for optical memory devices are defined in table 320.

Table 320 - Log page codes

Page code	Description	Subclause
01h	Buffer over-run/under-run page	8.3.2.1
03h	Error counter (read) page	8.3.2.2
05h	Error counter (verify) page	8.3.2.2
02h	Error counter (write) page	8.3.2.2
07h	Last n error events page	8.3.2.3
00h	List of supported parameters page	8.3.2.5
06h	Non-media error page	8.3.2.4
04h	Reserved	
08h - 2Fh	Reserved	
30h - 3Eh	Vendor-specific	
3Fh	Reserved	

16.3.3 Mode parameters

This subclause defines the descriptors and pages for mode parameters used with optical memory devices.

The mode parameter list, including the mode parameter header and mode block descriptor, are defined in 8.3.3.

The medium-type code field is contained in the mode parameter header (see 8.3.3). Table 321 defines the medium-type code values used for optical memory devices.

Copyright International Organization for Standardization
Provided by IHS under license with ISO
No reproduction or networking permitted without license from IHS Not for Resale

Table 321 - Optical memory medium-type codes

Code	Description
00h	Default (only one medium type supported)
01h	Optical read-only medium
02h	Optical write-once medium
03h	Optical reversible or erasable medium
04h	Combination of read-only and write-once medium
05h	Combination of read-only and reversible or erasable medium
06h	Combination of write-once and reversible or erasable medium
07h - 7Fh	RESERVED
80h - FFh	Vendor-specific

The device specific parameter field is contained in the mode parameter header (see 8.3.3). Table 322 defines the device specific parameter values used for optical memory devices.

Table 322 - Optical memory device specific parameter

Bit	7	6	5	4	3	2	1	0
	WP	Reserved		DPOFUA	Reserved			EBC

When used with the MODE SELECT command the WP bit is not defined.

When used with the MODE SENSE command, a write protected (WP) bit of zero indicates that the medium is write enabled. A WP bit of one indicates that the medium is write protected. For read-only media the WP bit is reserved.

When used with the MODE SELECT command the DPOFUA bit is reserved.

When used with the MODE SENSE command, a DPOFUA bit of one indicates that the target supports the DPO and FUA bits (see 9.2.6).

For the MODE SELECT command, an enable blank check (EBC) bit of zero advises the target to disable the blank checking operation of the medium during write operations or during an UPDATE BLOCK command. An EBC bit of one enables blank checking. If a non-blank block is found during a write operation, the command shall be terminated with a CHECK CONDITION status and the sense key shall be set to BLANK CHECK. If a blank block is found during an UPDATE BLOCK command, the command shall be terminated with a CHECK CONDITION status, and the sense key shall be set to BLANK CHECK. For read-only media, the EBC bit is reserved.

For the MODE SENSE command, an enable blank check (EBC) bit of zero indicates that blank checking of the medium during write operations is disabled. An EBC bit of one indicates that blank checking during write and update operations is enabled. For read-only media, the EBC bit is reserved.

The density code field is contained in the mode parameter block descriptor (see 8.3.3). Table 323 defines the density code values used for optical memory devices.

Copyright International Organization for Standardization
Provided by IHS under license with ISO
No reproduction or networking permitted without license from IHS Not for Resale

Table 323 - Optical memory density codes

Density code	Optical media							
00h	**Default density** (currently mounted density)							
	Diameter mm (in)	**Type**	**Sector size**	**Tracks**	**Sides**	**Servo**	**Reference International standard**	**Notes**
01h	86 (3,5)	R/W	512/1 024	12 500	1		10090:1992	
02h	89 (3,5)	R/W	512/1 024	12 500	2			
03h	130 (5,25)	R/W	512/1 024	18 750	2	CS	10089:1991	
04h	130 (5,25)	W-O	512/1 024	30 000	2	SS		1
05h	130 (5,25)	W-O	512/1 024	20 000	2	SS	9191:1991	2
06h	130 (5,25)	W-O	512/1 024	18 750	2	CS	9171-1:1990	
07h	200 (8,0)							
08h	300 (12,0)		1 024		2		13614:1995	
09h	356 (14,0)		1 024	56 350	2		10885:1993	
Codes 80h - FFh are vendor-specific, all other codes are reserved								

Key:	**Type**	**Description**	**Servo**	**Description**
	R/W	Erasable	CS	Continuous servo
	W-O	Write once	SS	Sampled servo
	R/O	Read only		

NOTES
1 RZ modulation.
2 4/15 modulation.

The mode page codes for optical memory devices are shown in table 324.

Table 324 - Mode page codes

Page code	Description	Subclause
08h	Caching page	9.3.3.1
0Ah	Control mode page	8.5.3.1
02h	Disconnect-reconnect page	8.3.3.2
0Bh	Medium types supported page	9.3.3.4
06h	Optical memory page	16.3.3.1
09h	Peripheral device page	8.3.3.3
01h	Read-write error recovery page	9.3.3.6
07h	Verify error recovery page	9.3.3.8
03h - 05h	Reserved	
0Ch - 1Fh	Reserved	
00h	Vendor-specific (does not require page format)	
20h - 3Eh	Vendor-specific (page format required)	
3Fh	Return all pages (valid only for the MODE SENSE command)	

16.3.3.1 Optical memory page

The optical memory page (see table 325) defines parameters for control of optical memory devices.

Copyright International Organization for Standardization
Provided by IHS under license with ISO
No reproduction or networking permitted without license from IHS Not for Resale

Table 325 - Optical memory page

Bit / Byte	7	6	5	4	3	2	1	0
0	PS	Reserved	Page code (06h)					
1	Parameter length (02h)							
2	Reserved							RUBR
3	Reserved							

The parameters savable (PS) bit is only used with the MODE SENSE command. This bit is reserved with the MODE SELECT command. A PS bit of one indicates that the target is capable of saving the page in a non-volatile, vendor-specific location.

A report updated block read (RUBR) bit of zero indicates the target shall not report an error when a command performs a successful read of a block that has been updated. A RUBR bit of one indicates the target shall terminate a command that performs a read of a block that has been updated with CHECK CONDITION status, the sense key set to RECOVERED ERROR, the additional sense code set to UPDATED BLOCK READ, and the data shall be transferred to the initiator. The default state of the RUBR bit for write-once devices (as reported in the INQUIRY command) shall be one.

16.4 Definitions specific to write-once and optical memory devices

16.4.1 blank: The logical block contains no information detectable by the target, or is written with a pattern that appears to the target as no data present. The logical block is considered ready for a write operation.

16.4.2 generation: Indicates a relative revision level of a logical block that has been updated via the UPDATE BLOCK command. A logical block that has never been updated has only one generation associated with it.

16.4.3 read-only medium: This is medium that may not be written by the initiator. The media contains data prepared in a manner not defined by this International Standard.

16.4.4 update: To write new data to a logical block without destroying the previous data. After a block has been updated, a normal read returns the most recent generation of the data. Earlier generations are still available after the update.

16.4.5 write-once medium: This is medium that may be written only once by the initiator. Logical blocks on write-once media that have not been written are considered blank. Logical blocks on write-once media that have been written may not be written again.

Copyright International Organization for Standardization
Provided by IHS under license with ISO
No reproduction or networking permitted without license from IHS Not for Resale

17 Medium-changer devices

17.1 Medium-changer device model

Medium changer devices mechanize the movement of media to and from primary devices (such as disk or tape drives) and other locations within the range of the medium changer. The medium changer command set is based on a physical model of this functionality.

This command set supports varied physical implementations of the medium changer function. Most of these variations are hidden from the initiator by the high level of function provided by the MOVE MEDIUM and EXCHANGE MEDIUM commands and by the generalized nature of the element addressing scheme. However, initiators may need to be aware of the capabilities of the particular medium changer device. These characteristics and capabilities are conveyed via MODE SENSE pages.

17.1.1 Medium-changer elements

The medium-changer command set uses as its address space the set of physical locations and mechanisms within the scope of a medium changer device. The term element is used throughout this clause to refer to one member of the medium changer address space. Each element is a discrete physical entity that may hold zero or one physical unit of media - one disk cartridge, one spool of tape, etc. Element addresses do not extend across multiple physical units of media. Likewise, element addresses are independent of any logical partitioning that the primary device may support within a physical unit of media.

A medium changer is viewed as a set of addressable elements, each of which may contain a unit of media or be used to move a unit of media. Each medium changer element has a unique 16 bit element address. Each element is an instance of one of four classes or element types.

a) MEDIUM TRANSPORT ELEMENT
b) STORAGE ELEMENT
c) IMPORT EXPORT ELEMENT
d) DATA TRANSFER ELEMENT

Units of media (cartridges, cassettes, caddies, etc.) are referred to only indirectly by this device model. Units of media can be moved to or from any of the elements of the medium changer device. The presence of media at the various elements in a medium changer can be sensed. In order to ensure exclusive access to a unit of media, the element where the unit of media is located (the element address) must be reserved.

Elements of the medium transport, import export and (rarely) data transfer type may not provide independent storage for medium. The capabilities of a particular medium changer in this respect can be sensed via the device capabilities page of the mode sense data. The following hypothetical medium changer implementation illustrates one case of an element not providing independent storage for medium. Consider a medium changer which has a carousel style storage for medium. The import export function could be provided by a port which allows operator access to one of the storage elements. In such a device, the MOVE ELEMENT command from storage element to import export element would rotate the carousel to align the addressed storage element to the import export position. In this case the import export element does not provide independent storage but rather access to one of the storage elements.

17.1.1.1 Medium transport elements

Medium transport elements address the functions of the medium changer device that perform the movement of units of media. Where a medium transport element can serve (even temporarily) as a storage location for medium, the location of each unit of media must have a separate element address.

Copyright International Organization for Standardization
Provided by IHS under license with ISO
No reproduction or networking permitted without license from IHS Not for Resale

In larger medium changer devices, the medium movement functions may be performed by multiple independent robotics subsystems. Each of these may have a number of medium transport element addresses. The element addresses within each subsystem shall be contiguous. Any of the element addresses within a subsystem may be used interchangeably in the medium transport element address field of MOVE MEDIUM and EXCHANGE MEDIUM commands. An initiator may determine the capabilities of the medium movement facilities of a medium changer device via the transport geometry MODE SENSE page, see 17.3.3.3.

Element address zero is reserved for use in the medium transport element address field of MOVE MEDIUM and EXCHANGE MEDIUM commands to direct the medium changer to use a default or medium changer selected medium transport element.

In some implementations, medium transport elements may be source and/or destination addresses in MOVE MEDIUM and EXCHANGE MEDIUM commands. They may or may not provide independent storage of a unit of media. See the device capabilities MODE SENSE page, see 17.3.3.1.

17.1.1.2 Storage elements

Storage elements are locations of units of media while not in some other element type. Medium in storage elements is available for access by medium transport elements.

Storage elements may be source and/or destination addresses in MOVE MEDIUM and EXCHANGE MEDIUM commands.

17.1.1.3 Import export elements

Import export elements are locations of units of media which are being inserted into or withdrawn from the medium changer device. Medium in these elements is accessible by both medium transport elements, by the operator, or by another independent medium changer device.

Import export elements may be source and/or destination addresses in MOVE MEDIUM and EXCHANGE MEDIUM commands. They may or may not provide independent storage of a unit of media, see the device capabilities MODE SENSE page, see 17.3.3.

Particular import export elements may be capable of either import actions, export actions, both or neither (if an element is not present).

17.1.1.4 Data transfer element

Data transfer elements are locations of the primary devices which are capable of reading or writing the medium. Data transfer elements may also be viewed as medium changer element addresses of units of media loaded in or available for loading in or removal from primary devices such as disk or tape drives. Note that the medium changer function specified in this clause does not control the primary device. That is the responsibility of the system.

Data transfer elements may be source and/or destination addresses in MOVE MEDIUM and EXCHANGE MEDIUM commands. They may or may not provide independent storage of a unit of media, see the device capabilities MODE SENSE page, see 17.3.3.

17.1.2 SCSI addressing of medium changer devices

Medium changer devices respond to a SCSI ID / LUN address different from those used by the data transfer element devices. If the data transfer elements served by the medium changer device are SCSI devices, they may be addressed through the same SCSI ID as the changer device but with a different logical unit number or through a different SCSI ID. There is no requirement that communication with the data transfer elements be done with the same SCSI bus as the medium changer device or by an SCSI interface at all. This command set does not

Copyright International Organization for Standardization
Provided by IHS under license with ISO
No reproduction or networking permitted without license from IHS Not for Resale

support addressing both the changer and the data transfer elements with the same SCSI ID / LUN because the device at a particular SCSI ID / LUN address must have a single peripheral device type.

The READ ELEMENT STATUS response page for data transfer elements provides the SCSI ID / LUN address of the primary devices serviced by a medium changer device if known to the medium changer device.

17.1.3 Data access operations using a medium changer device

The medium changer device moves units of media among the several elements accessible to it. It is able to report the full/empty status of any of these elements. Data transfer elements represent the interface between the medium changer device and some primary device such as a removable media optical disk drive or tape drive.

In order to access data on a unit of media currently located in a medium changer storage element, a system will have to issue commands to both the medium changer device and to the primary device. The commands to the medium changer may include MOVE MEDIUM or EXCHANGE MEDIUM plus READ ELEMENT STATUS commands. The commands to the primary device may include TEST UNIT READY, INQUIRY, START STOP and LOAD UNLOAD commands in addition to READ and WRITE commands.

17.1.4 Element status maintenance requirements

If the medium changer device chooses to implement the READ ELEMENT STATUS command, the medium changer device must be capable of reporting the various data (i.e. full, error, etc.) required by each page type. The medium changer may maintain this information at all times or regenerate it in response to the READ ELEMENT STATUS command. The INITIALIZE ELEMENT STATUS command can be used to force regeneration of this information.

17.1.5 Volume tags

The read element status descriptor format for all element types includes two sets of fields that contain volume tag information. These optional fields are used to report media identification information that the medium changer has acquired either by reading an external label (e.g. bar code labels), by a SEND VOLUME TAG command or by other means which may be vendor-specific. The same volume tag information shall be available to all initiators whether assigned by that initiator, by some other initiator or by the media changer itself.

Volume tag information provides a means to confirm the identity of a unit of media that resides in a medium changer element. This command set does not define any direct addressing of units of media based on these fields. However, commands are defined that provide translation between volume tag information and the element address where that unit of media currently resides.

The medium changer command set definition does not impose the requirement that volume tag information be unique over the units of media within the scope of the changer device.

The following commands support the optional volume tag functionality:

a) SEND VOLUME TAG - either as a translation request or to associate a volume tag with the unit of media currently residing at an element address.
b) REQUEST VOLUME ELEMENT ADDRESS - return the element address currently associated with the volume tag information transferred with the last send volume tag command.
c) READ ELEMENT STATUS - optionally reports volume tag information for all element types.
d) MOVE MEDIUM and EXCHANGE MEDIUM commands - if volume tags are implemented, these commands must retain the association between volume tag information and units of media as they are moved from element to element.

Copyright International Organization for Standardization
Provided by IHS under license with ISO
No reproduction or networking permitted without license from IHS Not for Resale

17.1.5.1 Volume tag format

Volume tag information consists of a volume identifier field of 32 bytes plus a volume sequence number field of 2 bytes. The volume identifier shall consist of a left justified sequence of ISO/IEC 646 characters. Unused positions shall be blank (20h) filled. In order for the SEND VOLUME TAG translate with template to work the characters '*' and'?' (2Ah and 3Fh) must not appear in volume identification data and there must be no blanks (20h) within the significant part of the volume identifier. If volume tag information for a particular element is undefined, the volume identifier field shall be zero.

The volume sequence number is a 2 byte integer field. If the volume sequence number is not used this field shall be zero. The volume tag contents are independent of the volume identification information recorded on the media.

NOTE 199 For compatibility with the volume identifier defined by volume and file structure standards, it is recommended that the characters in the significant non-blank portion of the volume identifier field be restricted to the set: '0'..'9', 'A'..'Z', and '_' (30h .. 39h, 41h .. 5Ah, 5Fh). Specific systems may have differing requirements that may take precedence over this recommendation.

Table 326 defines the fields within the 36 byte primary and alternate volume tag information fields found in READ ELEMENT STATUS descriptors and in the data format for the SEND VOLUME TAG command.

Table 326 - Volume tag information format

Bit / Byte	7	6	5	4	3	2	1	0
0	Volume identification field							
31								
32	Reserved							
33								
34	(MSB) Volume sequence number							
35								(LSB)

17.1.5.2 Primary and alternate volume tag information

Element status descriptors as reported by the READ ELEMENT STATUS command define a primary volume tag and an alternate volume tag. Alternate volume tag information provides a means for a system to use different volume identification information for each side of double sided media. In such a system, the primary volume tag information refers to the logical medium accessible via a MOVE MEDIUM command without the invert bit set. The alternate volume tag information refers to the other side of the media, i.e. the side that would be accessed via a MOVE MEDIUM command with the invert bit set.

Copyright International Organization for Standardization
Provided by IHS under license with ISO
No reproduction or networking permitted without license from IHS Not for Resale

17.2 Commands for medium changer devices

The commands for medium changer devices shall be as shown in table 327.

Table 327 - Commands for medium changer devices

Command name	Operation code	Type	Subclause
CHANGE DEFINITION	40h	O	8.2.1
EXCHANGE MEDIUM	A6h	O	17.2.1
INITIALIZE ELEMENT STATUS	07h	O	17.2.2
INQUIRY	12h	M	8.2.5
LOG SELECT	4Ch	O	8.2.6
LOG SENSE	4Dh	O	8.2.7
MODE SELECT(06)	15h	O	8.2.8
MODE SELECT(10)	55h	O	8.2.9
MODE SENSE(06)	1Ah	O	8.2.10
MODE SENSE(10)	5Ah	O	8.2.11
MOVE MEDIUM	A5h	M	17.2.3
POSITION TO ELEMENT	2Bh	O	17.2.4
PREVENT ALLOW MEDIUM REMOVAL	1Eh	O	9.2.4
READ BUFFER	3Ch	O	8.2.12
READ ELEMENT STATUS	B8h	O	17.2.5
RECEIVE DIAGNOSTIC RESULTS	1Ch	O	8.2.13
RELEASE	17h	O	17.2.6
REQUEST VOLUME ELEMENT ADDRESS	B5h	O	17.2.7
REQUEST SENSE	03h	M	8.2.14
RESERVE	16h	O	17.2.8
REZERO UNIT	01h	O	9.2.13
SEND DIAGNOSTIC	1Dh	M	8.2.15
SEND VOLUME TAG	B6h	O	17.2.9
TEST UNIT READY	00h	M	8.2.16
WRITE BUFFER	3Bh	O	8.2.17

Key: M = command implementation is mandatory.
O = command implementation is optional.

Operation codes 0Ch, and C0h through FFh are vendor-specific. All other operation codes are reserved.

Copyright International Organization for Standardization
Provided by IHS under license with ISO
No reproduction or networking permitted without license from IHS Not for Resale

17.2.1 EXCHANGE MEDIUM command

The EXCHANGE MEDIUM command (see table 328) provides a means to exchange the medium in the source element, with the medium located at a destination element.

Table 328 - EXCHANGE MEDIUM command

Bit / Byte	7	6	5	4	3	2	1	0
0	Operation code (A6h)							
1	Logical unit number			Reserved				
2	(MSB)			Transport element address				
3								(LSB)
4	(MSB)			Source address				
5								(LSB)
6	(MSB)			First destination address				
7								(LSB)
8	(MSB)			Second destination address				
9								(LSB)
10	Reserved						Inv2	Inv1
11	Control							

NOTE 200 Support of this command requires that the device have the capability of handling two units of media at the same time or that it emulate this capability.

The medium in the source element is moved to the first destination element and the medium that previously occupied the first destination element is moved to the second destination element. The second destination element may or may not be the same element as the source element. In the case of a simple exchange, the source element and the second destination element are the same.

If this command is received and the source element is empty or the first destination element is empty, or the second destination element (if different from the source element) is full, or the second destination element (if the same as the source element) is empty, the target shall return CHECK CONDITION status and set the sense key to ILLEGAL REQUEST.

The transport element address specifies the medium transport element that is to be used in executing this command. The default transport element address of zero may be used if this functionality is supported by the medium changer device. If the transport element address specified has not been assigned or has been assigned to an element other than a medium transport element, the target shall return CHECK CONDITION status and the set the sense key to ILLEGAL REQUEST.

The source address, the first destination address, and the second destination address may represent a storage element, an import export element, a data transfer element, or a medium transport element. If the address specified has not been assigned to a specific element of the medium changer, the target shall return CHECK CONDITION status and set the sense key to ILLEGAL REQUEST.

The device capabilities page (see 17.3.3.) provides a matrix which defines the supported source element type and first destination element type combinations for EXCHANGE MEDIUM commands when the source element type is the same as second destination element type.

Copyright International Organization for Standardization
Provided by IHS under license with ISO
No reproduction or networking permitted without license from IHS Not for Resale

An Inv1 bit of one specifies that the medium shall be inverted prior to depositing the medium into the first destination element.

An Inv2 bit of one specifies that the medium shall be inverted prior to depositing the medium into the second destination element.

If the medium changer does not support medium rotation for handling double sided media, the Inv1 and Inv2 bits should be set to zero. If either of these bits is non-zero, a target which is not capable of medium rotation shall return CHECK CONDITION status and set the sense key to ILLEGAL REQUEST.

17.2.2 INITIALIZE ELEMENT STATUS command

The INITIALIZE ELEMENT STATUS command (see table 329) will cause the medium changer to check all elements for medium and any other status relevant to that element. The intent of this command is to enable the initiator to get a quick response from a following READ ELEMENT STATUS command. It may be useful to issue this command after a power failure, or if medium has been changed by an operator, or if configurations have been changed.

Table 329 - INITIALIZE ELEMENT STATUS command

Bit / Byte	7	6	5	4	3	2	1	0
0	Operation code (07h)							
1	Logical unit number			Reserved				
2	Reserved							
3	Reserved							
4	Reserved							
5	Control							

Copyright International Organization for Standardization
Provided by IHS under license with ISO
No reproduction or networking permitted without license from IHS Not for Resale

17.2.3 MOVE MEDIUM command

The MOVE MEDIUM command (see table 330) requests that the target move a unit of media from a source element to a destination element.

Table 330 - MOVE MEDIUM command

Bit / Byte	7	6	5	4	3	2	1	0
0	Operation code (A5h)							
1	Logical unit number			Reserved				
2	(MSB)			Transport element address				
3								(LSB)
4	(MSB)			Source address				
5								(LSB)
6	(MSB)			Destination address				
7								(LSB)
8	Reserved							
9	Reserved							
10	Reserved							Invert
11	Control							

The source address specifies the location that the medium is taken from, and the destination address specifies the location that the medium is moved to.

If this command is received and the source element is empty or the destination element (if different from the source element) is full, the target shall return CHECK CONDITION status and set the sense key to ILLEGAL REQUEST.

The transport element address specifies the medium transport element that is to be used in executing this command. The default medium transport element address of zero may be used if this functionality is supported by the medium changer device. If the address specified has not been assigned or has been assigned to an element other than a medium transport element, the target shall return CHECK CONDITION status and the set the sense key to ILLEGAL REQUEST.

The source address and the destination address may represent a storage element, an import export element, a data transfer element, or a medium transport element. If the address specified has not been assigned to a specific element of the medium changer, the target shall return CHECK CONDITION status and set the sense key to ILLEGAL REQUEST.

The device capabilities MODE SENSE page provides a matrix with the supported source element or destination element combinations for the MOVE MEDIUM command. See 17.3.3.1

An invert bit of one specifies that the medium shall be inverted or rotated prior to depositing the medium into the destination element. If the medium changer does not support medium rotation for handling double sided media, the invert bit should be set to zero. If this bit is non-zero, a target that is not capable of medium rotation shall return CHECK CONDITION status and set the sense key to ILLEGAL REQUEST.

Copyright International Organization for Standardization
Provided by IHS under license with ISO
No reproduction or networking permitted without license from IHS Not for Resale

17.2.4 POSITION TO ELEMENT command

The POSITION TO ELEMENT command (see table 331) will position the transport element specified in front of the destination element specified.

Table 331 - POSITION TO ELEMENT command

Bit / Byte	7	6	5	4	3	2	1	0
0	Operation code (2Bh)							
1	Logical unit number			Reserved				
2	(MSB)			Transport element address				
3								(LSB)
4	(MSB)			Destination element address				
5								(LSB)
6	Reserved							
7	Reserved							
8	Reserved							Invert
9	Control							

NOTE 201 In this context, in front of is defined to mean positioned so that no further motion of the medium transport element is necessary to execute an appropriate MOVE MEDIUM command between the two elements.

An invert bit value of one requests that the transport element be inverted or rotated before positioning in front of the destination element. A value of zero requests that the orientation be unchanged before positioning in front of the destination element.

Copyright International Organization for Standardization
Provided by IHS under license with ISO
No reproduction or networking permitted without license from IHS
Not for Resale

17.2.5 READ ELEMENT STATUS command

The READ ELEMENT STATUS command (see table 332) requests that the target report the status of its internal elements to the initiator.

Table 332 - READ ELEMENT STATUS command

Bit / Byte	7	6	5	4	3	2	1	0
0	Operation code (B8h)							
1	Logical unit number			VolTag	Element type code			
2	(MSB)			Starting element address				
3								(LSB)
4	(MSB)			Number of elements				
5								(LSB)
6	Reserved							
7	(MSB)							
8				Allocation length				
9								(LSB)
10	Reserved							
11	Control							

A volume tag (VolTag) bit of one indicates that the target shall report volume tag information if this feature is supported. A value of zero indicates that volume tag information shall not be reported. If the volume tag feature is not supported this field shall be treated as reserved.

The element type code field specifies the particular element type(s) selected for reporting by this command. A value of zero specifies that status for all element types shall be reported. The element type codes are defined in table 333.

Table 333 - Element type code

Code	Description
0h	All element types reported, (valid in CDB only)
1h	Medium transport element
2h	Storage element
3h	Import export element
4h	Data transfer element
5h - Fh	Reserved

The starting element address specifies the minimum element address to report. Only elements with an element type code permitted by the element type code specification, and an element address greater than or equal to the starting element address shall be reported. Element descriptor blocks are not generated for undefined element addresses.

The number of elements specifies the maximum number of element descriptors to be created by the target for this command. The value specified by this field is not the range of element addresses to be considered for reporting but rather the number of defined elements to report. If the allocation length is not sufficient to transfer all

Copyright International Organization for Standardization
Provided by IHS under license with ISO
No reproduction or networking permitted without license from IHS Not for Resale

the element descriptors, the target shall transfer all those descriptors that can be completely transferred and this shall not be considered an error.

17.2.5.1 Element status data

The data returned by the READ ELEMENT STATUS command is defined in table 334 and 17.2.5.3 through 17.2.5.6. Element status data consists of an eight-byte header, (see table 334) followed by one or more element status pages.

Table 334 - Element status data

Bit / Byte	7	6	5	4	3	2	1	0
0	(MSB)							
1	First element address reported							(LSB)
2	(MSB)							
3	Number of elements available							(LSB)
4	Reserved							
5	(MSB)							
6	Byte count of report available (all pages, n - 7)							
7								(LSB)
8	Element status page(s)							
n								

The first element address reported field indicates the element address of the element with the smallest element address found to meet the CDB request.

The number of elements available field indicates the number of elements meeting the request in the command descriptor block. The status for these elements is returned if sufficient allocation length was specified.

The byte count of report available field indicates the number of bytes of element status page data available for all elements meeting the request in the command descriptor block. This value shall not be adjusted to match the allocation length available.

NOTE 202 - The READ ELEMENT STATUS command can be issued with an allocation length of eight bytes in order to determine the allocation length required to transfer all the element status data specified by the command.

Figure 28 provides an illustration of the element status data structure.

Copyright International Organization for Standardization
Provided by IHS under license with ISO
No reproduction or networking permitted without license from IHS Not for Resale

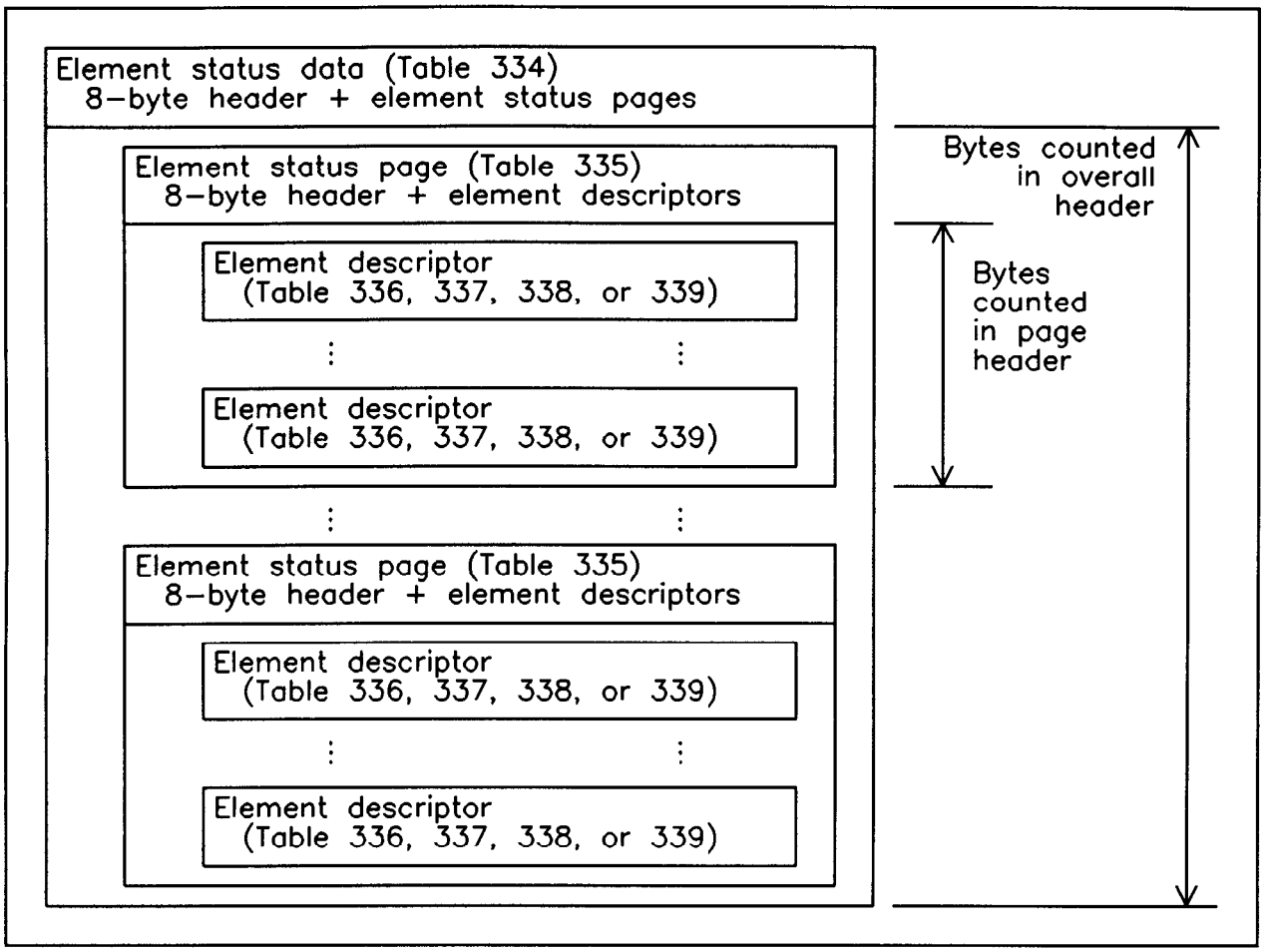

Figure 28 - Illustration of element status data structure

Copyright International Organization for Standardization
Provided by IHS under license with ISO
No reproduction or networking permitted without license from IHS
Not for Resale

17.2.5.2 Element status page

The element status page is defined in table 335. Each element status page includes an eight-byte header followed by one or more element descriptor blocks. The header includes the element type code, the length of each descriptor block and the number of bytes of element descriptor information that follow the header for this element type.

Table 335 - Element status page

Bit / Byte	7	6	5	4	3	2	1	0
0	Element type code							
1	PVolTag	AVolTag	Reserved					
2	(MSB) Element descriptor length							
3								(LSB)
4	Reserved							
5	(MSB) Byte count of descriptor data available (this page, n - 7)							
6								
7								(LSB)
8	Element descriptor(s)							
n								

The element type code field indicates the element type reported by this page.

A primary volume tag (PVolTag) bit of one indicates that the primary volume tag information field is present in each of the following element descriptor blocks. A value of zero indicates that these bytes are omitted from the element descriptors that follow.

An alternate volume tag (AVolTag) bit of one indicates that the alternate volume tag information field is present in each of the following element descriptor blocks. A value of zero indicates that these bytes are omitted from the element descriptors that follow.

The element descriptor length field indicates the number of bytes in each element descriptor.

The byte count of descriptor data available field indicates the number of bytes of element descriptor data available for elements of this element type meeting the request in the CDB. This value shall not be adjusted to match the allocation length available.

Each element descriptor includes the element address and status flags; it may also contain sense code information as well as other information depending on the element type (see 17.2.5.3 through 17.2.5.6).

--`,,```,,,,````-`-`,,`,,`,`,,`---

Copyright International Organization for Standardization
Provided by IHS under license with ISO
No reproduction or networking permitted without license from IHS Not for Resale

17.2.5.3 Medium transport element descriptor

Table 336 defines the medium transport element descriptor.

Table 336 - Medium transport element descriptor

Bit / Byte	7	6	5	4	3	2	1	0
0	(MSB)							
1	Element address							(LSB)
2	Reserved					Except	Reserved	Full
3	Reserved							
4	Additional sense code							
5	Additional sense code qualifier							
6 – 8	Reserved							
9	SValid	Invert	Reserved					
10	(MSB)							
11	Source storage element address							(LSB)
12 – 47	Primary volume tag information (Field omitted if PVolTag = 0)							
48 – 83	Alternate volume tag information (Field omitted if AVolTag = 0)							
84 – 87	Reserved (Field moved up if volume tag information field(s) are omitted.)							
88 – z-1	Vendor-specific (Field moved up if volume tag information field(s) are omitted.)							

The element address field gives the address of the medium changer element whose status is reported by this element descriptor block.

An exception (Except) bit of one indicates the element is in an abnormal state. An exception bit of zero indicates the element is in a normal state. If this bit is one, information on the abnormal state may be available in the additional sense code and additional sense code qualifier bytes.

A full bit value of one indicates that the element contains a unit of media. A value of zero indicates that the element does not contain a unit of media.

The additional sense code field may provide specific information on an abnormal element state. The values in this field are as defined for the additional sense code of the REQUEST SENSE data (see 8.2.14.3).

The additional sense code qualifier field may provide more detailed information on an abnormal element state. The values in this field are as defined for the additional sense code qualifier of the REQUEST SENSE data (see 8.2.14.3).

Copyright International Organization for Standardization
Provided by IHS under license with ISO
No reproduction or networking permitted without license from IHS Not for Resale

A source valid (SValid) bit value of one indicates that the source storage element address field and the invert bit information are valid. A value of zero indicates that the values in these fields are not valid.

An invert bit value of one indicates that the unit of media now in this element was inverted by MOVE MEDIUM or EXCHANGE MEDIUM operations since it was last in the source storage element. A value of zero indicates that no inversion occurred during the operation.

The source storage element address field provides the address of the last storage element this unit of media was moved. This field is valid only if the SValid bit is one.

The primary and alternate volume tag information fields provide for identifying the unit of media residing in this element (see 17.1.5.). Either or both of these fields may be omitted for all the element descriptor blocks that comprise an element status page as indicated by the PVolTag and AVolTag bits in the element status page header.

17.2.5.4 Storage element descriptor

Table 337 defines the storage element descriptor.

Table 337 - Storage element descriptor

Bit / Byte	7	6	5	4	3	2	1	0
0	(MSB)							
1	Element address							(LSB)
2	Reserved				Access	Except	Reserved	Full
3	Reserved							
4	Additional sense code							
5	Additional sense code qualifier							
6 – 8	Reserved							
9	SValid	Invert	Reserved					
10	(MSB)							
11	Source element address							(LSB)
12 – 47	Primary volume tag information (Field omitted if PVolTag = 0)							
48 – 83	Alternate volume tag information (Field omitted if PVolTag = 0)							
84 – 87	Reserved (Field moved up if volume tag information field(s) are omitted.)							
88 – z-1	Vendor-specifc (Field moved up if volume tag information field(s) are omitted.)							

An access bit value of one indicates that access to the element by a medium transport element is allowed. An access bit of zero indicates that access to the element by the medium transport element is denied.

Copyright International Organization for Standardization
Provided by IHS under license with ISO
No reproduction or networking permitted without license from IHS Not for Resale

The source storage element address field provides the address of the last storage element this unit of media was moved from. This element address value may or may not be the same as this element. This field is valid only if the SValid bit is one.

For fields not defined in this subclause, see 17.2.5.3.

17.2.5.5 Import export element descriptor

Table 338 defines the import export element descriptor.

Table 338 - Import export element descriptor

Bit / Byte	7	6	5	4	3	2	1	0
0	(MSB)							
1	Element address							(LSB)
2	Reserved			InEnab	ExEnab	Access	Except	ImpExp	Full
3	Reserved							
4	Additional sense code							
5	Additional sense code qualifier							
6 – 8	Reserved							
9	SValid	Invert	Reserved					
10	(MSB)							
11	Source storage element address							(LSB)
12 – 47	Primary volume tag information (Field omitted if PVolTag = 0)							
48 – 83	Alternate volume tag information (Field omitted if PVolTag = 0)							
84 – 87	Reserved (Field moved up if volume tag information field(s) are omitted.)							
88 – z-1	Vendor-specific (Field moved up if volume tag information field(s) are omitted.)							

An import enable (InEnab) bit of one indicates that the import export element supports movement of media into the scope of the medium changer device. An InEnab bit of zero indicates that this element does not support import actions.

An export enable (ExEnab) bit of one indicates that the import export element supports movement of media out of the scope of the medium changer device. An ExEnab bit of zero indicates that this element does not support export actions.

An access bit of one indicates that access to the import export element by a medium transport element is allowed. An access bit of zero indicates access to the import export element by medium transport elements is denied.

Copyright International Organization for Standardization
Provided by IHS under license with ISO
No reproduction or networking permitted without license from IHS Not for Resale

NOTE 203 An example of when access would be denied is when the operator has exclusive access to the import export element.

An import export (ImpExp) bit of one indicates the unit of media in the import export element was placed there by an operator. An ImpExp bit of zero indicates the unit of media in the import export element was placed there by the medium transport element.

For fields not defined in this clause, see 17.2.5.3.

17.2.5.6 Data transfer element descriptor

Table 339 defines the data transfer element descriptor.

Table 339 - Data transfer element descriptor

Bit / Byte	7	6	5	4	3	2	1	0
0	(MSB)							
1	Element address							(LSB)
2	Reserved				Access	Except	Reserved	Full
3	Reserved							
4	Additional sense code							
5	Additional sense code qualifier							
6	Not bus	Reserved	ID valid	LU valid	Reserved	Logical unit number		
7	SCSI bus address							
8	Reserved							
9	SValid	Invert	Reserved					
10	(MSB)							
11	Source storage element address							(LSB)
12 — 47	Primary volume tag information (Field omitted if PVolTag = 0)							
48 — 83	Alternate volume tag information (Field omitted if PVolTag = 0)							
84 — 87	Reserved (Field moved up if volume tag information field(s) are omitted.)							
88 — z-1	Vendor-specific (Field moved up if volume tag information field(s) are omitted.)							

An access bit value of one indicates access to the data transfer element by the medium transport element is allowed. A value of zero indicates access to the data transfer element by a medium transport element is denied.

NOTE 204 Access to the data transfer element by medium transport elements might be denied if a data transfer operation was under way. Note that a one value in this bit may not be sufficient to ensure a successful operation. This bit can only reflect the best information available to the medium changer device, which may not accurately reflect the state of the primary (data transfer) device.

Copyright International Organization for Standardization
Provided by IHS under license with ISO
No reproduction or networking permitted without license from IHS Not for Resale

A not this bus (not bus) bit value of one indicates that the SCSI bus address and logical unit number values are not valid for the SCSI bus used to select the medium changer device. A not bus bit value of zero indicates that the SCSI address and logical unit values, if valid, are on the same bus as the medium changer device.

An ID Valid bit value of one indicates that the SCSI bus address field contains valid information. An LU Valid bit value of one indicates that the logical unit number field contains valid information.

The SCSI bus address field, if valid, provides the SCSI address (binary representation) of the primary device served by the medium changer at this element address.

The logical unit number field, if valid, provides the logical unit number within the SCSI bus device of the primary device served by the medium changer at this element address.

For fields not defined in this clause, see 17.2.5.3.

17.2.6 REQUEST VOLUME ELEMENT ADDRESS command

The REQUEST VOLUME ELEMENT ADDRESS command (see table 340) is used to transfer the results of a SEND VOLUME TAG command. Multiple REQUEST VOLUME ELEMENT ADDRESS commands may be used to recover the results of a single SEND VOLUME TAG command with the translate option.

Table 340 - REQUEST VOLUME ELEMENT ADDRESS command

Bit / Byte	7	6	5	4	3	2	1	0
0	Operation code (B5h)							
1	Logical unit number			VolTag	Element type code			
2	(MSB)							
3	Element address							(LSB)
4	(MSB)							
5	Number of elements							(LSB)
6	Reserved							
7	(MSB)							
8	Allocation length							
9								(LSB)
10	Reserved							
11	Control							

For each SEND VOLUME TAG command, the target shall be able to report multiple elements that match a volume tag template in element address order. Once information for a given element address has been reported, only higher element addresses will be reported by subsequent REQUEST VOLUME ELEMENT ADDRESS commands.

NOTE 205 In order to ensure the successful completion of a SEND VOLUME TAG, REQUEST VOLUME ELEMENT ADDRESS sequence in a multi-initiator environment, it may be necessary to reserve the medium changer device. To do this, issue a unit RESERVE command prior to the SEND VOLUME TAG command and delay issuing the RELEASE until after the last REQUEST VOLUME ELEMENT ADDRESS.

Copyright International Organization for Standardization
Provided by IHS under license with ISO
No reproduction or networking permitted without license from IHS Not for Resale

A volume tag (VolTag) bit of one indicates that the target shall report volume tag information. A value of zero indicates that volume tag information shall not be reported. This is provided for compatibility with the READ ELEMENT STATUS command.

The element type code field specifies the particular element type(s) selected for reporting by this command. A value of zero specifies that status for all element types shall be reported. The codes for this field are defined in 17.2.5. This acts as a qualification of the element(s) determined by SEND VOLUME TAG to match the template specified.

The element address field gives a medium changer element address whose interpretation depends on the send action code received with the last SEND VOLUME TAG command. This code is echoed in the volume element address return format transferred by this command. When the last send action code was a translate, (code values 0h .. 7h), the element address field gives the minimum element address to be reported by this command. When the send action code is other than translate, (i.e. assert, replace, and undefined, code values 8h .. Dh), the element address field gives the particular element whose volume tag information was modified.

The number of elements specifies the maximum number of elements and volume tags to be reported by the target for this command. The value specified by this field is not the range of element addresses to be considered for reporting but rather the number of elements to report of those that match the last send volume tag translate template. If the allocation length is not sufficient to transfer all the element descriptors, the target shall transfer all those descriptors that can be completely transferred and this shall not be considered an error.

The data returned by this command consists of a header as defined by table 341, plus one or more element type specific pages in the same format as defined by the READ ELEMENT STATUS command.

Table 341 - Volume element address header format

Bit / Byte	7	6	5	4	3	2	1	0
0	(MSB)			First element address reported				
1								(LSB)
2	(MSB)			Number of elements reported				
3								(LSB)
4	Reserved				Send action code			
5	(MSB)							
6				Byte count of report available (all pages, x - 7)				
7								(LSB)
8 to x	Element status page(s)							

The send action code field gives the function performed by the last SEND VOLUME TAG command as defined in 17.2.9. This command reports the results of this send action code operation.

For fields not defined in this subclause, see 17.2.5.1.

Copyright International Organization for Standardization
Provided by IHS under license with ISO
No reproduction or networking permitted without license from IHS Not for Resale

17.2.7 RELEASE command

The RELEASE command (see table 342) is used to release previously reserved units, or, if the element release option is implemented, previously reserved elements within units. It is not an error for an initiator to attempt to release a reservation that is not currently active. In this case, the target shall return GOOD status without altering any other reservation.

Table 342 - RELEASE command

Bit / Byte	7	6	5	4	3	2	1	0
0	Operation code (17h)							
1	Logical unit number			3rdPty	Third party device ID			Element
2	Reservation identification							
3	Reserved							
4	Reserved							
5	Control							

17.2.7.1 Logical unit release

If the element bit is zero, this command shall cause the target to terminate all non-third party unit and element reservations that are active from the initiator to the specified logical unit.

17.2.7.2 Element release (optional)

If the element bit is one and the element release option is not implemented, the RELEASE command shall be terminated with CHECK CONDITION status and the sense key shall be set to ILLEGAL REQUEST. This option shall be implemented if the element reservation option (see 17.2.8.1) is implemented.

If the element bit is one and the element release option is implemented, this command shall cause any reservation from the requesting initiator with a matching reservation identification to be terminated. Other reservations from the requesting initiator shall remain in effect.

17.2.7.3 Third party release

The third-party release option of the RELEASE command allows an initiator to release a unit or elements within a unit that were previously reserved using third-party reservation (see 17.2.8.3). Third-party release shall be implemented if third-party reserve is implemented.

If the third-party (3rdPty) bit is zero, the third-party release option is not requested. If the 3rdPty bit is one and the target implements the third-party release option, the target shall release the specified unit or elements, but only if the reservation was made using the third-party reservation option by the initiator that is requesting the release for the same SCSI device as specified in the third-party device ID field.

If the 3rdPty bit is one and the target does not implement the third-party release option, the target shall terminate the command with CHECK CONDITION status and the sense key shall be set to ILLEGAL REQUEST.

Copyright International Organization for Standardization
Provided by IHS under license with ISO
No reproduction or networking permitted without license from IHS Not for Resale

17.2.8 RESERVE command

The RESERVE command (see table 343) is used to reserve units or, if the element reservation option is implemented, elements within units for the use of the initiator. The third-party reservation allows units or elements to be reserved for another specified SCSI device. The RESERVE and RELEASE commands provide the basic mechanism for contention resolution in multiple-initiator systems.

Table 343 - RESERVE command

Bit / Byte	7	6	5	4	3	2	1	0
0	Operation code (16h)							
1	Logical unit number			3rdPty	Third party device ID			Element
2	Reservation identification							
3	(MSB)			Element list length				
4								(LSB)
5	Control							

17.2.8.1 Logical unit reservation

If the element bit is zero, this command shall request that the entire unit be reserved for the exclusive use of the initiator until the reservation is superseded by another valid RESERVE command from the initiator that made the reservation or until released by a RELEASE command from the same initiator that made the reservation, by a BUS DEVICE RESET message from any initiator, by a hard RESET condition, or by a power off/on cycle. A unit reservation shall not be granted if the unit or any element is reserved by another initiator. It shall be permissible for an initiator to reserve a unit that is currently reserved by that initiator. If the element bit is zero, the reservation identification and the element list length shall be ignored.

If the unit, or any element within the unit, is reserved for another initiator, the target shall respond by returning RESERVATION CONFLICT status.

If, after honouring the reservation, any other initiator attempts to perform any command on the reserved unit other than an INQUIRY, REQUEST SENSE, ALLOW MEDIUM REMOVAL, RESERVE, or a RELEASE command, the command shall be rejected with RESERVATION CONFLICT status.

17.2.8.2 Element reservation (optional)

The reservation identification provides a means for an initiator to identify each element reservation. This allows an initiator in a multiple-tasking environment, to have multiple reservations outstanding. The reservation identification is used in the RELEASE command to specify which reservation is to be released. It is also used in superseding RESERVE commands to specify which reservation is to be superseded.

If the element reservation option is implemented, the element release option (see 17.2.7.2) shall also be implemented. These options permit multiple elements within the unit to be reserved, each with a separate reservation identification.

If the element bit is one, and the element reservation option is implemented, the target shall process the reservation request as follows:

a) The element list shall be checked for valid element addresses. If any element address is invalid for this unit, the command shall be terminated with CHECK CONDITION status and the sense key shall be set to ILLEGAL REQUEST. The element list shall be checked for invalid element overlaps with other element

Copyright International Organization for Standardization
Provided by IHS under license with ISO
No reproduction or networking permitted without license from IHS Not for Resale

descriptors in the element list and if invalid overlaps are found, the command shall be terminated with CHECK CONDITION status and the sense key shall be set to ILLEGAL REQUEST.

b) If the requested reservation does not conflict with any active or previously requested reservation, the elements specified shall be reserved until superseded by another valid RESERVE command from the initiator that made the reservation, or until released by a RELEASE command from the same initiator, by a BUS DEVICE RESET message from any initiator, or by a hard RESET condition. If either of the last two conditions occur, the next command from each initiator shall be terminated with CHECK CONDITION status and the sense key shall be set to UNIT ATTENTION.

c) If the reservation request conflicts with a reservation already active the target shall return RESERVATION CONFLICT status.

If the element bit is one, and the element reservation option is not implemented, the RESERVE command shall be terminated with CHECK CONDITION status. The sense key shall be set to ILLEGAL REQUEST.

The size of the element list shall be defined by the element list length parameter. The element list shall consist of zero or more descriptors as shown in table 344. Each element list descriptor defines a series of elements beginning at the specified element address for the specified number of elements. If the number of elements is zero, the element list shall begin at the specified element address and continue through the last element address on the unit.

Table 344 - Data format of element list descriptors

Bit / Byte	7	6	5	4	3	2	1	0
0	Reserved							
1								
2	(MSB) Number of elements							
3								(LSB)
4	(MSB) Element address							
5								(LSB)

If an initiator issues a command to an element that has been reserved by a different initiator, the command shall not be performed and the command shall be terminated with a RESERVATION CONFLICT status. If a reservation conflict precludes any part of the command, none of the command shall be performed.

17.2.8.3 Third party reservation

The third-party reservation option of the RESERVE command allows an initiator to reserve a unit or elements within a unit for another SCSI device.

If the third-party (3rdPty) bit is zero, the third-party reservation option is not requested. If the 3rdPty bit is one and the third-party reservation option is implemented, the RESERVE command shall reserve the specified unit or elements for the SCSI device specified in the third-party device ID field. The target shall preserve the reservation until it is superseded by another valid RESERVE command from the initiator that made the reservation or until it is released by the same initiator, by a BUS DEVICE RESET message from any initiator, or a hard RESET condition. The target shall ignore any attempt to release the reservation made by any other initiator.

If the 3rdPty bit is one and the third-party reservation option is not implemented, the target shall reject the RESERVE command with CHECK CONDITION status and the sense key shall be set to ILLEGAL REQUEST.

Copyright International Organization for Standardization
Provided by IHS under license with ISO
No reproduction or networking permitted without license from IHS Not for Resale

17.2.8.4 Superseding reservations

An initiator that holds a current reservation may modify that reservation by issuing another RESERVE command to the same unit and, if the element bit is one, using the same reservation identification. The superseding RESERVE command shall release the previous reservation in place when the new reservation request is granted. The current reservation shall not be modified if the new reservation request cannot be granted. If the superseding reservation cannot be granted because of conflicts with a previous active reservation (other than the reservation being superseded), the target shall return RESERVATION CONFLICT status.

NOTE 206 Superseding reservations are principally intended to allow the SCSI device ID to be changed on a reservation using the third-party reservation option.

17.2.9 SEND VOLUME TAG command

The SEND VOLUME TAG command (see table 345) transfers a volume tag template to be searched for or new volume tag information for one or more media changer elements. The function of the command is conveyed by the send action code field. The REQUEST VOLUME ELEMENT ADDRESS command is used to transfer the results of a translate search operation.

Table 345 - SEND VOLUME TAG command

Bit / Byte	7	6	5	4	3	2	1	0
0	Operation code (B6h)							
1	Logical unit number			Reserved	Element type code			
2	(MSB) Element address							
3								(LSB)
4	Reserved							
5	Reserved			Send action code				
6	Reserved							
7								
8	(MSB) Parameter list length							
9								(LSB)
10	Reserved							
11	Control							

The element type code field specifies an element type specification as defined in 17.2.5. If the send action code indicates a translate operation, this field indicates the element types to be searched. If this is a zero, all element types are candidates for a translate operation. If the send action code does not indicate a translate, this field shall be treated as reserved.

The send action code field gives the function to be performed by this command as listed in table 346.

Copyright International Organization for Standardization
Provided by IHS under license with ISO
No reproduction or networking permitted without license from IHS Not for Resale

Table 346 - Send volume tag action codes

Code	Description
0h	Translate - search all defined volume tags
1h	Translate - search only primary volume tags
2h	Translate - search only alternate volume tags
3h	Reserved
4h	Translate - search all defined tags - ignore sequence numbers
5h	Translate - search primary tags - ignore sequence numbers
6h	Translate - search alternate tags - ignore sequence numbers
7h	Reserved
8h	Assert - as the primary volume tag - if tag now undefined
9h	Assert - as the alternate volume tag - if tag now undefined
Ah	Replace - the primary volume tag - current tag ignored
Bh	Replace - the alternate volume tag - current tag ignored
Ch	Undefined - the primary volume tag - current tag ignored
Dh	Undefined - the alternate volume tag - current tag ignored
Eh - 1Bh	Reserved
1Ch - 1Fh	Vendor-specific

Translate operations request that the target search the volume tag information available to it for elements whose volume tag information matches the template given by the command parameters. The resulting information is reported via the REQUEST VOLUME ELEMENT ADDRESS command.

Assert operations define volume tag information for a single element. A CHECK CONDITION with ILLEGAL REQUEST is reported if the subject element already has defined volume tag information; in this case, the original volume tag information shall remain unaltered.

Replace operations define volume tag information for a single element. Any previously defined volume tag information is overwritten.

Undefined operations cause previously defined volume tag information for the specified element to be cleared. It shall not be considered an error to undefined volume tag information that was not previously defined.

A medium changer device that implements volume tag information may choose to not implement the facilities that modify the volume tag information. With such an implementation a request for the assert, replace or undefined functions would cause the SEND VOLUME TAG command to be terminated with CHECK CONDITION and a sense key of ILLEGAL REQUEST.

The element address field gives a medium changer element address whose interpretation depends on the send action code received with this command. When the send action code is a translate, (code values 0h .. 7h), the element address field gives the starting element to be examined for satisfaction of the search criteria. When the send action code is other than translate, (i.e. assert, replace, and undefined, code values 8h .. Dh), the element address field gives the particular element whose volume tag information is to be modified.

The volume tag information used for translate, assert and replace functions is defined in table 347. No parameters are necessary for undefined operations.

Copyright International Organization for Standardization
Provided by IHS under license with ISO
No reproduction or networking permitted without license from IHS Not for Resale

Table 347 - Send volume tag parameters format

Bit / Byte	7	6	5	4	3	2	1	0
0	Volume identification template field							
31								
32	Reserved							
33								
34	(MSB) Minimum volume sequence number							
35								(LSB)
36	Reserved							
37								
38	(MSB) Maximum volume sequence number							
39								(LSB)

The volume identification template field specifies a search template for translate functions and the exact value of the new volume identification information for other SEND VOLUME TAG command functions.

As a search template, this field may contain the wildcard characters '*' and '?' (2Ah and 3Fh). '*' will match any string of characters, when it appears in a template the remainder of the template is not used. '?' will match any single character.

For a function other than translate, this field may not contain the '*' or '?' wildcard characters.

The minimum volume sequence number field specifies the new sequence number for the assert and replace functions. For a translate, this specifies the least value that will meet the search specification.

The maximum volume sequence number field specifies the greatest value that will meet the search specification. This field is ignored on functions other than translate.

17.3 Parameters for medium changer devices

17.3.1 Diagnostic parameters

This subclause defines the descriptors and pages for diagnostic parameters used with medium changer devices.

The diagnostic page codes for medium changer devices are defined in table 348.

Table 348 - Diagnostic page codes

Page code	Description	Subclause
00h	Supported diagnostic pages	8.3.1.1
01h - 3Fh	Reserved (for all device type pages)	
40h - 7Fh	Reserved	
80h - FFh	Vendor-specific pages	

Copyright International Organization for Standardization
Provided by IHS under license with ISO
No reproduction or networking permitted without license from IHS Not for Resale

17.3.2 Log parameters

This subclause defines the descriptors and pages for log parameters used with medium changer devices.

The log page codes for medium changer devices are defined in table 349.

Table 349 - Log page codes

Page code	Description	Subclause
00h	Supported log pages	8.3.2.5
06h	Non-medium error page	8.3.2.4
07h	Last n error events page	8.3.2.3
01h - 05h	Reserved	
08h - 2Fh	Reserved	
3Fh	Reserved	
30h - 3Eh	Vendor-specific pages	

17.3.3 Mode parameters

This subclause defines the descriptors and pages for mode parameters used with medium changer devices.

The mode parameter list, including the mode parameter header and mode block descriptor, are defined in 8.3.3.

The medium-type code field is contained in the mode parameter header (see 8.3.3). This field is reserved for medium changer devices.

The device specific parameter field is contained in the mode parameter header (see 8.3.3). This field is reserved for medium changer devices.

The density code field is contained in the mode parameter block descriptor (see 8.3.3). This field is reserved for medium changer devices.

The mode page codes for medium changer devices are shown in table 350.

Table 350 - Mode page codes

Page code	Description	Subclause
1Fh	Device capabilities	17.3.3.1
1Dh	Element address assignment	17.3.3.2
1Eh	Transport geometry parameters	17.3.3.3
01h - 1Ch	Reserved	
00h	Vendor-specific (does not require page format)	
20h - 3Eh	Vendor-specific (page format required)	
3Fh	Return all pages (valid only for the MODE SENSE command)	

Copyright International Organization for Standardization
Provided by IHS under license with ISO
No reproduction or networking permitted without license from IHS Not for Resale

17.3.3.1 Device capabilities page

The device capabilities page (see table 351) defines characteristics of the element types on this medium changer implementation. This information may be employed by the initiator to determine functions permitted by the MOVE MEDIUM and EXCHANGE MEDIUM commands.

Table 351 - Device capabilities page

Bit / Byte	7	6	5	4	3	2	1	0
0	PS	Reserved	Page code (1Fh)					
1	Parameter length (12h)							
2	Reserved				StorDT	StorI/E	StorST	StorMT
3	Reserved							
4	Reserved				MT->DT	MT->I/E	MT->ST	MT->MT
5	Reserved				ST->DT	ST->I/E	ST->ST	ST->MT
6	Reserved				I/E->DT	I/E->I/E	I/E->ST	I/E->MT
7	Reserved				DT->DT	DT->I/E	DT->ST	DT->MT
8 — 11	Reserved							
12	Reserved				MT<>DT	MT<>I/E	MT<>ST	MT<>MT
13	Reserved				ST<>DT	ST<>I/E	ST<>ST	ST<>MT
14	Reserved				I/E<>DT	I/E<>I/E	I/E<>ST	I/E<>MT
15	Reserved				DT<>DT	DT<>I/E	DT<>ST	DT<>MT

The parameters savable (PS) bit is only used with the MODE SENSE command. This bit is reserved with the MODE SELECT command. A PS bit of one indicates that the target is capable of saving the page in a non-volatile, vendor-specific location.

In the field names on this page, the following element type abbreviations are used:

MT a medium transport element,
ST a storage element,
I/E an import export element, and
DT a data transfer element.

In the descriptions, XX and YY are any of the element type abbreviations.

A StorXX bit value of one indicated that the defined elements of type XX may provide independent storage for a unit of media. A value of zero indicates that elements of type XX provide virtual sources or destinations, that the location of the unit of media is provided by an element of some other type. The value of StorST is one by the definition of that type. See 17.1.1.

An XX->YY bit value of one indicates that the medium changer device supports all MOVE MEDIUM commands where the source is element type XX, the destination is element type YY and these element addresses are otherwise valid. An XX->YY bit value of zero indicates that these MOVE MEDIUM commands may or may not be valid depending on the particular elements requested. Those which are not valid will be rejected with ILLEGAL REQUEST.

Copyright International Organization for Standardization
Provided by IHS under license with ISO
No reproduction or networking permitted without license from IHS Not for Resale

An XX<>YY bit value of one indicates that the medium changer device supports all EXCHANGE MEDIUM commands where the source is element type XX, destination 1 is element type YY, destination 2 is the same type as the source element type and these element addresses are otherwise valid. An XX<>YY bit value of zero indicates that these EXCHANGE MEDIUM commands may or may not be valid depending on the particular elements requested. Those which are not valid will be rejected with ILLEGAL REQUEST.

17.3.3.2 Element address assignment page

The element address assignment page (see table 352) is used to assign addresses to the elements of the medium changer (MODE SELECT) and to report those assignments (MODE SENSE). This page also defines the number of each type of element present.

Table 352 - Element address assignment page

Bit / Byte	7	6	5	4	3	2	1	0
0	PS	Reserved	Page code (1Dh)					
1	Parameter length (12h)							
2	(MSB)							
3	Medium transport element address							(LSB)
4	(MSB)							
5	Number of medium transport elements							(LSB)
6	(MSB)							
7	First storage element address							(LSB)
8	(MSB)							
9	Number of storage elements							(LSB)
10	(MSB)							
11	First import export element address							(LSB)
12	(MSB)							
13	Number of import export elements							(LSB)
14	(MSB)							
15	First data transfer element address							(LSB)
16	(MSB)							
17	Number of data transfer elements							(LSB)
18	Reserved							
19								

The parameters savable (PS) bit is only used with the MODE SENSE command. This bit is reserved with the MODE SELECT command. A PS bit of one indicates that the target is capable of saving the page in a non-volatile vendor-specific location.

The first medium transport element address field identifies the first medium transport element contained in the medium changer (other than the default medium transport address of zero). The number of medium transport elements field defines the total number of medium transport elements contained in the medium changer. If the number of medium transport elements field in a MODE SELECT command is greater than the default value

Copyright International Organization for Standardization
Provided by IHS under license with ISO
No reproduction or networking permitted without license from IHS Not for Resale

returned in the MODE SENSE parameter data, the target shall return CHECK CONDITION status and set the sense key to ILLEGAL REQUEST.

The first storage element address field identifies the first medium storage element contained in the medium changer. The number of storage elements field defines the total number of medium storage elements contained in the medium changer. If the number of medium storage elements field in a MODE SELECT command is greater than the default value returned in the MODE SENSE parameter data, the target shall return CHECK CONDITION status and set the sense key to ILLEGAL REQUEST.

The first import export element address field identifies the first medium portal that is accessible both by the medium transport devices and also by an operator from outside the medium changer. The number of import export elements field defines the total number of import export elements contained in the medium changer and accessible to the medium transport elements. If the number of import export elements field in a MODE SELECT command is greater than the default value returned in the MODE SENSE parameter data, the target shall return CHECK CONDITION status and set the sense key to ILLEGAL REQUEST .

NOTE 207 The number of import export elements may be zero.

The first data transfer element address field identifies the first data transfer element contained in the medium changer. The data transfer elements may be either read/write or read-only devices. The number of data transfer field defines the total number of data transfer elements contained within the medium changer and accessible to the medium transport elements. If the number of data transfer elements field in a MODE SELECT command is greater than the default value returned in the MODE SENSE parameter data, the target shall return CHECK CONDITION status and set the sense key to ILLEGAL REQUEST .

Each element in the medium changer must have a unique address. If the address ranges defined for any of the element types overlap, the target shall return CHECK CONDITION status and set the sense key to ILLEGAL REQUEST.

--`,,```,,,,````-`-`,,`,,`,`,,`---

Copyright International Organization for Standardization
Provided by IHS under license with ISO
No reproduction or networking permitted without license from IHS Not for Resale

17.3.3.3 Transport geometry parameters page

The transport geometry parameters page (see table 353) defines whether each medium transport element is a member of a set of elements that share a common robotics subsystem and whether the element is capable of media rotation. One transport geometry descriptor is transferred for each medium transport element, beginning with the first medium transport element. (Other than the default transport element address of zero.)

Table 353 - Transport geometry parameters page

Bit / Byte	7	6	5	4	3	2	1	0
0	PS	Reserved	Page code (1Eh)					
1	Parameter length							
	Transport geometry descriptor(s)							
0	Reserved							Rotate
1	Member number in transport element set							

The parameters savable (PS) bit is only used with the MODE SENSE command. This bit is reserved with the MODE SELECT command. A PS bit of one indicates that the target is capable of saving the page in a non-volatile vendor-specific location.

The parameter length specifies the number of bytes of transport geometry descriptors that follow. The geometry of each medium transport element is defined using a two-byte field as defined below.

A rotate bit of one indicates that the medium transport element supports media rotation for handling double-sided media. A rotate bit of zero indicates that the medium transport element does not support media rotation.

The member number in set indicates the position of this element in a set of medium transport elements that share a common robotics subsystem. The first element in a set has a member number of zero.

NOTE 208 This page reports information about the way transport elements are physically clustered in a system. The model for this is a medium changer device with more than one independent robotics subsystem, where each of these supports multiple transport elements. The elements that are supported by a particular robotics subsystem form a set. This sort of information is helpful for optimization and error recovery in such a large system. (Recall that in the model for this device type, see 17.1, the individual transport element is addressed not the robotics subsystem. An element is defined to be a place where a unit of media may be at any point in time.)

Copyright International Organization for Standardization
Provided by IHS under license with ISO
No reproduction or networking permitted without license from IHS Not for Resale

17.4 Definitions specific to medium changer devices

17.4.1 data transfer element: A component of a medium changer used to access the data stored on a unit of media. The address in medium changer element space of a primary device.

17.4.2 element: An addressable physical component of a medium changer device that can serve as the location of a unit of media.

17.4.3 import export element: A location within a medium changer device that can be accessed by both the medium transport elements and by the operator.

17.4.4 medium transport element: A component of a medium changer device that is used to move units of media.

17.4.5 media rotation: The process of changing the orientation of a unit of media. In particular this refers to inverting a two sided media cartridge so that a data transport element that can access only one side at a time can access data on the other side.

17.4.6 primary device: A device for reading or writing data on medium. These devices would typically implement the direct access, sequential access, optical memory device or CD-ROM command sets in this International Standard. Examples are magnetic disk drives, cartridge tape drives, optical disk drives and CD-ROM drives. Use in a medium changer environment implies that the device supports removable media.

17.4.7 storage element: A component of a medium changer device used for inactive storage of a unit of media.

Copyright International Organization for Standardization
Provided by IHS under license with ISO
No reproduction or networking permitted without license from IHS Not for Resale

18 Communications devices

18.1 Communications device model

A communications device provides a facility to send and receive information over some medium (usually an electrical or fiber-optic cable) using a defined protocol to one or more other systems that support the same protocol. The media and protocols are often specified in national or International Standards, although some are proprietary. Within this subclause, the protocol used on the external medium is called the external protocol.

The SCSI communications device model assumes that information to control the external protocol is embedded within the data transferred by the SEND and GET MESSAGE commands. The structure of the data transferred by these commands is not defined by this International Standard. Vendor-specific mode pages may be defined to provide additional control over the external protocol.

The SCSI communications device is a target with the characteristics of a network access device, typically attached to a local area network (LAN), public telecommunications network, private telecommunications network, or packet switching network, etc., with no theoretical limits. Such a communications device is often called a network node. The communications device transmits or receives packets of data as requested by the initiator. The contents and meaning of the data packets is not defined by this International Standard. The bytes in the data packets may or may not contain addressing, path selection, or path control information identifying separate data streams. Additional information may be provided by the stream selection identifier found in the ten and twelve byte SEND MESSAGE and GET MESSAGE commands.

In the SCSI communications device, the target accepts and provides the data packets transferred in accordance with commands received from the initiator. There is an assumption that the initiator and the communications device know the rules by which information is exchanged between them, how the information is to be interpreted by the communications device, and when it is allowable to exchange the information. These rules are not specified by this International Standard.

The initiator requests that the communications device accept a packet of data by transmitting a SEND MESSAGE command. The initiator requests that the communications device return a packet of data by transmitting a GET MESSAGE command. The communications device also supports commands related to configuration of the network access device and network management of the particular environment. MODE SENSE and MODE SELECT are examples of these configuration commands.

If a communications device temporarily has no resource available to handle a data packet from the initiator, or has no data packet to provide to the initiator, or has no resources assigned to perform the operation, the device may then choose one of the following responses:

a) Terminate the command with CHECK CONDITION status. The sense key shall be set to NOT READY and the appropriate additional sense code for the condition.
b) Disconnect until the necessary resource or data packet becomes available, and then reconnect to the initiator and resume the operation.
c) Terminate the command with BUSY status.

More than one logical unit can be implemented by a communications device. Logical units can serve as multiple paths to a single network access device, and/or each logical unit can serve as a discrete path to different resources within the device. A single logical unit may also serve as a path to multiple resources if the communications device can interpret information within the data packet and route the packet to the appropriate resource. If the logical unit addressed by the initiator does not have an available resource or data packet associated with it, the communications device may choose to treat the logical unit as an invalid logical unit (see 7.5.3) or respond as described in the previous paragraph.

If the communications device determines that an error or unusual condition has occurred while performing an operation specified by the contents of a data packet, the information describing the condition is normally returned

Copyright International Organization for Standardization
Provided by IHS under license with ISO
No reproduction or networking permitted without license from IHS Not for Resale

as a part of a data packet from another network device. If the communications device determines that an error or unusual condition has occurred while either executing the SCSI command from the initiator, or during a network medium access transaction, the command is terminated with a CHECK CONDITION. The failures are identified through a REQUEST SENSE command.

The SCSI communications device is distinguished from an SCSI processor device by the fact that the primary destination of the data packets transferred to the communications device is not the target device itself, but another network node. A SCSI communications device passes the data on to an ultimate destination outside the target through a network. In contrast, the SCSI processor device is itself the primary destination of the data packets. Devices requiring protocols and command sets that are totally incompatible with the communications device protocols should be examined carefully to be sure that the incompatibilities are based on functional requirements.

18.1.1 Implementation examples

Several examples of communications device implementations are provided to clarify the range of utility of this device type.

18.1.1.1 Host-to-host communications

In this example of host to host communications, only the SEND MESSAGE command is used.

A communications device (comm A) is attached to a network (net A), and another communications device (comm B) is attached to a network (net B). Comm A takes the initiator role and selects a communications device (comm B), transmitting a packet to comm B using the SEND MESSAGE command. After transmitting the packet on the attached network medium (net B), the action required by the SEND MESSAGE command, comm B assumes the initiator mode and selects comm A as a communications device, and uses a SEND MESSAGE command to transmit a packet on the network (net A) attached to comm A.

Note 209 The SEND MESSAGE command is sufficient to perform complete transactions between communications devices if comm A and comm B act as initiators. This provides the function of a network bridge or gateway for high bandwidth intercommunication among nearby host processors.

18.1.1.2 Host-to-device communications

In this example of host to device communications, the SEND MESSAGE and GET MESSAGE commands are used.

A host system, host A, takes the initiator role and selects a communications device (comm A) attached to a network (net A), transmitting a packet on network net A to some other network node(s) using the SEND MESSAGE command to comm A. Host A then assumes that a result will be obtained by the other network node(s) consistent with rules understood by all involved network devices. Host A generates a GET MESSAGE command to obtain packets from other network nodes. If there are no packets that need handling pending at comm A, comm A may disconnect until a packet arrives. Comm A can then complete the transaction, reconnect to host A and the requested data packet can be returned to host A. Note that Host A need not support target mode and Comm A need not support initiator mode to successfully complete an exchange between the two devices. The host system (host A) can be replaced by a communications device that is capable of acting as an initiator.

18.1.1.3 Multiple role communications

In this example of multiple role communications, the SEND MESSAGE and GET MESSAGE commands are used. The device acts as both a host and a communications device, depending on its needs and the requests made in the network.

Copyright International Organization for Standardization
Provided by IHS under license with ISO
No reproduction or networking permitted without license from IHS Not for Resale

A communications device (comm A) is attached to a network (net A), and another communications device (comm B) is attached to a network (net B). Comm A takes the initiator role and selects a communications device (comm B). Comm A transmits a packet for network net B using the SEND MESSAGE command to comm B. Comm A then requests data packets from net B by issuing a GET MESSAGE command to the comm B device. Following these actions, comm B assumes the initiator role and transmits a packet using the SEND MESSAGE command to comm A for transmission to network node(s) located on net A. Comm B then requests data packets from net A by issuing a GET MESSAGE command to comm A.

18.2 Command descriptions for communications devices

The commands for communications devices shall be as shown in table 354.

Table 354 - Commands for communications devices

Command name	Operation code	Type	Subclause
CHANGE DEFINITION	40h	O	8.2.1
GET MESSAGE(06)	08h	O	8.2.17
GET MESSAGE(10)	28h	O	18.2.2
GET MESSAGE(12)	A8h	O	18.2.3
INQUIRY	12h	M	8.2.5
LOG SELECT	4Ch	O	8.2.6
LOG SENSE	4Dh	O	8.2.7
MODE SELECT(06)	15h	O	8.2.8
MODE SELECT(10)	55h	O	8.2.9
MODE SENSE(06)	1Ah	O	8.2.10
MODE SENSE(10)	5Ah	O	8.2.11
READ BUFFER	3Ch	O	8.2.12
RECEIVE DIAGNOSTIC RESULTS	1Ch	O	8.2.13
REQUEST SENSE	03h	M	8.2.14
SEND DIAGNOSTIC	1Dh	M	8.2.15
SEND MESSAGE(06)	0Ah	M	18.2.4
SEND MESSAGE(10)	2Ah	O	18.2.5
SEND MESSAGE(12)	AAh	O	18.2.6
TEST UNIT READY	00h	M	8.2.16
WRITE BUFFER	3Bh	O	8.2.17

Key: M = command implementation is mandatory.
O = command implementation is optional.

All other operation codes for communications devices are reserved for future standardization.

Copyright International Organization for Standardization
Provided by IHS under license with ISO
No reproduction or networking permitted without license from IHS Not for Resale

18.2.1 GET MESSAGE(06) command

The GET MESSAGE(06) command (see table 355) transfers data from the target to the initiator.

Table 355 - GET MESSAGE(06) command

Bit / Byte	7	6	5	4	3	2	1	0
0	Operation code (08h)							
1	Logical unit number			Reserved				
2	(MSB)							
3	Allocation length							
4								(LSB)
5	Control							

18.2.2 GET MESSAGE(10) command

The GET MESSAGE(10) command (see table 356) transfers data from the target to the initiator.

Table 356 - GET MESSAGE(10) command

Bit / Byte	7	6	5	4	3	2	1	0
0	Operation code (28h)							
1	Logical unit number			Reserved				
2	Reserved							
3	Reserved							
4	(MSB)							
5	Stream selection							(LSB)
6	Reserved							
7	(MSB)							
8	Allocation length							(LSB)
9	Control							

The stream selection field specifies a further level of addressing for the data, so that it can be accessed by the target from the appropriate data stream.

Copyright International Organization for Standardization
Provided by IHS under license with ISO
No reproduction or networking permitted without license from IHS Not for Resale

18.2.3 GET MESSAGE(12) command

The GET MESSAGE(12) command (see table 357) transfers data from the target to the initiator.

Table 357 - GET MESSAGE(12) command

Bit / Byte	7	6	5	4	3	2	1	0
0	Operation code (A8h)							
1	Logical unit number			Reserved				
2	Reserved							
3	Reserved							
4	(MSB)			Stream selection				
5								(LSB)
6	(MSB)			Allocation length				
7								
8								
9								(LSB)
10	Reserved							
11	Control							

The stream selection field specifies a further level of addressing for the data, so that it can be accessed by the target from the appropriate data stream.

18.2.4 SEND MESSAGE(06) command

The SEND MESSAGE(06) command (see table 358) transfers data from the initiator to the target.

Table 358 - SEND MESSAGE(06) command

Bit / Byte	7	6	5	4	3	2	1	0
0	Operation code (0Ah)							
1	Logical unit number			Reserved				
2	(MSB)			Transfer length				
3								
4								(LSB)
5	Control							

The transfer length specifies the length in bytes of data that shall be sent during the DATA OUT phase. A transfer length of zero indicates that no data shall be sent. This condition shall not be considered an error.

Copyright International Organization for Standardization
Provided by IHS under license with ISO
No reproduction or networking permitted without license from IHS Not for Resale

18.2.5 SEND MESSAGE(10) command

The SEND MESSAGE(10) command (see table 359) transfers data from the initiator to the target.

Table 359 - SEND MESSAGE(10) command

Bit / Byte	7	6	5	4	3	2	1	0
0	Operation code (2Ah)							
1	Logical unit number			Reserved				
2	Reserved							
3	Reserved							
4	(MSB)			Stream selection				
5								(LSB)
6	Reserved							
7	(MSB)			Transfer length				
8								(LSB)
9	Control							

The stream selection field specifies a further level of addressing for the data, so that it can be directed by the target to the appropriate data stream.

Please refer to the SEND MESSAGE(06) command for a description of the fields in this command.

18.2.6 SEND MESSAGE(12) command

The SEND MESSAGE(12) command (see table 360) transfers data from the initiator to the target.

Copyright International Organization for Standardization
Provided by IHS under license with ISO
No reproduction or networking permitted without license from IHS Not for Resale

Table 360 - SEND MESSAGE(12) command

Bit / Byte	7	6	5	4	3	2	1	0
0	Operation code (AAh)							
1	Logical unit number			Reserved				
2	Reserved							
3	Reserved							
4	(MSB)			Stream selection				
5								(LSB)
6	(MSB)							
7				Transfer length				
8								
9								(LSB)
10	Reserved							
11	Control							

The stream selection field specifies a further level of addressing for the data, so that it can be directed by the target to the appropriate data stream.

Please refer to the SEND MESSAGE(06) command for a description of the fields in this command.

18.3 Parameters for communication devices

18.3.1 Diagnostic parameters

This subclause defines the descriptors and pages for diagnostic parameters used with communication devices.

The diagnostic page codes for communication devices are defined in table 361.

Table 361 - Diagnostic page codes

Page Code	Description	Subclause
00h	Supported log pages	8.3.1.1
01h - 3Fh	Reserved (for all device type pages)	
40h - 7Fh	Reserved	
80h - FFh	Vendor-specific pages	

18.3.2 Log parameters

This subclause defines the descriptors and pages for log parameters used with communication devices.

The log page codes for communication devices are defined in table 362.

Copyright International Organization for Standardization
Provided by IHS under license with ISO
No reproduction or networking permitted without license from IHS Not for Resale

Table 362 - Log page codes

Page code	Description	Subclause
01h	Buffer over-run/under-run page	8.3.2.1
02h	Error counter page (write) page	8.3.2.2
03h	Error counter page (read) page	8.3.2.2
04h	Error counter page (read reverse) page	8.3.2.2
05h	Error counter page (verify) page	8.3.2.2
07h	Last n error events page	8.3.2.3
06h	Non-medium error page	8.3.2.4
00h	Supported log pages	8.3.2.5
08h - 2Fh	Reserved	
30h - 3Eh	Vendor-specific pages	
3Fh	Reserved	

18.3.3 Mode parameters

This subclause defines the descriptors and pages for mode parameters used with communication devices.

The mode parameter list, including the mode parameter header and mode block descriptor, are defined in 8.3.3.

The medium-type code field is contained in the mode parameter header (see 8.3.3). This field is reserved for communications devices.

The device specific parameter field is contained in the mode parameter header (see 8.3.3). This field is reserved for communications devices.

The density code field is contained in the mode parameter block descriptor (see 8.3.3). This field is reserved for communications devices.

The mode page codes for communications devices are shown in table 363.

Table 363 - Mode page codes

Page code	Description	Subclause
0Ah	Control mode page	8.3.3.1
02h	Disconnect-reconnect page	8.3.3.2
09h	Peripheral device page	8.3.3.3
01h	Reserved	
03h - 08h	Reserved	
0Bh - 1Fh	Reserved	
00h	Vendor-specific (does not require page format)	
20h - 3Eh	Vendor-specific (page format required)	
3Fh	Return all pages (valid only for the MODE SENSE command)	

Copyright International Organization for Standardization
Provided by IHS under license with ISO
No reproduction or networking permitted without license from IHS Not for Resale

18.4 Definitions specific to communications devices

18.4.1 communications device: An SCSI device whose principal function is to communicate with one or more other systems, usually over distances that exceed the maximum cable length defined for SCSI.

18.4.2 external medium: The medium used by the communications device to send or receive information to or from one or more communications devices. The other communications devices may or may not use an SCSI interface.

18.4.3 external protocol: The protocol(s) used by the communications device to transfer information over the external medium. The external protocol(s) are not defined by this International Standard.

--`,,```,,,,````-`-`,,`,,`,`,,`---

Copyright International Organization for Standardization
Provided by IHS under license with ISO
No reproduction or networking permitted without license from IHS Not for Resale

Annex A
(informative)

SCSI signal sequence example

This annex is included to provide an example of the signal sequencing of an I/O process that includes most of the SCSI bus phases (see figure 29). In this example, the target does not disconnect from the SCSI bus prior to completing the I/O process.

In a typical system, the computer's host adapter acts as the initiator and the peripheral device's controller acts as the target. In general, this International Standard does not attempt to distinguish between a computer and its host adapter. These functions may be separate or merged. The term initiator encompasses both. The term target refers to the controller portion of the peripheral device, which may be separate (bridge controller) from the peripheral device or merged with it (embedded controller). The term SCSI device refers to a device that may be connected to the SCSI bus. An SCSI device may act in the initiator role, the target role, or both roles.

The following notes apply to figure A.1.

DATA BUS NOTES

1) DB(7) is the most significant bit.
2) DB(7) is the highest priority arbitration bit.
3) DB(P) is the data parity bit (odd). Parity is not valid during the ARBITRATION phase.

BUS PHASE NOTES

1) **BUS FREE phase.** BUS FREE phase begins when the SEL and BSY signals are both continuously false for a bus settle delay. It ends when the BSY signal becomes true. (In the SCSI-1 single-initiator option, BUS FREE phase could also end when the SEL signal became true.)

2) **ARBITRATION phase.** This phase is documented as mandatory in SCSI-2. In SCSI-1, this phase was optional.

   At least one bus free delay after first detecting BUS FREE phase, but no more than a bus set delay after the bus was last free, the initiator asserts the BSY signal and its assigned SCSI device ID bit on the DATA BUS. The initiator waits an arbitration delay, then examines the DATA BUS. If a higher priority SCSI device ID bit is true, the initiator loses arbitration and may release the BSY signal and its SCSI ID bit. Otherwise, the initiator wins arbitration and asserts the SEL signal. All SCSI devices must release the BSY signal and their SCSI ID bit within a bus clear delay after the SEL signal becomes true (even if they have not yet examined the DATA BUS). The winning SCSI device waits at least a bus clear delay plus a bus settle delay after asserting the SEL signal before changing any signals on the bus.

3) **SELECTION phase.** The I/O signal is false during this phase to distinguish it from the RESELECTION phase.

   NON-ARBITRATING SYSTEMS (only permitted in SCSI-1): In such systems, the initiator waits at least a bus clear delay after detecting BUS FREE phase, then it asserts the target's SCSI ID bit and, optionally, the initiator's SCSI ID bit on the DATA BUS. After at least two deskew delays, the initiator asserts the SEL signal.

   ARBITRATING SYSTEMS: In such systems, the SCSI device that won arbitration has both the BSY and SEL signals asserted. After at least a bus clear delay plus a bus settle delay, it places both the target's and the initiator's SCSI ID bits on the DATA BUS. At least two deskew delays later, it releases the BSY signal.

Copyright International Organization for Standardization
Provided by IHS under license with ISO
No reproduction or networking permitted without license from IHS Not for Resale

ALL SYSTEMS: The target determines that it is selected when the SEL signal and its SCSI ID bit are true and the BSY and I/O signals are false for at least a bus settle delay. The target then asserts the BSY signal within a selection abort time after it last determined that it was still being selected. (The target is not required to respond to a selection within a selection abort time; but it must ensure that it will not assert the BSY signal more than a selection abort time after the initiator aborts a selection attempt.)

At least two deskew delays after the initiator detects the BSY signal is true, it releases the SEL signal.

4) **MESSAGE OUT phase.** During this phase the initiator sends an IDENTIFY message to the target. The target asserts the C/D and MSG signals and negates the I/O signal for the message transfer. After detecting the assertion of the REQ signal, the initiator negates the ATN signal before asserting the ACK signal. (Refer to the handshake procedure for the command phase.)

5) **COMMAND phase.** The target asserts the C/D signal and negates the I/O and MSG signals for all of the bytes transferred during this phase. The direction of transfer is from the initiator to the target.

HANDSHAKE PROCEDURE: The target asserts the REQ signal. Upon detecting the REQ signal is true, the initiator drives the DATA BUS to the desired value, waits at least one deskew delay plus a cable skew delay and then asserts the ACK signal. The initiator continues to drive the DATA BUS until the REQ signal is false.

When the ACK signal is true at the target, the target reads the DATA BUS and then negates the REQ signal.

When the REQ signal becomes false at the initiator, the initiator may change or release the DATA BUS and negate the ACK signal.

The target may continue to request command bytes by asserting the REQ signal again. The number of command bytes is determined by the group code (most significant 3 bits) that is contained in the first command byte.

6) **DATA IN phase.** The target asserts the I/O signal and negates the C/D and MSG signal for all of the bytes transferred during this phase. The direction of transfer is from the target to the initiator.

HANDSHAKE PROCEDURE: The target first drives the DATA BUS to their desired values, waits at least one deskew delay plus a cable skew delay, and then asserts the REQ signal. The target continues to drive the DATA BUS until the ACK signal is true.

When the REQ signal is true at the initiator, the initiator reads the DATA BUS and then asserts the ACK signal.

When the ACK signal is true at the target, the target may change or release the DATA BUS and negate the REQ signal.

When the REQ signal is false at the initiator, the initiator negates the ACK signal. After the ACK signal is false, the target may continue the transfer by driving the DATA BUS and asserting the REQ signal as described above.

7) **DATA OUT phase (not shown in the figure).** The target negates the C/D, I/O, and MSG signals for all of the bytes transferred during this phase. The direction of transfer is from the initiator to the target. (Refer to the handshake procedure for the command phase.)

8) **STATUS phase.** The target asserts the C/D and I/O signals and negates the MSG signal for the byte transferred during this phase. The direction of transfer is from the target to the initiator. (Refer to the handshake procedure for the DATA IN phase.)

Copyright International Organization for Standardization
Provided by IHS under license with ISO
No reproduction or networking permitted without license from IHS Not for Resale

9) **MESSAGE IN phase.** The target asserts the C/D, I/O, and MSG signals during the byte transferred during this phase. Typically, a command COMPLETE message would be sent at this point. The direction of transfer is from the target to the initiator. (Refer to the handshake procedure for the DATA IN phase.)

10) **BUS FREE phase.** The target returns to BUS FREE phase by releasing the BSY signal. Both the target and the initiator release all bus signals within a bus clear delay after the BSY signal is continuously false for a bus settle delay.

Copyright International Organization for Standardization
Provided by IHS under license with ISO
No reproduction or networking permitted without license from IHS
Not for Resale

©ISO/IEC

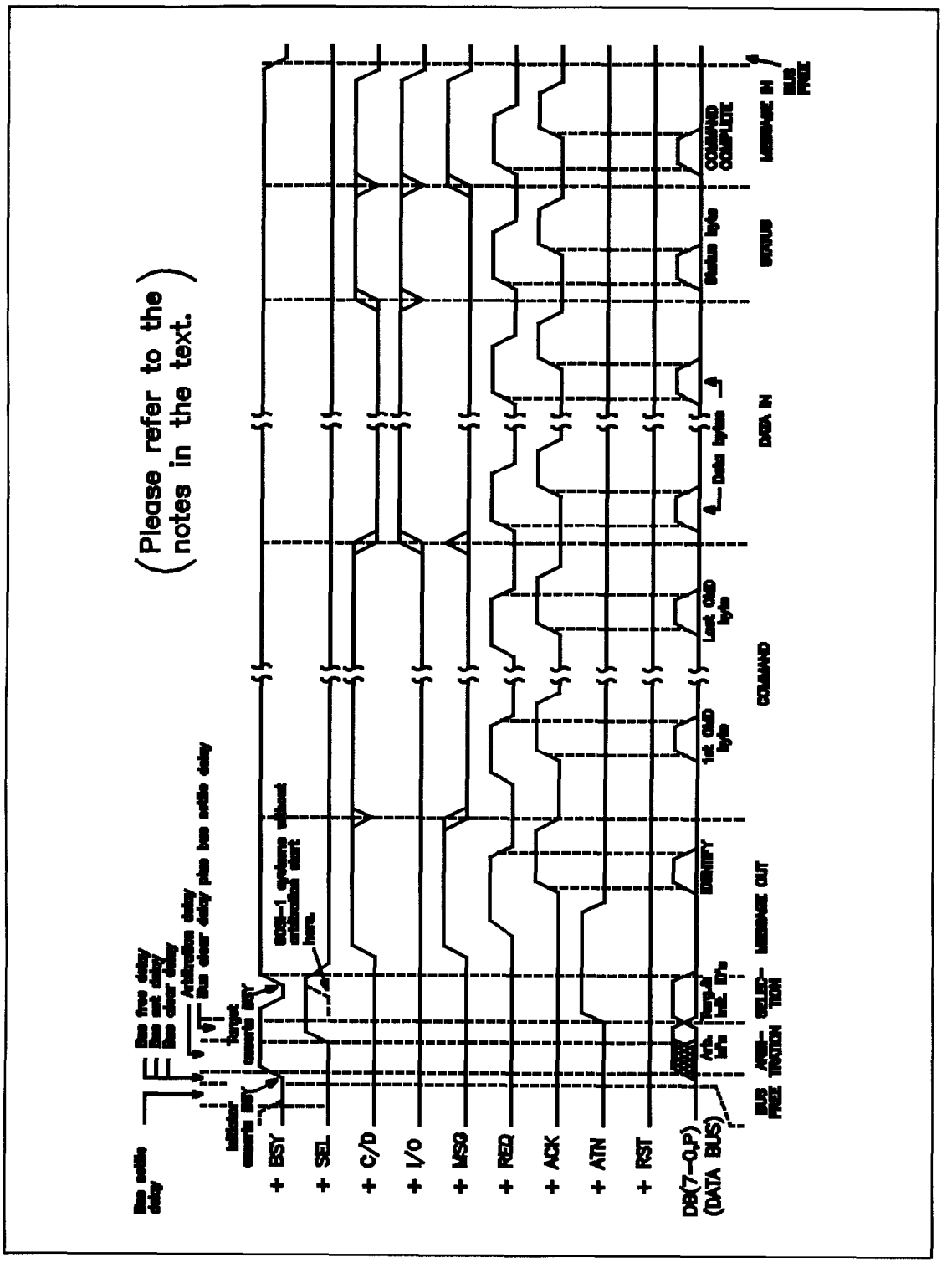

Figure A.1 - SCSI signal sequence example

Copyright International Organization for Standardization
Provided by IHS under license with ISO
No reproduction or networking permitted without license from IHS
Not for Resale

Annex B
(informative)

Fast SCSI skew time

This annex is included to explain the skew budget for the fast SCSI option which is defined in Clause 4.

Synchronous transfer rates using a transfer period between 100 ns and 200 ns are known as the fast SCSI option. Fast data transfer times have been tested using the following skew budget (see table B.1) with the differential alternative using transceivers with 25 m of 0,080 42 mm^2 (28 AWG) twisted pair cable as specified in 5.2.3. The transceivers were subjected to a maximum temperature difference of 25° C and a maximum of 200 mV of V^{CC} difference.

Table B.1 - Fast SCSI jitter budget

Parameter label		Description	Jitter budget +/- ns
	a	clock offset	5
	b	transmitting logic skew	3
Transmitting	c	foil delay	1
Device	d	transmitter propogation delay skew	6
	e	foil delay	1
	f	drop cable propogation delay	1
-- Connector	--	----------	----------
	g	external cable - skew between pairs	5
Cable	h	distortion due to cable impedance	1
	i	distortion due to intersymbol interferance	2
	j	bias distortion	2
-- Connector	--	----------	----------
	k	drop cable propogation delay	1
Receiving	l	foil delay	1
Device	m	receiver propogation delay skew	9
	n	foil delay	1
	o	logic setup/hold	5
		total jitter budget	44

Mapping the above jitter or skew budget to the SCSI format in 5.7 and 5.8 is done in Table B.2.

Table B.2 - Mapping of jitter to SCSI

SCSI timing parameter	Calculation	Value (ns)
Fast cable skew delay	g	5
Fast deskew delay	SUM(h..n)	20 (note 1)
Fast hold time	o	10 (note 1)
Fast assertion period	(note 2)	30
Fast negation period	(note 2)	30

Notes
1) Value is rounded up from the jitter budget.
2) The fast assertion period and fast negation period are derived from isolated pulse mesurements and represent a minimum pulse width with a satisfactory margin.

Copyright International Organization for Standardization
Provided by IHS under license with ISO
No reproduction or networking permitted without license from IHS Not for Resale

The maximum driver skew allowed was 6 ns (t_{PLH} min. - t_{PHL} max.) and the maximum receiver skew tested was 9 ns (t_{PLH} min. - t_{PHL} max.). Values greater than these could be used if other numbers could be reduced -- the sum is what is important.

Fast data transfer timing parameters were not tested for the single-ended transceiver option prior to publication of this International Standard.

--`,,```,,,,````-`-`,,`,,`,`,,`---

Copyright International Organization for Standardization
Provided by IHS under license with ISO
No reproduction or networking permitted without license from IHS Not for Resale

Annex C
(informative)

Other SCSI standardization activities

This annex provides information on other formal standardization activities related to SCSI.

C.1 SCSI-3 standards projects

Accredited Standards Committee X3 has approved several SCSI-3 projects to enhance and restructure the SCSI-2 standard as shown in figure C.1. These projects (except fibre channel) are assigned to the X3T10 Technical Committee which developed this International Standard and the SCSI-1 standard. Please contact the Chairman of X3T10 for further information concerning these projects.

C.2 Digital data exchange for color electronic prepress systems

Accredited Standards Committee IT8 has developed several standards pertaining to the exchange of digital data between color electronic prepress systems. These devices are used for high quality color printing. At least one of the IT8 projects involves transferring such data over SCSI. Please contact the Secretariat of IT8 for further information concerning their projects.

C.3 Fibre channel

Accredited Standards Committee X3 has approved a project to develop a fibre optic channel physical layer for the Intelligent Peripheral Interface (IPI), SCSI, and the High Performance Parallel Interface (HIPPI). This project is assigned to the X3T11 Technical Committee. Please contact the Chairman of X3T11 for further information concerning this project.

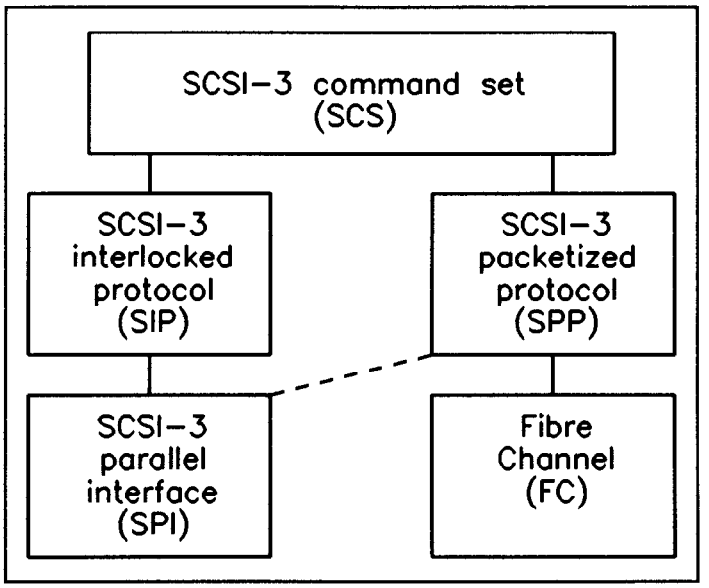

Figure C.1 - SCSI-3 standards structure

Copyright International Organization for Standardization
Provided by IHS under license with ISO
No reproduction or networking permitted without license from IHS
Not for Resale

Annex D
(informative)

Numeric order codes

This annex contains SCSI-2 additional sense codes and operation codes in numeric order as a reference. In the event of a conflict with between the codes in this annex and the body of this International Standard, the codes in the body should be regarded as correct.

Table D.1 is a numerical order listing of the additional sense codes and the additional sense code qualifiers.

Table D.1 - ASC and ASCQ assignments

```
            D - DIRECT ACCESS DEVICE
            .T - SEQUENTIAL ACCESS DEVICE
            . L - PRINTER DEVICE
            .  P - PROCESSOR DEVICE
            .  .W - WRITE ONCE READ MULTIPLE DEVICE
            .  . R - READ ONLY (CD-ROM) DEVICE
            .  .  S - SCANNER DEVICE
            .  .  .O - OPTICAL MEMORY DEVICE
            .  .  . M - MEDIA CHANGER DEVICE
            .  .  .  C - COMMUNICATION DEVICE
            .  .  .  .
ASC  ASCQ   DTLPWRSOMC  DESCRIPTION
---  ----   ---------  -----------
 00   00    DTLPWRSOMC  NO ADDITIONAL SENSE INFORMATION
 00   01     T          FILEMARK DETECTED
 00   02     T    S     END-OF-PARTITION MEDIUM DETECTED
 00   03     T          SETMARK DETECTED
 00   04     T    S     BEGINNING-OF-PARTITION MEDIUM DETECTED
 00   05     T    S     END-OF-DATA DETECTED
 00   06    DTLPWRSOMC  I/O PROCESS TERMINATED
 00   11         R      AUDIO PLAY OPERATION IN PROGRESS
 00   12         R      AUDIO PLAY OPERATION PAUSED
 00   13         R      AUDIO PLAY OPERATION SUCCESSFULLY COMPLETED
 00   14         R      AUDIO PLAY OPERATION STOPPED DUE TO ERROR
 00   15         R      NO CURRENT AUDIO STATUS TO RETURN
 01   00    D   W  O    NO INDEX/SECTOR SIGNAL
 02   00    D   WR OM   NO SEEK COMPLETE
 03   00    DTL W SO    PERIPHERAL DEVICE WRITE FAULT
 03   01     T          NO WRITE CURRENT
 03   02     T          EXCESSIVE WRITE ERRORS
 04   00    DTLPWRSOMC  LOGICAL UNIT NOT READY, CAUSE NOT REPORTABLE
 04   01    DTLPWRSOMC  LOGICAL UNIT IS IN PROCESS OF BECOMING READY
 04   02    DTLPWRSOMC  LOGICAL UNIT NOT READY, INITIALIZING COMMAND REQUIRED
 04   03    DTLPWRSOMC  LOGICAL UNIT NOT READY, MANUAL INTERVENTION REQUIRED
 04   04    DTL    O    LOGICAL UNIT NOT READY, FORMAT IN PROGRESS
 05   00    DTL WRSOMC  LOGICAL UNIT DOES NOT RESPOND TO SELECTION
 06   00    D   WR OM  NO  REFERENCE POSITION FOUND
 07   00    DTL WRSOM   MULTIPLE PERIPHERAL DEVICES SELECTED
 08   00    DTL WRSOMC  LOGICAL UNIT COMMUNICATION FAILURE
 08   01    DTL WRSOMC  LOGICAL UNIT COMMUNICATION TIME-OUT
 08   02    DTL WRSOMC  LOGICAL UNIT COMMUNICATION PARITY ERROR
 09   00    DT  WR O    TRACK FOLLOWING ERROR
 09   01        WR O    TRACKING SERVO FAILURE
 09   02        WR O    FOCUS SERVO FAILURE
 09   03        WR O    SPINDLE SERVO FAILURE
```


Copyright International Organization for Standardization
Provided by IHS under license with ISO
No reproduction or networking permitted without license from IHS
Not for Resale

Table D.1 (continued)

```
            D - DIRECT ACCESS DEVICE
            .T - SEQUENTIAL ACCESS DEVICE
            . L - PRINTER DEVICE
            .  P - PROCESSOR DEVICE
            .  .W - WRITE ONCE READ MULTIPLE DEVICE
            .  . R - READ ONLY (CD-ROM) DEVICE
            .  .  S - SCANNER DEVICE
            .  .  .O - OPTICAL MEMORY DEVICE
            .  .  . M - MEDIA CHANGER DEVICE
            .  .  .  C - COMMUNICATION DEVICE
            .  .  .  .
ASC  ASCQ   DTLPWRSOMC  DESCRIPTION
---  ----   ----------  ------------------------------------------------------
 0A   00    DTLPWRSOMC  ERROR LOG OVERFLOW
 0B   00
 0C   00     T    S     WRITE ERROR
 0C   01    D   W  O    WRITE ERROR RECOVERED WITH AUTO REALLOCATION
 0C   02    D   W  O    WRITE ERROR - AUTO REALLOCATION FAILED
 0D   00
 0E   00
 0F   00
 10   00    D   W  O    ID CRC OR ECC ERROR
 11   00    DT  WRSO    UNRECOVERED READ ERROR
 11   01    DT  W SO    READ RETRIES EXHAUSTED
 11   02    DT  W SO    ERROR TOO LONG TO CORRECT
 11   03    DT  W SO    MULTIPLE READ ERRORS
 11   04    D   W  O    UNRECOVERED READ ERROR - AUTO REALLOCATE FAILED
 11   05        WR O    L-EC UNCORRECTABLE ERROR
 11   06        WR O    CIRC UNRECOVERED ERROR
 11   07        W  O    DATA RESYNCHRONIZATION ERROR
 11   08     T          INCOMPLETE BLOCK READ
 11   09     T          NO GAP FOUND
 11   0A    DT     O    MISCORRECTED ERROR
 11   0B    D   W  O    UNRECOVERED READ ERROR - RECOMMEND REASSIGNMENT
 11   0C    D   W  O    UNRECOVERED READ ERROR - RECOMMEND REWRITE THE DATA
 12   00    D   W  O    ADDRESS MARK NOT FOUND FOR ID FIELD
 13   00    D   W  O    ADDRESS MARK NOT FOUND FOR DATA FIELD
 14   00    DTL WRSO    RECORDED ENTITY NOT FOUND
 14   01    DT  WR O    RECORD NOT FOUND
 14   02     T          FILEMARK OR SETMARK NOT FOUND
 14   03     T          END-OF-DATA NOT FOUND
 14   04     T          BLOCK SEQUENCE ERROR
 15   00    DTL WRSOM   RANDOM POSITIONING ERROR
 15   01    DTL WRSOM   MECHANICAL POSITIONING ERROR
 15   02    DT  WR O    POSITIONING ERROR DETECTED BY READ OF MEDIUM
 16   00    DW     O    DATA SYNCHRONIZATION MARK ERROR
 17   00    DT  WRSO    RECOVERED DATA WITH NO ERROR CORRECTION APPLIED
 17   01    DT  WRSO    RECOVERED DATA WITH RETRIES
 17   02    DT  WR O    RECOVERED DATA WITH POSITIVE HEAD OFFSET
 17   03    DT  WR O    RECOVERED DATA WITH NEGATIVE HEAD OFFSET
 17   04        WR O    RECOVERED DATA WITH RETRIES AND/OR CIRC APPLIED
 17   05    D   WR O    RECOVERED DATA USING PREVIOUS SECTOR ID
 17   06    D   W  O    RECOVERED DATA WITHOUT ECC - DATA AUTO-REALLOCATED
 17   07    D   W  O    RECOVERED DATA WITHOUT ECC - RECOMMEND REASSIGNMENT
 17   08    D   W  O    RECOVERED DATA WITHOUT ECC - RECOMMEND REWRITE
 18   00    DT  WR O    RECOVERED DATA WITH ERROR CORRECTION APPLIED
 18   01    D   WR O    RECOVERED DATA WITH ERROR CORRECTION & RETRIES APPLIED
 18   02    D   WR O    RECOVERED DATA - DATA AUTO-REALLOCATED
 18   03        R       RECOVERED DATA WITH CIRC
 18   04        R       RECOVERED DATA WITH LEC
 18   05    D   WR O    RECOVERED DATA - RECOMMEND REASSIGNMENT
 18   06    D   WR O    RECOVERED DATA - RECOMMEND REWRITE
```


Copyright International Organization for Standardization
Provided by IHS under license with ISO
No reproduction or networking permitted without license from IHS Not for Resale

Table D.1 (continued)

```
           D - DIRECT ACCESS DEVICE
           .T - SEQUENTIAL ACCESS DEVICE
           . L - PRINTER DEVICE
           .  P - PROCESSOR DEVICE
           .  .W - WRITE ONCE READ MULTIPLE DEVICE
           .  . R - READ ONLY (CD-ROM) DEVICE
           .  .  S - SCANNER DEVICE
           .  .  .O - OPTICAL MEMORY DEVICE
           .  .  . M - MEDIA CHANGER DEVICE
           .  .  .  C - COMMUNICATION DEVICE
           .  .  .  .
ASC  ASCQ  DTLPWRSOMC  DESCRIPTION
---  ----  ---------  ------------------------------------------------------
 19   00   D       O  DEFECT LIST ERROR
 19   01   D       O  DEFECT LIST NOT AVAILABLE
 19   02   D       O  DEFECT LIST ERROR IN PRIMARY LIST
 19   03   D       O  DEFECT LIST ERROR IN GROWN LIST
 1A   00   DTLPWRSOMC  PARAMETER LIST LENGTH ERROR
 1B   00   DTLPWRSOMC  SYNCHRONOUS DATA TRANSFER ERROR
 1C   00   D       O  DEFECT LIST NOT FOUND
 1C   01   D       O  PRIMARY DEFECT LIST NOT FOUND
 1C   02   D       O  GROWN DEFECT LIST NOT FOUND
 1D   00   D   W   O  MISCOMPARE DURING VERIFY OPERATION
 1E   00   D   W   O  RECOVERED ID WITH ECC
 1F   00
 20   00   DTLPWRSOMC  INVALID COMMAND OPERATION CODE
 21   00   DT  WR OM   LOGICAL BLOCK ADDRESS OUT OF RANGE
 21   01           M   INVALID ELEMENT ADDRESS
 22   00   D           ILLEGAL FUNCTION (SHOULD USE 20 00, 24 00, OR 26 00)
 23   00
 24   00   DTLPWRSOMC  INVALID FIELD IN CDB
 25   00   DTLPWRSOMC  LOGICAL UNIT NOT SUPPORTED
 26   00   DTLPWRSOMC  INVALID FIELD IN PARAMETER LIST
 26   01   DTLPWRSOMC  PARAMETER NOT SUPPORTED
 26   02   DTLPWRSOMC  PARAMETER VALUE INVALID
 26   03   DTLPWRSOMC  THRESHOLD PARAMETERS NOT SUPPORTED
 27   00   DT  W   O   WRITE PROTECTED
 28   00   DTLPWRSOMC  NOT READY TO READY TRANSITION(MEDIUM MAY HAVE CHANGED)
 28   01           M   IMPORT OR EXPORT ELEMENT ACCESSED
 29   00   DTLPWRSOMC  POWER ON, RESET, OR BUS DEVICE RESET OCCURRED
 2A   00   DTL WRSOMC  PARAMETERS CHANGED
 2A   01   DTL WRSOMC  MODE PARAMETERS CHANGED
 2A   02   DTL WRSOMC  LOG PARAMETERS CHANGED
 2B   00   DTLPWRSO C  COPY CANNOT EXECUTE SINCE HOST CANNOT DISCONNECT
 2C   00   DTLPWRSOMC  COMMAND SEQUENCE ERROR
 2C   01         S     TOO MANY WINDOWS SPECIFIED
 2C   02         S     INVALID COMBINATION OF WINDOWS SPECIFIED
 2D   00    T          OVERWRITE ERROR ON UPDATE IN PLACE
 2E   00
 2F   00   DTLPWRSOMC  COMMANDS CLEARED BY ANOTHER INITIATOR
 30   00   DT  WR OM   INCOMPATIBLE MEDIUM INSTALLED
 30   01   DT  WR O    CANNOT READ MEDIUM - UNKNOWN FORMAT
 30   02   DT  WR O    CANNOT READ MEDIUM - INCOMPATIBLE FORMAT
 30   03   DT          CLEANING CARTRIDGE INSTALLED
 31   00   DT  W   O   MEDIUM FORMAT CORRUPTED
 31   01   D L     O   FORMAT COMMAND FAILED
 32   00   D   W   O   NO DEFECT SPARE LOCATION AVAILABLE
 32   01   D   W   O   DEFECT LIST UPDATE FAILURE
 33   00    T          TAPE LENGTH ERROR
 34   00
 35   00
 36   00     L         RIBBON, INK, OR TONER FAILURE
```


Copyright International Organization for Standardization
Provided by IHS under license with ISO
No reproduction or networking permitted without license from IHS Not for Resale

Table D.1 (continued)

```
           D - DIRECT ACCESS DEVICE
           .T - SEQUENTIAL ACCESS DEVICE
           . L - PRINTER DEVICE
           .  P - PROCESSOR DEVICE
           .  .W - WRITE ONCE READ MULTIPLE DEVICE
           .  . R - READ ONLY (CD-ROM) DEVICE
           .  .  S - SCANNER DEVICE
           .  .  .O - OPTICAL MEMORY DEVICE
           .  .  . M - MEDIA CHANGER DEVICE
           .  .  .  C - COMMUNICATION DEVICE
           .  .  .  .
ASC  ASCQ  DTLPWRSOMC  DESCRIPTION
---  ----  ---------  -----------------------------------------------------
 37   00   DTL WRSOMC  ROUNDED PARAMETER
 38   00
 39   00   DTL WRSOMC  SAVING PARAMETERS NOT SUPPORTED
 3A   00   DTL WRSOM   MEDIUM NOT PRESENT
 3B   00    TL         SEQUENTIAL POSITIONING ERROR
 3B   01    T          TAPE POSITION ERROR AT BEGINNING-OF-MEDIUM
 3B   02    T          TAPE POSITION ERROR AT END-OF-MEDIUM
 3B   03     L         TAPE OR ELECTRONIC VERTICAL FORMS UNIT NOT READY
 3B   04     L         SLEW FAILURE
 3B   05     L         PAPER JAM
 3B   06     L         FAILED TO SENSE TOP-OF-FORM
 3B   07     L         FAILED TO SENSE BOTTOM-OF-FORM
 3B   08    T          REPOSITION ERROR
 3B   09         S     READ PAST END OF MEDIUM
 3B   0A         S     READ PAST BEGINNING OF MEDIUM
 3B   0B         S     POSITION PAST END OF MEDIUM
 3B   0C         S     POSITION PAST BEGINNING OF MEDIUM
 3B   0D           M   MEDIUM DESTINATION ELEMENT FULL
 3B   0E           M   MEDIUM SOURCE ELEMENT EMPTY
 3C   00
 3D   00   DTLPWRSOMC  INVALID BITS IN IDENTIFY MESSAGE
 3E   00   DTLPWRSOMC  LOGICAL UNIT HAS NOT SELF-CONFIGURED YET
 3F   00   DTLPWRSOMC  TARGET OPERATING CONDITIONS HAVE CHANGED
 3F   01   DTLPWRSOMC  MICROCODE HAS BEEN CHANGED
 3F   02   DTLPWRSOMC  CHANGED OPERATING DEFINITION
 3F   03   DTLPWRSOMC  INQUIRY DATA HAS CHANGED
 40   00   D           RAM FAILURE (SHOULD USE 40 NN)
 40   NN   DTLPWRSOMC  DIAGNOSTIC FAILURE ON COMPONENT NN (80H-FFH)
 41   00   D           DATA PATH FAILURE (SHOULD USE 40 NN)
 42   00   D           POWER-ON OR SELF-TEST FAILURE (SHOULD USE 40 NN)
 43   00   DTLPWRSOMC  MESSAGE ERROR
 44   00   DTLPWRSOMC  INTERNAL TARGET FAILURE
 45   00   DTLPWRSOMC  SELECT OR RESELECT FAILURE
 46   00   DTLPWRSOMC  UNSUCCESSFUL SOFT RESET
 47   00   DTLPWRSOMC  SCSI PARITY ERROR
 48   00   DTLPWRSOMC  INITIATOR DETECTED ERROR MESSAGE RECEIVED
 49   00   DTLPWRSOMC  INVALID MESSAGE ERROR
 4A   00   DTLPWRSOMC  COMMAND PHASE ERROR
 4B   00   DTLPWRSOMC  DATA PHASE ERROR
 4C   00   DTLPWRSOMC  LOGICAL UNIT FAILED SELF-CONFIGURATION
 4D   00
 4E   00   DTLPWRSOMC  OVERLAPPED COMMANDS ATTEMPTED
 4F   00
 50   00    T          WRITE APPEND ERROR
 50   01    T          WRITE APPEND POSITION ERROR
 50   02    T          POSITION ERROR RELATED TO TIMING
 51   00    T     O    ERASE FAILURE
 52   00    T          CARTRIDGE FAULT
```


Copyright International Organization for Standardization
Provided by IHS under license with ISO
No reproduction or networking permitted without license from IHS
Not for Resale

Table D.1 (continued)

```
            D - DIRECT ACCESS DEVICE
            .T - SEQUENTIAL ACCESS DEVICE
            . L - PRINTER DEVICE
            .  P - PROCESSOR DEVICE
            .  .W - WRITE ONCE READ MULTIPLE DEVICE
            .  . R - READ ONLY (CD-ROM) DEVICE
            .  .  S - SCANNER DEVICE
            .  .  .O - OPTICAL MEMORY DEVICE
            .  .  . M - MEDIA CHANGER DEVICE
            .  .  .  C - COMMUNICATION DEVICE
            .  .  .  .
ASC  ASCQ   DTLPWRSOMC  DESCRIPTION
---  ----   ----------  ------------------------------------------------------
 53   00    DTL WRSOM   MEDIA LOAD OR EJECT FAILED
 53   01     T          UNLOAD TAPE FAILURE
 53   02    DT  WR OM   MEDIUM REMOVAL PREVENTED
 54   00       P        SCSI TO HOST SYSTEM INTERFACE FAILURE
 55   00       P        SYSTEM RESOURCE FAILURE
 56   00
 57   00         R      UNABLE TO RECOVER TABLE-OF-CONTENTS
 58   00      O         GENERATION DOES NOT EXIST
 59   00      O         UPDATED BLOCK READ
 5A   00    DTLPWRSOM   OPERATOR REQUEST OR STATE CHANGE INPUT (UNSPECIFIED)
 5A   01    DT  WR OM   OPERATOR MEDIUM REMOVAL REQUEST
 5A   02    DT  W  O    OPERATOR SELECTED WRITE PROTECT
 5A   03    DT  W  O    OPERATOR SELECTED WRITE PERMIT
 5B   00    DTLPWRSOM   LOG EXCEPTION
 5B   01    DTLPWRSOM   THRESHOLD CONDITION MET
 5B   02    DTLPWRSOM   LOG COUNTER AT MAXIMUM
 5B   03    DTLPWRSOM   LOG LIST CODES EXHAUSTED
 5C   00    D   O       RPL STATUS CHANGE
 5C   01    D   O       SPINDLES SYNCHRONIZED
 5C   02    D   O       SPINDLES NOT SYNCHRONIZED
 5D   00
 5E   00
 5F   00
 60   00          S     LAMP FAILURE
 61   00          S     VIDEO ACQUISITION ERROR
 61   01          S     UNABLE TO ACQUIRE VIDEO
 61   02          S     OUT OF FOCUS
 62   00          S     SCAN HEAD POSITIONING ERROR
 63   00        R       END OF USER AREA ENCOUNTERED ON THIS TRACK
 64   00        R       ILLEGAL MODE FOR THIS TRACK
 65   00
 66   00
 67   00
 68   00
 69   00
 6A   00
 6B   00
 6C   00
 6D   00
 6E   00
 6F   00
```


Copyright International Organization for Standardization
Provided by IHS under license with ISO
No reproduction or networking permitted without license from IHS Not for Resale

Table D.1 (concluded)

```
           D - DIRECT ACCESS DEVICE
           .T - SEQUENTIAL ACCESS DEVICE
           . L - PRINTER DEVICE
           .  P - PROCESSOR DEVICE
           .  .W - WRITE ONCE READ MULTIPLE DEVICE
           .  . R - READ ONLY (CD-ROM) DEVICE
           .  .  S - SCANNER DEVICE
           .  .  .O - OPTICAL MEMORY DEVICE
           .  .  . M - MEDIA CHANGER DEVICE
           .  .  .  C - COMMUNICATION DEVICE
           .  .  .  .
ASC ASCQ   DTLPWRSOMC  DESCRIPTION
--- ----   ----------  -----------

 70  00
 71  00
 72  00
 73  00
 74  00
 75  00
 76  00
 77  00
 78  00
 79  00
 7A  00
 7B  00
 7C  00
 7D  00
 7E  00
 7F  00

 80  xxh \
  THROUGH >  Vendor-specific.
 FF  xxh /

 xxh 80 \
 THROUGH >  Vendor-specific QUALIFICATION OF STANDARD ASC.
 xxh FF /
              ALL CODES NOT SHOWN OR BLANK ARE RESERVED.
```


Copyright International Organization for Standardization
Provided by IHS under license with ISO
No reproduction or networking permitted without license from IHS Not for Resale

Table D.2 is a numerical order listing of the command operation codes.

Table D.2 - SCSI-2 Operation Codes

```
          D - DIRECT ACCESS DEVICE                              Device column key
          .T - SEQUENTIAL ACCESS DEVICE                         M = Mandatory
          . L - PRINTER DEVICE                                  O = Optional
          .  P - PROCESSOR DEVICE                               V = Vendor-specific
          .  .W - WRITE ONCE READ MULTIPLE DEVICE               R = Reserved
          .  . R - READ ONLY (CD-ROM) DEVICE
          .  .  S - SCANNER DEVICE
          .  .  .O - OPTICAL MEMORY DEVICE
          .  .  . M - MEDIA CHANGER DEVICE
          .  .  .  C - COMMUNICATION DEVICE
          .  .  .  .
        OP DTLPWRSOMC Description
        ---------------------------------------------------------------------
        00 MMMMMMMMMM TEST UNIT READY
        01  M         REWIND
        01 O V OO OO  REZERO UNIT
        02 VVVVVV
        03 MMMMMMMMMM REQUEST SENSE
        04   O        FORMAT
        04 M      O   FORMAT UNIT
        05 VMVVVV     READ BLOCK LIMITS
        06 VVVVVV
        07         O  INITIALIZE ELEMENT STATUS
        07 OVV O  O   REASSIGN BLOCKS
        08          M GET MESSAGE(06)
        08  M         READ
        08 O V OO O   READ(06)
        08    O       RECEIVE
        09 VVVVVV
        0A   M        PRINT
        0A          M SEND MESSAGE(06)
        0A    M       SEND(06)
        0A  M         WRITE
        0A O   O  O   WRITE(06)
        0B O   OO O   SEEK(06)
        0B   O        SLEW AND PRINT
        0C VVVVVV  V
        0D VVVVVV
        0E VVVVVV
        0F VOVVVV     READ REVERSE
        10   O        SYNCHRONIZE BUFFER
        10 VM VVV     WRITE FILEMARKS
        11 VMVVVV     SPACE
        12 MMMMMMMMMM INQUIRY
        13 VOVVVV     VERIFY(06)
        14 VOOVVV     RECOVER BUFFERED DATA
        15 OMO OOOOOO MODE SELECT(06)
        16 M   MM MO  RESERVE
        16  MM   M    RESERVE UNIT
        17 M   MM MO  RELEASE
        17  MM   M    RELEASE UNIT
        18 OOOOOOOO   COPY
        19 VMVVVV     ERASE
        1A OMO OOOOOO MODE SENSE(06)
        1B  O         LOAD UNLOAD
        1B        O   SCAN
        1B   O        STOP PRINT
        1B O   OO O   START STOP UNIT
```


Copyright International Organization for Standardization
Provided by IHS under license with ISO
No reproduction or networking permitted without license from IHS Not for Resale

Table D.2 (continued)

```
          D - DIRECT ACCESS DEVICE                                  Device column key
          .T - SEQUENTIAL ACCESS DEVICE                             M = Mandatory
          . L - PRINTER DEVICE                                      O = Optional
          .  P - PROCESSOR DEVICE                                   V = Vendor-specific
          .  .W - WRITE ONCE READ MULTIPLE DEVICE                   R = Reserved
          .  . R - READ ONLY (CD-ROM) DEVICE
          .  .  S - SCANNER DEVICE
          .  .  .O - OPTICAL MEMORY DEVICE
          .  .  . M - MEDIA CHANGER DEVICE
          .  .  .  C - COMMUNICATION DEVICE
          .  .  .  .
        OP DTLPWRSOMC Description
        ---+----------+-----------------------------------------------------------
        1C OOOOOOOOOO RECEIVE DIAGNOSTIC RESULTS
        1D MMMMMMMMMM SEND DIAGNOSTIC
        1E OO  OO OO  PREVENT ALLOW MEDIUM REMOVAL
        1F
        20 V   VV V
        21 V   VV V
        22 V   VV V
        23 V   VV V
        24 V   VVM    SET WINDOW
        25       O    GET WINDOW
        25 M   M  M   READ CAPACITY
        25      M     READ CD-ROM CAPACITY
        26 V   VV
        27 V   VV
        28           O GET MESSAGE(10)
        28 M   MMMM   READ(10)
        29 V   VV O   READ GENERATION
        2A           O SEND MESSAGE(10)
        2A       O    SEND(10)
        2A O   M  M   WRITE(10)
        2B  O         LOCATE
        2B          O POSITION TO ELEMENT
        2B O   OO O   SEEK(10)
        2C V       O  ERASE(10)
        2D V       O  READ UPDATED BLOCK
        2E O   O   O  WRITE AND VERIFY(10)
        2F O   OO O   VERIFY(10)
        30 O   OO O   SEARCH DATA HIGH(10)
        31       O    OBJECT POSITION
        31 O   OO O   SEARCH DATA EQUAL(10)
        32 O   OO O   SEARCH DATA LOW(10)
        33 O   OO O   SET LIMITS(10)
        34       O    GET DATA BUFFER STATUS
        34 O   OO O   PRE-FETCH
        34  O         READ POSITION
        35 O   OO O   SYNCHRONIZE CACHE
        36 O   OO O   LOCK UNLOCK CACHE
        37 O       O  READ DEFECT DATA(10)
        38     O   O  MEDIUM SCAN
        39 OOOOOOOO   COMPARE
        3A OOOOOOOO   COPY AND VERIFY
        3B OOOOOOOOOO WRITE BUFFER
        3C OOOOOOOOOO READ BUFFER
        3D         O  UPDATE BLOCK
        3E O   OO O   READ LONG
        3F O   O   O  WRITE LONG
```


--`,,```,,,,````-`-`,,`,,`,`,,`---

Copyright International Organization for Standardization
Provided by IHS under license with ISO
No reproduction or networking permitted without license from IHS Not for Resale

Table D.2 (continued)

```
          D - DIRECT ACCESS DEVICE                                  Device column key
          .T - SEQUENTIAL ACCESS DEVICE                             M = Mandatory
          . L - PRINTER DEVICE                                      O = Optional
          .  P - PROCESSOR DEVICE                                   V = Vendor-specific
          .  .W - WRITE ONCE READ MULTIPLE DEVICE                   R = Reserved
          .  . R - READ ONLY (CD-ROM) DEVICE
          .  .  S - SCANNER DEVICE
          .  .  .O - OPTICAL MEMORY DEVICE
          .  .  . M - MEDIA CHANGER DEVICE
          .  .  .  C - COMMUNICATION DEVICE
          .  .  .  .
        OP DTLPWRSOMC Description
        ---+----------+-----------------------------------------------------------
        40 0000000000 CHANGE DEFINITION
        41 O          WRITE SAME
        42      O     READ SUB-CHANNEL
        43      O     READ TOC
        44      O     READ HEADER
        45      O     PLAY AUDIO(10)
        46
        47      O     PLAY AUDIO MSF
        48      O     PLAY AUDIO TRACK INDEX
        49      O     PLAY TRACK RELATIVE(10)
        4A
        4B      O     PAUSE RESUME
        4C 0000000000 LOG SELECT
        4D 0000000000 LOG SENSE
        4E
        4F
        50
        51
        52
        53
        54
        55 OOO OOOOOO MODE SELECT(10)
        56
        57
        58
        59
        5A OOO OOOOOO MODE SENSE(10)
        5B
        5C
        5D
        5E
        5F
```


Copyright International Organization for Standardization
Provided by IHS under license with ISO
No reproduction or networking permitted without license from IHS Not for Resale

Table D.2 (concluded)

```
          D - DIRECT ACCESS DEVICE                                Device column key
          .T - SEQUENTIAL ACCESS DEVICE                           M = Mandatory
          . L - PRINTER DEVICE                                    O = Optional
          .  P - PROCESSOR DEVICE                                 V = Vendor-specific
          .  .W - WRITE ONCE READ MULTIPLE DEVICE                 R = Reserved
          .  . R - READ ONLY (CD-ROM) DEVICE
          .  .  S - SCANNER DEVICE
          .  .  .O - OPTICAL MEMORY DEVICE
          .  .  . M - MEDIA CHANGER DEVICE
          .  .  .  C - COMMUNICATION DEVICE
          .  .  .  .
        OP DTLPWRSOMC Description
        ---------------------------------------------------------------------
        A0
        A1
        A2
        A3
        A4
        A5          M  MOVE MEDIUM
        A5       O     PLAY AUDIO(12)
        A6          O  EXCHANGE MEDIUM
        A7
        A8           O GET MESSAGE(12)
        A8      OO O   READ(12)
        A9       O     PLAY TRACK RELATIVE(12)
        AA           O SEND MESSAGE(12)
        AA      O  O   WRITE(12)
        AB
        AC         O   ERASE(12)
        AD
        AE      O  O   WRITE AND VERIFY(12)
        AF      OO O   VERIFY(12)
        B0      OO O   SEARCH DATA HIGH(12)
        B1      OO O   SEARCH DATA EQUAL(12)
        B2      OO O   SEARCH DATA LOW(12)
        B3      OO O   SET LIMITS(12)
        B4
        B5           O  REQUEST VOLUME ELEMENT ADDRESS
        B6           O  SEND VOLUME TAG
        B7          O   READ DEFECT DATA(12)
        B8           O  READ ELEMENT STATUS
        B9
        BA
        BB
        BC
        BD
        BE
        BF
```


Copyright International Organization for Standardization
Provided by IHS under license with ISO
No reproduction or networking permitted without license from IHS Not for Resale

Annex E
(informative)

Vendor identification

This annex contains the list of SCSI-2 vendor identifications (see table E.1) as of the date of this document. The purpose of this list is to help avoid redundant usage of vendor identifications. Technical Committee X3T10 of Accredited Standards Committee X3 maintains an informal list of vendor identifications currently in use. Please contact the chairman of X3T10 prior to using a new vendor identification to avoid conflicts.

Table E.1 - Vendor identification list

ID	Organization
3M	3M Company
ACL	Automated Cartridge Librarys, Inc.
ADAPTEC	Adaptec
ADSI	Adaptive Data Systems, Inc. (a Western Digital subsidiary)
AMCODYNE	Amcodyne
ANAMATIC	Anamartic Limited (England)
ANCOT	ANCOT Corp.
ANRITSU	Anritsu Corporation
APPLE	Apple Computer, Inc.
ARCHIVE	Archive
ASACA	ASACA Corporation
ASPEN	Aspen Peripherals
AST	AST Research
ASTK	Alcatel STK A/S
AT&T	AT&T
ATARI	Atari Corporation
ATTO	ATTO Technology Inc.
ATX	Alphatronix
AVR	Advanced Vision Research
BALLARD	Ballard Synergy Corp.
BERGSWD	Berg Software Design
BEZIER	Bezier Systems, Inc.
BULL	Bull Peripherals Corp.
CalComp	CalComp, A Lockheed Company
CALIPER	Caliper (California Peripheral Corp.)
CAST	Advanced Storage Tech
CDC	Control Data or MPI
CDP	Columbia Data Products
CHEROKEE	Cherokee Data Systems
CHINON	Chinon
CIE&YED	YE Data, C.Itoh Electric Corp.
CIPHER	Cipher Data Products

Copyright International Organization for Standardization
Provided by IHS under license with ISO
No reproduction or networking permitted without license from IHS Not for Resale

Table E.1 - (continued)

ID	Organization
Ciprico	Ciprico, Inc.
CMD	CMD Technology
CNGR SFW	Congruent Software, Inc.
COGITO	Cogito
COMPORT	Comport Corp.
COMPSIG	Computer Signal Corporation
CONNER	Conner Peripherals
CPU TECH	CPU Technology, Inc
CREO	CREO Products Inc.
CROSFLD	Crosfield Electronics
CSM, INC	Computer SM, Inc.
CYGNET	Cygnet Systems, Inc.
DATABOOK	Databook, Inc.
DATACOPY	Datacopy Corp.
DATAPT	Datapoint Corp.
DEC	Digital Equipment
DELPHI	Delphi Data Div. of Sparks Industries, Inc.
DENON	Denon/Nippon Columbia
DEST	DEST Corp.
DGC	Data General Corp.
DIGIDATA	Digi-Data Corporation
DILOG	Distributed Logic Corp.
DISC	Document Imaging Systems Corp.
DPT	Distributed Processing Technology
DSM	Deterner Steuerungs- und Maschinenbau GmbH & Co.
DTC QUME	Data Technology Qume
DXIMAGIN	DX Imaging
EMULEX	Emulex
EPSON	Epson
EXABYTE	Exabyte Corp.
FILENET	FileNet Corp.
FUJI	Fuji Electric Co., Ltd. (Japan)
FUJITSU	Fujitsu
FUTURED	Future Domain Corp.
Gen_Dyn	General Dynamics
GIGATAPE	GIGATAPE GmbH
GIGATRND	GigaTrend Incorporated
Goidelic	Goidelic Precision, Inc.
GOULD	Gould
HITACHI	Hitachi America Ltd or Nissei Sangyo America Ltd
HONEYWEL	Honeywell Inc.
HP	Hewlett Packard
IBM	International Business Machines
ICL	ICL
IDE	International Data Engineering, Inc.
IGR	Intergraph Corp.
IMPLTD	Integrated Micro Products Ltd.
IMPRIMIS	Imprimis Technology Inc.
INSITE	Insite Peripherals
IOC	I/O Concepts, Inc.
IOMEGA	Iomega

Copyright International Organization for Standardization
Provided by IHS under license with ISO
No reproduction or networking permitted without license from IHS Not for Resale

Table E.1 - (continued)

ID	Organization
ISi	Information Storage inc.
ITC	International Tapetronics Corporation
JVC	JVC Information Products Co.
KENNEDY	Kennedy Company
KODAK	Eastman Kodak
KONAN	Konan
KONICA	Konica Japan
LAPINE	Lapine Technology
LASERDRV	LaserDrive Limited
LASERGR	Lasergraphics, Inc.
LMS	Laser Magnetic Storage International Company
MATSHITA	Matsushita
MAXTOR	Maxtor Corp.
MaxOptix	Maxoptix Corp.
MDI	Micro Design International, Inc.
MELA	Mitsubishi Electronics America
MELCO	Mitsubishi Electric (Japan)
MEMREL	Memrel Corporation
MEMTECH	MemTech Technology
MICROBTX	Microbotics Inc.
MICROP	Micropolis
MICROTEK	Microtek Storage Corp
MINSCRIB	Miniscribe
MITSUMI	MITSUMI Electric Co., Ltd.
MOTOROLA	Motorola
MST	Morning Star Technologies, Inc.
NAI	North Atlantic Industries
NatInst	National Instruments
NatSemi	National Semiconductor Corp.
NCL	NCL America
NCR	NCR Corporation
NEC	NEC
NISCA	NISCA Inc.
NKK	NKK Corp.
NT	Northern Telecom
OCE	Oce Graphics
OMI	Optical Media International
OMNIS	OMNIS Company (FRANCE)
OPTIMEM	Cipher/Optimem
OPTOTECH	Optotech
ORCA	Orca Technology
OSI	Optical Storage International
OTL	OTL Engineering
PASCOsci	Pasco Scientific
PERTEC	Pertec Peripherals Corporation
PFTI	Performance Technology Inc.
PIONEER	Pioneer Electronic Corp.
PRAIRIE	PrairieTek
PRESOFT	PreSoft Architects
PRESTON	Preston Scientific
PRIAM	Priam
PRIMAGFX	Primagraphics Ltd

Copyright International Organization for Standardization
Provided by IHS under license with ISO
No reproduction or networking permitted without license from IHS Not for Resale

Table E.1 - (concluded)

ID	Organization
PTI	Peripheral Technology Inc.
QUALSTAR	Qualstar
QUANTEL	Quantel Ltd.
QUANTUM	Quantum Corp.
R-BYTE	R-Byte Inc.
RACALREC	Racal Recorders
RADSTONE	Radstone Technology
RGI	Raster Graphics, Inc.
RICOH	Ricoh
RODIME	Rodime
RTI	Reference Technology
SANKYO	Sankyo Seiki
SANYO	SANYO Electric Co., Ltd.
SCREEN	Dainippon Screen Mfg. Co., Ltd.
SEAGATE	Seagate
SEQUOIA	Sequoia Advanced Technologies, Inc.
Shinko	Shinko Electric Co., Ltd.
SIEMENS	Siemens
SII	Seiko Instruments Inc.
SMS	Scientific Micro Systems/OMTI
SNYSIDE	Sunnyside Computing Inc.
SONIC	Sonic Solutions
SONY	Sony Corporation Japan
SPECTRA	Spectra Logic, a Division of Western Automation Labs, Inc.
SPERRY	Sperry (now Unisys Corp.)
STK	Storage Technology Corporation
SUMITOMO	Sumitomo Electric Industries, Ltd.
SUN	Sun Microsystems, Inc.
SyQuest	SyQuest Technology, Inc.
SYSGEN	Sysgen
T-MITTON	Transmitton England
TALARIS	Talaris Systems, Inc.
TALLGRAS	Tallgrass Technologies
TANDBERG	Tandberg Data A/S
TANDON	Tandon
TEAC	TEAC Japan
TECOLOTE	Techolote Designs
TEGRA	Tegra Varityper
Tek	Tektronix
TI-DSG	Texas Instruments
TOSHIBA	Toshiba Japan
ULTRA	UltraStor Corporation
UNISYS	Unisys
USDC	US Design Corp.
VERBATIM	Verbatim Corporation
VRC	Vermont Research Corp.
WangDAT	WangDAT
WANGTEK	Wangtek
WDIGTL	Western Digital
WEARNES	Wearnes Technology Corporation
XEBEC	Xebec Corporation

Copyright International Organization for Standardization
Provided by IHS under license with ISO
No reproduction or networking permitted without license from IHS Not for Resale

Index

3rdPty bit . . . 176, 179, 237, 238, 378, 380
ABORT . . . 3, 35, 37, 39, 41, 42, 47, 49, 50, 52-56, 61, 71, 75, 77, 78, 80, 400
ABORT TAG . . . 3, 39, 49, 52, 53, 55, 61, 71, 75, 80
absolute CD-ROM address field . . . 300, 306
access bit . . . 373-375
active format field . . . 251
active I/O process . . . 3, 49, 51
active notch field . . . 196, 204, 207
active partition field . . . 250, 251
actual retry count field . . . 116
additional length field . . . 99
additional partitions defined field . . . 253
additional sense code field . . . 114, 115, 372
additional sense code qualifier . . . 114, 115, 285, 372-375
ADDRESS MARK NOT FOUND FOR DATA FIELD . . . 121, 407
ADDRESS MARK NOT FOUND FOR ID FIELD . . . 121, 407
address to translate field . . . 192-194
ADR field . . . 284, 300, 306
advanced scan algorithm . . . 343
AEN . . . 5, 76-78, 83, 87, 117, 118, 140-142, 274
AENC bit . . . 77, 99
AFC . . . 266, 267
allocation length . 64, 68-70, 87, 96, 99, 103, 104, 106, 109-113, 115, 145-149, 171, 172, 273, 296, 297, 305, 323, 325, 345, 346, 368, 369, 371, 376, 377, 393, 394
allocation length field . . . 70, 103
alternate sector . . . 193
alternate sectors per zone field . . . 204
alternate track . . . 194
alternate tracks per logical unit field . . . 204
alternate tracks per zone . . . 202-204
alternate volume tag . . . 362, 371-375, 382
alternate volume tag information field . . . 371
ALTSEC bit . . . 193
ALTTRK bit . . . 194
APRVal . . . 309, 310
arbitration delay . . . xx, 34, 35, 40, 399
ARBITRATION phase . . . 32, 33, 35, 36, 39-41, 56, 81, 399
ARRE bit . . . 208
ASA . . . 342, 343
ASC . . . 115, 121-124, 126, 406-411
ASCQ . . . 115, 121-124, 126, 406-411
assertion period . . . 34, 35, 37, 43, 44, 403
asynchronous event notification . . . xx, 5, 26, 53, 58, 76-78, 99, 117, 136, 140-142, 223, 226, 274
attention condition . . . 32, 46-49, 53, 56, 60, 75, 77, 80, 83, 87, 96, 102, 104, 119, 129, 133, 139, 141, 176, 215, 237, 248
AUDIO PLAY OPERATION IN PROGRESS . . . 121, 299, 406
AUDIO PLAY OPERATION PAUSED . . . 121, 299, 406
AUDIO PLAY OPERATION STOPPED DUE TO ERROR . . . 121, 299, 406
AUDIO PLAY OPERATION SUCCESSFULLY COMPLETED . . . 121, 299, 406
audio playback rate valid . . . 310
audio status field . . . 299
auto bit . . . 321, 327
autofd . . . 264, 265
automatic line feed . . . 265

Copyright International Organization for Standardization
Provided by IHS under license with ISO
No reproduction or networking permitted without license from IHS
Not for Resale

automatic read reallocation 208
automatic velocity control 251
automatic write reallocation 208
available data buffer field 324
AVC 250, 251
AVolTag 371-373
AWG 5, 8, 403
AWRE bit 189, 208, 216
basic measurement unit field 336
baud rate field 270
beginning of partition 234
BEGINNING-OF-PARTITION/MEDIUM DETECTED 121
BIS 233, 250, 251
bit ordering field 328
bit pointer field 116
bit pointer valid 116
bits per character field 270
bits per pixel field 328
BLANK CHECK 94, 120, 231, 241, 277, 286, 287, 289, 308, 339, 347, 350, 356
blank verify 282, 350
BlkVfy 282, 350, 351
block address type 229, 233
block descriptor . . . 104, 105, 107, 115, 137-139, 150, 194, 195, 230, 243, 246, 247, 263, 264, 281, 307, 308, 318, 319, 331, 333, 335, 355, 356, 384, 397
block descriptor length 137, 138
block device logical block address field 92
block device number of blocks field 92
block identifiers supported 251
block length field 93, 115, 139, 230
block length in bytes 170, 230, 243
block position unknown 234
BLOCK SEQUENCE ERROR 121, 407
BOP 221-225, 233, 234
BPU 233, 234
BPV bit 116
brightness field 327
BT 229, 233
buffer capacity field 110, 111, 128
buffer empty ratio field 142
buffer full ratio field 142
buffer ID field 110, 128
buffer offset field 110, 111
Buffer Over-Run/Under-Run Page 134, 194, 246, 263, 275, 307, 334, 355, 397
buffered mode field 243, 247, 264
bus clear delay 34, 35, 39-41, 48, 399, 401
BUS DEVICE RESET . . . 3, 39, 47, 48, 52, 54-56, 62-64, 66, 71, 75, 78, 80, 83, 103, 104, 107, 123, 167, 177-179, 238, 379, 380, 408
bus free delay 34, 35, 40, 399
BUS FREE phase 3, 4, 35, 36, 39-42, 47, 48, 50, 54-57, 61, 63, 65, 66, 73, 79, 81, 399, 401
bus set delay 34, 36, 40, 399
bus settle delay 34-36, 39-42, 47, 399-401
BUSY status 78-80, 117, 271, 321, 390
BytChk bit 95, 187, 189, 350, 354
byte check 95, 187, 189, 350, 354
byte count of descriptor data available field 371
byte count of report available field 369

Copyright International Organization for Standardization
Provided by IHS under license with ISO
No reproduction or networking permitted without license from IHS Not for Resale

byte transfer length field 173, 190
C/D bit 116
cable skew delay 34-37, 43, 44, 400, 403
Caching Page 196, 309, 357
CAF 250, 251
CANNOT READ MEDIUM - INCOMPATIBLE FORMAT 121, 408
CANNOT READ MEDIUM - UNKNOWN FORMAT 121, 408
CAP 250
CARTRIDGE FAULT 121, 409
cat bit 89, 92, 94
catenate 92
cause field 134, 135
CD-ROM Audio Control Page 309
CD-ROM devices . . . . . xix, 115, 280, 282, 286-288, 295, 307, 308, 310, 312, 318, 338
CD-ROM Page 309
change active format 251
change active partition 250
CHANGE DEFINITION command 74, 86, 87, 96, 146, 153
change partition 229
CHANGED OPERATING DEFINITION 75, 121, 409
channel bit 261, 266, 267
channel volume control 311
CHECK CONDITION status . . . 3, 45, 47, 49, 57, 67, 71, 75-77, 83, 85, 88, 90-93, 95, 96, 100-105, 107, 108, 110, 111, 113, 116-118, 125, 126, 128, 130, 131, 133, 134, 136, 139, 143, 151, 154, 158, 159, 161, 162, 164, 170-173, 175, 176, 178, 179, 181, 182, 185, 186, 187, 189-192, 204, 208-211, 213, 215, 218, 225, 227-231, 235, 236, 239-245, 251, 255, 260-262, 271, 276, 285-289, 291-293, 305, 312-317, 321, 329-331, 336, 339, 343, 347, 350, 351, 354, 356, 358, 364-366, 378, 379, 380, 387, 390
CIRC UNRECOVERED ERROR 121, 407
CLEANING CARTRIDGE INSTALLED 121, 408
CLEAR QUEUE 3, 39, 52, 53, 55, 56, 71, 75, 80
clear to send 270
CmpLst bit 159-161
code field . . . 69, 90, 96, 104, 107, 108, 112, 114, 115, 130-132, 134, 139, 146, 148, 194, 195, 240, 246, 247, 263, 264, 281, 307, 308, 335, 355, 356, 368, 371, 372, 377, 381, 384, 397
command code 69, 70
COMMAND COMPLETE 3, 39, 49, 50, 52, 56, 59, 71, 73, 74, 78, 81, 87, 401
command data 116, 298
command descriptor block . . . 3, 48, 51, 64, 68-71, 73, 75, 81, 91-94, 99, 109, 113, 115, 116, 119, 128, 131, 132, 137-139, 146-148, 161, 166, 170, 176, 183, 185, 186, 205, 227-229, 239, 242, 244, 256, 295, 343, 369
COMMAND phase 39, 46, 48, 58, 71, 73, 78, 118, 121, 400, 409
COMMAND PHASE ERROR 121, 409
command queue 3, 4, 61, 64, 72, 78-81
COMMAND SEQUENCE ERROR 121, 408
COMMAND TERMINATED status 58, 64, 72, 78, 113, 117, 119
command-specific information field 91, 115, 175, 181
COMMANDS CLEARED BY ANOTHER INITIATOR 56, 80, 121, 141, 408
communications devices . . . . . 2, xix, xx, 390-392, 397, 398
COMPARE command 88, 90
complete list 160, 172
CONDITION MET status 71, 72, 166, 181, 343
connect time limit field 143
connection 3, 4, 6, 8, 26, 34, 39, 54-57, 60, 61, 75, 80, 143, 280
contingent allegiance . . . . . xx, 3, 55, 56, 58, 61, 64, 72, 75, 76, 78-80, 83, 85, 87, 112, 140, 141, 223
contrast field 327
control . xxi, 3, 6, 32, 36, 40, 42, 43, 64, 68, 69, 71, 73, 76, 79-81, 86, 88, 89, 95, 96, 101-104, 106, 107, 109, 112, 125, 126, 127, 129, 132-134, 136, 140, 143, 151, 152, 158, 159, 161, 165-169, 171, 173-175, 177, 180,

Copyright International Organization for Standardization
Provided by IHS under license with ISO
No reproduction or networking permitted without license from IHS
Not for Resale

181, 183-191, 196, 199, 208, 215, 227-230, 232, 233, 235-240, 242-244, 249, 251, 257, 259-262, 264-267, 271-276, 282, 284, 285, 288-294, 296-298, 300, 302, 303, 305, 306, 309, 311, 319, 320, 323, 325, 327, 329, 331-333, 335, 341, 342, 344, 345-354, 357, 360, 364-368, 376, 378, 379, 381, 390, 393-397, 416
control field 71, 101, 103, 106, 107, 284, 306, 319, 320
Control Mode Page 64, 76, 79, 80, 133, 134, 136, 140, 196, 249, 264, 309, 335, 357, 397
COPY ABORTED 90-93, 120
COPY AND VERIFY command 95, 114, 115, 215
COPY CANNOT EXECUTE SINCE HOST CANNOT DISCONNECT 121, 408
COPY command . . . . . xxi, 5, 26, 88-92, 94-96, 176, 179, 238, 271
COPY function code field 90
CORRCT bit 173
correct 41, 73, 78, 81, 116, 119, 121, 155, 228, 317, 406, 407
count basis field 134, 135
count field 94, 116, 209-213, 216, 240, 241, 317, 329, 330
CP 229
CTS 269, 270
current I/O process 3, 39, 55, 56, 62, 64, 72, 79
current operating definition field 147
cylinder skew factor field 204
data buffer recovery 251
data buffer status descriptor 323
data bytes per physical sector field 204
data bytes per sector field 200
data defect list 159, 171, 172, 346
DATA IN phase 46, 58, 70, 73, 110, 170, 261, 275, 295, 306, 324, 331, 347, 400, 401
DATA OUT phase . . 46, 68, 70, 77, 89, 101, 102, 105, 116, 128, 159, 160, 259-261, 274, 275, 332, 333, 343, 349, 394, 400
DATA PATH FAILURE (SHOULD USE 40 NN) 121, 409
DATA PHASE ERROR 121, 409
DATA PROTECT 119, 155, 179, 185, 225, 277, 339
data release delay 34, 36, 47
DATA SYNCHRONIZATION MARK ERROR 121, 407
data transfer disconnect control 143
data transfer element 359, 360, 364, 366, 368, 375, 385-387, 389
data type qualifier field 331
DBD bit 106
DBR 250, 251
DC bit 92-94
DCR bit 209, 255
DCRT bit 161
default operating definition field 147
defect descriptor 159, 160, 162, 163, 172, 174, 175
DEFECT LIST ERROR 121, 161, 408
DEFECT LIST ERROR IN GROWN LIST 121, 408
DEFECT LIST ERROR IN PRIMARY LIST 121, 408
defect list format field 160, 171, 172
defect list length field 162, 172, 175
DEFECT LIST NOT AVAILABLE 121, 408
DEFECT LIST NOT FOUND 121-123, 161, 171, 408
DEFECT LIST UPDATE FAILURE 121, 408
defect logical block address 174, 175
definition parameter field 86
demand read retention priority field 197
deskew delay 34-37, 43, 44, 47, 400, 403
destination count 92, 93
destination logical block address field 93

Copyright International Organization for Standardization
Provided by IHS under license with ISO
No reproduction or networking permitted without license from IHS
Not for Resale

device off-line 125
device-specific parameter 137, 246, 256, 263, 308
DevOfL bit 126
DIAGNOSTIC FAILURE ON COMPONENT NN (80H-FFH) 121, 409
diagnostic parameters 7, 70, 125, 129, 130, 192, 246, 263, 275, 307, 334, 355, 383, 396
direct-access devices . . . . xix, xx, 6, 90, 115, 135, 139, 150-152, 154, 157, 192, 194-196, 206, 214, 217, 218, 280, 338, 339
disable block descriptors 106
disable certification 161
disable correction 209, 255
disable page out 152, 169
disable pre-fetch transfer length field 198
disable primary 161
disable queuing 141
disable save 132
disable saving parameters 161
disable transfer on error 209, 255
disable update 132
DISCONNECT . . . 3, 5, 36, 39, 45, 47, 48, 50, 52, 54, 56, 57, 59, 71, 73, 74, 79, 81, 112, 117, 121, 140, 142, 143, 196, 249, 264, 271, 272, 309, 335, 357, 390, 391, 397, 399, 408
disconnect time limit field 143
Disconnect-Reconnect Page 57, 140, 142, 196, 249, 264, 309, 335, 357, 397
disconnection delay 35, 36, 56
displacement field 182, 183
download microcode 128, 129
DPO bit 152, 169
DPOFUA bit 195, 308, 356
DPRY bit 161
DQue bit 80, 141
drive step pulse width field 200
drive step rate field 200, 215
DS bit 101, 103, 132
DSP bit 161
dt 121-124, 385, 406-408, 410
DTE bit 209, 255
DU bit 132, 133
EAENP bit 141
EBC 308, 350, 356
EBP 352-354
EECA bit 141
EEG 250, 252
EER bit 208, 209, 216, 255
electronic vertical forms unit 124, 266, 267, 409
Element Address Assignment Page 386
element address field 360, 372-374, 377, 382, 386, 387
element bit 378-381
element descriptor length field 371
element descriptors 368, 369, 371, 377, 380
element status 361-363, 365, 368-371, 373, 377, 412, 415
element type code field 368, 371, 377, 381
enable blank check 308, 350, 356
enable early recovery 208, 255
enable EOD generation 252
enable extended contingent allegiance 141
enable threshold comparison 132
enable vital product data 96

Copyright International Organization for Standardization
Provided by IHS under license with ISO
No reproduction or networking permitted without license from IHS
Not for Resale

end of partition . . . 234
END OF USER AREA ENCOUNTERED ON THIS TRACK . . . 121, 286, 289, 410
END-OF-DATA DETECTED . . . 121, 406
END-OF-DATA NOT FOUND . . . 121, 407
end-of-medium . . . 114, 124, 218, 219, 221, 224, 228, 256, 262, 337, 409
END-OF-PARTITION/MEDIUM DETECTED . . . 121
end-of-tape . . . 228
ending boundary field . . . 207
ending F field . . . 290, 291
ending index field . . . 292
ending M field . . . 290, 291
ending S field . . . 290, 291
ending track field . . . 292
EOD defined field . . . 252, 256
EOM bit . . . 114, 231, 241, 242, 251, 329, 330
EOP . . . 221, 222, 224, 233, 234
EOT . . . 228, 256
EQUAL . . . 37, 43, 45, 54, 63, 65, 74, 105, 120, 133, 138, 157, 162, 163, 170, 172, 175, 181, 183, 198, 200, 207, 213-215, 232, 234, 278, 283, 287, 289, 291-293, 295, 326, 334, 336, 337, 340, 343, 344, 368, 413, 415
ERA . . . 341, 342
erase all . . . 341
erase by-pass . . . 352, 354
ERASE command . . . 222, 227, 338
ERASE FAILURE . . . 121, 409
ERASE(10) command . . . 341, 342
ERASE(12) command . . . 342
error AEN permission . . . 141
Error Counter Pages . . . 135
ERROR LOG OVERFLOW . . . 121, 407
ERROR TOO LONG TO CORRECT . . . 121, 407
ETC bit . . . 132, 133
EVFU . . . 266, 267
EVFU format start character field . . . 267
EVFU format stop character field . . . 267
EVPD bit . . . 96, 100
except . . . 27, 34, 39, 46-48, 56, 61, 72, 74, 75, 79, 88, 95, 102, 104, 107, 113, 115, 125, 129, 132, 133, 141, 144, 158, 160, 235, 236, 283, 285, 286, 306, 372-375, 405
EXCESSIVE WRITE ERRORS . . . 121, 406
EXCHANGE MEDIUM command . . . 364
exclusive access . . . 178, 179, 359, 375
ExEnab . . . 374
export enable . . . 374
extended contingent allegiance . . . xx, 3, 55, 56, 58, 61, 75, 76, 78-80, 87, 140, 141, 223
extent . . . 72, 151, 153, 158, 175-180
extent bit . . . 176-178
extent list length field . . . 178
FAILED TO SENSE BOTTOM-OF-FORM . . . 121, 409
FAILED TO SENSE TOP-OF-FORM . . . 121, 409
fast assertion period . . . 35, 37, 403
fast cable skew delay . . . 35, 37, 403
fast deskew delay . . . 35, 37, 403
fast hold time . . . 35, 37, 403
fast negation period . . . 35, 38, 403
fast synchronous transfer option . . . 37
FDP . . . 253
field pointer field . . . 116

Copyright International Organization for Standardization
Provided by IHS under license with ISO
No reproduction or networking permitted without license from IHS
Not for Resale

filemark 113, 114, 119, 121, 222, 224, 225, 231, 235, 236, 240-242, 256, 406, 407
filemark bit 114, 241
FILEMARK DETECTED 121, 406
FILEMARK OR SETMARK NOT FOUND 121, 407
filled data buffer field 324
first block location field 234
first data transfer element address field 387
first element address reported field 369
first import export element address field 387
first record offset field 182
first storage element address field 387
fixed bit 115, 225, 226, 230-232, 235-237, 242-244
fixed data partitions 253
flag bit 59, 71, 284
Flexible Disk Page 196, 199
FmtData bit 160, 161
FOCUS SERVO FAILURE 121, 406
font identification field 266
forced unit access 152
form slew options field 268
FORMAT command 121, 259, 267, 408
FORMAT COMMAND FAILED 121, 408
format data 158, 159
Format Device Page 154, 196, 202
format options valid 161
format type field 259
FORMAT UNIT command 108, 117, 151, 154, 158-161, 171, 172, 174, 179, 192, 203-205, 276
FOV bit 161
FUA bit 169
full bit 372
gap size field 227
generation address field 346, 347
GENERATION DOES NOT EXIST 121, 347, 410
GET DATA BUFFER STATUS command 323
GET MESSAGE(06) command 393
GET MESSAGE(10) command 393
GET MESSAGE(12) command 394
GET WINDOW command 321, 325, 327
GList bit 171, 172
GOOD status . 73, 77, 81, 83, 85, 108, 113, 117, 118, 125, 126, 154, 166, 169, 175, 181, 197, 223, 237, 243, 247, 262, 264, 329, 343, 378
group code 69, 70, 249, 400
grown defect list 122, 159, 161, 171, 172, 174, 408
GROWN DEFECT LIST NOT FOUND 122, 408
hard sector 204, 205
HARDWARE ERROR 116, 119, 125, 155, 175, 215, 225, 277, 286, 339
head load delay field 201
HEAD OF QUEUE TAG 52, 60, 61, 72, 80, 82
head settle delay field 200
head unload delay 199, 201
hold time 35-37, 44, 48, 403
host adapter 3, 5, 399
HSEC bit 204
i/e 385
I/O process . 3-5, 39, 40, 45, 49, 51, 52, 55-58, 60-62, 64, 71-75, 77, 79-82, 99, 113, 117, 122, 141, 215, 399, 406
I/O PROCESS TERMINATED 64, 122, 406

Copyright International Organization for Standardization
Provided by IHS under license with ISO
No reproduction or networking permitted without license from IHS
Not for Resale

I_T 4, 54, 55, 57, 58, 60, 61, 70, 73, 75, 76, 78, 79, 81, 104, 112, 113, 141, 237
I_T_L 4, 54, 55, 57, 58, 60, 61, 70, 73, 75, 76, 78, 79, 81, 104, 237
I_T_L_Q 4, 55, 58, 60, 61, 75, 79, 81
I_T_R 4, 54, 57
I_T_x 4, 55, 61, 78, 79, 112, 113, 141
I_T_x_y 4
ID CRC OR ECC ERROR 122, 407
ID Valid bit 376
IDENTIFY 4, 6, 48, 49, 52-55, 57, 58, 61, 70, 73, 75, 78, 79, 81, 84, 88, 95, 97, 118, 119, 122, 150, 155, 161, 177, 253, 254, 379, 400, 409
IDP 253
IGNORE WIDE RESIDUE 52, 58
ILI bit 330, 331
ILLEGAL FUNCTION (SHOULD USE 20 00, 24 00, OR 26 00) 122, 408
ILLEGAL MODE FOR THIS TRACK 122, 287, 289, 410
ILLEGAL REQUEST 57, 67, 71, 75, 76, 92, 93, 95, 96, 100-105, 107, 108, 110, 111, 116, 119, 126, 128, 130, 131, 133, 134, 139, 143, 154, 159, 161, 164, 170, 173, 176, 178, 179, 182, 186, 190-192, 212, 213, 225, 228, 230, 240, 242, 261, 267, 268, 277, 286, 289, 291-293, 305, 312, 329, 336, 339, 341, 351, 364-366, 378-380, 382, 385-387
image composition field 327
Immed bit 117, 161, 166, 185, 186, 227-229, 239, 242-245, 310
immediate 76, 77, 117, 161, 166, 185, 186, 223, 227-229, 239, 242, 244, 285, 288, 310
ImpExp 374, 375
Implemented Operating Definition Page 86, 87, 144-147
import enable 374
import export 359, 360, 364, 366, 368, 374, 375, 385-387, 389
import export element 359, 364, 366, 368, 374, 375, 385-387, 389
IMPORT OR EXPORT ELEMENT ACCESSED 122, 408
inactivity timer multiplier 311
INCOMPATIBLE MEDIUM INSTALLED 122, 408
INCOMPLETE BLOCK READ 122, 407
incorrect length indicator 114, 230
InEnab 374
information field 64, 90, 91, 94, 114, 115, 119, 146, 155, 173, 175, 181, 190, 210-213, 225-227, 230, 231, 235-237, 240-245, 277, 286, 339, 340, 371-375
Information Page 115, 145, 146
initial connection 3, 4, 57, 60, 75, 80
initialization pattern 159, 161-164
initialization pattern descriptor 159, 161-163
initialization pattern length field 164
INITIALIZE ELEMENT STATUS command 361, 365
INITIATE RECOVERY 3, 52, 53, 58, 61, 78, 87
INITIATOR DETECTED ERROR 45, 52, 59, 122, 409
INITIATOR DETECTED ERROR MESSAGE RECEIVED 122, 409
initiator-defined partitions 253
INQUIRY command 62, 74-77, 83-85, 87, 96, 100, 144, 146, 148, 158, 205, 338, 358
INQUIRY DATA HAS CHANGED 122, 409
interleave field 162, 204
INTERMEDIATE status 166
INTERMEDIATE-CONDITION MET status 71, 72, 166, 181, 343
INTERNAL TARGET FAILURE 122, 409
Inv1 bit 365
Inv2 bit 365
INVALID BITS IN IDENTIFY MESSAGE 57, 122, 409
INVALID COMBINATION OF WINDOWS SPECIFIED 122, 408
INVALID COMMAND OPERATION CODE 122, 408

Copyright International Organization for Standardization
Provided by IHS under license with ISO
No reproduction or networking permitted without license from IHS Not for Resale

INVALID ELEMENT ADDRESS 122, 408
INVALID FIELD IN CDB 96, 100-105, 107, 122, 126, 128, 173, 186, 190, 230, 305, 341, 351, 408
INVALID FIELD IN PARAMETER LIST . . . 92, 93, 102, 103, 105, 122, 130, 131, 133, 134, 139, 159, 161, 164, 192, 212, 312, 408
INVALID MESSAGE ERROR 122, 409
invert 181, 183, 348, 362, 366, 367, 372-375
Invert bit 181, 183, 362, 366, 367, 373
IP bit 161
IP modifier field 163, 164
L-EC UNCORRECTABLE ERROR 122, 407
LAMP FAILURE 122, 410
landing zone cylinder field 215
last block location field 234
Last n Error Events Page 134, 136, 194, 246, 263, 275, 307, 334, 355, 384, 397
latest bit 347
line slew options field 267
link bit 71, 166, 181, 189, 343
LINKED COMMAND COMPLETE 52, 59, 71, 74
LINKED COMMAND COMPLETE (WITH FLAG) 52, 59, 71, 74
list parameter 133, 136
load bit 228
load eject 185
LOAD UNLOAD command 228, 256
LOCATE command 224, 229, 234
lock 152, 153, 157, 165, 277, 283, 287, 340, 413
lock bit 165
LOCK UNLOCK CACHE command 165
LoEj bit 185
LOG COUNTER AT MAXIMUM 122, 133, 410
LOG EXCEPTION 122, 140, 410
LOG LIST CODES EXHAUSTED 122, 133, 136, 410
Log Parameters 7, 70, 101-104, 122, 126, 131, 132, 135, 194, 246, 263, 275, 307, 334, 355, 384, 396, 408
LOG PARAMETERS CHANGED 102, 122, 408
LOG SELECT command 101-103, 131, 132, 134, 137
LOG SENSE command 101, 103, 131-133, 136
logical block 4, 7, 48, 68-70, 74, 81, 91-93, 114, 115, 122, 139, 150-152, 154-156, 158, 162-166, 168-170, 172-175, 178, 179, 181, 182-184, 186-194, 198, 204, 207, 210-213, 216, 222-225, 229, 231, 233, 234, 236, 276, 277, 280, 282, 283, 285, 286, 287, 289, 290, 293-297, 300, 306, 308, 310, 318-320, 338-344, 346-354, 358, 408
logical block address . . 7, 68-70, 91-93, 115, 122, 150, 151, 154, 155, 164-166, 168-170, 172-175, 178, 179, 181, 183, 184, 186-193, 207, 210, 211, 212, 225, 229, 233, 276, 277, 282, 283, 285-287, 289, 290, 293-297, 300, 306, 310, 319, 338-344, 346, 347, 348-354, 408
LOGICAL BLOCK ADDRESS OUT OF RANGE 122, 408
logical block data 191
logical blocks per second of audio playback field 310
logical or physical notch 206
logical record length field 182
logical unit . . . . . xx, 4-6, 49, 54-57, 60, 61, 68, 70, 72-79, 81, 83-89, 91-93, 95-99, 101-104, 106, 109, 112, 113, 117-119, 122, 125, 126, 127, 134, 137, 139, 144, 145, 148, 149, 153, 158, 165-171, 173-181, 183-191, 196, 202-207, 215, 227-240, 242-245, 251-254, 257, 259-262, 271, 273, 274, 288-290, 292-297, 305, 310, 323, 325, 329, 331-333, 341, 342, 344-354, 360, 364-368, 375, 376, 378, 379, 381, 390, 393-395, 406, 408, 409
LOGICAL UNIT COMMUNICATION FAILURE 122, 406
LOGICAL UNIT COMMUNICATION PARITY ERROR 122, 406
LOGICAL UNIT COMMUNICATION TIME-OUT 122, 406
LOGICAL UNIT DOES NOT RESPOND TO SELECTION 122, 406
LOGICAL UNIT FAILED SELF-CONFIGURATION 122, 409

Copyright International Organization for Standardization
Provided by IHS under license with ISO
No reproduction or networking permitted without license from IHS
Not for Resale

LOGICAL UNIT HAS NOT SELF-CONFIGURED YET 122, 409
LOGICAL UNIT IS IN PROCESS OF BECOMING READY 122, 406
LOGICAL UNIT NOT READY, CAUSE NOT REPORTABLE 122, 406
LOGICAL UNIT NOT READY, FORMAT IN PROGRESS 122, 406
LOGICAL UNIT NOT READY, INITIALIZING COMMAND REQUIRED 122, 406
LOGICAL UNIT NOT READY, MANUAL INTERVENTION REQUIRED 122, 406
LOGICAL UNIT NOT SUPPORTED 75, 122, 126, 408
logical unit number 4, 5, 54, 57, 68, 70, 84, 86, 88, 89, 95, 96, 101, 103, 104, 106, 109, 112, 125-127, 158, 165-169, 171, 173-175, 177, 180, 181, 183-191, 227-230, 232, 233, 235-240, 242-244, 257, 259-262, 273, 274, 288-290, 292-294, 296, 297, 305, 323, 325, 329, 331-333, 341, 342, 344-354, 360, 364-368, 375, 376, 378, 379, 381, 393, 394, 395
long bit 227
LP bit 132, 133
LPN bit 206, 207
LU Valid bit 376
mandatory . xx, 4, 6, 52, 54, 60, 67, 70, 85, 114, 115, 125, 157, 158, 160, 176, 177, 179, 180, 221, 226, 240, 258, 273, 278, 287, 322, 340, 363, 392, 399, 412-415
maximum additional partitions field 253
maximum burst size field 143
maximum generation address field 346
maximum line length field 267
maximum number of notches field 206
maximum pre-fetch ceiling field 198
maximum pre-fetch field 198
maximum volume sequence number 383
MCVal 298, 301, 303
Measurement Units Page 335
MECHANICAL POSITIONING ERROR 122, 407
MEDIA LOAD OR EJECT FAILED 122, 410
MEDIUM DESTINATION ELEMENT FULL 122, 409
MEDIUM ERROR . 116, 119, 134, 136, 155, 161, 171, 175, 194, 223, 225, 231, 241, 242, 244, 263, 275, 277, 286, 307, 313-317, 329, 330, 334, 339, 350, 384, 397
MEDIUM FORMAT CORRUPTED 122, 408
medium format recognition field 253, 254
MEDIUM NOT PRESENT 122, 126, 409
Medium Partition Page 249, 250, 253, 254
MEDIUM REMOVAL PREVENTED 122, 167, 410
medium rotation rate field 202
MEDIUM SCAN command 276, 339, 342-344
MEDIUM SOURCE ELEMENT EMPTY 122, 409
medium transport element 359, 360, 364, 366-368, 372-375, 385, 386, 388, 389
medium transport element address field 360, 386
medium type 137, 156, 195, 205, 206, 307, 338, 355
medium types supported 196, 205, 309, 357
Medium Types Supported Page 196, 205, 309, 357
medium-changer devices 359
MESSAGE ERROR 47, 122, 409
MESSAGE IN phase 46, 48, 50, 56-59, 61, 63, 66, 73, 401
MESSAGE OUT phase 40, 42, 46-49, 52, 57, 59-61, 63, 65, 66, 73, 75, 81, 400
MESSAGE PARITY ERROR 48, 52, 59, 63, 65
MESSAGE REJECT 52, 56-60, 62-66, 80, 141
MF bit 197, 198
MICROCODE HAS BEEN CHANGED 83, 122, 129, 409
minimum pre-fetch field 198
minimum volume sequence number 383
MISCOMPARE 88, 96, 120, 122, 187, 189, 242, 243, 350, 354, 408

Copyright International Organization for Standardization
Provided by IHS under license with ISO
No reproduction or networking permitted without license from IHS
Not for Resale

MISCOMPARE DURING VERIFY OPERATION 122, 408
MISCORRECTED ERROR 122, 407
MO bit 201
mode field 109, 110, 128, 243, 247, 264, 266, 284, 296
mode parameter header 105, 107, 137, 194, 195, 243-246, 256, 263, 307, 308, 335, 355, 356, 384, 397
Mode Parameters . . 7, 70, 83, 104, 105, 107, 108, 117, 122, 137-140, 151, 176, 179, 194, 196, 216, 230, 237-239, 246, 263, 286, 289, 290, 292-294, 307, 321, 331, 333, 335, 350, 355, 384, 397, 408
MODE PARAMETERS CHANGED 104, 122, 408
MODE SELECT(10) command 106, 109
MODE SENSE(10) command 106, 107, 109
MODIFY DATA POINTER 52, 54, 60
motor off delay field 200
motor on 199-201
motor on delay field 200
MOVE MEDIUM command 362, 366, 367
MSF 280-287, 289-291, 293, 295-297, 300, 305, 306, 311, 319, 320, 414
mt 385
MULTIPLE PERIPHERAL DEVICES SELECTED 122, 406
MULTIPLE READ ERRORS 122, 407
multiplication factor 197
ND bit 204, 206
negation period 35, 36, 38, 43, 44, 403
nexus 3, 4, 39, 48, 54, 55, 57, 58, 60, 61, 70, 73-79, 81, 104, 112, 113, 141, 237
NO ADDITIONAL SENSE INFORMATION 113, 115, 122, 126, 406
NO CURRENT AUDIO STATUS TO RETURN 122, 299, 406
NO DEFECT SPARE LOCATION AVAILABLE 122, 175, 350, 408
NO GAP FOUND 122, 407
NO INDEX/SECTOR SIGNAL 122, 406
NO OPERATION 52, 60
NO SEEK COMPLETE 123, 406
NO SENSE 64, 76, 113, 119, 126, 171, 181, 182, 231, 235, 236, 240, 241, 243, 245, 260, 285, 344
NO WRITE CURRENT 123, 406
Non-Medium Error Page 134, 136, 194, 263, 275, 307, 334, 384, 397
Not Bus 375, 376
NOT READY . . . 76, 108, 117, 119, 122-124, 126, 127, 151, 158, 218, 228, 248, 271, 285, 289, 291-293, 321, 390, 406, 408, 409
NOT READY TO READY TRANSITION(MEDIUM MAY HAVE CHANGED) 408
not this bus 376
Notch and Partition Page 196, 206
notched drive 206
number of blocks field 90-94, 139, 165, 184, 186, 191
number of blocks in buffer field 234
number of blocks requested field 343, 344
number of blocks to scan field 343, 344
number of bytes in buffer field 235
number of cylinders field 200, 214, 215
number of data transfer elements field 387
number of elements available field 369
number of F units per S unit field 311
number of heads field 200, 214
number of import export elements field 387
number of medium transport elements field 386
number of records field 182
number of S units per M unit field 311
number of storage elements field 387
OBJECT POSITION command 329

Copyright International Organization for Standardization
Provided by IHS under license with ISO
No reproduction or networking permitted without license from IHS
Not for Resale

offset boundary field 111
operation code 67-70, 86, 88, 89, 95, 96, 101, 103, 104, 106, 109, 112, 122, 125-127, 158, 165-169, 171, 173-175, 177, 180, 181, 183, 184-191, 227-230, 232, 233, 235-239, 242-244, 259-262, 273, 274, 288-290, 292-297, 305, 323, 325, 329, 331, 332, 333, 341, 342, 344-354, 364-368, 376, 378, 379, 381, 393-395, 408
OPERATOR MEDIUM REMOVAL REQUEST 123, 410
OPERATOR REQUEST OR STATE CHANGE INPUT (UNSPECIFIED) 123, 410
OPERATOR SELECTED WRITE PERMIT 123, 410
OPERATOR SELECTED WRITE PROTECT 123, 410
optical memory devices . . . . . xix, 115, 276, 279, 338, 340, 355-358
Optical Memory Page 357, 358
ORDERED QUEUE TAG 52, 60, 61, 72, 79, 80
OUT OF FOCUS 123, 410
output port channel selection 310
OVERLAPPED COMMANDS ATTEMPTED 75, 123, 409
OVERWRITE ERROR ON UPDATE IN PLACE 123, 408
pacing protocol field 270
pad bit 89, 92, 94
padding type field 328
page code field 96, 104, 107, 108, 112, 130, 131, 139, 146, 148
page control 101, 103, 106, 107
page format 104, 107, 112, 125, 129-131, 135, 139, 140, 196, 250, 264, 309, 335, 357, 384, 397
page length field 130, 131, 137, 139, 140, 145-149, 193
pages notched field 207
paper instruction parity check 265
PAPER JAM 123, 329, 409
Parallel Printer Interface Page 264
parameter code field 132, 134
parameter code reset 101
parameter data length field 86
parameter list length 64, 68-70, 88, 89, 91-95, 101, 102, 104-106, 123, 125-129, 342, 343, 381, 408
PARAMETER LIST LENGTH ERROR 105, 123, 408
parameter list length field 89, 102, 105, 126, 128
PARAMETER NOT SUPPORTED 123, 408
parameter pointer control 103
parameter rounding 76
parameter value field 136
PARAMETER VALUE INVALID 123, 408
PARAMETERS CHANGED 102, 104, 122, 123, 408
parameters savable . . . 139, 196, 199, 203, 206, 208, 214, 216, 264, 266, 269, 309, 311, 312, 318, 336, 358, 385, 386, 388
parity select field 264
parity selection field 270
partial medium indicator 170, 295
partial results acceptable 343
partition field 229, 250, 251
partition size descriptor 253, 254
partition size field 254
partition size unit of measure 253
pattern field 182, 183
pattern length field 164, 182, 183
pattern type field 164
PAUSE RESUME command 288
PCR bit 101
PER bit 209, 255
Peripheral Device Page 140, 144, 196, 250, 264, 309, 335, 357, 397
peripheral device type field 145-149

Copyright International Organization for Standardization
Provided by IHS under license with ISO
No reproduction or networking permitted without license from IHS
Not for Resale

PERIPHERAL DEVICE WRITE FAULT 123, 406
peripheral qualifier field 145-149
PF bit 104, 125, 126, 129
physical block data 191
pin 2 field 201, 202
pin 34 field 201
pin 4 field 201
PIPC 264, 265
PLAY AUDIO MSF command 290
PLAY AUDIO TRACK INDEX command 292
PLAY AUDIO(10) command 289, 290
PLAY AUDIO(12) command 290
PList bit 171, 172
PMI bit 151, 170, 295
POSITION ERROR RELATED TO TIMING 123, 409
position function field 329
POSITION PAST BEGINNING OF MEDIUM 123, 409
POSITION PAST END OF MEDIUM 123, 409
POSITION TO ELEMENT command 367
POSITIONING ERROR DETECTED BY READ OF MEDIUM 123, 407
post error 208, 255
POWER ON, RESET, OR BUS DEVICE RESET OCCURRED 123, 408
POWER-ON OR SELF-TEST FAILURE (SHOULD USE 40 NN) 123, 409
power-on to selection time 35, 36, 47
PPC bit 103
PRA 342-344
PRE-FETCH command 166
prevent 26, 49, 62, 100, 150, 152-154, 157, 167, 177, 226, 238, 252, 277, 287, 340, 363, 413
PREVENT ALLOW MEDIUM REMOVAL command 150, 167
prevent bit 153, 167, 177, 238
primary defect list 123, 158, 161, 171, 172, 408
PRIMARY DEFECT LIST NOT FOUND 123, 408
primary volume tag 362, 371-375, 382
primary volume tag information field 371
PRINT command 260-262, 266-268
printer devices . . . . . xix, 114, 115, 257, 258, 261, 263, 264, 269
Printer Options Page 261, 262, 264, 266
priority field 90, 197
product identification field 100
product serial number field 149
progress indication field 117
PS bit . . 105, 107, 139, 161, 196, 199, 203, 206, 208, 214, 216, 264, 266, 269, 309, 311, 312, 318, 336, 358, 385, 386, 388
PSUM 253, 254
PVolTag 371-375
QErr bit 141
queue algorithm modifier field 140
queue error management 80, 141
QUEUE FULL status 78-80
queue tag 4, 49, 52, 54, 57, 58, 60, 61, 72, 78-82, 140, 141
queued I/O process 4, 55, 80
RAENP bit 141
RAM FAILURE (SHOULD USE 40 NN) 123, 409
RANDOM POSITIONING ERROR 123, 407
RAREA bit 193
RBO 236, 250, 251

Copyright International Organization for Standardization
Provided by IHS under license with ISO
No reproduction or networking permitted without license from IHS Not for Resale

RC bit . . . 208
RCD bit . . . 197
READ BLOCK LIMITS command . . . 230, 232, 243
READ BUFFER command . . . 109, 110, 127, 128
read cache disable . . . 197
READ CAPACITY command . . . 150, 169, 172, 295
READ CD-ROM CAPACITY command . . . 282, 283, 294
read continuous . . . 208
READ DEFECT DATA(10) command . . . 345
READ DEFECT DATA(12) command . . . 345
READ ELEMENT STATUS command . . . 361, 362, 365, 368, 369, 377
read exclusive . . . 178, 179
READ GENERATION command . . . 346
READ HEADER command . . . 296
read inhibit . . . 184
READ LONG command . . . 173, 190
READ PAST BEGINNING OF MEDIUM . . . 123, 409
READ PAST END OF MEDIUM . . . 123, 409
READ POSITION command . . . 223, 224, 233
READ RETRIES EXHAUSTED . . . 123, 407
READ REVERSE command . . . 235
read shared . . . 178, 179
READ SUB-CHANNEL command . . . 283, 297
READ TOC command . . . 281, 305
READ(06) command . . . 168
READ(10) command . . . 168, 189, 344
READ(12) command . . . 344
Read-Write Error Recovery Page . . . 189, 196, 207, 216, 225, 250, 254, 357
ready AEN permission . . . 141
REASSIGN BLOCKS command . . . 151, 153, 159, 174, 175, 208, 339
RECEIVE command . . . 271-273, 275
RECEIVE DIAGNOSTIC RESULTS command . . . 85, 112, 125, 126, 129, 130, 192, 193
reconnect . . . 4, 41, 56-59, 61, 75, 77, 79, 135, 140, 142, 196, 249, 264, 271, 309, 335, 357, 390, 391, 397
RECORD NOT FOUND . . . 123, 407
RECORDED ENTITY NOT FOUND . . . 123, 407
recover buffer order . . . 251
RECOVER BUFFERED DATA command . . . 236, 251, 260, 262
RECOVERED DATA - DATA AUTO-REALLOCATED . . . 123, 407
RECOVERED DATA - RECOMMEND REASSIGNMENT . . . 123, 407
RECOVERED DATA - RECOMMEND REWRITE . . . 123, 407
RECOVERED DATA USING PREVIOUS SECTOR ID . . . 123, 407
RECOVERED DATA WITH CIRC . . . 123, 407
RECOVERED DATA WITH ERROR CORRECTION & RETRIES APPLIED . . . 123, 407
RECOVERED DATA WITH ERROR CORRECTION APPLIED . . . 123, 407
RECOVERED DATA WITH L-EC . . . 123
RECOVERED DATA WITH NEGATIVE HEAD OFFSET . . . 123, 407
RECOVERED DATA WITH NO ERROR CORRECTION APPLIED . . . 123, 407
RECOVERED DATA WITH POSITIVE HEAD OFFSET . . . 123, 407
RECOVERED DATA WITH RETRIES . . . 123, 407
RECOVERED DATA WITH RETRIES AND/OR CIRC APPLIED . . . 123, 407
RECOVERED DATA WITHOUT ECC - DATA AUTO-REALLOCATED . . . 123, 407
RECOVERED DATA WITHOUT ECC - RECOMMEND REASSIGNMENT . . . 123, 407
RECOVERED DATA WITHOUT ECC - RECOMMEND REWRITE . . . 123, 407
RECOVERED ERROR . . . 76, 113, 116, 119, 133, 136, 155, 161, 171, 209-212, 215, 225, 231, 235, 243, 245, 277, 286, 313-317, 339, 350, 358
RECOVERED ID WITH ECC . . . 123, 408

Copyright International Organization for Standardization
Provided by IHS under license with ISO
No reproduction or networking permitted without license from IHS
Not for Resale

REFERENCE POSITION FOUND 122, 406
RelAdr bit 99, 165, 166, 169, 170, 173, 181, 186, 187, 189-191, 341, 343, 346, 347, 349, 351, 352, 354
RELEASE command 175-178, 378-380
RELEASE RECOVERY 3, 39, 52, 61, 78
RELEASE UNIT command 237, 238
removable 76, 83, 85, 98, 119, 150, 151, 155, 205, 338, 361, 389
report early-warning 251
report log exception condition 140
report setmarks 251
report updated block read 350, 358
REPOSITION ERROR 123, 409
REQUEST SENSE command . . . 39, 64, 75-77, 83, 85, 87, 112-114, 117, 146, 158, 181, 182, 271, 285, 321, 343, 344, 391
request to send 270
REQUEST VOLUME ELEMENT ADDRESS command 376, 381, 382
RESELECTION phase 4, 33, 37, 39-42, 48, 54, 58, 81, 399
RESERVATION CONFLICT status 153, 158, 177-180, 238, 239, 379-381
reservation identification field 177
reservation type field 178
RESERVE command 104, 153, 154, 176-180, 238, 376, 379-381
RESERVE UNIT command 237-239
reserved area 193
reset condition . . 3, 32, 36, 39, 45, 47-50, 56, 62-64, 66, 71, 75, 78, 83, 87, 99, 103, 104, 107, 108, 167, 177-179, 238, 248, 379, 380
reset hold time 35, 37, 48
reset to selection time 35, 36, 49
response data format field 87
RESTORE POINTERS 51, 52, 54, 57, 59, 61, 73
resume bit 288
retain bit 262
reverse scan direction 343
REW 231, 241-243, 245, 250-252, 256
REWIND command 76, 221, 239
REZERO UNIT command 154, 180
RIBBON, INK, OR TONER FAILURE 123, 408
RIF 326, 328
Rigid Disk Drive Geometry Page 214
RLEC bit 133, 134, 136, 140
RMB bit 98, 205
rotate bit 388
ROUNDED PARAMETER 76, 123, 409
RPL 123, 214, 215, 410
RPL STATUS CHANGE 123, 215, 410
RSD 342, 343
RSmk 94, 114, 231, 236, 240-242, 250, 251
RTS 269, 270
RUBR 358
save bit 86
SAVE DATA POINTER 49, 51, 52, 56, 61, 62, 73
save implemented 147
save parameters 101, 103, 205
SavImp bit 147
SAVING PARAMETERS NOT SUPPORTED 108, 123, 409
SCAN command 276, 323, 332, 339, 342-344
SCAN HEAD POSITIONING ERROR 123, 410
scanner devices . . . . . xix, 320-322, 334, 335, 337

Copyright International Organization for Standardization
Provided by IHS under license with ISO
No reproduction or networking permitted without license from IHS
Not for Resale

SCSI ID 5, 30, 33, 36, 40, 41, 77, 360, 361, 399, 400
SCSI PARITY ERROR 123, 409
SCSI Pointers 51
SCSI TO HOST SYSTEM INTERFACE FAILURE 123, 410
SCSI-2 . . . . . 2, xix, xx, 1, 5, 6, 8, 32, 41, 70, 74, 79, 84, 86, 87, 99, 140, 399, 405, 406, 412, 416
SCTE 266, 267
SDP 253
search argument descriptor 182, 183
search argument length field 182
sectors per track field 200, 204
SEEK(06) command 183
SEEK(10) command 183
segment descriptor 89-94, 114, 115
segment number field 114
select data compression algorithm field 252
select data partitions 253
SELECT OR RESELECT FAILURE 123, 409
selection abort time 35, 37, 41, 42, 400
SELECTION phase 3, 33, 39, 40, 48, 54, 57, 73, 81, 399
selection time-out delay 35, 37, 41, 42
self test 85, 119
send action code field 377, 381
SEND DIAGNOSTIC command 85, 112, 125, 129, 130, 192-194
SEND MESSAGE(06) command 394-396
SEND MESSAGE(10) command 395
SEND MESSAGE(12) command 395
SEND VOLUME TAG command 361, 362, 376, 377, 381-383
sense key field 115, 116
sense-key specific field 116, 117
sense-key specific valid 116
SEQUENTIAL POSITIONING ERROR 124, 409
sequential-access devices . . . . . xix, 75, 90, 94, 95, 114, 115, 139, 218, 224, 226, 227, 246, 249
Serial Printer Interface Page 264, 269
SET LIMITS(10) command 348
SET LIMITS(12) command 348
SET WINDOW command 327, 333
SETMARK DETECTED 124, 231, 236, 240, 241, 406
SEW 243, 245, 250-252
SftRe bit 48, 99
SILI 230, 235, 236
SIMPLE QUEUE TAG 52, 58, 60, 61, 72, 79, 81, 140, 141
single bit 40, 325
SKSV bit 116, 117
SLEW AND PRINT command 260-262, 266-268
SLEW FAILURE 124, 409
slew mode field 266
slew value field 261
SOCF 250-252
soft sector 204, 205
SOTC 289, 290, 292-294, 309, 310
source block length field 93
source logical block address field 93
source storage element address field 373, 374
source valid 373
SP bit 101, 103, 105, 108, 132
SPACE command 240

Copyright International Organization for Standardization
Provided by IHS under license with ISO
No reproduction or networking permitted without license from IHS
Not for Resale

spanned data . . . 181
speed field . . . 247
SPINDLE SERVO FAILURE . . . 124, 406
SPINDLES NOT SYNCHRONIZED . . . 124, 410
SPINDLES SYNCHRONIZED . . . 124, 410
SpnDat bit . . . 181
SSEC bit . . . 204
SSN bit . . . 200
st . . . 385
start 3, 51, 76, 100, 126, 150, 151, 153, 155, 157, 181, 183, 185, 200, 266, 267, 278, 287-289, 292, 293, 306, 320, 340, 361, 412
start bit . . . 185
start sector number . . . 200
starting boundary field . . . 207
starting F field . . . 290, 291
starting index field . . . 292
starting M field . . . 290, 291
starting S field . . . 290, 291
starting track field . . . 292, 293, 305
status . . . xix, 3, 5, 30, 32, 33, 36, 39, 42, 43, 45-51, 55-59, 61, 64, 67, 71-73, 75-83, 85, 88, 90-93, 95, 96, 100-105, 107, 108, 110, 111, 113, 116-119, 122, 123, 125, 126, 128, 130, 131, 133, 134, 136, 139, 143, 151, 153, 154, 158, 159, 161, 162, 164, 166, 169-173, 175-182, 185-187, 189-192, 197, 200, 204, 205, 208-213, 215, 218, 223, 225, 227, 228, 229-231, 235-245, 247, 251, 255, 260-262, 264, 267, 268, 271, 275, 276, 285-289, 291-293, 298, 299, 302, 303, 305, 310, 312-317, 321-324, 329-331, 333, 336, 339, 341, 343, 347, 350-352, 354, 356-358, 361-366, 368, 369, 370-373, 377-381, 387, 390, 400, 406, 410, 412, 413, 415
STATUS phase . . . 39, 46, 48, 71, 73, 400
step count truncate enable . . . 267
step pulse per cylinder . . . 201
stop bit length field . . . 270
stop format . . . 161
stop on consecutive filemarks . . . 251
stop on track crossing . . . 292, 293, 310
STOP PRINT command . . . 262
storage element . . . 359, 361, 364, 366, 368, 372-375, 385-387, 389
STPF bit . . . 161
stream selection field . . . 393-396
sub-channel data format code . . . 298, 302, 303
sub-channel data format field . . . 297, 298, 303, 304
sub-channel data header . . . 298, 302, 303
sub-channel data length field . . . 298
SubQ . . . 297, 298
supplied format field . . . 192, 193
Supported Diagnostic Pages . . . 130, 192, 246, 263, 307, 334, 383
Supported Log Pages . . . 134, 136, 137, 194, 246, 263, 307, 335, 384, 396, 397
supported page list field . . . 130, 137, 148
Supported Vital Product Data Pages . . . 145, 148
suppress incorrect length indicator . . . 230
SURF bit . . . 205
surface . . . 205, 337
SValid . . . 372-375
SYNCHRONIZE BUFFER command . . . 262, 268
SYNCHRONIZE CACHE command . . . 154, 185, 186
SYNCHRONOUS DATA TRANSFER ERROR . . . 124, 408
SYNCHRONOUS DATA TRANSFER REQUEST . . . 52, 54, 62, 77
SYSTEM RESOURCE FAILURE . . . 124, 410
TAPE LENGTH ERROR . . . 124, 408

Copyright International Organization for Standardization
Provided by IHS under license with ISO
No reproduction or networking permitted without license from IHS
Not for Resale

TAPE OR ELECTRONIC VERTICAL FORMS UNIT NOT READY 124, 409
TAPE POSITION ERROR AT BEGINNING-OF-MEDIUM 124, 409
TAPE POSITION ERROR AT END-OF-MEDIUM 124, 409
target certification list 159
TARGET OPERATING CONDITIONS HAVE CHANGED 124, 409
target routine 4, 5, 54-57, 60, 75, 78, 79, 84, 274
target save disable 132
TB bit 208, 255
TCVal 298, 301, 304
TERMINATE I/O PROCESS 52, 64, 72, 75, 99
TEST UNIT READY command 77, 85, 126, 150, 271, 321
third party 89, 104, 175, 177, 179, 237, 238, 378-380
third party reservation 104, 179, 238, 380
THRESHOLD CONDITION MET 124, 133, 410
threshold field 327
threshold met criteria 132, 133
THRESHOLD PARAMETERS NOT SUPPORTED 124, 408
TOO MANY WINDOWS SPECIFIED 124, 408
track code valid 301
TRACK FOLLOWING ERROR 124, 406
track number field 298, 306
track relative CD-ROM address field 300
track skew factor field 204
TRACKING SERVO FAILURE 124, 406
tracks per zone field 203, 204
transfer block 208-212, 255
transfer length 51, 64, 68-70, 128, 139, 166, 168, 169, 173, 187-190, 196, 198, 225, 226, 230, 231, 235-237, 243-245, 256, 259, 260, 261, 267, 274, 286, 289, 290, 293, 294, 310, 325, 331-333, 341, 342, 344, 348, 352-354, 394, 395
transfer period 35, 37, 43, 45, 62, 63, 403
Translate Address Page - RECEIVE DIAGNOSTIC 192, 193
Translate Address Page - SEND DIAGNOSTIC 192
translate format field 192, 194
translated address field 194
transport element address field 360, 386
transport geometry descriptor 388
true ready 200
TSD bit 101, 132
UAAENP bit 141
UNABLE TO ACQUIRE VIDEO 124, 410
UNABLE TO RECOVER TABLE-OF-CONTENTS 124, 410
unexpected disconnect 3, 5, 45, 47, 48, 54, 57, 71, 112, 117
unexpected reselection 77
UNIT ATTENTION 49, 56, 75-77, 80, 83, 87, 96, 102, 104, 119, 129, 133, 139, 141, 154, 176, 178, 215, 225, 237, 248, 277, 286, 339, 380
unit attention AEN permission 141
unit off-line 125
Unit Serial Number Page 145, 149
UnitOfL bit 125
UNLOAD TAPE FAILURE 124, 410
UNRECOVERED READ ERROR 124, 155, 223, 225, 277, 286, 339, 407
UNRECOVERED READ ERROR - AUTO REALLOCATE FAILED 124, 407
UNRECOVERED READ ERROR - RECOMMEND REASSIGNMENT 124, 407
UNRECOVERED READ ERROR - RECOMMEND REWRITE THE DATA 124, 407
UNSUCCESSFUL SOFT RESET 124, 409
UPDATE BLOCK command 349, 350, 356, 358

Copyright International Organization for Standardization
Provided by IHS under license with ISO
No reproduction or networking permitted without license from IHS
Not for Resale

UPDATED BLOCK READ 124, 350, 358, 410
VCBP 264, 265
VCBS 264, 265
vendor identification field 100
verification length field 187
verify correction span field 216
Verify Error Recovery Page 189, 196, 215, 216, 309, 357
verify recovery time limit field 216
verify retry count field 209-211, 216
VERIFY(10) command 350, 351, 353, 354
VERIFY(12) command 351, 354
vertical forms unit 124, 265-267, 409
VES 264, 265
VFU 265
VFU control bit polarity 265
VFU control bit select 265
VFU extended skip 265
VIDEO ACQUISITION ERROR 124, 410
Vital Product Data Parameters 7, 144
VolTag 368, 376, 377
volume identification field 362
volume identification template field 382, 383
VOLUME OVERFLOW 120, 225, 243-245, 251
volume sequence number field 362, 383
volume tag 361-363, 368, 371-377, 381-383, 415
wait bit 323
WBS 342, 343
WCE bit 197
WIDE DATA TRANSFER REQUEST 44, 52, 54, 64
window length field 327
window width field 327
WP bit 195, 247, 356
WRITE AND VERIFY(10) command 353, 354
WRITE AND VERIFY(12) command 354
WRITE APPEND ERROR 124, 409
WRITE APPEND POSITION ERROR 124, 409
WRITE BUFFER command 109, 110, 127, 129
write cache enable 197
WRITE ERROR 115, 124, 189, 196, 207, 216, 223, 225, 226, 250, 254, 255, 357, 407
WRITE ERROR - AUTO REALLOCATION FAILED 124, 407
WRITE ERROR RECOVERED WITH AUTO REALLOCATION 124, 407
write exclusive 178, 179
WRITE FILEMARKS command 223, 228, 239, 243-245, 252
write inhibit 184
WRITE LONG command 190
write precompensation field 200, 201, 214
write protect 76, 123, 195, 247, 410
WRITE PROTECTED 124, 155, 195, 218, 225, 247, 277, 339, 356, 408
write retention priority field 197
WRITE SAME command 191
write setmark 244
WRITE(06) command 188
WRITE(10) command 188, 189, 352, 353
WRITE(12) command 353
written block search 343
WSmk 244

Copyright International Organization for Standardization
Provided by IHS under license with ISO
No reproduction or networking permitted without license from IHS
Not for Resale

X-axis resolution field 327
X-axis upper left field 327
Y-axis resolution field 327
Y-axis upper left field 327

Copyright International Organization for Standardization
Provided by IHS under license with ISO
No reproduction or networking permitted without license from IHS
Not for Resale

© ISO/IEC

ICS 35.200

Descriptors: data processing, information interchange, network interconnection, computers, computer peripheral equipment, computer interfaces, data bus, multi-contact connectors, specifications, operating requirements, mechanical properties, electrical properties.

Price based on 439 pages

Copyright International Organization for Standardization
Provided by IHS under license with ISO
No reproduction or networking permitted without license from IHS

Not for Resale