INTERNATIONAL STANDARD

ISO/IEC 9314-8

First edition
1998-08

Information technology –
Fibre Distributed Data Interface (FDDI) –

Part 8:
Media Access Control-2 (MAC-2)

Reference number
ISO/IEC 9314-8:1998(E)

Copyright International Organization for Standardization
Reproduced by IHS under license with ISO
No reproduction or networking permitted without license from IHS

Not for Resale

Copyright International Organization for Standardization
Reproduced by IHS under license with ISO
No reproduction or networking permitted without license from IHS
Not for Resale

INTERNATIONAL STANDARD

ISO/IEC 9314-8

First edition
1998-08

Information technology –
Fibre Distributed Data Interface (FDDI) –

Part 8:
Media Access Control-2 (MAC-2)

© ISO/IEC 1998

All rights reserved. Unless otherwise specified, no part of this publication may be reproduced or utilized in any form or by any means, electronic or mechanical, including photocopying and microfilm, without permission in writing from the publisher.

ISO/IEC Copyright Office • Case postale 56 • CH-1211 Genève 20 • Switzerland

CODE PRIX
PRICE CODE XA

Pour prix, voir catalogue en vigueur
For price, see current catalogue

Copyright International Organization for Standardization
Reproduced by IHS under license with ISO
No reproduction or networking permitted without license from IHS

Not for Resale

CONTENTS

Page

FOREWORD v

INTRODUCTION vi

Clause

1 Scope 1

2 Normative references 3

3 Definitions 4

4 Conventions and abbreviations 7
4.1 Conventions 7
4.1.1 Addressing 7
4.1.2 Timing values and timers 7
4.2 Abbreviations 8

5 General description 10

6 Services 11
6.1 MAC-to-LLC services 12
6.1.1 MA_UNITDATA.request 12
6.1.2 MA_UNITDATA.indication 14
6.1.3 MA_UNITDATA_STATUS.indication 16
6.1.4 MA_TOKEN.request 16
6.2 MAC-to-PHY services 17
6.2.1 PH_UNITDATA.request 18
6.2.2 PH_UNITDATA.indication 18
6.2.3 PH_INVALID.indication 18
6.3 MAC-to-H-MUX Services 19
6.3.1 HM_MODE.indication 19
6.3.2 HP_UNITDATA.request 20
6.3.3 HP_UNITDATA.indication 20
6.3.4 HP_INVALID.indication 21
6.3.5 HP_MODE.request 21
6.4 MAC-to-SMT services 22
6.4.1 SM_MA_INITIALIZE_PROTOCOL.request 22
6.4.2 SM_MA_CONTROL.request 24
6.4.3 SM_MA_STATUS.indication 26
6.4.4 SM_MA_UNITDATA.request 28
6.4.5 SM_MA_UNITDATA.indication 29
6.4.6 SM_MA_UNITDATA_STATUS.indication 31
6.4.7 SM_MA_TOKEN.request 31

7 Facilities 32
7.1 Symbol set 32
7.1.1 Line state symbols 32
7.1.2 Control symbols 33
7.1.3 Data Quartets (0-F) 34
7.1.4 Violation symbol (V) 34

Copyright International Organization for Standardization
Reproduced by IHS under license with ISO
No reproduction or networking permitted without license from IHS Not for Resale

7.2 Protocol Data Units 34
7.2.1 Token 35
7.2.2 Frame 35
7.3 Fields 36
7.3.1 Preamble (PA) 36
7.3.2 Starting Delimiter (SD) 36
7.3.3 Frame Control (FC) 36
7.3.4 Destination and source addresses 39
7.3.5 Routing Information (RI) field 42
7.3.6 Information (INFO) field 42
7.3.7 Frame Check Sequence (FCS) 43
7.3.8 Ending Delimiter (ED) 44
7.3.9 Frame Status (FS) 45
7.4 Timers 46
7.4.1 Token-Holding Timer (THT) 46
7.4.2 Valid-Transmission Timer (TVX) 46
7.4.3 Token-Rotation Timer (TRT) 47
7.4.4 Late Counter (Late_ct) 48
7.4.5 Token Counter (Token_ct) 48
7.5 Frame counts 48
7.5.1 Frame_ct 48
7.5.2 Error_ct 48
7.5.3 Lost_ct 48
7.5.4 Copied_ct 49
7.5.5 Transmit_ct 49
7.5.6 Not_Copied_ct 49

8 Operation 49
8.1 Overview 49
8.1.1 Frame transmission 50
8.1.2 Token transmission 50
8.1.3 Frame stripping 50
8.1.4 Ring scheduling 51
8.1.5 Ring monitoring 53
8.2 Structure 55
8.3 Receiver 56
8.3.1 Token and frame validity criteria 57
8.3.2 State R0: LISTEN 58
8.3.3 State R1: AWAIT_SD (Await Starting Delimiter) 58
8.3.4 State R2: RC_FR_CTRL (Receive Frame Control Field) 59
8.3.5 State R3: RC_FR_BODY (Receive Frame Body) 60
8.3.6 State R4: RC_FR_STATUS (Receive Frame Status) 62
8.3.7 State R5: CHECK_TK (Check Token) 64
8.4 Transmitter 65
8.4.1 State T0: TX_IDLE (Transmitter Idle) 65
8.4.2 State T1: REPEAT (Repeat) 67
8.4.3 State T2: TX_DATA (Transmit data) 69
8.4.4 State T3: ISSUE_TK (Issue Token) 71
8.4.5 State T4: CLAIM_TK (Claim Token) 72
8.4.6 State T5: TX_BEACON (Transmit Beacon) 73

Copyright International Organization for Standardization
Reproduced by IHS under license with ISO
No reproduction or networking permitted without license from IHS
Not for Resale

Annex A (informative) Addressing 83
A.1 General structure 83
A.2 Administration of addresses 83
A.2.1 Locally administered addresses 84
A.2.2 Universally administered addresses 84
A.3 Transmission order 85
A.3.1 Representation of addresses 85
A.4 Group addresses 86
A.4.1 Broadcast address 86
A.4.2 Assignment of group addresses for use in standards 87
A.4.3 Group addresses assigned for use in FDDI 87
A.5 Source routing addressing 87
A.6 References 87
Annex B (informative) Frame Check Sequence 88
B.1 Description 88
B.2 Generation of the FCS 88
B.3 Checking the FCS 89
B.4 Implementation 89
B.5 Related standards 91
Annex C (informative) Bridging 92
C.1 Bridge architectures 92
C.2 Destination Address recognition 93
C.3 Indicator setting 93
C.4 Stripping 93
Annex D (informative) Elements of timer calculation 95
Annex E (informative) Bibliography 98

Tables

Table 1 – Interpretation of FC field 59

Figures

Figure 1 – FDDI structure 3
Figure 2 – Token ring logical configuration example 11
Figure 3 – MAC Receiver state diagram 75
Figure 4 – MAC Transmitter state diagram 79
Figure B.1 – FCS implementation example 90

--`,,`,,`-`-`,,`,,`,`,,`---

Copyright International Organization for Standardization
Reproduced by IHS under license with ISO
No reproduction or networking permitted without license from IHS Not for Resale

FOREWORD

ISO (the International Organization for Standardization) and IEC (the International Electrotechnical Commission) form the specialized system for worldwide standardization. National bodies that are members of ISO or IEC participate in the development of International Standards through technical committees established by the respective organization to deal with particular fields of technical activity. ISO and IEC technical committees collaborate in fields of mutual interest. Other international organizations, governmental and non-governmental, in liaison with ISO and IEC, also take part in the work.

In the field of information technology, ISO and IEC have established a joint technical committee, ISO/IEC JTC 1. Draft International Standards adopted by the joint technical committee are circulated to national bodies for voting. Publication as an International Standard requires approval by at least 75 % of the national bodies casting a vote.

International Standard ISO/IEC 9314-8 was prepared by Joint Technical Committee ISO/IEC JTC 1 *Information technology*, Subcommittee SC 25*, Interconnection of information technology equipment.*

ISO/IEC 9314 consists of the following parts, under the general title *Information technology – Fibre Distributed Data Interface (FDDI):*

– *Part 1: Token Ring Physical Layer Protocol (PHY) (1989)*

– *Part 2: Token Ring Media Access Control (MAC) (1989)*

– *Part 3: Physical Layer Medium Dependent (PMD) (1990)*

– *Part 4: Single Mode Fibre Physical Layer Medium Dependent (SMF-PMD)* [1)]

– *Part 5: Hybrid Ring Control (HRC) (1995)*

– *Part 6: Station Management (SMT)*

– *Part 7: Physical Layer Protocol (PHY-2)*

– *Part 8: Media Access Control-2 (MAC-2)*

– *Part 9: Low-Cost Fibre – Physical Medium Dependent (LCF-PMD) (under consideration)*

– *Part 10: Token Ring Twisted Pair Physical layer Medium Dependent (TP-PMD) (under consideration)*

– *Part 13: Conformance Test Protocol Implementation Conformance Statement Proforma (CT-PICS)*

– *Part 20: Physical Medium Dependent Conformance Testing (PMD-ATS) (under consideration)*

– *Part 21: Physical Layer Protocol Conformance Testing (PHY-ATS) (under consideration)*

– *Part 25: Abstract test suite for FDDI – Station Management Conformance Testing (SMT-ATS)*

– *Part 26: Media Access Control Conformance Testing (MAC-ATS) (under consideration)*

1) To be published

Copyright International Organization for Standardization
Reproduced by IHS under license with ISO
No reproduction or networking permitted without license from IHS Not for Resale

INTRODUCTION

The Fibre Distributed Data Interface (FDDI), ISO/IEC 9314, is intended for use in a high-performance general purpose multi-node network and is designed for efficient operation with a peak data rate of 100 Mbit/s. It uses a Token Ring architecture with optical fibre as the transmission medium. FDDI provides for hundreds of nodes operating over an extent of tens of kilometres.

The Media Access Control (MAC) specifies the lower sublayer of the Data Link Layer for the FDDI. As such, it presents the specifications and services provided for conforming FDDI attachment devices. MAC specifies the access to the medium, including addressing, data checking, and data framing. MAC also specifies the receiver and transmitter state machines.

When the set of basic FDDI standards, ISO/IEC 9314, is completed it will include the following standards:

a) A Physical Layer Protocol (PHY), which specifies the upper sublayer of the Physical Layer of ISO/IEC 9314.

b) A Physical Layer Media Dependent (PMD), which specifies the lower sublayer of the Physical Layer of ISO/IEC 9314.

c) A Station Management (SMT), which specifies the local portion of the system management application process of ISO/IEC 9314.

A number of extensions to ISO/IEC 9314 are completed or in process. One extension, ISO/IEC 9314-5, for Hybrid Ring Control (HRC), commonly known as FDDI-II, extends the capability of FDDI to handle isochronous data streams at a multiplicity of data rates. Another extension, ISO/IEC 9314-4, provides for a single-mode optical fibre version of PMD (SMF-PMD) and will permit optical links of up to 60 km.

Other work, addressing alternate PMDs, is aimed at providing low-cost attachments for use in concentrator-to-workstation environments. This work includes a Low-Cost Fibre PMD (LCF-PMD) and a (copper) Twisted Pair PMD (TP-PMD).

This part of ISO/IEC 9314 for MAC-2 is an enhancement to the original FDDI standard on MAC (ISO 9314-2). It is referred to as MAC-2 when it is necessary to distinguish it from the original MAC. Changes include those identified in footnotes to ISO 9314-2 as areas that the standards committee intended to change as well as changes that were required for extensions to FDDI, such as FDDI-II and MAC level bridging. MAC-2 also includes editorial corrections and clarifications.

--`,,`,,`-`-`,,`,,`,`,,`---

Copyright International Organization for Standardization
Reproduced by IHS under license with ISO
No reproduction or networking permitted without license from IHS Not for Resale

INFORMATION TECHNOLOGY — FIBRE DISTRIBUTED DATA INTERFACE (FDDI) —

Part 8: Media Access Control-2 (MAC-2)

1 Scope

This part of ISO/IEC 9314 specifies the Media Access Control (MAC), the middle sublayer of the Data Link Layer (DLL), for Fibre Distributed Data Interface (FDDI).

FDDI (ISO/IEC 9314) provides a high-bandwidth (100 Mbit/s), general-purpose interconnection among information processing systems, subsystems and peripheral equipment, using fibre optics or other transmission media. FDDI can be configured to support a sustained data transfer rate of at least 80 Mbit/s (10 Mbyte/s). FDDI provides connectivity for many nodes distributed over distances of many kilometres in extent. Certain default parameter values for FDDI (e.g. timer settings) are calculated on the basis of up to 1 000 transmission links or up to 200 km total fibre path length (typically corresponding to 500 nodes and 100 km of dual fibre cable, respectively); however, the FDDI protocols can support much larger networks by increasing these parameter values.

As shown in figure 1, ISO/IEC 9314 consists of

a) A Physical Layer (PL), which is divided into two sublayers:

   1) A Physical Medium Dependent (PMD), which provides the digital baseband point-to-point communication between nodes in the FDDI network. The PMD provides all services necessary to transport a suitably coded digital bit stream from node to node. The PMD defines and characterizes the fibre-optic drivers and receivers, medium-dependent code requirements, cables, connectors, power budgets, optical bypass provisions, and physical-hardware-related characteristics. It specifies the point of interconnectability for conforming FDDI attachments. The initial PMD standard, ISO/IEC 9314-3, defines attachment to multi-mode fibre. Additional PMD sublayer standards are being developed for attachment to single-mode fibre and SONET.

   2) A Physical Layer Protocol (PHY), which provides connection between the PMD and the Data Link Layer. PHY establishes clock synchronization with the upstream code-bit data stream and decodes this incoming code-bit stream into an equivalent symbol stream for use by the higher layers. PHY provides encoding and decoding between data and control indicator symbols and code bits, medium conditioning and initializing, the synchronization of incoming and outgoing code-bit clocks, and the delineation of octet boundaries as required for the transmission of information to or from higher layers. Information to be transmitted on the medium is encoded by the PHY using a group transmission code.

b) A Data Link Layer (DLL), which is divided into two or more sublayers:

   1) An optional Hybrid Ring Control (HRC), which provides multiplexing of packet and circuit switched data on the shared FDDI medium. HRC comprises two internal components, a Hybrid Multiplexer (H-MUX) and an isochronous MAC (I-MAC). H-MUX maintains a synchronous 125 µs cycle structure and multiplexes the packet and circuit switched data streams, and I-MAC provides access to circuit switched channels.

--`,,`,,`-`-`,,`,,`,`,,`---

Copyright International Organization for Standardization
Reproduced by IHS under license with ISO
No reproduction or networking permitted without license from IHS Not for Resale

2) A Media Access Control (MAC), which provides fair and deterministic access to the medium, address recognition, and generation and verification of frame check sequences. Its primary function is the delivery of packet data, including frame generation, repetition, and removal. The definition of MAC is contained in this part of ISO/IEC 9314.

3) An optional Logical Link Control (LLC), which provides a common protocol for any required packet data adaptation services between MAC and the Network Layer. LLC is not specified by FDDI.

4) An optional Circuit Switching Multiplexer (CS-MUX), which provides a common protocol for any required circuit data adaptation services between I-MAC and the Network Layer. CS-MUX is not specified by FDDI.

c) A Station Management (SMT), which provides the control necessary at the node level to manage the processes under way in the various FDDI layers such that a node may work cooperatively on a ring. SMT provides services such as control of configuration management, fault isolation and recovery, and scheduling policies.

The MAC definition contained herein is designed to be as independent as possible from both the physical medium and the speed of operation. Concepts employed in ISO/IEC 8802-5, dealing with Token Ring MAC operation have been modified to accommodate the higher FDDI speeds, while retaining a similar set of services and facilities.

ISO/IEC 9314 specifies the interfaces, functions, and operations necessary to ensure interoperability between conforming FDDI implementations. This part of ISO/IEC 9314 provides a functional description. Conforming implementations may employ any design technique that does not violate interoperability. Implementations that conform to this part of ISO/IEC 9314 shall also be interoperable with implementations that conform to ISO 9314-2 if the additional capability of hybrid mode operation (as defined in this document) is not being used. Implementers are encouraged to consult ISO 9314-2 in addition to this part of ISO/IEC 9314.

--`,,`,,`-`-`,,`,,`,`,,`---
Copyright International Organization for Standardization
Reproduced by IHS under license with ISO
No reproduction or networking permitted without license from IHS Not for Resale

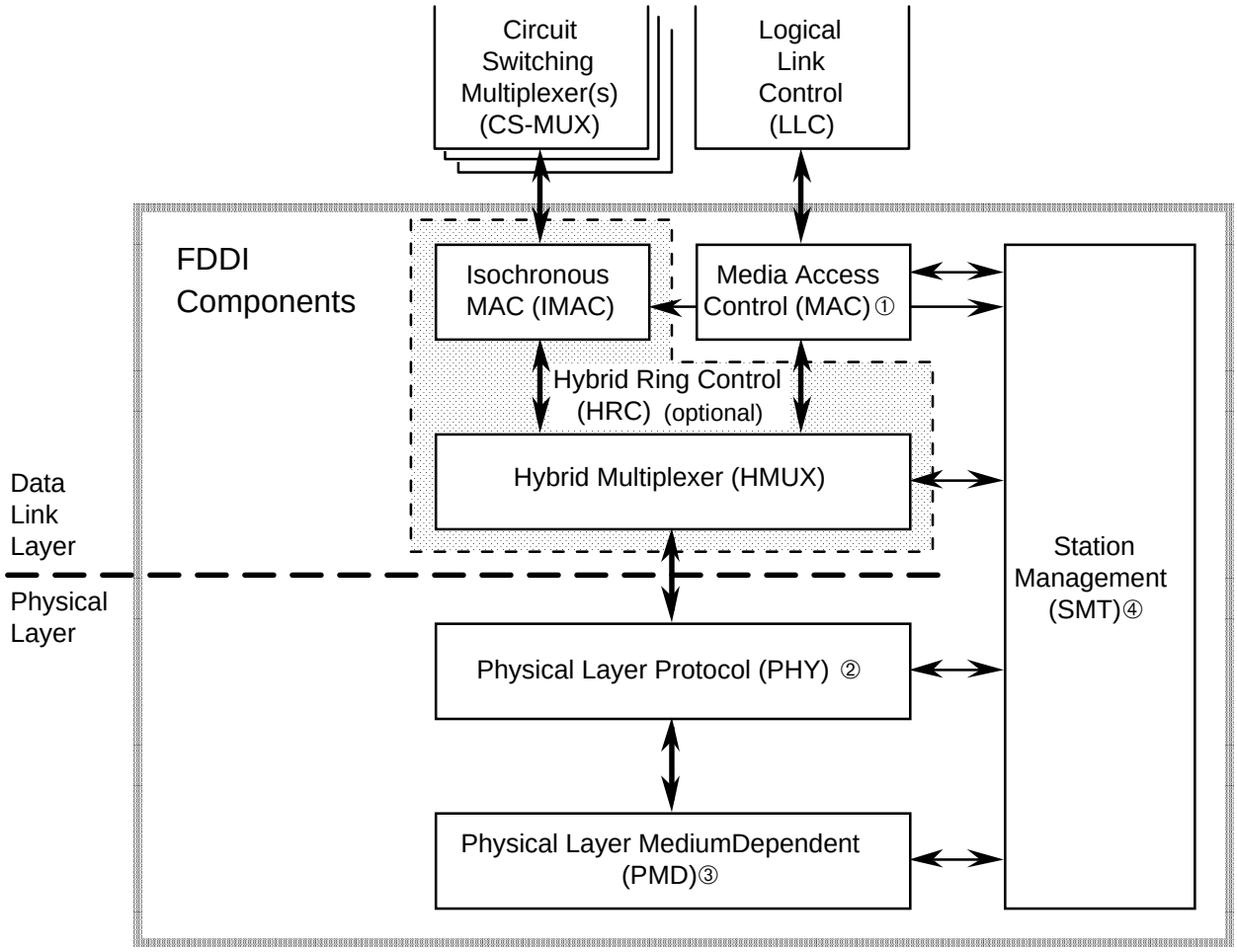

① MAC-2 with HRC; MAC or MAC-2 otherwise.

② PHY-2 with HRC; PHY or PHY-2 otherwise.

③ PMD, SMF-PMD, TP-PMD or LCF-PMD.

④ SMT-2 with HRC; SMT or SMT-2 otherwise.

Figure 1 – FDDI structure

2 Normative references

The following standards contain provisions which, through reference in this text, constitute provisions of this part of ISO/IEC 9314. At the time of publication, the editions indicated were valid. All standards are subject to revision, and parties to agreements based on this part of ISO/IEC 9314 are encouraged to investigate the possibility of applying the most recent editions of the standards listed below. Members of IEC and ISO maintain registers of currently valid International Standards.

ISO/IEC 8802-2: 1994, *Information technology - Telecommunications and information exchange between systems - Local and metropolitan area networks - Specific requirements - Part 2: Logical link control*

ISO/IEC 8802-5: 1992, *Information technology - Telecommunications and information exchange between systems - Local and metropolitan area networks - Specific requirements - Part 5: Token ring access method and physical layer specifications*

Copyright International Organization for Standardization
Reproduced by IHS under license with ISO
No reproduction or networking permitted without license from IHS
Not for Resale

ISO 9314-1: 1989, *Information processing systems - Fibre Distributed Data Interface (FDDI) - Part 1: Token Ring Physical Layer Protocol (PHY)*

ISO 9314-2: 1989, *Information processing systems - Fibre Distributed Data Interface (FDDI) - Part 2: Token Ring Media Access Control (MAC)*

ISO/IEC 9314-3: 1990, *Information processing systems – Fibre Distributed Data Interface (FDDI) – Part 3: Physical Layer Medium Dependent (PMD)*

ISO/IEC 9314-4, *Information technology – Fibre Distributed Data Interface (FDDI) – Part 4: Single Mode Fibre Physical Layer Medium Dependent (SMF-PMD)* [1)]

ISO/IEC 9314-5:1995, *Information technology - Fibre Distributed Data Interface (FDDI) - Part 5: Hybrid Ring Control (HRC)*

ISO/IEC 9314-6: *Information technology - Fibre Distributed Data Interface (FDDI) - Part 6: Station Management (SMT)*

ISO/IEC 9314-7: *Information technology - Fibre Distributed Data Interface (FDDI) - Part 7: Physical Layer Protocol (PHY-2)*

ISO/IEC 10038: 1993, *Information technology - Telecommunications and information exchange between systems - Local area networks - Media access control (MAC) bridges*

3 Definitions

For the purposes of this part of ISO/IEC 9314, the following definitions apply. In some cases these definitions may duplicate those contained in other parts of ISO/IEC 9314. Such definitions are included for completeness and to improve readability. In certain cases, definitions herein may slightly update those contained in the earlier published parts of ISO/IEC 9314 to improve their clarity.

3.1 asynchronous: A class of data transmission service whereby all requests for service contend for a pool of dynamically allocated ring bandwidth and response time.

3.2 Basic mode: The mode of ring operation where MAC PDUs (frames and tokens) are directly transmitted by PHY.

3.3 bypass: The ability of a node to optically isolate itself from the FDDI network while maintaining the continuity of the cable plant.

3.4 capture: The act of removing a token from the ring for the purpose of Frame transmission.

3.5 claim token: A process whereby one or more MACs bid for the right to initialize the ring.

3.6 counter-rotating: An arrangement whereby two signal paths in opposite directions exist in a ring topology.

3.7 cycle: A Protocol Data Unit transmitted between cooperating HRC entities on a ring, consisting of a fixed number of octets in each 125 µs interval.

[1)] To be published.

Copyright International Organization for Standardization
Reproduced by IHS under license with ISO
No reproduction or networking permitted without license from IHS Not for Resale

3.8 entity: An active service or management element within an Open System Interconnection (OSI) layer, or sublayer.

3.9 fibre optics: A technology whereby signals are transmitted over an optical waveguide medium through the use of light-generating transmitters and light-detecting receivers.

3.10 frame: A Protocol Data Unit transmitted between cooperating MAC entities on a logical ring, consisting of a variable number of octets and control symbols.

3.11 Hybrid mode: The mode of ring operation where HRC PDUs (cycles) are transmitted by PHY.

3.12 Hybrid Ring Control (HRC): The Data Link Layer entity responsible for multiplexing of packet and circuit switched data, and providing access to circuit switched channels, in an FDDI logical ring.

3.13 immediate: A class of data transmission service whereby requests for service from SMT when the ring is non-operational are performed immediately without capture of a token.

3.14 logical ring: The set of FDDI Data Link Layer entities (HRC or MAC) serially connected to form a single ring. The FDDI network topology can form two counter-rotating logical rings; however, some subsets of this topology only form a single logical ring.

3.15 Media Access Control (MAC): The Data Link Layer entity responsible for scheduling and routing packet data transmissions in an FDDI logical ring.

3.16 my long address (MLA): The 48-bit Individual Address of this MAC.

3.17 my short address (MSA): The 16-bit Individual Address of this MAC.

3.18 network (FDDI network): A collection of FDDI nodes interconnected to form a trunk, or a tree, or a trunk with multiple trees. This topology is sometimes called a dual ring of trees.

3.19 node: A collection of Physical Layer (e.g. PMD and PHY) and optional Data Link Layer (e.g. MAC and HRC) entities within an FDDI network, capable of repeating information and optionally of transmitting and receiving information, and managed by one SMT entity.

3.20 non-restricted token: A token denoting the normal mode of asynchronous bandwidth allocation, wherein the available bandwidth is shared among requesters.

3.21 null address: An address of all zeros, or an address that is either not implemented or implemented but not enabled.

3.22 octet: A data unit composed of eight ordered binary bits. An octet is represented in FDDI as a pair of data symbols.

3.23 Physical Layer Medium Dependent (PMD): The Physical Layer entity responsible for delivering a code bit stream produced by a PHY entity to the physically adjacent PHY entity, attached via fibre optics, in an FDDI network.

3.24 Physical Layer Protocol (PHY): The Physical Layer entity responsible for delivering a symbol stream produced by an upstream DLL entity (MAC or HRC) to the logically adjacent downstream DLL entity in an FDDI network.

3.25 primitive: An element of the services provided by one entity to another.

3.26 Protocol Data Unit (PDU): The unit of information transfer between communicating peer layer entities. It may contain control information, address information, data (e.g. an SDU from a higher layer entity), or any combination of the three. The FDDI MAC PDUs are tokens and frames.

--`,,`,,`-`-`,,`,,`,`,,`---

Copyright International Organization for Standardization
Reproduced by IHS under license with ISO
No reproduction or networking permitted without license from IHS Not for Resale

3.27 receive: The action of a node that consists of accepting an information stream (e.g. frame, token, cycle or control sequence) from the medium. The node receiving the information stream may examine it and selectively copy it as appropriate.

3.28 repeat: The action of a node that consists of receiving an information stream from an upstream node and reproducing it on the medium to a downstream node. The node repeating the information stream may examine it and selectively copy or modify it as appropriate.

3.29 restricted token: A token denoting a special mode of asynchronous bandwidth allocation, wherein the bandwidth available for the asynchronous class of service is dedicated to a single extended dialogue between specific requesters.

3.30 ring: A closed loop consisting of one or more stations connected by a physical medium wherein information is passed sequentially between active stations, each station in turn examining or copying and repeating the information, finally returning it to the originating station.

3.31 Service Data Unit (SDU): The unit of data transfer between a service user and a service provider.

3.32 services: A set of functions provided by one OSI layer or sublayer entity, for use by a higher layer or sublayer entity or by management entities. Data services are provided to a higher layer or sublayer entity; management services are provided to a management entity.

3.33 source routing: A method of routing frames through a bridged network in which the source station specifies within each frame the route it will traverse.

3.34 station: An addressable logical and physical node in an FDDI network, capable of transmitting, repeating and receiving information. An FDDI station has one or more PHY and PMD entities, zero or more HRC entities, one or more MAC entities, and one SMT entity.

3.35 Station Management (SMT): The supervisory entity within an FDDI node that monitors and controls the other FDDI entities in the node.

3.36 symbol: The smallest signalling element used by the Data Link Layer (DLL). The symbol set consists of 16 data symbols and 9 control symbols.

3.37 synchronous: A class of data transmission service whereby each requester is preallocated a maximum bandwidth and guaranteed a maximum access time.

3.38 token: An explicit indication of the right to transmit on a shared medium. On a token ring, the token circulates sequentially through the stations in the ring. At any time, it may be held by zero or one station. MAC uses two classes of tokens: restricted and non-restricted.

3.39 transmit: The action of a node that consists of generating an information stream (*e.g.* frame, token, cycle or control sequence) and placing it on the medium.

3.40 transparent bridging: A method of routing frames through a bridged network in which intermediate bridge stations determine the route that each frame will traverse without explicit involvement of the end stations.

--`,,`,,`-`-`,,`,,`,`,,`---

Copyright International Organization for Standardization
Reproduced by IHS under license with ISO
No reproduction or networking permitted without license from IHS Not for Resale

4 Conventions and abbreviations

4.1 Conventions

The terms SMT, MAC, HRC, PHY and PMD, when used without modifiers, refer specifically to the local FDDI entities within a node. The term LLC unless otherwise qualified refers to any local user of MAC data services, other than SMT, including those conforming to ISO 8802-2.

Low lines (*e.g.* requested_service_class) are used as a convenience to mark the name of signals, functions, etc., that might otherwise be misinterpreted as independent individual words if they were to appear in text.

The use of a period (*e.g.* MA_UNITDATA.request) is equivalent to the use of a low line except that a period is used as an aid to distinguish modifier words appended to an antecedent expression.

Subscripts or other object selectors are denoted by square brackets in text (*e.g.* aggregate object[subscript]).

Optional capabilities are distinguished from required capabilities by the use of dashed lines in drawings or curved braces in text (*e.g.* required capability { | optional capability }).

Subordinate clauses in state machine footnotes are denoted by indentation (*e.g.* matching THEN and ELSE clauses are indented one level beneath their IF clause).

Comments in state machine footnotes are denoted by double brackets (*e.g.* condition « comment »).

4.1.1 Addressing

MSA = the 16-bit Individual Address of this MAC, if implemented and enabled by SMT; otherwise MSA = Null.

MLA = the 48-bit Individual Address of this MAC, if enabled by SMT; otherwise MLA = Null.

Short_Addresses is the set of 16-bit MAC addresses including MSA if enabled, the 16-bit Broadcast Address (all ones), and any other 16-bit Group Addresses recognized by this MAC.

Long_Addresses is the set of 48-bit MAC addresses including MLA if enabled, the 48-bit Broadcast Address (all ones), and any other 48-bit Group Addresses recognized by this MAC.

When claiming the token, if the MAC transmits with 16-bit addressing, then MLA = Null; conversely, if the MAC transmits with 48-bit addressing, then MSA = Null.

A Null Address consists of all zeros in MAC PDUs. The representation of Null and/or disabled addresses within a station is not specified; however, by convention such addresses are represented as all zeros in this document.

Transparent_Bridge_Addresses is the set of 48-bit MAC addresses to be forwarded by transparent bridges.

4.1.2 Timing values and timers

All timing values, when encoded in binary form, are expressed as the unsigned twos complement of the target or remaining time in octets, i.e. the numerically greater magnitude represents the shortest time remaining. This definition is for reference purposes only and

Copyright International Organization for Standardization
Reproduced by IHS under license with ISO
No reproduction or networking permitted without license from IHS Not for Resale

does not prescribe the implementation, except where these timing values appear in Protocol Data Units on the ring. These timing values are not all used simultaneously in the state machines; consequently, the implementation need not instantiate them when they are not needed.

Timers are given a name of the form TXX where XX are two capital letters, an example is the token rotation timer TRT. By convention, all timers are assumed to be initialized with the unsigned twos complement of the target, or remaining, time in octets. Timers are further assumed to count upward if enabled, expiring when an overflow occurs. All timer comparisons are expressed on the basis of elapsed time. These conventions are for reference purposes only and do not prescribe implementation.

4.2 Abbreviations

A	Address Recognized Indicator in Frame Status field of a frame
A_Flag	Indicates Destination Address match in last received frame
A_Max	Maximum signal acquisition time
B_Flag	Indicates new restricted dialog may Begin on this token rotation
C	Frame Copied Indicator in Frame Status field of a frame
CMT	Connection Management function of Station Management
Copied_ct	Count of PDUs addressed to and copied by the MAC
C_Flag	Indicates successful copying of last received frame
DA	Destination Address field of a frame
DLL	Data Link Layer
DM_Min	Minimum duplicate MAC frame detection delay
D_Flag	Indicates that the duplicate MAC frame detection delay has transpired
D_Max	Maximum ring latency time
E	Error Detected Indicator in Frame Status field of a frame
ED	Ending Delimiter field of a MAC PDU
Error_ct	Count of reportable frame errors
E_Flag	Indicates error detected in last received frame
FC	Frame Control field of a MAC PDU
FCS	Frame Check Sequence field of a frame
FF	Frame Format bits in Frame Control field of a MAC PDU
Frame_ct	Count of all frames received
FS	Frame Status field of a frame
F_Max	Maximum frame time
HRC	Hybrid Ring Control
H_Flag	Indicates Higher Source Address received
IG	Individual/Group bit in Destination Address field of a frame
INFO	Information field of a frame

--`,,`,,`-`-`,,`,,`,`,,`---

Copyright International Organization for Standardization
Reproduced by IHS under license with ISO
No reproduction or networking permitted without license from IHS Not for Resale

I_Max	Maximum node physical insertion time
Last_FC	The Frame Control field of the last valid Frame or Token Received
Late_ct	Count of TRT expirations (token lateness)
LLC	Local Link Control
Lost_ct	Count of PDUs detected as lost
L_Flag	Indicates Lower Source Address received
L_Max	Maximum transmitter frame set-up time
MAC	Media Access Control
MLA	My Long Address
MSA	My Short Address
M_Flag	Indicates My Source Address received
M_Max	Maximum number of MAC entities allowed on the ring
Not_Copied_ct	Count of PDUs addressed to and not copied by the MAC
NSA	Next Station Addressing frame
N_Flag	Indicates No copy acknowledgment for this frame
PA	Preamble between MAC PDUs
PDU	Protocol Data Unit
PHY	Physical Layer Protocol
PMD	Physical Layer Medium Dependent
P_Flag	Indicates Purge in process
RI	Routing Information field of a frame
RII	Routing Information Indicator bit in Source Address field of a frame
RMT	Ring Management function of Station Management
R_Flag	Indicates last valid token received was restricted
SA	Source Address field of a frame
SD	Starting Delimiter field of a MAC PDU
SDU	Service Data Unit
SMT	Station Management
S_Min	Minimum safety timing allowance
THT	Token-Holding Timer
Token_ct	Count of tokens received by the MAC
Transmit_ct	Count of PDUs transmitted by the MAC
TRT	Token-Rotation Timer
TTRT	Target Token Rotation Time
TVX	Valid-Transmission Timer
TVX_value	TVX timeout value

--`,,`,,`-`-`,,`,,`,`,,`---

Copyright International Organization for Standardization
Reproduced by IHS under license with ISO
No reproduction or networking permitted without license from IHS Not for Resale

T_Bid_rc	Bidding TTRT received by this MAC in Claim Frames
T_Bid_tx	Bidding TTRT transmitted in this MAC's Claim Frames
T_Flag	Indicates that the last captured token was early
T_Init	Maximum allowed ring initialization time
T_Max	Maximum TTRT to be supported by this MAC
T_Min	Minimum TTRT to be requested by this MAC
T_Neg	Negotiated TTRT during Claim process (in receiver)
T_Opr	Operative TTRT for this MAC (in transmitter)
T_Pri	Set of n priority Token Rotation Time thresholds
T_Pri[n]	Element n of the set T_Pri
T_React	Maximum allowed time to react to a major ring fault
T_Req	Requested TTRT for this MAC's traffic
T_Resp	Maximum allowed time to recover a token

5 General description

An FDDI network consists of a set of nodes (*e.g.* stations) connected by optical transmission media into one or more logical rings. A logical ring consists of a set of stations connected as an alternating series of nodes and transmission media to form a closed loop (see figure 2). Information is transmitted sequentially, as a stream of suitably encoded symbols, from one active node to the next. Each node generally regenerates and repeats each symbol and serves as the means for attaching one or more devices to the ring for the purpose of communicating with other devices on the ring.

Two kinds of data service can be provided in a logical ring: packet service and circuit service. For packet service, a given station (the one that has access to the medium) transmits information on to the ring as a series of data packets, where each packet circulates from one station to the next. The addressed destination station(s) copies the packets as they pass. Finally, the station that transmitted the packets effectively removes them from the ring. For circuit service, some of the logical ring bandwidth is allocated to independent channels. Two or more stations can simultaneously communicate via each channel. The structure of the information stream within each channel is determined by the stations sharing that channel.

FDDI provides packet service via a token ring, wherein a station gains the right to transmit its information on to the medium when it detects a token passing on the medium. The token is a control signal comprised of a unique symbol sequence that circulates on the medium following each series of transmitted packets. Any station, upon detection of a token, may capture the token by removing it from the ring. The station may then transmit one or more data packets. After transmitting its packets, the station issues a new token, which provides other stations the opportunity to gain access to the ring.

A Token-Holding Timer, or equivalent means, limits the length of time a station may use (occupy) the medium before passing the token.

Multiple levels of priority are available for independent and dynamic assignment depending upon the relative class of service required. The classes of service may be synchronous (typically used for applications such as real-time packet voice), asynchronous (typically used

Copyright International Organization for Standardization
Reproduced by IHS under license with ISO
No reproduction or networking permitted without license from IHS Not for Resale

for interactive applications), or immediate (used for extraordinary applications such as ring recovery). The allocation of ring bandwidth occurs by mutual agreement among users of the ring.

Error detection and recovery mechanisms are provided to restore ring operation in the event that transmission errors or medium transients (e.g., those resulting from station insertion or removal) cause the access method to deviate from normal operation. Detection and recovery for these cases utilizes a recovery function that is distributed among the stations attached to the ring.

Hybrid mode is the mode of operation where both token ring operation and isochronous data transfer are multiplexed on the same medium. Hybrid mode operation requires the existence of a Hybrid Ring Control (HRC) entity. HRC passes all packet data to the packet MAC entity. HRC does not pass isochronous data to the packet MAC.

The media access method as specified herein is intended to place minimal constraints on the higher layer protocols employed to effect data transfer.

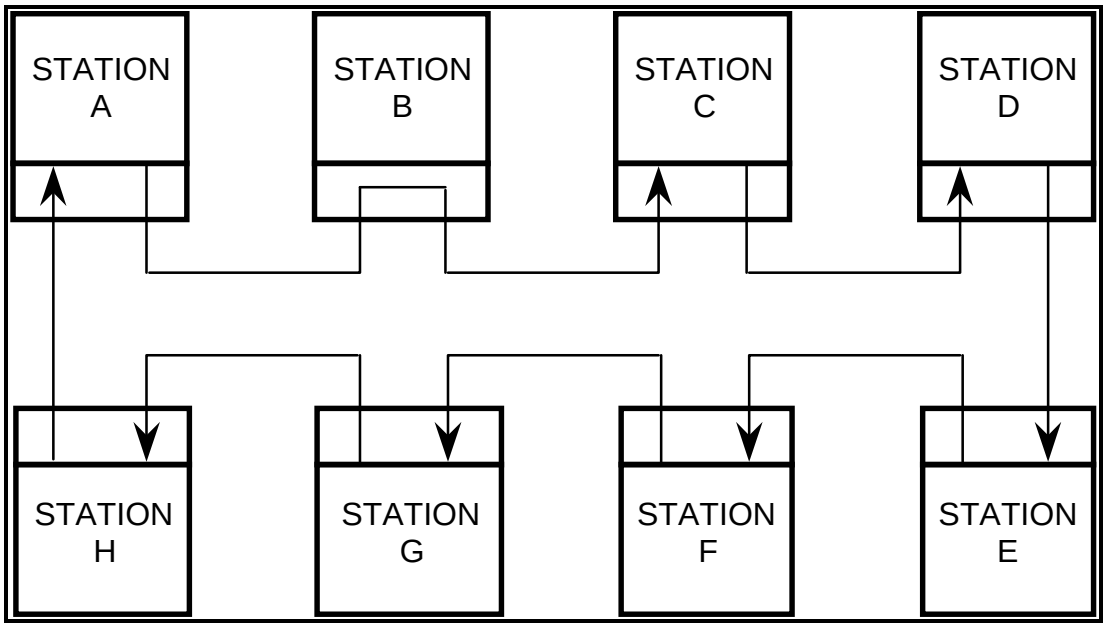

All stations are active except B (illustrated in bypass mode)

Figure 2 – Token ring logical configuration example

6 Services

This clause specifies the services provided by MAC and the services required by MAC. The following services are defined:

Copyright International Organization for Standardization
Reproduced by IHS under license with ISO
No reproduction or networking permitted without license from IHS Not for Resale

a) Data services provided by MAC to the optional local Logical Link Control (LLC) entity, or other optional MAC users, denoted by a MA_ prefix.

b) Data services required by MAC from the local PHY entity when the optional HRC function is not present, denoted by a PH_ prefix.

c) Data services required by MAC from the local H-MUX entity when the optional HRC function is present, denoted by the HM_ and HP_ prefixes.

d) Management services provided by MAC to the local SMT entity, denoted by a SM_MA_ prefix.

Some services and service primitives defined in this clause are optional; however, an implementation shall provide a set of MAC services sufficient to support correct operation of Station Management (SMT) protocols as well as any other protocol(s) being used (*e.g.* ISO 8802-2).

The definition of these services is for reference purposes only, and is not intended to specify an implementation of the MAC interfaces. Any implementation technique that causes the same external behaviour of the protocol is equally valid.

6.1 MAC-to-LLC services

This subclause specifies the services provided at the interface between the MAC and the local LLC (or other MAC user) entities, to support the exchange of PDUs among peer LLC (or other MAC users such as a MAC relay function or implementor functions) entities. These services provide delivery of submitted SDUs to individual peer entities (with individual addresses), or to multiple peer entities (with group addresses). These services may be used to exchange both LLC frames and, optionally, implementor frames.

The following primitives are defined:

MA_UNITDATA.request
MA_UNITDATA.indication
MA_UNITDATA_STATUS.indication
MA_TOKEN.request

The primitives defined in this subclause are optional.

The description of each primitive includes a description of the information that shall be passed between the MAC and the LLC (or other MAC user) entities.

6.1.1 MA_UNITDATA.request

This optional primitive defines the transfer of SDUs to MAC from a local LLC entity or other MAC users, for delivery to one or more peer entities.

6.1.1.1 Semantics of the primitive

MA_UNITDATA.request (
{ requested_token_class, }
{ requested_service_class, }
{ asynchronous_priority, }
FC_value [1],
destination_address [1],

Copyright International Organization for Standardization
Reproduced by IHS under license with ISO
No reproduction or networking permitted without license from IHS Not for Resale

```
{ source_address[1],
  { bridge_route [1], } }
M_SDU [1],
{ FCS[1], }
{ stream [1], }
{ FC_value [2],
  destination_address [2],
  { source_address[2],
    { bridge_route [2], } }
  M_SDU [2],
  { FCS[2], }
  stream [2], }
    .
    .
    .
{ FC_value [n],
  destination_address [n],
  { source_address[n],
    { bridge_route [n], } }
  M_SDU [n],
  { FCS[n], }
  stream [n], }
{ issued_token_class }
)
```

Requested_token_class may optionally be either non-restricted, restricted, or any. MACs implementing the optional restricted token capability control restricted dialogs through requested_token_class, which may require capture of either a restricted or non-restricted token to service the request.

Requested_service_class may optionally be either Synchronous or Asynchronous. If asynchronous, the asynchronous_priority level may optionally be specified.

Each set of FC_value, destination_address, bridge_route, M_SDU and stream parameters specifies one frame for transmission and is referred to as a subrequest.

The FC_value parameter supplies the Frame Control (FC) field to be transmitted as part of the frame. The Frame Format value of zero (FC.FF = 00, i.e. SMT or MAC frames) shall not be accepted with this service primitive (see 6.4.4).

The destination_address parameter may specify either an individual or a group MAC address. It shall contain sufficient information to create the DA (Destination Address) field. Address length is determined by the L bit of the associated FC_value parameter (see 7.3.3).

If the M_SDU is being forwarded by a bridge, the optional source_address parameter shall specify the individual_MAC_address of the original source MAC.

If the M_SDU is being forwarded by a bridge, the optional bridge_route parameter causes generation of a Routing Information (RI) field. It shall contain sufficient information to create the RI field. If no bridge_route parameter is supplied, then no RI field will be generated.

The M_SDU parameter specifies the Service Data Unit to be transmitted in the Information field of the frame. There shall be sufficient information associated with the M_SDU for MAC to determine the length of the service data unit.

Copyright International Organization for Standardization
Reproduced by IHS under license with ISO
No reproduction or networking permitted without license from IHS Not for Resale

If the M_SDU is being forwarded from another FDDI ring by a bridge, the optional FCS parameter shall specify the Frame Check Sequence sent by the original source MAC.

The optional stream parameter, if set, shall cause multiple M_SDUs to be transmitted as a result of the MA_UNITDATA.request. Stream, when reset, indicates that this M_SDU is the last one associated with this MA_UNITDATA.request. The frames shall be transmitted in the order presented by this primitive. If TRT (Token-Rotation Timer) has expired (Late_ct _ 0) or if a frame is encountered that cannot be transmitted because of the current value of THT (Token-Holding Timer), then transmission is terminated without altering Token_Class. A MA_UNITDATA_STATUS.indication is subsequently returned to LLC. If the transmission_status is successful, MAC may initiate transmission of the remaining frames on the next permitted access opportunity, or alternatively, MAC may require submission of a new MA_UNITDATA.request. Care must be taken when initiating or terminating restricted token mode that multiple subrequests will be serviced correctly if the token is issued before all subrequests are serviced.

Issued_token_class optionally specifies the Token_Class that MAC shall issue following transmission of the associated SDUs (i.e. at the end of the request), if no other request is pending that can be honoured. With requests for synchronous service the issued_token_class shall be the class of the token that was captured; with requests for asynchronous service it may be either restricted or nonrestricted. If no SDUs were specified by the MA_UNITDATA.request, then MAC shall immediately issue the requested class of token.

6.1.1.2 When generated

This primitive is generated by the local LLC entity whenever a MAC SDU is to be transferred to a peer LLC entity or entities, or when a token is to be issued after an MA_TOKEN.request if no SDUs are to be transferred. This may be in response to a request from higher layers of protocol or from PDUs generated internally within LLC.

6.1.1.3 Effect of receipt

The receipt of this primitive shall cause MAC to capture the next usable token based on the request parameters. MAC then enters State T2 (Transmit Data), appends all MAC-specific fields, including DA, SA (Source Address), and any fields that are unique to the medium access method, and submits the properly formed frame(s) to the lower layer local entity (PHY or H-MUX) for transfer to peer MAC entities.

6.1.2 MA_UNITDATA.indication

This optional primitive defines the transfer of SDUs from MAC to the local LLC entity or other MAC users.

6.1.2.1 Semantics of the primitive

```
MA_UNITDATA.indication          (
                                FC_value,
                                destination_address,
                                source_address,
                                { bridge_route, }
                                M_SDU,
```

--`,,`-`-`,,`,,`,`,,`---
Copyright International Organization for Standardization
Reproduced by IHS under license with ISO
No reproduction or networking permitted without license from IHS Not for Resale

{ FCS, }
reception_status
)

The FC_value parameter is the value of the Frame Control (FC) field. The Frame Format value of zero (FC.FF = 00, i.e. SMT or MAC frames) shall not be delivered with this service primitive (see 6.4.5).

The destination_address parameter may be either an individual or a group address as specified by the DA field of the incoming frame.

The source_address parameter is the individual address as specified by the SA field of the incoming frame.

The optional bridge_route parameter indicates reception of a Routing Information (RI) field. It conveys the contents of the RI field. If no RI field is received, then no bridge_route parameter is generated.

The M_SDU parameter conveys the MAC service data unit as received in the Information field of the frame.

The optional FCS parameter conveys the Frame Check Sequence as received in the FCS field of the frame.

The reception_status parameter indicates the success or failure of the incoming frame. It consists of the following elements:

a) Frame validity: FR_GOOD or optionally FR_BAD

   If FR_BAD is reported, the reason for the error shall also be reported. The reason shall be one of the following:

   1) **Invalid FCS:** Calculated Frame Check Sequence (FCS) does not match the received FCS.

   2) **Length Error:** The frame did not have a valid data length.

   3) **Internal Error:** An internal error has occurred that prevents MAC from transferring to LLC a frame that has been acknowledged by the setting of the C (frame copied) indicator.

   4) **E Indicator Error:** The error detected indicator for the frame was not received as reset (R) (i.e. either set (S) or missing).

b) Frame Status: The received E (error detected), A, C, and, optionally, any other Indicator values. The reported status for each individual indicator shall include received as set (S), received as reset (R), or not received as set or reset.

6.1.2.2 When generated

The MA_UNITDATA.indication primitive shall be generated by MAC to indicate to the local LLC entity the receipt of a valid LLC or Implementor frame addressed to this entity. This primitive shall (optionally) be generated to indicate receipt of an invalid LLC or Implementor frame addressed to this entity when the optional indicate on bad frames function has been selected (see 6.4.2.3).

--`,,`,,`-`-`,,`,,`,`,,`---

Copyright International Organization for Standardization
Reproduced by IHS under license with ISO
No reproduction or networking permitted without license from IHS Not for Resale

6.1.2.3 Effect of receipt

The effect of receipt of this primitive by the LLC entity is not specified.

6.1.3 MA_UNITDATA_STATUS.indication

This optional primitive defines the response to an MA_UNITDATA.request primitive signifying the success or failure of the request.

6.1.3.1 Semantics of the primitive

```
MA_UNITDATA_STATUS.indication    (
                                 number_of_SDUs,
                                 transmission_status,
                                 )
```

The number_of_SDUs parameter reports the number of M_SDUs transmitted on a given access opportunity as a result of this request.

The transmission_status parameter shall be used to pass information back to the local requesting LLC entity. It shall be used to indicate the success or failure of a previous associated MA_UNITDATA.request. The relationship between requests and status indications is implementor defined; and an implementation may provide a single status indication for a request, or an indication for one or more subrequests if the MA_UNITDATA.request primitive specified more than one M_SDU.

6.1.3.2 When generated

This primitive shall be generated by MAC in response to an MA_UNITDATA.request primitive from the local LLC entity.

6.1.3.3 Effect of receipt

The effect of receipt of this primitive by LLC is unspecified.

NOTE - In the event of multiple outstanding requests, additional information may be needed in order for LLC to associate the response with the appropriate request. The association may be implied by the requests being serviced in a first-in-first-out (FIFO) manner. Alternatively, MAC may maintain multiple queues of requests, at least one for each class_of_service implemented, servicing each of these queues in a FIFO manner. It is assumed that if the addressed peer MAC entity, or entities, acknowledge receipt of the frame(s) (by setting the C indicator), then either the frame(s) will be delivered, or an internal error should be reported, to the corresponding LLC entity, or entities, via an MA_UNITDATA.indication.

6.1.4 MA_TOKEN.request

This optional primitive is used by LLC to request the capture of the next usable token.

6.1.4.1 Semantics of the primitive

```
MA_TOKEN.request                 (
                                 requested_token_class,
```

--`,,`,,`-`-`,,`,,`,`,,`---
Copyright International Organization for Standardization
Reproduced by IHS under license with ISO
No reproduction or networking permitted without license from IHS Not for Resale

{ requested_service_class, }
{ asynchronous_priority }
)

Requested_token_class may be either non-restricted, restricted, or any. MACs implementing the optional restricted token capability control restricted dialogs through requested_token_class, which may require capture of either a restricted or non-restricted token to service the request.

Requested_service_class may optionally be either Synchronous or Asynchronous. If asynchronous, the asynchronous_priority level may optionally be specified.

6.1.4.2 When generated

This primitive may be generated by the local LLC entity when data of a time critical nature is to be transferred, or to control a restricted dialog.

6.1.4.3 Effect of receipt

The receipt of this primitive shall cause MAC to capture the next usable token based on the request parameters. MAC then enters State T2 (Transmit Data) and transmits Idle symbols (and void frames if required by L_max) until an MA_UNITDATA.request primitive is received from LLC unless TRT (or THT, for asynchronous requests) expires first, in which case MAC shall issue another token of the same Token_class as was captured.

NOTE - This primitive may be used for time critical operations to minimize the effects of ring latency. This mode of operation may cause longer than usual preambles preceding a frame, thus wasting ring bandwidth; therefore it should not be used for transfers of data on the FDDI ring that are not time critical.

6.2 MAC-to-PHY services

This subclause specifies the services provided at the interface between the MAC and the PHY entities to support the exchange of PDUs among peer MAC entities. Additional detail is provided in ISO 9314-1 and ISO/IEC 9314-7 concerning conditions that generate these primitives and PHY actions upon receipt of MAC generated primitives.

The following primitives are defined:

PH_UNITDATA.request
PH_UNITDATA.indication
PH_INVALID.indication

All primitives defined in this subclause are mandatory when the optional HRC function is not present. When the optional HRC function is present, these primitives are replaced by the MAC-to-H-MUX primitives defined in 6.3.

The description of each primitive includes a description of the information that is passed between the MAC and PHY entities.

These services shall be ‘synchronous’, so that each PH_UNITDATA.indication causes exactly one PH_UNITDATA.request. Depending upon the current internal configuration of the station, the PH_UNITDATA.request may be returned to the same PHY or to a different PHY.

To ensure correct operation of the Elasticity Buffer function defined in the FDDI PHY (see ISO 9314-1 and ISO/IEC 9314-7), the maximum MAC PDU length shall not exceed 9 000 symbols, including the Starting Delimiter through the fourth preamble (Idle) symbol after the PDU.

Copyright International Organization for Standardization
Reproduced by IHS under license with ISO
No reproduction or networking permitted without license from IHS Not for Resale

6.2.1 PH_UNITDATA.request

This primitive transfers the symbol data stream from MAC to PHY.

6.2.1.1 Semantics of the primitive

PH_UNITDATA.request (
PH_Request(symbol)
)

The symbol specified by PH_Request (symbol) shall be one of the following:

I, J, K, n, R, S or T, from the set of symbols defined in the FDDI PHY (see ISO 9314-1 and ISO/IEC 9314-7).

6.2.1.2 When generated

MAC shall generate one PH_UNITDATA.request for each PH_UNITDATA.indication received from PHY.

6.2.1.3 Effect of receipt

The effect of receipt of this primitive by PHY is not specified.

6.2.2 PH_UNITDATA.indication

This primitive transfers the symbol data stream to MAC from PHY.

6.2.2.1 Semantics of the primitive

PH_UNITDATA.indication (
PH_Indication(symbol)
)

The symbol specified by PH_Indication (symbol) shall be one of the following:

H, I, J, K, n, R, S, T and optionally L, Q or V, from the set of symbols defined in the FDDI standard on PHY (see ISO 9314-1 and ISO/IEC 9314-7).

6.2.2.2 When generated

PHY shall generate a PH_UNITDATA.indication for each decoded symbol received from PMD. This indication shall be generated once every symbol period.

6.2.2.3 Effect of receipt

Upon receipt of this primitive, MAC shall accept a symbol from PHY, process it, and generate a corresponding PH_UNITDATA.request to PHY, conveying the resulting output symbol.

6.2.3 PH_INVALID.indication

This primitive indicates to MAC that continuity of the received symbol stream has been compromised.

Copyright International Organization for Standardization
Reproduced by IHS under license with ISO
No reproduction or networking permitted without license from IHS Not for Resale

6.2.3.1 Semantics of the primitive

PH_INVALID.indication (
PH_Invalid
)

The PH_Invalid parameter shall indicate that the PH_UNITDATA.indication symbol stream is invalid.

6.2.3.2 When generated

PHY shall generate this primitive whenever it detects a Quiet, Halt, Master, or Noise Line State, or other interruptions of the received symbol stream as specified in the FDDI standard on PHY (see ISO 9314-1 and ISO/IEC 9314-7).

6.2.3.3 Effect of receipt

Receipt of this primitive by MAC shall cause the MAC receiver to enter State R0, and to abort the processing of any PDU currently being received.

6.3 MAC-to-H-MUX Services

This subclause specifies the services provided at the interface between the MAC and the optional H-MUX entities to support the exchange of PDUs among peer MAC entities. The FDDI standard on HRC (see ISO/IEC 9314-5) defines two types of MAC entities, I-MAC and P-MAC. The P-MAC is the MAC specified in this standard, with the optional capabilities to support Hybrid mode implemented. Additional detail is provided in HRC concerning conditions that generate these primitives and H-MUX actions upon receipt of MAC generated primitives.

The following primitives are defined:

HM_MODE.indication
HP_UNITDATA.request
HP_UNITDATA.indication
HP_INVALID.indication
HP_MODE.request

All primitives defined in this subclause are mandatory when the optional HRC function is present. When the optional HRC function is not present, these primitives are replaced by the MAC-to-PHY primitives defined in MAC-to-PHY services (see 6.2).

The description of each primitive includes a description of the information that is passed between the MAC and H-MUX entities.

These services shall be ‘synchronous’, so that each HP_UNITDATA.indication causes exactly one HP_UNITDATA.request.

6.3.1 HM_MODE.indication

The function of this primitive is to provide information on the current mode of operation of H-MUX to the local MAC entity.

Copyright International Organization for Standardization
Reproduced by IHS under license with ISO
No reproduction or networking permitted without license from IHS Not for Resale

6.3.1.1 Semantics of the Primitive:

HM_MODE.indication (
HM_mode(mode)
)

The HM_mode parameter shall be set to ‘basic’ during Basic mode operation, ‘slave’ during Hybrid mode operation whenever the H-MUX Cycle Control state machine is in the SLAVE or STANDBY states, and ‘master’ during Hybrid mode operation whenever the H-MUX Cycle Control state machine is in the RESYNCH or MASTER states.

6.3.1.2 When Generated:

H-MUX continuously sends an indication of its mode to the local MAC entities.

6.3.1.3 Effect of Receipt:

The effect of receipt of this primitive by MAC is specified in the MAC state machines. This primitive alters the behaviour of the MAC recovery conditions and actions.

6.3.2 HP_UNITDATA.request

This primitive transfers the symbol data stream from MAC to H-MUX.

6.3.2.1 Semantics of the primitive

HP_UNITDATA.request (
HP_Request(symbol)
)

The symbol specified by HP_Request (symbol) shall be one of the following:

I, J, K, L, n, R, S or T, from the set of symbols defined in the FDDI standard on PHY (see ISO 9314-1 and ISO/IEC 9314-7).

6.3.2.2 When generated

MAC shall generate one HP_UNITDATA.request for each HP_UNITDATA.indication received from H-MUX.

6.3.2.3 Effect of receipt

The effect of receipt of this primitive by H-MUX is not specified.

6.3.3 HP_UNITDATA.indication

This primitive transfers the symbol data stream to MAC from H-MUX.

Copyright International Organization for Standardization
Reproduced by IHS under license with ISO
No reproduction or networking permitted without license from IHS Not for Resale

6.3.3.1 Semantics of the primitive

HP_UNITDATA.indication (
HP_Indication(symbol)
)

The symbol specified by HP_Indication (symbol) shall be one of the following:

H, I, J, K, L, n, R, S, T and optionally Q or V, from the set of symbols defined in the FDDI standard on PHY (see ISO 9314-1 and ISO/IEC 9314-7).

6.3.3.2 When generated

H-MUX shall generate a HP_UNITDATA.indication for each symbol received from PHY in Basic mode, and for each Packet Data Channel symbol in Hybrid mode. This indication shall be generated once every symbol period in Basic mode. Since the Packet Data Channel is byte interleaved with other information in Hybrid mode, MAC shall be capable of processing intermittent pairs of indications in Hybrid mode.

6.3.3.3 Effect of receipt

Upon receipt of this primitive, MAC shall accept a symbol from H-MUX, process it, and generate a corresponding HP_UNITDATA.request to H-MUX, conveying the resulting output symbol.

6.3.4 HP_INVALID.indication

This primitive indicates to MAC that continuity of the received symbol stream has been compromised.

6.3.4.1 Semantics of the primitive

HP_INVALID.indication (
HP_Invalid
)

The HP_Invalid parameter shall indicate that the HP_UNITDATA.indication symbol stream is invalid.

6.3.4.2 When generated

H-MUX shall generate this primitive whenever it does not have a valid symbol stream to present to MAC.

6.3.4.3 Effect of receipt

Receipt of this primitive by MAC shall cause the MAC receiver to enter State R0, and to abort the processing of any PDU currently being received.

6.3.5 HP_MODE.request

The function of this primitive is to allow the MAC to force basic mode for the transmission of MAC recovery frames (*e.g.* Claim and Beacon).

Copyright International Organization for Standardization
Reproduced by IHS under license with ISO
No reproduction or networking permitted without license from IHS Not for Resale

6.3.5.1 Semantics of the Primitive:

HP_MODE.request (
HP_mode(mode)
)

The HP_mode parameter shall be set to ‘any’ to allow normal Hybrid operation, and to ‘basic’ to force basic mode operation during the transmission of MAC recovery frames.

6.3.5.2 When Generated:

MAC continuously sends an indication of its mode to the local H-MUX entity. MAC shall allow normal H-MUX operation except during transmission of MAC frames during ring recovery. MAC shall assert HP_mode(any) except during Transmitter states T4 and T5. In state T4, the Claim actions specify the setting of HP_mode. MAC shall assert HP_mode(basic) in state T5.

6.3.5.3 Effect of Receipt:

When HP_mode(any) is asserted the H-MUX is free to transmit cycles in the normal manner. When the HP_mode(basic) is asserted the H-MUX shall transmit MAC SDUs in Basic mode.

6.4 MAC-to-SMT services

This subclause specifies the services provided at the interface between the MAC and the Station Management (SMT) entities. The services supplied by the MAC allow the local SMT entity to monitor and control the operation of MAC. The MAC-to-SMT services shall have precedence over the MAC-to-LLC services. Additional detail is provided in ISO/IEC 9314-6 concerning conditions that generate these primitives and SMT actions upon receipt of MAC-generated primitives.

The following primitives are defined:

SM_MA_INITIALIZE_PROTOCOL.request
SM_MA_CONTROL.request
SM_MA_STATUS.indication
SM_MA_UNITDATA.request
SM_MA_UNITDATA.indication
SM_MA_UNITDATA_STATUS.indication
SM_MA_TOKEN.request

All primitives defined in this subclause are mandatory, except the SM_MA_UNITDATA_STATUS.indication and SM_MA_TOKEN.request primitives, which are optional.

The description of each primitive includes a description of the information that is passed between the MAC and the SMT entities.

6.4.1 SM_MA_INITIALIZE_PROTOCOL.request

This primitive is used by SMT to change operational parameters of MAC. The implementation of this primitive shall allow for modification of single parameters. It is not required to change these parameters while MAC is operational in the ring; however, the implementation should minimize disruption of the ring during a parameter change.

Copyright International Organization for Standardization
Reproduced by IHS under license with ISO
No reproduction or networking permitted without license from IHS Not for Resale

6.4.1.1 Semantics of the primitive

```
SM_MA_INITIALIZE_PROTOCOL.request    (
                                     my_long_address,
                                     { my_short_address, }
                                     group_MAC_addresses,
                                     { T_Min_value, }
                                     { T_Max_value, }
                                     DM_Min_value,
                                     { TVX_value, }
                                     T_Req_value,
                                     { T_Neg_value, }
                                     T_Pri_value,
                                     )
```

The my_long_address and optional my_short_address parameters are the octet strings that MAC shall use as its individual addresses. Both a long (48-bit) and a short (16-bit) address may be supplied. Full MAC function on an FDDI network requires a non-Null my_long_address. Support of my_short_address is optional.

Each group_MAC_address is an octet string that MAC shall use as a group address. Support for the broadcast address and for independent enabling or disabling of each of the 16 possible SMT group addresses is mandatory. Support for enabling of other group addresses is optional.

> NOTE - A group_MAC_address value should only be supplied when the higher-layer protocol entity intended to be accessed via that address is supported by the implementation

T_Min_value specifies the minimum Target Token Rotation Time (TTRT). Support of T_Min_value is optional.

T_Max_value specifies the maximum Target Token Rotation Time (TTRT). Support of T_Max_value is optional.

DM_Min_value specifies the minimum duplicate MAC frame detection delay.

TVX_value specifies the Valid-Transmission Timer (TVX) expiration value. Support of TVX_value is optional.

T_Req_value specifies the requested TTRT.

T_Neg_value specifies the negotiated TTRT. Direct initialization of this parameter through this primitive is optional since it is normally set through the Claim or Purge process.

T_Pri_value specifies an optional set of priority Token Rotation Time thresholds.

6.4.1.2 When generated

This primitive is generated by SMT whenever it requires MAC to initialize or modify operational parameters.

6.4.1.3 Effect of receipt

Receipt of this primitive shall cause MAC to establish the values of its addresses, and other operational parameters. Prior to any SM_MA_INITIALIZE_PROTOCOL.request primitive, all parameters shall assume their default values, and my_long_address and my_short_address shall both be disabled.

Copyright International Organization for Standardization
Reproduced by IHS under license with ISO
No reproduction or networking permitted without license from IHS Not for Resale

6.4.2 SM_MA_CONTROL.request

This primitive has local significance and is used by SMT to control the operation of MAC. The implementation of this primitive shall allow for modification of individual control actions listed below.

6.4.2.1 Semantics of the primitive

```
SM_MA_CONTROL.request        (
                             control_action,
                             mac_frame_information,
                             requested_status
                             )
```

The control_action parameter values shall include: send_mac_frames, reset_mac, control_MAC_recovery, reset_frame_counters, present_status, control_MA_UNITDATA_request, and optionally control_MA_UNITDATA_indication.

The control action send_mac_frames shall include Beacon and Claim. The mac_frame_information parameter shall specify the DA field and the Information field for use when transmitting Beacon frames, or the Information field for use when transmitting Claim frames. An implementation shall be capable of accepting a mac_frame_information parameter specifying at least 64 octets of Information field for continuous transmission in Transmitter State T4 (Claim Token, see 8.4.5) or State T5 (Transmit Beacon, see 8.4.6).

> WARNING - To assure stable MAC protocol behaviour, the maximum length of the MAC frames (including preamble) continuously transmitted in States T4 and T5 should be significantly less than T_Max / (N x M_Max). For more information, see annex D.

The control action reset_mac specifies reset of the MAC state machines.

The control action control_MAC_recovery shall specify full or partial recovery functions in the Transmitter.

The control action reset_frame_counters shall include the MAC counters Frame_ct, Error_ct, Lost_ct, and (if implemented) Copied_ct, Transmit_ct, Not_Copied_ct and Token_ct.

The control action present_status shall cause generation of a SM_MA_STATUS.indication that includes the requested_status.

The control action control_MA_UNITDATA.request shall specify enable or disable of: all requests, synchronous requests, and restricted requests.

The control action control_MA_UNITDATA.indication may optionally be implemented to enhance the frame copy capability of a MAC. Options may include indicate on all frames, indicate on own frame, indicate on all group addresses, or no indicate on secondary NSA.

6.4.2.2 When generated

This primitive is generated by SMT to cause MAC to take the specified control action.

6.4.2.3 Effect of receipt

Receipt of this primitive by MAC shall cause it to take the following actions:

a) If the control action is reset_mac, then MAC shall

Copyright International Organization for Standardization
Reproduced by IHS under license with ISO
No reproduction or networking permitted without license from IHS Not for Resale

1) Generate the MAC_Reset signal.

2) Enter Receiver State R0 (Listen).

3) Enter Transmitter State T0 (Transmit Idle).

b) If the control action is send_mac_frames (beacon), then MAC shall reset the Transmitter state machine and enter State T5 (Transmit Beacon). The Late_Ct and the D_Flag are not reset. The Beacon Frames shall be transmitted with the DA field, the first octet of the Information field (Beacon Type), and any octets after the fourth octet of the Information field specified by the mac_frame_information parameter.

c) If the control action is send_mac_frames (claim), then MAC shall reset the Transmitter state machine and enter State T4 (Claim Token). The Late_Ct and the D_Flag are not reset. The Claim Frames shall be transmitted with any octets after the fourth octet of the Information field specified by the mac_frame_information parameter.

d) If the control action parameter is control_MAC_recovery and the request specifies:

1) enable full recovery, then the Transmitter shall perform all token and ring recovery functions;

2) enable partial recovery, then the Transmitter shall ignore token and ring recovery signals from the Receiver, i.e. signals generated by the Receiver upon receipt of a valid Token or MAC frame, and TVX expired. This permits transmission of MAC or SMT PDUs without interference from upstream stations. Received frames may optionally be repeated when the Transmitter is idle; however, received tokens shall be stripped.

e) If the control action parameter is reset_frame_counters, then MAC shall reset all indicated counters.

f) If the control_action is present_status, then MAC shall generate an SM_MA_STATUS.indication to SMT that includes the status indicated by the requested_status parameter.

g) If the control action is control_MA_UNITDATA.request and the request specifies:

1) enable all requests, then MAC shall transmit all valid MA_UNITDATA.requests presented to it;

2) disable all requests, then MAC shall not transmit any MA_UNITDATA.requests presented to it;

3) enable synchronous requests, then MAC shall transmit all valid MA_UNITDATA.requests with requested_service_class of synchronous presented to it. Support of this function is required if the optional synchronous transmission capability is supported;

4) disable synchronous requests, then MAC shall not transmit any MA_UNITDATA.requests with requested_service_class of synchronous presented to it;

5) enable restricted requests, then MAC shall transmit all valid MA_UNITDATA.requests with requested_token_class or issued_token_class of restricted presented to it. Support of this function is required if the optional restricted token mode transmission capability is supported;

Copyright International Organization for Standardization
Reproduced by IHS under license with ISO
No reproduction or networking permitted without license from IHS Not for Resale

6) disable restricted requests, then MAC shall not transmit any MA_UNITDATA.requests with requested_token_class or issued_token_class of restricted presented to it.

This control action does not affect operation of the SM_MA_UNITDATA.request service.

h) If the control action is control_MA_UNITDATA.indication (optional) and the request specifies:

1) Indicate on all frames shall cause the MAC to promiscuously copy and generate an (SM_)MA_UNITDATA.indication on all frames independent of matching the Destination Address.

2) Indicate on all group addresses shall cause the MAC to copy and generate an (SM_)MA_UNITDATA.indication on all frames independent of matching the Destination Address if the Destination Address is a group address.

Indicate on all frames or indicate on all group addresses shall not expand the set of addresses included in Short_Addresses or Long_Addresses. Therefore, the A indicator shall only be set by a MAC if the DA of a frame is explicitly included in the set of Short_Addresses or Long_Addresses supplied via the SM_MA_INITIALIZE_PROTOCOL.request.

3) No indicate on own frame shall prevent the copy and generation of an (SM_)MA_UNITDATA.indication on frames with the Source Address equal to the MAC's individual address.

4) No indicate on secondary NSA shall prevent the copy and generation of an SM_MA_UNITDATA.indication on frames where the FC field indicates an SMT Next Station Addressing frame and the A indicator is received as S.

5) No indicate on duplicate MAC shall prevent the copy and generation of an SM_MA_UNITDATA.indication on frames where the FC field indicates a MAC frame and no difference was detected from the previous copied MAC frame with the same FC value before the fifth octet of the Information field.

6) No indicate on MAC frames shall prevent the copy and generation of an SM_MA_UNITDATA.indication on frames where the FC field indicates a MAC frame.

7) Indicate on bad frames shall cause the MAC to generate an (SM_)MA_UNITDATA.indication on all frames that would otherwise be copied, but that fail the frame validity criteria (see 8.3.1). If this function is not selected, then invalid frames are ignored.

6.4.3 SM_MA_STATUS.indication

This primitive is used by MAC to inform the local SMT entity of requested current status, or errors and significant status changes detected by MAC.

6.4.3.1 Semantics of the primitive

```
SM_MA_STATUS.indication          (
                                 Status_report
                                 )
```

The status_report parameter shall specify appropriate status including the following:

a) Any change of Ring_Operational status.

Copyright International Organization for Standardization
Reproduced by IHS under license with ISO
No reproduction or networking permitted without license from IHS Not for Resale

b) Receipt of a MAC frame with distinct reporting of: My_Claim, Higher_Claim, Lower_Claim, My_Purge, Other_Purge, My_Beacon, Other_Beacon or any other MAC frame that satisfies the frame validity criteria. The report shall include at a minimum, the first four bytes of the information field.

c) Expiration of TVX (optional).

d) Expiration of TRT and Late_ct not $\neq 0$ (optional).

e) Receipt of PH_Invalid when the Receiver was not in State R0 (optional).

f) Overflow of a counter, (*e.g.* Error_ct) (optional).

g) Increment of a counter, (*e.g.* Error_ct) (optional).

h) Receipt of a valid frame with the Destination Address equal to this MAC's individual address and the received A Indicator set (optional).

i) Receipt of any valid MAC frame (MAC_Frame) with SA = (MSA or MLA) (M_Flag set), and:

   1) Ring_Operational is set; or

   2) Token_Class $\neq$ none and the frame was not My_Claim or My_Purge (if Purge is implemented); or

   3) The Duplicate Detection Delay flag (D_Flag) is set; and

      a) The Transmitter is not in State T2 (Transmit Data); and

      b) The Transmitter is not in State T4 (Claim Token) or the frame was not My_Claim or My_Purge (if Purge is implemented); and

      c) The Transmitter is not in State T5 (Transmit Beacon) or the frame was not My_Beacon.

j) Recognition that this MAC's transmitted frame was lost in the course of its circulation around the ring (optional).

k) Any change in R_Flag (optional if another mechanism is provided for restricted mode monitoring).

l) Receipt of a valid frame that was unsuccessfully copied (i.e., copy frame and not E_Flag and not C_Flag and not N_Flag) (optional).

m) Receipt of a token if the MAC Transmitter is in State T2 (Transmit Data) or T3 (Issue Token) (optional).

n) Expiration of TRT whilst in MAC Transmitter State T4 (Claim Token) or T5 (Transmit Beacon) (optional).

o) Entry to Transmitter State T4 (Claim Token).

p) Entry to Transmitter State T5 (Transmit Beacon).

q) The current value of a requested operational parameter including: T_max, TVX_value, T_req, T_neg, T_pri.

r) The current state of MAC including: Transmitter state (optional), Receiver state (optional), R_Flag, Ring_Operational, Last_FC (optional), and Late_ct.

s) The set of addresses recognized by the MAC.

t) The current value of a MAC frame counter (e.g., Error_ct).

Copyright International Organization for Standardization
Reproduced by IHS under license with ISO
No reproduction or networking permitted without license from IHS Not for Resale

6.4.3.2 When generated

This primitive shall be generated by MAC when any of the listed reportable conditions are detected.(items a through p above), or in response to an SM_MA_CONTROL.request(present_status).

6.4.3.3 Effect of receipt

The effect of receipt of this primitive by SMT is not specified.

6.4.4 SM_MA_UNITDATA.request

This primitive defines the transfer of SDUs to MAC from the local SMT entity, for delivery to one or more peer SMT entities.

6.4.4.1 Semantics of the primitive

```
SM_MA_UNITDATA.request          (
                                requested_token_class,
                                requested_service_class,
                                { asynchronous_priority, }
                                FC_value [1],
                                destination_address [1],
                                M_SDU [1],
                                { stream [1], }
                                { FC_value [2],
                                  destination_address [2],
                                  M_SDU [2],
                                  stream [2], }
                                    .
                                    .
                                    .
                                { FC_value [n],
                                  destination_address [n],
                                  M_SDU [n],
                                  stream [n], }
                                { issued_token_class }
                                )
```

Requested_token_class may be either non-restricted, restricted, any or none. MACs implementing the optional restricted token capability control restricted dialogs through requested_token_class, which may require capture of either a restricted or non-restricted token to service the request. If the requested_service_class is Immediate, then the requested_token_class shall be none.

Requested_service_class may be either Synchronous (optional), Asynchronous, or Immediate. If asynchronous, the asynchronous_priority level may optionally be specified. Immediate, if specified, shall cause the frame to be sent immediately without capture of a token, if the ring is not operational.

Each set of FC_value, destination_address, M_SDU and stream parameters specifies one frame for transmission and is referred to as a subrequest.

Copyright International Organization for Standardization
Reproduced by IHS under license with ISO
No reproduction or networking permitted without license from IHS Not for Resale

The FC_value parameter supplies the Frame Control (FC) field to be transmitted as part of the frame. The Frame Format value of zero (FC.FF = 00, i.e. SMT or MAC frames) shall be accepted with this service primitive (see 6.1.1).

The destination_address parameter may specify either an individual or a group MAC address. It shall contain sufficient information to create the DA (Destination Address) field. Address length is determined by the L bit of the associated FC_value parameter (see 7.3.3).

The M_SDU parameter specifies the Service Data Unit to be transmitted in the Information field of the frame. There shall be sufficient information associated with the M_SDU for MAC to determine the length of the service data unit.

The optional stream parameter, if set, shall cause multiple M_SDUs to be transmitted as a result of the SM_MA_UNITDATA.request. Stream, when reset, indicates that this M_SDU is the last one associated with this SM_MA_UNITDATA.request. The frames shall be transmitted in the order presented by this primitive. If TRT (Token-Rotation Timer) has expired (Late_ct not= 0) or if a frame is encountered that cannot be transmitted because of the current value of THT (Token-Holding Timer), then transmission is terminated without altering Token_Class. A SM_MA_UNITDATA_STATUS.indication is subsequently returned to SMT. If the transmission_status is successful, MAC may initiate transmission of the remaining frames on the next permitted access opportunity or, alternatively, MAC may require reissuance of a new SM_MA_UNITDATA.request. Care must be taken when initiating or terminating restricted token mode that multiple subrequests will be serviced correctly if the token is issued before all subrequests are serviced.

Issued_token_class optionally specifies the Token_Class that MAC shall issue following transmission of the associated SDUs (i.e. at the end of the request), if no other request is pending that can be honoured. With requests for synchronous service the Issued_token_class shall be the class of the token that was captured; with requests for asynchronous service it may be either restricted or non-restricted; with requests for immediate service, it shall be none. If no SDUs were specified by the SM_MA_UNITDATA.request, then MAC shall immediately issue the requested class of token.

6.4.4.2 When generated

This primitive is generated by the local SMT entity whenever a MAC SDU is to be transferred to a peer SMT entity or entities, when a token is to be issued after an MA_TOKEN.request if no SDUs are to be transferred, or when a token is to be generated and the ring is not operational.

6.4.4.3 Effect of receipt

The receipt of this primitive shall cause MAC to capture the next usable token based on the request parameters (or wait for not Ring_Operational for immediate requests). MAC then enters State T2 (Transmit Data), appends all MAC-specific fields, including DA, SA (Source Address), and any fields that are unique to the medium access method, and submits the properly formed frame(s) to the lower layer local entity (PHY or H-MUX) for transfer to peer MAC entities.

6.4.5 SM_MA_UNITDATA.indication

This primitive defines the transfer of SDUs from MAC to the local SMT entity.

--`,,`,,`-`-`,,`,,`,`,,`---

Copyright International Organization for Standardization
Reproduced by IHS under license with ISO
No reproduction or networking permitted without license from IHS Not for Resale

6.4.5.1 Semantics of the primitive

SM_MA_UNITDATA.indication (
FC_value,
destination_address,
source_address,
M_SDU,
reception_status
)

The FC_value parameter is the value of the Frame Control (FC) field. The Frame Format value of zero (FC.FF = 00, i.e. SMT or MAC frames) shall be delivered with this service primitive (see 6.1.2).

The destination_address parameter may be either an individual or a group address as specified by the DA field of the incoming frame.

The source_address parameter is the individual address as specified by the SA field of the incoming frame.

The M_SDU parameter conveys the MAC service data unit as received in the Information field of the frame.

The reception_status parameter indicates the success or failure of the incoming frame. It consists of the following elements:

a) Frame validity: FR_GOOD or optionally FR_BAD

   If FR_BAD is reported, the reason for the error shall also be reported. The reason shall be one of the following:

   1) **Invalid FCS:** Calculated Frame Check Sequence (FCS) does not match the received FCS.

   2) **Length Error:** The frame did not have a valid data length.

   3) **Internal Error:** An internal error has occurred that prevents MAC from transferring to SMT a frame that has been acknowledged by the setting of the C (frame copied) indicator.

   4) **E Indicator Error:** The error detected indicator for the frame was not received as reset (R) (i.e. either set (S) or missing).

b) Frame Status: The received E (error detected), A, C, and, optionally, any other Indicator values. The reported status for each individual indicator shall include received as set (S), received as reset (R), or not received as set or reset.

6.4.5.2 When generated

The SM_MA_UNITDATA.indication primitive shall be generated by MAC to indicate to the local SMT entity the receipt of a valid MAC or SMT frame addressed to this entity. This primitive shall (optionally) be generated to indicate receipt of an invalid MAC or SMT frame addressed to this entity when the optional indicate on bad frames function has been selected (see 6.4.2.3).

6.4.5.3 Effect of receipt

The effect of receipt of this primitive by the SMT entity is not specified.

Copyright International Organization for Standardization
Reproduced by IHS under license with ISO
No reproduction or networking permitted without license from IHS Not for Resale

6.4.6 SM_MA_UNITDATA_STATUS.indication

This optional primitive defines the response to an SM_MA_UNITDATA.request primitive, signifying the success or failure of the request.

6.4.6.1 Semantics of the primitive

```
SM_MA_UNITDATA_STATUS.indication    (
                                    number_of_SDUs,
                                    transmission_status,
                                    )
```

The number_of_SDUs parameter reports the number of M_SDUs transmitted on a given access opportunity as a result of this request.

The transmission_status parameter shall be used to pass information back to the local requesting SMT entity. It shall be used to indicate the success or failure of a previous associated SM_MA_UNITDATA.request. The relationship between requests and status indications is implementor defined; and an implementation may provide a single status indication for a request, or an indication for one or more subrequests if the SM_MA_UNITDATA.request primitive specified more than one M_SDU.

6.4.6.2 When generated

This primitive shall be generated by MAC in response to an SM_MA_UNITDATA.request primitive from the local SMT entity.

6.4.6.3 Effect of receipt

The effect of receipt of this primitive by SMT is unspecified.

NOTE - In the event of multiple outstanding requests, additional information may be needed in order for SMT to associate the response with the appropriate request. The association may be implied by the requests being serviced in a first-in-first-out (FIFO) manner. Alternatively, MAC may maintain multiple queues of requests, at least one for each class_of_service implemented, servicing each of these queues in a FIFO manner. It is assumed that if the addressed peer MAC entity, or entities, acknowledge receipt of the frame(s) (by setting the C indicator), then either the frame(s) will be delivered, or an internal error will be reported, to the corresponding SMT entity, or entities, via an SM_MA_UNITDATA.indication.

6.4.7 SM_MA_TOKEN.request

This optional primitive is used by SMT to request the capture of the next usable token.

6.4.7.1 Semantics of the primitive

```
SM_MA_TOKEN.request    (
                       requested_token_class,
                       { requested_service_class, }
                       { asynchronous_priority }
                       )
```

Copyright International Organization for Standardization
Reproduced by IHS under license with ISO
No reproduction or networking permitted without license from IHS Not for Resale

Requested_token_class may be either non-restricted, restricted, or any. MACs implementing the optional restricted token capability control restricted dialogs through requested_token_class, which may require capture of either a restricted or non-restricted token to service the request.

Requested_service_class may optionally be either Synchronous or Asynchronous. If asynchronous, the asynchronous_priority level may optionally be specified.

6.4.7.2 When generated

This primitive may be generated by the local SMT entity when data of a time critical nature is to be transferred, or to control a restricted dialog.

6.4.7.3 Effect of receipt

The receipt of this primitive shall cause MAC to capture the next usable token based on the request parameters. MAC then enters State T2 (Transmit Data) and transmits Idle symbols (and void frames if required by L_max) until an SM_MA_UNITDATA.request primitive is received from SMT unless TRT (or THT, for asynchronous requests) expires first, in which case MAC shall issue another token of the same Token_class as was captured.

NOTE - This primitive may be used for time critical operations to minimize the effects of ring latency. This mode of operation may cause longer than usual preambles preceding a frame, thus wasting ring bandwidth; therefore it should not be used for transfers of data on the FDDI ring that are not time critical.

7 Facilities

7.1 Symbol set

A symbol is the smallest signalling element used by MAC. Symbols are used to convey three types of information:

a) Line states, such as the Halt Line State or Idle Line State.

b) Control sequences, such as the Starting Delimiter, Ending Delimiter or Control Indicator sequences.

c) Data quartets, each representing a group of four ordered data bits.

Peer MAC entities on the ring communicate via a set of fixed-length symbols. These symbols are passed across the MAC-to-PHY (or MAC-to-H-MUX) interface via the defined primitives. MAC shall generate PDUs as matched pairs of symbols, according to the rules specified in the remainder of this subclause. Additional information regarding the symbol set can be found in the FDDI standard on PHY (see ISO 9314-1 and ISO/IEC 9314-7).

7.1.1 Line state symbols

These three symbols are reserved for use on the medium between MAC PDUs. The only line state symbol generated by MAC is Idle; however, MAC can receive other line state symbols. Detection of any of these symbols within a MAC PDU constitutes an error in the PDU.

Copyright International Organization for Standardization
Reproduced by IHS under license with ISO
No reproduction or networking permitted without license from IHS Not for Resale

7.1.1.1 Quiet (Q)

The Quiet symbol indicates the absence of any transitions in the code group.

7.1.1.2 Halt (H)

The Halt symbol indicates CMT signalling sequences (in the form of line states). It is also used for filtering line state or code violation symbols from the repeated symbol stream while minimizing the d.c. component of the NRZI signal on the transmission medium.

7.1.1.3 Idle (I)

The Idle symbol indicates the normal condition of the medium between MAC PDUs. It provides a continuous fill pattern to establish and maintain clock synchronism.

7.1.2 Control symbols

7.1.2.1 Starting Delimiter (SD)

A Starting Delimiter (SD) is used to delineate the starting boundary of a data transmission sequence (i.e. a MAC or HRC PDU). This PDU is normally preceded by a preamble of Idle symbols, although it may succeed or preempt a previous PDU. The Starting Delimiter may also succeed or preempt a previous transmission. The Starting Delimiter sequence consists of the uniquely recognizable symbol sequence (JK) that can be recognized independently of previously established symbol boundaries.

7.1.2.1.1 Initial SD symbol (J)

The J symbol is the first symbol of a sequential Starting Delimiter symbol pair (JK).

7.1.2.1.2 Final SD symbol (K)

The K symbol is the second and last symbol of a sequential Starting Delimiter symbol pair (JK).

7.1.2.2 Other delimiter symbols

7.1.2.2.1 Embedded Delimiter symbol (L)

The L symbol is the second and last symbol of a sequential Starting Delimiter symbol pair (IL) embedded within a channel in Hybrid mode. It does not affect the framing boundary because it does not contain the uniquely recognizable symbol sequence of the JK pattern.

7.1.2.2.2 Ending Delimiter (ED) symbol (T)

An Ending Delimiter symbol (T) terminates all MAC PDUs. The T symbol is not necessarily the last symbol in a transmission sequence, since the Ending Delimiter may be followed by one or more Control Indicator symbols. A sequence of Ending Delimiter and Control Indicator symbols shall be generated by the DLL as a balanced sequence of symbol pairs (i.e. an even number of R, S, and T symbols). When no Control Indicators are generated, this sequence shall be generated as a pair of T symbols.

Copyright International Organization for Standardization
Reproduced by IHS under license with ISO
No reproduction or networking permitted without license from IHS Not for Resale

7.1.2.3 Control indicators

Control Indicators specify logical conditions associated with a data transmission sequence. They may be independently altered by repeating nodes without altering the normal data in the transmission sequence. A sequence of Ending Delimiter and Control Indicator symbols shall be generated by the MAC as a balanced sequence of symbol pairs (i.e. an even number of R, S, and T symbols). A single Ending Delimiter symbol followed by an odd number of Control Indicator symbols is a balanced symbol pair sequence; however, an Ending Delimiter symbol followed by an even number of Control Indicator symbols shall be balanced by adding a final Ending Delimiter symbol.

7.1.2.3.1 Reset (R)

The Reset Symbol indicates a logical ‘off’ or ‘false’ condition.

7.1.2.3.2 Set (S)

The Set Symbol indicates a logical ‘on’ or ‘true’ condition.

7.1.3 Data Quartets (0-F)

A Data Quartet symbol conveys one quartet of binary data within a data transmission sequence. The 16 Data Quartet symbols are denoted by the hexadecimal digits (0 – F), and a generic member of the set is denoted by the character ‘n’. A sequence of Data Quartet symbols shall be generated by the DLL as a balanced sequence of symbol pairs (i.e. an even number of n symbols).

7.1.4 Violation symbol (V)

The Violation symbol denotes a signal on the medium that does not conform to any legal symbol in the symbol set. The receipt of Violation symbols may result from various error conditions or during ring clock synchronization sequences. MAC shall not transmit (i.e. generate or repeat) Violation symbols.

7.2 Protocol Data Units

Two Protocol Data Unit (PDU) formats are used by MAC: tokens and frames. In the following discussion, the figures depict the formats of the PDUs in the order of transmission on the medium, with the left-most symbol transmitted first.

Fields defined as numeric values are represented as unsigned magnitudes. Operations that require comparison of fields or symbols, perform that comparison upon those fields as depicted, with the first symbol transmitted (depicted as the left-most symbol) compared first and, for the purpose of comparison, considered most significant.

--`,,`,,`-`-`,,`,,`,`,,`---

Copyright International Organization for Standardization
Reproduced by IHS under license with ISO
No reproduction or networking permitted without license from IHS Not for Resale

7.2.1 Token

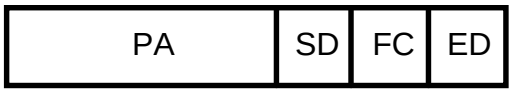

PA = Preamble (4 or more symbols)
SD = Starting Delimiter (2 symbols)
FC = Frame Control (2 symbols)
ED = Ending Delimiter (2 symbols)

The token is the means by which the right to transmit MAC SDUs (as opposed to the normal process of repeating) is passed from one MAC to another.

7.2.2 Frame

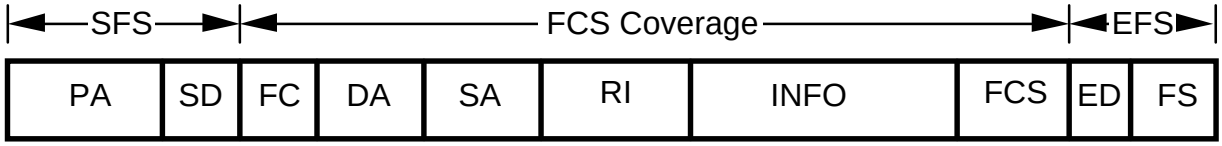

SFS = Start of Frame Sequence
PA = Preamble (4 or more symbols)
SD = Starting Delimiter (2 symbols)
FC = Frame Control (2 symbols)
DA = Destination Address (4 or 12 symbols)
SA = Source Address (4 or 12 symbols)
RI = Routing Information (0-15)x4 symbols)
INFO = Information (≥ 0 symbol pairs)
FCS = Frame Check Sequence (8 symbols)
EFS = End of Frame Sequence
ED = Ending Delimiter (1 symbol)
FS = Frame Status (≥ 3 symbols)

The frame format is used for transmitting both MAC recovery information and MAC SDUs between peer MAC entities. A frame may or may not have an information field.

7.2.2.1 Frame length

In Basic Mode the Physical Layer of FDDI requires limiting the maximum frame length to 9 000 symbols, including four symbols of the preamble. The Physical Layer of FDDI does not impose any limit on frame length in Hybrid Mode; however, to limit both the required implementation capabilities and the probability of undetected errors, the maximum frame length shall also be limited to 9 000 symbols, including four symbols of the preamble.

An implementation shall limit the maximum transmitted frame length as specified by this subclause. An implementation shall be capable of repeating any valid frame (see table 1), up to the maximum valid frame length (as defined in this subclause).

For any implemented data service, an implementation shall be capable of simultaneously transmitting and receiving (including copying) any valid frame (see table 1), up to the maximum valid frame length (as defined in this subclause), with the following exceptions:

a) For MAC frames, an implementation shall be capable of simultaneously transmitting and receiving any valid MAC frame (see table 1) whose Information field does not exceed 4 356 octets. An implementation is required to copy at least the first 64 bytes of the Information (INFO) field; subsequent INFO bytes may optionally be discarded. An implementation is not required to continuously transmit MAC frames whose Information fields exceed 64 octets.

b) An implementation is not required to transmit or copy Void frames. For implementations that do transmit Void frames, these frames shall be at least the minimum valid Void frame length (see table 1).

Copyright International Organization for Standardization
Reproduced by IHS under license with ISO
No reproduction or networking permitted without license from IHS
Not for Resale

7.3 Fields

The following is a detailed description of the individual fields contained within PDUs.

7.3.1 Preamble (PA)

The preamble (PA) shall be transmitted by the PDU originator as a minimum of four symbols of Idle when in Hybrid mode, or 16 symbols of Idle in Basic mode (including stations with no HRC capability).

In Basic mode the Physical Layers of subsequent repeating nodes may change the length of the Idle pattern consistent with Physical Layer clocking requirements. Thus, repeating nodes may see a variable length preamble that is shorter or longer than the originally transmitted preamble. A MAC implementation is not required to be capable of copying frames received in Basic mode, with less than 12 symbols of preamble. A MAC implementation is not required to be capable of repeating frames received with less than two symbols of preamble; however, if it cannot correctly repeat such a frame then it shall not repeat any part of the frame (including the Starting Delimiter).

A MAC implementation shall recognize and act upon tokens received with a preamble of zero or greater length. If a valid token is received but cannot be repeated (owing to ring timing or latency constraints), MAC shall issue a new token.

7.3.2 Starting Delimiter (SD)

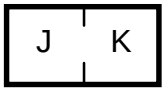

J = J symbol
K = K symbol

A Basic mode frame or token shall start with a JK symbol pair. No Basic mode frame or token is considered valid unless it starts with this explicit sequence.

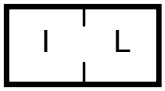

I = I symbol
L = L symbol

A Hybrid mode frame or token shall start with an IL symbol pair. No Hybrid mode frame or token is considered valid unless it starts with this explicit sequence.

The IL symbol pair shall be generated as a single byte (odd/even pair of symbols) within the Packet Data Channel.

Receipt of an IL symbol pair in Hybrid mode shall be processed identically to receipt of a JK symbol pair in Basic mode, except that receipt of an IL symbol pair in Hybrid mode while in Receiver states R2 (Receive Frame Control), R3 (Receive Frame Body) or R5 (Check Token) may be processed either as a frame strip condition or as a format error condition.

7.3.3 Frame Control (FC)

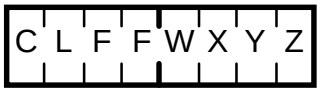

C = Class Bit
L = Address Length Bit
FF = Format Bits
WXYZ = Control Bits

Copyright International Organization for Standardization
Reproduced by IHS under license with ISO
No reproduction or networking permitted without license from IHS Not for Resale

The Frame Control field defines the type of the frame and associated control functions.

7.3.3.1 Frame class bit

The Frame Class bit indicates the class of service as follows:

C = 0 indicates an asynchronous frame
C = 1 indicates a synchronous frame

7.3.3.2 Frame address length bit

The Frame Address Length bit indicates the length of both MAC addresses (DA and SA) as follows:

L = 0 indicates 16-bit addresses
L = 1 indicates 48-bit addresses

7.3.3.3 Frame format bits

The FF bits in conjunction with the CL bits and the WXYZ Control bits, indicate the frame type as follows:

CLFF	**WXYZ**	**to**	**WXYZ**	
0L00	0000			Void frame
1000	0000			Non-restricted Token
1100	0000			Restricted Token
0L00	0001	to	1111	Station Management frame
1L00	0001	to	1111	MAC frame
CL01	0000	to	1111	LLC frame
CL10	0000	to	1111	Reserved for Implementor
CL11	0000	to	1111	Reserved for future standardization

Where: The W bit is reserved for future standardization in all frames except void frames and tokens. It shall be transmitted as zero, with the exception of SMT Next Station Addressing frames (see 7.3.3.4). It shall be ignored when received, but shall be included in the Frame Check Sequence computation for all frames (see 7.3.6). Where 7.3.3.4 specifies that the X, Y or Z bits are reserved for future assignment, the reserved bits shall be transmitted as zero and shall be ignored when received, but shall be included in the Frame Check Sequence computation.

FF = 00: Frames with FF = 00 are used for management of the FDDI network. They shall be transmitted with the Source Address field set to the individual_MAC_address of the transmitting MAC, and the RI bit set to 0. They shall not be forwarded by bridges.

void: Void frames do not contain MAC SDUs, and they are not delivered to a service interface.

Two distinct void frame formats are used by MAC. These formats may be used by MAC in the following situations, and also are permitted in other situations which are not specified:

a) Cases where a void with DA = Null should be transmitted:

   1) After a frame transmission is aborted without a valid frame having been transmitted in State T2; or

Copyright International Organization for Standardization
Reproduced by IHS under license with ISO
No reproduction or networking permitted without license from IHS Not for Resale

2) Before a token is issued when leaving state T2 or T4, that was not preceded by transmission of a valid frame in state T2 or T4; or

3) After L_Max of preamble time without beginning transmission of a frame in State T2.

b) Cases where a void with DA = SA should be transmitted:

1) Before a token is issued after one or more frames have been transmitted in State T2 with SA _ MLA or MSA (*e.g.* by a bridge); or

2) In other situations where another alternate stripping mechanism is being invoked.

Receipt of a valid void frame shall reset TVX. MAC shall strip a void frame if the SA field matches that MAC's address. Receipt of a valid void frame may cause a bridge to stop stripping. Since void frames do not carry MAC SDUs they are normally not copied.

token: All MACs shall interpret the token, if valid. Two classes of tokens, restricted and non-restricted, are specified. They are distinguished by the L bit.

station management: These frames contain Station Management (SMT) information. The contents of the Control Bits have meaning for the MAC(s) addressed by the DA field.

media access control: These frames contain MAC recovery information, and may optionally contain SMT information. All MACs shall interpret the Control Bits.

reserved for implementor: These frames contain implementation-dependent information. Their format is undefined except that it shall have valid FC, DA and SA fields, shall be an integral number of octets between Starting and Ending Delimiters, and shall end with a valid End of Frame Sequence. The contents of the Control Bits have meaning for the station(s) addressed by the DA field.

logical link control: These frames contain LLC PDUs. The contents of the Control Bits have meaning for the station(s) identified by the Destination Address.

7.3.3.4 Control bits

The following values for the Control bits, when used with the associated CLFF bits, are further defined in this part of ISO/IEC 9314. All other values, or values designated by r, are reserved for future assignment.

MAC Beacon Frame (1L00 r010): This frame is transmitted to indicate a serious ring fault, and assists in locating persistent faults. It shall be transmitted with DA = 0 or a value supplied by SMT (*e.g.* the SMT group address for RMT beacon). It shall be interpreted by each MAC that receives it. When a MAC receives its Beacon frame the ring fault has been healed, and that MAC attempts to recover the ring.

MAC Claim Frame (1L00 r011): This frame is transmitted during error recovery in Basic mode to determine which MAC creates the token. It shall be transmitted with DA = SA. It shall be interpreted by each MAC that receives it. When a MAC receives its Claim frame it has claimed the token, and a new token is generated.

MAC Purge Frame (1L00 r100): This frame is transmitted by the cycle master during error recovery in Hybrid mode to initialize the T_neg value in all MACs on the ring. It shall be transmitted with DA = SA. It shall be interpreted by each MAC that receives it. When the cycle master receives its Purge frame the ring has been purged, and a new token is generated.

SMT Next Station Addressing Frame (0L00 r111): This frame is transmitted by SMT to address the next downstream station that is a member of an addressed group. When the broadcast address is used this is the next downstream MAC. In a Next Station Addressing (NSA) Frame, the C Indicator shall be set only by the next addressed MAC on the ring. The

Copyright International Organization for Standardization
Reproduced by IHS under license with ISO
No reproduction or networking permitted without license from IHS Not for Resale

next addressed MAC is distinguished by the fact that a MAC recognizes the destination address as its own individual or group address, and receives the frame with the A Indicator reset. The reserved Control bit (FC.W) shall be transmitted as one in Basic mode and as zero in Hybrid mode. It shall be ignored when received in either mode, but shall be included in the Frame Check Sequence computation (see 7.3.7).

Asynchronous LLC Frame (0L01 WPPP): This frame contains an LLC PDU using the asynchronous transmission service. The last three Control bits (PPP) indicate the SDU (user) priority, with PPP=111 being the highest priority and PPP=000 being the lowest priority.

Synchronous LLC Frame (1L01 rrrr): This frame contains an LLC PDU using the synchronous transmission service.

Implementor Frame (CL10 rUUU): This frame contains an implementor defined MAC SDU. The control bits, UUU, are implementor defined.

7.3.4 Destination and source addresses

Each frame shall contain two address fields: the Destination (MAC) Address and the Source (MAC) Address, in that order. Addresses may be either 16 or 48 bits in length; however, all MACs shall implement 48-bit address capability. The Destination and Source addresses shall both be transmitted starting from the most significant data quartet (symbol) and proceeding in order of significance to the least significant data quartet.

Both 16-bit and 48-bit addresses may be disabled for specific protocol operations. If an address is disabled or not implemented it is equivalent to the null address.

A MAC with only 48-bit address capability shall be capable of functioning in a ring with MACs concurrently operating with 16-bit addresses. To do so, such a MAC shall be capable of:

a) Repeating frames with 16-bit addresses.

b) Recognizing the 16-bit broadcast address of all ones.

c) Reacting correctly to MAC recovery frames with 16-bit addresses.

d) Resetting TVX and incrementing the appropriate frame counters on receipt of valid frames with 16-bit addresses.

A MAC using 16-bit addresses shall have a minimum 48-bit address capability such that the MAC shall:

a) Have a fully functional 48-bit individual address.

b) Recognize the 48-bit broadcast address of all ones.

c) React correctly to MAC recovery frames with 48-bit addresses.

d) Be capable of independently enabling or disabling each of the 48-bit SMT group addresses.

e) Reset TVX and increment the appropriate frame counters on receipt of valid frames with 48-bit addresses.

Copyright International Organization for Standardization
Reproduced by IHS under license with ISO
No reproduction or networking permitted without license from IHS Not for Resale

7.3.4.1 Destination address

The Destination Address identifies the MAC(s) for which the frame is intended. The first bit(s) transmitted in the destination address are control bits: the first for individual or group addresses, and in the case of 48-bit addresses, the second for universally or locally administered addresses:

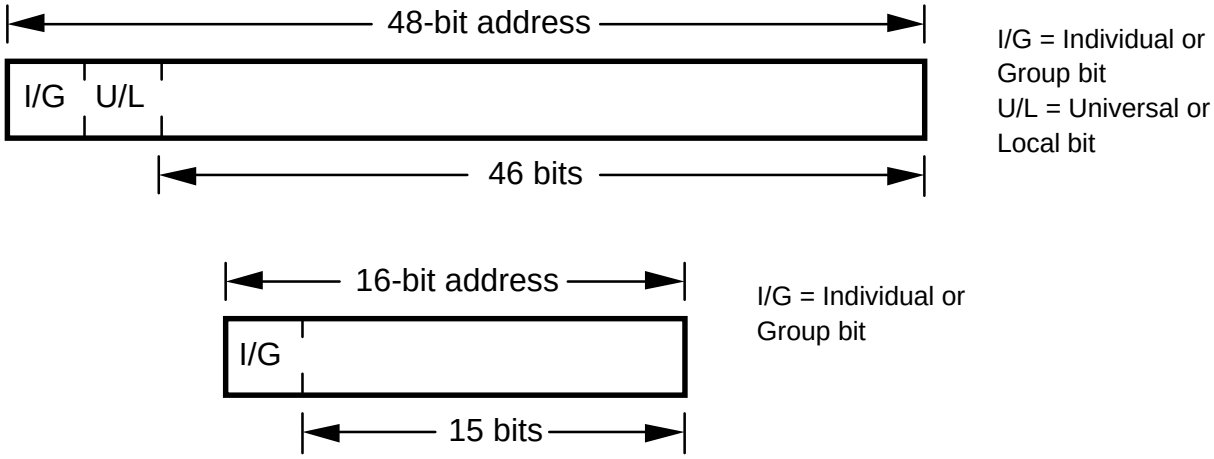

Individual and Group Addresses: The first bit transmitted of the destination address distinguishes individual from group addresses:

0 = individual address, 1 = group address

Individual Address: An individual address identifies a particular MAC on the ring and shall be distinct from all other individual MAC addresses on the same ring (except for the Null address, see below), and from all other individual MAC addresses on a global basis (in the case of universal administration).

> WARNING - A duplicate individual address severely limits the MAC's ability to communicate with other MACs and can disrupt the normal operation of the ring. Frame transmission when another MAC recognizes the frame's source address will cause the second MAC to strip the frame, which can cause TVX to expire in downstream stations. Multiple MACs sharing an individual address can experience a partial or total loss of communication with each other and with other MACs, due to premature frame stripping. The MAC recovery process can produce multiple Tokens or oscillations between Claim and Beacon processes if a MAC with a duplicate address prevails over non-duplicate MACs.

Null Address: An address of all zeros is the Null address. The Null address shall not be used as the MLA or the MSA.

Group Address: A group address is used to address a frame to multiple destination MACs. Group addresses may be associated with zero, one or more, or all MACs on a given ring. In particular, a group address is an address associated by convention with a group of logically related MACs.

Broadcast Address: The group address consisting of all ones shall constitute a broadcast address, denoting the set of all MACs on a given ring. Support for the broadcast address is required. This address shall not be disabled.

Copyright International Organization for Standardization
Reproduced by IHS under license with ISO
No reproduction or networking permitted without license from IHS Not for Resale

SMT Group Address: Specific group addresses have been assigned for SMT protocols as defined in ISO/IEC 9316-6. The addresses assigned to these protocols have been assigned to simplify implementation by having the addresses differ in only the last symbol received. Addresses that have been assigned have leading octet values of 01 80 C2 00 01 (in canonical representation). Furthermore, the first transmitted symbol (last canonical symbol) of the last octet has a value of zero. Support for independent enabling or disabling of each group address for all of the 16 SMT group addresses is required. Additional information on these addresses is included in annex A.

Address Administration: The second bit transmitted of a 48-bit destination address indicates whether the address has been assigned by a universal or local administrator:

0 = universally administered, 1 = locally administered

There are two methods of administering 48-bit addresses: locally or through a universal administrator. Annex A contains additional information on address administration.

7.3.4.2 Source address

The Source Address shall be the (short or long) individual_MAC_address of the MAC originating the frame, i.e. the address of the MAC transmitting the frame except when the frame is being forwarded by a bridge. It shall have the same length as the Destination Address in the same frame. Except when a frame is being forwarded by a bridge, MAC shall not transmit a frame with a Source Address other than its own enabled (short or long) individual_MAC_address.

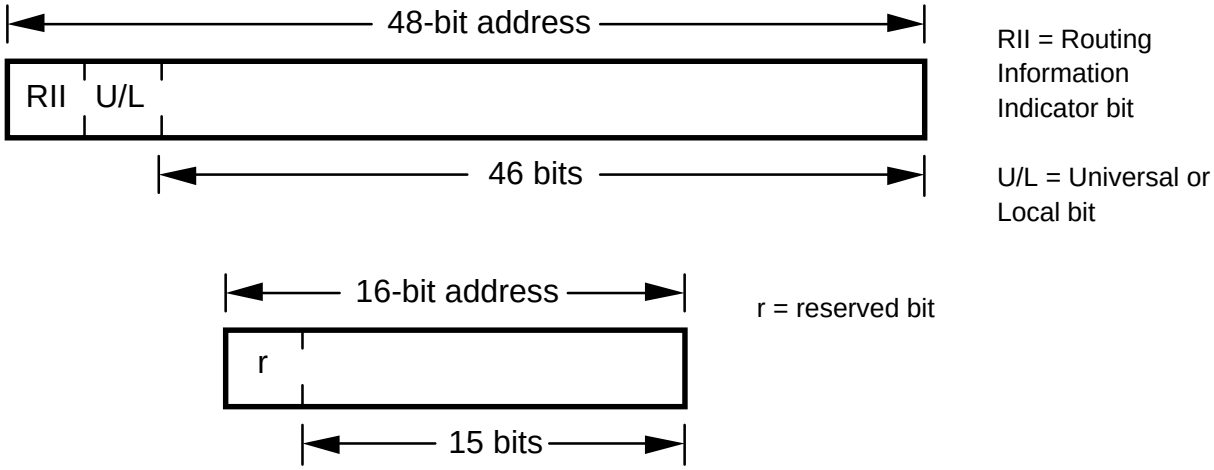

Routing Indicator: The first bit transmitted of the source address is used as a routing indicator:

0 = no routing information, 1 = routing information

In 48-bit source addresses the Routing Information Indicator (RII) bit shall be transmitted as one to indicate the presence of a Routing Information (RI) field immediately after the Source Address (SA) field; otherwise, it shall be transmitted as zero. Use of this bit in 16-bit source addresses is reserved for future standardization, and it shall be transmitted as zero. This bit shall be ignored for comparison of a 48-bit or 16-bit source address with the corresponding Individual_MAC_address.

Address Administration: The second bit transmitted of a 48-bit source address indicates whether the address has been assigned by a universal or local administrator:

0 = universally administered, 1 = locally administered

Copyright International Organization for Standardization
Reproduced by IHS under license with ISO
No reproduction or networking permitted without license from IHS Not for Resale

Null Address: The Null address shall not be used in the Source Address Field.

7.3.5 Routing Information (RI) field

When the RII bit of a 48-bit source address field is set to one, the Routing Information (RI) field shall be included in the frame. The RI Field contains 2 to 30 octets (symbol pairs) whose format and meaning is specified in the ISO/IEC 10038 standard on bridging. The length of the RI field in octets shall be conveyed in the first octet of the RI field as follows:

xxxN NNN0 where NNNN0 = length of RI field in octets.

Annex C contains additional information on bridging.

7.3.6 Information (INFO) field

The INFO Field contains zero, one, or more data symbol pairs whose meaning is determined by the FC field and whose interpretation is made by the destination entity, e.g., MAC, LLC, or SMT. The length of the INFO field is variable, but shall conform both to the maximum frame length criteria defined in 7.2.1 and to the frame validity criteria defined in table 1.

7.3.6.1 Order of transmission

The Service Data Units (SDUs) passed between LLC and MAC are assumed to be ordered sequences of octets. The MAC entity subdivides these octets into data symbol pairs with the most significant data symbol of each pair to be transmitted first. The ordering of these data symbol sequences shall be preserved through all MAC entities and the associated PHY entities.

7.3.6.2 MAC supervisory frames

The Information Field for MAC supervisory frames shall be at least four octets in length. The first four octets are defined as follows:

Claim Frame - The bid for Target Token Rotation Time expressed as the unsigned twos complement of desired Target Token Rotation Time in octets.

Purge Frame - The bid for Target Token Rotation Time expressed as the unsigned twos complement of desired Target Token Rotation Time in octets.

Beacon Frame - The first octet is Beacon Type:

0000 0000	Unsuccessful Claim
	All other values are reserved for future assignment

The second octet is Receiver condition:

0000 0000	Reserved for backward compatibility
0000 0001	None of the following conditions exist
0000 001x	TVX is expired
0000 01xx	MAC receiver is in the LISTEN state
	All other values are reserved for future assignment

The third octet is the Last_FC.

The fourth octet is the Late_Ct.

Copyright International Organization for Standardization
Reproduced by IHS under license with ISO
No reproduction or networking permitted without license from IHS Not for Resale

The first four octets of the Information field shall be supplied by MAC in Transmitter States T4 (for Claim and Purge frames) and T5 (for Beacon frames) as specified in this subclause, except that the first octet (Beacon Type) shall be supplied by SMT when entry to State T5 was triggered by a SM_MA_CONTROL.request(send_mac_frame(beacon)).

If MAC frames are transmitted in State T2 (due to SM_MA_UNITDATA.request), then the first four octets shall be taken from the SDU supplied by SMT. If the supplied SDU is a Beacon frame, then the contents of the first four octets of the Information field are defined by SMT and ignored by MAC.

NOTE - Unless SMT can ensure that values in a Type 0 Beacon SDU given to MAC accurately reflect the current MAC state, a value of zero should be supplied for the second octet.

Subsequent octets are optional and, if present, are defined and supplied by SMT.

To aid in filtering the copying of duplicate received MAC frames, which may be continuously transmitted, any relevant change in the contents of the Information field shall include a change within the first four octets.

7.3.7 Frame Check Sequence (FCS)

This subclause specifies the generation and checking of the FCS field. This field is used to detect erroneous data bits within the frame as well as erroneous addition or deletion of bits to the frame. The fields covered by the FCS field include the FC, DA, SA, INFO, and FCS fields. Annex B provides further information on the generation and use of the FCS.

7.3.7.1 Definitions

F(X): A degree k-1 polynomial that is used to represent the k bits of the frame covered by the FCS sequence (see 7.2.2). For the purposes of the FCS, the coefficient of the highest order term shall be the first bit transmitted.

L(X): A degree 31 polynomial with all of the coefficients equal to one, i.e.,

$L(X)= X^{31} + X^{30} + X^{29} +\ldots+ X^2 + X + 1$

G(X): The standard generator polynomial

$G(X) = X^{32} + X^{26} + X^{23} + X^{22} + X^{16} + X^{12} + X^{11} + X^{10} + X^8 + X^7 + X^5 + X^4 + X^2 + X + 1$

R(X): The remainder polynomial that is of degree less than 32.

P(X): The remainder polynomial on the receive checking side that is of degree less than 32.

FCS: The FCS polynomial that is of degree less than 32.

Q(X): The greatest multiple of G(X) in $[X^{32} F(X) + X^k L(X)]$

Q*(X): $X^{32} Q(X)$.

M(X): The sequence that is transmitted.

M*(X): The sequence that is received.

C(X): A unique polynomial remainder produced by the receiver upon reception of an error-free sequence. This polynomial has the value.

$C(X) = X^{32} L(X) / G(X)$

$C(X) = X^{31} + X^{30} + X^{26} + X^{25} + X^{24} + X^{18} + X^{15} + X^{14} + X^{12} + X^{11} + X^{10} + X^8 + X^6 + X^5 + X^4 + X^3 + X + 1$

Copyright International Organization for Standardization
Reproduced by IHS under license with ISO
No reproduction or networking permitted without license from IHS Not for Resale

7.3.7.2 FCS Generation equations

The equations that are used to generate the FCS sequence from F(X) are as follows:

$$FCS = L(X) + R(X) = R\$(X). \quad (1)$$

where R$(X) is the ones complement of R(X)

$$[X^{32} F(X) + X^{k} L(X)] / G(X) = Q(X)+R(X) / G(X) \quad (2)$$

$$M(X) = X^{32} F(X) + FCS \quad (3)$$

NOTE - All arithmetic is modulo 2. In equation (1), adding L(X) (all ones) to R(X) simply produces the one's complement of R(X); thus this equation is specifying that the R(X) is inverted before it is sent out. Equation (3) simply specifies that the FCS is appended to the end of F(X).

7.3.7.3 FCS checking

The received sequence M*(X) may differ from the transmitted sequence M(X) if there are transmission errors. The process of checking the sequence for validity involves dividing the received sequence by G(X) and testing the remainder. Direct division, however, does not yield a unique remainder because of the possibility of leading zeros. Thus a term L(X) is prepended to M*(X) before it is divided. Mathematically, the received checking is shown in equation (4).

$$X^{32} [M^*(X) + X^{k} L(X)] / G(X) = Q^*(X) + P(X) / G(X) \quad (4)$$

In the absence of errors, the unique remainder is the remainder of the division

$$P(X) / G(X) = X^{32} L(X) / G(X) = C(X) \quad (5)$$

7.3.8 Ending Delimiter (ED)

The symbol T is the ending delimiter of tokens and frames. Ending delimiters and optional Control Indicators shall form a balanced symbol sequence, i.e., be transmitted in pairs so as to maintain octet boundaries. This shall be accomplished by adding a trailing T symbol as required.

7.3.8.1 Token ending delimiter

The Ending Delimiter of a token shall consist of two consecutive T symbols.

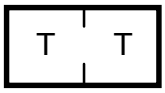

T = Terminate Symbol

7.3.8.2 Frame ending delimiter

The Ending Delimiter field of a frame shall consist of a single T symbol. A frame whose first T is the second symbol of a symbol pair may optionally be processed as a format error, since this format cannot be legally transmitted.



T = Terminate Symbol

Copyright International Organization for Standardization
Reproduced by IHS under license with ISO
No reproduction or networking permitted without license from IHS Not for Resale

7.3.9 Frame Status (FS)

The Frame Status field (FS) shall consist of an arbitrary length sequence of Control Indicator symbols (R and S) that follows the Ending Delimiter of a frame. It ends if any symbol other than R or S is received. If an expected indicator is not received as R or S, it shall be reported as not received. A trailing T symbol, if present, shall be repeated as part of the FS field. The first three Control Indicators of the Frame Status field are mandatory, indicating Error Detected (E), Address Recognized (A), and Frame Copied (C). The use of additional Control Indicators in the Frame Status field after the C indicator is optional and is Implementor defined. Although the use of optional additional Control Indicators in the Frame Status field is undefined by ISO/IEC 9314, all conforming FDDI MACs shall repeat the entire Frame Status field.

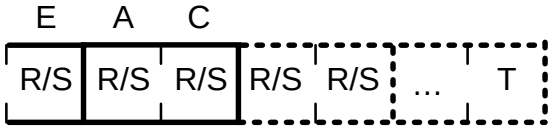

T = Terminate Symbol
R = Reset Symbol
S = Set Symbol

7.3.9.1 Error detected indicator (E)

The error detected indicator (E) is transmitted as R by the MAC that originates the frame. All MACs on the ring inspect repeated frames for errors. If an error is detected and the received E indicator is not S, then an error is counted. The E indicator is transmitted as S by a repeating MAC when either an error to be counted is detected, the received E indicator is S, or the E indicator was not received.

7.3.9.2 Address recognized indicator (A)

The address recognized indicator is transmitted as R by the MAC that originates the frame. If another MAC recognizes the destination address as its own individual or group address it shall set the A indicator to S. A MAC shall not set the A indicator for a partially filtered group address, i.e. it shall only set the A indicator for a precise match.

A bridge performing source routing which recognizes a received frame as one it intends to forward by means of the information in the Routing Information (RI) field shall set the A indicator of the repeated frame to S.

In other cases, a repeating MAC shall transmit this indicator as received.

7.3.9.3 Frame copied indicator (C)

The frame copied indicator is transmitted as R by the MAC that originates the frame. If another MAC has set the A indicator and copied the frame (into its receive buffer), it shall set the C indicator to S.

If a transparent bridge including optional capability for setting the C indicator recognizes the destination address as one to be forwarded, has not set the A indicator, and has copied the frame (into its receive buffer) for forwarding, it shall set the C indicator to S if the A indicator is received as R.

If a MAC including optional capability for clearing the C indicator has set the A indicator, and has not copied the frame (into its receive buffer), it shall transmit the C indicator as R if the received A indicator is R.

In other cases, a repeating MAC shall transmit this indicator as received.

Copyright International Organization for Standardization
Reproduced by IHS under license with ISO
No reproduction or networking permitted without license from IHS Not for Resale

Annex C contains more information on these options.

7.4 Timers

Each MAC shall maintain three timers to regulate the operation of the ring. The values of these timers may vary from MAC to MAC on the ring, provided that the applicable ring limits are not violated. The default values defined in this subclause use the current values of parameters defined in other FDDI documents. Annex D describes the derivation of the values used herein.

The term Reset, when applied to timers, shall mean that the timer is reset to its initial value and (re)started. The terms disabled and enabled refer to stopping and starting the timers, respectively.

7.4.1 Token-Holding Timer (THT)

Each MAC shall have a timer THT, called the Token-Holding Timer, that controls how long the MAC may transmit asynchronous frames. A MAC may initiate a transmission of an asynchronous frame if timer THT has not expired and is less than the T_Pri (see 8.1.4.2) associated with the frame to be transmitted. Timer THT is initialized with the current value of timer TRT (see 7.4.3) when the token is captured.

7.4.2 Valid-Transmission Timer (TVX)

Each MAC shall have a timer TVX, called the Valid-Transmission Timer, to recover from transient ring error situations. Whenever TVX expires, it remains expired until it is explicitly disabled or reset by the Receiver. The timeout value of TVX, called TVX_value, shall be set such that:

TVX_value > max(D_Max, F_Max) + Token_Time + F_Max + S_Min

Annex D describes the derivation of these parameters.

The appropriate TVX_value is different in Basic and Hybrid modes, since D_Max and F_Max differ in the two modes. The default value for TVX_value with Hybrid mode disabled shall be at least 2,500 0 milliseconds (62 500 symbol times at 100 Mbits/sec).

TVX_value is determined in a different manner in hybrid mode, where the Cycle Master uses TVX expiration to invoke the purge process, before any other MAC invokes the claim process due to TRT expiration. The default value for TVX with Hybrid mode enabled shall be at least 3,600 0 ms (90 000 symbol times at 100 Mbits/sec). This value shall be scaled for the effective MAC data rate by the Cycle Master.

NOTE - A cycle master implementation may scale the TVX_value parameter based on the current Programming Template, or may directly scale TVX by driving the TVX timer at the effective packet data channel rate based on counting symbols. The first method is more accurate, and will produce much better results for slower packet data channel rates. This is because the TVX_Value consists of terms that scale with the effective channel rate (e.g. maximum frame time), as well as those that do not (e.g. maximum ring latency).

The FDDI standard on HRC (see ISO/IEC 9314-5) contains additional information regarding the operation of the cycle master.

Copyright International Organization for Standardization
Reproduced by IHS under license with ISO
No reproduction or networking permitted without license from IHS Not for Resale

7.4.3 Token-Rotation Timer (TRT)

Each MAC shall have a timer TRT, called the Token-Rotation Timer, used to control ring scheduling during normal operation and to detect and recover from serious ring error situations. Since TRT measures the time between token arrivals, it operates the same in either basic or hybrid mode. In hybrid mode, all non-packet data bandwidth (including cycle headers) is allocated from synchronous bandwidth (see 8.1.4.1). TRT is initialized with different values during different phases of ring operation. Whenever TRT expires, it is reinitialized to the current value of T_Opr, and Late_ct is incremented.

T_Opr, controlled by the transmit state machine of MAC, is the operative timeout value of TRT. T_Opr is negotiated between MACs to a value that is shorter than T_Max for all MACs on the ring as part of the Claim Token bidding process (see 8.4.5), which occurs during ring initialization. Thus T_Opr affects the operating characteristics of the ring. Each MAC uses a value T_Req, between its T_Min and T_Max values, to negotiate for the lowest value of T_Opr, such that the lowest value of T_Req becomes T_Opr for the ring.

Note that because of the nature of the timed token rotation protocol, the token may be received up to one T_Opr late. Thus a station requiring a guaranteed response time should set its T_Req to one-half of the required response time. A station requiring a guaranteed bandwidth (maximum average response time) should set its T_Req equal to the required time, since the accumulated lateness cannot be greater than the worst case lateness on one rotation.

The minimum value of TRT, called T_Min, affects the interoperability of MACs on the ring. If the negotiated value of T_Opr is less than a MAC's T_Min, then that MAC is unable to correctly provide services to higher layers requiring the T_min. The default value of T_Min shall not be greater than 100 000 symbol times (4,0 ms).

The maximum value of TRT, called T_Max, shall be several times the maximum ring initialization time to permit stable ring recovery. The default value for T_Max in Basic mode shall be at least 165 ms (4 125 000 symbol times at 100 Mbits/sec). Note that a value of 167,772 16 ms may be derived conveniently from the symbol clock (i.e., with a 22-bit counter) and may be used by conforming FDDI MAC entities as the default value of T_Max in Basic mode.

The default value for T_Max in Hybrid mode shall be at least 670 ms.(16 750 000 symbol times at 100 Mbits/sec). Note that a value of 671,088 64 ms may be derived conveniently from the symbol clock (i.e., with a 24-bit counter) and may be used by conforming FDDI MAC entities as the default value of T_Max in Hybrid mode.

Annex D contains additional information on the calculation of ring initialization time.

> NOTE - The time spent in States T0, T4, and T5 of the Transmitter state machine during ring recovery is directly dependent on the choice of the T_Max parameter if there is a fault and thus the T_Max value should not be set to the maximum value supported by this part of ISO/IEC 9314 on MAC (i.e. with a 32-bit counter) unless specifically required by the network.

The Token Rotation Timer shall also be used to time the delay between transmission of MAC frames and enabling of duplicate address detection in received MAC frames, unless an alternative timing method that detects the required conditions is implemented. This function is permitted but not required when Ring_Operational is set.

The minimum duplicate MAC frame detection delay, called DM_Min, shall be set such that:

T_Max >> DM_Min > D_Max

The default value for DM_Min shall be equal to the default value for TVX_value (at least 2,5 ms with Hybrid mode disabled and at least 3,6 ms with Hybrid mode enabled). This value is not required to be scaled for the effective MAC data rate in Hybrid mode.

Copyright International Organization for Standardization
Reproduced by IHS under license with ISO
No reproduction or networking permitted without license from IHS Not for Resale

7.4.4 Late Counter (Late_ct)

The number of TRT expirations since MAC was reset or a token (restricted or non-restricted) was received shall be accumulated as the value Late_ct to assist Station Management in the isolation of serious ring errors.

Late_ct is set to one when the MAC is initialized or reset and is incremented, whenever TRT expires. After the ring has become operational (Ring_Operational), Late_ct is cleared (to zero) whenever the transmitter is notified by the receiver of the arrival of a valid token (restricted or non-restricted). Late_ct is incremented on each expiration of TRT, until it reaches a value of 255. Late_ct shall be capable of assuming any value from zero to 255, inclusive.

7.4.5 Token Counter (Token_ct)

The number of tokens received by a MAC may optionally be counted by a MAC, to aid SMT in determination of the throughput of the ring.

7.5 Frame counts

To aid in performance monitoring, problem determination and fault location, MAC shall maintain counts of all frames received and of all frames received with one or more errors that were previously undetected. A MAC implementation may optionally maintain counts of SDUs transmitted, received and delivered, and received but not delivered.

To be counted as a frame, a frame sequence shall be terminated by a frame ending delimiter (T symbol). Frame sequences terminated by stripping actions (Idle symbols) or the reception of invalid symbol sequences shall not be counted as frames received. Full detail on Receiver actions for receiving and counting frames is provided in 8.3.

7.5.1 Frame_ct

This is the count of all frames received.

7.5.2 Error_ct

This is the count of error frames that were detected by this MAC and no previous MAC. Frames received with the Error Detected Indicator set (Er = S) are not counted as error frames by a MAC, since they should already have been counted by the MAC that set the Error Indicator.

7.5.3 Lost_ct

Lost_ct is a count of all instances in which MAC is in the process of receiving a frame or token and an error is detected that prevents complete PDU reception. In these instances, MAC shall increment the Lost_ct and strip the rest of the PDU from the ring, replacing it with Idle symbols. The Lost_ct is not incremented in subsequent MACs that recognize the remnant as a stripped PDU because it is followed by an Idle symbol.

Copyright International Organization for Standardization
Reproduced by IHS under license with ISO
No reproduction or networking permitted without license from IHS Not for Resale

7.5.4 Copied_ct

Copied_ct is an optional count of frames containing SDUs addressed to and successfully copied by this MAC. This count shall exclude Void and MAC frames (*e.g.* Claim frames). This count is used by SMT to determine MAC input SDU load.

7.5.5 Transmit_ct

Transmit_ct is an optional count of frames containing SDUs transmitted by this MAC. This count shall exclude all frames generated internally by MAC (e.g., Void frames generated in state T2 or T3, Claim or Purge frames generated in state T4, or Beacon frames generated in state T5). MAC frames transmitted via the SM_MA_UNITDATA.request primitive shall be included in the Transmit_ct. This count is used by SMT to determine MAC output SDU load.

7.5.6 Not_Copied_ct

Not_Copied_ct is an optional count of frames containing SDUs addressed to but not copied into a receive buffer by this MAC. This count shall exclude Void and MAC frames, optionally any frames generated by this MAC (M_Flag set), and secondary NSA or transparent bridge frames (N_Flag set). This count is used by SMT to determine MAC input SDU congestion.

8 Operation

This clause specifies the operation of the MAC entity of an FDDI station.

8.1 Overview

This subclause provides a descriptive overview of MAC operation. The formal specifications are contained in subsequent subclauses (8.2 to 8.4).

Access to the Physical medium (the ring) is controlled by passing a token around the ring. The token gives the downstream MAC (receiving relative to the MAC passing the token) the opportunity to transmit a frame or a sequence of frames. If a MAC wants to transmit, it strips the token from the ring before the Frame Control field of the token is repeated. After the captured token is completely received, the MAC shall begin transmitting its eligible queued frames.

After transmission, the MAC issues a new token for use by a downstream MAC.

MACs that are not transmitting repeat the incoming symbol stream. While repeating the incoming symbol stream, the MAC determines whether frames are intended for this MAC. This is done by matching the DA to its own address or a relevant group address. If a match occurs, the frame is processed by the MAC or sent to SMT or LLC.

Copyright International Organization for Standardization
Reproduced by IHS under license with ISO
No reproduction or networking permitted without license from IHS Not for Resale

8.1.1 Frame transmission

Upon a request for Service Data Unit (SDU) transmission, MAC constructs the Protocol Data Unit (PDU) or frame from the SDU by placing the SDU in the INFO field of the frame. The SDU remains queued by the requesting entity awaiting the receipt of a token that may be used to transmit it.

Upon reception and capture of an appropriate token, the MAC begins transmitting its queued frame(s) in accordance with the rules of token holding.

During transmission, the FCS for each frame is generated and appended to the end of the PDU.

8.1.2 Token transmission

After transmission of the frame(s) is completed, the MAC immediately transmits a new token.

8.1.3 Frame stripping

Each transmitting station shall be responsible for stripping from the ring the frames that it originated. A MAC shall strip each frame that it transmits beginning not later than the seventh symbol after the end of the SA field. Normally, this is accomplished by stripping the remainder of each frame whose Source Address matches the MAC's address from the ring and replacing it with Idle symbols.

The process of stripping leaves remnants of frames, consisting at most of the PA, SD, FC, DA, SA, and six symbols after the SA field, followed by Idle symbols. These remnants exist because the decision to strip a frame is normally based upon recognition of the MAC's address in the SA field, which cannot occur until after the initial part of the frame has already been repeated. These remnants are not recognized as frames because they lack an Ending Delimiter (ED). The limit on remnant length also prevents remnants from satisfying the minimum frame length criteria. To the level of accuracy required for statistical purposes, they can be distinguished from error or lost frames because they are always followed by the Idle symbol. Remnants are removed from the ring when they encounter a transmitting MAC. Remnants may also be removed by the Smoothing function of PHY. An implementation is also permitted to remove remnants by any other interoperable means.

The maximum remnant length impacts station operation, at both the source and the destination of the frame. The limit of six symbols after the Source Address provides a necessary guideline for the design of a receiver. However, an implementation that does not strip at least the last symbol of the SA field may have difficulty in implementing a precise (SM_)MA_UNITDATA_STATUS.indication service (due to ambiguous setting of M_Flag caused by recirculating remnants).

Some implementations (*e.g.* bridges) will transmit frames with another MAC’s individual address in the SA field. An alternative stripping method shall be used for such frames. Any method which is interoperable with the rest of this part of ISO/IEC 9314 may be employed. Examples of alternative methods are described in annex C. To ensure interoperability of different stripping methods, an alternative stripping method shall stop stripping when it receives a valid token or clears Ring_Operational.

Copyright International Organization for Standardization
Reproduced by IHS under license with ISO
No reproduction or networking permitted without license from IHS Not for Resale

8.1.4 Ring scheduling

Transmission of normal PDUs (i.e., PDUs formed from SDUs) on the ring is controlled by a Timed Token Rotation protocol. This protocol supports two major classes of service:

a) **synchronous:** Guaranteed bandwidth and response time

b) **asynchronous:** Dynamic bandwidth sharing

The synchronous class of service is used for those applications whose bandwidth and response time limits are predictable in advance, permitting them to be preallocated (via SMT). The asynchronous class of service is used for those applications whose bandwidth requirements are less predictable (e.g., bursty or potentially unlimited) or whose response time requirements are less critical. Asynchronous bandwidth is instantaneously allocated from the pool of remaining ring bandwidth that is unallocated, unused, or both.

Within each MAC, the MAC Transmitter maintains a Token-Rotation Timer (TRT) to control ring scheduling. A Target Token Rotation Time (TTRT) is negotiated during ring initialization via the Claim Token process. The MAC Receiver saves the most recently received TTRT bid (T_Bid_Rc) and passes the final negotiated TTRT value (T_Neg) to the MAC transmitter, where it becomes the operative TTRT (T_Opr) upon successful ring initialization. TRT shall be reset each time an early token arrives at a MAC. A token arriving before TRT reaches TTRT (i.e., an early token) may be used for both synchronous and asynchronous transmissions. A token arriving after TRT reaches TTRT (i.e., a late token) may be used only for synchronous transmissions. Different mechanisms are used to limit the length of a MAC's synchronous and asynchronous transmissions. However, in no case is a MAC intended to hold the token longer than TTRT.

This protocol guarantees an average TRT (or average synchronous response time) not greater than TTRT, and a maximum TRT (or maximum synchronous response time) not greater than twice TTRT.

8.1.4.1 Synchronous transmission

Each station has a known allocation of synchronous bandwidth, i.e., the maximum time that the MAC may hold the token without THT being enabled. Allocation of synchronous bandwidth is established by SMT, using SMT PDUs. Initially, each station has a zero allocation, and it uses the SMT protocol to change its allocation. A station may "remember" its allocation across ring reinitialization, provided that there has not been a TTRT change. Synchronous service shall be disabled whenever a Beacon frame is received, until enabled by SMT. The sum of all stations' current allocations should not exceed the maximum usable synchronous bandwidth of the ring, expressed as:

TTRT - (D_Max + F_Max + 2 * Void_Frame_time + Token_time)

Annex D contains more information on the derivation of timing parameters.

Support for synchronous transmission is optional, and is not required for interoperability.

8.1.4.2 Asynchronous transmission

Asynchronous bandwidth is controlled by a two-tier allocation mechanism, enforced by two classes of tokens:

a) **non-restricted token:** Asynchronous bandwidth is shared among all requesters.

Copyright International Organization for Standardization
Reproduced by IHS under license with ISO
No reproduction or networking permitted without license from IHS Not for Resale

b) **restricted token:** Asynchronous bandwidth is dedicated to a single extended dialogue controlled by a specific requester.

The following description assumes that all timer values are implemented as the unsigned twos complement of the desired time, with the timers TRT and THT counting up toward zero. Any functionally equivalent implementation is allowed.

The ring begins operation in non-restricted token mode. This is the normal mode of operation. It supports fair access at a frame granularity. In this mode multiple levels of asynchronous priority may optionally be distinguished by a station. For each implemented priority level (n), a threshold value (T_Pri[n]) is established, forming a set of threshold values (T_Pri). A non-restricted token may only be captured for transmission of a frame of priority n when the current Token-Rotation Timer (TRT) is less than the associated priority threshold value (T_Pri([n]). By setting lower threshold values for lower priority levels, transmission of lower priority frames is deferred when the ring is more heavily loaded (i.e., the token rotation time exceeds the threshold).

Whenever an early token is captured, the current value of TRT shall be saved in an asynchronous Token-Holding Timer (THT), and TRT shall be reset to time the next token rotation. THT is enabled (running) during asynchronous transmission. The difference between its current value and the target value (TTRT) reflects the remaining asynchronous bandwidth available to this MAC. An asynchronous frame of priority n may only be transmitted if THT is less than the associated priority threshold value (T_Pri([n]). Multiple asynchronous priority levels is an implementation option. If they are not implemented, then all asynchronous frames shall have an effective threshold value of Late_ct = 0.

Restricted token mode is entered when a station wishes to initiate an extended dialogue requiring substantially all of the unallocated ring bandwidth (e.g., an extended burst data transfer from a high-speed device). The management of the extended dialogue (e.g., decisions to initiate, continue and terminate the dialogue) shall be the responsibility of higher-level protocols. The initiating station captures a non-restricted token, transmits its initial dialogue frame(s), then issues a restricted token. The addressed destination station(s) receive the initial dialogue frame(s), enter restricted mode, and exchange restricted tokens for the duration of the dialogue (potentially many times TTRT). Restricted token mode is terminated when the terminating station captures a restricted token, transmits its final dialogue frame(s), then issues a non-restricted token.

Restricted token mode supports fair access at a dialogue granularity, in that each contending extended dialogue initiator has equal opportunity to initiate new dialogues (deterministically, if the initiator is also the terminator). Restricted token mode prevents any asynchronous transmission (including SMT normal background protocols, e.g., Neighbour Identification) other than the current extended dialogue, because normal asynchronous transmission cannot use restricted tokens and any new extended dialogue may only begin with a non-restricted token. However, synchronous transmission may proceed normally in restricted token mode, because either class of token may be used.

Use of THT in restricted token mode is not required, since the dialogue consists of a deterministic sequence of exchanges, and frame-granular fairness to other traffic has been preempted. Ignoring THT is sometimes useful in that it extends to restricted token mode service the bandwidth and response time guarantees of synchronous service, and may be used in conjunction with MA_TOKEN.request to minimize the effect of ring latency. However, if THT is ignored, the station shall not intrude on the aggregate synchronous bandwidth allocation (known to SMT).

--`,,`,,`-`-`,,`,,`,`,,`---

Copyright International Organization for Standardization
Reproduced by IHS under license with ISO
No reproduction or networking permitted without license from IHS Not for Resale

To ensure fairness and detect potential hang conditions during restricted token mode operation, SMT monitors the duration of restricted token mode. If restricted token mode operation exceeds the maximum time, SMT should abort the extended dialogue. A restricted dialogue shall be disabled by the reception of a MAC frame, and the restricted dialogue may only be resumed using the same steps that initiate a dialogue.

Support for restricted token mode transmission is optional, and is not required for interoperability. An implementation of restricted token mode may support ignoring THT, but is not required to. A MAC-2 implementation shall be capable of permitting SMT to monitor restricted token mode.

8.1.5 Ring monitoring

The MAC monitoring functions are distributed among all stations on a ring. Each MAC continuously monitors the ring for invalid conditions requiring ring (re)initialization. Ring (re)initialization is a consequence of either inactivity or incorrect activity on the ring. Ring inactivity is typically detected by expiration of the Valid-Transmission Timer (TVX) in the MAC Receiver. Incorrect ring activity is typically detected by counting successive expirations of the Token-Rotation Timer (TRT) with the Late Counter (Late_ct) in the MAC Transmitter, or by SMT processes.

8.1.5.1 Claim Token process

Any station detecting a requirement for ring (re)initialization shall initiate the Claim Token process. In this process one or more MACs bid for the right to initialize the ring by continuously transmitting Claim Frames. Each MAC also looks for incoming Claim Frames and compares the received bid with the MAC's own bid. Any MAC receiving a lower bid shall (re)enter the bidding, while any MAC receiving a higher bid shall yield. Conflicting bids shall be resolved by an arbitration hierarchy as follows:

a) The bid with the lowest Target-Token Rotation Time (TTRT) has precedence (i.e., the numerically highest T_Bid value).

b) Given equal T_Bid values, the bid with the longest address has precedence (i.e., FC.L = 1 > FC.L = 0).

c) Given equal T_Bid and L values, the bid with the highest address has precedence (i.e., the numerically highest SA value).

The Claim Token process completes when one MAC receives its own Claim Frames after the frames have passed around the ring. At this point the ring is filled with that MAC's Claim Frames and all other MACs have yielded. The winning MAC proceeds to initialize the ring (see 8.1.5.2). These rules permit a given installation to give certain stations preferential status in ring recovery, but do not require it.

Each MAC times the Claim Token process by setting the Token-Rotation Timer (TRT) to a large value (T_Max) that is sufficient to permit stable ring recovery. TRT shall be reset to this value upon entering the Claim Token process, but shall not be reset once a MAC has left the Claim Token process until the ring becomes operational (see 8.1.5.2). If TRT expires while a MAC is in the Claim Token process, the Claim Token process has failed to recover the ring. At this point, intervention that is external to MAC may be required, and the MAC shall initiate the Beacon process (see 8.1.5.3). If TRT expires after a MAC has left the Claim Token process and is waiting for some other MAC to initialize the ring, this MAC shall re-enter the Claim Token process. This mechanism ensures that spurious Beacon or preemptive Claim Frames will not persist on the ring, since at least one Beacon or Claim Frame has to be received to leave the Claim Token process.

Copyright International Organization for Standardization
Reproduced by IHS under license with ISO
No reproduction or networking permitted without license from IHS Not for Resale

An alternate mechanism is used in FDDI-II rings by the Cycle Master to Claim Token. The Cycle Master is designed to be the first station to recognize loss of the token; and upon detection of token loss, its MAC sends Purge Frames instead of Claim Frames. The Purge is similar to the Claim in that it includes a T_bid value which is used to determine T_neg in MACs on the ring. The Cycle Master transmits purge frames until it receives its own purge frames which completes the Claim Token process without stations leaving hybrid mode. If the Cycle Master fails to complete the Claim Token process while operating in hybrid mode, the Cycle Master station will eventually initiate the Beacon process or some other station will initiate the Claim process. The Beacon or Claim frames cause all stations to revert to basic mode, including the Cycle Master. The Beacon or Claim Token process then continues as described.

8.1.5.2 Initialization process

Within each MAC, the Boolean variable Ring_Operational indicates the current operating status of the ring. Ring_Operational is cleared whenever the MAC initiates or detects the Claim, Purge or Beacon processes on the ring, and when it receives a MAC_Reset request from SMT (see 6.4.2). Whenever Ring_Operational is cleared (including subsequent MAC_Resets), any (SM_)MA_UNITDATA.request or (SM_)MA_TOKEN.request currently being serviced is aborted, no token is issued, and an abnormal confirm status is returned to the requester.

Ring initialization begins when one MAC successfully completes the Claim Token or Purge process. That MAC proceeds to initialize the ring. First, it sets the operative TTRT value (T_Opr) to the negotiated TTRT value (T_Neg) (which should be the same as its requested TTRT value (T_Req) since this MAC won the bidding). Then it resets its Token-Rotation Timer (TRT). Finally it issues an initial non-restricted token.

The purpose of the initial rotation of the token is to align both the TTRT values and the TRT timers in all MACs on the ring. Since Ring_Operational is clear, no MAC may capture the initial token or transmit frames. In each MAC upon receipt (and repeating) of the initial token, T_Opr shall be set to T_Neg, TRT shall be reset, Late_ct shall be set = 1, and Ring_Operational shall be set. These actions permit synchronous transmission on the second token rotation while inhibiting asynchronous transmission. Beginning with the second token rotation, each MAC correctly accumulates current synchronous bandwidth utilization (as opposed to allocated limits) in TRT, and asynchronous transmission is possible on the third and subsequent token rotations (see 8.1.4.2).

8.1.5.3 Beacon process

When a MAC detects that the Claim Token process has failed, or upon request from SMT (see 6.4.2), that MAC initiates the Beacon process. In this case, the ring has probably been physically interrupted, and may have been globally reconfigured (e.g., one logical ring may have been partitioned into two, or two logical rings may have been joined into one). Some form of intervention that is external to MAC has been or should be invoked to restore the logical ring. The purpose of the Beacon process is to signal to all remaining MACs that a significant logical break has occurred and to provide diagnostic or other assistance to the restoration process (via SMT).

Copyright International Organization for Standardization
Reproduced by IHS under license with ISO
No reproduction or networking permitted without license from IHS Not for Resale

Upon entering the Beacon process, a MAC continuously transmits Beacon Frames. A MAC yields to Beacon Frames received from an upstream MAC. Consequently, if the logical break persists, the Beacon Frames of the MAC immediately downstream from the break are normally propagated. If a MAC in the Beacon Process receives its own Beacon Frames, it assumes that the logical ring has been restored, and it initiates the Claim Token process to recover the ring quickly.

As with the Claim Token process, a MAC shall reset TRT upon entering the Beacon process, but not upon receipt of individual Beacon or Claim frames. If TRT expires after a MAC has left the Beacon process, this MAC shall enter the Claim Token process to remove spurious Beacon Frames. In conjunction with the normal frame-stripping function, these rules ensure that the ring can be recovered efficiently and reliably when the logical break is restored. However, they result in a brief interruption of Beacon Frame propagation through MACs not immediately downstream of a logical break once every T_Max. This phenomenon does not compromise MAC, and it is easily filtered in the SMT Beacon processing logic.

8.2 Structure

MAC consists of two cooperating asynchronous processes, the MAC Receiver and the MAC Transmitter, within each MAC. Both of these processes operate on the symbol stream, and they are synchronized by global MAC variables (e.g., T_Opr) and signals (e.g., TK_Received, My_Claim).

The need for separate Receiver and Transmitter processes arises from the requirement that certain functions (specifically, recognition of MAC frames, own address detection, and capture of the Frame Status) shall be performed concurrently with, and asynchronously to the states of, the Transmitter. In cases where identical functions are needed by both processes (e.g., delimiter recognition and input validation), they have been placed in the Receiver with appropriate signals sent to the Transmitter. These signals may be replaced by their corresponding functions in the Transmitter.

It is also desirable that a station be capable of self-monitoring, both to facilitate loop-back testing and to avoid compromising ring integrity unnecessarily; thus the error detection functions are specified in the Receiver while the recovery functions are specified in the Transmitter.

The MAC processes are defined as cooperating state machines. It is assumed that time elapses only within discrete states, and that state transitions are logically instantaneous. It follows that actions requiring one or more symbol times to complete shall be performed within states; however, when these actions are associated with a specific transition, they may be described as part of that transition. In all such cases the actions occur prior to the associated transition. Actions described as part of a state occur each time the state is entered. Thus, when a triggering event occurs externally to a state machine, the state machine shall perform the following event-processing sequence as a logically atomic operation:

a) Evaluate all conditions within the current state.

b) If the conditions for a state transition are satisfied, then

   1) perform the transition actions in the current state.

   2) enter the new state.

   3) perform the entry actions (if any) for the new state.

   4) if an immediate transition from the new state is possible, then repeat the sequence beginning with step 1.

Copyright International Organization for Standardization
Reproduced by IHS under license with ISO
No reproduction or networking permitted without license from IHS Not for Resale

c) If the conditions for in-state actions are satisfied, then the specified actions shall be performed.

The major triggering event to the MAC Receiver is the occurrence of a PH_UNITDATA.indication. The Receiver shall perform its event processing sequence, using the input symbol presented with the PH_UNITDATA.indication as a parameter for condition evaluation. Upon completion of the event processing sequence in the Receiver, both the input symbol and any associated event signals generated by Receiver actions shall be forwarded to the MAC Transmitter.

Event propagation from the MAC Receiver to the MAC Transmitter shall incur a conceptual propagation delay representing the internal MAC repeat delay of the station. The input symbol and any associated event signals generated by the Receiver actions experience identical propagation delay between Receiver and Transmitter. Consequently, they arrive at the Transmitter at the same conceptual time, but in the order that they were generated by the Receiver.

The major triggering event to the MAC Transmitter is the arrival of an input symbol, together with any associated event signals, from the MAC Receiver; i.e., for each input symbol the Transmitter shall generate a corresponding output symbol. The Transmitter performs its event-processing sequence, but uses the input symbol forwarded from the Receiver as a parameter for condition evaluation only when it is potentially repeatable; i.e., within the Repeat State. Upon completion of the event processing sequence in the Transmitter, a PH_UNITDATA.request with the appropriate output symbol is generated as an in-state action in the resultant Transmitter state. In the Repeat State, the output symbol shall typically be the input symbol from the Receiver; in all other states, the input symbol is discarded and a new output symbol is generated.

It is also assumed that the contents of specific fields in received and transmitted PDUs are only known to MAC during the processing of the PDUs. Any values to be remembered shall be saved in MAC variables.

The MAC state machines are specified both with prose and with state diagrams. In the event of any discrepancy, the state diagrams and attached notes shall take precedence over prose; however, the prose may explicitly define optional conditions and actions not shown in the state diagrams.

State transitions shall occur when the conditions are satisfied according to the evaluation rules specified in this subclause, except when explicit exceptions are specified in the prose descriptions.

In the state diagrams, states are shown as vertical staffs and state transitions as horizontal arrows, with the triggering event or condition above the shaft and any action beneath the shaft. Symbols are used in the conditions, actions, and footnotes for logical operations with the following meanings: or |, and &, not ~. Optional conditions or actions are delimited by matched pairs of { }, and comments are delimited by matched pairs of « ». The condition ‘before’ shall be true whenever the last symbol of the referenced PDU field has not been processed. The condition ‘after’ shall be true whenever the last symbol of the referenced PDU field has been processed, and shall be true before the next symbol. The condition ‘else’ shall be true whenever the referenced condition is true and no other transition conditions are satisfied.

Copyright International Organization for Standardization
Reproduced by IHS under license with ISO
No reproduction or networking permitted without license from IHS Not for Resale

8.3 Receiver

This subclause describes the detailed MAC Receiver operation as shown in figure 3.

The MAC Receiver process receives and validates information from the ring, selects those portions that are relevant to its station, detects ring errors and failures, and reports them via appropriate signals. The Receiver scans the input from PHY (PH_Indication), looking for valid frames (FR) and tokens (TK). Each frame whose Destination Address (DA) matches one of the Station_Addresses shall be passed to the appropriate entity (LLC, MAC, or SMT) with the frame validity status. MAC frames shall be processed by the Receiver after validation. A Valid-Transmission Timer (TVX) shall be maintained to detect ring failures. Appropriate signals shall be generated for the Transmitter process, and the current T_Bid_Rc and T_Neg and Frame Status Indicators, A_Flag, C_Flag, E_Flag, and N_Flag shall be saved for the transmitter. Counts of frames (e.g., Frame_ct, Error_ct and Lost_ct) shall also be maintained for SMT.

8.3.1 Token and frame validity criteria

For purposes of classifying and taking action as the result of a received token or frame, the following criteria are applied:

a) Token (included in Token_ct):
   1) has a Starting Delimiter (JK).
   2) has an FC = 1X00 0000.
   3) has no additional Data Symbols (n).
   4) has a Token Ending Delimiter (TT).

b) Frame (included in Frame_ct):
   1) has a Starting Delimiter (JK).
   2) has an FC other than 1X00 0000.
   3) has zero or more additional Data Symbols (n).
   4) has an Ending Delimiter (T). An implementation may optionally require that the Ending Delimiter be the first symbol of a symbol pair.

c) Format Error (included in Lost_ct):
   1) has a Starting Delimiter (JK).
   2) has zero or more Data Symbols (n).
   3) is not a Token.
   4) is not a Frame.
   5) ends with a symbol other than Idle (I) as its first non-data symbol.

d) Start of Void Sequence (may or may not be a valid frame, but contains no MAC SDU):
   1) has a Starting Delimiter (JK).
   2) has an FC = 0X00 0000.

e) Valid Data Length:
   1) is an integral number of Data Symbol pairs (octets) between Starting and Ending Delimiters.
   2) is a minimum number of octets between Starting and Ending Delimiters as shown in table 1.

Copyright International Organization for Standardization
Reproduced by IHS under license with ISO
No reproduction or networking permitted without license from IHS Not for Resale

f) Valid Frame:

1) is a Frame.

2) has a Valid Data Length.

3) has an FC = XX10 XXXX, or has correct FCS.

4) has an Error Detected Indicator of Reset (Er = R).

g) Frame Error (set E_Flag):

1) is a Frame.

2) is not a Valid Frame.

h) Reportable Frame Error (included in Error_ct):

1) is a Frame Error.

2) the Error Detected Indicator either was not received or was received as Reset (Er = R).

8.3.2 State R0: LISTEN

When a MAC Receiver is initialized, it enters the Listen State. In this state, the receiver waits for a valid symbol from PHY, and the Valid-Transmission Timer (TVX) is disabled.

A PH_Indication(I) represents the start of signalling reception upon which clock synchronization may be established. A transition to the Listen State represents a potential discontinuity in the processing of the input symbol stream.

R(00): Reset: A transition to State R0 occurs if a MAC_Reset signal (see 6.4.2.3) is received. On this transition, the negotiated TTRT (T_Neg) may optionally be set to the maximum TTRT supported by this MAC (T_Max).

R(01): Signal Start: If PH_Indication(I) is received from PHY, or when PH_Invalid is not being received from PHY in Hybrid mode, the Valid-Transmission Timer (TVX) shall be reset and enabled, and a transition to State R1 occurs.

8.3.3 State R1: AWAIT_SD (Await Starting Delimiter)

In this state, the receiver looks for a valid start of a frame or token (PH_Indication(J)). Input received during other receiver states is not excluded, since invalid input in those states may prove to be valid starting delimiters upon return to this state. The test for the Start condition only occurs in this state.

R(10a): Reset: A transition to State R0 occurs if a MAC_Reset signal is received. On this transition, Last_FC is set to zero, and the negotiated TTRT (T_Neg) may optionally be set to the maximum TTRT supported by this MAC (T_Max).

R(10b): Invalid: A transition to State R0 occurs if a PH_Invalid is received from PHY.

R(12): Start: If PH_Indication(J) is received, a transition to State R2 occurs. On this transition, the RC_Start signal is generated. The address recognized (A_Flag), frame copied (C_Flag), error detected (E_Flag), higher source address (H_Flag), lower source address (L_Flag), my source address (M_Flag), and no copy acknowledgment (N_Flag) flags shall be cleared.

Copyright International Organization for Standardization
Reproduced by IHS under license with ISO
No reproduction or networking permitted without license from IHS Not for Resale

Table 1 – Interpretation of FC field

FC	Interpretation	Minimum Octets
CLFF WXYZ to WXYZ		
1X00 0000	Token	1
0000 0000	Void frame	9
0100 0000	Void frame	17
0000 0001 to 1111	SMT frame	9
0100 0001 to 1111	SMT frame	17
1000 0001 to 1111	MAC frame	13
1100 0001 to 1111	MAC frame	21
X001 XXXX	LLC frame	9
X101 XXXX	LLC frame	17
X010 XXXX	Implementor frame	9
X110 XXXX	Implementor frame	17
X011 XXXX	Reserved	9
X111 XXXX	Reserved	17

8.3.4 State R2: RC_FR_CTRL (Receive Frame Control Field)

In this state, the receiver scans the received symbols for a start of frame or start of token sequence consisting of the start delimiter followed by two data symbols (JKnn). The appropriate valid header exit is chosen based upon the received frame control field. Valid FCSr is reset in preparation for checking the incoming frame.

R(20a): Reset: A transition to State R0 occurs if a MAC_Reset signal is received. On this transition, Last_FC is set to zero, and the negotiated TTRT (T_Neg) may optionally be set to the maximum TTRT supported by this MAC (T_Max).

R(20b): Invalid: A transition to State R0 occurs if PH_Invalid is received from PHY. On this transition, the FO_Error signal shall be generated and the Lost_ct shall be incremented.

R(21a): Strip: A transition to State R1 occurs if PH_Indication(I) is received from PHY or if PH_Indication (K) is not the next symbol received after transition R(12). On this transition, the FR_Strip signal shall be generated.

R(21b): Format Error: This transition to State R1 occurs if a symbol sequence other than I or nn is received from PHY after receipt of the K symbol. On this transition, the FO_Error signal shall be generated and the Lost_ct shall be incremented. This transition shall prevent the Transmitter from repeating the symbol or symbol pair that caused detection of the format error.

If the transition R(21a) or R(21b) is caused by the receipt of another J symbol, such as the sequences JJ, JKJ, or JKnJ, and the Receiver is capable of processing a Start of Frame sequence with a zero-length Preamble, then the transition to State R1 and back to State R2 shall be considered as taking zero time, such that the second J symbol is interpreted as the potential start of a valid frame sequence.

R(23): Frame: After a starting delimiter and FC field (JKnn) have been received; a transition to State R3 occurs if the received FC field (FCr) indicates a frame start (i.e., not token).

--`,,`-`-`,,`,,`,`,,`---

Copyright International Organization for Standardization
Reproduced by IHS under license with ISO
No reproduction or networking permitted without license from IHS Not for Resale

R(25): Token: After a starting delimiter and FC field (JKnn) have been received a transition to State R5 occurs if a possible token is being received.

8.3.5 State R3: RC_FR_BODY (Receive Frame Body)

In this state the receiver scans the received frame body, including Destination Address (DA), Source Address (SA) and INFO fields and takes actions as appropriate. Also, in this state the receiver scans the remainder of the frame up to the reception of an Ending Delimiter (T symbol) and checks FCS. If a MAC Frame is indicated by the FC field, the receiver takes actions as appropriate.

The Destination Address shall be processed as follows:

a) If the L Bit in the received FC field (FCr.L) is equal to zero, indicating a 16-bit address, and if the Destination Address received (DAr) is contained in the set of this MAC's Short Addresses, then the A_Flag is set and the frame is copied to the appropriate entity (LLC, SMT, or other MAC user) as indicated by the Frame Control field received (FCr). The A_Flag shall not be set for a partially filtered group address match, although the frame may be copied. If the A_Flag is set and the received Frame Control field (FCr) indicates an SMT next station addressing frame, then N_Flag shall be set. A void frame is not required to be copied.

b) If the L Bit in the received FC field (FCr.L) is equal to one, indicating a 48-bit address, and if the Destination Address received (DAr) is contained in the set of this MAC's Long Addresses, then the A_Flag is set and the frame is copied to the appropriate entity (LLC, SMT, or other MAC user) as indicated by the Frame Control field received (FCr). The A_Flag shall not be set for a partially filtered group address match, although the frame may be copied. If the A_Flag is set and the received Frame Control field (FCr) indicates an SMT next station addressing frame, then N_Flag shall be set. If a transparent bridge copies a frame for forwarding, it may optionally set the N_Flag. A void frame is not required to be copied.

The Source Address shall be processed as follows:

a) If the L Bit in the received FC field (FCr.L) is equal to zero, indicating a 16-bit address, and if the Source Address received (SAr) is equal to this MAC's My Short Address (MSA), and MSA is enabled

   1) FR_Strip signal shall be generated.

   2) If the Source Address received (SAr) is not equal to zero then the MAC shall set M_Flag.

b) If the L Bit in the received FC field (FCr.L) is equal to one, indicating a 48-bit address, and if the Source Address received (SAr) is equal to this MAC's My Long Address (MLA) and MLA is enabled

   1) FR_Strip signal shall be generated.

   2) If the Source Address received (SAr) is not equal to zero then the MAC shall set M_Flag.

c) If the L Bit received (FCr.L) is equal to zero, and if the Source Address received (SAr) is greater than this MAC's My Short Address (MSA) or MSA is disabled, and this MAC's My Long Address is disabled or enabled as the Null address; or if the L Bit received (FCr.L) is equal to one, and if the Source Address received (SAr) is greater than this MAC's My Long Address (MLA) or MLA is disabled, then H_flag shall be set.

Copyright International Organization for Standardization
Reproduced by IHS under license with ISO
No reproduction or networking permitted without license from IHS Not for Resale

d) If the conditions in a, b, or c above are not satisfied, and the Source Address received (SAr) is not zero, then L_Flag shall be set.

The first four octets of the INFO field shall be processed as follows:

a) If the Frame Control Field received indicates that this frame is a MAC Claim Frame (FC = 1L00 r011), or Purge Frame (FC = 1L00 r100) then the first four octets of this frame's INFO field contains the bidding TTRT received (T_Bid_Rc) from an upstream MAC. If the T_Bid_Rc is not equal to this MAC's requested TTRT (T_req):

   1) If M_Flag is set, then clear A_Flag.

   2) If the T_Bid_Rc is greater than this MAC's requested TTRT (T_req), and L_Flag is set:

      - H_Flag is set.

      - L_Flag is cleared.

   3) If the T_Bid_Rc is less than this MAC's requested TTRT (T_req), H_Flag is set, and a non-Null MSA or MLA is enabled:

      - L_Flag is set.

      - H_Flag is cleared.

b) If the FCr indicates a Claim Frame and the previous SA and INFO processing rules do not cause H_Flag to be set (or remain set) then the MAC shall signal FR_Strip.

If a station implements reception of source routing frames as a bridge, the frame is addressed as a source routing frame (FCr.L = 1 and SAr.RI = 1), and if the frame is not a MAC or SMT frame (FCr.FF $\neq$ 00) and an address match is found in the routing information field of the frame:

a) A_Flag is set.

b) Copy the frame.

Additional optional criteria may be applied to further control frame copying (see 6.4.2). These criteria affect the operation of the MAC data service interface but they do not affect the setting of flags or indicators or other MAC interoperability requirements. Consequently, they are not further specified in the Receiver state machine.

R(30a): Reset: A transition to State R0 occurs if a MAC_Reset signal is received. On this transition, Last_FC is set to zero, and the negotiated TTRT (T_Neg) may optionally be set to the maximum TTRT supported by this MAC (T_Max).

R(30b): Invalid: A transition to State R0 occurs if a PH_Invalid is received from PHY. On this transition, the FO_Error signal shall be generated and the Lost_ct shall be incremented.

R(31a): Strip: A transition to State R1 occurs if PH_Indication(I) is received from PHY. On this transition, the FR_Strip signal shall be generated.

R(31b): Format Error: This transition to State R1 occurs if a symbol other than I or data is received before an Ending Delimiter (T). Optionally, this transition occurs if a valid data length (see 8.3.1) has not been received. In basic mode, however, this transition shall not occur when the Ending Delimiter of a Void frame is received after any even number of data symbols. On this transition, the FO_Error signal shall be generated, and if the transition is not because of a PH_Indication(T) (i.e. invalid data length), then the Lost_ct shall be incremented. This transition shall prevent the Transmitter from repeating the symbol or symbol pair that caused detection of the format error.

Copyright International Organization for Standardization
Reproduced by IHS under license with ISO
No reproduction or networking permitted without license from IHS Not for Resale

R(34): ED Received: A transition to State R4 occurs if PH_Indication(T) is received. This transition is not required to occur if the option for treating an invalid data length as a format error is implemented in R(31b) and a valid data length has not been received; however, this transition shall occur in basic mode when the Ending Delimiter of a Void frame is received after any even number of data symbols.

8.3.6 State R4: RC_FR_STATUS (Receive Frame Status)

In this state the receiver scans for trailing control indicator symbols (R or S) representing the Error Detected (E), Address Recognized (A), and Frame Copied (C) control indicators, and subsequent optional indicators. The condition for return to State R1 may be satisfied upon detection of the first symbol after the E indicator that is not a control indicator, and shall be satisfied upon the detection of a trailing T symbol. If the terminating symbol is a T symbol, it is a candidate for being repeated by the MAC transmitter as the last symbol of frame status.

NOTE - One way to align the timing of the above conditions so that the MAC transmitter need not be sensitive to what is occurring is to implement a substate within State R4 which is entered only upon detection of a trailing T symbol. The MAC receiver would then transition to State R1 at the next symbol boundary, regardless of what symbol is presented. While in this substate, if either condition for transition to State R0 is satisfied, that transition (40a or 40b) would still continue to take precedence.

The receiver performs final validity checking on the frame, and determines the control indicator values that the Transmitter should transmit in the process of repeating the frame. On entry into the state, the Frame_ct is incremented and the E_Flag is set. Each of the required control indicators is processed as follows:

a) If the E indicator received (Er) is not an R symbol, or the frame did not have a valid data length, or the FCS received is not valid (unless the frame is an implementor frame), then the frame is considered in error.

   1) Clear A_Flag, H_Flag, L_Flag, M_Flag, and N_Flag.

   2) For backward compatibility, if a Void frame is received in basic mode and the E indicator is an R symbol, then reset TVX and clear the E_Flag.

b) If Er is an R symbol, and the frame has a valid data length, and the FCS received is valid (or the frame is an implementor frame), then the frame is valid.

   1) Reset TVX and clear the E_Flag.

   2) If A_Flag is set or the N_Flag is set, and the frame has been successfully copied (Frame copied)

      - Set C_Flag

      - If the frame is not a MAC or Void frame, increment Copied_ct (if implemented).

If the frame is a valid frame then the receiver also produces signals to the Transmitter for MAC and Void frames as follows:

a) If the FCr indicates a Beacon Frame then:

   1) The MAC optionally sets T_neg to T_max.

   2) If M_Flag is set then the receiver signals My_Beacon.

   3) If M_Flag is not set then the receiver signals Other_Beacon.

   4) A station shall also disable service for synchronous and restricted requests.

Copyright International Organization for Standardization
Reproduced by IHS under license with ISO
No reproduction or networking permitted without license from IHS Not for Resale

b) If the FCr indicates a Claim Frame, then:

   1) If H_Flag is set then T_neg is loaded with T_Bid_rc. The receiver may optionally test the T_Bid_rc to verify it is within range of operational bounds for this MAC (i.e., T_max ≤ T_Bid_rc ≤ T_min) and notify SMT when an invalid T_bid has been received. The receiver signals Higher_Claim.

   2) If A_Flag and M_Flag are set then T_neg is loaded with T_Bid_rc. The receiver may optionally test the T_Bid_rc to verify it is within range of operational bounds for this MAC (i.e., T_max ≤ T_Bid_rc ≤ T_min) and notify SMT when an invalid T_bid has been received. The receiver signals My_Claim.

   3) If neither the H_Flag nor the M_Flag is set, and a non-Null MSA or MLA is enabled, then the receiver shall signal Lower_Claim.

c) If the FCr indicates a Purge Frame then the receiver may optionally perform the following:

   1) If H_Flag or L_Flag are set then T_neg is loaded with T_Bid_rc. The receiver may optionally test the T_Bid_rc to verify it is within range of operational bounds for this MAC (i.e., T_max ≤ T_Bid_rc ≤ T_min) and notify SMT when an invalid T_bid has been received. The receiver signals Other_Purge.

   2) If A_Flag and M_Flag are set then T_neg is loaded with T_Bid_rc. The receiver may optionally test the T_Bid_rc to verify it is within range of operational bounds for this MAC (i.e., T_max ≤ T_Bid_rc ≤ T_min) and notify SMT when an invalid T_bid has been received. The receiver signals My_Purge.

d) If the FCr indicates a Void Frame then the receiver may optionally perform the following:

   1) If M_Flag is not set, then signal Other_Void.

   2) If M_Flag and A_Flag are set, then signal My_Void.

The received A Indicator is also processed.

a) If Ar is an R symbol then the MAC is the first MAC on the ring to recognize the address. N_Flag is cleared, allowing the transmitter to set the C Indicator (Cx) if the frame was successfully copied (Otherwise, if Ar is not an R symbol and the N_Flag was set, then the transmitter will not acknowledge copying of this frame.).

b) If Ar is an S symbol then the receiver tests for recognition of a possible duplicate address on the ring. This is indicated by the A_Flag being set, and the E_Flag being reset, and the Destination Address of the frame being an individual address (DAr.IG = 0), and either the frame is a MAC or SMT frame (FCr.FF = 0) or the Routing Indicator bit is clear (SAr.RI = 0). SMT is notified of a duplicate address.

R(40a): Reset: A transition to State R0 occurs if a MAC_Reset signal is received. On this transition, Last_FC is set to zero, and the negotiated TTRT (T_Neg) may optionally be set to the maximum TTRT supported by this MAC (T_Max).

R(40b): Invalid: A transition to State R0 occurs if PH_Invalid is received from PHY. On this transition, the FR_Received signal shall be generated and, if the E_Flag is set and the Error Detected Indicator (Er) was not received as Set, then the Error_ct shall be incremented. If the received frame was a valid MAC frame then the R_Flag shall be cleared, MAC_Frame is signalled to the transmitter, and Restricted service is disabled (if implemented).

If a valid frame (E_Flag is not set) was addressed to this MAC (A_Flag is set), the frame was not sent by this MAC (M_Flag is not set), frame acknowledgment is not inhibited (N_Flag is not set), the frame was not successfully copied (C_Flag is not set), and the frame was not a void or MAC frame, then increment Not_Copied_ct (if implemented).

Copyright International Organization for Standardization
Reproduced by IHS under license with ISO
No reproduction or networking permitted without license from IHS Not for Resale

R(41): Frame Received: After reception of the received Frame Status field (FSr), a transition to State R1 occurs. On this transition, the FR_Received signal shall be generated and, if the E_Flag is set and the Error Detected Indicator (Er) was not received as Set, then the Error_ct shall be incremented. If the received frame was a valid MAC frame then the R_Flag shall be cleared, MAC_Frame is signalled to the transmitter, and Restricted service is disabled (if implemented).

If a valid frame (E_Flag is not set) was addressed to this MAC (A_Flag is set), the frame was not sent by this MAC (M_Flag is not set), frame acknowledgment is not inhibited (N_Flag is not set), the frame was not successfully copied (C_Flag is not set), and the frame was not a void or MAC frame, then increment Not_Copied_ct (if implemented).

8.3.7 State R5: CHECK_TK (Check Token)

In this state, the receiver looks for a valid token ending delimiter (TT). Both T symbols shall be repeated by the MAC transmitter when the token is being repeated by the MAC.

> NOTE - To align the timing of the above condition to the symbol being repeated in a fashion consistent with the repeating of the symbols of frame status in State R4, a substate may be implemented within State R5, which is entered upon detection of the second T symbol. The MAC receiver would then transition to R1 via R(51c) at the next symbol boundary, regardless of what symbol is presented. While in this substate, if either condition for transition to State R0 is satisfied, that transition (50a or 50b) would still continue to take precedence.

R(50a): Reset: A transition to State R0 occurs if a MAC_Reset signal is received. On this transition, Last_FC is set to zero, and the negotiated TTRT (T_Neg) may optionally be set to the maximum TTRT supported by this MAC (T_Max).

R(50b): Invalid: A transition to State R0 occurs if a PH_Invalid is received from PHY. On this transition, the FO_Error signal shall be generated and the Lost_ct shall be incremented.

R(51a): Strip: A transition to State R1 occurs if PH_Indication(I) is received from PHY. This transition shall occur if PH_Indication(I) is received from PHY before PH_Indication(T) is received from PHY, and may optionally occur if PH_Indication(I) is received from PHY after PH_Indication(T) is received from PHY. On this transition, the FR_Strip signal shall be generated.

R(51b): Format Error: This transition to State R1 occurs if any symbol other than I or T is received. This transition may optionally occur if PH_Indication(I) is received from PHY after PH_Indication(T) is received from PHY. On this transition, the FO_Error signal shall be generated and the Lost_ct shall be incremented. This transition shall prevent the Transmitter from repeating the symbol or symbol pair that caused detection of the format error.

R(51c): Token Received: A transition to State R1 occurs if a correct token Ending Delimiter (TT) is received. If the Token_class of the received token is nonrestricted, then the R_Flag shall be cleared and TVX shall be reset; otherwise, if the R_Flag is not already set, then the R_Flag shall be set and an SM_MA_Status.indication should be optionally generated to permit SMT to monitor the duration of the restricted token dialogue. In restricted token mode, TVX shall not be reset unless a valid Frame is received. In any case, the Token_Received (TK_Received) signal shall be generated for the Transmitter, and the optional Token_ct shall be incremented.

--`,,`-`-`,,`,,`,`,,`---
Copyright International Organization for Standardization
Reproduced by IHS under license with ISO
No reproduction or networking permitted without license from IHS Not for Resale

8.4 Transmitter

This subclause describes the overall MAC Transmitter operation as shown in figure 4.

The MAC Transmitter process repeats information from other stations on the ring, inserts information from its own station into the ring, and cooperates with other stations to coordinate priorities for use of the ring. It operates on the input symbol stream from PHY (PH_Indication) and produces the output symbol stream to PHY (PH_Request). The Transmitter repeats the received frames until it needs and receives a usable token. Then it transmits its own data, passes the token, and resumes repeating. The Transmitter also transmits Claim or Purge Frames when required to recover the ring. The operation of the Transmitter is synchronized by the signals generated by the Receiver; the Transmitter also uses the Frame Status (A_Flag), C_Flag, and E_Flag) values saved by the Receiver. The Transmitter maintains the current operating value of the ring Target Token Rotation Time (T_Opr) and the Token-Rotation Timer (TRT) to ensure correct ring scheduling.

8.4.1 State T0: TX_IDLE (Transmitter Idle)

When a MAC transmitter is initialized, it enters the TX_Idle state. In this state the transmitter sends continuous Idle symbols (I). The Transmitter reverts to this state between repeated frames and tokens, to capture a token, and to strip frames that have circulated the ring.

T(00): Reset: A transition to State T0 occurs when transmitter reset is required. Reset shall be required when any of the following conditions occurs:

a) An SM_MA_CONTROL.request(reset_mac or send_mac_frames) is received from SMT.

b) A MAC Frame is received when full recovery is enabled, and either Ring_Operational is set, or the Late_ct is zero, or the Token_Class is not equal to none and the MAC frame received was neither My_Claim nor My_Purge.

On this transition, the operational Target Token Rotation Time (T_Opr) shall be set to T_Max, TRT shall be reset to T_Opr and Token_Class shall be reset to none. If reset_mac was requested, then Late_ct shall be cleared to zero and Ring_Operational and D_Flag shall be cleared. Otherwise, if Ring_Operational is set or Late_ct is clear, then Late_ct shall be set to 1 and Ring_Operational shall be cleared. In any case, B_Flag shall be cleared (if restricted mode is implemented) and alternative stripping (bridge stripping) shall cease.

This transition shall take precedence over the recovery transition if their respective conditions occur simultaneously.

T(01): Start: A transition to State T1 occurs after the receiver detects the beginning of a starting delimiter (RC_Start signal). RC_Start received during other transmitter states is not necessarily ignored, since transitions to the TX_Idle State may immediately encounter the receiver start condition upon return to the TX_Idle State, i.e., the TX_Idle State may be traversed in zero time; however, the reaction to RC_Start only occurs in the TX_Idle state.

This transition is optionally not required when partial recovery is enabled in which case the entire PDU is stripped.

T(02a): Usable Token: A transition to State T2 occurs when the receiver signals the receipt of a valid token (TK_Received), and the token is usable. A token is usable when the ring is operational (Ring_Operational) and either:

a) The station has a synchronous request queued for transmission and synchronous service is allowed, or

Copyright International Organization for Standardization
Reproduced by IHS under license with ISO
No reproduction or networking permitted without license from IHS Not for Resale

b) The token is early (Late_ct=0) and all of the following conditions exist:

   1) The station has an asynchronous request queued.

   2) The correct type of token was received (FCr.L = Requested_Token_Class) .

   3) Asynchronous priorities are not implemented or TRT is less than the T_pri threshold for the requested priority.

   4) The request is not a restricted request, or if the request is restricted, restricted service is enabled and either B_Flag is set or the Requested_Token_Class is restricted.

At this point, the token has been successfully captured. The Token-Holding Timer (THT) is disabled. If the token is early (Late_ct=0), then the Token-Rotation Timer (TRT) value is saved in THT and TRT is reset to T_opr and if implemented, T_Flag is set. Otherwise, THT is set to its expired value and Late_ct is cleared, allowing TRT to retain the accumulated lateness, and T_Flag is cleared if implemented. Token_Class is set to non-restricted if FCr.L is equal to zero; if FCr.L is equal to one, it is set to restricted. Finally, the transition to State T2 occurs.

A single TK_Received signal shall cause at most one transition in the Transmitter, i.e., this transition cannot immediately follow T(10b).

This transition shall not occur when partial recovery is enabled. In this case the Token is ignored.

T(02b): Transmit Immediate: A transition to State T2 occurs when an immediate request is queued, the ring is not operational and the Token_Class is none. TRT is reset to T_Opr, and Late_ct is cleared to enable the transmission to complete.

T(03): Unusable Token: A transition to State T3 occurs when the Receiver signals the receipt of a valid token (TK_Received) and the token is not usable (see T(02)). At this point, the token has been inadvertently captured (due to a short latency ring or timing window) and shall be reissued. If the ring is already operational (Ring_Operational), and if the token is early (Late_ct=0), the Token-Rotation Timer (TRT) shall be reset to the Target Token Rotation Time (T_Opr). If the ring is operational and Late_Ct is not equal to zero, Late_ct shall be cleared but TRT is not reset to allow the MAC to retain the accumulated lateness. If the ring is not already operational, T_Opr shall be set to the final negotiated Target Token Rotation Time (T_Neg), TRT is reset to the new value of T_Opr, Late_ct is set equal to one and Ring_Operational is set.

If the received token was restricted (FCr.L = 1), then B_Flag is cleared and Token_Class is set to restricted. Otherwise, B_Flag is set and Token_Class is set to non-restricted. Finally, the transition to State T3 occurs.

A single TK_Received signal shall cause at most one transition in the Transmitter, i.e., this transition cannot immediately follow T(10b).

This transition shall not occur when partial recovery is enabled. In this case the Token is ignored.

T(04): Recovery: A transition to State T4 occurs when ring recovery is required. Recovery shall be required when any of the following conditions occurs:

a) The Valid-Transmission Timer (TVX) expires when full recovery is enabled and HM_mode is not slave (or Hybrid mode is not implemented).

b) TRT expires and the token is already late (Late_ct>0) and either, HM_mode is not slave (or Hybrid mode is not implemented), or the ring is not operational (~Ring_Operational) and the Token_Class is none.

Copyright International Organization for Standardization
Reproduced by IHS under license with ISO
No reproduction or networking permitted without license from IHS Not for Resale

c) If Hybrid mode is implemented, and HM_mode is master, and the ring is not operational (~Ring_Operational), and the Token_Class is none.

d) A Claim Frame with a lower precedence is received (Lower_Claim) when full recovery is enabled.

e) Immediately after the Reset transition when SM_MA_CONTROL.request (Claim) is received.

The recovery transition conditions are asynchronous to the normal operation of the Transmitter. Therefore, these conditions may occur at the same time as the conditions for some other transition. If this happens the other transition shall take precedence. However, the recovery transition conditions (e.g., timer expiration) shall be "remembered" unless the pre-empting transition causes them to be cleared (e.g., timer reset).

T(05): Beacon Requested: A transition to State T5 occurs immediately after the Reset transition when SM_MA_CONTROL.request (Beacon) is received.

8.4.2 State T1: REPEAT (Repeat)

In this state the transmitter generally repeats the input symbol stream; however, the received trailing Control Indicators may be modified and certain frames may be aborted. The transmitter normally returns to the Idle state between frames (FR_Received or TK_Received). If a usable token is detected, then the transmitter returns to the Idle State before the FC field of the token is repeated and thus the token is stripped from the ring. The repeat action shall also be stopped for any frame where the Source Address field equals the MAC address (M_Flag), thereby stripping it from the ring, and whenever a format error (FO_Error) is detected by the receiver.

While in this state, the Transmitter may alter the values of individual control indicators in the repeated Frame Status field (FS_Actions). The processing on required indicators shall be:

a) If the E_Flag is set then the transmitted E Indicator (Ex) shall be an S symbol. Otherwise, Ex shall be an R symbol. (Note that E_Flag is always set when the received E Indicator (Er) is not R.)

b) If the A_Flag is set or the received A Indicator (Ar) is an S symbol, then the transmitted A Indicator (Ax) shall be an S symbol. Otherwise, if Ar is an R symbol, then Ax shall be an R symbol. If none of these conditions hold, then the transmitter shall transmit either a T or an I symbol and return to the IDLE state.

c) If the C_Flag is set and the N_Flag is not set or the received C Indicator (Cr) is an S symbol and the A_Flag is not set or Ar is an S symbol, then the transmitted C Indicator (Cx) shall be an S symbol. Otherwise, if Cr is an R symbol or the A_Flag is set and Ar is an R symbol, then Cx shall be an R symbol. If none of these conditions hold, then the transmitter shall transmit either a T or an I symbol and return to the IDLE state.

The processing of subsequent optional indicators by an addressed MAC (i.e. when the A_Flag is set) is unspecified, except that they shall be transmitted as R, S or T symbols; however, a MAC that is not explicitly addressed shall repeat them unaltered.

The Frame Status field is variable in length; consequently, some control indicators may inadvertently be destroyed by transmission noise on the ring. If an E, A or C indicator is not correctly received, it shall be processed according to rule (a), (b) or (c) above. If a subsequent optional indicator is not correctly received, then the transmitter shall transmit either a T or an I symbol and return to the IDLE state.

Copyright International Organization for Standardization
Reproduced by IHS under license with ISO
No reproduction or networking permitted without license from IHS Not for Resale

NOTE - When the above rules require transmission of either a T or an I symbol, an implementation may choose either one. This choice affects ring integrity in two ways. Transmission of an I symbol will allow the Elasticity Buffer and Smoothing functions defined in ISO 9314-1 and ISO/IEC 9314-7 to adjust at the earliest moment (i.e. one symbol earlier). ISO/IEC 9314-1 and ISO/IEC 9314-7 also define symbol coding rules which provide for the integrity of the End of Frame Sequence. Two NRZI code errors on the same transmission line are required to transform one R, S or T symbol into a different R, S or T symbol. A single error can transform an I symbol into an R or S symbol, whereas three errors must occur on the same transmission line to transform a T symbol into an I, R or S symbol. It is recommended that the trailing T symbol be used in case of errors to ensure maximum integrity of the Frame Status field.

When the foregoing rules cause a Frame Status symbol (R, S or T) to be transmitted, that symbol shall be transmitted in State T1 (REPEAT). When these rules cause an Idle symbol to be transmitted, first Transition T(10e) (Frame Repeated) shall occur, then the Idle symbol shall be transmitted in State T0 (IDLE).

T(10a): Capture Token: A transition to State T0 occurs before the Frame Control (FC) field of a token is repeated, if the token is usable or if repeating when partial recovery is enabled. A token is usable when the ring is operational (Ring_Operational) and either:

a) The station has a synchronous request queued for transmission and synchronous service is allowed, or

b) The token is early (Late_ct=0) and all of the following conditions exist:

   1) The station has an asynchronous request queued.

   2) The correct type of token was received (FCr.L = Requested_Token_Class) .

   3) Asynchronous priorities are not implemented or TRT is less than the T_pri threshold for the requested priority.

   4) The request is not a restricted request, or if the request is restricted, restricted service is enabled and B_Flag is set.

At this point, an attempt is made to capture the token by stripping it from the ring. Note that this transition may occur before the first symbol of the FC field is repeated, and shall occur before the last symbol of the FC field is repeated. The Receiver shall subsequently signal successful token capture (TK_Received) if a valid token was received.

This transition shall occur regardless of whether the Token is usable when partial recovery is enabled. In this case the Token shall always be stripped.

T(10b): Token Repeated: A transition to State T0 occurs after a token is repeated. If the ring is already operational (Ring_Operational), and if the token is early (Late_ct=0), then the Token-Rotation Timer (TRT) shall be reset to the Target Token Rotation Time (T_Opr); otherwise, Late_ct shall be cleared, allowing TRT to retain accumulated lateness. If the ring is not already operational, then T_Opr shall be set to the negotiated Target Token Rotation Time (T_Neg), TRT shall be reset to the new value of T_Opr, Late_ct shall be set to 1, and Ring_Operational shall be set. Finally, the transition to State T0 occurs.

A single TK_Received signal shall cause at most one transition in the Transmitter; i.e., this transition cannot immediately precede T(02) or T(03).

This transition shall not occur when partial recovery is enabled. In this case the Token shall always be stripped.

--`,,`,,`-`-`,,`,,`,`,,`---

Copyright International Organization for Standardization
Reproduced by IHS under license with ISO
No reproduction or networking permitted without license from IHS Not for Resale

T(10c): Reset: A transition to State T0 occurs when transmitter reset is required. Reset shall be required when any of the following conditions occurs:

a) An SM_MA_CONTROL.request(reset_mac or send_mac_frames) is received from SMT.

b) A MAC Frame is received when full recovery is enabled, and either Ring_Operational is set, or the Late_ct is zero, or the Token_Class is not equal to none and the MAC frame received was neither My_Claim nor My_Purge.

On this transition, the operational Target Token Rotation Time (T_Opr) shall be set to T_Max, TRT shall be reset to T_Opr and Token_Class shall be reset to none. If reset_mac was requested, then Late_ct shall be cleared to zero and Ring_Operational and D_Flag shall be cleared. Otherwise, if Ring_Operational is set or Late_ct is clear, then Late_ct shall be set to 1 and Ring_Operational shall be cleared. In any case, B_Flag shall be cleared (if restricted mode is implemented) and alternative stripping (bridge stripping) shall cease.

This transition shall take precedence over the recovery transition if their respective conditions occur simultaneously.

T(10d): Strip: A transition to State T0 occurs if the Fr_Strip or FO_Error signals are received, and the remainder of the PDU is stripped from the ring.

T(10e): Frame Repeated: A transition to State T0 occurs after a frame is repeated. This transition shall occur after processing the Frame Status field. Frame status processing shall terminate when neither an R nor an S symbol can properly be transmitted; however, when frame status processing terminates due to receipt of an invalid control indicator, or after the first symbol of a symbol pair, an implementation may complete processing of that symbol pair according to the specified rules for frame status processing. In these cases it is recommended that a trailing T symbol be transmitted before returning to State T0.

T(14): Recovery: A transition to State T4 occurs when ring recovery is required. Recovery shall be required when any of the following conditions occurs:

a) The Valid-Transmission Timer (TVX) expires when full recovery is enabled and HM_mode is not slave (or Hybrid mode is not implemented).

b) TRT expires and the token is already late (Late_ct>0) and either, HM_mode is not slave (or Hybrid mode is not implemented), or the ring is not operational (~Ring_Operational) and the Token_Class is none.

c) If Hybrid mode is implemented, and HM_mode is master, and the ring is not operational (~Ring_Operational), and the Token_Class is none.

d) A Claim Frame with a lower precedence is received (Lower_Claim) when full recovery is enabled.

The recovery transition conditions are asynchronous to the normal operation of the Transmitter. Therefore these conditions may occur at the same time as the conditions for some other transition. If this happens the other transition shall take precedence. However, the recovery transition conditions (e.g., timer expiration) shall be ‘remembered’ unless the pre-empting transition causes them to be cleared (e.g., timer reset).

-`-`-`-`-,,`,,`,`,,`---
Copyright International Organization for Standardization
Reproduced by IHS under license with ISO
No reproduction or networking permitted without license from IHS Not for Resale

8.4.3 State T2: TX_DATA (Transmit data)

In this state the transmitter transmits one or more data frames, the total being limited by the TRT and the amount of data queued for transmission; for synchronous data by this station's synchronous bandwidth allocation, and for asynchronous data by the values of the Token-Holding Timer and the asynchronous priority thresholds, if any. Before transmitting each frame, if the requested service class for the frame is asynchronous, then Token-Holding Timer (THT) shall be enabled; otherwise, THT shall be disabled. After transmitting the last frame of a request, Token_Class shall be updated based upon the (optional) issued_token_class parameter of the request.

T(20a): Reset: A transition to State T0 occurs when transmitter reset is required. Reset shall be required when any of the following conditions occurs:

a) An SM_MA_CONTROL.request(reset_mac or send_mac_frames) is received from SMT.

b) A MAC Frame is received when full recovery is enabled, and either Ring_Operational is set, or the Late_ct is zero, or the Token_Class is not equal to none and the MAC frame received was neither My_Claim nor My_Purge.

On this transition, the operational Target Token Rotation Time (T_Opr) shall be set to T_Max, TRT shall be reset to T_Opr and Token_Class shall be reset to none. If reset_mac was requested, then Late_ct shall be cleared to zero and Ring_Operational and D_Flag shall be cleared. Otherwise, if Ring_Operational is set or Late_ct is clear, then Late_ct shall be set to 1 and Ring_Operational shall be cleared. In any case, B_Flag shall be cleared (if restricted mode is implemented), alternative stripping (bridge stripping) shall cease, and D_Flag shall be cleared.

This transition shall take precedence over the recovery transition if their respective conditions occur simultaneously.

T(20b): No Token: A transition to State T0 occurs after an immediate transmission request is completed where the Token_Class is equal to none. The TRT is reset to T_Opr, the Late_ct is set to 1 and D_Flag is cleared.

T(22): Another Frame: A transition to State T2 occurs after the Frame Status (FS) is transmitted if another Frame can be transmitted. Upon completion of the current frame another frame can be transmitted if TRT has not expired (Late_ct =0) and either:

a) The ring is not operational and an immediate request is queued (optional), or

b) Synchronous is allowed, and a synchronous request is queued whose next frame transmission would not exceed the station’s synchronous bandwidth allocation (not checked by the MAC), or

c) An asynchronous request is queued and the following conditions exist:

   1) The Requested_Token_Class is equal to the current Token_Class.

   2) THT is unexpired or the token was early (T_Flag) and THT is to be ignored (Ignore_THT).

   3) The request is a non-priority request or the Token-Holding Timer (THT) is less than the requested priority threshold value (T_Pri(Request_Priority)).

   4) The request is a non-restricted request or if a restricted request then restricted service is enabled, and either B_Flag is set or the Requested_Token_Class is equal to restricted.

Copyright International Organization for Standardization
Reproduced by IHS under license with ISO
No reproduction or networking permitted without license from IHS Not for Resale

T(23): Done: A transition to State T3 occurs at the end of a completed Frame if there are no more Frames that may be transmitted as described in transition T(22), and the current Token_Class is not none. This transition shall also occur if TRT expires while the Transmitter is waiting to transmit another frame (e.g. during frame setup time or while waiting for the Stream indicator (see 6.1.1)).

On this transition, if Ring_Operational is not set then the Token-Rotation Timer (TRT) shall be reset and D_Flag shall be cleared.

T(24): Recovery: A transition to State T4 occurs when ring recovery is required. Recovery shall be required when any of the following conditions occurs:

a) The Valid-Transmission Timer (TVX) expires when full recovery is enabled and HM_mode is not slave (or Hybrid mode is not implemented).

b) TRT expires and the token is already late (Late_ct>0) and either, HM_mode is not slave (or Hybrid mode is not implemented), or the ring is not operational (~Ring_Operational) and the Token_Class is none.

c) If Hybrid mode is implemented, and HM_mode is master, and the ring is not operational (~Ring_Operational), and the Token_Class is none.

d) A Claim Frame with a lower precedence is received (Lower_Claim) when full recovery is enabled.

On this transition D_Flag shall be cleared.

The recovery transition conditions are asynchronous to the normal operation of the Transmitter. Therefore, these conditions may occur at the same time as the conditions for some other transition. If this happens, the other transition shall take precedence. However, the recovery transition conditions (e.g., timer expiration) shall be "remembered" unless the pre-empting transition causes them to be cleared (e.g., timer reset).

8.4.4 State T3: ISSUE_TK (Issue Token)

In this state, a new token is issued. This state is entered after the MAC has completed its data transmission or has been successful in claiming the token. The class of token issued after a successful Claim Token bidding process shall be non-restricted. Otherwise, the class of token to be issued is determined by the value of the Token_Class variable.

T(30a): Reset: A transition to State T0 occurs when transmitter reset is required. Reset shall be required when any of the following conditions occurs:

a) An SM_MA_CONTROL.request(reset_mac or send_mac_frames) is received from SMT.

b) A MAC Frame is received when full recovery is enabled, and either Ring_Operational is set, or the Late_ct is zero, or the Token_Class is not equal to none and the MAC frame received was neither My_Claim nor My_Purge.

On this transition, the operational Target Token Rotation Time (T_Opr) shall be set to T_Max, TRT shall be reset to T_Opr and Token_Class shall be reset to none. If reset_mac was requested, then Late_ct shall be cleared to zero and Ring_Operational and D_Flag shall be cleared. Otherwise, if Ring_Operational is set or Late_ct is clear, then Late_ct shall be set to 1 and Ring_Operational shall be cleared. In any case, B_Flag shall be cleared (if restricted mode is implemented) and alternative stripping (bridge stripping) shall cease.

This transition shall take precedence over the recovery transition if their respective conditions occur simultaneously.

Copyright International Organization for Standardization
Reproduced by IHS under license with ISO
No reproduction or networking permitted without license from IHS Not for Resale

T(30b): Token Issued: A transition to State T0 occurs after the transmitter has issued the ending delimiter of the token. On this transition, if Ring_Operational is not set then T_Opr shall be set to T_Neg, TRT shall be reset to T_Opr, and Late_ct shall be set to one. If Ring_Operational is set, then B_Flag shall be set if the Token_Class that was issued was non-restricted and the R_Flag is not set; otherwise, B_Flag shall be cleared.

T(34): Recovery: A transition to State T4 occurs when ring recovery is required. Recovery shall be required when any of the following conditions occurs:

a) The Valid-Transmission Timer (TVX) expires when full recovery is enabled and HM_mode is not slave (or Hybrid mode is not implemented).

b) TRT expires and the token is already late (Late_ct>0) and either, HM_mode is not slave (or Hybrid mode is not implemented), or the ring is not operational (~Ring_Operational) and the Token_Class is none.

c) If Hybrid mode is implemented, and HM_mode is master, and the ring is not operational (~Ring_Operational), and the Token_Class is none.

d) A Claim Frame with a lower precedence is received (Lower_Claim) when full recovery is enabled.

The recovery transition conditions are asynchronous to the normal operation of the Transmitter. Therefore, these conditions may occur at the same time as the conditions for some other transition. If this happens, the other transition shall take precedence. However, the recovery transition conditions (e.g. timer expiration) shall be "remembered" unless the pre-empting transition causes them to be cleared (e.g. timer reset).

8.4.5 State T4: CLAIM_TK (Claim Token)

On entry to the Claim Token state, the T_Opr shall be set to its maximum value (T_Max), TRT shall be reset to the new value of T_Opr, and Token_class shall be set to none. If Ring_Operational is set or Late_ct is equal to zero, then Late_ct shall be set to 1 and Ring_Operational shall be cleared. B_Flag shall be cleared if the optional restricted mode is implemented, and the bridge stripping shall be stopped if implemented. If Hybrid mode is implemented, then P_Flag shall be cleared and if the entry was caused by SM_MA_CONTROL.request(Claim), then HP_MODE.request(HP_mode(basic)) shall be asserted.

The transmitter then continuously sends either Claim or Purge frames to initialize the ring. A Purge Frame is sent if HM_mode(master) is asserted. In this case, HP_MODE.request(HP_mode(any)) shall be asserted, and P_Flag is set. Otherwise, HP_MODE.request(HP_mode(basic)) shall be asserted and Claim frames are transmitted.

When Claim Frames are sent, each MAC on the ring is forced to participate in negotiating the Target Token Rotation Time (TTRT). The Claim Frames include the bid for TTRT in the INFO field (T_Bid_tx) equal to this MAC's requested Target Token Rotation Time (T_Req) (if T_Req is not specified, then T_Bid_tx shall be set to T_Max). Claim continues until successful, a Beacon Frame or Higher_Claim Frame is received, TRT expires, or a MAC_Reset signal is received from SMT.

When Purge Frames are sent, each MAC on the ring is forced to accept the Target Token Rotation Time (TTRT) supplied by the master. The Purge Frames include the TTRT in the INFO field (T_Bid_tx) equal to this MAC's requested Target Token Rotation Time (T_Req) (if T_Req is not specified, then T_Bid_tx shall be set to T_Max). Purge continues until the master receives a valid My_Purge frame, a Beacon Frame is received, TRT expires, or a MAC_Reset signal is received from SMT. Should TRT expire before a valid My_Purge is received, the beacon process is entered in basic mode.

--`,,`,,`-`-`,,`,,`,`,,`---

Copyright International Organization for Standardization
Reproduced by IHS under license with ISO
No reproduction or networking permitted without license from IHS Not for Resale

While in this state, MAC shall not generate preambles longer than 16 symbols between transmitted frames, and shall be capable of continuously transmitting Claim or Purge frames with Information field lengths between 4 and 64 octets (inclusive), and optionally longer than 64 octets.

WARNING - To assure stable MAC protocol behavior, the maximum length of the MAC frames (including preamble) continuously transmitted in this state should be significantly less than T_Max / (N x M_Max). For more information see annex D.

Claim arbitration is successful when one MAC receives My_Claim Frame or My_Purge Frame (a frame successfully circulates the ring). The MAC that receives one of these frames shall issue a non-restricted token to restart ring operation.

If TRT expires while the MAC is issuing Claim or Purge Frames, MAC ring recovery has failed. The MAC shall exit this state to T5, to issue Beacon Frames indicating a serious ring failure. The comparison for establishing a Higher_Claim or Lower_Claim shall be made in the following order; first on the T_Bid_Rc field, second on the address length bit contained in the FC field, and finally on the address field itself. If a Lower_Claim Claim Frame is received, the MAC shall continue to send its own Claim Frames. If a Higher_Claim Claim Frame is received, a transition shall be made to State T1 and subsequent received Claim Frames shall be repeated.

T(40): Reset: A transition to State T0 occurs when transmitter reset is required. Reset shall be required when any of the following conditions occurs:

a) An SM_MA_CONTROL.request(reset_mac or send_mac_frames) is received from SMT.

b) A MAC Frame of Other_Beacon or Higher_Claim is received when full recovery is enabled.

c) If Hybrid Mode is implemented, P_Flag is set and HM_mode(master) is not asserted.

On this transition, the operational Target Token Rotation Time (T_Opr) shall be set to T_Max, TRT shall be reset to T_Opr and Token_Class shall be reset to none. If reset_mac was requested, then Late_ct shall be cleared to zero and Ring_Operational and D_Flag shall be cleared. Otherwise, if Ring_Operational is set or Late_ct is clear, then Late_ct shall be set to 1 and Ring_Operational shall be cleared. In any case, B_Flag shall be cleared (if restricted mode is implemented), alternative stripping (bridge stripping) shall cease, and D_Flag shall be cleared.

This transition shall take precedence over the recovery transition if their respective conditions occur simultaneously.

T(43): Successful Claim: A transition to State T3 occurs when full recovery is enabled, if the MAC receives its own (My_Claim) Claim Frame, or if the MAC receives My_Purge and HM_mode is master. TRT shall be reset to the Target Token Rotation Time of the ring (T_Opr). Every MAC on the ring shall have set T_neg from the INFO field of the Claim or Purge Frame. The D_Flag shall be cleared and the Token_Class shall be set to non-restricted. Finally, the transition to State T3 occurs.

T(45): Failed: A transition to State T5 is made if TRT expires while the MAC is issuing Claim Frames. The Beacon type shall be set to Unsuccessful Claim and the Beacon DA shall be set to Null to indicate the failure of the Claim Token process. The D_Flag shall be cleared. Finally, the transition to State T5 occurs.

Copyright International Organization for Standardization
Reproduced by IHS under license with ISO
No reproduction or networking permitted without license from IHS Not for Resale

8.4.6 State T5: TX_BEACON (Transmit Beacon)

This state is entered if the MAC's attempt at ring recovery by issuing Claim Frames fails, or upon request from SMT. This action normally occurs if there is a physical interruption in the ring or SMT has detected a condition requiring notification to all stations. In this state, a MAC continuously transmits Beacon Frames. The normal effect on any MAC of receiving a Beacon Frame is to revert to idle and repeat mode, so that only the MAC transmitter immediately downstream from the logical ring interruption persists in issuing Beacon Frames.

In this state MAC shall not generate preambles longer than 16 symbols between transmitted frames to ensure reliable stabilization of the beacon process within the allotted time (T_Max).

While in this state, MAC shall be capable of continuously transmitting Beacon frames with Information field lengths between 4 and 64 octets (inclusive), and optionally longer than 64 octets.

> **WARNING - To assure stable MAC protocol behavior, the maximum length of the MAC frames (including preamble) continuously transmitted in this state should be significantly less than T_Max / (N x M_Max). For more information see annex D.**

T(50): Reset: A transition to State T0 occurs when transmitter reset is required. Reset shall be required when either of the following conditions occurs:

a) An SM_MA_CONTROL.request(reset_mac or send_mac_frames) is received from SMT.

b) A Beacon Frame with a another MAC's Source Address is received (Other_Beacon) when full recovery is enabled.

On this transition, the operational Target Token Rotation Time (T_Opr) shall be set to T_Max, TRT shall be reset to T_Opr and Token_Class shall be reset to none. If reset_mac was requested, then Late_ct shall be cleared to zero and Ring_Operational and D_Flag shall be cleared. Otherwise, if Ring_Operational is set or Late_ct is clear, then Late_ct shall be set to 1 and Ring_Operational shall be cleared. In any case, B_Flag shall be cleared (if restricted mode is implemented), alternative stripping (bridge stripping) shall cease, and D_Flag shall be cleared.

This transition shall take precedence over the recovery transition if their respective conditions occur simultaneously.

T(54): Fixed: A transition to State T4 occurs when full recovery is enabled, if the MAC receives its own Beacon Frames. The D_Flag shall be cleared. The MAC shall attempt to recover the ring.

--`,,`,,`-`-`,,`,,`,`,,`---

Copyright International Organization for Standardization
Reproduced by IHS under license with ISO
No reproduction or networking permitted without license from IHS Not for Resale

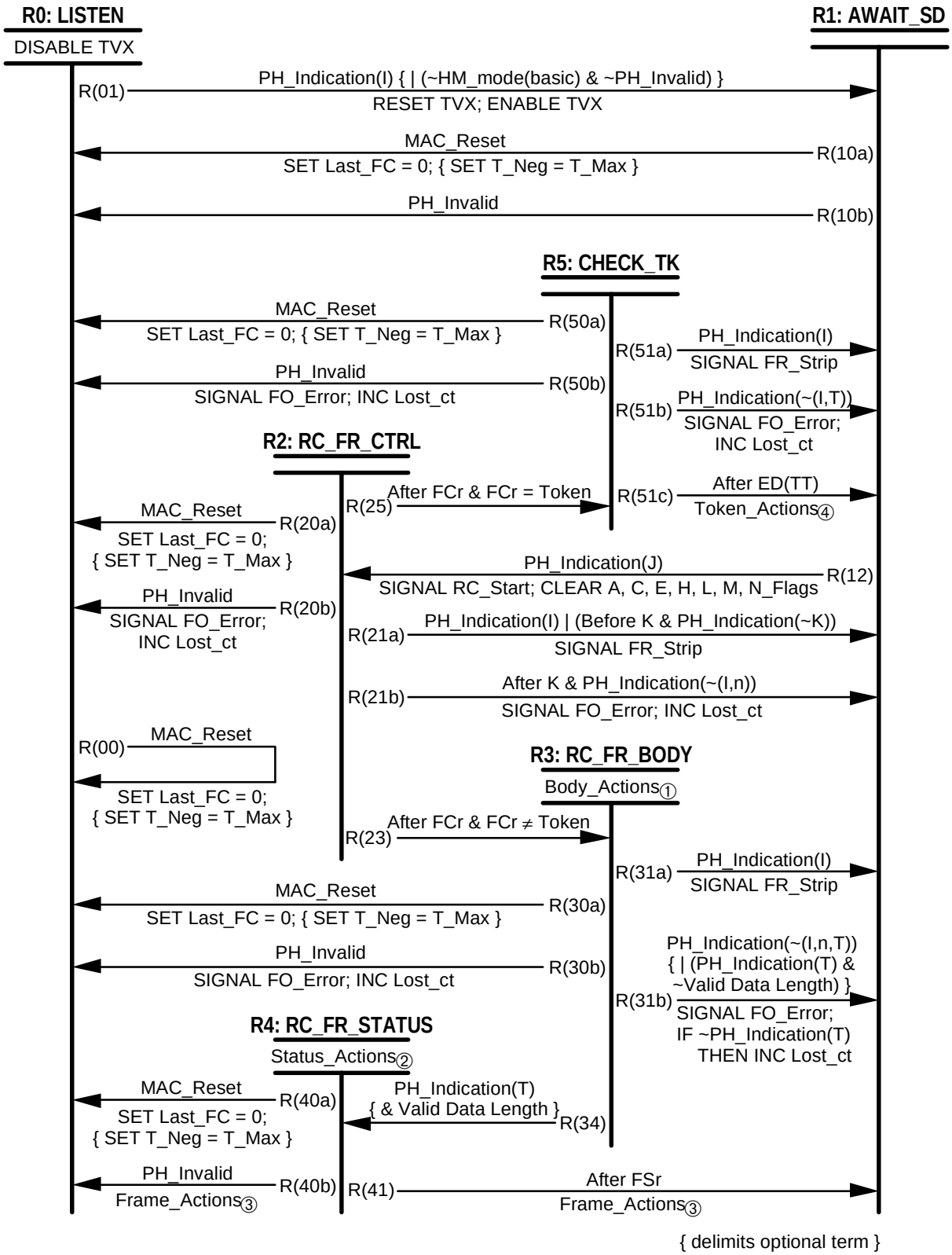

Figure 3 – MAC Receiver state diagram (Part 1 of 4)

Copyright International Organization for Standardization
Reproduced by IHS under license with ISO
No reproduction or networking permitted without license from IHS
Not for Resale

1. Body_Actions:

```
After DAr DO
IF ((FCr.L = 0 & DAr ∈ Short_Addresses) |
    (FCr.L = 1 & DAr ∈ Long_Addresses))
     THEN SET A_Flag;
          IF FCr ≠ Void
               THEN Copy frame;
               IF FCr = Next Station Addressing
                    THEN SET N_Flag
     { ELSE IF FCr.L = 1 & FCr.FF ≠ 0 &      « transparent bridges »
                DAr ∈ Transparent_Bridge_Addresses
               THEN Copy frame; SET N_Flag }

After SAr DO
IF (FCr.L = 0 & MSA enabled & SAr = MSA) |
   (FCr.L = 1 & MLA enabled & SAr = MLA)
     THEN SIGNAL FR_Strip;
          IF SAr > 0
               THEN SET M_Flag
     ELSE IF SAr > 0
               THEN IF (FCr.L = 0 & (MSA disabled | SAr > MSA) &
                                    (MLA disabled | MLA = 0)) |
                       (FCr.L = 1 & (MLA disabled | SAr > MLA))
                       THEN SET H_Flag
                       ELSE SET L_Flag

After 4 INFO octets DO
IF FCr = (Claim | Purge) & T_Bid_rc ≠ T_Req
     THEN IF M_Flag
               THEN CLEAR A_Flag
          IF T_Bid_rc > T_Req
               THEN IF L_Flag
                       THEN SET H_Flag; CLEAR L_Flag
               ELSE IF H_Flag & ((MSA enabled & MSA > 0) |
                                 (MLA enabled & MLA > 0))
                       THEN SET L_Flag; CLEAR H_Flag
IF FCr = Claim & ~H_Flag
     THEN SIGNAL FR_Strip

{ After routing field DO   « explicit bridges »
IF FCr.L = 1 & FCr.FF ≠ 0 & SAr.RII = 1 &
   Address match in routing field
     THEN SET A_Flag; Copy frame }
```

Footnote: { delimits optional term } « delimits comment »

Figure 3 – MAC Receiver state diagram (Part 2 of 4)

Copyright International Organization for Standardization
Reproduced by IHS under license with ISO
No reproduction or networking permitted without license from IHS Not for Resale

2. Status_Actions:

```
On entry DO
INC Frame_ct; SET E_Flag

After Er DO
IF Er ≠ R | ~Valid Data Length | ~(Valid FCSr | FCr.FF = Implementor)
    THEN            « invalid frame »
        CLEAR A, H, L, M, N_Flags;
        IF FCr = Void & Er = R { & HM_Mode(Basic) }
            THEN RESET TVX; CLEAR E_Flag
    ELSE            « valid frame »
        RESET TVX; CLEAR E_Flag; SET Last_FC = FCr;
        IF (A_Flag | N_Flag) & Frame copied
            THEN SET C_Flag;
                { IF FCr ≠ (Void | MAC)
                    THEN INC Copied_ct }
        CASE FCr OF
            Beacon:
                { SET T_Neg = T_Max; }
                IF M_Flag
                    THEN SIGNAL My_Beacon
                    ELSE SIGNAL Other_Beacon
                Disallow synchronous and restricted requests
            Claim:
                IF H_Flag | (A_Flag & M_Flag)
                    THEN T_Neg_Actions;
                        IF H_Flag
                            THEN SIGNAL Higher_Claim
                            ELSE SIGNAL My_Claim
                    ELSE IF ~M_Flag & ((MSA enabled & MSA > 0)
                                       (MLA enabled & MLA > 0))
                            THEN SIGNAL Lower_Claim
            { Purge:        « FDDI-II »
                IF H_Flag | L_Flag | (A_Flag & M_Flag)
                    THEN T_Neg_Actions;
                        IF A_Flag & M_Flag
                            THEN SIGNAL My_Purge
                            ELSE SIGNAL Other_Purge }
            { Void:         « bridge stripping »
                IF ~M_Flag
                    THEN SIGNAL Other_Void
                    ELSE IF A_Flag
                            THEN SIGNAL My_Void }
After Ar DO
IF Ar = R
    THEN CLEAR N_Flag
    ELSE IF Ar = S & A_Flag & DAr.IG = 0 & ~E_Flag &
            (FCr.FF = 0 | SAr.RII = 0)
            THEN Notify SMT (suspect DA received)
```

Footnote: { delimits optional term } « delimits comment »

Figure 3 – MAC Receiver state diagram (Part 3 of 4)

Copyright International Organization for Standardization
Reproduced by IHS under license with ISO
No reproduction or networking permitted without license from IHS Not for Resale

3. Frame_Actions:

```
IF FCr.C = 1 & FCr.FF = 0 & ~E_Flag
  THEN SIGNAL MAC_Frame; CLEAR R_Flag;
       Disallow restricted requests
SIGNAL FR_Received;
IF E_Flag & Er ≠ S
  THEN INC Error_ct
{ IF ~E_Flag & A_Flag & ~M_Flag & ~N_Flag & ~C_Flag & FCr ≠ (Void | MAC)
  THEN INC Not_Copied_ct }
```

4. Token_Actions:

```
IF FCr.L = 1
THEN IF ~R_Flag
          THEN SET R_Flag; Notify SMT (restricted token mode)
ELSE RESET TVX; CLEAR R_Flag
{ INC Token_ct; } SET Last_FC = FCr; SIGNAL TK_Received
```

5. T_Neg_Actions:

```
SET T_Neg = T_Bid_rc;
{ IF T_Bid_rc < T_Max
THEN Notify SMT (invalid T_Bid_rc)
ELSE IF T_Bid_rc > T_Min
          THEN Notify SMT (invalid T_Bid_rc) }
```

Footnote: { delimits optional term } « delimits comment »

Figure 3 – MAC Receiver state diagram (Part 4 of 4)

Copyright International Organization for Standardization
Reproduced by IHS under license with ISO
No reproduction or networking permitted without license from IHS Not for Resale

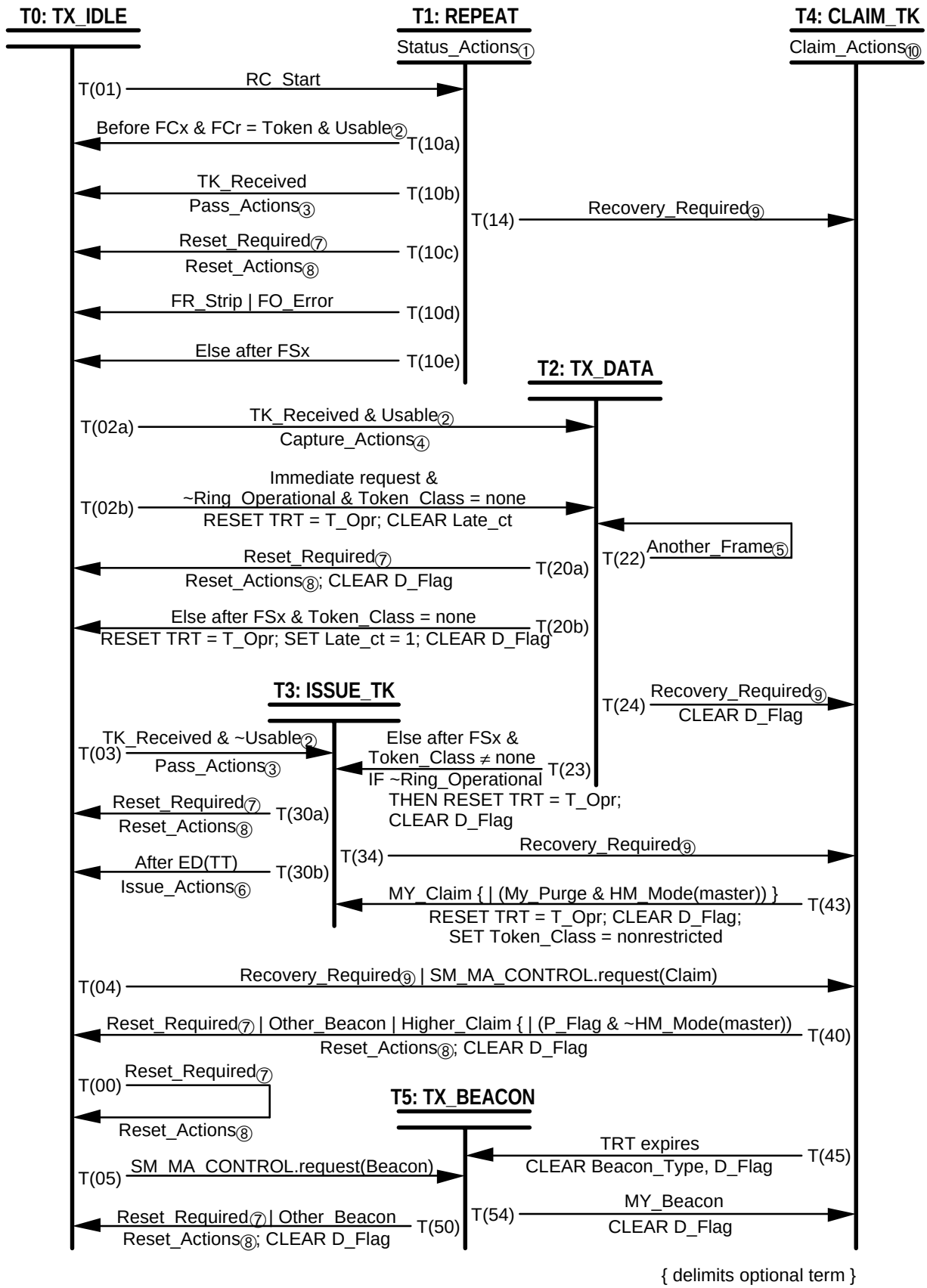

Figure 4 – MAC Transmitter state diagram (Part 1 of 4)

Copyright International Organization for Standardization
Reproduced by IHS under license with ISO
No reproduction or networking permitted without license from IHS
Not for Resale

1. Status_Actions:

```
Before Ex DO
IF E_Flag
      THEN SET Ex = S
      ELSE SET Ex = R

Before Ax DO
IF A_Flag | Ar = S
            THEN SET Ax = S
            ELSE IF Ar = R
                        THEN SET Ax = R
                        { ELSE SET Ax = T }

Before Cx DO
IF (C_Flag & ~N_Flag) | (Cr = S { & ~(A_Flag & Ar ≠ S) } )
      THEN SET Cx = S
      ELSE IF Cr = R { | (A_Flag & Ar = R) }
                  THEN SET Cx = R
                  { ELSE SET Cx = T }
```

2. Usable_Token:

```
Ring_Operational &
( { (Synchronous request & Synchronous allowed) | }
  (Asynchronous request & Requested token class = FCr.L &
   Late_ct = 0
   { & (Non-priority request | TRT < T_Pri[Request priority]) }
   { & (Non-restricted request |
        (Restricted allowed &
         (B_Flag | Requested token class = restricted))) } ))
```

3. Pass_Actions:

```
IF Ring_Operational
THEN IF Late_ct = 0
            THEN RESET TRT = T_Opr
            ELSE CLEAR Late_ct
ELSE SET T_Opr = T_Neg; RESET TRT = T_Opr; SET Late_ct = 1;
      SET Ring_Operational
IF FCr.L = 1
THEN { CLEAR B_Flag; }
      SET Token_Class = restricted
ELSE { SET B_Flag; }
      SET Token_Class = nonrestricted
{ Stop bridge stripping }
```

Footnote: { delimits optional term }

Figure 4 – MAC Transmitter state diagram (Part 2 of 4)

Copyright International Organization for Standardization
Reproduced by IHS under license with ISO
No reproduction or networking permitted without license from IHS Not for Resale

4. Capture_Actions:

```
DISABLE THT;
IF Late_ct = 0
THEN { SET T_Flag; } SET THT = TRT; RESET TRT = T_Opr
ELSE SET THT = expired; CLEAR { T_Flag, } Late_ct
IF FCr.L = 1
THEN SET Token_Class = restricted
ELSE SET Token_Class = non-restricted
{ Stop bridge stripping }
```

5. Another_Frame:

```
After FSx & Late_ct = 0 &
( { (~Ring_Operational & Immediate request) | }
  (Ring_Operational &
   ( { (Synchronous request & Synchronous allowed) | }
    (Asynchronous request & Requested token class = Token_Class &
     (THT unexpired { | (T_Flag & Ignore THT) } )
     { & (Non-priority request | THT < T_Pri[Request priority]) }
     { & (Non-restricted request |
          (Restricted allowed &
           (B_Flag | Requested token class = restricted))) } ))))
```

6. Issue_Actions:

```
IF ~Ring_Operational
THEN SET T_Opr = T_Neg; RESET TRT = T_Opr; SET Late_ct = 1
{ ELSE IF Token_Class = non-restricted & ~R_Flag
            THEN SET B_Flag
            ELSE CLEAR B_Flag }
```

7. Reset_Required:

```
MAC_Reset | SM_MA_CONTROL.request(send_mac_frame) |
(MAC_Frame &
 (Ring_Operational | Late_ct = 0 |
  (Token_Class ≠ none & ~My_Claim { & ~My_Purge } )))
```

8. Reset_Actions:

```
SET T_Opr = T_Max; RESET TRT = T_Opr; SET Token_Class = none;
IF MAC_Reset
THEN CLEAR Late_ct , Ring_Operational, D_Flag
ELSE IF Ring_Operational | Late_ct = 0
            THEN SET Late_ct = 1; CLEAR Ring_Operational
{ CLEAR B_Flag; Stop bridge stripping }
```

Footnote: { delimits optional term }

Figure 4 – MAC Transmitter state diagram (Part 3 of 4)

Copyright International Organization for Standardization
Reproduced by IHS under license with ISO
No reproduction or networking permitted without license from IHS Not for Resale

9. Recovery_Required:

```
(TVX expired { &  ~HM_mode(slave) } ) |
(TRT expires & Late_ct > 0
 { & (~HM_mode(slave) | (~Ring_Operational & Token_Class = none)) } ) |
{ (HM_mode(master) & ~Ring_Operational & Token_Class = none) | }
Lower_Claim
```

10. Claim_Actions:

```
On entry DO
SET T_Opr = T_Max; RESET TRT = T_Opr; SET Token_Class = none;
IF Ring_Operational | Late_ct = 0
      THEN SET Late_ct = 1; CLEAR Ring_Operational
{ CLEAR B_Flag; Stop bridge stripping }
{ CLEAR P_Flag;
  IF SM_MA_CONTROL.request(Claim)
      THEN HP_MODE.request(HP_Mode(basic)) }

REPEAT
{ IF HM_mode(master)
      THEN HP_MODE.request(HP_Mode(any)); SET P_Flag;
            Transmit Purge frame
      ELSE HP_MODE.request(HP_Mode(basic)); }
            Transmit Claim frame

Before T_Bid_tx DO
SET T_Bid_tx = T_Req
```

11. TRT_Actions:

```
Always DO
IF TRT > T_Opr + DM_Min & ~Ring_Operational & ~D_Flag
      THEN SET D_Flag
IF TRT expires
      THEN
            { IF Late_ct > 0 & HM_mode(slave) &
                  (Ring_Operational | Token_Class ≠ none))
                  THEN SET T_Opr = T_Max;
                        RESET TRT = T_Opr;
                        SET Token_Class = none; CLEAR Ring_Operational;
                        CLEAR B_Flag; Stop bridge stripping
                  ELSE }
                        RESET TRT = T_Opr;
                        IF Late_ct < 255
                              THEN INC Late_ct
```

Footnote: { delimits optional term }

Figure 4 – MAC Transmitter state diagram (Part 4 of 4)

Copyright International Organization for Standardization
Reproduced by IHS under license with ISO
No reproduction or networking permitted without license from IHS Not for Resale

Annex A
(informative)

Addressing

This annex provides information on a number of topics related to addressing, such as the structure of addresses, their administration, and representation of addresses for interchange.

A.1 General structure

FDDI allows short (16-bit) and long (48-bit) addresses. The basic structure of the addresses is shown below.

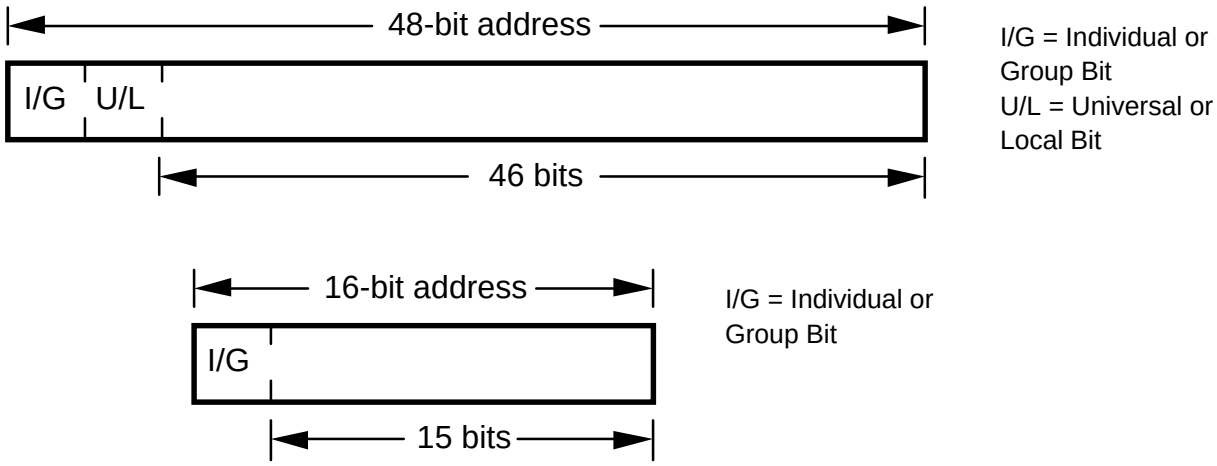

The "I/G" bit is the "individual/group" address bit. For destination addresses, the value 0 indicates an individual address; the value 1 a group address. Individual addresses refer to a single MAC entity. Group addresses refer to multiple destination MAC entities. Refer to A.4 for details about group addresses.

In the Source Address field of the MAC header, the I/G bit indicates the presence or absence of source routing information (refer to A.5 for details) if the address is a long address. If the address is a short address, the I/G bit is reserved in the SA field. The I/G bit is ignored when making the frame stripping decision (see 8.3.5).

A.2 Administration of addresses

The second bit ("U/L" bit) in long addresses is the administration bit: the value 0 indicates a universally administered address, the value 1 a locally administered address. In short addresses, there is no administration bit. Short addresses are always locally administered.

Copyright International Organization for Standardization
Reproduced by IHS under license with ISO
No reproduction or networking permitted without license from IHS Not for Resale

A.2.1 Locally administered addresses

Assignment of locally administered addresses is not defined within FDDI. They may be assigned by the network administrator of a particular local area network (LAN), or by some other method. It is the responsibility of the network administrator to prevent duplication of these addresses. Since administration is local, multiple LANs may have conflicting address assignments. If two LANs are merged, it is the responsibility of the network administrator to resolve any conflicts in address assignment.

Apart from the structure shown in A.1, no further structure is imposed on locally administered addresses. Local policies or the requirements of applications or other network components may impose additional structure, for example a hierarchical structure.

A.2.2 Universally administered addresses

Universally administered addresses are defined in a manner that assures that no two addresses assigned anywhere will be the same. Unlike locally administered addresses, this eliminates the need to resolve conflicts when LANs are merged. The mechanism used to do this is a hierarchical administration.

The first level registers organizations that will assign addresses. This responsibility has been delegated to the IEEE Standards Office. The second level is administered by the individual organizations, which are responsible for creating unique assignments within that organization's range of addresses.

> NOTE: For further information on this registration process, please contact:
> Registration Authority, IEEE Standards, 445 Hoes Lane, P.O. Box 1331
> Piscataway, NJ 08855-1331, USA - Phone 908 562-3813.

The addresses defined by this process have a structure as shown below:

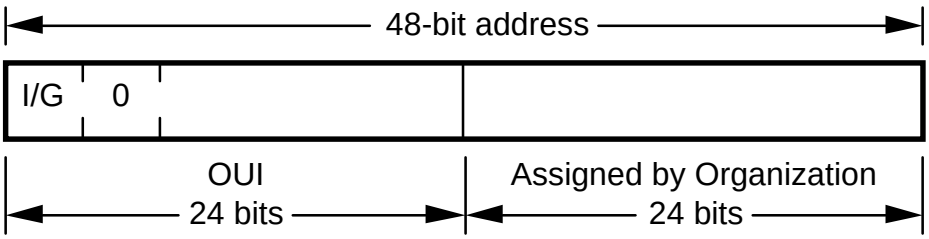

The first 24 bits of a universally administered address represent the Organizationally Unique Identifier (OUI). The first bit is the I/G bit and can be either zero or one, as needed for the particular address being defined. The second bit (U/L) is zero to indicate a universally administered address. The remaining 22 bits of the OUI uniquely identify an organization that can make universally administered address assignment. The OUI is assigned by the IEEE Standards Office, under the authority vested in them by ISO/IEC.

The remaining 24 bits are assigned by the organization identified by the OUI.

Note that OUI assignments are specified as 24 bits (not 22 bits). However, the I/G bit is effectively a "don't care" bit. The organization identified by the OUI may assign both individual addresses (where the I/G bit is 0) and group addresses (where the I/G bit is 1).

--`,,`,,`-`-`,,`,,`,`,,`---

Copyright International Organization for Standardization
Reproduced by IHS under license with ISO
No reproduction or networking permitted without license from IHS Not for Resale

A.3 Transmission order

The transmission order of Destination and Source Addresses in FDDI is consistent with ISO/IEC 8802 LANs. The first bit of the Destination Address transmitted is the I/G (individual/group) bit. (The FDDI PHY does not actually transmit individual bits, but transmits 4 bits at a time in 4B/5B coded symbols. The I/G bit of the Destination Address is the high-order bit of the first symbol transmitted.)

Two transmission order rules are used by these LANs for the contents of the Info field. For FDDI, these data octets are transmitted high order bit first. Token Ring (see ISO/IEC 8802-5) uses the same rule, but CSMA/CD (see ISO/IEC 8802-3) and Token Bus (see ISO/IEC 8802-4) LANs transmit these data octets low-order bit first.

A.3.1 Representation of addresses

If addresses are represented as bit strings, their interpretation for the various LAN types is generally straightforward. However, bit strings are not suitable for a canonical representation of addresses, for two reasons.

First, for presentation to humans, bit strings are long, cumbersome, and therefore error prone; hexadecimal strings are much more convenient. Second, in higher layer protocols (for example ISO 9542 (see E), ARP, or network management), addresses occur as part of the data being exchanged, and the data is treated as octet strings.

As noted above, there exist two transmission order rules: one for MAC address fields, and one for data. If addresses are represented as octet strings and then sent in the data portion of a frame, care must be taken to interpret addresses in a consistent fashion.

A.3.1.1 ISO/IEC canonical notation for 48-bit addresses

The ISO/IEC 8802 LANs Overview and Architecture has defined a canonical form (referred to as the illustrative representation in the document) for representing 48-bit addresses as octet strings. The canonical form is a 6-octet string. The first octet contains the first 8 bits of the address, with the I/G bit as the least significant bit, the U/L bit as the next more significant bit, and so on. When displayed for use by humans, the canonical form is shown as a hexadecimal string, written from left to right, with hyphens separating the individual octets.

The example below shows a canonical form address, and the sequence of bits or symbols that would be transmitted when the address is used in the Source Address or Destination Address fields of the MAC header:

Canonical:	AC-DE-48-00-00-80
Transmission:	00110101 01111011 00010010 00000000 00000000 00000001
FDDI symbols:	3 5 7 B 1 2 0 0 0 0 0 1

The ‘transmission’ line shows the address bits in the order transmitted, from left to right. For ISO/IEC 8802 LANs these correspond to actual bits on the medium. The ‘FDDI symbols’ line shows how the FDDI PHY sends the address bits as 4B/5B encoded symbols.

Misinterpretation of addresses is avoided by using the canonical form for interchange. In presentation to humans (for example in address registries), the hexadecimal string form is used, with hyphens. In higher layer protocols, the 6-octet string form is used.

Copyright International Organization for Standardization
Reproduced by IHS under license with ISO
No reproduction or networking permitted without license from IHS Not for Resale

The example below illustrates the case where an address is carried as higher layer data (for example, in an ISO 9542 or ARP message). The address is the same as the one shown in the example above. To illustrate the differences in data transmission order, the example below shows not just how the FDDI will transmit this value, but also how each of the ISO/IEC 8802 LANs transmit it. For the ISO/IEC 8802 LANs, the bits as transmitted on the medium are shown, written from left to right. For FDDI, the PHY symbols are shown, again written from left to right.

Canonical:	AC-DE-48-00-00-80
ISO/IEC 8802-3:	00110101 01111011 00010010 00000000 00000000 00000001
ISO/IEC 8802-4:	00110101 01111011 00010010 00000000 00000000 00000001
ISO/IEC 8802-5:	10101100 11011110 01001000 00000000 00000000 10000000
FDDI:	A C D E 4 8 0 0 0 0 8 0

In protocols which are confined to a single ring, such as the MAC and SMT protocols, it is possible to use a representation different from the canonical form. However, if something else is used this may create more confusion. Therefore, IEEE recommends that the canonical notation be used in all cases. (Note that the part of ISO/IEC 9314 on SMT does not always follow this convention.)

A.3.1.2 Canonical notation for 16-bit addresses

The ISO/IEC 8802 LANs Overview and Architecture only defines a canonical form for 48-bit addresses. However, both 48-bit and 16-bit addresses will be found in addresses shown to humans, and in addresses conveyed in higher layer protocols such as network management protocols. Therefore it is necessary to have a canonical notation for both types.

The canonical form for 16-bit addresses is defined by analogy to the IEEE definition. The canonical form is a 2-octet string. The first octet contains the first 8 bits of the address, with the I/G bit as the least significant bit. The second octet contains the remaining 8 bits of the address. When displayed for use by humans, the canonical form is shown as a hexadecimal string, written from left to right, with a hyphen separating the two octets.

A.4 Group addresses

Group addresses are distinguished from individual addresses by the I/G bit, which is 1 for a group address. Long group addresses may be either locally administered or universally administered, as described in clause A.2. Short group addresses are always locally administered.

Group addresses occur only in the Destination Address field of the MAC header. In the Source Address field, the I/G bit has a different meaning (see clause A.5 below).

A.4.1 Broadcast address

The Broadcast address is a special group address. It is the address consisting of all 1 bits, and by convention denotes all stations on the LAN. Note that the broadcast address is effectively a universal assignment, even though it has the format of a locally administered group address.

Copyright International Organization for Standardization
Reproduced by IHS under license with ISO
No reproduction or networking permitted without license from IHS Not for Resale

A.4.2 Assignment of group addresses for use in standards

Protocols defined by national or international standards often have a need to define one or more addresses. In general these are group addresses, used to address the group of stations that participate in some particular protocol. (For example, group addresses assigned to ISO/IEC 9314-6 include 01-80-C2-00-01-00, 01-80-C2-00-01-10, 01-80-C2-00-01-2C, and 01-80-C2-00-01-30, as represented in canonical form.)

Since locally administered addresses are not assigned by these standards, it is expected that they will use universally administered addresses. While it would be possible in principle to have a distinct OUI (Organizationally Unique Identifier) for a particular standard, this is not appropriate since only a few addresses are generally needed. Therefore, the IEEE Standards Office has created a separate procedure for this case.

Recognized standards bodies can request from the IEEE Standards Office the assignment of group addresses, or a range of group addresses. The IEEE Standards Office, together with project IEEE P802.1, will fulfil such requests using an OUI it has set aside for standard group addresses.

A.4.3 Group addresses assigned for use in FDDI

Protocols defined within the part of ISO/IEC 9314 on SMT, utilize group addresses. Reliable recognition of these addresses can be useful in SMT protocols, and is required in this part of ISO/IEC 9314. Addresses that have been assigned to the SMT protocol differ only in the last octet, with the difference being in the last symbol transmitted. It is planned (but cannot be guaranteed) that additional addresses, if required, will be assigned with the same leading symbols. Two addresses that have been assigned to date (in canonical representation) are:

RMT Directed Beacon	01 80 C2 00 01 00
Status Report Frame	01 80 C2 00 01 10

A.5 Source routing addressing

In a frame with long addresses, the first bit in the Source Address field of the MAC header is a Routing Information Indicator (RII) bit, used to indicate the presence of a Routing Information header (1 means present). If present, the Routing Information header immediately follows the Source Address field of the MAC header.

Source routing is not defined for frames that use short addresses. With short addresses, the first bit in the source Address field is reserved.

Details on the format of the Routing Information header, and the algorithms used to determine its contents, may be found in ISO/IEC 10038.

A.6 References

Further background material on the topics discussed in this annex may be found in IEEE 802-1990 Overview and Architecture.

--`,,`,,`-`-`,,`,,`,`,,`---

Copyright International Organization for Standardization
Reproduced by IHS under license with ISO
No reproduction or networking permitted without license from IHS Not for Resale

Annex B
(informative)

Frame Check Sequence

B.1 Description

The transmission integrity of a received message is determined by the use of a frame check sequence (FCS). The FCS is generated by a transmitter, positioned within a frame in accordance with the diagram in 7.2.2., and inspected by a receiver.

The definitions of the constants and variables used in this annex are given in 7.3.6.1.

The FCS generation algorithm used is the 32-bit standard algorithm. (See clause B.5 for further information.) The procedure for using the FCS assumes the following:

a) The k bits of data that are being checked by the FCS can be represented by a polynomial F(X) of degree k-1. Examples:

   1) $F(X) = 10100100 = X^7 + X^5 + X^2$

   2) $F(X) = 000...010100100 = X^7 + X^5 + X^2$

   3) $F(X) = 101001 = X^5 + X^3 + 1$

In general, leading zeros do not affect F(X) while trailing zeros add a factor of X^n where n is the number of trailing zeros.

b) For the purpose of generating the FCS, the first bit transmitted of the fields covered by the FCS is the coefficient of the highest term of F(X), regardless of the actual meaning of those fields.

c) There exists a generator polynomial G(X) (see 7.3.6).

d) There exists a polynomial L(X) equal to 32 one's (see 7.3.6).

B.2 Generation of the FCS

The FCS is defined as the ones complement of a remainder of R(X) obtained from the modulo two division of:

$$X^{32} F(X) + X^k L(X)$$

by the generator polynomial G(x).

$$FCS = L(X)+R(X) = R\$(X) \quad \text{(B1)}$$

where R$(X) is the one's complement of R(X)

$$[X^{32} F(X) + X^k L(X)] / G(X) = Q(X) + R(X) / P(X) \quad \text{(B2)}$$

The multiplication of F(X) by X^{32} corresponds to shifting the message F(X) left by 32 places to provide space for the FCS to be added.

The addition of the X^k L(X) term is equivalent to inverting the first 32 bits of F(X). This may be accomplished in a shift register implementation by presetting the shift register to all ones. This term is included to detect erroneous addition or deletion of zero bits at the leading edge of the message.

Copyright International Organization for Standardization
Reproduced by IHS under license with ISO
No reproduction or networking permitted without license from IHS Not for Resale

The complementing of R(X) by the transmitter before transmission ensures that the transmitted sequence has a property that permits the receiver to detect addition or deletion of trailing zeros that may appear as a result of errors.

At the transmitter, the FCS is added to the X^{32} F(X) term resulting in a total transmitted message.

$$M(X) = X^{32} F(X)+FCS \quad \text{(B3)}$$

B.3 Checking the FCS

In the receiver, a process nearly identical to the generation process is used to check the received sequence. The received sequence M*(X) is added to X^k L(X). Then the sum is multiplied by X^{32} and divided by G(X). This yields

$$D(X)=X^{32} [M^* (X)+X^k L(X)] / G(X) \quad \text{(B4)}$$

If there are no errors, M*(X) = M(X), and we may substitute (B3) into (B4):

$$D(X)=X^{32} [X^{32} F(X)+FCS+X^k L(X)] / G (X)] \quad \text{(B5)}$$

We may now substitute (B1) and (B2) into (B5), to yield

$$D(X)=X^{32}[Q(X) + R(X) / G(X) + R\$(X) / G(X)] \quad \text{(B6)}$$

Thus by adding them together we get all ones or L(X):

$$R(X) + R\$(X) = L(X) \quad \text{(B7)}$$

Substituting (B7) into (B6),

$$D(X)= X^{32}[Q(X) + L(X) / G(X)] = Q^*(X) + P(X) / G(X) \quad \text{(B8)}$$

Taking the remainder,

$$P(X) / G(X) = X^{32} L(X) / G(X) = C(X) \quad \text{(B9)}$$

in the absence of any errors. If there were an error, then M*(X) _ M(X) and a different remainder would be calculated.

B.4 Implementation

The mathematical derivation and proof of the FCS algorithm shown above is not suggestive of an appropriate implementation. For this reason one method of implementing the FCS generation and checking using shift registers is described here. It utilizes "ones presetting" at both the sender and receiver. The receiver checks for the residual C(X) to indicate an error-free reception.

A feedback shift register is used to accomplish the division by G(X). This 32-bit register is accessed via the three signals Input, Output, and Control. When Control=one, Input bits are shifted into the feedback register and also fed back to the Output. When Control = zero, the feedback paths are disabled and the shift register shifts the complement of its contents to Output. This is shown in figure B.1.

Before FCS generation at the transmitting end, initialization logic (not shown) presets the shift register to all ones. Control is then held at one while the sequence to be checked is shifted into the input. Meanwhile, the same bits are emerging at output to be transmitted. When the last bit of the data field has been processed, Control is set to zero and the complemented FCS is shifted out for transmission, high-order bit first.

Copyright International Organization for Standardization
Reproduced by IHS under license with ISO
No reproduction or networking permitted without license from IHS Not for Resale

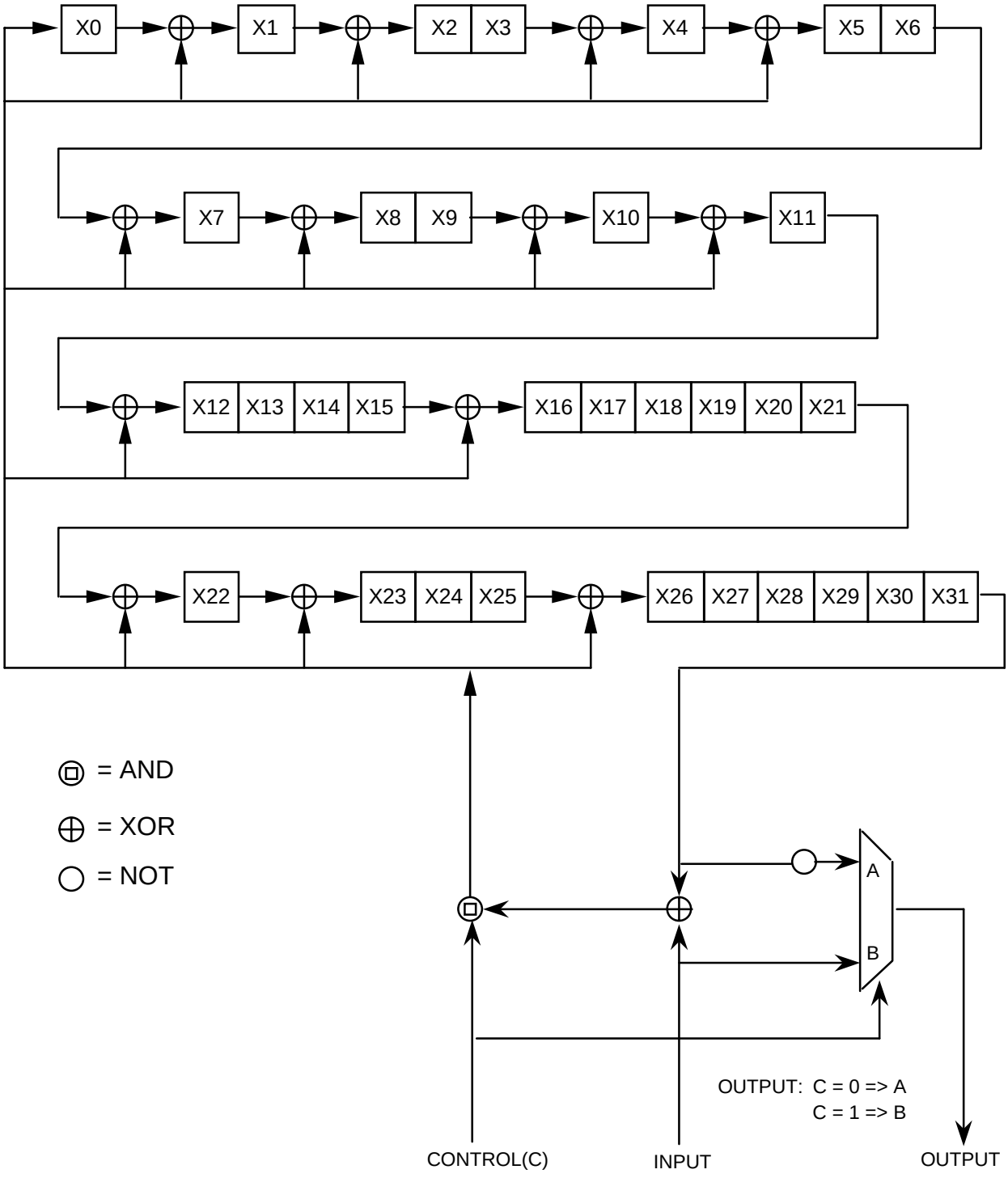

Figure B.1 – FCS implementation example

Copyright International Organization for Standardization
Reproduced by IHS under license with ISO
No reproduction or networking permitted without license from IHS
Not for Resale

FCS checking in the receiver begins with the shift register loaded to all ones. Control is then held at one while the received bits are shifted into Input. When the last bit of the input sequence has been processed, the shift register will contain the sequence C(X) if no errors occurred during transmission.

B.5 Related standards

Additional information on the FCS may be found in the following standards:

a) American National Standard for Advanced Data Communication Control Procedures (ADCCP), ANSI X3.66-1979 (Section 12 and Annex D).

b) Telecommunications; Synchronous Bit Oriented Data Link Control Procedures (Advanced Data Communications Control Procedures), FED-STD-1003A, available from GSA Specification Section, 7 & D Street, S. W., Washington, DC 20407.

Copyright International Organization for Standardization
Reproduced by IHS under license with ISO
No reproduction or networking permitted without license from IHS Not for Resale

Annex C
(informative)

Bridging

This annex only describes aspects of bridging that require FDDI MAC support. Additional information regarding bridging can be found in ISO/IEC 8802 documents and ISO/IEC 10038.

C.1 Bridge architectures

Two bridging techniques have been defined for ISO/IEC 8802 LANs and are described in ISO/IEC 10038:

a) Transparent bridging.

b) Source Routing-enhanced Transparent (SRT) bridging.

Optional capabilities have been specified within this part of ISO/IEC 9314 to support bridging:

a) Passing Source Address, Routing Information and Frame Check Sequence fields via the MA_UNITDATA primitives (see 6.1.1.1, 6.2.1.1).

b) Destination Address recognition for forwarding of frames from an FDDI network to another local area network (see 8.3.5).

c) An alternative frame stripping mechanism that allows bridges to transmit frames with Source Address not equal to the forwarding MAC's individual address (see 8.1.3).

d) Rules for setting of control indicators by bridges and other stations on an FDDI ring (see 7.3.9.2, 7.3.9.3).

These MAC-2 bridging capabilities are interoperable with non-bridge FDDI stations conforming to either ISO 9314-2, the first released MAC standard (MAC-1), or to MAC-2. The two bridging techniques referenced above can be implemented in MAC-1 or MAC-2 based stations; however, if such bridges do not conform to the MAC-2 bridging specifications, they may cause interoperability problems in rings containing some permitted conforming MAC-1 or MAC-2 stations.

In order to ensure interoperability, bridge implementations conforming to either MAC-1 or MAC-2 should follow the recommendations stated in this annex.

Bridges with duplicate MAC addresses can cause severe operational problems in an FDDI network, including overstripping, loss of the token, and Beacon/Claim oscillation. It is strongly recommended that the bridging capabilities not be enabled unless the station has successfully completed the duplicate address detection protocol specified in the part of ISO/IEC 9314 on SMT.

C.2 Destination Address recognition

Transparent bridging uses the Destination Address field of an FDDI frame to determine if a frame should be forwarded. The selection of frames to be forwarded is called filtering. The MAC receiver includes recognition of a set of addresses. In a bridge, this set of addresses logically includes addresses of stations for which frames are to be forwarded. For a detailed explanation of the operation of Transparent Bridging, see ISO/IEC 10038.

Copyright International Organization for Standardization
Reproduced by IHS under license with ISO
No reproduction or networking permitted without license from IHS Not for Resale

A Transparent bridge may also be implemented where all frames are copied, or a partial filter function is provided at the MAC. In this case, frames are copied but later discarded before forwarding if further filtering indicates the frame is not to be forwarded.

In a bridge which implements the Source Routing enhancement (i.e. an SRT bridge), the decision to copy a frame for forwarding may alternatively be based on information provided in the Routing Information (RI) field, which may appear between the DA field and the INFO field of the FDDI frame. This presence of this RI field is indicated by the Routing Information Indicator (RII) bit (the most significant bit of the Source Address field) being set to 1. For a detailed explanation of the operation of SRT bridging, see ISO/IEC 10038.

Frames received with FC.FF=00 (MAC or SMT frames) should never be forwarded.

C.3 Indicator setting

If the Transparent bridge filtering function does not cause copying of any frames that would be discarded by subsequent filtering before forwarding, then the bridge may implement an optional status indicator setting protocol, where a bridge copying a frame for forwarding sets the C indicator but not set the A indicator. If the bridge does not meet these filtering requirements or if the A indicator is not received as R, then it repeats the status as received independent of whether the frame is copied.

An optional status clearing capability may be implemented in stations. In this case, a bridge that has not yet learned of a station on the ring can copy a frame for forwarding, before the destination station receives the frame. When a frame is received by a status clearing station with the received A indicator Reset and C indicator Set, the station changes the C indicator to Reset if the frame is addressed to that station and it cannot copy the frame.

A Source Routing bridge sets the A and C indicators if it recognizes and copies the frame for forwarding just as if its address had appeared in the DA field.

C.4 Stripping

A MAC must strip each frame that it transmits into the ring. In the case of both Source Routing and Transparent bridging, the SA and DA fields of the frame contain the original source and ultimate destination stations for the frame. Therefore, when a bridge forwards a frame onto an FDDI ring, it is not possible to use the SA field to recognize frames to be stripped. For this reason, a bridge is required to implement an alternative stripping mechanism. Other stations may also find it useful to implement an alternative stripping mechanism.

A number of different stripping mechanisms can be implemented within the bridge station alone. Any method which is interoperable with the other parts of ISO/IEC 9314 and meets several general criteria may be employed.

Understripping is undesirable because it causes duplicate packets to be delivered to stations on the ring. Any algorithm that stops stripping upon receipt of a valid token cannot have a probability of understripping less than that of a token being erroneously created from a frame. This requires the conversion of the FC field to that of a token and the conversion of two consecutive data or Idle symbols to T symbols. Thus, a limiting factor to the probability of understripping is approximately:

$$1{,}25 \times 10^{-27}$$

In order to prevent understripping more than once in 100 years, the probability of understripping should be:

$$\text{probability(understripping)} \leq 1{,}3 \times 10^{-14}$$

Copyright International Organization for Standardization
Reproduced by IHS under license with ISO
No reproduction or networking permitted without license from IHS Not for Resale

Overstripping is also detrimental to ring performance. It causes frame loss that would otherwise not have occurred. Assuming any other factors which might cause frame loss (e.g. receiver congestion) are eliminated, the frame loss rate is bounded by the link bit error rate.

In order that overstripping not cause an excessive increase in total frame loss rate, it should not cause the loss rate to increase more than 10 % above the loss rate due to link bit errors alone.

Therefore, under heavy load:

probability(frame loss due to overstripping) / probability(frame loss due to link errors) < 0,1

Several mechanisms exist that might be used to meet these frame stripping requirements. A combination of mechanisms may be required to achieve adequate robustness in the stripping algorithm. Some examples, but not all, of mechanisms that might be used as components of stripping algorithms include:

a) Counting the number of frames transmitted and the number of frames stripped.

b) Transmitting one or more My_Void frames before issuing the token to mark the end of a burst of transmitted frames, and stripping until a My_Void frame is received.

c) Stop stripping upon receipt of valid Tokens, other Void frames or MAC frames (e.g. Beacon or Claim frames).

To ensure interoperability of different stripping methods, and to minimize under stripping or over stripping, it is strongly recommended that a bridge:

a) Transmit at least one My_Void frame immediately before issuing a token.

b) Stop stripping when it receives its own My_Void frame or any valid Void frame with an SA other than its individual address.

To ensure interoperability of different stripping methods, an alternative stripping method should stop stripping when it receives a valid token or clears Ring_Operational.

Some stations will be implemented in such a way that a shared resource (e.g., bus or memory bandwidth) will be used at some point in a frame. To allow design of these stations without undesirable performance implications, stripping should begin not later than the seventh symbol after the end of the SA field.

For a frame whose SA is the MAC's individual address, it is only necessary to strip based on the recognition of the SA field.

Copyright International Organization for Standardization
Reproduced by IHS under license with ISO
No reproduction or networking permitted without license from IHS Not for Resale

Annex D
(informative)

Elements of timer calculation

This annex gives example derivations for parameters defined in other parts of ISO/IEC 9314.

The following parameters are used for the purpose of timer calculation. Because the MAC timer values are also a function of other station parameters, appropriate parameters and concepts are assumed as described in this subclause.

D_Max = 1,774 5 ms (default)
= Maximum logical ring latency with Hybrid mode disabled.

D_Max = 2,832 5 ms (default)
= Maximum logical ring latency with Hybrid mode enabled.

D_Max is the maximum latency (circulation delay) for a Starting Delimiter to travel around the logical ring. D_Max consists of the total node delay of all nodes plus the total propagation delay through the cable plant. The FDDI standard on PHY-2 (see ISO 9314-1 and ISO/IEC 9314-7) contains more information related to D_Max.

F_Max = 0,360 5 ms
= Maximum frame time in Basic mode

F_Max = 0,363 9 ms to 46,937 5 ms
= Maximum frame time in Hybrid mode

F_Max consists of the time required to transmit a maximum length frame (8 996 symbols) and a nominal length preamble (P16 symbols). In Basic mode the MAC operates at a data rate of 25 000 000 symbols/s. In Hybrid mode the data rate of the packet data channel varies from 192 000 symbols/s to 24 768 000 symbols/s.

L_Max = 0,003 5 ms
= Maximum transmitter frame set-up time

L_Max consists of the maximum set up time permitted for a station to begin transmission of the first and subsequent frames in State T2 (Transmit Data).

NOTE - L_Max determines the maximum length of the preamble that may normally precede a frame when it is initially transmitted. Considerations of performance make it desirable to transmit the minimum length of preamble possible. If a station exceeds L_Max, then it should issue a well-formed void frame to allow all MAC receivers to reset TVX.

Token_Time = 0,000 88 ms
= Token length in Basic mode

Token_Time = 0,000 89 ms to 0,114 58 ms
= Token length in Hybrid mode

Token_Time consists of the time required to transmit a token (6 symbols) and a nominal length preamble (16 symbols). Token capture and retransmission time is assumed to be on the order of a few symbols and not significant to MAC timer calculations.

S_Min = 0,364 0 ms
= Minimum safety tolerance in Basic mode

S_Min = 0,367 4 ms to 46,941 0 ms
= Minimum safety tolerance in Hybrid mode

Copyright International Organization for Standardization
Reproduced by IHS under license with ISO
No reproduction or networking permitted without license from IHS Not for Resale

S_Min consists of the minimum safety timing tolerance for random noise on the ring. S_Min consists, at a minimum, of one frame of maximum length (F_Max), which may be permuted by noise plus the L_Max that is allowed before placing a frame on the ring after capturing a token.

M_Max = 1 000 (default)
= Maximum number of MAC entities in a logical ring.

M_Max equals the maximum number of MAC entities allowed on the ring. Note that M_Max may be additionally limited by the constraints imposed by D_Max; for example, in the case where two Ports are used with one MAC to create a dual attachment station.

MI_Max = 15,0 ms (default)
= Maximum media interruption time

MI_Max is the maximum media interruption time contributed by the PMD entity.

A_Max = 0,200 ms
= Maximum signal acquisition time

A_Max consists of the sum of the maximum allowed PHY and PMD signal acquisition times (0,100 ms and 0,100 ms respectively).

Claim_FR = 0,002 56 ms
= Claim frame length in Basic mode

Claim_FR consists of the time required to transmit a Claim frame and its Preamble (16 symbols). A minimum length Claim Frame using long (48-bit) addresses is assumed.

Purge_FR = 0,001 615 ms to 0,208 333 ms
= Purge frame length in Hybrid mode

Purge_FR consists of the time required to transmit a Purge frame and its Preamble (four symbols). A minimum length Purge Frame using long (48-bit) addresses is assumed.

The maximum value of TRT, called T_Max, should be several times the maximum ring initialization time to permit stable ring recovery, where:

$$T\_Max > K \times T\_Init$$

$$T\_Max > M \times T\_React + N \times T\_Resp$$

NOTE - K, M, and N are safety factors that provide margins for noise and other asynchronous ring recovery events by other stations.

T_Init is measured from the time the ring is free of spurious noise. It consists of two components where

T_Init = T_React + T_Resp
< 36,7 ms

In the absence of noise,

T_React < MI_Max + D_Max + A_Max + TVX_value
< 23,2 ms

NOTES

1 TVX_value is the actual expiration value of TVX (5,242 88 ms assumed).

2 This derivation for T_React has no relationship to, or dependency upon, the behaviour of the Connection Management and Ring Management protocols in ISO/IEC 9314-6.

Copyright International Organization for Standardization
Reproduced by IHS under license with ISO
No reproduction or networking permitted without license from IHS Not for Resale

For Basic mode,

T_Resp < ((3 x D_Max) + (2 x M_Max x Claim_FR) + S_Min)
< 13,5 ms

For Hybrid mode,

T_Resp < ((2 x D_Max) + (M_Max x Purge_FR) + S_Min)
< 8,0 ms to 303,7 ms

Copyright International Organization for Standardization
Reproduced by IHS under license with ISO
No reproduction or networking permitted without license from IHS Not for Resale

Annex E
(informative)

Bibliography

IEEE 802-1990, *Local and Metropolitian Area Networks - Overview and Architecture*

ISO 9542, *Telecommunications Information Exchange Between Systems*

ANSI X3.66-1979, *Advanced Data Communication Control Procedures (ADCCP)*

FED-STD-1003A, *Telecommunications; Synchronous Bit Oriented Data Link Control Procedures (Advanced Data Communications Control Procedures),* available from GSA Specification Section, 7 & D Street, S.W., Washington, DC 20407

Copyright International Organization for Standardization
Reproduced by IHS under license with ISO
No reproduction or networking permitted without license from IHS Not for Resale

Standards Survey

The IEC would like to offer you the best quality standards possible. To make sure that we continue to meet your needs, your feedback is essential. Would you please take a minute to answer the questions overleaf and fax them to us at +41 22 919 03 00 or mail them to the address below. Thank you!

Customer Service Centre (CSC)

International Electrotechnical Commission
3, rue de Varembé
1211 Genève 20
Switzerland

or

Fax to: **IEC**/CSC at +41 22 919 03 00

Thank you for your contribution to the standards-making process.

Nicht frankieren
Ne pas affranchir

Non affrancare
No stamp required

A Prioritaire

RÉPONSE PAYÉE

SUISSE

Customer Service Centre (CSC)
International Electrotechnical Commission
3, rue de Varembé
1211 GENEVA 20
Switzerland

Copyright International Organization for Standardization
Reproduced by IHS under license with ISO
No reproduction or networking permitted without license from IHS
Not for Resale

Q1 Please report on **ONE STANDARD** and **ONE STANDARD ONLY**. Enter the exact number of the standard: *(e.g. 60601-1-1)*

.....

Q2 Please tell us in what capacity(ies) you bought the standard *(tick all that apply).* I am the/a:

purchasing agent ❑
librarian ❑
researcher ❑
design engineer ❑
safety engineer ❑
testing engineer ❑
marketing specialist ❑
other.....

Q3 I work for/in/as a: *(tick all that apply)*

manufacturing ❑
consultant ❑
government ❑
test/certification facility ❑
public utility ❑
education ❑
military ❑
other.....

Q4 This standard will be used for: *(tick all that apply)*

general reference ❑
product research ❑
product design/development ❑
specifications ❑
tenders ❑
quality assessment ❑
certification ❑
technical documentation ❑
thesis ❑
manufacturing ❑
other.....

Q5 This standard meets my needs: *(tick one)*

not at all ❑
nearly ❑
fairly well ❑
exactly ❑

Q6 If you ticked NOT AT ALL in Question 5 the reason is: *(tick all that apply)*

standard is out of date ❑
standard is incomplete ❑
standard is too academic ❑
standard is too superficial ❑
title is misleading ❑
I made the wrong choice ❑
other .....

Q7 Please assess the standard in the following categories, using the numbers:
(1) unacceptable,
(2) below average,
(3) average,
(4) above average,
(5) exceptional,
(6) not applicable

timeliness.....
quality of writing.....
technical contents.....
logic of arrangement of contents .....
tables, charts, graphs, figures.....
other .....

Q8 I read/use the: *(tick one)*

French text only ❑
English text only ❑
both English and French texts ❑

Q9 Please share any comment on any aspect of the IEC that you would like us to know:

.....
.....
.....
.....
.....
.....
.....
.....
.....
.....
.....
.....

Copyright International Organization for Standardization
Reproduced by IHS under license with ISO
No reproduction or networking permitted without license from IHS
Not for Resale

Enquête sur les normes

La CEI ambitionne de vous offrir les meilleures normes possibles. Pour nous assurer que nous continuons à répondre à votre attente, nous avons besoin de quelques renseignements de votre part. Nous vous demandons simplement de consacrer un instant pour répondre au questionnaire ci-après et de nous le retourner par fax au +41 22 919 03 00 ou par courrier à l'adresse ci-dessous. Merci !

Centre du Service Clientèle (CSC)

Commission Electrotechnique Internationale
3, rue de Varembé
1211 Genève 20
Suisse

ou

Télécopie: **CEI**/CSC +41 22 919 03 00

Nous vous remercions de la contribution que vous voudrez bien apporter ainsi à la Normalisation Internationale.

Nicht frankieren
Ne pas affranchir

Non affrancare
No stamp required

A Prioritaire

RÉPONSE PAYÉE

SUISSE

Centre du Service Clientèle (CSC)
Commission Electrotechnique Internationale
3, rue de Varembé
1211 GENÈVE 20
Suisse

Copyright International Organization for Standardization
Reproduced by IHS under license with ISO
No reproduction or networking permitted without license from IHS

Not for Resale

Q1 Veuillez ne mentionner qu'**UNE SEULE NORME** et indiquer son numéro exact: (*ex. 60601-1-1)*

.....

Q2 En tant qu'acheteur de cette norme, quelle est votre fonction?
(cochez tout ce qui convient)
Je suis le/un:

agent d'un service d'achat ❑
bibliothécaire ❑
chercheur ❑
ingénieur concepteur ❑
ingénieur sécurité ❑
ingénieur d'essais ❑
spécialiste en marketing ❑
autre(s).....

Q3 Je travaille:
(cochez tout ce qui convient)

dans l'industrie ❑
comme consultant ❑
pour un gouvernement ❑
pour un organisme d'essais/ certification ❑
dans un service public ❑
dans l'enseignement ❑
comme militaire ❑
autre(s).....

Q4 Cette norme sera utilisée pour/comme
(cochez tout ce qui convient)

ouvrage de référence ❑
une recherche de produit ❑
une étude/développement de produit ❑
des spécifications ❑
des soumissions ❑
une évaluation de la qualité ❑
une certification ❑
une documentation technique ❑
une thèse ❑
la fabrication ❑
autre(s).....

Q5 Cette norme répond-elle à vos besoins:
(une seule réponse)

pas du tout ❑
à peu près ❑
assez bien ❑
parfaitement ❑

Q6 Si vous avez répondu PAS DU TOUT à Q5, c'est pour la/les raison(s) suivantes:
(cochez tout ce qui convient)

la norme a besoin d'être révisée ❑
la norme est incomplète ❑
la norme est trop théorique ❑
la norme est trop superficielle ❑
le titre est équivoque ❑
je n'ai pas fait le bon choix ❑
autre(s) .....

Q7 Veuillez évaluer chacun des critères ci-dessous en utilisant les chiffres
(1) inacceptable,
(2) au-dessous de la moyenne,
(3) moyen,
(4) au-dessus de la moyenne,
(5) exceptionnel,
(6) sans objet

publication en temps opportun .....
qualité de la rédaction.....
contenu technique .....
disposition logique du contenu .....
tableaux, diagrammes, graphiques, figures.....
autre(s) .....

Q8 Je lis/utilise: *(une seule réponse)*

uniquement le texte français ❑
uniquement le texte anglais ❑
les textes anglais et français ❑

Q9 Veuillez nous faire part de vos observations éventuelles sur la CEI:

.....
.....
.....
.....
.....
.....

--`,,`-`-`,,`,,`,`,,`---

Copyright International Organization for Standardization
Reproduced by IHS under license with ISO
No reproduction or networking permitted without license from IHS

Not for Resale

Copyright International Organization for Standardization
Reproduced by IHS under license with ISO
No reproduction or networking permitted without license from IHS
Not for Resale

ISBN 2-8318-4471-1



ICS 35.100.10

Typeset and printed by the IEC Central Office
GENEVA, SWITZERLAND

Copyright International Organization for Standardization
Reproduced by IHS under license with ISO
No reproduction or networking permitted without license from IHS

Not for Resale