INTERNATIONAL STANDARD

ISO/IEC 9314-4

First edition
1999-10

Information technology –
Fibre distributed data interface (FDDI) –

Part 4:
Single-mode fibre physical layer medium dependent (SMF-PMD)

Reference number
ISO/IEC 9314-4:1999(E)

Copyright International Organization for Standardization
Reproduced by IHS under license with ISO
No reproduction or networking permitted without license from IHS

Not for Resale

--`,,`,,`-`-`,,`,,`,`,,`---

Copyright International Organization for Standardization
Reproduced by IHS under license with ISO
No reproduction or networking permitted without license from IHS

Not for Resale

INTERNATIONAL STANDARD

ISO/IEC 9314-4

First edition
1999-10

Information technology –
Fibre distributed data interface (FDDI) –

Part 4:
Single-mode fibre physical layer medium dependent (SMF-PMD)

© ISO/IEC 1999

All rights reserved. Unless otherwise specified, no part of this publication may be reproduced or utilized in any form or by any means, electronic or mechanical, including photocopying and microfilm, without permission in writing from the publisher.

ISO/IEC Copyright Office • Case postale 56 • CH-1211 Genève 20 • Switzerland



PRICE CODE U

For price, see current catalogue

Copyright International Organization for Standardization
Reproduced by IHS under license with ISO
No reproduction or networking permitted without license from IHS

Not for Resale

CONTENTS

Page

FOREWORD 4

INTRODUCTION 5

Clause

1 Scope 7

2 Normative references 8

3 Concepts 9

3.1 General Description 9

3.2 Environment 10

3.2.1 Data Center Environment 10

3.2.2 Office/Building Environment 10

3.2.3 Campus Environment 10

3.2.4 Multi-campus Environment 11

3.3 Definitions 11

3.4 Acronyms 14

3.5 Conventions 15

4 Services 18

4.1 General Description 18

4.2 PMD-to-PHY Services 18

4.2.1 PM_UNITDATA.request 19

4.2.2 PM_UNITDATA.indication 19

4.2.3 PM_SIGNAL.indication 20

4.3 PMD-to-SMT Services 20

4.3.1 SM_PM_CONTROL.request 21

4.3.2 SM_PM_BYPASS.request 21

4.3.3 SM_PM_SIGNAL.indication 22

5 Media Attachment 24

5.1 General 24

5.2 Media Interface Connector 24

5.2.1 Keying Detail 26

6 Media Signal Interface 27

6.1 General Description 27

6.2 Active Output Interface 28

6.2.1 Characteristics 28

6.2.2 Pulse Envelope Test 28

6.3 Active Input Interface 31

6.4 Station Bypass Interface 31

6.4.1 Characteristics 31

6.4.2 Station Bypass Timing Definitions 33

7 Interface Signals 33

7.1 General Description 33

7.2 Optical Receiver 33

7.2.1 Signal_Detect 34

7.3 Optical Transmitter 35

Copyright International Organization for Standardization
Reproduced by IHS under license with ISO
No reproduction or networking permitted without license from IHS Not for Resale

Clause Page

8 Cable Plant Interface Specification 36
8.1 Cable Plant Specification 36
8.1.1 Cable Plant Attenuation 36
8.1.2 Fibre, Optical 37
8.1.3 Fibre, Dimensions 37
8.1.4 Fixed Attenuation 37
8.2 Bypassing 37
8.3 Connectors and Splices 37
8.3.1 Optical Return Loss 37

Annex A (informative) Test Methods 38
Annex B (informative) Cable Plant Usage 43
Annex C (informative) Electrical Interface Specifications 46
Annex D (informative) System Jitter Allocations 49
Annex E (informative) Keying Considerations 51

Table 1 – Characteristics of Category I and II Active Output Interfaces 28
Table 2 – Characteristics of Category I and II Active Input Interface Signals 31
Table 3 – Characteristics of Category I Optical Bypass Implementations 31
Table 4 – Summary of Clause 7 35
Table 5 – Active Input/Output Interface Combinations 36
Table 6 – Fibre Optical Parameters 37
Table 7 – Fibre Dimensions 37

Figure 1 – FDDI Links and Connections 16
Figure 2 – FDDI Topology Example 17
Figure 3 – Dual Attachment PMD Services 23
Figure 4 – Example of Media Interface Connector (MIC) Plug 25
Figure 5 – SMF-MIC Keying Details (Wavelength Option 1) 26
Figure 6 – Category I Pulse Envelope Test 29
Figure 7 – Category II Pulse Envelope Test 30
Figure 8 – Station Bypass Timing Characteristics 32
Figure 9 – Signal Detect Thresholds and Timing 34

Copyright International Organization for Standardization
Reproduced by IHS under license with ISO
No reproduction or networking permitted without license from IHS Not for Resale

FOREWORD

ISO (the International Organization for Standardization) and IEC (the International Electrotechnical Commission) form the specialized system for worldwide standardization. National bodies that are members of ISO or IEC participate in the development of International Standards through technical committees established by the respective organization to deal with particular fields of technical activity. ISO and IEC technical committees collaborate in fields of mutual interest. Other international organizations, governmental and non-governmental, in liaison with ISO and IEC, also take part in the work.

In the field of information technology, ISO and IEC have established a joint technical committee, ISO/IEC JTC 1. Draft International Standards adopted by the joint technical committee are circulated to national bodies for voting. Publication as an International Standard requires approval by at least 75% of the national bodies casting a vote.

International Standard ISO/IEC 9314-4 was prepared by Joint technical Committee ISO/IEC JTC 1 *Information technology*, Subcommittee SC 25*, Interconnection of information technology equipment.*

ISO/IEC 9314 consists of the following parts, under the general title *Information technology – Fibre Distributed Data Interface (FDDI):*

– *Part 1: Token Ring Physical Layer Protocol (PHY)*
– *Part 2: Token Ring Media Access Control (MAC)*
– *Part 3: Token Ring Physical Medium Dependent Layer (PMD)*
– *Part 4: Single Mode Fibre Physical Layer Medium Dependent (SMF-PMD)*
– *Part 5: Hybrid Ring Control (HRC)*
– *Part 6: Token Ring Station Management (SMT)*
– *Part 7: Physical Layer Protocol (PHY-2)*
– *Part 8: Token Ring Media Access Control-2 (MAC-2)*
– *Part 9: FDDI Low-Cost Fibre – Physical Medium Dependent (LCF-PMD)*
– *Part 10: Token Ring Twisted Pair Physical layer Medium Dependent (TP-PMD)*
– *Part 13: Conformance Test Protocol Implementation Conformance Statement proforma (CT-PICS)*
– *Part 20: Physical Medium Dependent Conformance Testing (PMD-ATS)*
– *Part 21: Physical Layer Protocol Conformance Testing (PHY-ATS)*
– *Part 25: Abstract Test Suite for FDDI – Station Management Conformance Testing (SMT-ATS)*
– *Part 26: Media Access Control Conformance Testing (MAC-ATS)*

--`,,`,,`-`-`,,`,,`,`,,`---

Copyright International Organization for Standardization
Reproduced by IHS under license with ISO
No reproduction or networking permitted without license from IHS Not for Resale

INTRODUCTION

The Fibre Distributed Data Interface (FDDI) is intended for use in a high-performance general purpose multistation network and is designed for efficient operation with a peak data rate of 100 megabits per second. It uses a token ring architecture. This part of ISO/IEC 9314 extends the basic FDDI by allowing both multimode and single-mode fibre, (MMF and SMF respectively), as transmission media. The basic FDDI provides for hundreds of stations operating over an extent of many kilometers. The individual link lengths supported by the basic FDDI are limited to two (2) kilometers by the characteristics of the multimode fibre it specifies. This extension to the basic FDDI standard allows links to about 60 kilometers depending on cable plant characteristics, by making it possible to include single-mode fibre links in a standard FDDI network.

The Single-mode Physical Layer Medium Dependent (SMF-PMD) specifies the lower sublayer of the Physical Layer for the FDDI. As such, it presents the specifications for conforming FDDI attachment devices at the interface to the single-mode optical network. This includes power levels and characteristics of the optical transmitter and receiver, interface optical signal requirements including jitter, the connector receptacle footprint, the requirements of conforming FDDI single-mode fibre cable plants, and the permissible BER.

SMF-PMD provides for extension of the set of basic standards for FDDI that includes the following standards:

a) A Media Access Control (MAC) standard, which specifies the lower sublayer of the Data Link Layer for FDDI, including access to the medium, data framing, addressing, and data checking;

b) A Physical Medium Dependent (PMD) standard which is the alternative standard to this document, when using MMF rather than SMF;

c) A Physical Layer Protocol (PHY) standard, which specifies the upper sublayer of the Physical Layer for FDDI, including encode/decode, clocking, and data framing;

d) A Station Management (SMT) standard, which specifies the local portion of the system management application process for FDDI, including the control required for proper operation of a station in an FDDI ring;

The idea of developing a new high speed data interface for computers based on the use of optical fibre was first raised in an October 1982 meeting. An ad hoc task group was formed to examine the issues and three project proposals, for the FDDI Physical, Data Link, and Network layers were developed and subsequently approved.

Initial proposals for the Media Access Control (MAC), corresponding to the lower half of the Data Link Layer, and for the Physical (PHY), corresponding to the Physical Layer, were both submitted in June 1983. FDDI adopted the structures of the ISO/IEC 8802 Series, and early work indicated that the FDDI MAC could be developed to operate under the Logical Link Control (LLC) described in the ISO/IEC 8802 series. This decision, in effect, obviated the development of LLC or Network Layer standards unique to FDDI. MAC has been published as ISO/IEC 9314-2.

In early 1984 a need was recognized for a separate Station Management (SMT) document. This development work remains under way on ISO/IEC 9314-6.

Recognizing that fibre technology was not yet then sufficiently settled and that critical FDDI development work was dependent upon the protocol portions of the PHY document, the Physical Layer was divided into two sublayers (PHY and PMD), with the PHY document retaining only the upper sublayer of the Physical Layer. PHY was subsequently published as ISO/IEC 9314-1.

Meanwhile, issues concerning the lower sublayer of the Physical Layer for multimode FDDI were being addressed. That work led to the publication of ISO/IEC 9314-3 FDDI PMD.

Copyright International Organization for Standardization
Reproduced by IHS under license with ISO
No reproduction or networking permitted without license from IHS Not for Resale

In June 1987 the need was recognized for FDDI to support station-to-station distances longer than the 2 kilometers limit of the MMF design. The project objective was to stay as close as possible to the PMD standard and in particular to have the same interfaces with PHY and SMT.

With the FDDI MAC, the FDDI PHY and the multimode FDDI PMD, the FDDI SMF-PMD standard represents an alternative PMD in the set of standards that constitute FDDI.

Copyright International Organization for Standardization
Reproduced by IHS under license with ISO
No reproduction or networking permitted without license from IHS Not for Resale

INFORMATION TECHNOLOGY – FIBRE DISTRIBUTED DATA INTERFACE (FDDI) –

Part 4: Single-mode fibre physical layer medium dependent (SMF-PMD)

1 Scope

This part of ISO/IEC 9314 specifies the Single-mode fibre Physical Layer–Medium Dependent (SMF-PMD) requirements for the Fibre Distributed Data Interface (FDDI).

FDDI provides a high bandwidth (100 megabits per second) general purpose interconnection among computers and peripheral equipment using a fibre optic waveguide as the transmission medium. The FDDI may be configured to support a sustained transfer rate of approximately 80 megabits (10 megabytes) per second. The FDDI may not meet the response time requirements of all unbuffered high speed devices. The FDDI establishes the connection among many stations distributed over distances of several kilometers in extent. Default values for FDDI were calculated on the basis of 1000 physical connections and a total fibre path length of 200 kilometers (see the MAC Standard – ISO/IEC 9314-2 or ISO/IEC 9314-8).

The FDDI consists of:

1) The Physical Layer Medium Dependent (PMD) is specified in four alternative standards:
   a) ISO/IEC 9314-3 (FDDI PMD) corresponding to multimode fibre (MMF) which actually means "FDDI MMF-PMD".
   b) This standard ISO/IEC 9314-4 (SMF-PMD) which contains the requirements for single-mode fibre (SMF) physical connections between stations.
   c) ISO/IEC 9314-9 (FDDI LCF-PMD), an alternative lower cost multimode fibre (LCF) for shorter distances.
   d) ISO/IEC 9314-10 (FDDI TP-PMD), a copper twisted pair (TP) alternative.

   An FDDI ring can be made up of all these alternatives. (For some restrictions see 6.4). The PMD provides all services necessary to transport a suitably coded digital bit stream from station to station. The SMF-PMD specifies the point of interconnection requirements for FDDI stations and cable plants at both sides of the Media Interface Connector (MIC) for conforming stations utilizing single-mode fibre.

   SMF-PMD includes the following:
      i) The optical power budgets for two (2) categories of Active Output and Active Input Interfaces using single-mode fibre optic cables and optical bypass switches
      ii) The MIC Receptacle mechanical mating requirements including the keying features
      iii) The single-mode fibre optic cable requirements
      iv) The services provided by PMD to PHY and SMT
2) A Physical Layer Protocol (PHY), which provides connection between multimode or single-mode PMD and the Data Link Layer (DLL). PHY establishes clock synchronization with the upstream code-bit data stream and decodes this incoming code-bit stream into an equivalent symbol stream for use by the higher layers. PHY provides encoding and decoding between data and control indicator symbols and code-bits, medium conditioning and initializing, the synchronization of incoming and outgoing code-bit clocks, and the delineation of octet boundaries as required for the transmission of information to or from higher layers. Information to be transmitted on the interface medium is encoded by the PHY into a grouped transmission code.
3) A Data Link Layer (DLL), which controls the accessing of the medium and the generation and verification of frame check sequences to assure the proper delivery of valid data to the

Copyright International Organization for Standardization
Reproduced by IHS under license with ISO
No reproduction or networking permitted without license from IHS Not for Resale

higher layers. DLL also concerns itself with the generation and recognition of device addresses and the peer-to-peer associations within the FDDI network. For purpose of the PHY, references to DLL are made in terms of the Media Access Control (MAC) entity, which is the lowest sublayer of DLL.

4) A Station Management (SMT), which provides the control necessary at the station level to manage the processes underway in the various FDDI layers such that a station may work cooperatively on a ring. SMT provides services such as control of configuration management, fault isolation and recovery, and scheduling procedures.

This part of ISO/IEC 9314 is a supporting document to ISO/IEC 9314-1 which should be read in conjunction with it.

The SMT document ISO/IEC 9314-6 should be consulted for information pertaining to supported FDDI station and network configurations.

The set of FDDI standards specifies the interfaces, functions and operations necessary to insure interoperability between conforming FDDI implementations. This part of ISO/IEC 9314 is a functional description. Conforming implementations may employ any design technique which does not violate interoperability.

2 Normative references

The following normative documents contain provisions which, through reference in this text, constitute provisions of this part of ISO/IEC 9314. For dated references, subsequent amendments to, or revisions of, any of these publications do not apply. However, parties to agreements based on this part of ISO/IEC 9314 are encouraged to investigate the possibility of applying the most recent editions of the normative documents indicated below. For undated references, the latest edition of the normative document referred to applies. Members of ISO and IEC maintain registers of currently valid International Standards.

ISO/IEC 9314-1:1989, Information technology – Fibre Distributed Data Interface (FDDI) – Part 1: Token Ring Physical Layer Protocol (PHY)

ISO/IEC 9314-2:1989, Information technology – Fibre Distributed Data Interface (FDDI) – Part 2: Token Ring Media Access Control (MAC)

ISO/IEC 9314-3:1990, Information technology – Fibre Distributed Data Interface (FDDI) – Part 3: Token Ring Physical Medium Dependent Layer (PMD)

ISO/IEC 9314-6:1998, Information technology – Fibre Distributed Data Interface (FDDI) – Part 6: Token Ring Station Management (SMT)

ISO/IEC 9314-7:1998, Information technology – Fibre Distributed Data Interface (FDDI) – Part 7: Physical Layer Protocol (PHY-2)

ISO/IEC 9314-8:1998, Information technology – Fibre Distributed Data Interface (FDDI) – Part 8: Token Ring Media Access Control-2 (MAC-2)

ISO/IEC 11801:1995, Information technology – Generic cabling for customer premises

IEC 60793-1-1:1999, Optical fibres – Part 1-1: Generic specification – General

IEC 60793-1-2:1995, Optical fibres – Part 1: Generic specification – Section 2: Measuring methods for dimensions

IEC 60793-1-3:1995, Optical fibres – Part 1: Generic specification – Section 3: Measuring methods for mechanical characteristics

--`,,`,,`,`,,`---
Copyright International Organization for Standardization
Reproduced by IHS under license with ISO
No reproduction or networking permitted without license from IHS Not for Resale

IEC 60793-1-4:1995, Optical fibres – Part 1: Generic specification – Section 4: Measuring methods for transmission and optical characteristics

IEC 61300-3-4:1998, Fibre optic interconnecting devices and passive components – Basic test and measurement procedures – Part 3-4: Examination and measurements – Attenuation

IEC 61300-3-6:1997, Fibre optic interconnecting devices and passive components – Basic test and measurement procedures – Part 3-6: Examinations and measurements – Return loss

IEC 61300-3-9:1997, Fibre optic interconnecting devices and passive composants – Basic test and measurement procedures – Part 3-9: Examinations and measurements – Far-end crosstalk

IEC 61754-12: under development: Fibre Optic Connector Interfaces, Part-12: Type FS connector family

3 Concepts

3.1 General Description

A ring network consists of a set of stations logically connected as a serial string of stations and transmission media to form a closed loop. Information is transmitted sequentially, as a stream of suitably encoded symbols, from one active station to the next. Each station generally regenerates and repeats each symbol and serves as the means for attaching one or more devices to the network for the purpose of communicating with other devices on the network. The method of actual physical attachment to the FDDI network may vary and is dependent on specific application requirements as described in subsequent paragraphs.

The basic building block of an FDDI network is a Physical Connection as shown in Figure 1. A Physical Connection in the FDDI network consists of the Physical Layers of two stations which are, connected over the transmission medium by a Primary Link and a Secondary Link. The two Physical Links of a Physical Connection must use the same fibre technology at the MIC: both multimode or both single-mode. A Primary Link consists of an output, called Primary Out, of a Physical Layer, communicating over a Primary medium to the input, called Primary In, of a second Physical Layer. The Secondary Link consists of the output, called Secondary Out, of the second Physical Layer communicating over a secondary medium to the input, called Secondary In, of the first Physical Layer. Physical Connections may be subsequently logically connected within stations, via attached MACs or other means, to the network. As such, the function of each station is implementer defined and is determined by the specific application or site requirements.

Two classes of stations are defined; dual (attachment) and single (attachment). Physical FDDI rings may be composed only of dual stations which have two PHY entities to accommodate the dual (counter-rotating) rings. Concentrators provide additional PHY entities for the attachment of single stations which have only one PHY and thus cannot directly attach to the physical FDDI dual ring. A dual station, or one-half of a dual station, may be substituted for a single station in attaching to a concentrator. The logical FDDI ring consists of all attached stations.

This part of ISO/IEC 9314 specifies two categories of Active Output and Input Interfaces and allows for the four corresponding combinations. With this approach cable plant losses from 0 dB to 32 dB can be accommodated. This allows for Repeaterless Physical Link lengths up to 40 km to 60 kilometers.

Copyright International Organization for Standardization
Reproduced by IHS under license with ISO
No reproduction or networking permitted without license from IHS Not for Resale

The example of Figure 2 shows the concept of using multiple Physical Connections to create logical rings of combinations of SMF and MMF media. As shown, the logical sequence of MAC connections is stations 1, 3, 5, 8, 9, 10, and 11. Stations 2, 3, 4, and 6 form a physical ring. Stations 1, 5, 7, 10 and 11 are attached to the FDDI network by lobes branching out from the stations forming the physical ring. Stations 8 and 9 are in turn attached to the FDDI network by lobes branching out from station 7. Stations 2, 4, 6, and 7 are concentrators, serving as the means for logically connecting multiple stations to the physical ring. Concentrators may or may not have MAC entities and full station functionality, although the example of Figure 2 shows them without.

Connection to the physical medium as established by SMF-PMD is controlled by the station insertion and removal algorithms of Station Management (SMT) which are beyond the scope of this part of ISO/IEC 9314.

3.2 Environment

As shown in Figure 2 and as described in 3.1, an FDDI network consists of a large number of connected stations which may be distributed over a large area when using SMF-PMD Physical Connections. Configuring an FDDI network requires proper selection of the category of the Physical Connection, taking into account constraints described in this part of ISO/IEC 9314 as well as MAC, PHY and SMT portions of the FDDI standard. SMT establishes the Physical Connections between stations, and the correct internal station configurations, to create an FDDI network of logical rings.

It is understood that restrictions of the transmission media as defined (i.e., dynamic range, bandwidth and length) may place limits on realizable physical configurations. Tradeoffs may be made within specific site applications, such as distance vs. optical bypass, and media consistent with these limitations. While not intended to be limiting, the FDDI has been defined to serve four major application environments including:

3.2.1 Data Center Environment

The data center environment is characterized by a relatively small number of stations, typically mainframe computers and peripheral equipment, where a high degree of reliability and fault tolerance is required. The FDDI network in a data center environment is comprised of a preponderance of dual stations with relatively few, if any, concentrators. In this environment, it is desirable that two stations maintain unimpaired operation even under the circumstance where up to four intervening stations are powered down thereby causing their optical bypass switches to be in the active connection path between the communicating stations. This environment assumes a total fibre length not exceeding 400 meters between two communicating stations.

3.2.2 Office/Building Environment

The office/building environment is characterized by both a relatively large number of single attachment stations (typically smaller computers, communications concentrators, workstations, and peripherals) and by a radial wiring scheme to connect these stations. Moreover, the stations are frequently powered down by their users. Concentrators, which are typically always powered on, are often used to attach these stations to the FDDI network because they facilitate radial wiring and because concentrators allow any set of the single attachment stations to be without power.

3.2.3 Campus Environment

The campus environment is characterized by stations distributed across multiple buildings where links of up to 2 kilometers may be encountered. Such a distance requirement is expected to be uncommon and would not allow the bypass techniques that are useful in the Data Center environment. This application is typically used for trunk lines between office/building and/or data center environments.

--`,,`,,`-`-`,,`,,`,`,,`---

Copyright International Organization for Standardization
Reproduced by IHS under license with ISO
No reproduction or networking permitted without license from IHS Not for Resale

3.2.4 Multi-campus Environment

The multi-campus environment is characterized by clusters of stations, located in different campuses or buildings, often separated by distances significantly greater than the maximum 2 kilometers supported by multimode PMD FDDI technology. Multi-campus environments may also include the requirement to traverse rights-of-way owned or controlled by local utilities or government entities.

SMF-PMD Physical Connections can be used in the above four environments for different reasons. In the multi-campus environment, SMF is required to accommodate link lengths greater than the 2 kilometers maximum specified for multimode PMD. SMF support may also be required to accommodate facilities already owned by local common carriers. In the other three environments, the end-user may select SMF for other considerations.

3.3 Definitions

For the purposes of this part of ISO/IEC 9314 the following definitions apply. Furthermore, ISO 9314-1, ISO 9314-2, ISO/IEC 9314-7 and ISO/IEC 9314-8 contain additional definitions of interest.

3.3.1
Active Input Interface (AII)
the active PMD element that detects modulated light from an Active Output Interface via a fibre optic waveguide and converts it to digital electrical signals

3.3.2
Active Output Interface (AOI)
the active PMD element that converts digital electrical signals into modulated light to be transmitted to an Active Input Interface via a fibre optic waveguide

3.3.3
Attenuation
level of optical power loss expressed in units of decibels (dB)

3.3.4
Average Power
the optical power measured using an average reading power meter when the FDDI station is transmitting a stream of Halt symbols

3.3.5
Bit Error Rate (BER)
the number of bits with the wrong detected value divided by the total number of bits transferred

3.3.6
Bypass
the ability of a station to be optically isolated from the network while maintaining the integrity of the ring

3.3.7
Central Wavelength
the weighted average wavelength of the Active Output Interface optical spectrum

3.3.8
Code-bit
the smallest signaling element used by the Physical Layer for transmission on the medium

Copyright International Organization for Standardization
Reproduced by IHS under license with ISO
No reproduction or networking permitted without license from IHS Not for Resale

3.3.9
Concentrator
an FDDI node that provides additional attachment points for stations that are not part of the dual ring

3.3.10
Cut-off Wavelength
In an optical fibre, the wavelength above which light propagates only in a single mode

NOTE The cut-off wavelength of cabled optical fibre, l_{cc}, is typically lower than the cut-off wavelength of uncabled optical fibre.

3.3.11
Dual Attachment Station
a station that offers two attachments to the FDDI network that are capable of accommodating a dual (counter-rotating) ring. It may offer additional attachments (see Concentrator)

3.3.12
Extinction Ratio
the ratio of the low, or off optical power level, (P_L) to the high, or on optical power level, (P_H) when the station is transmitting a stream of Halt symbols

3.3.13
Extinction Ratio (%)
$(P_L/P_H)*100$

3.3.14
Fibre
dielectric material that guides light; waveguide (see Multimode Fibre and Single-mode fibre)

3.3.15
Fibre Optic Cable
a jacketed fibre(s)

3.3.16
Interchannel Isolation
the ability to prevent undesired optical energy from appearing in one signal path as a result of coupling from another signal path; cross talk

3.3.17
Jitter, Data Dependent (DDJ)
jitter that is related to the transmitted symbol sequence. DDJ is caused by the limited bandwidth characteristics and imperfections in the optical channel components. DDJ results from non-ideal individual pulse responses and from variation in the average value of the encoded pulse sequence that may cause base-line wander and may change the sampling threshold level in the receiver

3.3.18
Jitter, Duty Cycle Distortion (DCD)
distortion usually caused by propagation delay differences between low-to-high and high-to-low transitions. DCD is manifested as a pulse width distortion of the nominal baud time

3.3.19
Jitter, Random (RJ)
RJ is due to thermal noise and may be modeled as a Gaussian process. The peak-peak value of RJ is of a probabilistic nature and thus any specific value requires an associated probability

Copyright International Organization for Standardization
Reproduced by IHS under license with ISO
No reproduction or networking permitted without license from IHS Not for Resale

3.3.20
Media Interface Connector (MIC)
an optical fibre connector that connects the fibre media to the FDDI attachment. The MIC consists of two halves. The MIC plug is the male half used to terminate an optical fibre signal transmission cable. The MIC receptacle is the female half that is associated with the FDDI attachment

3.3.21
MIC Plug
the male half of the MIC that terminates an optical signal transmission cable

3.3.22
MIC Receptacle
the fixed or stationary female half of the MIC that is part of an FDDI station

3.3.23
Mode Field Diameter
a measure of the width of the guided optical power's intensity distribution in the core and the cladding of a single-mode fibre

3.3.24
Multimode Fibre (MMF)
multimode fibre is an optical fibre waveguide usually characterized by a core diameter of 50 to 100 µm that will allow a large number of modes to propagate

3.3.25
Optical Fall Time
the time interval for the falling edge of an optical pulse to transition from 90% to 10% of the pulse amplitude

3.3.26
Optical Reference Plane
the plane that defines the optical boundary between the MIC Plug and the MIC Receptacle

3.3.27
Optical Return Loss (ORL)
the ratio (expressed in units of dB) of optical power reflected by a component or an assembly to the optical power incident on a component port when that component or assembly is introduced into a link or system

3.3.28
Optical Rise Time
the time interval for the rising edge of an optical pulse to transition from 10% to 90% of the pulse amplitude

3.3.29
Physical Connection
the full-duplex Physical Layer association between adjacent PHY entities (in concentrators or stations) in an FDDI ring, i.e., a pair of Physical Links

3.3.30
Physical Link
the simplex path (via PMD and attached medium) from the transmit function of one PHY entity to the receive function of an adjacent PHY entity (in concentrators or stations) in an FDDI ring

3.3.31
Primitive
an element of the services provided by one entity to another

Copyright International Organization for Standardization
Reproduced by IHS under license with ISO
No reproduction or networking permitted without license from IHS Not for Resale

3.3.32
Receiver
an optoelectronic circuit that converts an optical signal to an electrical logic signal

3.3.33
Ring
two or more stations wherein information is passed sequentially between active stations, each station in turn examines or copies the information finally returns it to the originating station

3.3.34
Services
the services provided by one entity to a higher entity or to SMT

3.3.35
Single Attachment Station
a station that offers one attachment to the FDDI network

3.3.36
Single-mode Fibre (SMF)
a single-mode fibre is an optical fibre waveguide usually characterized by a very small Mode Field Diameter (9 µm-10 µm). When operated above its cut-off wavelength, it propagates only a single (i.e., fundamental) mode (see Cut-Off Wavelength)

3.3.37
Spectral Width-RMS
the weighted root mean square (RMS) width of the Active Output Interface optical spectrum

3.3.38
Station
an addressable logical and physical node on an FDDI ring capable of transmitting, repeating and receiving information

3.3.39
Transmitter
an optoelectronic circuit that converts an electrical logic signal to an optical signal

3.4 Acronyms

AII	Active Input Interface
AOI	Active Output Interface
BER	Bit Error Rate
DLL	Data Link Layer
FDDI	Fibre Distributed Data Interface
DDJ	Jitter, Data Dependent
DCD	Jitter, Duty Cycle Distortion
RJ	Jitter, Random
MAC	Media Access Control
MIC	Media Interface Connector
MMF	Multimode Fibre
NRZI	Non Return to Zero Inverted
ORL	Optical Return Loss
PHY	Physical Layer Protocol standard
PMD	Physical Medium Dependent standard

Copyright International Organization for Standardization
Reproduced by IHS under license with ISO
No reproduction or networking permitted without license from IHS Not for Resale

RMS	Root Mean Square
SMF	Single-mode Fibre
SMT	Station Management standard

3.5 Conventions

The terms SMT, MAC, PHY and PMD, when used without modifiers, refer specifically to the local instances of these entities. When used without qualifier in this document, the term PMD refers to both the multimode PMD and the SMF-PMD.

Underbars (e.g., control_action) are used as a convenience to mark the name of signals, functions, etc., which might otherwise be misinterpreted as independent individual words if they were to appear in text.

The use of a period (e.g., PM_UNITDATA.request) is equivalent to the use of underbars, except that a period is used as an aid to distinguish modifier words appended to an antecedent expression.

The use of a colon (e.g., N:PM_UNITDATA.request) distinguishes between two or more instances of the same signal where N designates the other source/destination entity.

Copyright International Organization for Standardization
Reproduced by IHS under license with ISO
No reproduction or networking permitted without license from IHS Not for Resale

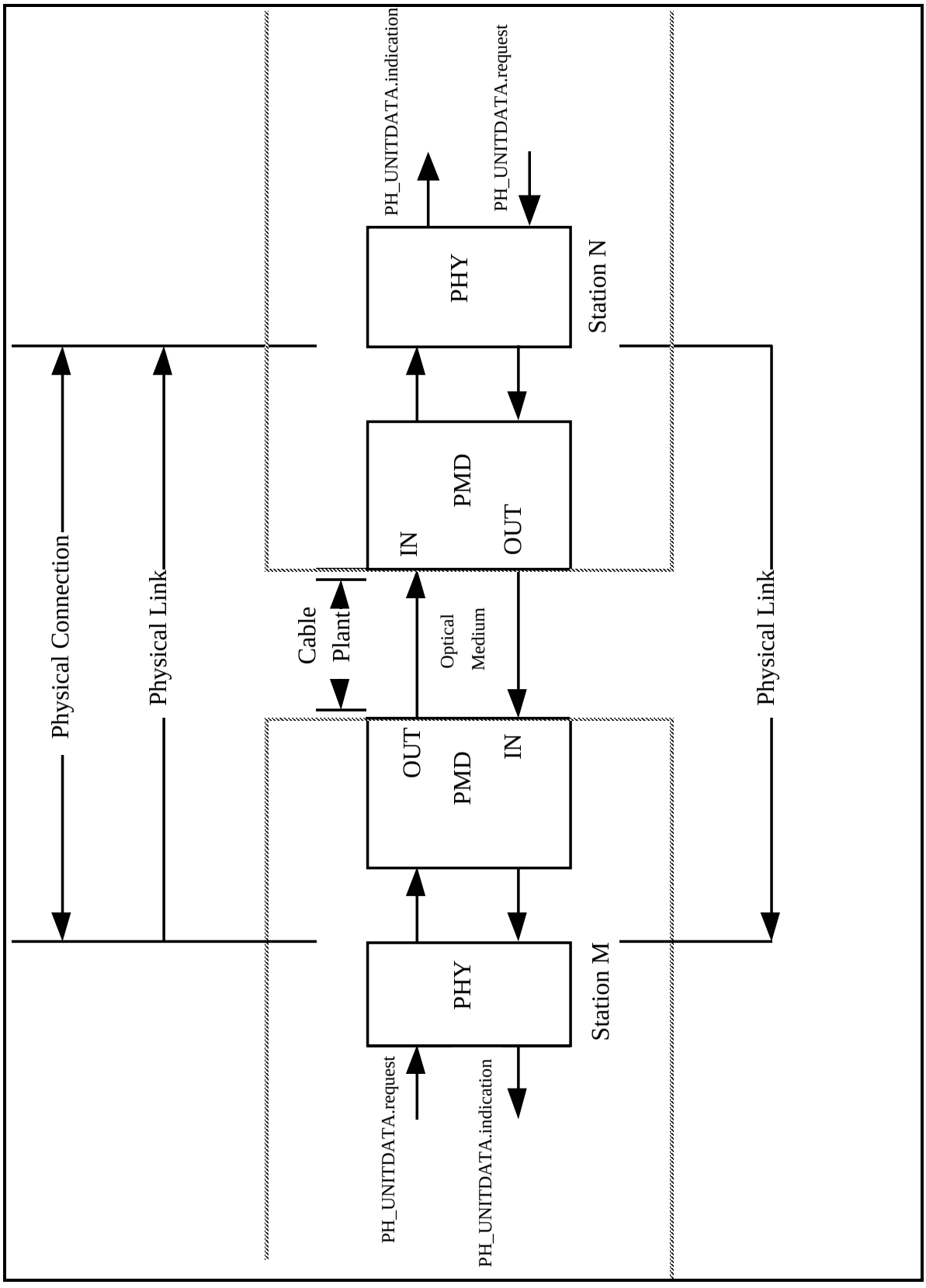

Figure 1 – FDDI Links and Connections

Copyright International Organization for Standardization
Reproduced by IHS under license with ISO
No reproduction or networking permitted without license from IHS
Not for Resale

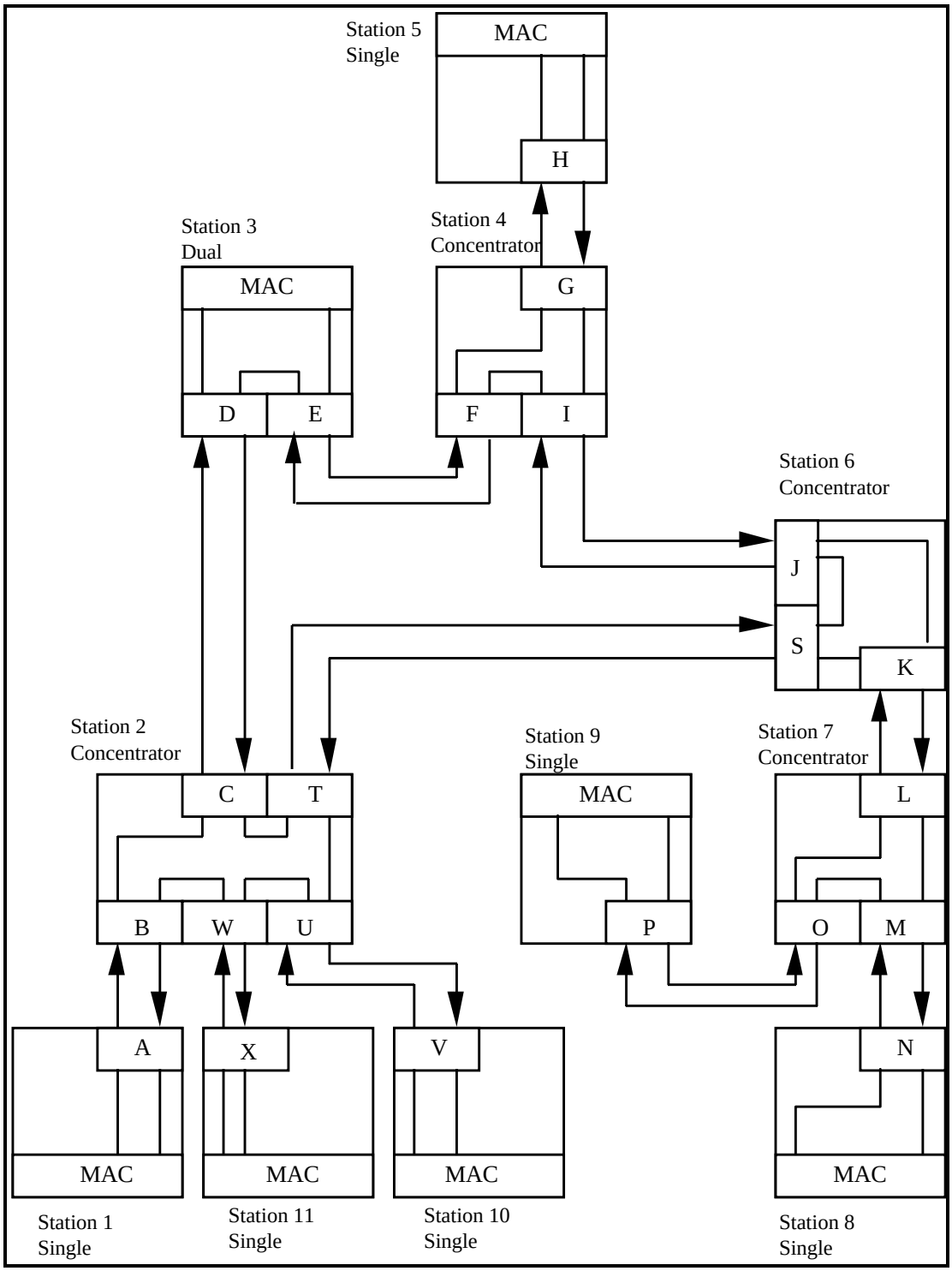

Figure 2 – FDDI Topology Example

Copyright International Organization for Standardization
Reproduced by IHS under license with ISO
No reproduction or networking permitted without license from IHS
Not for Resale

4 Services

4.1 General Description

Clause 4 specifies the services provided by the PMD (see 3.4, Conventions). These services do not imply any particular implementation or any interface. Services described are:

1. PMD services provided to the local Physical Protocol (PHY) entity (indicated by PM_prefix).
2. PMD services provided to the local Station Management (SMT) entity (indicated by SM_PM_ prefix).
3. An optional qualifier is sometimes needed to unambiguously identify a signal where there are multiple instances of the same signal within a service interface (indicated by (N:) prefix). Thus, a prefix of (N:)PM_ or (N:)SM_PM_ indicates that a PMD could duplicate a signal "n" times and identify each signal with a unique qualifier. For example, a PMD in a dual station would use A:PM_ or B:PM_ as prefixes when required, whereas a PMD in a single station may only use PM_ as a prefix. Concentrators may use other qualifiers, such as M1:PM_ through Mn:PM_, to uniquely identify a signal.

Figure 3 shows the block diagram organization of the FDDI Physical Medium Dependent (PMD) including the separate functions, related signals, and interfaces that it contains. This figure is not intended to show physical implementation or physical orientation of the components within an FDDI station. As described, the interfaces and signals between PMD, PHY and SMT are examples and are intended to be logical rather than physical. Any other set of signals that causes the same physical behavior is equally valid.

4.2 PMD-to-PHY Services

This subclause specifies the services provided at the interface between the PMD and the PHY entities of the Physical layer, to allow PHY to exchange an NRZI code-bit stream with peer PHY entities. The PMD parameters have been selected to be compatible with the encoding and decoding techniques provided by the FDDI PHY. PMD translates the encoded electrical data signals to and from optical signals suitable for the fibre medium but does not perform any further encoding or decoding. Additional detail is provided in Clauses 6 and 7 concerning conditions that generate these primitives and PMD actions upon receipt of PHY-generated primitives.

The following primitives are defined:

PM_UNITDATA.request

PM_UNITDATA.indication

PM_SIGNAL.indication

Each primitive includes the information that is passed between the PMD and PHY entities.

Copyright International Organization for Standardization
Reproduced by IHS under license with ISO
No reproduction or networking permitted without license from IHS Not for Resale

4.2.1 PM_UNITDATA.request

This primitive defines the transfer of encoded NRZI data from PHY to PMD.

Semantics of the Primitive:

(N:)PM_UNITDATA.request (
PM_Request (NRZI code)
)

The data conveyed by PM_Request shall be a continuous code-bit sequence.

When Generated:

PHY continuously sends the PMD layer the current NRZI code polarity.

Effect upon Receipt:

Upon receipt of this primitive and of SM_PM_CONTROL.request with a Control_Action parameter of Transmit_Enable, PMD shall convert an electrical NRZI encoded code-bit sequence into the optical domain of the interface medium. While the code bits are represented by transitions of signal state, PMD shall respond to the logic level of PM_UNITDATA.request. PMD shall transmit a low light power level upon receipt of a logic "0" and a high light power level upon receipt of a logic "1".

4.2.2 PM_UNITDATA.indication

This primitive defines the transfer of encoded NRZI data from PMD to PHY.

Semantics of the Primitive:

(N:)PM_UNITDATA.indication (
PM_Indication (NRZI code)
)

The data conveyed by PM_Indication shall be a continuous code-bit sequence.

When Generated:

PMD continuously sends to PHY the current encoded NRZI code.

Effect upon Receipt:

In normal non-Loopback mode, PM_Indication is continuously sampled by the clock recovery and decode functions of the PHY entity.

--`,,`,,`-`-`,,`,,`,`,,`---

Copyright International Organization for Standardization
Reproduced by IHS under license with ISO
No reproduction or networking permitted without license from IHS Not for Resale

4.2.3 PM_SIGNAL.indication

This primitive is generated by PMD and asserted to PHY to indicate the status of the optical signal being received by PMD.

Semantics of the Primitive:

(N:)PM_SIGNAL.indication (
Signal_Detect(status)
)

The Signal_Detect(status) parameter shall indicate whether the quality and optical power level of the inbound optical signal is satisfactory (status = on) or unsatisfactory (status = off). When status = off, then PM_UNITDATA.indication is undefined but actions based on PM_SIGNAL.indication shall be interpreted as if PM_UNITDATA.indication is a continuous logic "0" code-bit sequence.

When Generated:

PMD shall generate this primitive to indicate the status of the Signal_Detect.

Effect Upon Receipt:

The effect of PHY on receipt of this primitive is, when status = off, to enter Quiet_Line-State, and when status = on, to enable detection of other line states.

4.3 PMD-to-SMT Services

The services supplied by PMD allow SMT to control the operation of PMD. The PMD shall perform the requested SMT services preemptively over any requested PHY services. Additional detail is provided in Clauses 6 and 7 concerning conditions that generate these primitives and PMD actions upon receipt of SMT-generated primitives.

The following primitives are defined:

SM_PM_CONTROL.request
SM_PM_BYPASS.request
SM_PM_SIGNAL.indication

Each primitive includes the information that is passed between the PMD and SMT entities.

Copyright International Organization for Standardization
Reproduced by IHS under license with ISO
No reproduction or networking permitted without license from IHS Not for Resale

4.3.1 SM_PM_CONTROL.request

This primitive is generated by SMT and asserted to PMD to force the transmit function to place a logic "0" optical signal on the outbound medium.

Semantics of the Primitive:

(N:)SM_PM_CONTROL.request (Control_Action)

The Control_Action parameter shall include the following: Transmit_Enable and Transmit_Disable.

When Generated:

SMT generates this primitive whenever it wants to enable or disable the PMD optical transmitter.

Effect Upon Receipt:

Receipt of this primitive by PMD with a Control_Action parameter of Transmit_Disable shall cause PMD to transmit a logic "0" optical signal (i.e., low light) preemptively over the PM_UNITDATA.request primitive as described in 6.2.

Receipt of this primitive by PMD with a Control_Action parameter of Transmit_Enable shall cause the PMD to transmit the optical signal requested by the PM_UNITDATA.request primitive. Receipt of this primitive shall not affect PM_SIGNAL.indication or PM_UNITDATA.indication.

4.3.2 SM_PM_BYPASS.request

This primitive is generated by SMT and asserted to PMD to indicate that SMT wants to join or leave the FDDI network.

Semantics of the Primitive:

SM_PM_BYPASS.request (Control_Action)

The Control_Action parameter shall include the following: Insert, Deinsert.

When Generated:

SMT generates this primitive whenever it wants to activate or deactivate the optical switch(es).

Copyright International Organization for Standardization
Reproduced by IHS under license with ISO
No reproduction or networking permitted without license from IHS Not for Resale

Effect Upon Receipt:

Upon receipt of this primitive with a Control_Action parameter of Insert, PMD shall activate the optical switch such that the MIC inbound optical signal from the cable plant is directed to the optical receiver (see Figure 3). The output of the optical transmitter shall be directed to the MIC output to the cable plant.

Upon receipt of this primitive with a Control_Action parameter of Deinsert, PMD shall deactivate the optical switch such that the MIC inbound optical signal from the cable plant is directed through the switch to the MIC output to the cable plant. The output of the optical transmitter shall be directed through the optical switch to the input of the optical receiver. This is called the bypassed mode.

Additional Comments:

Optical bypass switches are optional in a FDDI network. Stations that do not employ optical switches do not require this service. Entities that employ optical switches shall not optically couple multimode PMD Physical Connections and single-mode PMD Physical Connections.

4.3.3 SM_PM_SIGNAL.indication

This primitive is generated by PMD and asserted to SMT to indicate the status of the optical signal level being received by PMD.

Semantics of the Primitive:

```
(N:)SM_PM_SIGNAL.indication     (
                                Signal_Detect(status)
                                )
```

The Signal_Detect(status) parameter shall indicate whether the quality and optical power level of the inbound optical signal level is satisfactory (status = on) or unsatisfactory (status = off). When status = off, then PM_UNITDATA.indication is undefined but actions based on SM_PM_SIGNAL.indication shall be interpreted as if PM_UNITDATA.indication is a continuous logic "0" code-bit sequence.

When Generated:

PMD shall generate this primitive to indicate the status of the Signal_Detect.

Effect Upon Receipt:

The effect of receipt of this primitive on SMT is not defined.

Copyright International Organization for Standardization
Reproduced by IHS under license with ISO
No reproduction or networking permitted without license from IHS Not for Resale

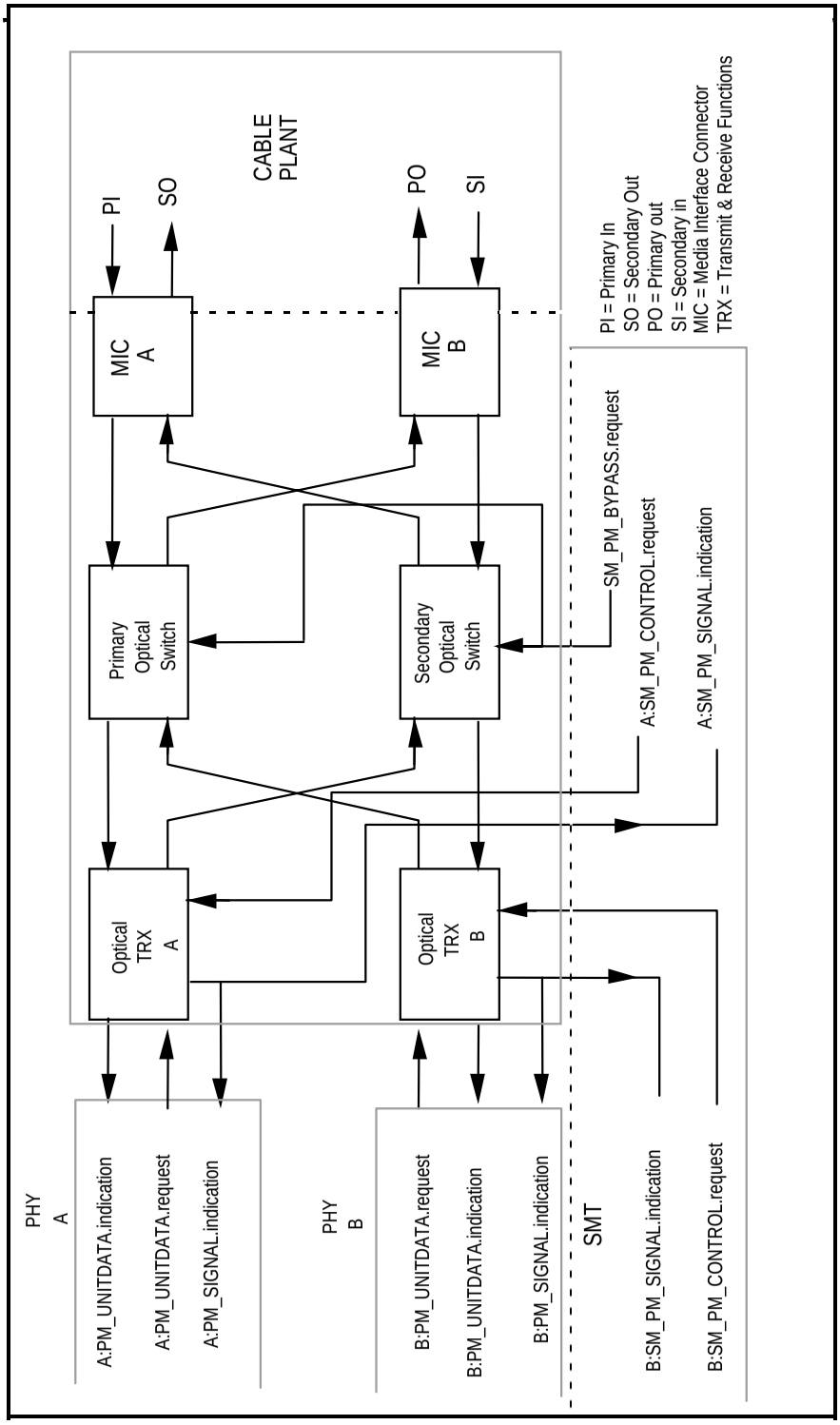

Figure 3 – Dual Attachment PMD Services

Copyright International Organization for Standardization
Reproduced by IHS under license with ISO
No reproduction or networking permitted without license from IHS
Not for Resale

5 Media Attachment

5.1 General

An FDDI station shall be attached to the fibre optic medium by a Media Interface Connector (MIC). The media connection between adjacent stations consists of a duplex fibre optic cable assembly attached to the respective Media Interface Connectors at the stations. To ensure interconnectability between conforming FDDI stations, the Media Interface Connector mating interface shall comply with IEC 61754-12 at the MIC receptacle. However, a specific fibre optical cable assembly is not defined.

The MIC receptacle for single-mode fibre is identical to the multimode MIC except for more precise tolerances and different keys that prevent interconnectability of single-mode fibre (SMF) and multi-mode fibre (MMF) MIC plugs and receptacles. The MIC receptacle is mandatory for SMF-PMD Physical Connections combining Category I Active Output Interfaces with Category I Active Input Interfaces. The MIC receptacle is optional for all other Active Interface combinations defined by SMF-PMD (see Clauses 6 and 8).

5.2 Media Interface Connector

The primary function of this connection is to mechanically align the optical transmission fibre with another optical transmission fibre or to an optical port on a component such as a receiver, a transmitter, or a bypass switch.

The MIC receptacle shall have latch points that mate with latches on the body of the MIC plug and ports that mate with the MIC plug ferrules and aligns them and the ends of the associated fibres they contain with the optical reference plane.

Figure 4 shows a possible implementation of the Media Interface Connector (MIC) plug, terminating a duplex fibre optic cable. The MIC plug shall have mechanical latches that mate with the latch points in the MIC receptacle. The MIC plug shall have two ferrules, one for each optical fibre in the optical transmission cable, which hold the fibres. These ferrules shall be mounted in the body of the MIC plug in such a way as to allow resilient movement during the mating process so as to align them to the ports in the MIC receptacle and position the optical fibre ends at the optical reference plane. Any MIC plug implementation is allowed, provided it is compatible with the SMF intermateability geometry requirements of IEC 61754-12. The MIC receptacle shall provide mechanical polarization to prevent improper attachment of input and output fibres.

The MIC receptacles of a station shall be keyed to prevent improper MIC plug attachment. Keying of the MIC plug itself is optional. However, keyed or not, the MIC plug shall be marked (labeled) to indicate proper attachment.

Four keys are defined for MIC receptacles as shown in Figure 5. MIC SA (Primary In/Secondary Out) and MIC SB (Secondary In/Primary Out) provide for attachment of dual attachment stations into an FDDI ring. MIC SM, used with the concentrator function, provides for the attachment of single attachment stations to a concentrator. MIC SS, used on a single attachment station, provides for its attachment to a concentrator. Requirements for the use of MIC SA, MIC SB, MIC SM, and MIC SS in FDDI networks are specified in the FDDI SMT standard.

Copyright International Organization for Standardization
Reproduced by IHS under license with ISO
No reproduction or networking permitted without license from IHS Not for Resale

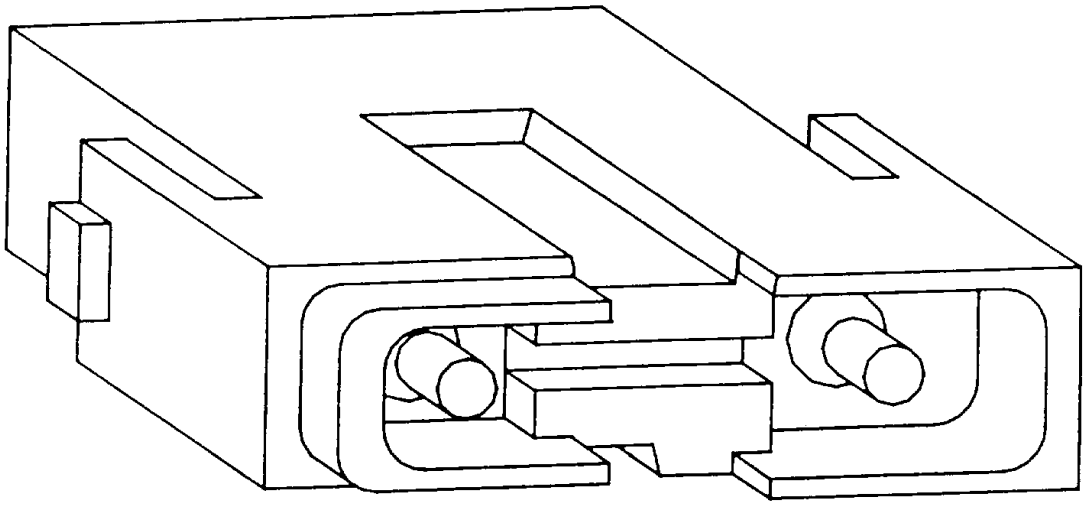

Figure 4 – Example of Media Interface Connector (MIC) Plug

While the MIC forward transmission loss is not directly specified, the return loss is specified (see 8.3.1).

Trade-offs between connector/fibre precision and source/detector performance (as well as other factors such as switch loss) are implementation issues. Imperfections in the MIC receptacle are included in the power and sensitivity requirements of the respective station attachment. Imperfections in the MIC plug are included in the cable plant loss (see Clause 8).

--`,,`,,`-`-`,,`,,`,`,,`---
Copyright International Organization for Standardization
Reproduced by IHS under license with ISO
No reproduction or networking permitted without license from IHS
Not for Resale

5.2.1 Keying Detail

Figure 5 shows the keying requirements for the MIC receptacle. When viewing the MIC receptacle with the keying on top, the left ferrule shall be the station optical output port. The right ferrule shall be the station optical input port.

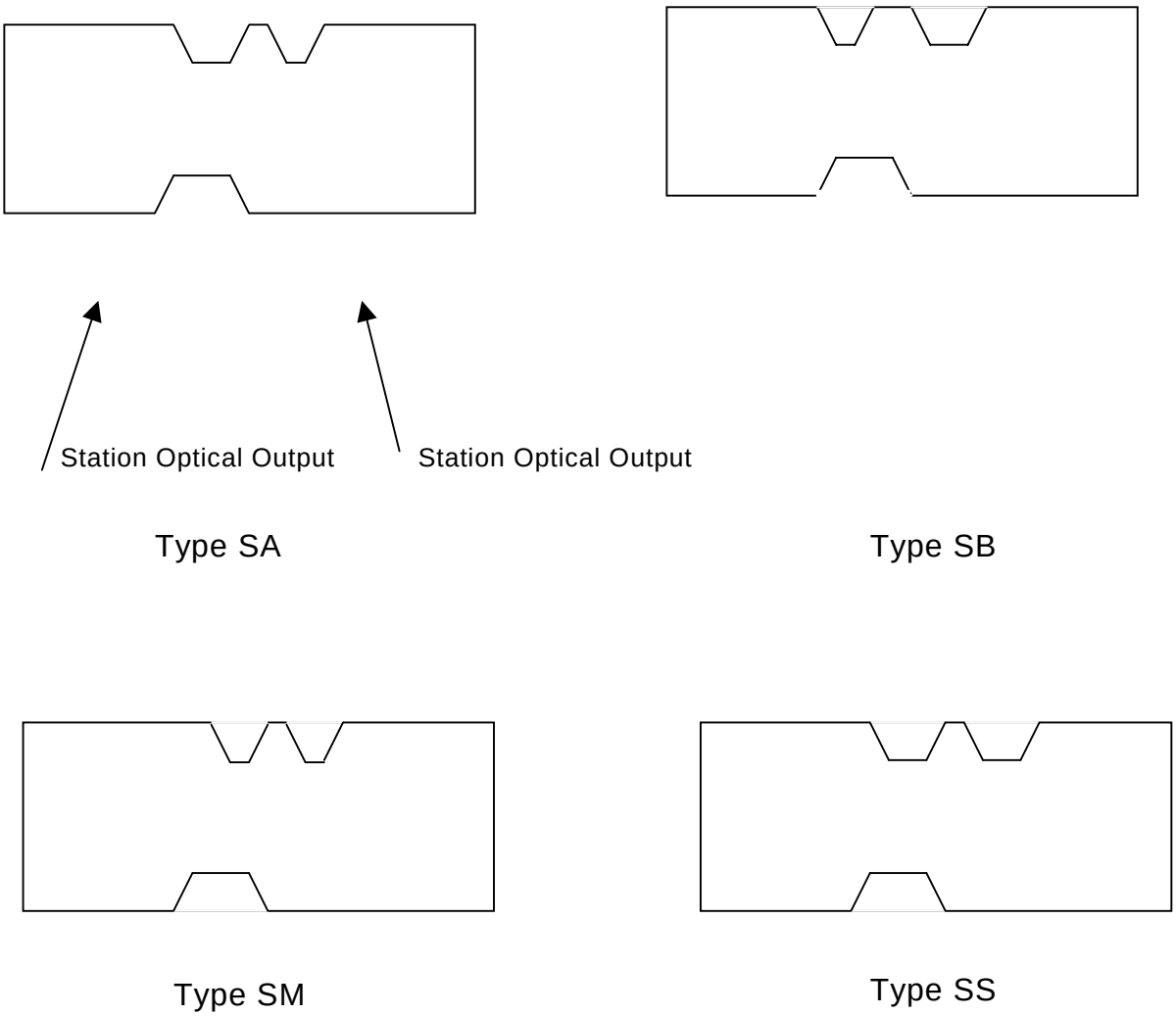

Not to scale with keying exagerated for illustration.

Figure 5 – SMF-MIC Keying Details (Wavelength Option 1)

Copyright International Organization for Standardization
Reproduced by IHS under license with ISO
No reproduction or networking permitted without license from IHS
Not for Resale

6 Media Signal Interface

6.1 General Description

Clause 6 defines the interfaces of the optical signal at the interconnect receptacles shown in Figure 3. Two categories of Active Output and Active Input Interfaces are defined. Each is distinguished by its average power requirements. All four possible combinations of Active Interfaces are allowed and provide for a range of cable plant loss budgets. Typically, an implementer would choose a category of Physical Connection that is appropriate for his cable plant loss characteristics and transmission distance requirements. See Clause 8 for a description of the allowed cable plant losses for the different combinations. (See Annex B for a guide to estimating cable plant length and loss.)

Each conforming single-mode fibre FDDI attachment shall be compatible with this optical interface to allow interoperability within an FDDI environment. The parameters specified in clause 6 are based on a requirement that the BER contributed by the repetition through an FDDI attachment shall not exceed a BER of $2{,}5 \times 10^{-10}$ under all conditions specified in clause 6, including the minimum Active Input Interface power level. In addition, the FDDI attachment shall not exceed a BER of 1×10^{-12} when the Active Input Interface power level is 2 dB or more above the minimum level.

The active input and output specifications contained in clause 6 are based on the use of SMF as defined in clause 8.

Copyright International Organization for Standardization
Reproduced by IHS under license with ISO
No reproduction or networking permitted without license from IHS Not for Resale

6.2 Active Output Interface

6.2.1 Characteristics

Category I and II Active Output Interfaces shall exhibit the characteristics in Table 1.

Table 1 – Characteristics of Category I and II Active Output Interfaces

	Category I		Category II		
	Min.	**Max.**	**Min.**	**Max.**	**Units**
Central Wavelength (Note 1)	1 270	1 340	1 290	1 330	nm
RMS Spectral Width (Note 1)	--	15,0	--	5,0	nm
Average Power (Note 2)	–20,0	–14,0	–4,0	0,0	dBm
Rise Time (10-90%)	--	3,5	--	2,0	ns
Fall Time (90-10%)	--	3,5	--	2,0	ns
Duty Cycle Distortion, peak-peak	--	1,0	--	1,0	ns
Data Dependent Jitter, peak-peak (Note 3)	--	0,6	--	0,6	ns
Random Jitter, peak-peak (Note 4)	--	0,76	--	0,76	ns
Extinction Ratio	--	10,0	--	10,0	%
Transmission Penalty (Note 5)	--	1,0	--	1,0	dB

1) Use IEC 60793-1-4 method IEC 793-1-C6 to measure Central Wavelength and r.m.s. Spectral Width.

2) The data pattern for this measurement shall be a stream of Halt symbols.

3) Data Dependent Jitter is specified for the test data pattern specified in Annex A. Annex A also provides possible test methods.

4) Random Jitter is specified as the peak-peak value where the probability of exceeding that value is equal to $2{,}5 \times 10^{-10}$. For a Gaussian probability distribution, the specified peak-peak value is equal to 12,6 times the r.m.s. value.

5) The penalty for all transmission related causes (e.g. optical reflections and mode partition noise) is measured with 20 dB ORL at the AOI with 20 kilometers of 3,5 ps/nm·km fibre for AOI Category I and 60 kilometers of 3,5 ps/nm·km fibre for AOI Category II. The penalty is measured relative to a physical connection operating at equivalent power levels and with =< 30 dB of ORL.

6.2.2 Pulse Envelope Test

The Pulse Envelope test requirements include limits of pulse width, rise and fall times, overshoot, ringing, and undershoot measured at a lower frequency than the operating frequency. The output optical pulse shape shall fit within the boundaries of the pulse envelope in Figure 6. During the first 5 nanoseconds following an optical level transition, ringing may be present which exceeds the limits of the pulse envelope as long as the ringing frequency exceeds 375 MHz and the 50% level of the ringing complies with Figure 6. After the 5 nanoseconds interval, the signal shall conform to the envelope without exception. (For test methods see annex A.)

For rise and fall time measurements, the maximum positive and minimum negative waveform excursions in the zero and 100% time intervals shall be centered around the 0,0 and 1,00 levels, respectively. A minimum bandwidth range of 100 kHz to 750 MHz is required for the measurement equipment used to evaluate the pulse envelope shown in Figure 6 for Category I Active Output Interfaces and Figure 7 for Category II Active Output Interfaces.

Copyright International Organization for Standardization
Reproduced by IHS under license with ISO
No reproduction or networking permitted without license from IHS Not for Resale

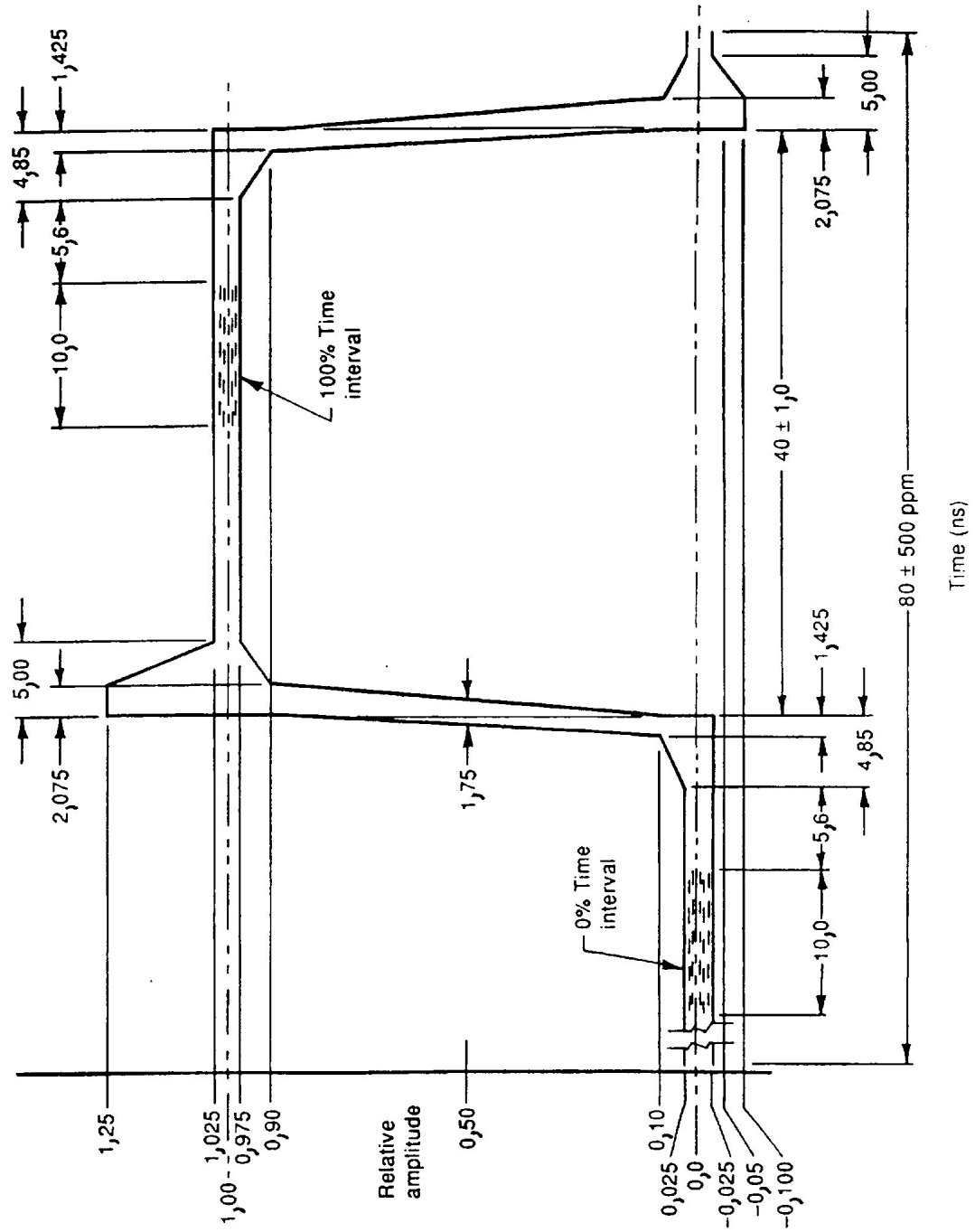

Figure 6 – Category I Pulse Envelope Test

Copyright International Organization for Standardization
Reproduced by IHS under license with ISO
No reproduction or networking permitted without license from IHS
Not for Resale

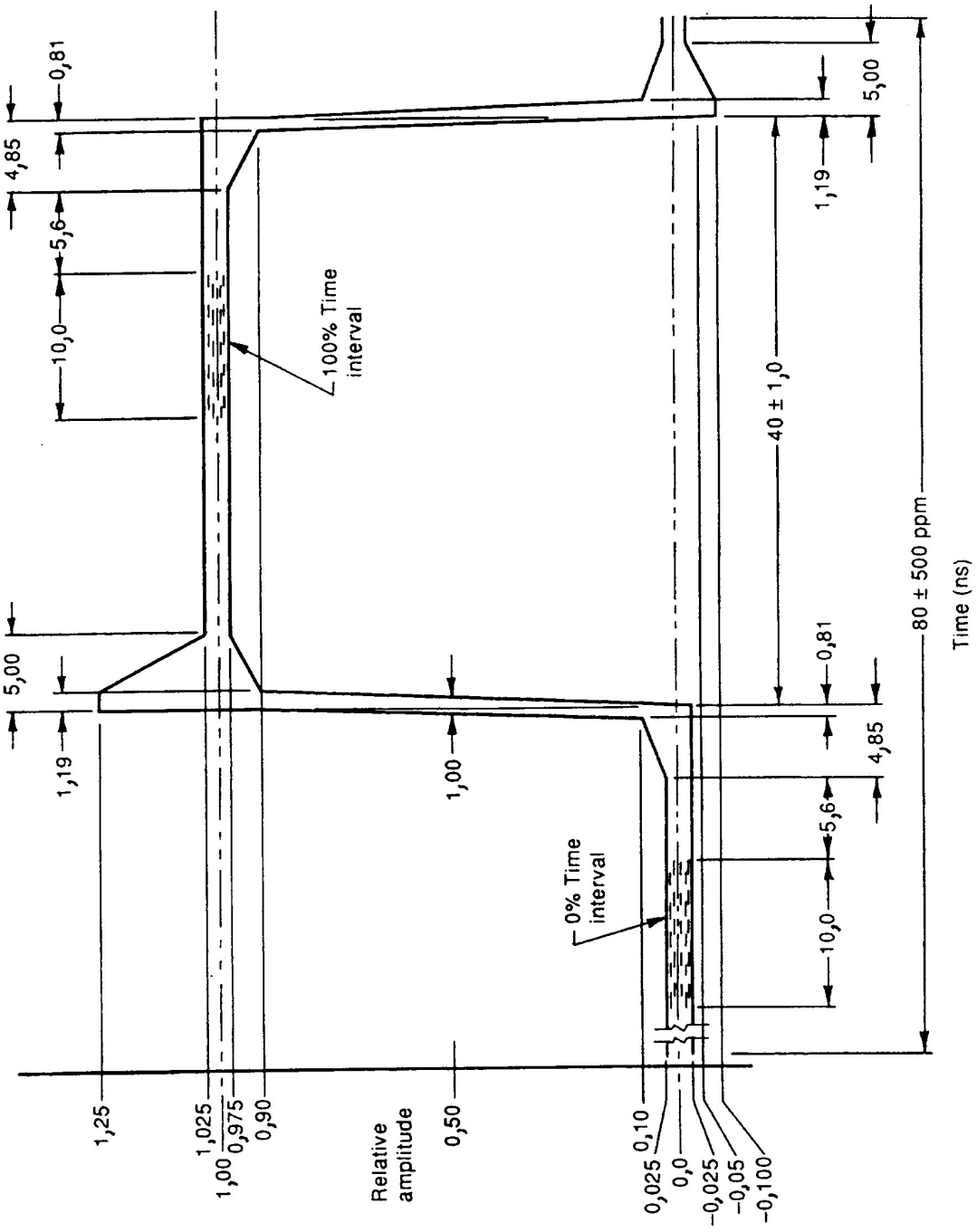

Figure 7 – Category II Pulse Envelope Test

Copyright International Organization for Standardization
Reproduced by IHS under license with ISO
No reproduction or networking permitted without license from IHS
Not for Resale

6.3 Active Input Interface

Category I and II Active Input Interfaces shall operate when provided with a signal with the characteristics in Table 2.

Table 2 – Characteristics of Category I and II Active Input Interface Signals

	Category I		Category II		
	Min.	**Max.**	**Min.**	**Max.**	**Units**
Central Wavelength (Note 1)	1 270	1 340	1 290	1 330	nm
Average Power (Note 2)	–31,0	–14,0	–37,0	–15,0	dBm
Rise Time (10-90%)	--	5,0	--	5,0	ns
Fall Time (90-10%)	--	5,0	--	5,0	ns
Duty Cycle Distortion, peak-peak	--	1,0	--	1,0	ns
Data Dependent Jitter, peak-peak (Note 3)	--	1,2	--	1,2	ns
Random Jitter, peak-peak (Note 4)	--	0,76	--	0,76	ns

1) Use IEC 60793-1-4 method IEC 793-1-C6 to measure Central Wavelength.

2) The data pattern for this measurement shall be a stream of Halt symbols.

3) Data Dependent Jitter is specified for the test data pattern specified in Annex A. Annex A also provides possible test methods.

4) Random Jitter is specified as the peak-peak value where the probability of exceeding that value is equal to $2{,}5 \times 10^{-10}$. For a Gaussian probability distribution, the specified peak-peak value is equal to 12,6 times the r.m.s. value.

6.4 Station Bypass Interface

6.4.1 Characteristics

The bypass function is optional for Category I stations. In the bypassed mode the in-bound medium is connected to the out-bound medium and the output of the optical transmitter is looped back to the input to the optical receiver. Optical bypass switches are not allowed to connect multimode PMD Physical Connections to SMF-PMD Physical Connections (see Figure 3). When the station's power is off, then the station shall be in the bypassed mode. The timing relationships for transitioning from bypassed to inserted, or from inserted to bypassed, shall be as shown in Figure 8. The characteristics in Table 3 below apply to Category I implementations only. Bypassing of Category II or mixed Category I and II implementations is considered to be outside the scope of this part of ISO/IEC 9314.

Table 3 – Characteristics of Category I Optical Bypass Implementations

	Test Per	**Min.**	**Max.**	**Units**
Attenuation (In-bound to Out-bound)	IEC 61300-3-4	0,0	2,5	dB
Interchannel Isolation	IEC 61300-3-9	40,0	---	dB
Switching Time (T_{SI})	----	---	25,0	ms
Media Interruption (T_{MI})	----		15,0	ms
Optical Return Loss (ORL)	IEC 61300-3-6 Method 1	20,0	---	dB

Copyright International Organization for Standardization
Reproduced by IHS under license with ISO
No reproduction or networking permitted without license from IHS Not for Resale

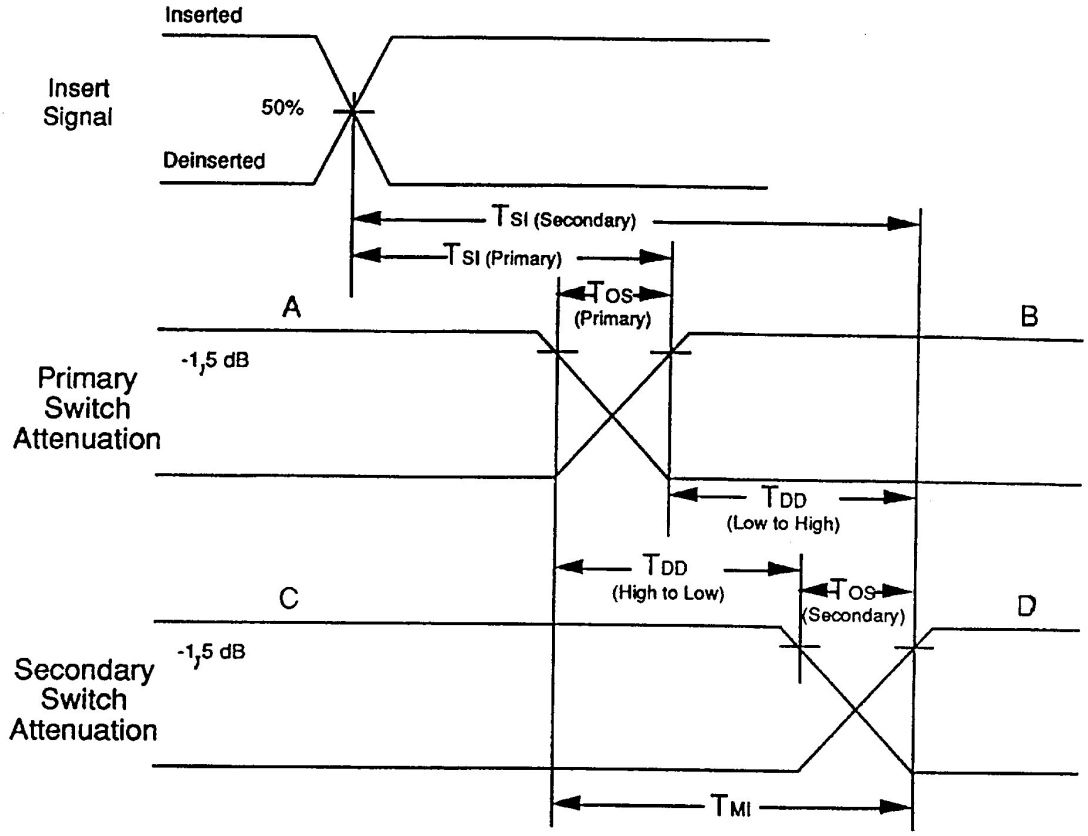

Where the light sources are as follows:

(Inserting / Deinserting)

A - Initial MIC PO light source = (MIC PI / Transmitter PO)
B - Initial MIC PO light source = (Transmitter PO / MIC PI)
C - Initial MIC SO light source = (MIC SI / Transmitter SO)
D - Initial MIC SO light source = (Transmitter SO / MIC SI)

Figure 8 – Station Bypass Timing Characteristics

Copyright International Organization for Standardization
Reproduced by IHS under license with ISO
No reproduction or networking permitted without license from IHS Not for Resale

6.4.2 Station Bypass Timing Definitions

T_{OS} Optical switching speed.
The amount of time it takes an output fibre to switch between two input fibres. The start of T_{OS} is defined as when the optical power first falls 1,5 dB below the power level from the initial source. T_{OS} ends when the optical power settles within –1,5 dB of the signal from the final source.

T_{DD} Difference delay time.
The absolute difference in delay switching times between the primary and secondary switches. The delay difference is measured at the –1,5 dB points from the final source level.

T_{MI} Media interruption time.
T_{MI} is equal to the sum of T_{OS} and T_{DD}. T_{MI} is the amount of time the optical primary or secondary signal is interrupted during the insertion or deinsertion of an optical switch. Only T_{MI} is limited which allows trade-offs between T_{OS} and T_{DD}. T_{MI} shall not exceed 15,0 ms.

T_{SI} Switching insertion/deinsertion time.
The time from when the optical switch is inserted or deinserted to when the optical signal rises to within –1,5 dB of its final value from a source. T_{SI} is the amount of time a station shall wait after going into the bypass mode before it may reconfigure. This parameter is measured from the 50% electrical level to the –1,5 dB optical level. T_{SI} shall not exceed 25,0 ms.

I_Max Maximum switching insertion/deinsertion time.
I_Max is the maximum value of T_{SI} that is allowed for the station. The default value of I_Max is 25,0 ms.

MI_Max Maximum media interruption time.
MI_Max is the maximum value of T_{MI} that is allowed for the station. The default value of MI_Max is 15,0 ms.

7 Interface Signals

7.1 General Description

Clause 7 defines the interface of the signals between SMF-PMD and SMT and also between SMF-PMD and PHY. Each conforming FDDI attachment shall be compatible with this interface to allow interoperability within an FDDI environment. Conforming implementations may employ any design technique which does not violate interoperability.

The optical power levels referenced in clause 7 relates to the Active Input Interface and the Active Output Interface. The $P_{AV\text{-}MIN}$ (Power Average Minimum) for Category I and Category II Active Input Interfaces are defined in Table 2.

7.2 Optical Receiver

The optical receiver transforms the incoming optical signal to an equivalent (electrical) signal that is presented to PHY. A Signal_Detect parameter shall be presented to PHY to indicate the presence or absence of an optical signal. The data outputs of the receiver are related to the Signal_Detect parameter and are described in 7.2.1 below.

Copyright International Organization for Standardization
Reproduced by IHS under license with ISO
No reproduction or networking permitted without license from IHS Not for Resale

7.2.1 Signal_Detect

Signal_Detect is intended as an indication that an optical signal of sufficient quality is being provided to PHY to correctly identify and decode Line-States. It is characterized by the threshold levels that it changes state on, by the hysteresis between these levels, and by the timing of the Signal_Detect output relative to the Receiver data outputs. It is not intended to require PMD to have the services required for monitoring BER. Category I and Category II Active Input Interfaces require different Signal_Detect threshold levels.

7.2.1.1 Signal_Detect Thresholds and Hysteresis

For Signal_Detect to be asserted, the BER of the Receiver outputs shall be less than 0,01. Signal_Detect shall be asserted for any power level of $P_{AV\text{-}MIN}$ or higher. The minimum allowed power level for deassertion shall be the power that gives a 0,01 BER on the receiver outputs or ($P_{AV\text{-}MIN}$ –14,0 dBm), whichever is the greater. The minimum allowed hysteresis between the assertion and deassertion levels shall be 1,5 dB. (Where $P_{AV\text{-}MIN}$ = –31,0 dBm for Category I Active Input Interfaces and –37,0 dBm for Category II Active Input Interfaces.) Figure 9 illustrates these requirements.

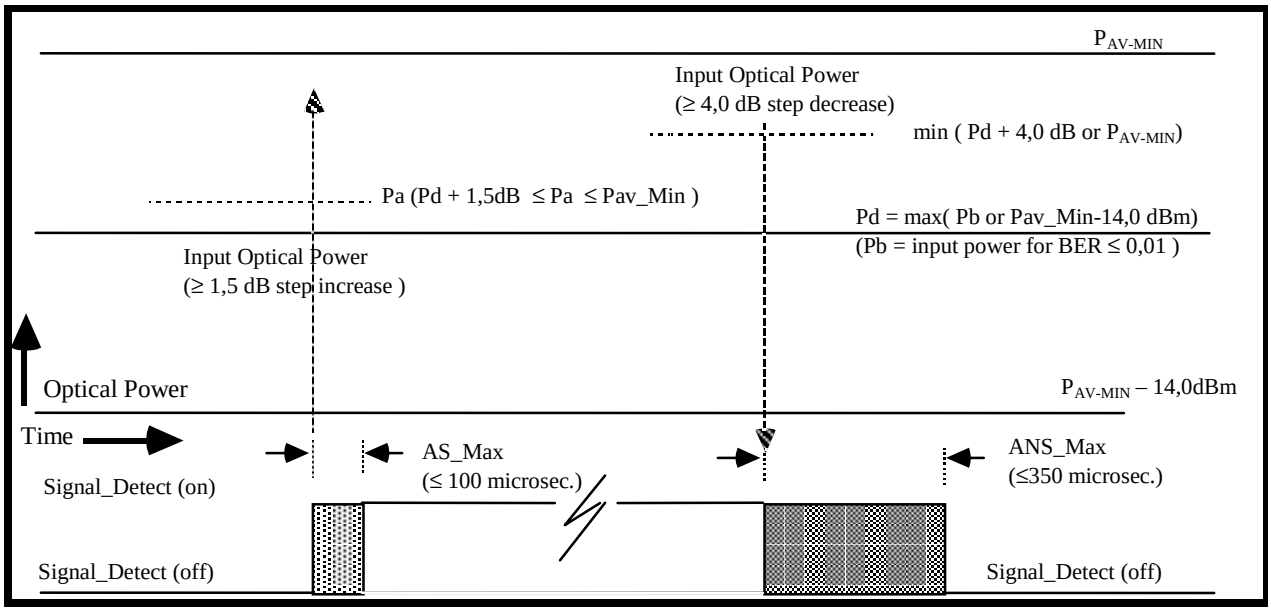

Figure 9 – Signal Detect Thresholds and Timing

7.2.1.2 Signal_Detect Timing Requirements on Assertion

The Signal_Detect output shall be asserted within 100 microseconds after reception of a stable optical input. Moreover, the Receiver data outputs shall reflect a BER of less than 0,01 measured in an LS_Max interval starting 100 microseconds after the reception of a stable optical input. (LS_Max = 15,0 microseconds is defined in the FDDI PHY standard.) The data pattern of the incoming optical signal stream may be any valid symbol stream.

NOTE The Optical Transmitter is not required to achieve stabilized operation until after a TE_Max interval (see 7.2). Accordingly, Signal_Detection = on does not guarantee that the Receiver BER =< 0,01 until after a TE_Max + AS_Max interval.

AS_Max — Maximum acquisition time (signal).
AS_Max is the maximum Signal_Detect assertion time for the station.AS_Max shall not exceed 100,0 µs. The default value of AS_Max is 100,0 µs.

ANS_Max — Maximum acquisition time (no signal).
ANS_Max is the maximum Signal_Detect deassertion time for a station. ANS_Max shall not exceed 350 µs. The default value of ANS_Max is 350,0 µs.

Copyright International Organization for Standardization
Reproduced by IHS under license with ISO
No reproduction or networking permitted without license from IHS Not for Resale

7.2.1.3 Signal_Detect Timing Requirements on Deassertion

The Signal_Detect output shall be deasserted within a maximum of 350,0 microseconds after a step decrease in the optical power from a power level which is the lower of the following two numbers:

$P_{AV\text{-}MIN}$ dBm, or

Pd + 4,0 dB, where, Pd = Power Level for deassertion

to a power level of ($P_{AV\text{-}MIN}$ –14,0) dBm or less. This step decrease in the power level shall have occurred in less than 8 nanoseconds. The Receiver output shall reflect, with a BER of 0,01 or less for a period of 12,0 microseconds or until Signal_Detect is deasserted, an input data stream consisting of Quiet symbols. Signal_Detect shall also be deasserted within a maximum of 350,0 microseconds after the BER of the Receiver outputs degrades below 0,01 for an optical input data stream that decays with a negative ramp function instead of a step function.

Table 4 – Summary of Clause 7

	Minimum	Maximum
Assert time	----	100,0 µs
Deassert time	----	350,0 µs
Assert Power (Pa)	Pd + 1,5 dB	PAV-MIN dBm
Deassert Power (Pd)	($P_{AV\text{-}MIN}$ –14,0 dBm) or Pb whichever power is the higher	----
Hysteresis	1,5 dB	----
NOTE Pb = Power into the active input which yields a BER of 0,01 or less.		

7.3 Optical Transmitter

PMD shall provide a service to SMT called SM_PM_CONTROL.request. When SMT passes a Control_Action parameter of Transmit_Disable, the optical output of the transmitter shall transition to the logic zero state independent of the PM_UNITDATA.request primitive and its output shall have an average optical power level of less than –45,0 dBm. When SMT passes a Control_Action parameter of Transmit_Enable, the transmitter optical output shall transmit the current PM_Request (NRZI code) value of the PM_UNITDATA.request primitive. The optical symbol stream shall consist of the PH_UNITDATA.request primitive, and shall have a start up envelope allowing a monotonically non-increasing BER in the TE_Max interval after receipt of the Transmit_Enable parameter. Stable operation shall be achieved after the TE_Max interval. The optical transmitter shall have an average power level that does not exceed –14,0 dBm or 0,0 dBm for Category I or Category II respectively during any interval after the receipt of the Transmit_Enable parameter. The Optical Transmitter shall respond to the Control_Action (Transmit_Enable) within TE_Max = 1,0 ms. The Optical Transmitter shall respond to Control_Action (Transmit_Disable) within TDS_Max = 1,0 µs.

TE_Max — Maximum transmit enable time.
The TE_Max shall not exceed 1,0 ms.

TDS_Max — Maximum transmit disable time.
The TDS_Max shall not exceed 1,0 µs.

--`,,`,,`-`-`,,`,,`,`,,`---

Copyright International Organization for Standardization
Reproduced by IHS under license with ISO
No reproduction or networking permitted without license from IHS Not for Resale

8 Cable Plant Interface Specification

8.1 Cable Plant Specification

Clause 8 defines the network requirements for an FDDI single-mode fibre optic cable plant. The term "cable plant" encompasses all the fibre optic components between any two communicating stations and the associated Media Interface Connector (MIC) plug at each end. The requirements specified herein apply to both dual and single attachments.

Conformance to this part of ISO/IEC 9314 shall be met by following procedures as specified. The test signal may be transmitted from either end of the cable plant.

Generic cabling systems as specified in ISO/IEC 11801 support FDDI networks if optional single mode optical fibres are installed. It is therefore recommended that newly installed cabling conform to ISO/IEC 11801 and that it includes single mode optical fibre.

The specifications in Clause 8 are intended to assure interoperability of FDDI conforming attachments with SMF optical cables[1)].

8.1.1 Cable Plant Attenuation

The four possible combinations of Active Interface categories shown in the table below with the corresponding minimum and maximum allowed cable plant attenuations.

Table 5 – Active Input/Output Interface Combinations

AOI	AII	Min.	Max.	Test Per
AOI_I	AII_I	0,0 dB	10,0 dB	Method IEC 793-1-C1A found in IEC 60793-1-4
AOI_I	AII_II	1,0 dB	16,0 dB	Method IEC 793-1-C1A found in IEC 60793-1-4
AOI_II	AII_I	14,0 dB	26,0 dB	Method IEC 793-1-C1A found in IEC 60793-1-4
AOI_II	AII_II	15,0 dB	32,0 dB	Method IEC 793-1-C1A found in IEC 60793-1-4

1) One (1) dB has been removed from the maximum power budgets to account for reflection and dispersion penalties.

2) The AOI_I maximum spectral width combined with the dispersion characteristics of the cable plant (see 8.1.2) may cause this pairing of Active Interfaces to be dispersion limited rather than loss limited. Under the worst case combination of source and cable attributes, the dispersion limit is expected to be near 35 kilometers.

Attenuation @ 1 300 nm.

This attenuation reflects the end-to-end insertion loss which includes cable attenuation (typically … 0,5 dB/km), macrobend losses, and the losses of other components such as splices, connectors and bypass switches when implemented.

If the intrinsic loss of the cable plant does not provide the minimum attenuation for the Physical Connection being used, an attenuator shall be inserted in the Cable Plant at the Active Input Interface end to reduce the power to the maximum power acceptable by the Active Input Interface.

1) See annex B for a guide to estimating maximum cable plant lengths.

Copyright International Organization for Standardization
Reproduced by IHS under license with ISO
No reproduction or networking permitted without license from IHS Not for Resale

8.1.2 Fibre, Optical

Table 6 – Fibre Optical Parameters

Parameter [2)]	Value	Test Per
Zero Dispersion Wavelength (λ_0)	1 300 nm to 1 322 nm	Method IEC 793-1-C5 found in IEC 60793-1-4
Zero Dispersion Slope (S_0)	≤ 0,095 ps/[nm^2-km]	Method IEC 793-1-C5 found in IEC 60793-1-4
Maximum Dispersion	3,5 ps/[nm-km] (1 285 to 1 330) nm	Method IEC 793-1-C5 found in IEC 60793-1-4
Mode Field Diameter	(8,7 µm to 10 µm) ± 0,5 µm	Methods IEC 793-1-C9A and C9B found in IEC 60793-1-4
Cable Cut-off Wavelength (λ_{cc})	≤ 1 270 nm	Method IEC 793-1-C7B found in IEC 60793-1-4

8.1.3 Fibre, Dimensions

Table 7 – Fibre Dimensions

Parameter [2)]	Value	Test Per
Cladding Diameter	125 µm ±2 µm	Method IEC 793-1-A2 found in IEC 60793-1-2
Cladding Non-circularity	±2 %	Method IEC 793-1-A2 found in IEC 60793-1-2
Core to Clad Concentricity Error	≤ 1,0 µm	Method IEC 793-1-A2 found in IEC 60793-1-2

8.1.4 Fixed Attenuation

The cable plant shall provide the capability of optical attenuation to be used to bring the total attenuation of any link within the dynamic range of the Physical Connection being used. The attenuation shall be inserted in the cable plant at the Active Input Interface end.

8.2 Bypassing

A property of the cable plant is the method of bypassing chosen in the application. The Cable Plant attenuation limits given above apply to the Cable Plant in the worst case bypassed configuration. This may mean that part of the Cable Plant loss is allocated to bypass switch loss contained in an FDDI node when several FDDI segments are concatenated.

8.3 Connectors and Splices

The MIC plug for connection to an FDDI node shall be compatible with the requirements specified in Clause 5, Media Attachment. Connectors and splices of any nature are allowed inside the cable plant. The number and quality of connections affect the loss of the cable plant and represent a design tradeoff outside the scope of this part of ISO/IEC 9314.

8.3.1 Optical Return Loss

The optical return loss of SMF-PMD optical connectors, splices, bypass switches and attenuators shall be 20 dB or greater when tested according to IEC 61300-3-6 Method 1.

---

2) The specifications for fibre referenced above are excerpted from early work related to IEC 60793-1-1 / IEC 60793-2. In the event that this standard differs from IEC 60793-1-1 / IEC 60793-2, the IEC standards shall prevail.

--`,,`,,`-`-`,,`,,`,`,,`---

Copyright International Organization for Standardization
Reproduced by IHS under license with ISO
No reproduction or networking permitted without license from IHS Not for Resale

Annex A
(informative)

Test Methods

A.1 General Description

This annex and the annexes which follow are not part of International Standard FDDI Single-mode Physical Layer Medium Dependent (SMF-PMD), ISO/IEC 9314-4, but are included for information purposes only.

This annex defines terms, measurement techniques, and conditions for testing jitter and rise/fall time. It deals with issues specific to FDDI and is not intended to supplant standard test procedures referenced in the specifications. It directly applies to verifying station performance related to the optical interface specifications.

These same procedures may be used to measure a single component of the system. Component performance is outside the scope of FDDI compliance but it is useful from a design viewpoint. Annexes B and C provide exemplary information on how to interpret component measurements.

A.2 Active Output Interface

A.2.1 Optical Power Measurement

Subclause 6.2, the Active Output Interface, specifies the average optical power launched into an SMF conforming to subclause 8.1. The output power shall be measured using a calibrated power meter and with the station transmitting a stream of Halt symbols. This pattern corresponds to using a 12,5 MHz square wave test signal. Care should be exercised to ensure that the optical power meter is properly calibrated over the optical spectrum of the source.

A.2.2 Optical Spectrum Measurement

The Central Wavelength and r.m.s. spectral width of the Active Output Interface are measured using an optical spectrum analyzer. The patch cable used to couple the light from the Active Output Interface to the spectrum analyzer should be short to minimize spectral filtering by the patch cable. The output signal during the measurement shall be a stream of Halt symbols. Additional information can be found in method IEC 793-1-C6 of IEC 60793-1-4.

A.2.3 Rise/Fall Response Time Measurement

Active Output Interface rise/fall response times shall be measured between the 10% and 90% optical power points using a wide bandwidth opto-electronic receiver and an oscilloscope. The output signal during the measurement shall be a stream of Halt symbols. The optical waveform shall fit within the boundaries of the template in Figure 6. It is important that the frequency response and gain flatness of the opto-electronic measurement system be wide and flat enough to yield accurate optical rise and fall times. A minimum frequency response bandwidth range of 100 kHz to 750 MHz should be used.

Copyright International Organization for Standardization
Reproduced by IHS under license with ISO
No reproduction or networking permitted without license from IHS Not for Resale

A.2.4 Jitter Measurements

The Active Output Interface jitter specifications apply in the context of a $2{,}5 \times 10^{-10}$ BER. Jitter may be measured with an oscilloscope or a Bit Error Rate Tester (BERT) as described in A.3 and A.4. The station should transmit the pattern given in A.5 when Data Dependent Jitter (DDJ) is measured. A stream of Idle symbols shall be transmitted when Random Jitter (RJ) and Duty Cycle Distortion (DCD) are measured.

With the exception of DCD, jitter is difficult to measure accurately on an oscilloscope. The oscilloscope procedure is illustrative, but often underestimates the actual amount of jitter. In case of doubt, the BERT test procedure should be used to verify the limits of the jitter.

A.2.5 Extinction Ratio

The Active Output Interface Extinction Ratio is a measure of the modulation depth of the optical waveform exiting the station. The output signal during the measurement shall be a stream of Halt symbols.

The measurement may be made with a DC-coupled wideband opto-electronic receiver that linearly converts optical power to voltage. The extinction ratio is the ratio of voltage corresponding to the 0% level (low light) to the voltage corresponding to the 100% (high light) level and shall be measured using a stream of Halt symbols. It is important that the receiver's frequency response, gain flatness and linearity over the range of optical power being measured be sufficient to provide accurate measurement of the 0% and 100% levels.

A.3 Active Input Interface

The rise/fall times, jitter, and average power ranges specified in 6.3 apply to the DDJ Test Pattern and define the optical test signal for the Active Input Interface. A compliant station should receive the test signal over the range of conditions specified with a frame error rate that corresponds to a BER less than or equal to $2{,}5 \times 10^{-10}$. The requirements in Clause 6 were written in terms of BER to facilitate the specification of components to be used in a particular implementation.

The source of the Active Input Interface test signal shall be any optical source conforming to the specifications in 5.2. It should transmit the DDJ test pattern given in A.5. The FDDI PHY document provides a description of both the coding scheme and the allowed test signal base frequency variations.

The rise/fall times and jitter of the test signal may be varied by having the source of the pattern transmit through longer than normal lengths of cable. If forced to chose between the proper DDJ or rise/fall times, then an adjustment should be made to achieve the proper DDJ. The DCD of the DDJ test pattern should be adjusted electrically at the test signal source because cable length and modal bandwidth variations do not increase DCD.

The average power of the DDJ test pattern may be adjusted with a variable optical attenuator. A high power source may be needed to verify the dynamic range of the Active Input Interface.

The rise/fall times and jitter of the DDJ test signal may be measured with the methods outlined in A.1, A.3 and A.4. Components used in a particular implementation may also be measured with these methods.

--`,,`,,`-`-`,,`,,`,`,,`---
Copyright International Organization for Standardization
Reproduced by IHS under license with ISO
No reproduction or networking permitted without license from IHS
Not for Resale

A.4 Distortion and Jitter Contributions

DCD and jitter are measured as the deviation from the ideal time position of the signal at the 50% point of the signal. The 50% point is identified as the zero crossing of the AC-coupled signal. The zero level is established in absence of the signal.

There are three types of jitter used in the PMD specifications. The definitions are given below and the test methods are given in A.4.

Duty Cycle Distortion (DCD)

DCD is often caused by propagation delay differences for low-to-high and high-to-low transitions. DCD is the deviation of the measured symbol duration from the nominal 8,0 ns width. It is measured on a continuous stream of Idle symbols (i.e., a 62,5 MHz square wave).

Data Dependent Jitter (DDJ)

DDJ is related to the transmitted symbol sequence. It is caused by the limited bandwidth characteristics of the optical channel components. DDJ results from non-ideal individual pulse responses and variation in the average value of the encoded pulse sequence that may cause base-line wander and might change the sampling threshold level in the receiver.

DDJ should be measured using the pattern described in A.5. DDJ is often seen in combination with other types of jitter. It is possible to measure the effects of DDJ without the effect of random jitter by working 4 dB to 6 dB above any random noise related limit, however, the associated probability of jitter should then be $1,0 \times 10^{-12}$.

Random Jitter (RJ)

RJ is primarily due to thermal noise contributed in the optical receiver. RJ is modeled as a Gaussian process. RJ should average to zero. It should be characterized by the peak value at a $2,5 \times 10^{-10}$ probability.

Random Jitter should be measured using a stream of Idle symbols. In this case DCD is easily separated out and the measured jitter should only consist of RJ.

A.5 Distortion and Jitter Measurement

A.5.1 DCD Measurement

The opto-electronic measurement system described in A.1.3 should be used to measure DCD using a stream of Idle symbols (i.e., a continuous 62,5 MHz square wave). The widths of the high and low state levels of the waveform should be measured at the 50% amplitude point.

DCD(ns) = 0,5((width of wider state) – (width of narrower state))

A.5.2 RJ and DDJ Measurement

There are two methods for measuring jitter: the oscilloscope method and the BER Test method. The BER Test method is more accurate than the oscilloscope method, but requires access to the clock signal used to create the data pattern. The BER Test method may be used to test an FDDI station's Active Output Interface and to measure the jitter of the signal used to test an Active Input Interface. The BER Test method may also be used to measure the jitter of components being used in a particular implementation of the Active Input and Output Interfaces.

Copyright International Organization for Standardization
Reproduced by IHS under license with ISO
No reproduction or networking permitted without license from IHS Not for Resale

A.5.2.1 Oscilloscope Method

An eye pattern wave form is displayed on the screen of an oscilloscope. Jitter is measured as the width of the zero crossings of the eye pattern. Since jitter is measured at an associated probability, and since oscilloscopes usually do not display events having a low probability of occurrence, the oscilloscope method may not accurately measure peak to peak jitter at a probability of $2{,}5 \times 10^{-10}$ or less.

A.5.2.2 BER Test Method

The BER jitter measurement method compares an unjittered waveform with a jittered waveform on a bit by bit basis and calculates the BER. The decision point for the comparison (the clock) is varied over the interval

$$T_o - \frac{T_b}{2} < T_d < T_o + \frac{T_b}{2}$$

Where

T_o is the optimal decision point (center of eye diagram)

T_b is the bit period = 8,0 ns

T_d is the decision point

For each position of T_d, a BER measurement is taken giving the probability of jitter occurring at that T_d position. In effect, the test moves along the zero crossing line of the eye pattern, measuring the probability of the occurrence of jitter at each point in the eye. The range of T_d values that result in a BER less than or equal to $2{,}5 \times 10^{-10}$ gives the window (W_jf) in the eye that does not have jitter of this probability. The peak to peak jitter in the waveform is therefore:

$$\text{Jitter} = T_b - W_jf$$

In practice, a BER test set is used to make the bit by bit comparison, to increment the error count and to calculate the measured BER. The clock, or decision point, is moved across the eye pattern. When testing for compliance to the Active Output Interface specifications, the clock may be extracted from the optical signal exiting the station. It is important that the jitter of the test receiver used to measure the Active Output jitter be low enough to measure the jitter contributed by the station. Component test beds and Active Input Interface test signal generators provide direct access to a suitable clock source to use in the BER Test method.

The BER Test method may be used to measure both Random and Data Dependent Jitter. DCD is usually subtracted from a measurement because it is easy to measure separately. A stream of Idle symbols is used to measure RJ. The DDJ test pattern is used for DDJ measurements. DDJ and RJ may be separated as described in A.3.

A common practice used to save time is to measure the jitter at higher probabilities (e.g., $1{,}0 \times 10^{-8}$ probability) and then extrapolate to the jitter width at a $2{,}5 \times 10^{-10}$ probability.

A.6 DDJ Test Pattern For Jitter Measurements

The symbol pattern provided below is used for testing FDDI components or physical links for DDJ. The symbols used in this pattern are defined in the FDDI PHY document. The data pattern meets the coding requirements of FDDI and represents a case that may be encountered during normal data transmission.

Copyright International Organization for Standardization
Reproduced by IHS under license with ISO
No reproduction or networking permitted without license from IHS Not for Resale

The pattern is 256 symbols long (1 280 bits) and is transmitted continuously during the test by repeating it. When 4B/5B NRZI encoded, this sequence causes a near worst case condition for inter-symbol interference and duty cycle base-line wander of 50 kHz.

When the pattern is used to test the jitter introduced by a particular component, it may be used directly as shown below:

```
I,I,I,J,K,4,D,3,1,8,B,F,8,E,3,9
5,E,6,9,C,A,0,2,4,2,4,7,0,3,B,F
1,8,1,9,3,E,5,9,6,E,C,A,D,7,0,D
7,0,7,0,7,0,2,4,2,4,2,2,4,2,7,0


4,7,0,2,7,4,D,3,1,8,B,F,8,E,3,9
5,E,6,9,C,A,0,2,4,2,4,7,0,3,B,F
1,8,1,9,5,E,5,9,6,E,C,E,D,7,0,D
4,D,2,2,7,4,D,3,1,8,B,F,8,E,3,9


5,E,6,9,C,A,T,R,S,R,S,T,0,3,B,F
1,8,1,9,6,E,5,9,6,E,C,E,3,9,5,1
I,J,K,2,7,4,D,3,1,8,B,F,8,E,3,9
5,E,6,9,C,A,0,2,4,2,4,7,0,3,B,F


1,8,1,9,3,E,5,9,6,E,C,A,D,7,0,D
D,0,7,D,2,7,4,D,3,1,8,B,F,8,E,3
9,5,E,6,9,C,A,0,2,4,2,4,2,4,2,7
0,3,B,F,1,8,F,9,C,E,3,A,C,E,I,I
```

When the pattern is used to test Active Input and Output Interface specifications it is suggested that an implementer replace:

```
line 1 with a copy of line 3
line 9 with a copy of line 6
line 11 with a copy of line 13
line 16 with a copy of line 8
```

Multiple copies of the resulting pattern constituting a maximum length information field of a frame may then be incased in appropriate MAC headers and trailers for transmission by a station as a test frame.

The implementer is reminded that the Active Input Interface requirements apply to any valid signal sequence, and that Active Input Interface performance is dependent on the receivers symbol sequence. The FDDI coding format may result in symbol sequences that have a constant 40 % or 60 % duty cycle. Repetitive transmissions of maximum length frames of a single symbol may result in baseline wander frequency as low as 1,38 kHz. An implementer may wish to verify active interface conformance using a maximum length frame of repeating '7' symbols.

--`,,`-`-`,,`,,`,`,,`---
Copyright International Organization for Standardization
Reproduced by IHS under license with ISO
No reproduction or networking permitted without license from IHS Not for Resale

Annex B
(informative)

Cable Plant Usage

B.1 Cable Plant Length

Clause 8, Cable Plant Interface Specification, defines the cable plant optical attenuation ranges for four combinations of single-mode Active Output and Active Input Interface Physical Connections. These Combinations provide maximum optical power budgets at 1 300 nm from 10 dB to 32 dB. For planning purposes, the combination of a Category II Active Output Interface and a Category II Active Input Interface will support optical cable lengths up to 58 kilometers based on the assumptions noted in table B.1. Other combinations will support lesser distances.

As examples of cable length estimates, referring to table B.1, consider Combination (1), a single-mode Physical Connection between two active stations utilizing Category I Active Output Interfaces and Category I Active Input Interfaces (10 dB power budget) and Combination (2), a single-mode Physical Connection between Category II Active Output Interfaces and Category II Active Input Interfaces (32 dB power budget – see table B.1). The MIC at each end of the link is accounted for in the interface power specifications of 5.2 and 5.3, and is not included in the cable plant. One (1) dB has been removed from the specifications to account for reflections and power penalties. No bypass switches are included in these examples.

Using a statistical approach, the system loss budget constraint requires that the mean gain (μ_G) of the station exceed the mean loss (μ_L) of the cable plant by at least two standard deviations

where:

$$\mu_G - \mu_L > 2^{TM}_{G-L} \quad (1)$$

$$^{TM}_{G-L} = \left[^{TM}_{G}{}^{2} + {}^{TM}_{L}{}^{2}\right]^{1/2}$$

For this example,

$$\mu_G = P_T - P_R \quad (2)$$

$$^{TM}_{2,G} = {}^{TM}_{2,T} + {}^{TM}_{2,R} \quad (3)$$

$$\mu_L = l_t \mu_c + N_s \mu_s + N_{con} \mu_{con} \quad (4)$$

$$^{TM}_{2,L} = l_R l_t {}^{TM}_{2,c} + N_s {}^{TM}_{2,s} + N_{con} {}^{TM}_{2,con} \quad (5)$$

where l_t is the total sheath length of the cable plant and l_R is the average reel length.

Copyright International Organization for Standardization
Reproduced by IHS under license with ISO
No reproduction or networking permitted without license from IHS Not for Resale

The following statistics are assumed:

Table B.1 – Parameters for Cable Length Estimates at 1 300 nm

	Combination (1)	Combination (2)
Transmitter	P_T = –20 dBm	–4 dBm
	$™_T$ = 0 dB	0 dB
Receiver	P_R = –31 dBm	–37 dBm
	$™_R$ = 0 dB	0 dB
Budget	μ_G = 11 – 1 = 10 dB	33 – 1 = 32 dB
	$™_G$ = 0 dB	0 dB
Cable	μ_c = 0,40 dB/km	0,40 dB/km
	$™_c$ = 0,07 dB/km	0,07 dB/km
Splice	μ_s = 0,15 dB/splice	0,15 dB/splice
	$™_s$ = 0,15 dB/splice	0,15 dB/splice
	N_s = number of splices	
Connector	μ_{con} = 0,4 dB/connector	0,4 dB/connector
	$™_{con}$ = 0,2 dB/connector	0,2 dB/connector
	N_{con} = number of connectors	

A cable splice point is located after each reel length (l_R) and at each end of the link. Field experience shows that a reasonable value for l_R is 2 kilometers. The number of splices in the link is given by:

$$N_S = 1 + \left[\frac{l_t}{1_R}\right] = 1 + \frac{1_t}{2} \qquad (6)$$

where N_S is an integer rounded upward.

The number of connectors is assumed to be four, which accounts for one jumper for interconnection flexibility at each end of the link. Substituting the values from table B.1 and equation (6) into equations (4) and (5) gives:

$$\mu_L = 0{,}40\ l_t + \left[1 + \frac{1_t}{2}\right] 0{,}15 + 4\ (0{,}4)$$

$$= 0{,}475\ l_t + 1{,}75$$

and

$$s_{2,L} = 2\ l_t\ [0.07]^2 + \left[1 + \frac{1_t}{2}\right]\ (0{,}15)^2 + 4\ (0{,}2)^2$$

$$= 0{,}0211\ l_t + 0{,}1825$$

The maximum length l_t estimated by iteratively solving equation (1) is 14,4 kilometers for the Combination (1) physical connection and 58,6 kilometers for the Combination (2) physical connection.

Copyright International Organization for Standardization
Reproduced by IHS under license with ISO
No reproduction or networking permitted without license from IHS Not for Resale

FDDI networks may also be implemented via generic cabling systems as specified in ISO/IEC 11801, which supports, amongst others, the use of single-mode optical fibres. The requirements of ISO/IEC 11801 should be met, if an FDDI network is implemented via a generic cabling system.

Copyright International Organization for Standardization
Reproduced by IHS under license with ISO
No reproduction or networking permitted without license from IHS Not for Resale

Annex C
(informative)

Electrical Interface Specifications

C.1 Electrical Interface Specifications

C.1.1 General

This annex defines the electrical interface of the optical transmitters and receivers as shown in figures C.1 and C.2. This interface is intended to separate the development of components for PHY and PMD and thus it provides an interface that may be used for the verification of the conformance of FDDI MAC and PHY entities. It is not intended to provide an interface for the interconnection of conforming FDDI attachments.

For interconnection of conforming FDDI attachments, the true specification for interoperability is at the optical fibre interface provided by each attachment. Therefore, the specifications in this annex need not be met if the optical interface supplied meets the applicable requirements as specified in Clause 6 of this document.

C.1.2 Interface Signals

RX+ and RX– form a differential input. They connect the Fibre Optic Receiver output to the Decode function input. The data is transferred as an NRZI pulse stream.

TX+ and TX– form a differential output. They connect the Encode function output to the Fibre Optic Transmitter input. The data is transferred as an NRZI pulse stream.

Differential input/output signals are shown DC-coupled in figure C.1. This DC-coupling was assumed in the jitter allocation shown in Annex D.

The differential input/output signals are shown AC coupled in figure C.2, as this may be useful to allow for power supply mismatches between components. An implementation using the AC-coupled scheme may need to provide for jitter induced due to base line wander across the capacitors.

The differential interface signals between PHY and PMD should be compatible with both the 10K and the 100K ECL logic families.

Copyright International Organization for Standardization
Reproduced by IHS under license with ISO
No reproduction or networking permitted without license from IHS Not for Resale

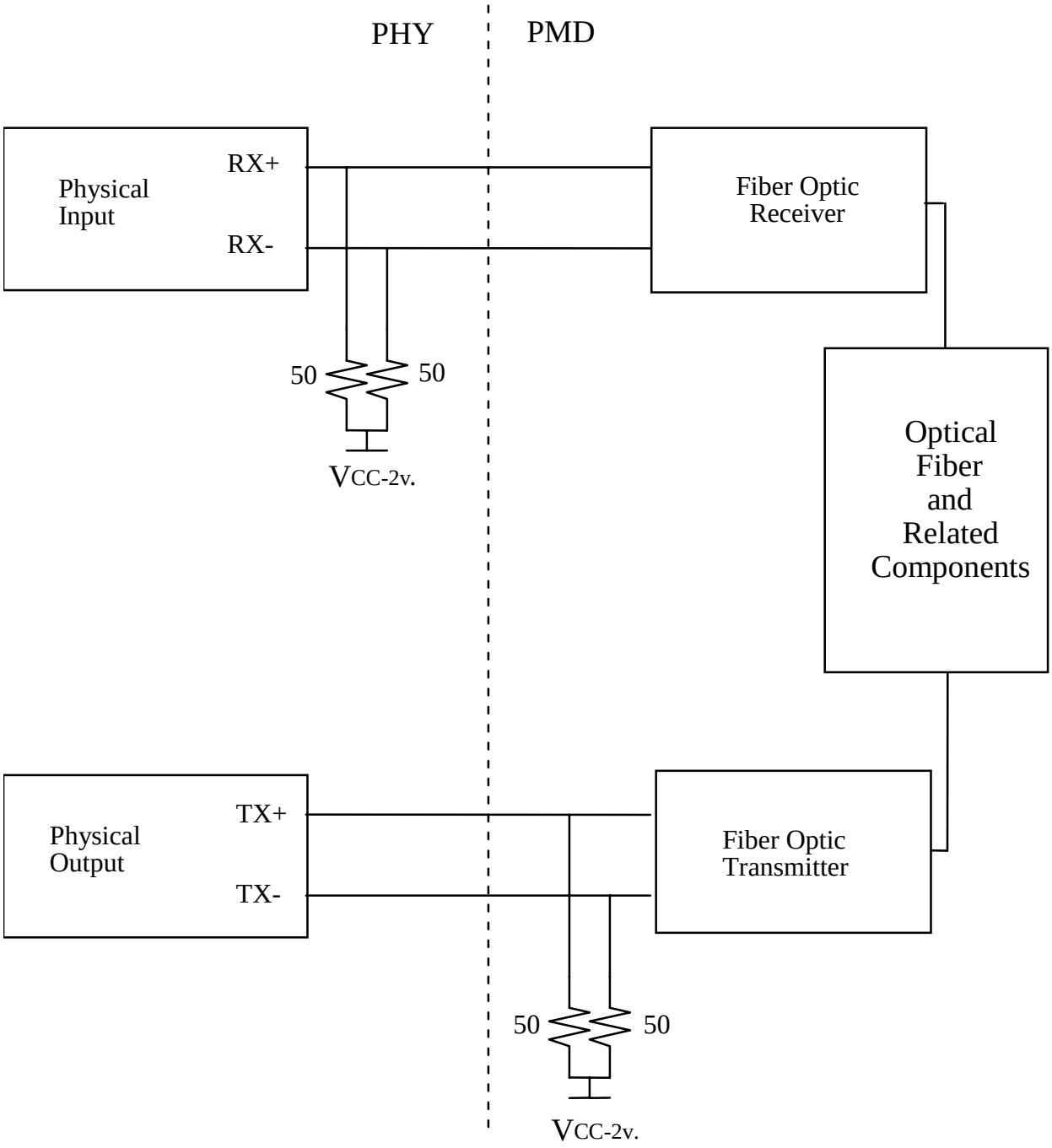

Vcc is the power positive voltage for PHY and PMD

Figure C.1 – Test Configuration for "DC" Coupled Components

Copyright International Organization for Standardization
Reproduced by IHS under license with ISO
No reproduction or networking permitted without license from IHS
Not for Resale

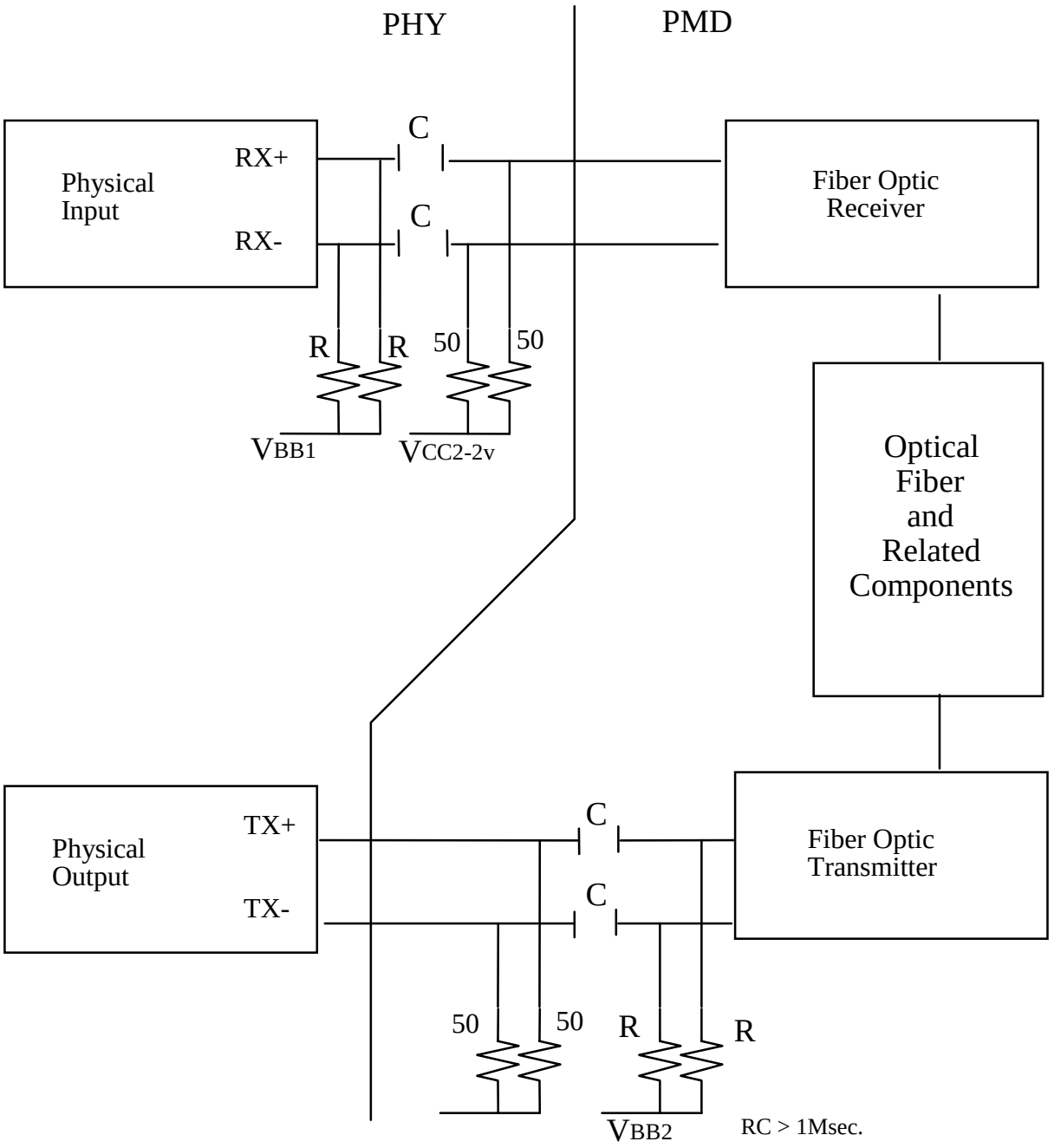

$V_{CC1\text{-}2v}$.

V_{CC1}, V_{BB1} are the power positive and bias levels of PHY and V_{CC2} and V_{BB2} are the corresponding levels for PMD, respectively.

Figure C.2 – Test Configuration for "AC" Coupled Components

Copyright International Organization for Standardization
Reproduced by IHS under license with ISO
No reproduction or networking permitted without license from IHS
Not for Resale

Annex D
(informative)

System Jitter Allocations

D.1 System Jitter Allocations

This annex contains an example of a jitter budget for an FDDI Physical Link.

D.1.1 Jitter Sources

Jitter in the fibre optic components consists of Duty Cycle Distortion (DCD), Data Dependent Jitter (DDJ), and Random Jitter (RJ). Jitter in the recovered clock consists of Static Alignment Error (SAE), DDJ, and RJ components. SAE is an offset of the decision time slot (clock) from the optimal sampling position. When the clock coincides with the optimal sampling position, the minimum BER is achieved. The major causes of SAE are an initial misalignment error and differential delays between data and clock paths induced by temperature fluctuations and aging. See Annex A for additional information on jitter measurements and definitions.

The jitter values are expressed as peak-peak values. For RJ both peak-peak values and r.m.s. values are given. The peak-peak values are defined as that value for which the probability that it will be exceeded is equal to $2{,}5 \times 10^{-10}$. For a Gaussian probability of random jitter, the different components in the link are assumed to be uncorrelated and are assumed to add as the square root of the sum of their squares.

The jitter budget is provided to document the thinking underlying the PMD specifications and to serve as guidance for the development of PMD and PHY components. Conforming FDDI stations are required to comply only with the requirements expressed in the main body of this part of ISO/IEC 9314. For the interconnection of conforming FDDI attachments, the true requirement for interoperability is at the optical interface provided by each attachment. These requirements are given in Clauses 6 and 7.

Table D.1 – Example of System Jitter Budget for FDDI

ITEM	DCD (ns) peak-peak	DDJ (ns) peak-peak	RJ (ns) peak-peak (r.m.s.)*
PH_UNITDATA.request	0,4	0,0	0,32
(PHY Out)			(0,025)
Active Output Interface	1,0	0,6	0,76
(PMD Out)			(0,06)
Active Input Interface	1,0	1,2	0,76
(PMD In)			(0,06)
PM_UNITDATA.indication	1,4	2,2	2,27
(PHY In)			(0,18)
* Peak-peak RJ components are evaluated at a probability of $2{,}5 \times 10^{-10}$. For a Gaussian distribution, the peak-peak jitter is then 12,6 times the r.m.s. jitter.			

--`,,`,,`-`-`,,`,,`,`,,`---

Copyright International Organization for Standardization
Reproduced by IHS under license with ISO
No reproduction or networking permitted without license from IHS Not for Resale

Clock Recovery Jitter:**

SAE and Clock DDJ (C_DDJ)	1,5 ns peak-peak
Clock RJ (C_RJ)	1,8 ns peak-peak (0,143 ns rms)

** SAE, C_DDJ and C_RJ are implementation dependent.

D.1.2 Jitter Calculation Example

The accumulation of peak-peak jitter should not exceed the code bit period of 8 ns. Using the jitter data from the above table the following example calculation is given:

Total Jitter = (PHY In) DCD + (PHY In) DDJ + SAE + C_DDJ +(((PHY In) RJ)**2

+ (C_RJ)**2)**1/2

= 1,4 + 2,2 + 1,5 + ((2,27**2) + (1,8**2))**1/2 = 8,0 ns

Copyright International Organization for Standardization
Reproduced by IHS under license with ISO
No reproduction or networking permitted without license from IHS Not for Resale

Annex E
(informative)

Keying Considerations

E.1 Keying Considerations

Clause 5 specifies the keying required on all receptacles within FDDI cabinets for FDDI conformance to the physical connection that uses Category I Active Interfaces. Four different keys, denoted SA, SB, SM and SS, are specified. This annex suggests how these keys may be used in FDDI cabling systems.

E.1.1 Receptacle Keying

The receptacle keys as viewed from the front of the receptacle with the cavity for the plug below the key as shown in simplified form are:

SA Denotes main ring trunk connection (Primary In/Secondary out)

SB Denotes main ring trunk connection (Secondary In/Primary Out)

SM Denotes master connection of a concentrator

SS Denotes single attachment station connection

E.1.2 Plug Keying

The potentially useful keys for plugs on FDDI cables as viewed from the rear of the plug with the body of the plug below the key as shown in simplified form are:

SA Inserts into SA-keyed receptacles only

SB Inserts into SB-keyed receptacles only

SM Inserts into SM-keyed receptacles only

SS Inserts into SA, SB, SM, of SS-keyed receptacles

E.1.3 Cabling Systems

There are three system cabling defects that may cause serious and potentially hard to detect operational difficulties or hard to diagnose operational difficulties, or both, which may be prevented to varying degrees through the use of cable keying techniques. These are:

1) The reversal of a dual attachment station within the ring trunk such that what was intended to be the SA connection is now the SB connection and vice versa. This causes the MACs in the station to be inserted in the opposite ring than was intended.
2) The connection of a single attachment station directly into the ring trunk by connecting it to either an SA, or SB-keyed receptacle. This causes a break in the ring trunk.
3) The connection of the back side (SM-keyed receptacle) of a concentrator directly into the ring trunk by connecting it to either an SA, or SB-keyed receptacle. This causes a break in the ring trunk.

Copyright International Organization for Standardization
Reproduced by IHS under license with ISO
No reproduction or networking permitted without license from IHS Not for Resale

Using plugs with keying as listed in E.2 above on cables enables two cabling systems for SMF-PMD FDDI use.

The first cabling system uses a cable with an SM-keyed plug on one end and an SS-keyed plug on the other (SM-to-SS) for connecting a single attachment station (SS-keyed receptacle) to the master port (SM-keyed receptacle) of a concentrator. The SM-to-SS cable is also used to connect a concentrator master port (SM-keyed receptacle) to a dual attachment station (SA, or SB-keyed receptacle) for use as a single attachment station. This system uses a cable with an SA-keyed plug on one end and a SB-keyed plug on the other (SA-to-SB) for connecting dual connection stations into the ring trunk. Referring to the cabling defects described above, this cabling system prevents miscabling errors (1) and (2) and discourages miscabling error (3) because the SM-to-SS cable, which is presumably coded differently from the SA-to-SB cable used in the ring trunk, is the only one that may be used when a dual attachment station is to be connected for use as a single attachment station. This cabling system also has the advantage that looking at the loose end of a cable tells the observer what type of connection is expected to be at the other end of the cable.

The second cabling system uses SS-keyed plugs on both ends of all cables. All cables are SS-to-SS and are usable for all connections. This system prevents none of these miscablings from occurring in the installation or modification of an FDDI system. Its advantage is that one cable satisfies all needs.

The use of the specified receptacle keying for all FDDI attachment devices allows the interchangeable use of any of these cabling systems for all FDDI systems at the discretion of the user or the supplier, or both.

———————

Copyright International Organization for Standardization
Reproduced by IHS under license with ISO
No reproduction or networking permitted without license from IHS Not for Resale

Standards Survey

The IEC would like to offer you the best quality standards possible. To make sure that we continue to meet your needs, your feedback is essential. Would you please take a minute to answer the questions overleaf and fax them to us at +41 22 919 03 00 or mail them to the address below. Thank you!

Customer Service Centre (CSC)

International Electrotechnical Commission
3, rue de Varembé
1211 Genève 20
Switzerland

or

Fax to: **IEC**/CSC at +41 22 919 03 00

Thank you for your contribution to the standards-making process.

Nicht frankieren
Ne pas affranchir

Non affrancare
No stamp required

A Prioritaire

RÉPONSE PAYÉE

SUISSE

Customer Service Centre (CSC)
International Electrotechnical Commission
3, rue de Varembé
1211 GENEVA 20
Switzerland

Copyright International Organization for Standardization
Reproduced by IHS under license with ISO
No reproduction or networking permitted without license from IHS
Not for Resale

Q1 Please report on **ONE STANDARD** and **ONE STANDARD ONLY**. Enter the exact number of the standard: *(e.g. 60601-1-1)*

.....

Q2 Please tell us in what capacity(ies) you bought the standard *(tick all that apply).* I am the/a:

purchasing agent ❑
librarian ❑
researcher ❑
design engineer ❑
safety engineer ❑
testing engineer ❑
marketing specialist ❑
other.....

Q3 I work for/in/as a: *(tick all that apply)*

manufacturing ❑
consultant ❑
government ❑
test/certification facility ❑
public utility ❑
education ❑
military ❑
other.....

Q4 This standard will be used for: *(tick all that apply)*

general reference ❑
product research ❑
product design/development ❑
specifications ❑
tenders ❑
quality assessment ❑
certification ❑
technical documentation ❑
thesis ❑
manufacturing ❑
other.....

Q5 This standard meets my needs: *(tick one)*

not at all ❑
nearly ❑
fairly well ❑
exactly ❑

Q6 If you ticked NOT AT ALL in Question 5 the reason is: *(tick all that apply)*

standard is out of date ❑
standard is incomplete ❑
standard is too academic ❑
standard is too superficial ❑
title is misleading ❑
I made the wrong choice ❑
other .....

Q7 Please assess the standard in the following categories, using the numbers:
(1) unacceptable,
(2) below average,
(3) average,
(4) above average,
(5) exceptional,
(6) not applicable

timeliness.....
quality of writing.....
technical contents.....
logic of arrangement of contents .....
tables, charts, graphs, figures.....
other .....

Q8 I read/use the: *(tick one)*

French text only ❑
English text only ❑
both English and French texts ❑

Q9 Please share any comment on any aspect of the IEC that you would like us to know:

.....
.....
.....
.....
.....
.....
.....
.....
.....
.....
.....
.....

Copyright International Organization for Standardization
Reproduced by IHS under license with ISO
No reproduction or networking permitted without license from IHS
Not for Resale

Copyright International Organization for Standardization
Reproduced by IHS under license with ISO
No reproduction or networking permitted without license from IHS
Not for Resale

ISBN 2-8318-4964-0



ICS 35.100.10; 33.180.10

Typeset and printed by the IEC Central Office
GENEVA, SWITZERLAND

Copyright International Organization for Standardization
Reproduced by IHS under license with ISO
No reproduction or networking permitted without license from IHS

Not for Resale