INTERNATIONAL STANDARD

ISO/IEC 9314-3

First edition
1990-10-15

No reproduction or networking permitted without license from IHS

Information processing systems — Fibre distributed Data Interface (FDDI) —

Part 3:
Physical Layer Medium Dependent (PMD)

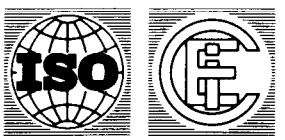

Reference number
ISO/IEC 9314-3 : 1990 (E)

Provided by IHS under license with ISO

Copyright International Organization for Standardization
Not for Resale

Contents

Page

Foreword vi

Introduction. vii

1 Scope. 1

2 Normative references 2

3 Definitions. 2

4 Conventions and abbreviations. 5

4.1 Conventions 5

4.2 Abbreviations. 5

5 General description 6

5.1 Ring Overview 6

5.2 Environment 9

6 Services. 9

6.1 PMD-to-PHY services. 10

6.2 PMD-to-SMT services 13

7 Media attachment 14

7.1 Media Interface Connector (MIC) 15

7.2 MIC intermateability detail. 20

8 Media signal interface 20

8.1 Active output interface 20

8.2 Active input interface. 22

8.3 Station bypass interface 23

© ISO/IEC 1990
All rights reserved. No part of this publication may be reproduced or utilized in any form or by any means, electronic or mechanical, including photocopying and microfilm, without permission in writing from the publisher.

International Organization for Standardization
Case postale 56 • CH-1211 Genève 20 • Switzerland
Printed in Switzerland

Provided by IHS under license with ISO
Copyright International Organization for Standardization
Not for Resale
No reproduction or networking permitted without License from IHS

8.4 Station bypass timing definitions 23

9 Interface signals 26

9.1 Optical Receiver 26

9.2 Optical Transmitter 28

10 Cable Plant Interface Specification 28

10.1 Cable plant specification 28

10.2 Bypassing 29

10.3 Connectors and splices 30

Tables

Table 1 Characteristics of active output interface 21

Table 2 Characteristics of active input interface 24

Table 3 Characteristics of station bypass interface . . . 24

Table 4 Summary of assertion and deassertion requirements 28

Table 5 Suggested fibre for a cable plant 29

Table 6 Bandwidth and attenuation values. 29

Figures

Figure 1 FDDI links and connections. 7

Figure 2 FDDI topology example 8

Figure 3 Dual attachment PMD services. 11

Figure 4 Example of Media Interface Connector (MIC) plug. 15

Figure 5 MIC receptacle - fibre/device. 16

Figure 6 MIC receptacle - fibre/fibre 17

Figure 7 MIC ferrule geometry. 18

Figure 8 Receptacle keying detail 19

Figure 9 Source spectral width and centre wavelength requirements 21

Figure 10 Pulse envelope 22

--`,,```,,,,````-`-`,,`,,`,`,,`---

Copyright International Organization for Standardization
Not for Resale

Provided by IHS under license with ISO

Figure 11 Expanded pulse envelope 23

Figure 12 Station bypass timing characteristics 25

Figure 13 Signal detect thresholds and timing 27

Figure 14 Minimum dispersion wavelength and slope limits 30

Figure 15 Cable plant example 31

Annexes

Annex A Test methods 32

A.1 Active output interface 32

A.2 Active input interface 33

A.3 Distortion and jitter contributions 33

A.4 Distortion and jitter measurements 34

A.5 DDJ test pattern for jitter measurements 35

Annex B Optical test procedures 37

Annex C Alternative cable plant usage 38

C.1 Alternative fibre sizes 38

C.2 Theoretical connection losses 38

C.3 Optical bypass switches 39

Table C.1 Alternative fibre types 38

Table C.2 Theoretical connection losses for mixed fibre types 38

Table C.3 Summary of loss budget remaining 39

Annex D Electrical interface considerations 40

Figure D.1 Test configuration for dc-coupled components 40

Figure D.2 Test configuration for ac-coupled components 41

Annex E Example of system jitter allocation 42

E.1 Jitter sources 42

Provided by IHS under license with ISO

Copyright International Organization for Standardization
Not for Resale

E.2 Jitter calculation example 42

Table E.1 System jitter budget example 43

Annex F Keying considerations 44

F.1 Receptacle keying 44

F.2 Plug keying 44

F.3 Cabling systems 45

Annex G Reference non-precision MIC test plug 46

Figure G.1 Reference non-precision MIC plug 47

Provided by IHS under license with ISO

Copyright International Organization for Standardization
Not for Resale

Foreword

ISO (the International Organization for Standardization) and IEC (the International Electrotechnical Commission) together form a system for worldwide standardization as a whole. National bodies that are members of ISO or IEC participate in the development of International Standards through technical committees established by the respective organization to deal with particular fields of technical activity. ISO and IEC technical committees collaborate in fields of mutual interest. Other international organizations, governmental and non-governmental, in liaison with ISO and IEC, also take part in the work.

In the field of information technology, ISO and IEC have established a joint technical committee, ISO/IEC JTC 1. Draft International Standards adopted by the joint technical committee are circulated to national bodies for approval before their acceptance as International Standards. They are approved in accordance with procedures requiring at least 75 % approval by the national bodies voting.

International Standard ISO/IEC 9314-3 was prepared by Joint Technical Committee ISO/IEC JTC 1, *Information technology.*

ISO/IEC 9314-3 consists of the following parts, under the general title *Information processing systems — Fibre distributed Data Interface (FDDI)*

- *Part 1: Token Ring Physical Layer Protocol (PHY)*
- *Part 2: Token Ring Media Access Control MAC*
- *Part 3: Token Ring Physical Layer Medium Dependent (PMD)*

Annexes A to G are for information only.

--`,,```,,,,````-`-`,,`,,`,`,,`---

Provided by IHS under license with ISO

Copyright International Organization for Standardization
Not for Resale

Introduction

This part of ISO/IEC 9314 on the FDDI token ring physical layer, medium dependent is intended for use in a high-performance multistation network. This protocol is designed to be effective at 100 Mbit/s using a token ring architecture and fibre optics as the transmission medium over distances of several kilometres in extent.

--`,,```,,,,````-`-`,,`,,`,`,,`---

Provided by IHS under license with ISO

Copyright International Organization for Standardization
Not for Resale

Information processing systems — Fibre distributed Data Interface (FDDI) —

Part 3:
Physical Layer Medium Dependent (PMD)

1 Scope

This part of ISO/IEC 9314 specifies Physical Layer, Medium Dependent (PMD) requirements for the Fibre Distributed Data Interface (FDDI).

The FDDI provides a high-bandwidth (100 Mbit/s) general-purpose interconnection among computers and peripheral equipment using fibre optics as the transmission medium. The FDDI may be configured to support a sustained transfer rate of approximately 80 Mbit/s (10 Mbyte/s). It may not meet the response time requirements of all unbuffered high-speed devices. The FDDI establishes the connection among many FDDI nodes (stations) distributed over distances of several kilometres in extent. Default values for FDDI were calculated on the basis of 1 000 physical connections and a total fibre path length of 200 km.

The FDDI consists of

(a) A Physical Layer (PL) which is divided into two sublayers:

(1) A Physical Layer, Medium Dependent (PMD), which provides the digital baseband point-to-point communication between nodes in the FDDI network. PMD shall provide all services necessary to transport a suitably coded digital bit stream from node to node. PMD specifies the point of interconnection requirements for conforming FDDI stations and cable plants at both sides of the Media Interface Connector (MIC). PMD includes the following:

- The optical power budgets for cable plants using 62,5/125 μm fibre optic cables and optical bypass switches.
- The MIC receptacle mechanical mating requirements including the keying features.
- The 62,5/125 μm fibre optic cable requirements.
- The services provided by PMD to PHY and SMT.

(2) A Physical Layer Protocol (PHY), which provides connection between PMD and the Data Link Layer (DLL). PHY establishes clock synchronization with the upstream code-bit data stream and decodes this incoming code-bit stream into an equivalent symbol stream for use by the higher layers. PHY provides encoding and decoding between data and control indicator symbols and code bits, medium conditioning and initializing, the synchronization of incoming and outgoing code-bit clocks, and the delineation of octet boundaries as required for the transmission of information to or

No reproduction or networking permitted without license from IHS

Provided by IHS under license with ISO
Copyright International Organization for Standardization
Not for Resale

from higher layers. Information to be transmitted on the interface medium is encoded by the PHY into a grouped transmission code.

(b) A Data Link Layer (DLL), which controls the accessing of the medium and the generation and verification of frame check sequences to ensure the proper delivery of valid data to the other layers. DLL also concerns itself with the generation and recognition of device addresses and the peer-to-peer associations within the FDDI network. For the purposes of this part of ISO/IEC 9314, references to DLL are made in terms of the Media Access Control (MAC) entity, which is the lowest sublayer of DLL.

(c) A Station Management (SMT)[1] which provides the control necessary at the node level to manage the processes underway in the various FDDI layers such that a node may work co-operatively on a ring. SMT provides services such as control of configuration management, fault isolation and recovery, and scheduling procedures.

This part of ISO/IEC 9314 is a supporting document to ISO/IEC 9314-1 which should be read in conjunction with it.

The SMT document should be consulted for information pertaining to supported FDDI node and network configurations.

ISO/IEC 9314 specifies the interfaces, functions, and operations necessary to insure interoperability between conforming FDDI implementations. This part of ISO/IEC 9314 is a functional description. Conforming implementations may employ any design technique which does not violate interoperability.

2 Normative references

The following standards contain provisions which, through reference in this text, constitute provisions of this part of ISO/IEC 9314. At the time of publication, the editions indicated were valid. All standards are subject to revision, and parties to agreements based on this part of ISO/IEC 9314 are encouraged to investigate the possibility of applying the most recent editions of the standards listed below. Members of IEC and ISO maintain registers of currently valid International Standards.

ISO 9314-1: 1989, *Information processing systems - Fibre Distributed Data Interface (FDDI) - Part 1: Token Ring Physical Layer Protocol (PHY).*

ISO 9314-2: 1989, *Information processing systems - Fibre Distributed Data Interface (FDDI) - Part 2: Token Ring Media Access Control (MAC).*

3 Definitions

For the purposes of this part of ISO/IEC 9314, the following definitions apply. Other parts of ISO/IEC 9314, e.g., MAC and PHY, may contain additional definitions of interest.

3.1 attenuation: Level of optical power loss, expressed in decibels.

3.2 average power: The optical power measured using an average reading power meter when the FDDI station is transmitting a stream of Halt symbols.

---

[1] SMT will form the subject of a future part of ISO/IEC 9314.

Provided by IHS under license with ISO
Copyright International Organization for Standardization
Not for Resale

3.3 bypass: The ability of a station to isolate itself optically from the FDDI network while maintaining the continuity of the cable plant.

3.4 centre wavelength: The average of the two wavelengths measured at the half amplitude points of the power spectrum.

3.5 code bit: The smallest signalling element used by the Physical Layer for transmission on the medium.

3.6 concentrator: An FDDI node that has additional PHY/PMD entities beyond those required for its own attachment to an FDDI network. These additional PHY/PMD entities are for the attachment of other FDDI nodes (including other concentrators) in a tree topology.

3.7 connector plug: A device used to terminate an optical conductor(s) cable.

3.8 connector receptacle: The fixed or stationary half of a connection that is mounted on a panel/bulkhead. Receptacles mate with plugs.

3.9 counter-rotating: An arrangement whereby two signal paths, one in each direction, exist in a ring topology.

3.10 dual attachment concentrator: A concentrator that offers two attachments to the FDDI network which are capable of accommodating a dual (counter-rotating) ring.

3.11 dual attachment station: A station that offers two attachments to the FDDI network which are capable of accommodating a dual (counter-rotating) ring.

3.12 dual ring (FDDI dual ring): A pair of counter-rotating logical rings.

3.13 entity: An active service or management element within an Open Systems Interconnection (OSI) layer, or sublayer.

3.14 extinction ratio: The ratio of the low, or off optical power level (P_L) to the high, or on optical power level (P_H) when the station is transmitting a stream of Halt symbols.

$$\text{Extinction ratio (\%)} = (P_L/P_H) \times 100$$

3.15 fibre: Dielectric material that guides light; waveguide.

3.16 fibre optic cable: A cable containing one or more optical fibres.

3.17 interchannel isolation: The ability to prevent undesired optical energy from appearing in one signal path as a result of coupling from another signal path; cross talk.

3.18 jitter, data dependent (DDJ): Jitter that is related to the transmitted symbol sequence. DDJ is caused by the limited bandwidth characteristics and imperfections in the optical channel components. DDJ results from non-ideal individual pulse responses and from variation in the average value of the encoded pulse sequence which may cause base-line wander and may change the sampling threshold level in the receiver.

3.19 jitter, duty cycle distortion (DCD): Distortion usually caused by propagation delay differences between low-to-high and high-to-low transitions. DCD is manifested as a pulse width distortion of the nominal baud time.

Provided by IHS under license with ISO
Copyright International Organization for Standardization
Not for Resale

3.20 jitter, random (RJ): RJ is due to thermal noise and may be modelled as a Gaussian process. The peak-peak value of RJ is of a probabilistic nature and thus any specific value requires an associated probability.

3.21 logical ring: The set of MACs serially connected to form a single ring.

3.22 media interface connector (MIC): A mated connector pair that provides an attachment between an FDDI node and a fibre optic cable plant. The MIC consists of two parts; a MIC plug and a MIC receptacle.

3.23 MIC plug: The male part of the MIC which terminates a fibre optical cable.

3.24 MIC receptacle: The female part of the MIC which is contained in an FDDI node.

3.25 network (FDDI network): A collection of FDDI nodes interconnected to form a trunk, or a tree, or a trunk with multiple trees. This topology is sometimes called a dual ring of trees.

3.26 node: A generic term applying to any FDDI ring attachment (station or concentrator).

3.27 numerical aperture (NA): The sine of the radiation or acceptance half angle of an optical fibre, multiplied by the refractive index of the material in contact with the exit or entrance face.

3.28 optical fall time: The time interval for the falling edge of an optical pulse to transition from 90 % to 10 % of the pulse amplitude.

3.29 optical reference plane: The plane that defines the optical boundary between the MIC Plug and the MIC Receptacle.

3.30 optical rise time: The time interval for the rising edge of an optical pulse to transition from 10 % to 90 % of the pulse amplitude.

3.31 physical connection: The full-duplex physical layer association between adjacent PHY entities (in concentrators or stations) in an FDDI network, i.e., a pair of Physical Links.

3.32 physical link: The simplex path (via PMD and attached medium) from the transmit function of one PHY entity to the receive function of an adjacent PHY entity (in concentrators or stations) in an FDDI network.

3.33 primitive: An element of the services provided by one entity to another.

3.34 receiver (optical): An opto-electronic circuit that converts an optical signal to an electrical logic signal.

3.35 ring: A set of stations wherein information is passed sequentially between stations, each station in turn examining or copying the information, finally returning it to the originating station. In FDDI usage, the term "ring" or "FDDI ring" refers to the a dual (counter-rotating) ring.

3.36 services: The services provided by one entity to another. Data services are provided to a higher layer entity; management services are provided to a management entity in the same or another layer.

3.37 single attachment concentrator: A concentrator that offers one attachment to the FDDI network.

Provided by IHS under license with ISO
Copyright International Organization for Standardization
Not for Resale
No reproduction or networking permitted without license from IHS

3.38 single attachment station: A station that offers one attachment to the FDDI network.

3.39 spectral width, full width half maximum (FWHM): The absolute difference between the wavelengths at which the spectral radiant intensity is 50,0 % of the maximum power.

3.40 station: An addressable node on an FDDI network capable of transmitting, repeating, and receiving information. A station has exactly one SMT and at least one MAC, one PHY, and one PMD.

3.41 transmitter (optical): An opto-electronic circuit that converts an electrical logic signal to an optical signal.

3.42 trunk: A physical loop topology, either open or closed, employing two optical fibre signal paths, one in each direction (i.e., counter-rotating), forming a sequence of peer connections between FDDI nodes. When the trunk forms a closed loop it is sometimes called a trunk ring.

3.43 tree: A physical topology consisting of a hierarchy of master-slave connections between a concentrator and other FDDI nodes (including subordinate concentrators).

4 Conventions and abbreviations

4.1 Conventions

The terms SMT, MAC, PHY, and PMD, when used without modifiers, refer specifically to the local instances of these entities.

Low lines (e.g., control_action) are used as a convenience to mark the name of signals, functions, and the like, which might otherwise be misinterpreted as independent individual words if they were to appear in text.

The use of a period (e.g., PM_UNITDATA.request) is equivalent to the use of low lines except that a period is used as an aid to distinguish modifier words appended to an antecedent expression.

The use of a colon (e.g., N:PM_UNITDATA.request) distinguishes between two or more instances of the same signal where N designates the other source/destination entity.

4.2 Abbreviations

AII	Active Input Interface
AOI	Active Output Interface
ANS_Max	Maximum acquisition time (no signal)
AS_Max	Maximum acquisition time (signal)
BER	Bit Error Rate
BERT	Bit Error Rate Tester
DCD	Duty Cycle Distortion (jitter)
DDJ	Data Dependent Jitter
FOTP	Fibre Optic Test Procedure
FWHM	Full Width Half Maximum
I_Max	Maximum switching insertion/deinsertion time
LS_Max	Maximum line state change time
MIC	Media Interface Connector
MI_Max	Maximum media interruption time
NA	Numerical Aperture
NRZI	Non Return to Zero, Invert on ones

Provided by IHS under license with ISO

Copyright International Organization for Standardization
Not for Resale

RJ	Random Jitter
SAE	Static Alignment Error (clock offset error)
T_{DD}	Difference delay time
T_{MI}	Media interruption time
T_{OS}	Optical switching speed
T_{SI}	Switching insertion/deinsertion time

5 General description

5.1 Ring Overview

A ring consists of a set of stations logically connected as a serial string of stations and transmission media to form a closed loop. Information is transmitted sequentially, as a stream of suitably encoded symbols, from one station to the next. Each station generally regenerates and repeats each symbol and serves as the means for attaching one or more devices to the ring for the purpose of communicating with other devices on the ring. The method of actual physical attachment to the FDDI ring may vary and is dependent on specific application requirements as described in subsequent paragraphs.

The basic building block of an FDDI ring is a physical connection as shown in figure 1. A physical connection consists of the Physical Layers (each composed of a PMD and a PHY entity) of two stations that are connected over the transmission medium by a Primary Link and a Secondary Link. A Primary Link consists of an output, called Primary Out, of a Physical Layer, communicating over a Primary medium to the input, called Primary In, of a second Physical Layer. The Secondary Link consists of the output, called Secondary Out, of the second Physical Layer communicating over a Secondary medium to the input, called Secondary In, of the first Physical Layer. Physical connections may be subsequently logically connected within stations, via attached MACs or other means, to create the network. As such, the function of each station is implementer-defined and is determined by the specific application or site requirements.

Two classes of stations are defined: dual (attachment) and single (attachment). FDDI trunk rings may be composed only of dual attachment stations which have two PMD entities (and associated PHY entities) to accommodate the dual ring. Concentrators provide additional PMD entities beyond those required for their own attachment to the FDDI network, for the attachment of single attachment stations which have only one PMD and thus cannot directly attach to the FDDI trunk ring. A dual attachment station, or one-half of it, may be substituted for a single attachment station in attaching to a concentrator. The FDDI network consists of all attached stations.

The example of figure 2 shows the concept of multiple physical connections used to create logical rings. As shown, the logical sequence of MAC connections is stations 1, 3, 5, 8, 9, 10, and 11. Stations 2, 3, 4, and 6 form an FDDI trunk ring. Stations 1, 5, 7, 10, and 11 are attached to this ring by lobes branching out from the stations that form it. Stations 8 and 9 are in turn attached by lobes branching out from station 7. Stations 2, 4, 6, and 7 are concentrators, serving as the means for attaching multiple stations to the FDDI ring. Concentrators may or may not have MAC entities and station functionality. The concentrator examples of figure 2 do not show any MACs although their presence is implied by the designation of these concentrators as stations.

Connection to the physical medium as established by PMD is controlled by the station insertion and removal algorithms of Station Management (SMT) which are beyond the scope of this part of ISO/IEC 9314.

Provided by IHS under license with ISO
Copyright International Organization for Standardization
Not for Resale

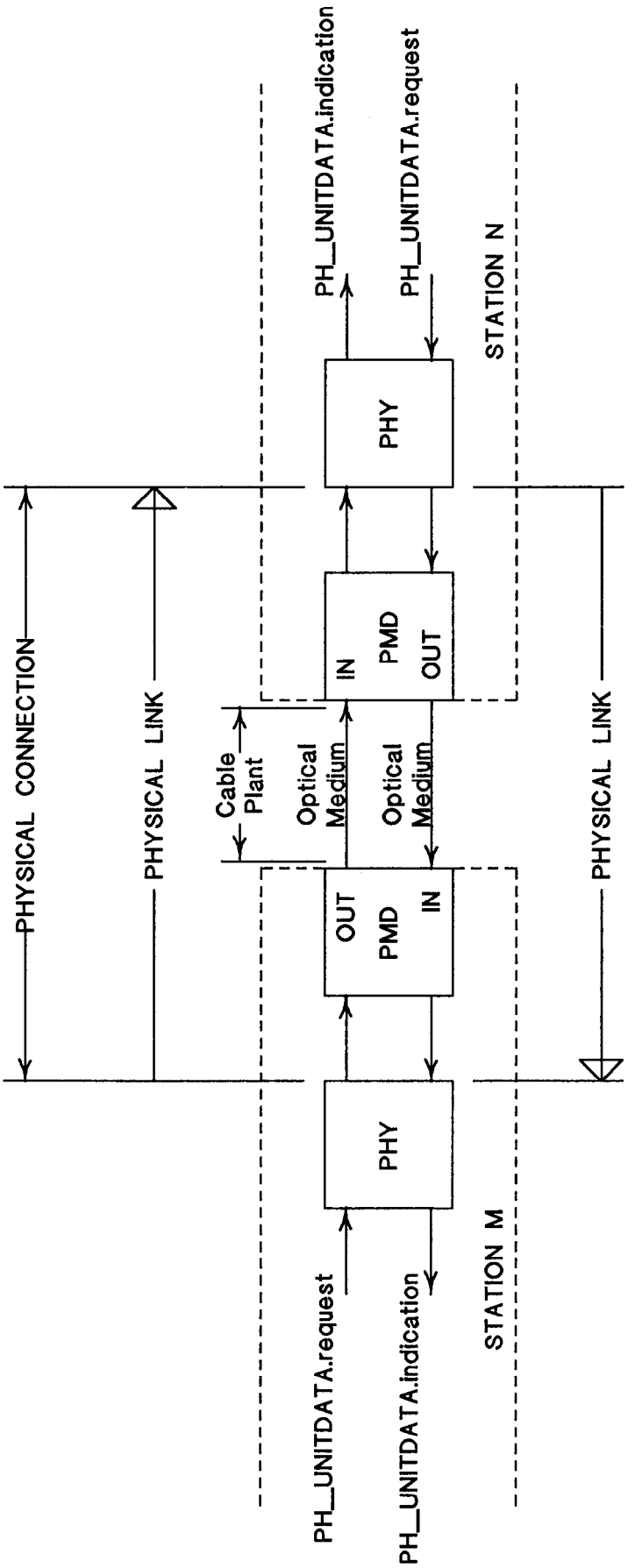

Figure 1 - FDDI links and connections

No reproduction or networking permitted without license from IHS

Provided by IHS under license with ISO

Copyright International Organization for Standardization
Not for Resale

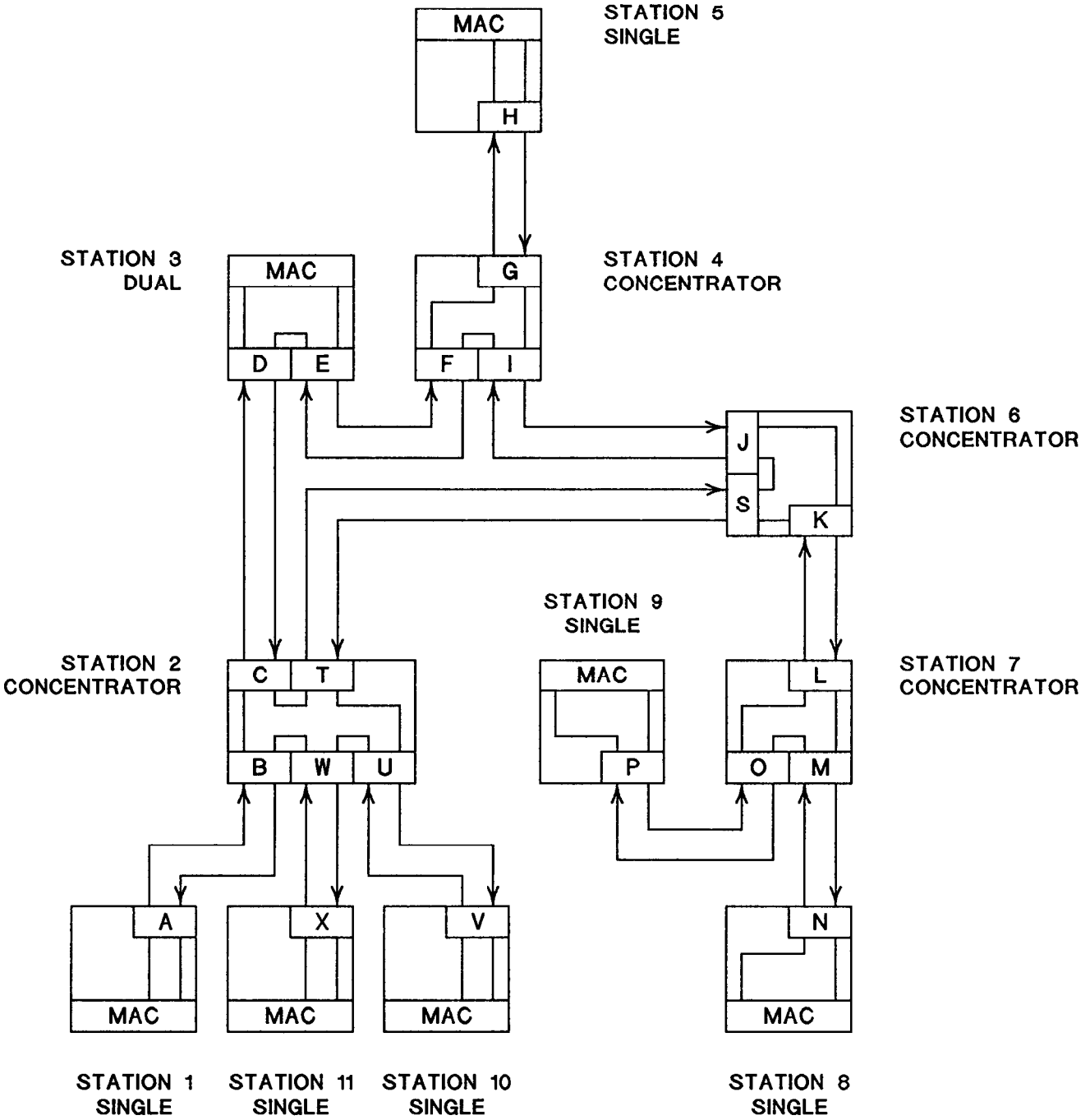

Figure 2 - FDDI topology example

Copyright International Organization for Standardization
Not for Resale

Provided by IHS under license with ISO

5.2 Environment

As shown in figure 2 and as described 5.1, an FDDI network consists of a virtually unlimited number of connected stations. SMT establishes the physical connections between stations, and the correct internal station configurations, to create an FDDI network.

It is understood that restrictions of the transmission media as defined (i.e., dynamic range and bandwidth) may place limits on realizable physical configurations. Trade-offs may be made within specific site applications, such as distance versus optical bypassing, consistent with these limitations. While not intended to be limiting, the FDDI has been defined to serve three major application environments including:

5.2.1 Data centre environment

The data centre environment is characterized by a relatively few number of stations, typically mainframe computers and peripheral equipment, where a high degree of reliability and fault tolerance is required. The FDDI network in a data centre environment is often typically comprised of a preponderance of dual stations with relatively few, if any, concentrators. In this environment, it is desirable that two stations maintain unimpaired operation even under the circumstance where up to four intervening stations are powered down, thereby causing their optical bypass switches to be in the active connection path between the communicating stations. This environment assumes a total fibre length not exceeding 400 m between two communicating stations.

5.2.2 Office/building environment

The office/building environment is characterized both by a relatively large number of single attachment stations (typically smaller computers, communications concentrators, workstations, and peripherals) and by a radial wiring scheme to connect these stations. Moreover, the stations are frequently powered down by their users. Concentrators, which are typically always powered on, are often used to attach these stations to the FDDI network because they facilitate radial wiring and because concentrators allow any set of the single attachment stations to be without power.

5.2.3 Campus environment

The campus environment is characterized by stations distributed across multiple buildings where links of up to 2 km may be encountered. Such a distance requirement is expected to be uncommon and would not allow the bypass techniques that are useful in the data centre environment. This application is typically used for trunk lines between office/building and data centre environments.

6 Services

This clause specifies the services provided by the PMD. These services do not imply any particular implementation or any interface. Services described are

(a) PMD services provided to the local Physical Protocol (PHY) entity (indicated by PM__ prefix).

(b) PMD services provided to the local Station Management (SMT) entity (indicated by SM__PM__ prefix).

--`,,```,,,,````-`-`,,`,,`,`,,`---

Provided by IHS under license with ISO

Copyright International Organization for Standardization
Not for Resale

An optional qualifier is sometimes needed to identify a signal unambiguously where there are multiple instances of the same signal within a service interface (indicated by (N:) prefix). Thus, a prefix of (N:)PM__ or (N:)SM__PM__ indicates that a PMD could duplicate a signal a number of times and identify each signal with a unique qualifier. For example, a PMD in a dual station would use A:PM__ and B:PM__ as prefixes when required, whereas a PMD in a single station may only use PM__ as a prefix. Concentrators may use other qualifiers, such as M1:PM__ through Mn:PM__, to uniquely identify a signal.

Figure 3 shows the block diagram organization of the FDDI Physical Medium Dependent (PMD) including the separate functions, related signals, and interfaces which it contains. This figure is not intended to show physical implementation or physical orientation of the components within an FDDI station. As described, the interfaces and signals between PMD, PHY, and SMT are examples and are intended to be logical rather than physical. Any other set of signals that causes the same physical behaviour is equally valid.

6.1 PMD-to-PHY services

This subclause specifies the services provided at the interface between the PMD and the PHY entities of the Physical Layer, to allow PHY to exchange an NRZI code-bit stream with peer PHY entities. The PMD parameters have been selected to be compatible with the encoding and decoding techniques provided by the FDDI PHY. PMD translates the encoded electrical data signals to and from optical signals suitable for the fibre medium but does not perform any further encoding or decoding. Additional detail is provided in clauses 8 and 9 concerning conditions that generate these primitives and PMD actions upon receipt of PHY-generated primitives.

The following primitives are defined:

PM__UNITDATA.request
PM__UNITDATA.indication
PM__SIGNAL.indication

Each primitive includes the information that is passed between the PMD and PHY entities.

6.1.1 PM__UNITDATA.request

This primitive defines the transfer of encoded NRZI data from PHY to PMD.

6.1.1.1 Semantics of the primitive

(N:)PM__UNITDATA.request	(PM__Request (NRZI code))

The data conveyed by PM__Request shall be a continuous code-bit sequence.

6.1.1.2 When generated

PHY continuously sends the PMD layer the current NRZI code polarity.

Provided by IHS under license with ISO
Copyright International Organization for Standardization
Not for Resale

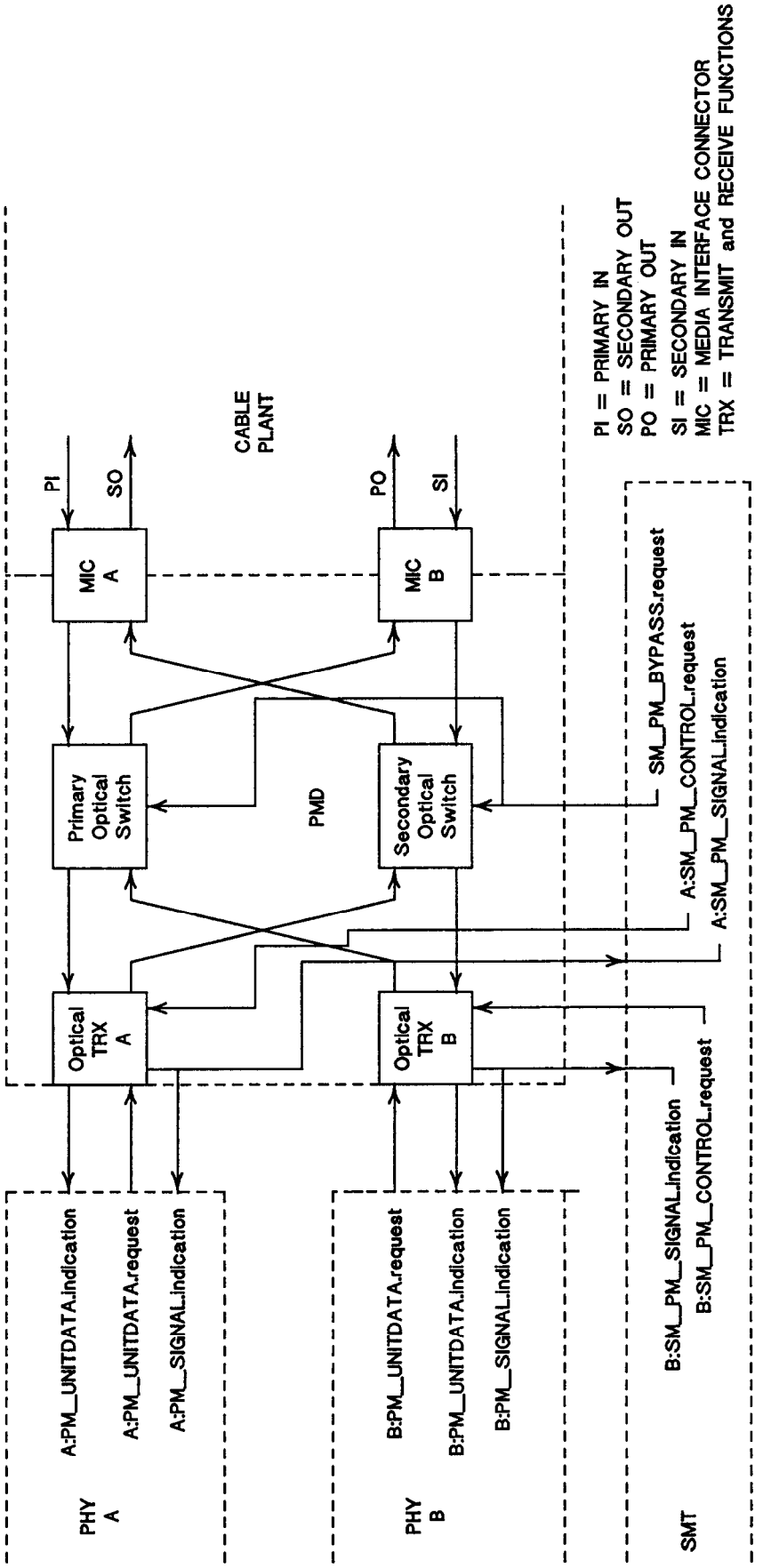

Figure 3 - Dual attachment PMD services

No reproduction or networking permitted without license from IHS

Provided by IHS under license with ISO

Copyright International Organization for Standardization
Not for Resale

6.1.1.3 Effect of receipt

Upon receipt of this primitive and of SM_PM_CONTROL.request with a Control_Action parameter of Transmit_Enable, PMD shall convert an electrical NRZI encoded code-bit sequence into the optical domain of the interface medium. While the code bits are represented by transitions of signal state, PMD shall respond to the logic level of PM_UNITDATA.request. PMD shall transmit a low light power level upon receipt of a logic "0" and a high light power level upon receipt of a logic "1".

6.1.2 PM_UNITDATA.Indication

This primitive defines the transfer of encoded NRZI data from PMD to PHY.

6.1.2.1 Semantics of the primitive

```
(N:)PM_UNITDATA.indication          (
                                    PM_Indication (NRZI code)
                                    )
```

The data conveyed by PM_Indication shall be a continuous code-bit sequence.

6.1.2.2 When generated

PMD shall continuously send the current encoded NRZI code to PHY.

6.1.2.3 Effect of receipt

In normal non-Loopback mode, PM_Indication is continuously sampled by the clock recovery and decode functions of the PHY entity.

6.1.3 PM_SIGNAL.Indication

This primitive is generated by PMD and asserted to PHY to indicate the status of the optical signal being received by PMD.

6.1.3.1 Semantics of the primitive

```
(N:)PM_SIGNAL.indication            (
                                    Signal_Detect(status)
                                    )
```

The Signal_Detect(status) parameter shall indicate whether the quality and optical power level of the inbound optical signal is satisfactory (status = on) or unsatisfactory (status = off). When status = off, then PM_UNITDATA.indication is undefined but actions based on PM_SIGNAL.indication shall be interpreted as if PM_UNITDATA.indication is a continuous logic "0" code-bit sequence.

6.1.3.2 When generated

PMD shall generate this primitive to indicate the status of the Signal_Detect.

6.1.3.3 Effect of receipt

The effect of PHY on receipt of this primitive is, when status = off, to enter Quiet_Line-State, and when status = on, to enable detection of other line states.

Provided by IHS under license with ISO
Copyright International Organization for Standardization
Not for Resale

6.2 PMD-to-SMT services

The services supplied by PMD allow SMT to control the operation of PMD. The PMD shall perform the requested SMT services pre-emptively over any requested PHY services. Additional detail is provided in clauses 8 and 9 concerning conditions that generate these primitives and PMD actions upon receipt of SMT-generated primitives.

The following primitives are defined:

SM_PM_CONTROL.request
SM_PM_BYPASS.request
SM_PM_SIGNAL.indication

Each primitive includes the information that is passed between the PMD and SMT entities.

6.2.1 SM_PM_CONTROL.request

This primitive is generated by SMT and asserted to PMD to force the transmit function to place a logic "0" optical signal on the outbound medium.

6.2.1.1 Semantics of the primitive

(N:)SM_PM_CONTROL.request (
Control_Action
)

The Control_Action parameter shall include the following: Transmit_Enable and Transmit_Disable.

6.2.1.2 When generated

SMT generates this primitive whenever it wants to enable or disable the PMD optical transmitter.

6.2.1.3 Effect of receipt

Receipt of this primitive by PMD with a Control_Action parameter of Transmit_Disable shall cause PMD to transmit a logic "0" optical signal (i.e., low light) pre-emptively over the PM_UNITDATA.request primitive as described in 9.2.

Receipt of this primitive by PMD with a Control_Action parameter of Transmit_Enable shall cause the PMD to transmit the optical signal requested by the PM_UNITDATA.request primitive. Receipt of this primitive shall not affect PM_SIGNAL.indication or PM_UNITDATA.indication.

6.2.2 SM_PM_BYPASS.request

This primitive is generated by SMT and asserted to PMD to indicate that SMT wants to join or leave the FDDI ring.

6.2.2.1 Semantics of the primitive

SM_PM_BYPASS.request (
Control_Action
)

No reproduction or networking permitted without license from IHS

Provided by IHS under license with ISO
Copyright International Organization for Standardization
Not for Resale

The Control_Action parameter shall include the following: Insert, Deinsert.

6.2.2.2 When generated

SMT generates this primitive whenever it wants to activate or deactivate the optical bypass switches.

6.2.2.3 Effect of receipt

Upon receipt of this primitive with a Control_Action parameter of Insert, PMD shall activate the optical switch such that the MIC inbound optical signal from the cable plant is directed to the optical receiver (see figure 3). The output of the optical transmitter shall be directed to the MIC output to the cable plant.

Upon receipt of this primitive with a Control_Action parameter of Deinsert, PMD shall deactivate the optical switch such that the MIC inbound optical signal from the cable plant is directed through the switch to the MIC output to the cable plant. The output of the optical transmitter shall be directed through the optical switch to the input of the optical receiver. This state is called the bypassed mode.

NOTE - Optical bypass switches are optional in a FDDI ring. Stations that do not employ optical switches do not require this service.

6.2.3 SM_PM_SIGNAL.Indication

This primitive is generated by PMD and asserted to SMT to indicate the status of the optical signal level being received by PMD.

6.2.3.1 Semantics of the primitive

```
(N:)SM_PM_SIGNAL.Indication          (
                                     Signal_Detect(status)
                                     )
```

The Signal_Detect(status) parameter shall indicate whether the quality and optical power level of the inbound optical signal level is satisfactory (status = on) or unsatisfactory (status = off). When status = off, then SM_PM_UNITDATA.indication is undefined but actions based on SM_PM_SIGNAL.indication shall be interpreted as if PM_UNITDATA.indication is a continuous logic "0" code-bit sequence.

6.2.3.2 When generated

PMD shall generate this primitive to indicate the status of the Signal_Detect.

6.2.3.3 Effect of receipt

The effect of receipt of this primitive on SMT is not defined.

7 Media attachment

An FDDI station shall be attached to the fibre optic medium by a Media Interface Connector (MIC). The media connection between adjacent stations consists of a duplex fibre optic cable assembly attached to the respective Media Interface Connectors at the stations. To ensure interconnectability between conforming FDDI stations, a Media Interface Connector mating

Provided by IHS under license with ISO
Copyright International Organization for Standardization
Not for Resale

interface is specified at the MIC receptacle. However, a specific fibre optic cable assembly is not defined.

7.1 Media Interface Connector (MIC)

The primary function of the Media Interface Connector (MIC) connection is to align the optical transmission fibre mechanically with another optical transmission fibre or to an optical port on a component such as a receiver, a transmitter, or a bypass switch.

NOTE - The FDDI MIC connector is at present under consideration as a standard.

Figures 5 through 8 specify the female part (receptacle) of the MIC connection. The MIC receptacle shall have latch points that mate with latches on the body of the MIC plug and ports that mate with the MIC plug ferrules and align them and the ends of the associated fibres they contain with the optical reference plane.

Figure 4 shows a possible implementation of the Media Interface Connector (MIC) plug, terminating a duplex fibre optic cable. The MIC plug shall have mechanical latches that mate with the latch points in the MIC receptacle. The MIC plug shall have two ferrules, one for each optical fibre in the optical transmission cable, which hold the fibres. These ferrules shall be mounted in the body of the MIC plug in such a way as to allow resilient movement during the mating process so as to align them to the ports in the MIC receptacle and position the optical fibre ends at the optical reference plane. Any MIC plug implementation is allowed, provided it is compatible with the intermateability geometry requirements shown in figures 5 through 8.

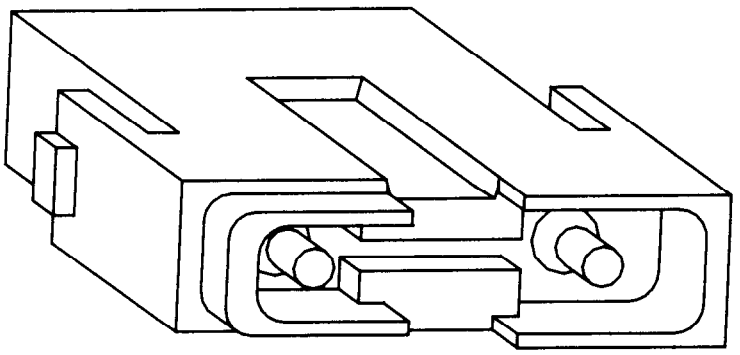

Figure 4 - Example of Media Interface Connector (MIC) plug

The MIC receptacle shall provide mechanical polarization to prevent improper attachment of input and output fibres.

The MIC receptacles of a station shall be keyed to prevent improper MIC plug attachment. Keying of the MIC plug itself is optional. However, keyed or not, the MIC plug shall be marked (labelled) to indicate proper attachment.

Four keys are defined for MIC receptacles as shown in figure 8. MIC A (Primary In/Secondary Out) and MIC B (Secondary In/Primary Out) provide for attachment of dual attachment stations into an FDDI ring. MIC M, used with the concentrator function, provides for the attachment of single attachment stations to a concentrator. MIC S, used on a single attachment station, provides for its attachment to a concentrator. Requirements for the use of MIC A, MIC B, MIC M, and MIC S in FDDI networks will be specified in SMT, the subject of a future part of ISO/IEC 9314, and are beyond the scope of this part of ISO/IEC 9314.

Provided by IHS under license with ISO
Copyright International Organization for Standardization
Not for Resale

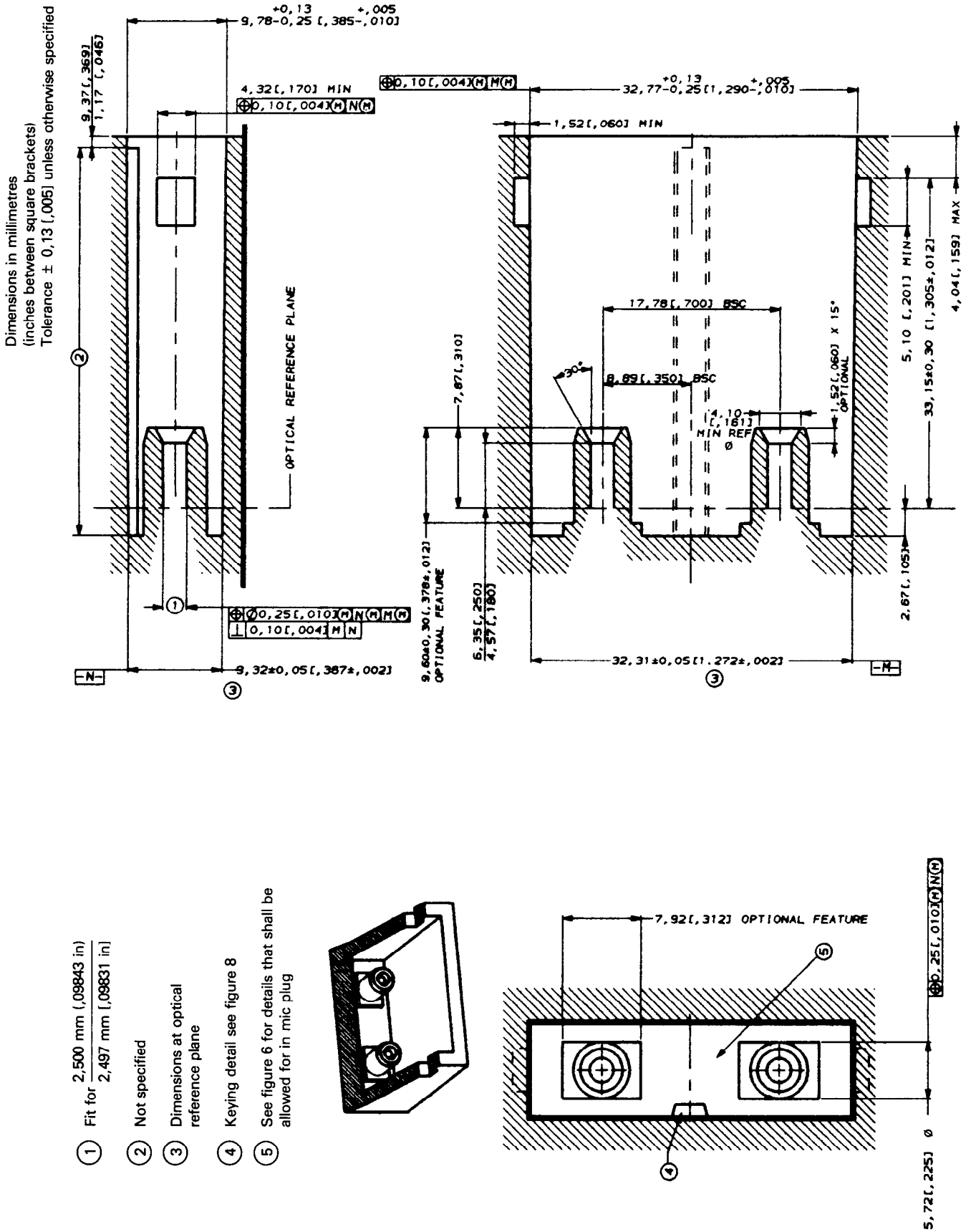

(1) Fit for $\frac{2{,}500 \text{ mm } [,09843 \text{ in})}{2{,}497 \text{ mm } [,09831 \text{ in}]}$

(2) Not specified

(3) Dimensions at optical reference plane

(4) Keying detail see figure 8

(5) See figure 6 for details that shall be allowed for in mic plug

Figure 6 - MIC receptacle - fibre/device

Copyright International Organization for Standardization
Not for Resale

Provided by IHS under license with ISO

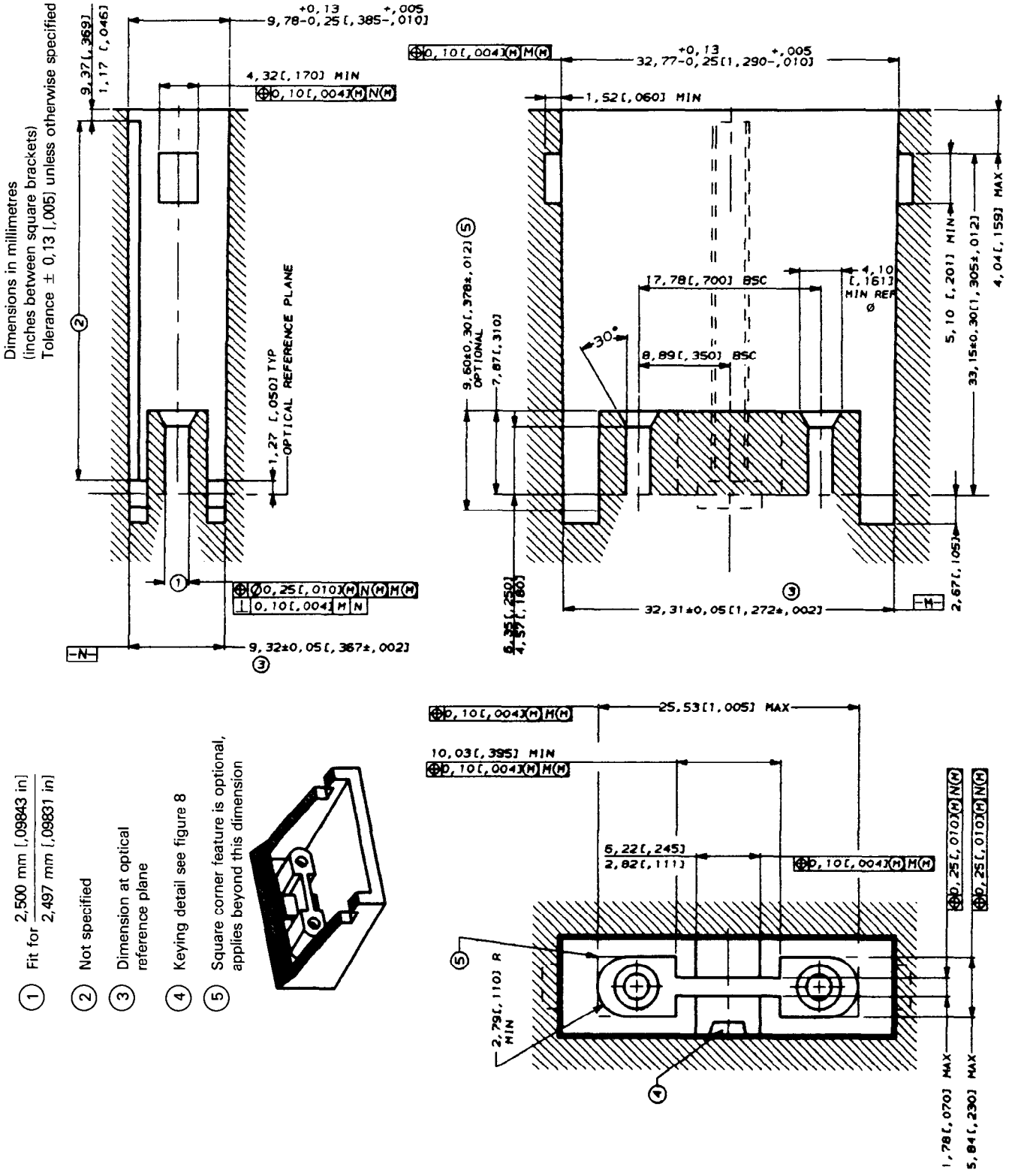

Figure 6 - MIC receptacle - fibre/fibre

Provided by IHS under license with ISO

Copyright International Organization for Standardization
Not for Resale

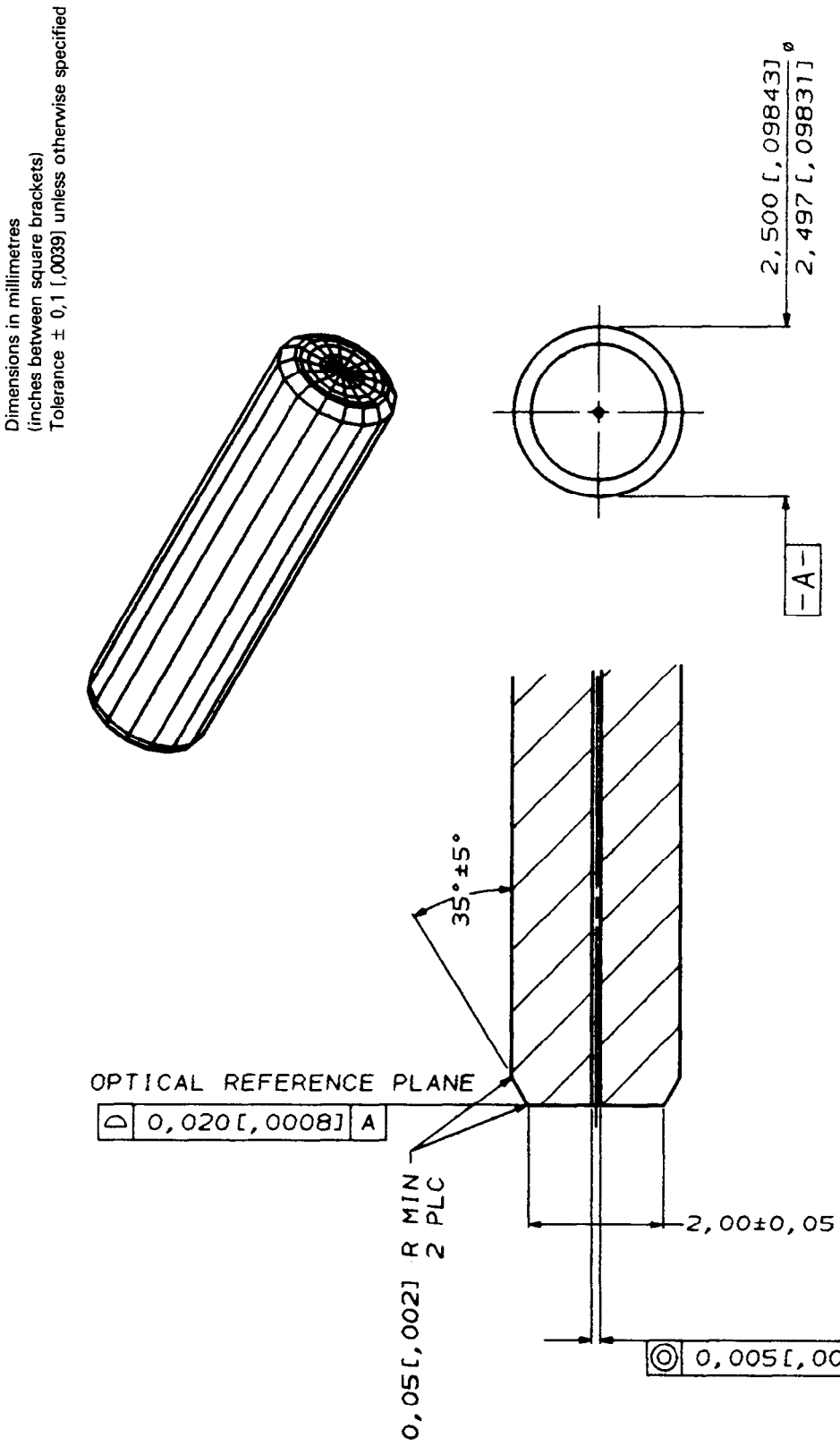

NOTE — Mic plug ferrule end shall seat to the optical reference plane with a static force of 0,68 kg [1,5 lb] min. to 1,36 kg [3,0 lb] max. per ferrule.

Figure 7 - MIC ferrule geometry

Provided by IHS under license with ISO
Copyright International Organization for Standardization
Not for Resale

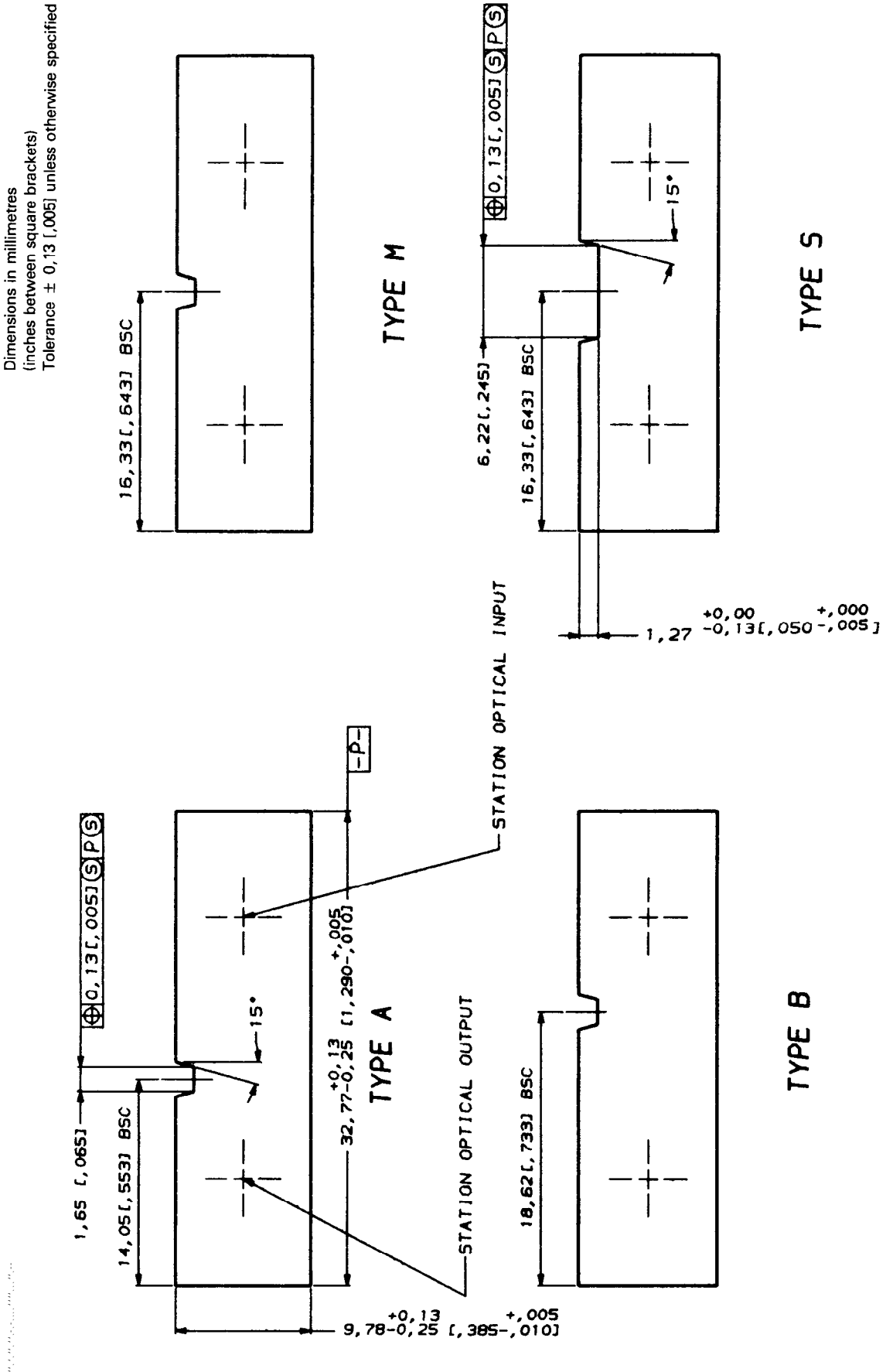

Figure 8 - Receptacle keying detail

Provided by IHS under license with ISO

Copyright International Organization for Standardization
Not for Resale

The MIC optical loss is not directly specified. Trade-offs between connector/fibre precision and source/detector performance (as well as other factors such as switch loss) are implementation issues. Imperfections in the MIC receptacle are included in the power and sensitivity requirements of the respective Station Attachment. Imperfections in the MIC plug are included in the cable plant loss (see clause 10).

7.2 MIC intermateability detail

Figures 5 and 6 show the intermateability details for two conforming MIC receptacles. The choice between these two MIC receptacles is optional. The MIC in figure 5 is primarily intended for applications where the MIC receptacle is mounted with the opto-electronic components used in a particular implementation of the Active Input and Output Interfaces. The MIC in figure 6 is intended for applications where the MIC receptacle is separated from the active opto-electronic components. It is also useful for cable-to-cable applications.

7.2.1 MIC ferrule

The MIC receptacle shall accommodate a ferrule as shown in figure 7. Other ferrules compatible with the 2,00-mm-diameter ferrule stop at the reference plane are allowed.

7.2.2 Keying detail

Figure 8 shows the keying requirements for the MIC receptacle. When viewing the MIC receptacle with the keying on top, the left ferrule shall be the station optical output port. The right ferrule shall be the station optical input port.

8 Media signal interface

This clause defines the interfaces of the optical signal at the interconnect receptacles shown in figure 3. Each conforming FDDI attachment shall be compatible with this optical interface to allow interoperability within an FDDI environment. The parameters specified in this clause are based on a requirement that the bit error rate contributed by the repetition through an FDDI attachment shall not exceed a bit error rate of $2,5 \times 10^{-10}$ under all conditions of clause 8, including the minimum Active Input Interface power level. In addition, the FDDI attachment shall not exceed a bit error rate of 1×10^{-12} when the Active Input Interface power level is 2,0 dB or more above the minimum level.

FDDI can operate with a variety of optical fibre sizes, i.e., 50/125 μm, 62,5/125 μm, 85/125 μm, and 100/140 μm fibre. However, the active input and output specifications contained in this clause are based on the use of 62,5/125-μm fibre as defined in clause 10. For the use of other permitted fibre sizes (e.g., 50/125 μm) reference the information contained in annex C.

8.1 Active output interface

The Active Output Interface shall exhibit the characteristics shown in table 1.

8.1.1 Spectral width

Figure 9 shows the maximum allowed source spectral width as a function of source centre wavelength for various source rise and fall times. These specifications in conjunction with the fibre's chromatic dispersion and modal bandwidth parameters given in clause 10 result in an optical rise time of less than 5,0 ns exiting a 2-km fibre cable. Curves are shown for source rise and fall times ranging from 1,5 ns to 3,5 ns.

Provided by IHS under license with ISO
Copyright International Organization for Standardization
Not for Resale
No reproduction or networking permitted without license from IHS

Table 1 - Characteristics of active output interface

Characteristic	Minimum	Maximum	Unit
Centre wavelength	1 270	1 380	nm
Average power (Note 1)	-20,0	-14,0	dBm
Rise time (10 % to 90 %)	0,6	3,5	ns
Fall time (90 % to 10 %)	0,6	3,5	ns
Duty cycle distortion, peak-peak	0,0	1,0	ns
Data dependent jitter, peak-peak (Note 2)	0,0	0,6	ns
Random jitter, peak-peak (Note 3)	0,0	0,76	ns
Extinction ratio	0,0	10,0	%

NOTES

1 Average optical output power shall be measured using a Precision Test Fibre/Precision Test Connector Plug (see annex B). The data pattern for this measurement shall be a stream of Halt symbols.

2 Data dependent jitter is specified for the test data pattern specified in annex A. Annex A also provides possible test methods.

3 Random jitter is specified as the peak-peak value where the probability of exceeding that value is equal to $2,5 \times 10^{-10}$. For a Gaussian probability distribution, the specified peak-peak value is equal to 12,6 times the rms value.

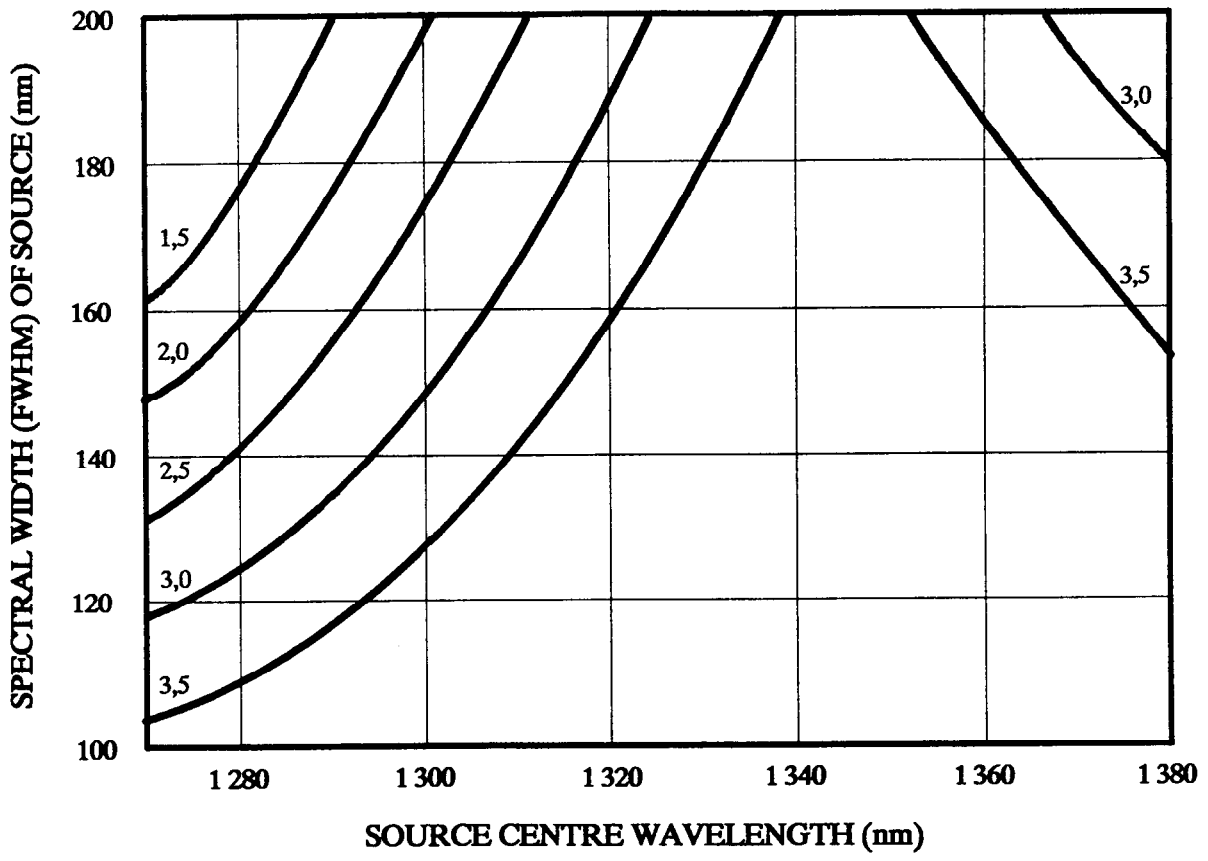

Figure 9 - Source spectral width and centre wavelength requirements

Provided by IHS under license with ISO

Copyright International Organization for Standardization
Not for Resale

8.1.2 Pulse envelope

The output optical pulse shape, when measured through the Precision Test Fibre, shall fit within the boundaries of the pulse envelope in figures 10 and 11.

For rise and fall time measurements, the maximum positive and minimum negative waveform excursions in the zero and 100 % time intervals shall be centred around the 0,0 and 1,0 levels, respectively. Figure 10 also reflects the possibility of prebiasing if it exists but this is not required. A minimum bandwidth range of 100 kHz to 750 MHz is required for the measurement equipment used to evaluate the pulse envelope shown in figures 10 and 11.

No reproduction or networking permitted without License from IHS

8.2 Active input interface

The Active Input Interface shall operate when provided with a signal having the characteristics summarized in table 2.

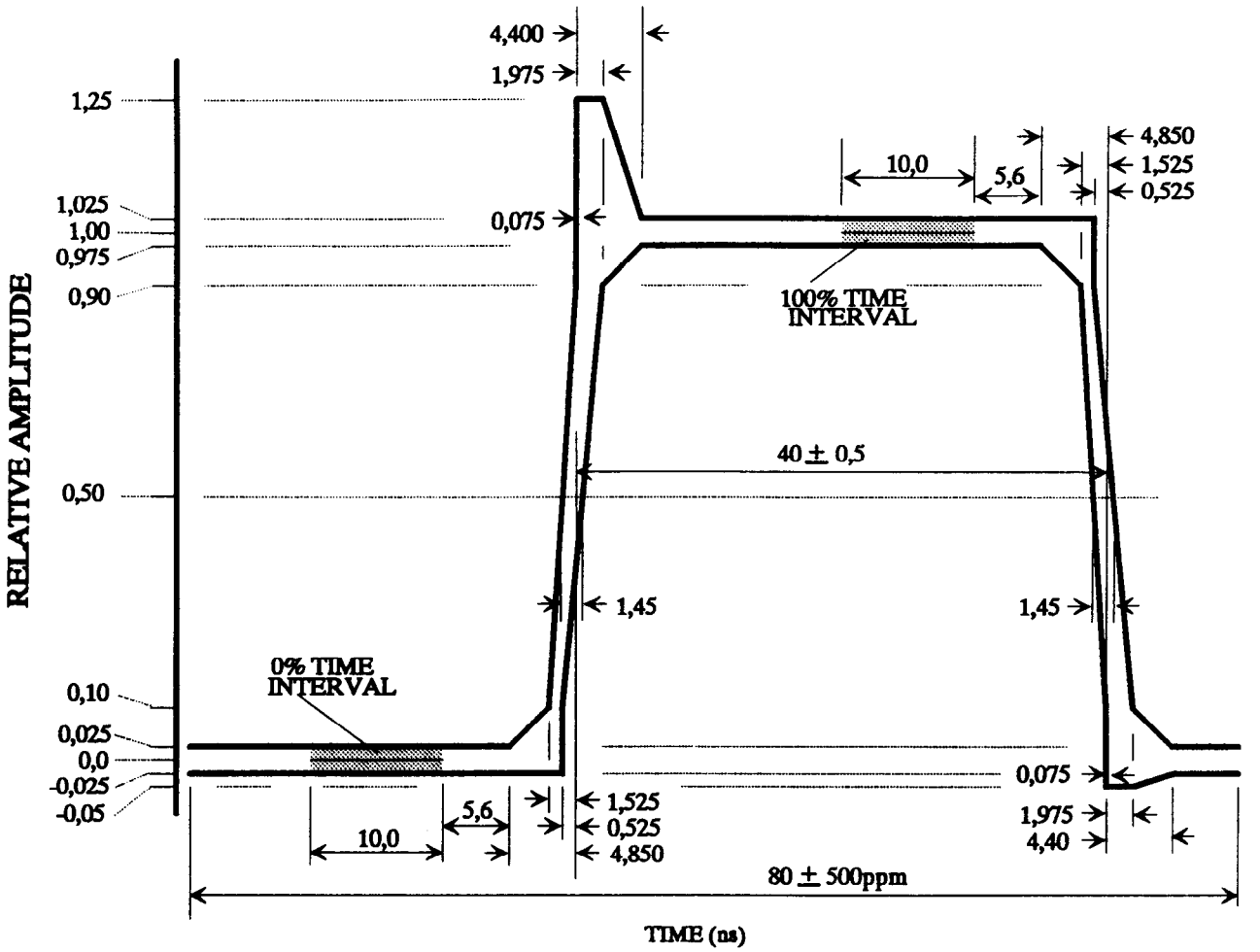

Figure 10 - Pulse envelope

Provided by IHS under license with ISO
Copyright International Organization for Standardization
Not for Resale

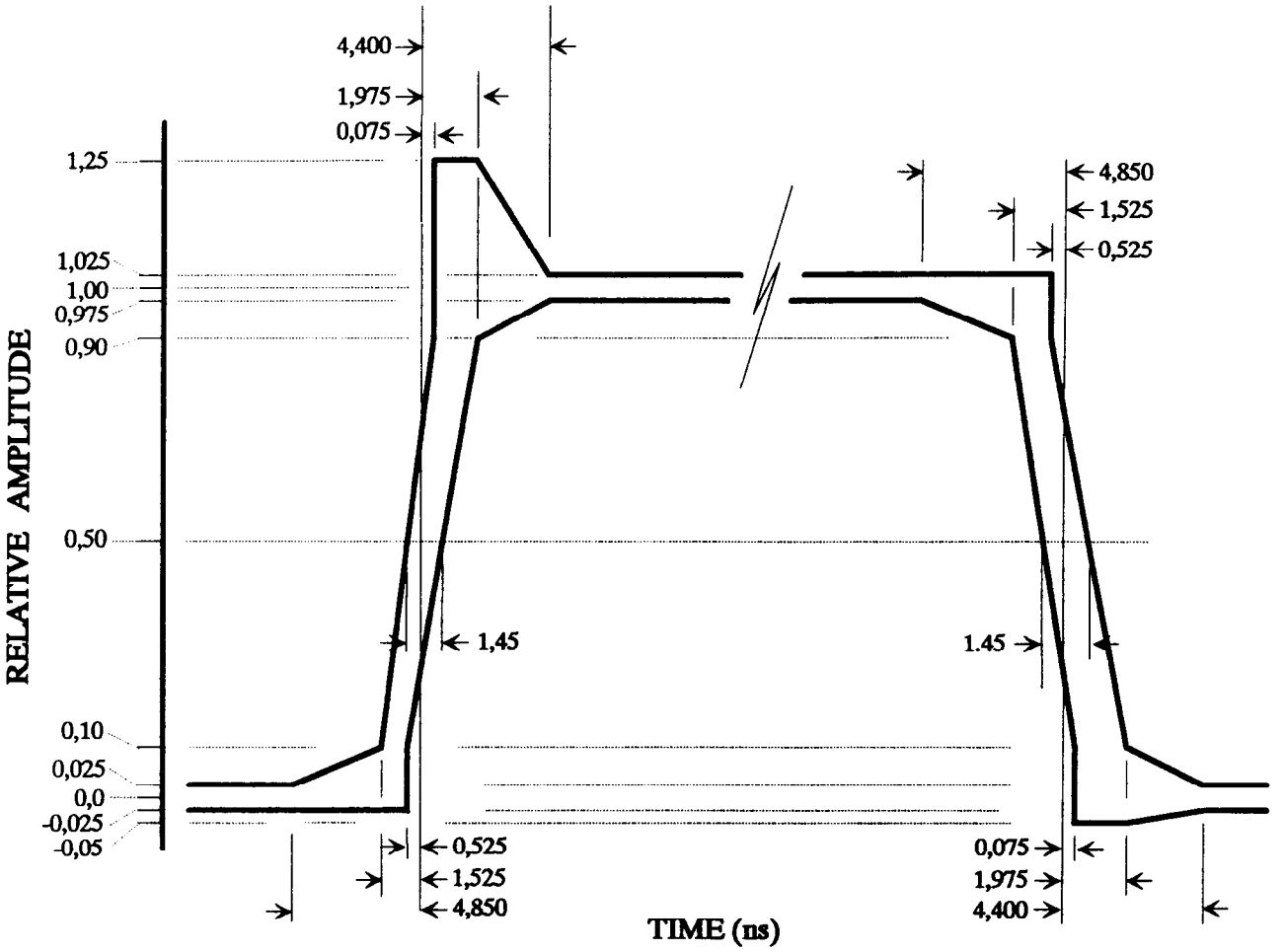

Figure 11 - Expanded pulse envelope

8.3 Station bypass interface

The bypass function is optional for any station. In the bypassed mode, the in-bound medium is connected to the out-bound medium and the output of the optical transmitter is looped back to the input to the optical receiver. When the station's power is off, then the station shall be in the bypassed mode. The timing relationships for making the transition from bypassed to inserted, or from inserted to bypassed, shall be as shown in figure 12. Additional characteristics are shown in table 3.

8.4 Station bypass timing definitions

T_{os} = Optical switching speed.
The amount of time it takes an output fibre to switch between two input fibres. The start of T_{os} is defined as the moment when the optical power first falls 1,5 dB below the power level from the initial source. T_{os} ends when the optical power settles within -1,5 dB of the signal from the final source.

Copyright International Organization for Standardization
Not for Resale

Provided by IHS under license with ISO

Table 2 - Characteristics of active input interface

Characteristic	Minimum	Maximum	Unit
Centre wavelength	1 270	1 380	nm
Average power (Note 1)	-31,0	-14,0	dBm
Rise time (10 % to 90 %)	0,6	5,0	ns
Fall time (90 % to 10 %)	0,6	5,0	ns
Duty cycle distortion, peak-peak	0,0	1,0	ns
Data dependent jitter, peak-peak (Note 2)	0,0	1,2	ns
Random jitter, peak-peak (Note 3)	0,0	0,76	ns

NOTES
1 Average optical output power shall be measured using a Precision Test Fibre/Precision Test Connector Plug (see annex B). The data pattern for this measurement shall be a stream of Halt symbols.
2 Data dependent jitter is specified for the test data pattern specified in annex A. Annex A also provides possible test methods.
3 Random jitter is specified as the peak-peak value where the probability of exceeding that value is equal to $2,5 \times 10^{-10}$. For a Gaussian probability distribution, the specified peak-peak value is equal to 12,6 times the rms value.

No reproduction or networking permitted without license from IHS

Table 3 - Characteristics of station bypass interface

Characteristic	Test Per	Minimum	Maximum	Unit
Attenuation (In-bound to out-bound)	FOTP-34	0,0	2,5	dB
Interchannel isolation	FOTP-42	40,0	N/A	dB
Switching time (Tsi)	---	N/A	25,0	ms
Media interruption (Tmi)	---	N/A	15,0	ms

T_{DD} = Difference delay time.
The absolute difference in delay switching times between the primary and secondary switches. The delay difference is measured at the -1,5 dB points from the final source level.

T_{MI} = Media interruption time.
T_{MI} is equal to the sum of T_{OS} and T_{DD}. T_{MI} is the amount of time the optical primary or secondary signal is interrupted during the insertion or deinsertion of an optical switch. Only T_{MI} is limited which allows trade-offs between T_{OS} and T_{DD}. T_{MI} shall not exceed 15,0 ms.

T_{SI} = Switching insertion/deinsertion time.
The time from when the optical switch is inserted or deinserted to when the optical signal rises to within -1,5 dB of its final value from a source. T_{SI} is the amount of time a station shall wait after going into the bypass mode before it may reconfigure. This parameter is measured from the 50 % electrical level to the -1,5 dB optical level. T_{SI} shall not exceed 25,0 ms.

Copyright International Organization for Standardization
Not for Resale
Provided by IHS under license with ISO

I_Max = Maximum switching insertion/deinsertion time.
I_Max is the maximum value of T_{SI} that is allowed for the station. The default value of I_Max is 25,0 ms.

MI_Max = Maximum media interruption time.
MI_Max is the maximum value of T_{MI} that is allowed for the station. The default value of MI_Max is 15,0 ms.

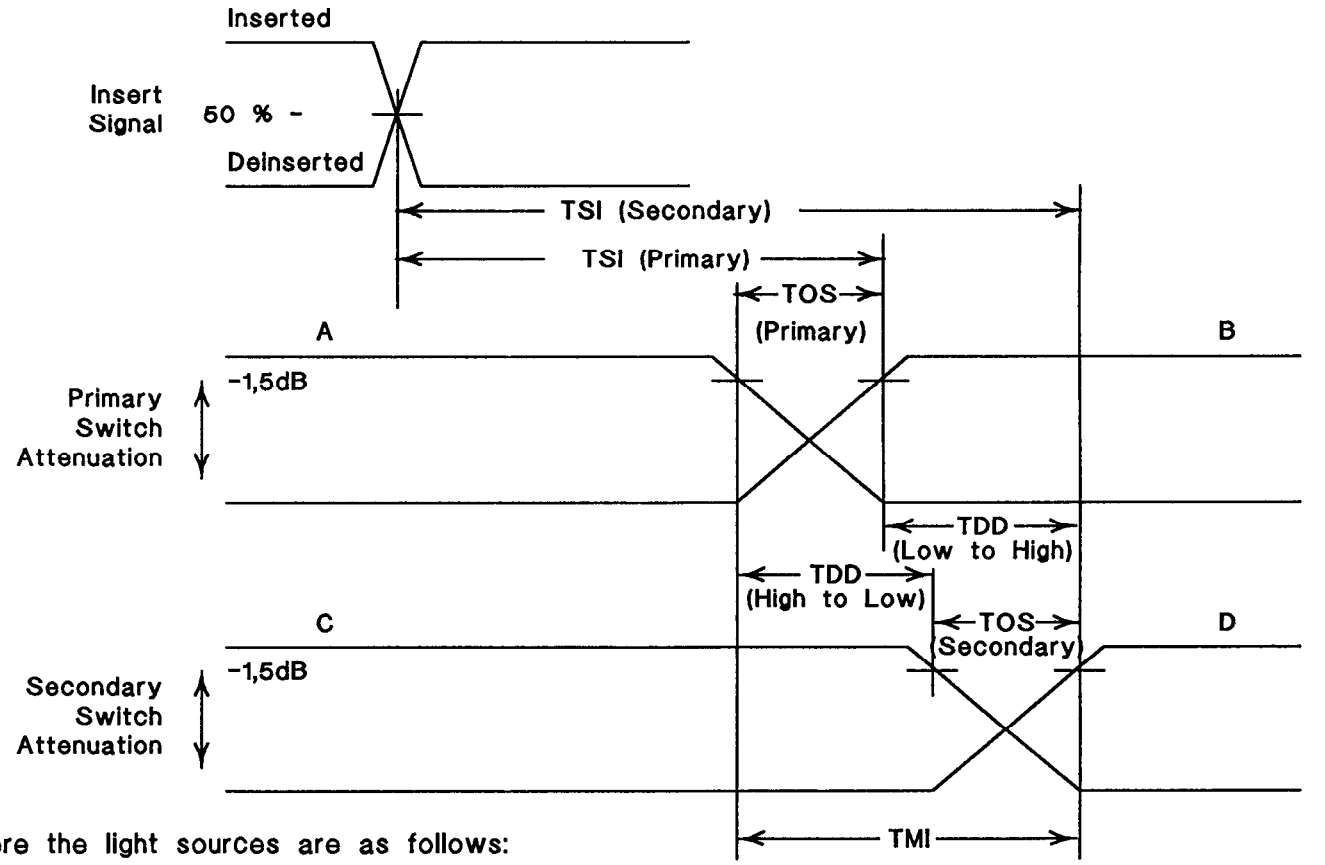

Where the light sources are as follows:

(Inserting/Deinserting)

A - Initial MIC PO light source = (MIC PI/Transmitter PO)
B - Final MIC PO light source = (Transmitter PO/MIC PI)
C - Initial MIC SO light source = (MIC SI/Transmitter SO)
D - Final MIC SO light source = (Transmitter SO/MIC SI)

Figure 12 - Station bypass timing characteristics

No reproduction or networking permitted without license from IHS

Provided by IHS under license with ISO

Copyright International Organization for Standardization
Not for Resale

9 Interface signals

This clause defines the interface of the signals between PMD and SMT and also between PMD and PHY. Each conforming FDDI attachment shall be compatible with this interface to allow interoperability within an FDDI environment. Conforming implementations may employ any design technique that does not violate interoperability.

The optical power levels referenced in this clause relate to the Active Input Interface and the Active Output Interface.

9.1 Optical receiver

The optical receiver transforms the incoming optical signal to an equivalent (electrical) signal that is presented to PHY. A Signal_Detect parameter shall be presented to PHY to indicate the presence or absence of an optical signal. The data outputs of the receiver are related to the Signal_Detect parameter and are described below.

9.1.1 Signal_Detect

Signal_Detect indicates the presence of an optical signal with sufficient quality to correctly identify a Line-State. It is characterized by the threshold levels that it changes state on, by the hysteresis between these levels, and by the timing of the Signal_Detect output relative to the receiver data outputs.

9.1.1.1 Signal_Detect thresholds and hysteresis

For Signal_Detect to be asserted, the Bit Error Rate (BER) of the receiver outputs shall be less than 0,01. Signal_Detect shall be asserted for any power level of -31,0 dBm or higher. The minimum allowed power level for deassertion shall be the power which gives a 0,01 BER on the receiver outputs or -45,0 dBm, whichever is greater. The minimum allowed hysteresis between the assertion and deassertion levels shall be 1,5 dB. Figure 13 illustrates these requirements.

9.1.1.2 Signal_Detect timing requirements on assertion

The Signal_Detect output shall be asserted within 100 μs after a step increase in the optical power into the receiver ranging from a minimum of the hysteresis step to a maximum defined by STEPmax = -14 dBm -Pd. Moreover, the receiver data outputs shall reflect a BER of less than 0,01 as measured in an LS_Max interval after the assertion of Signal_Detect. The data pattern of the incoming optical signal stream may be any valid symbol stream.

NOTE - LS_Max = 15,0 μs is defined in ISO/IEC 9314-1, the FDDI standard on PHY.

AS_Max = Maximum acquisition time (signal).
AS_Max is the maximum Signal_Detect assertion time for the station.
AS_Max shall not exceed 100,0 μs. The default value of AS_Max is 100,0 μs.

9.1.1.3 Signal_Detect timing requirements on deassertion

The Signal_Detect output shall be deasserted within a maximum of 350,0 μs after a step decrease in the optical power from a power level which is the lower of the following two numbers:

-31,0 dBm, or Pd + 4,0 dB; where, Pd = Power Level for deassertion

Provided by IHS under license with ISO
Copyright International Organization for Standardization
Not for Resale
No reproduction or networking permitted without license from IHS

to a power level of -45,0 dBm or less. This step decrease in the power level shall have occurred in less than 8 ns. The receiver output shall reflect, with a BER of 0,01 or less for a period of 12,0 μs or until Signal_Detect is deasserted, an input data stream consisting of Quiet symbols. Signal_Detect shall also be deasserted within a maximum of 350,0 μs after the BER of the receiver outputs degrades below 0,01 for an optical input data stream that decays with a negative ramp function instead of a step function.

ANS_Max = Maximum acquisition time (no signal).
ANS_Max is the maximum Signal_Detect deassertion time for a station. ANS_Max shall not exceed 350,0 μs. The default value of ANS_Max is 350,0 μs.

A summary of assertion and deassertion requirements is provided in table 4.

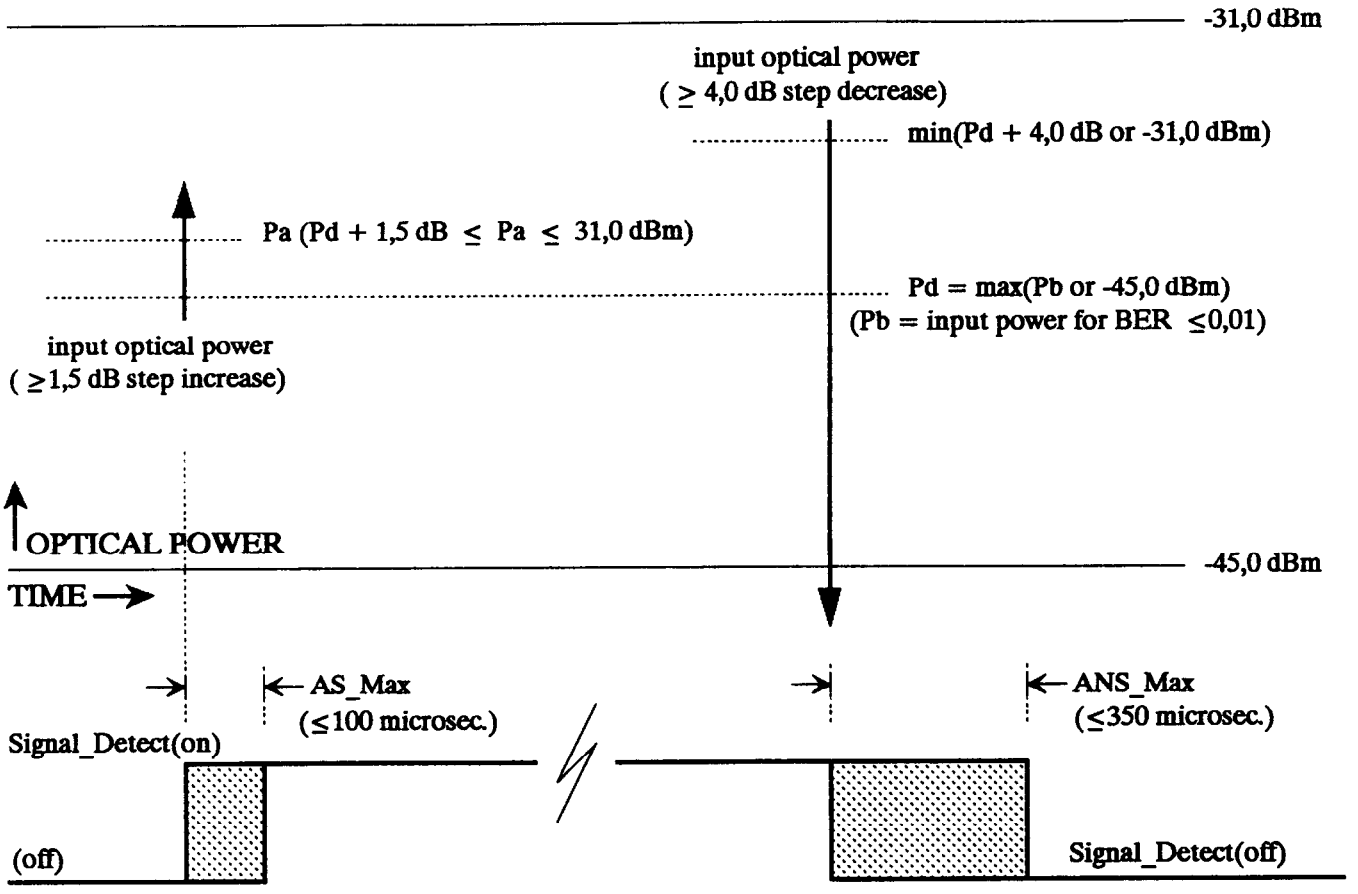

Figure 13 - Signal detect thresholds and timing

Provided by IHS under license with ISO
Copyright International Organization for Standardization
Not for Resale

Table 4 - Summary of assertion and deassertion requirements

Requirement	Minimum	Maximum
Assert time	---	100,0 μs
Deassert time	---	350,0 μs
Assert power (Pa)	Pd + 1,5 dB	-31,0 dBm
Deassert power (Pd)	-45,0 dBm, or Pb*	---
Hysteresis	1,5 dB	---

* Whichever power is the higher, where Pb is the power level into the active input which yields a BER of 0,01 or less.

9.2 Optical transmitter

PMD shall provide a service to SMT called SM_PM_CONTROL.request. When SMT passes a Control_Action parameter of Transmit_Disable, the optical output of the transmitter shall transition to the logic zero state independent of the PM_UNITDATA.request primitive and its output shall have an average optical power level of less than -45,0 dBm. When SMT passes a Control_Action parameter of Transmit_Enable, the transmitter optical output shall transmit the current PM_Request (NRZI code) value of the PM_UNITDATA.request primitive. The optical transmitter shall respond to the Control_Action parameter within 1,0 μs after receipt of the parameter.

10 Cable plant interface specification

This clause defines the network requirements for an FDDI fibre optic cable plant. The term "cable plant" encompasses all the fibre optic components between any two communicating stations and the associated "station-to-network" connector plug at each end, as shown in figure 15. The requirements specified herein apply to both dual and single attachments.

Performance in accordance with this part of ISO/IEC 9314 shall be met by following procedures as specified in annex B or other similar test procedures. The test signal may be transmitted from either end of the cable plant.

10.1 Cable plant specification

The specifications in this clause are intended to assure interoperability of FDDI conforming attachments for optical cable lengths up to 2 km.

10.1.1 Fibre types

The requirements of clause 8 are specified in terms of 62,5/125 μm fibre as shown in table 5. However, other fibre sizes may also be used. See annex C for data to aid in their use in an FDDI implementation.

10.1.2 Bandwidth and attenuation values

The bandwidth and attenuation values provided in table 6 are based on a nominal source wavelength of 1 300 nm and the use of 62,5/125 μm fibre. See annex C for data to aid in calculating the maximum cable plant attenuation allowed for the use of other permitted fibre sizes.

Provided by IHS under license with ISO
Copyright International Organization for Standardization
Not for Resale

10.1.2.1 Attenuation

The attenuation shown in the table reflects the end-to-end insertion loss which includes cable attenuation and the loss of other components such as splices, connectors, switches, and the like.

10.1.2.2 Fibre chromatic dispersion parameters

Figure 14 illustrates the required zero dispersion wavelength and the dispersion slope values for all fibre sizes.

Sufficient optical bandwidth is provided when the zero dispersion wavelength and the dispersion slope measured at the zero dispersion wavelength (as defined by EIA-455-168, EIA-455-169, and EIA-455-175) fall within the highlighted area.

These modal bandwidth and chromatic dispersion requirements in conjunction with the specifications on the centre wavelength, spectral width, and rise times of the transmitter in the Active Output Interface specification in 8.1 assure a 5-ns exit response time over 2 km of fibre.

Table 5 - Suggested fibre for a cable plant

Nominal Core Diameter EIA-455-58	Cladding Diameter EIA-455-27 or EIA-455-48		Nominal Numerical Aperture EIA-455-177
	Minimum	Maximum	
62,5 µm	122,0 µm	128,0 µm	0,275

Table 6 - Bandwidth and attenuation values

Value	Test Per	Minimum	Maximum	Units
Modal bandwidth (-3 dB optical)	EIA-455-30 or EIA-455-51 with EIA-455-54	500,0*	---	MHz·km
Attenuation	EIA-455-53**	0,0	11,0	dB

NOTES
* Some users may wish to install higher modal bandwidth fibre to facilitate future use of the cable plant for higher bandwidth applications.
** As modified with the use of a Precision Test Fibre (see annex B).

10.2 Bypassing

A property of the cable plant is the method of bypassing chosen in the application. The loss and bandwidth limits given above apply to the plant in the worst case bypassed configuration. This may mean that part of the cable plant loss is allocated to optical bypass switch loss

Provided by IHS under license with ISO
Copyright International Organization for Standardization
Not for Resale

contained in an FDDI node when several FDDI segments are concatenated. See annex C for information on bypassing losses.

10.3 Connectors and splices

The MIC plug for connection to an FDDI node shall be compatible with the requirements specified in clause 7, Media Attachment. Losses of the MIC receptacles with precision mating plugs shall be included in the active output and input interface power specifications of 8.1 and 8.2. Additional losses of a non-precision plug shall be included as part of the cable plant loss.

Connectors and splices of any nature are allowed inside the cable plant. The number and quality of connections affect the loss of the cable plant and represent a design trade-off outside the scope of this part of ISO/IEC 9314.

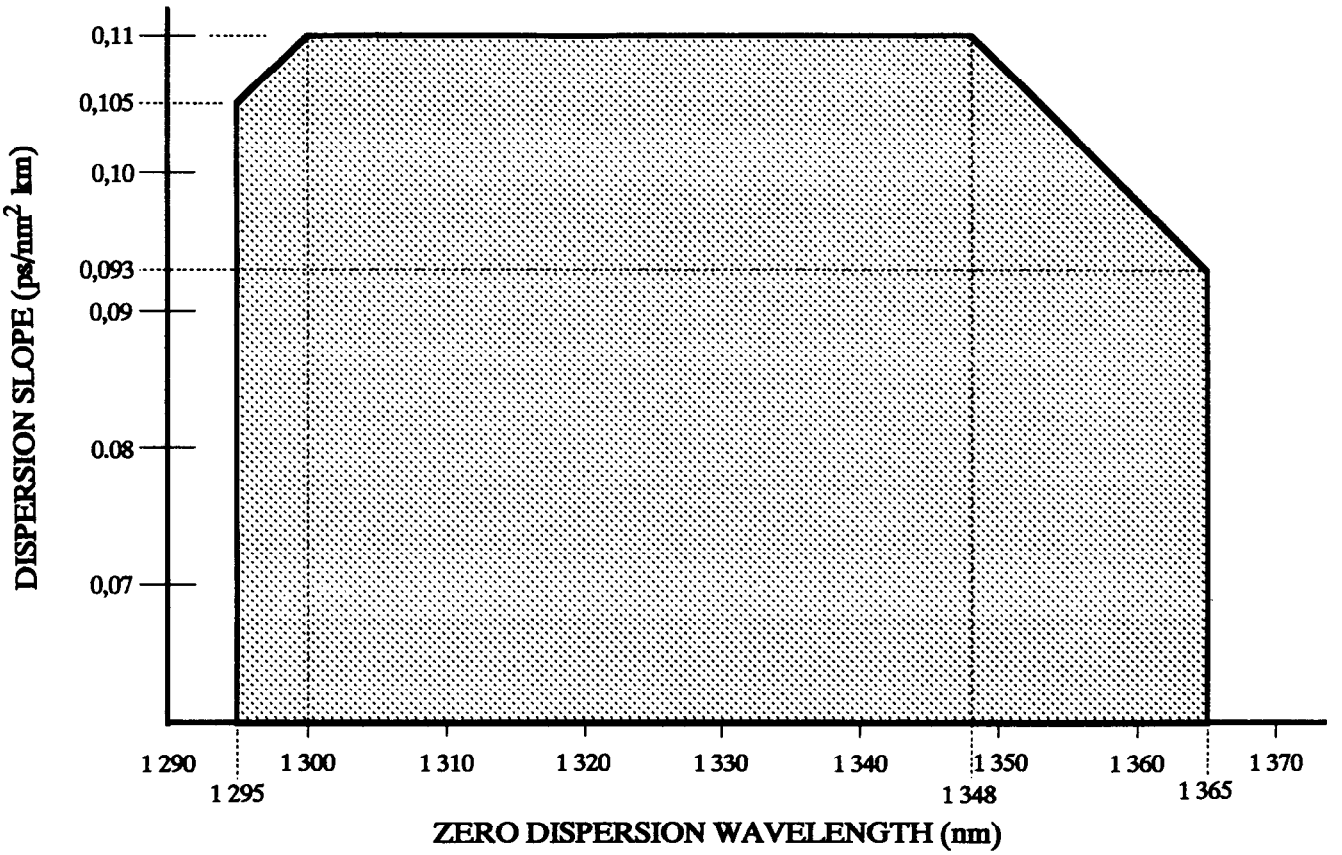

Figure 14 - Minimum dispersion wavelength and slope limits

Provided by IHS under license with ISO
Copyright International Organization for Standardization
Not for Resale

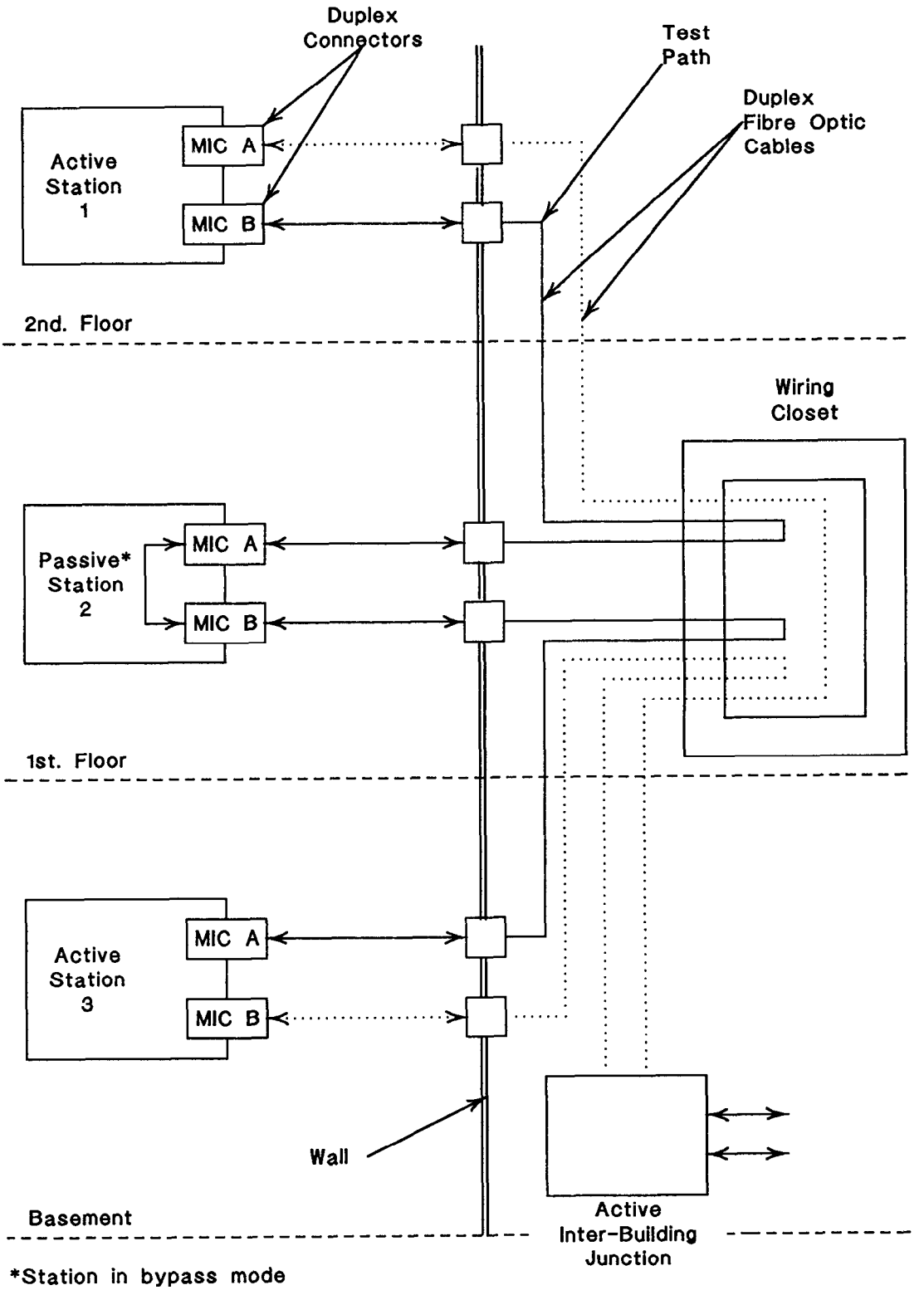

Figure 15 - Cable plant example

Provided by IHS under license with ISO
Copyright International Organization for Standardization
Not for Resale

Annex A

(informative)

Test methods

This annex defines terms, measurement techniques, and conditions for testing jitter and rise/fall time. This annex deals with issues specific to FDDI and is not intended to supplant standard test procedures given in this part of ISO/IEC 9314. This annex directly applies to verifying station performance related to the Optical Interface Specifications.

These same procedures may be used to measure a single component of the system. Component performance is outside the scope of FDDI compliance but it is useful from a design viewpoint. Annex E provides exemplary information on how to interpret component measurements.

A.1 Active output interface

A.1.1 Optical power measurement

Subclause 8.1, the Active Output Interface, specifies the average optical power launched into a 62,5-μm-core graded index fibre conforming to 10.1. The output power should be measured using a calibrated power meter and with the station transmitting a stream of Halt symbols. This pattern corresponds to using a 12,5-MHz square wave test signal.

For precision measurements, the optical coupling between the station MIC receptacle and the optical power meter should be made using a Precision Test Fibre and Test Connector Assembly. Care should be exercised to ensure that the optical power meter is properly calibrated over the optical spectrum of the source. For the parameters of the Precision Test Fibre/Ferrule see annex B.

A.1.2 Optical spectrum measurement

The centre wavelength and spectral width (FWHM) of the Active Output Interface are measured using an optical spectrum analyzer. The patch cable used to couple the light from the Active Output Interface to the spectrum analyzer should be short to minimize spectral filtering by the patch cable. The output signal during the measurement should be a stream of Halt symbols.

A.1.3 Rise/fall response time measurement

Active Output Interface rise/fall response times should be measured between the 10 % and 90 % optical power points using a wide bandwidth opto-electronic receiver and an oscilloscope. The output signal during the measurement should be a stream of Halt symbols. The optical waveform should fit within the boundaries of the template in figures 10 and 11. It is important that the frequency response and gain flatness of the opto-electronic measurement system be wide and flat enough to yield accurate optical rise and fall times. A minimum frequency response of 100 kHz to 750 MHz is required.

A.1.4 Jitter measurements

The Active Output Interface jitter specifications apply in the context of a 2,5 x 10^{-10} Bit Error Rate (BER). Jitter may be measured with an oscilloscope or a Bit Error Rate Tester (BERT) as described in clauses A.3 and A.4. The station should be transmitting the pattern given in clause A.5 when Data Dependent Jitter (DDJ) is measured. A stream of Idle symbols should be transmitted when Random Jitter (RJ) and Duty Cycle Distortion (DCD) are measured.

Provided by IHS under license with ISO
Copyright International Organization for Standardization
Not for Resale
No reproduction or networking permitted without license from IHS

With the exception of DCD, jitter is difficult to measure accurately on an oscilloscope. The oscilloscope procedure is illustrative, but often underestimates the actual amount of jitter. In case of doubt, the BERT test procedure should be used to verify the limits of the jitter.

A.1.5 Extinction ratio

The Active Output Interface Extinction Ratio is a measure of the modulation depth of the optical waveform exiting the station. The output signal during the measurement should be a stream of Halt symbols.

The measurement may be made with a dc coupled wideband opto-electronic receiver that linearly converts optical power to voltage. The extinction ratio is the ratio of voltage corresponding to the 0 % level (low light) to the voltage corresponding to the 100 % (high light) level and should be measured using a stream of Halt symbols. It is important that the receiver's frequency response, gain flatness and linearity over the range of optical power being measured be sufficient to provide accurate measurement of the 0 % and 100 % levels.

A.2 Active Input Interface

The rise/fall times, jitter, and average power ranges specified in 8.2 apply to the DDJ test pattern and define the optical test signal for the Active Input Interface. A compliant station should receive the test signal over the range of conditions specified with a frame error rate that corresponds to a BER less than or equal to $2,5 \times 10^{-10}$. The requirements in clause 8 were written in terms of BER to facilitate the specification of components to be used in a particular implementation.

The source of the Active Input Interface test signal should be any optical source conforming to the specifications in 8.2. It should transmit the DDJ test pattern given in clause A.5. The FDDI PHY document provides a description of both the coding scheme and the allowed test signal base frequency variations.

The rise/fall times and jitter of the test signal may be varied by having the source of the pattern transmit through longer than normal lengths of cable. Lower modal bandwidth cable may also be used to increase the rise/fall times and jitter. If forced to choose between the correct DDJ or rise/fall times, then an adjustment should be made to achieve the correct DDJ. The DCD of the DDJ test pattern should be adjusted electrically at the test signal source because cable length and modal bandwidth variations do not increase DCD.

The worst case DDJ test signal may require that the cable be longer than actually allowed in FDDI physical links.

The average power of the DDJ test pattern may be adjusted with a variable optical attenuator. A high power source may be needed to verify the dynamic range of the Active Input Interface.

The rise/fall times and jitter of the DDJ test signal may be measured with the methods described in clauses A.1, A.3, and A.4. Components used in a particular implementation may also be measured with these methods.

A.3 Distortion and jitter contributions

DCD and jitter are measured as the deviation from the ideal time position of the signal at the 50 % point of the signal. The 50 % point is identified as the zero crossing of the ac coupled signal. The zero level is established in absence of the signal.

Provided by IHS under license with ISO
Copyright International Organization for Standardization
Not for Resale

There are three types of jitter used in the PMD specifications. The definitions are given below and the test methods are given in clause A.4.

(a) Duty Cycle Distortion (DCD): DCD is often caused by propagation delay differences for low-to-high and high-to-low transitions. DCD is the deviation of the measured symbol duration from the nominal 8,000 ns width. It is measured on a continuous stream of idle symbols (i.e., a 62,5-MHz square wave).

(b) Data Dependent Jitter (DDJ): DDJ is related to the transmitted symbol sequence. It is caused by the limited bandwidth characteristics of the optical channel components. DDJ results from non-ideal individual pulse responses and variation in the average value of the encoded pulse sequence which may cause base-line wander and possible change to the sampling threshold level in the receiver.

DDJ should be measured using the pattern described in clause A.5. DDJ is often seen in combination with other types of jitter. It is possible to measure the effects of DDJ without the effect of random jitter by working 4 dB to 6 dB above any random noise-related limit, however, the associated probability of jitter should then be $1,0 \times 10^{-12}$.

(c) Random Jitter (RJ): RJ is primarily due to thermal noise contributed in the optical receiver. RJ is modelled as a Gaussian process. RJ should average to zero. It should be characterized by the peak value at a $2,5 \times 10^{-10}$ probability. RJ should be measured using a stream of idle symbols. In this case DCD is easily separated out and the measured jitter should only consist of RJ.

A.4 Distortion and jitter measurement

A.4.1 DCD measurement

The opto-electronic measurement system described in A.1.3 should be used to measure DCD using a stream of idle symbols (i.e., a continuous 62,5-MHz square wave). The widths of the high and low state levels of the waveform should be measured at the 50 % amplitude point.

DCD(ns) = 0,5((width of wider state) - (width of narrower state))

A.4.2 RJ and DDJ measurement

There are two methods for measuring jitter: the oscilloscope method and the BERT method. The BERT method is more accurate than the oscilloscope method, but requires access to the clock signal used to create the data pattern. The BERT method may be used to test an FDDI station's Active Output Interface and to measure the jitter of the signal used to test an Active Input Interface. The BERT method may also be used to measure the jitter of components being used in a particular implementation of the Active Input and Output Interfaces.

A.4.2.1 Oscilloscope method

An eye pattern waveform is displayed on the screen of an oscilloscope. Jitter is measured as the width of the zero crossings of the eye pattern. Since jitter is measured at an associated probability, and since oscilloscopes usually do not display events having a low probability of occurrence, the oscilloscope method may not accurately measure peak-to-peak jitter at a probability of $2,5 \times 10^{-10}$ or less.

Provided by IHS under license with ISO
Copyright International Organization for Standardization
Not for Resale

A.4.2.2 BERT method

The BERT jitter measurement method compares an unjittered waveform with a jittered waveform on a bit-by-bit basis and calculates the BER. The decision point for the comparison (the clock) is varied over the interval:

$$T_o - T_b/2 < T_d < {}_o + T_b/2$$

where

T_o is the optimal decision point (centre of eye diagram);
T_b is the bit period, 8,000 ns;
T_d is the decision point.

For each position of T_d, a BER measurement is taken giving the probability of jitter occurring at that T_d position. In effect, the test moves along the zero crossing line of the eye pattern, measuring the probability of the occurrence of jitter at each point in the eye. The range of T_d values that result in a BER less than or equal to $2,5 \times 10^{-10}$ gives the window (W__jf) in the eye that does not have jitter of this probability. The peak-to-peak jitter in the waveform is therefore:

$$\text{Jitter} = T_b - W__jf$$

In practice, a BER test set is used to make the bit-by-bit comparison, to increment the error count, and to calculate the measured BER. The clock, or decision point, is moved across the eye pattern. When testing for compliance to the Active Output Interface specifications, the clock may be extracted from the optical signal exiting the station. It is important that the jitter of the test receiver used to measure the Active Output jitter be low enough to measure the jitter contributed by the station. Component test beds and Active Input Interface test signal generators provide direct access to a suitable clock source to use in the BERT test method.

The BERT method may be used to measure both RJ and DDJ. DCD is usually subtracted from a measurement because it is easy to measure separately. A stream of Idle symbols is used to measure RJ. The DDJ test pattern is used for DDJ measurements. DDJ and RJ may be separated as described in clause A.3.

A common practice used to save time is to measure the jitter at higher probabilities (e.g., $1,0 \times 10^{-8}$) and then extrapolate to the jitter width at a $2,5 \times 10^{-10}$ probability.

A.5 DDJ test pattern for jitter measurements

The symbol pattern provided below is used for testing FDDI components or physical links for DDJ. The symbols used in this pattern are defined in ISO 9314-1.

The pattern is 256 symbols long (1 280 bits) and is transmitted continuously during the test by repeating it. When 4B/5B NRZI encoded, this sequence causes a near worst case condition for inter-symbol interference and duty-cycle base-line wander of 50 kHz.

When the pattern is used to test Active Input and Output Interface specifications, it is suggested that an implementer replace line 1 with a copy of line 3, line 9 with a copy of line 6, line 11 with a copy of line 13, and line 16 with a copy of line 8. Multiple copies of the resulting pattern constituting a maximum length information field of a frame may then be encased in appropriate MAC headers and trailers for transmission by a station as a test frame. When the pattern is used to test the jitter introduced by a particular component, it may be used directly as follows.

No reproduction or networking permitted without License from IHS

Provided by IHS under license with ISO

Copyright International Organization for Standardization
Not for Resale

```
I,I,I,J,K,4,D,3,1,8,B,F,8,E,3,9
5,E,6,9,C,A,0,2,4,2,4,7,0,3,B,F
1,8,1,9,3,E,5,9,6,E,C,A,D,7,0,D
7,0,7,0,7,0,2,4,2,4,2,2,4,2,7,0

4,7,0,2,7,4,D,3,1,8,B,F,8,E,3,9
5,E,6,9,C,A,0,2,4,2,4,7,0,3,B,F
1,8,1,9,5,E,5,9,6,E,C,E,D,7,0,D
4,D,2,2,7,4,D,3,1,8,B,F,8,E,3,9

5,E,6,9,C,A,T,R,S,R,S,T,0,3,B,F
1,8,1,9,6,E,5,9,6,E,C,E,3,9,5,1
I,J,K,2,7,4,D,3,1,8,B,F,8,E,3,9
5,E,6,9,C,A,0,2,4,2,4,7,0,3,B,F

1,8,1,9,3,E,5,9,6,E,C,A,D,7,0,D
D,0,7,D,2,7,4,D,3,1,8,B,F,8,E,3
9,5,E,6,9,C,A,0,2,4,2,4,2,4,2,7
0,3,B,F,1,8,F,9,C,E,3,A,C,E,I,I
```

The implementer is reminded that the Active Interface requirements apply to any valid symbol sequence, and that Active Input Interface performance is dependent on the received symbol sequence. The FDDI coding format may result in symbol sequences that have a constant 40 % or 60 % duty cycle. Repetitive transmissions of maximum length frames of a single symbol may result in base-line wander frequencies as low as 1,38 kHz. An implementer may wish to verify Active Interface conformance using a maximum length frame of repeating "7" symbols.

No reproduction or networking permitted without license from IHS

Provided by IHS under license with ISO
Copyright International Organization for Standardization
Not for Resale

Annex B

(informative)

Optical test procedures

This annex is not intended to provide detailed optical test procedures but rather is intended as a directory of those standards organizations working to develop the procedures.

Fibre Optic Test Procedure (FOTP) standards are developed and published by the Electronics Industries Association (EIA) under the EIA-RS-455 series of standards. Copies may be obtained by writing to the address given below.

The Precision Test Fibre and Precision Test Connector mentioned in clause 8 have been under study by the EIA-FO-6.3.3 committee. As of the date of publication of this part of ISO/IEC 9314, this effort has not been successful in defining these precision components. Status reports and copies of any definitions that may have been achieved are available from the address given below. They are referenced by the committee's name (EIA-FO-6.3.3).

DIRECTOR OF TECHNICAL PROGRAMS
Information and Telecommunication Technologies

ELECTRONICS INDUSTRIES ASSOCIATION
2001 Eye Street, NW
Washington, DC 20006

Provided by IHS under license with ISO

Copyright International Organization for Standardization
Not for Resale

Annex C

(informative)

Alternative cable plant usage

C.1 Alternative fibre sizes

Table C.1 provides a listing of other fibre types that may be used in an FDDI system. These fibre types have not been studied and details for their use are not provided for in the main body of the specification. Therefore, using these fibre types may reduce the maximum achievable 2-km distance between stations.

Table C.1 - Alternative fibre types

Nominal Core Diameter EIA-455-58	Nominal Cladding Diameter EIA-455-27 or EIA-455-48	Nominal Numerical Aperture EIA-455-177
50 µm	125 µm	0,20
50 µm	125 µm	0,21
50 µm	125 µm	0,22
85 µm	125 µm	0,26
100 µm	140 µm	0,29

C.2 Theoretical connection losses

The theoretical connection losses shown in table C.2 indicate the intrinsic losses that might be encountered when mixing the various fibre types listed in 10.1 and clause C.1. Actual connection losses might differ from these values depending on the quality of the connector or splice, the tolerances of the particular fibres, and the location of the connection in the system.

Table C.2 - Theoretical connection losses for mixed fibre types

Receiving Fibre	Transmitting Fibre					
	50 µm (NA=0,20)	50 µm (NA=0,21)	50 µm (NA=0,22)	62,5 µm (NA=0,275)	85 µm (NA=0,26)	100 µm (NA=0,29)
50 µm (NA=0,20)	0,0	0,2	0,4	2,2	3,8	5,7
50 µm (NA=0,21)	0,0	0,0	0,2	1,9	3,5	5,3
50 µm (NA=0,22)	0,0	0,0	0,0	1,6	3,2	4,9
62,5 µm (NA=0,275)	0,0	0,0	0,0	0,0	1,0	2,3
85 µm (NA=0,26)	0,0	0,0	0,0	0,1	0,0	0,8
100 µm (NA=0,29)	0,0	0,0	0,0	0,0	0,0	0,0

NOTE All connection losses are shown in decibels.

Copyright International Organization for Standardization
Not for Resale

Provided by IHS under license with ISO

The body of the PMD references a single fibre type to facilitate interoperability and conformance testing; however other fibre types may also be used. The use of an alternate fibre type with a particular implementation may have the following consequences. At the Active Output Interface (AOI) more or less light may be launched into the fibre depending upon whether the launch optics are optimized for a core size and an NA that are smaller or larger than that of the alternate fibre size. At the Active Input Interface (AII) the sensitivity may be increased or decreased depending on the optimization of the collecting optics. Table C.3 summarizes the potential effects of the use of alternate fibre sizes as adjustments associated with the AOI and AII and provides the loss budget remaining for cable plant attenuation. All adjustments are relative to an implementation using 62,5 μm core fibre which has a loss budget of 11 dB for the cable plant. All of the alternate cable plant loss budgets allow 2-km transmission spans provided appropriate connectors and splices are used.

Table C.3 - Summary of loss budget remaining

Fibre type	AOI adjustment	AII adjustment	Loss budget remaining
50 μm (NA=0,20)	-5,0 dB	0,0 to 1,0 dB	6 to 7 dB
50 μm (NA=0,21)	-4,5 dB	0,0 to 1,0 dB	6,5 to 7,5 dB
50 μm (NA=0,22)	-4,0 dB	0,0 to 1,0 dB	7 to 8 dB
85 μm (NA=0,26)	2,0 dB	0,0 to -2,6 dB	10,4 to 13 dB
100 μm (NA=0,29)	2,0 dB	0,0 to -4,0 dB	9 to 13 dB

C.3 Optical bypass switches

Careful consideration should be given to the input launched power mode distribution when measuring optical bypass switch loss. Studies have shown that opto-mechanical type bypass switches have a tendency to strip the higher-order power modes. Thus, if the launched input power to the cable plant contained many higher-order modes, the switches succeeding the first switch might produce lower losses.

Provided by IHS under license with ISO

Copyright International Organization for Standardization
Not for Resale

Annex D

(informative)

Electrical interface considerations

This annex defines the electrical interface of the optical transmitters and receivers as shown in figures D.1 and D.2. This interface is intended to separate the development of components for PHY and PMD and thus it provides an interface that may be used for the verification of the conformance of FDDI MAC and PHY entities. It is not intended to provide an interface for the interconnection of conforming FDDI attachments.

For interconnection of conforming FDDI attachments, the true requirement for interoperability is at the optical fibre interface provided by each attachment. Therefore, the requirements specified in this annex need not be met if the optical interface supplied meets the applicable requirements as specified in clause 8.

In figures D.1 and D.2, RX+ and RX- form a differential input. They connect the Fibre Optic Receiver output to the Decode function input. The data is transferred as an NRZI pulse stream.

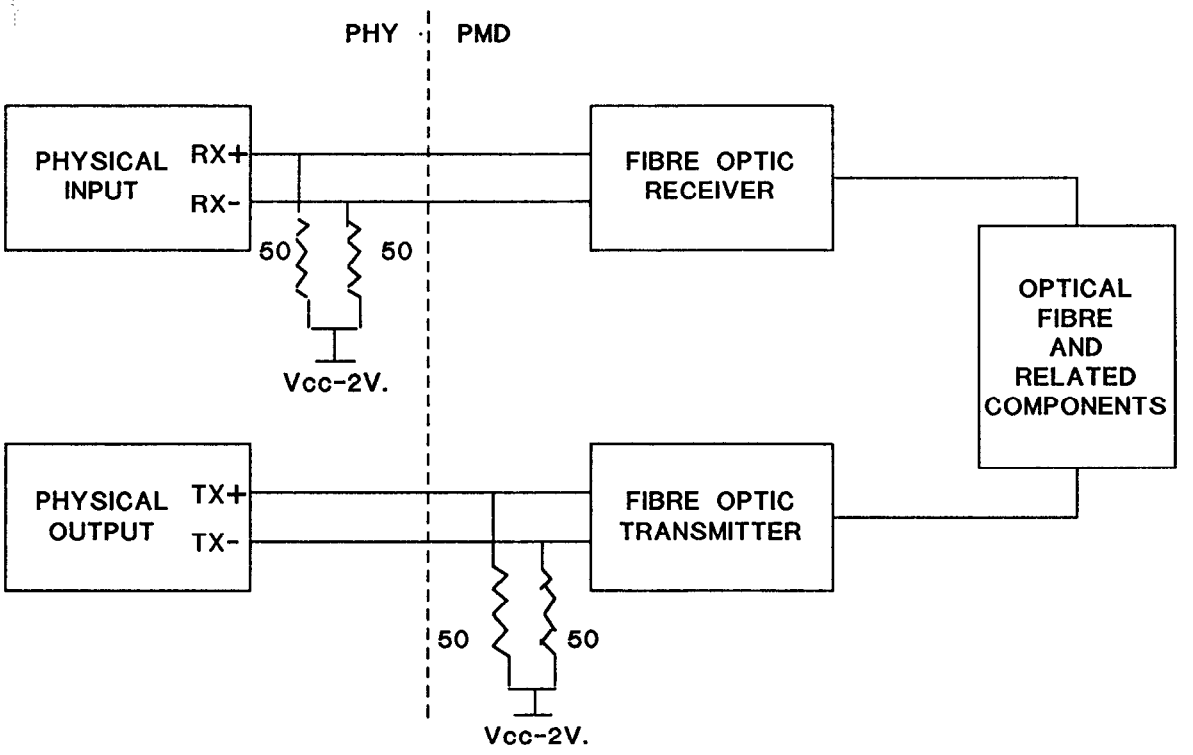

VCC is the power positive voltage for PHY and PMD.

Figure D.1 - Test configuration for dc-coupled components

Provided by IHS under license with ISO
Copyright International Organization for Standardization
Not for Resale

TX+ and TX- form a differential output. They connect the Encode function output to the Fibre Optic Transmitter input. The data is transferred as an NRZI pulse stream.

The differential input/output signals are shown dc-coupled in figure D.1. This dc coupling was assumed in the jitter allocation shown in annex E.

The differential input/output signals are shown ac-coupled in figure D.2 as this may be useful to allow for power supply mismatches between components. An implementation using the ac-coupled scheme may need to provide for jitter induced due to base-line wander across the capacitors.

The differential interface signals between PHY and PMD should be compatible with both the 10K and the 100K ECL logic families.

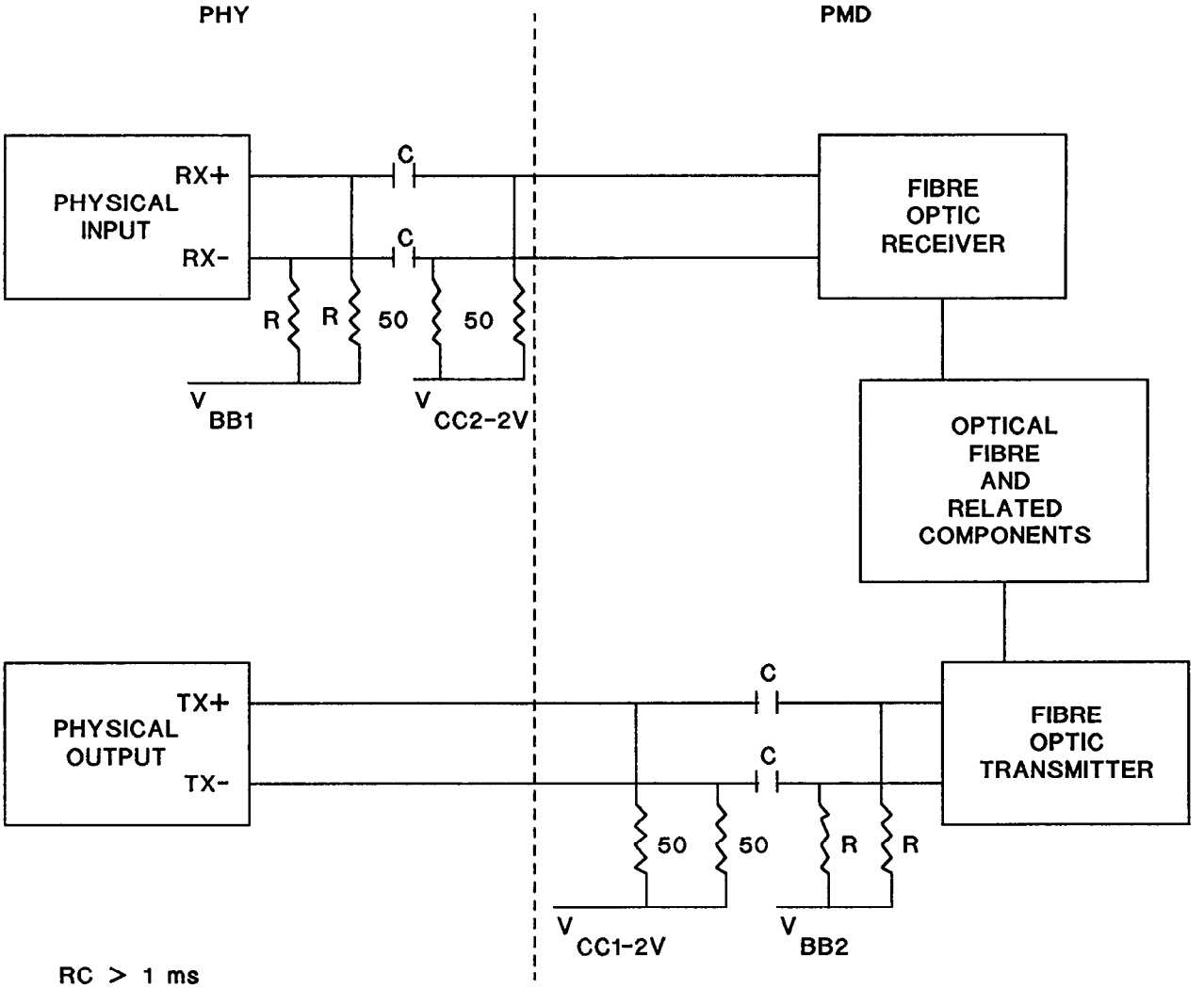

RC > 1 ms

VCC1, VBB1 are the power positive and bias levels for PHY and
VCC2 and VBB2 are the corresponding levels for PMD, respectively.

Figure D.2 - Test configuration for ac-coupled components

No reproduction or networking permitted without license from IHS

Provided by IHS under license with ISO

Copyright International Organization for Standardization
Not for Resale

Annex E

(informative)

Example of system jitter allocation

This annex contains an example of a jitter budget for an FDDI physical link.

E.1 Jitter sources

Jitter in the fibre optic components consists of Duty Cycle Distortion (DCD), Data Dependent Jitter (DDJ), and Random Jitter (RJ). Jitter in the recovered clock consists of Static Alignment Error (SAE), DDJ, and RJ components. SAE is an offset of the decision time slot (clock) from the optimal sampling position. When the clock coincides with the optimal sampling position, the minimum BER is achieved. The major causes of SAE are an initial misalignment error and differential delays between data and clock paths induced by temperature fluctuations and aging. See annex A for additional information on jitter measurements and definitions.

The jitter values are expressed as peak-peak values. For RJ, both peak-peak values and rms values are given. The peak-peak value is defined as that value for which the probability that it will be exceeded is equal to $2,5 \times 10^{-10}$. For a Gaussian probability of random jitter, the different components in the link are assumed to be uncorrelated and are assumed to add as the square root of the sum of their squares.

The jitter budget is provided to document the thinking underlying the PMD specifications and to serve as guidance for the development of PMD and PHY components. Conforming FDDI stations are required to comply only with the requirements expressed in the main body of this part of ISO/IEC 9314. For the interconnection of conforming FDDI attachments, the true requirement for interoperability is at the optical interface provided by each attachment. These requirements are given in clauses 5 and 6.

E.2 Jitter calculation example

The accumulation of peak-peak jitter should not exceed the code-bit period of 8 ns. Using the jitter data from table E.1, the following sample calculation is given:

```
Total Jitter
     = (PHY In) DCD + (PHY In) DDJ + SAE + C_DDJ
           +(((PHY In) RJ)**2 + (C_RJ)**2)**1/2
     = 1,4 + 2,2 + 1,5 + ((2,27**2) + (1,8**2))**1/2
     = 8,0 ns
```

No reproduction or networking permitted without licence from IHS

Provided by IHS under license with ISO
Copyright International Organization for Standardization
Not for Resale

Table E.1 - System jitter budget example

Item	DCD (ns) peak-peak	DDJ (ns) peak-peak	RJ (ns)* peak-peak (rms)
PH_DATA.request (PHY Out)	0,4	0,0	0,32 (0,025)
Active Output Interface (PMD Out)	1,0	0,6	0,76 (0,06)
Active Input Interface (PMD In)	1,0	1,2	0,76 (0,06)
PM_UNITDATA.indication (PHY In)	1,4	2,2	2,27 (0,18)
Clock Recovery Jitter:**			
SAE and Clock DDJ (C_DDJ)	1,5 ns peak-peak		
Clock RJ (C_RJ)	1,8 ns peak-peak (0,143 ns rms)		

NOTES

* Peak-peak RJ components are evaluated at a probability of $2,5 \times 10^{-10}$. For a Gaussian distribution, the peak-peak jitter is then 12,6 times the rms jitter.

** SAE, C_DDJ, and C_RJ are implementation-dependent.

Provided by IHS under license with ISO

Copyright International Organization for Standardization
Not for Resale

Annex F

(informative)

Keying considerations

Clause 4 specifies the keying required on all receptacles within FDDI cabinets for FDDI conformance. Four different keys, denoted A, B, M, and S, are specified. This annex suggests how these keys may be used in FDDI cabling systems.

F.1 Receptacle keying

The receptacle keys as viewed from the front of the receptacle with the cavity for the plug below the key as shown in simplified form are

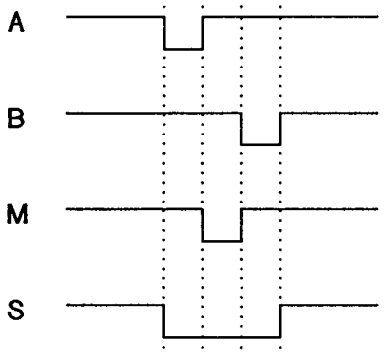

A — Denotes main ring trunk connection Primary In/Secondary Out

B — Denotes main ring trunk connection Secondary In/Primary Out

M — Denotes master connection of a concentrator

S — Denotes single attachment station connection

F.2 Plug keying

The potentially useful keys for plugs on FDDI cables as viewed from the rear of the plug with the body of the plug below the key as shown in simplified form are

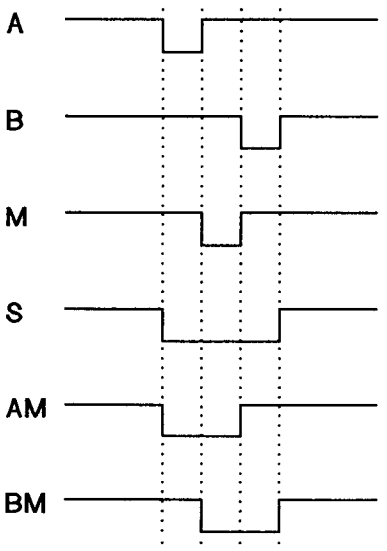

A — Inserts into A-keyed receptacles only

B — Inserts into B-keyed receptacles only

M — Inserts into M-keyed receptacles only

S — Inserts into A-, B-, M-, or S-keyed receptacles

AM — Inserts into A- or M-keyed receptacles only

BM — Inserts into B- or M-keyed receptacles only

Provided by IHS under license with ISO
Copyright International Organization for Standardization
Not for Resale

F.3 Cabling systems

There are three system cabling defects that may cause serious and potentially hard-to-detect or hard-to-diagnose operational difficulties which may be prevented to varying degrees through the use of cable keying techniques. These are

(a) The reversal of a dual attachment station within the ring trunk such that what was intended to be the A connection is now the B connection and vice versa. This causes the MACs in the station to be inserted in the opposite ring than was intended.

(b) The connection of a single attachment station directly into the ring trunk by connecting it to either an A- or B-keyed receptacle. This causes a break in the ring trunk.

(c) The connection of the back side (M-keyed receptacle) of a concentrator directly into the ring trunk by connecting it to either an A- or B-keyed receptacle. This causes a break in the ring trunk.

Using plugs with keying as listed above on cables enables three cabling systems for FDDI use.

The first cabling system uses a cable with an M-keyed plug on one end and an S-keyed plug on the other (M-to-S) for connecting a single attachment station (S-keyed receptacle) to the master port (M-keyed receptacle) of a concentrator. The M-to-S cable is also used to connect a concentrator master port (M-keyed receptacle) to a dual attachment station (A- or B-keyed receptacle) for use as a single attachment station. This system uses a cable with an A-keyed plug on one end and a B-keyed plug on the other (A-to-B) for connecting dual connection stations into the ring trunk. This cabling system prevents miscabling errors (a) and (b) and discourages miscabling error (c) because the M-to-S cable, which is presumably coded differently from the A-to-B cable used in the ring trunk, is the only one that may be used when a dual attachment station is to be connected for use as a single attachment station. This cabling system also has the advantage that looking at the loose end of a cable tells the observer what type of connection is expected to be at the other end of the cable.

The second cabling system is the same as the first, except that it uses a cable with an AM-keyed plug on one end and an BM-keyed plug on the other (AM-to-BM) instead of the A-to-B cable for ring trunk connections. This system has the advantage that a dual attachment station may be replugged for use as a single attachment station without replacing the cable associated with it. It still prevents miscabling errors (a) and (b) but does not prevent or discourage miscabling error (c) because either cable may be used to connect a concentrator master port (M) to a dual attachment station for use as a single attachment station.

The third cabling system uses S-keyed plugs on both ends of all cables. All cables are S-to-S and are usable for all connections. This system prevents none of these miscablings from occurring in the installation or modification of an FDDI system. Its advantage is that one cable satisfies all needs.

The use of the specified receptacle keying for all FDDI attachment devices allows the interchangeable use of any, or all three, of these cabling systems for all FDDI systems at the discretion of the user, or the supplier, or both.

No reproduction or networking permitted without License from IHS

Provided by IHS under license with ISO

Copyright International Organization for Standardization
Not for Resale

Annex G

(informative)

Reference non-precision MIC test plug

This annex is intended to define a reference non-precision MIC plug compatible with clause 7 which specifies the media attachment requirements.

It is not the intent of this annex to provide a complete detail drawing of a Precision MIC Plug.

Figure G.1 shows the detail for a Reference Non-Precision MIC Plug design. Only those dimensions needed to ensure intermateability with figures 5 and 6 are shown.

Provided by IHS under license with ISO
Copyright International Organization for Standardization
Not for Resale

Dimensions in millimetres
(inches between square brackets)

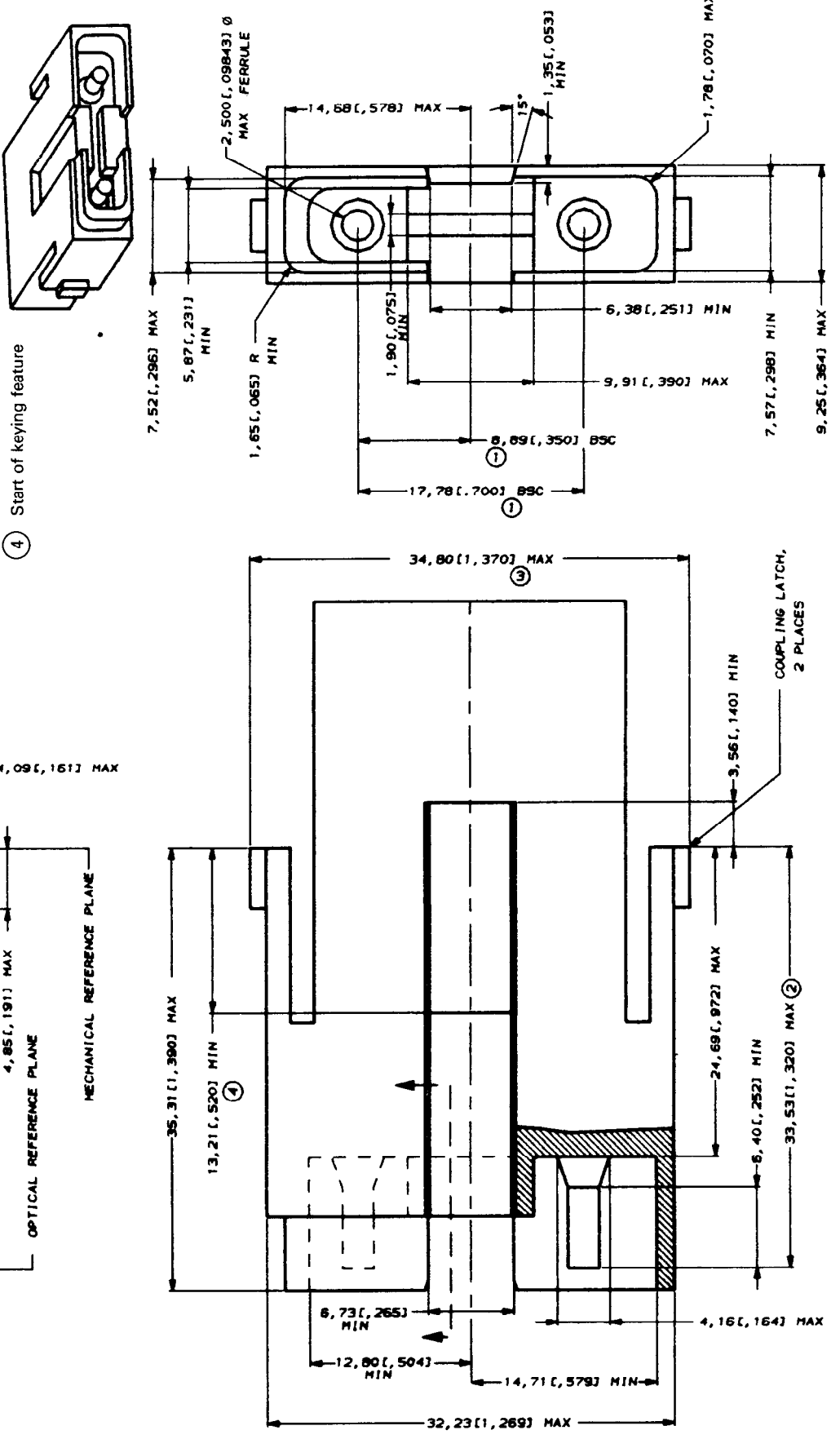

Figure Q.1 – Reference non-precision MIC plug

(1) A basic dimension is an exact value without a tolerance which is used to define a location.

(2) Dimension is given in the free state, the ferrules shall be capable of moving to reduce dimension to 32,8 mm [1,293 in]. Mic plug ferrule end shall seat to the optical reference plane with a static force of 0,68 kg [1,5 lb] min. to 1,36 kg [3,0 lb]) max. per ferrule.

(3) Dimension is given in the free state. The coupling latches shall be capable of moving to reduce dimension to 32,51 mm [1,280 in] min.

(4) Start of keying feature

Provided by IHS under license with ISO

Copyright International Organization for Standardization
Not for Resale

UDC 681.3 : 621.39 : 666.189.21 : 666.22

Descriptors: data processing, information interchange, network interconnection, optical fibres, computer interfaces, communication procedure, physical layer.

Price based on 47 pages

--`,,```,,,,````-`-`,,`,,`,`,,`---

Provided by IHS under license with ISO

Copyright International Organization for Standardization
Not for Resale