# INTERNATIONAL STANDARD

# ISO/IEC 9314-25

First edition
1998-10

## Information technology –
## Fibre Distributed Data Interface (FDDI) –
## Part 25:
## Abstract Test Suite for FDDI – Station Management Conformance Testing (SMT-ATS)

© ISO/IEC 1998

All rights reserved. Unless otherwise specified, no part of this publication may be reproduced or utilized in any form or by any means, electronic or mechanical, including photocopying and microfilm, without permission in writing from the publisher.

ISO/IEC Copyright Office • Case postale 56 • CH-1211 Genève 20 • Switzerland

Reference number
ISO/IEC 9314-25:1998(E)

PRICE CODE XP

*For price, see current catalogue*

Copyright International Organization for Standardization
Provided by IHS under license with ISO
No reproduction or networking permitted without license from IHS

Not for Resale

# Contents

Page

1 Scope ..... 1
2 Normative references ..... 1
3 Definitions ..... 1
4 Convention and abbreviations ..... 2
5 Timer definition ..... 2
6 Physical Connection Management (PCM) & Entity Coordination Management (ECM) - Abstract Test Suites ..... 5
7 CFM conformance tests ..... 74
8 Ring Management (RMT) - Abstract Test Suite ..... 127
9 Frame Base Management (FBM) - Abstract Test Suite ..... 180
10 Management Information Base (MIB) - Abstract Test Suite ..... 522

ANNEX A (normative) PIXIT Proforma for Fiber Distributed Data Interface (FDDI) - Station Management (SMT) - Ring Management (RMT) ..... 893

ANNEX B (normative) PIXIT Proforma for Fiber Distributed Data Interface (FDDI) - Station Management (SMT) - Management Information Base (MIB) ..... 897

## Tables

Table 1 - DAS Configuration Test Case Summary ..... 109
Table 2 - DAC Configuration Test Case Summary ..... 110
Table 3 - SAS Configuration Test Summary ..... 110
Table 4 - SAC Configuration Test Case Summary ..... 110



Copyright International Organization for Standardization
Provided by IHS under license with ISO
No reproduction or networking permitted without license from IHS
Not for Resale

**Figures**

Figure 1 - Tester Configuration for Indicated Cases ..... 9
Figure 2 - Tester Configuration for Indicated Cases ..... 15
Figure 3 - Tester Configuration for Indicated Cases ..... 16
Figure 4 - Tester Configuration for Indicated Cases ..... 17
Figure 5 - Tester Configuration for Indicated Cases ..... 18
Figure 6 - Tester Configuration for Indicated Cases ..... 65
Figure 7 - Tester Configuration for Indicated Cases ..... 67
Figure 8 - Tester Configuration for Indicated Cases ..... 67
Figure 9 - Tester Configuration for Indicated Cases ..... 69
Figure 10 - Tester Configuration for Indicated Cases ..... 70
Figure 11 - Tester Configuration for Indicated Cases ..... 72
Figure 12 - Single MAC DAS Test Configurations (1 of 3) ..... 111
Figure 13 - Single MAC DAS Test Configurations (2 of 3) ..... 112
Figure 14 - Single MAC DAS Test Configurations (3of 3) ..... 113
Figure 15 - Dual MAC DAS Test Configurations (1 of 3) ..... 114
Figure 16 - Dual MAC DAS Test Configurations (2 of 3) ..... 115
Figure 17 - Dual MAC DAS Test Configurations (3 of 3) ..... 116
Figure 18 - Single MAC DAC Test Configurations (1 of 2) ..... 117
Figure 19 - Single MAC DAC Test Configurations (2 of 2) ..... 118
Figure 20 - Dual MAC DAC Test Configurations (1 of 2) ..... 119
Figure 21 - Dual MAC DAC Test Configurations (2 of 2) ..... 120
Figure 22 - SAS Test Configurations ..... 121
Figure 23 - No MAC SAC Test Configurations ..... 122
Figure 24 - Single MAC SAC Test Configurations ..... 123
Figure 25 - Optional Master Port Permitted Path Single MAC DAC Test Configurations ..... 124
Figure 26 - Optional Master Port Permitted Path Dual MAC DAC Test Configurations ..... 125
Figure 27 - Ring Hold Option DAS Test Configurations ..... 126



Copyright International Organization for Standardization
Provided by IHS under license with ISO
No reproduction or networking permitted without license from IHS
Not for Resale

# FOREWORD

ISO (the International Organization for Standardization) and IEC (the International Electrotechnical Commission) form the specialized system for worldwide standardization. National bodies that are members of ISO or IEC participate in the development of International Standards through technical committees established by the respective organization to deal with particular fields of technical activity. ISO and IEC technical committees collaborate in fields of mutual interest. Other international organizations, governmental and non-governmental, in liaison with ISO and IEC, also take part in the work.

In the field of information technology, ISO and IEC have established a joint technical committee, ISO/IEC JTC 1. Draft International Standards adopted by the joint technical committee are circulated to national bodies for voting. Publication as an International Standard requires approval by at least 75 % of the national bodies casting a vote.

International Standard ISO/IEC 9314-25 was prepared by Joint Technical Committee ISO/IEC JTC 1 *Information technology*, Subcommittee SC 25, *Interconnection of information technology equipment.*

ISO/IEC 9314 consists of the following parts, under the general title *Information technology – Fibre Distributed Data Interface (FDDI):*

- *Part 1: Token Ring Physical Layer Protocol (PHY)*
- *Part 2: Token Ring Media Access Control (MAC)*
- *Part 3: Physical Layer Medium Dependent (PMD)*
- *Part 4: Single Mode Fibre Physical Layer Medium Dependent (SMF-PMD)*
- *Part 5: Hybrid Ring Control (HRC)*
- *Part 6: Station Management (SMT)*
- *Part 7: Physical Layer Protocol (PHY-2)*
- *Part 8: Media Access Control-2 (MAC-2)*
- *Part 9: Low-Cost Fibre – Physical Medium Dependent (LCF-PMD)*
- *Part 10: Token Ring Twisted Pair Physical layer Medium Dependent (TP-PMD)*
- *Part 13: Conformance Test Protocol Implementation Conformance Statement proforma (CT-PICS)*
- *Part 20: Physical Medium Dependent Conformance Testing (PMD-ATS)*
- *Part 21: Physical Layer Protocol Conformance Testing (PHY-ATS)*
- *Part 25: Abstract Test Suite for FDDI – Station Management Conformance Testing (SMT-ATS)*
- *Part 26: Media Access Control Conformance Testing (MAC-ATS)*

--`,,```,,,,````-`-`,,`,,`,`,,`---



Copyright International Organization for Standardization
Provided by IHS under license with ISO
No reproduction or networking permitted without license from IHS
Not for Resale

# INTRODUCTION

The International Organization for Standardization (ISO) has developed a standard to define the procedures required for Conformance Testing. These procedures are set forth in ISO 9646, Parts 1-7. Part 3 defines the language syntax to be used for writing Abstract Test Suites (ATS), that language is Tree and Tabular, Combined Notation (TTCN).

The Station Management (SMT) Abstract Test Suite (ATS) directly supports the FDDI Protocol Implementation Conformance Statement (PICS) Proforma and works in correlation with three other FDDI ATS standards.

This ATS for FDDI SMT provides the test procedures and test cases required to test the station management protocol described in the SMT standards. SMT specified the local portion of the system management application process for FDDI, including the control required for proper operation of an FDDI station in an FDDI ring. SMT provided services such as connection management, station insertion and removal, station initialization, configuration management, fault recovery, communication protocol for external authority, scheduling policies and the collection of statistics. SMT interact with PMD, PHY, and MAC for testing.

The three ATS standards when combined with SMT, that make up the complete Conformance Test for the FDDI Protocol are:

a) An ATS for FDDI Physical Medium Dependent (PMD) that provides a conformance test for FDDI PMD. PMD specifies the optical interface of FDDI stations. PMD is not a protocol standard and this ATS requires the measurement of physical quantities such as optical power, wavelength and signal jitter. The PMD ATS differs from the methodology of higher level protocol conformance tests written using the Tree and Tabular Combined Notation as specified by ISO 9643-3, because the TTCN notation does not provide a suitable vehicle for Physical Layer testing, where there is no concept of a protocol data unit and where physical quantities must be measured.

b) An ATS for the FDDI Physical Layer Protocol (PHY) that provides a conformance test for FDDI PHY. PHY specifies the upper sublayer of the Physical Layer for the FDDI, including the data encode/decode, framing and clocking, as well as the elasticity buffer, smoothing and repeat filter functions. FDDI PHY, however, does contain several state machines and implements a protocol at the level of FDDI code symbols. The only physical quantity that must be measured in this conformance test is frequency. The PHY ATS cannot use the TTCN notation. A unique notation is developed in the PHY ATS for specifying test patterns and expected results in terms of FDDI code symbol strings.

c) An ATS for FDDI Media Access Control (MAC) that provides a Conformance test for FDDI MAC. MAC specifies the lower sublayer of the Data Link Layer for FDDI. It specifies access to the medium, including addressing, data checking and data framing. MAC also specifies the receiver and transmitter state machines. Since MAC is a protocol that deals primarily with complete PDUs, the Tree and Tabular Combined Notation language specified in ISO 9643-3 is used to specify MAC protocol tests.

International Standard ISO/IEC 9314-25:1998, *Information technology - Fibre Distributed Data Interface (FDDI) - Station Management Conformance Testing (SMT-ATS)* was developed by ISO/IEC JTC 1/SC 25.

--`,,```,,,,````-`-`,,`,,`,`,,`---



Copyright International Organization for Standardization
Provided by IHS under license with ISO
No reproduction or networking permitted without license from IHS
Not for Resale

# INFORMATION TECHNOLOGY – FIBRE DISTRIBUTED DATA INTERFACE (FDDI) –

# Part 25: Abstract Test Suite for FDDI – Station Management Conformance Testing (SMT ATS)

## 1 Scope

This part of ISO/IEC 9314 contains the Abstract Test Suites for the Fiber Distributed Data Interface (FDDI) token ring Station Management (SMT) layer protocol. The SMT Protocol is extensive and very complex. In the development process, the protocol was broken into six separate areas. Those areas dealt with Physical Connection Management (PCM), Entity Coordination Management (ECM) Ring Management (RMT), Configuration Management (CMT), Frame Based Management (FBM) and Management Information Base (MIB).

This SMT ATS is divided along the same boundaries, with the exception that PCM and ECM are combined. Those two concepts are tested together. The formal description language used for Abstract Test Suite (ATS) development is Tree and Tabular Combined Notational (TTCN) and is defined in ISO 9646Framework. TTCN is intended for higher layer protocol testing and requires the use of discreet Protocol Data Units (PDUs). The TTCN notation is used in the test cases for RMT, FBM and MIB. It cannot be used for PCM, ECM and CFM. These three protocols use line states as the method of conveying information.

The TTCN (P) is similar in structure to TTCN but changes the paradigm from PDUs to line states. A description of the concept of TTCN (P) can be found in the beginning of section 6, PCM.

## 2 Normative references

The following normative documents contain provisions which, through reference in this text, constitute provisions of this part of ISO/IEC 9314. At the time of publication, the editions indicated were valid. All standards are subject to revision, and parties to agreements based on this part of ISO/IEC 9314 are encouraged to investigate the possibility of applying the most recent editions of the standards indicated below. Members of IEC and ISO maintain registers of currently valid International Standards.

ISO/IEC 7498-1:1994, *Information technology – Open Systems Interconnection – Basic Reference Model: The Basic Model*

ISO/IEC 9314-1:1989, *Information processing systems – Fibre Distributed Data Interface (FDDI) – Part 1: Token Ring Physical Layer Protocol (PHY)*

ISO/IEC 9314-2:1989, *Information processing systems – Fibre Distributed Data Interface (FDDI) – Part 2: Token Ring Media Access Control (MAC)*

ISO/IEC 9314-3:1990, *Information processing systems – Fibre Distributed Data Interface (FDDI) – Part 3: Physical Layer Medium Dependent (PMD)*

ISO/IEC 9314-6:1998 *Information technology – Fibre Distributed Data Interface (FDDI) – Part 6: Station Management (SMT)*

ISO/IEC 9646 (all parts), *Information technology – Open Systems Interconnection – Conformance testing methodology and framework*

ISO/IEC 9646-1:1994, *Information technology – Open Systems Interconnection – Conformance testing methodology and framework – Part 1: General concepts*

ISO/IEC 9646-2:1994, *Information technology – Open Systems Interconnection – Conformance testing methodology and framework – Part 2: Abstract test suite specification*

## 3 Definitions

For the purposes of this part of ISO/IEC 9314, the following definitions apply.

**3.1 Abstract Test Suite (ATS):** An ATS is a document, defined in ISO 9646, that depicts the suite of tests to be run by the test implementor to define conformance to a governing standard.



Copyright International Organization for Standardization
Provided by IHS under license with ISO
No reproduction or networking permitted without license from IHS
Not for Resale

**3.2 Frame Based Management (FBM):** FBM defines the frame formats and protocols used to manage FDDI stations on a ring in a peer-to-peer relationship.

**3.3 Management Information Base (MIB):** The MIB provides the specification and capabilities of management information and its relationships to systems management.

**3.4 Connection Management (CMT):** CMT controls the establishment and maintenance of an FDDI connection.

**3.5 Physical Connection Management (PCM):** PCM controls initializations of a Physical connection, maintenance of the connection and closing of the connection.

**3.6 Ring Management (RMT):** RMT monitors the MAC functions in an FDDI station and supports establishment and maintenance of an operational ring.

# 4 Convention and abbreviations

## 4.1 Conventions

## 4.2 Abbreviations

| | |
|---|---|
| ATS: | Abstract Test Suite; |
| CFM: | Configuration Management; |
| F: | Fail (when used in the verdict column of the Dynamic Behavior tables); |
| I: | Inconclusive (when used in the verdict column of the Dynamic Behavior tables); |
| ILS: | Idle Line State; |
| IUT: | Implementation Under Test; |
| MAC: | Media Access Control; |
| MLS: | Master Line State; |
| P: | Pass (when used in the verdict column of the Dynamic Behaviour tables); |
| PCM: | Physical Connection Management; |
| PDU: | Protocol Data Unit defined in terms of SMT and MAC Frames; |
| PHY: | Physical Layer Protocol; |
| PICS: | Protocol Implementation Conformance Statement; |
| PIXIT: | Protocol Implementation extra Information for Testing; |
| TTCN: | Tree and Tabular Combined Notation; |
| TTCN(P): | Tree and Tabular Combined Notation for PCM & CFM; |
| QLS: | Quiet Line State; |
| ALS: | Active Line State; |
| HLS: | Halt Line State; |
| ERR: | Error; |
| RMT: | Ring Management; |
| MIB: | Management Information Base. |

# 5 Timer definition

A set of timers, as described below, is used in the test suite, their values must be initialized prior to the beginning of test, unless a default value is specified.

**T_REQ:** the Target Token Rotation Timer
(TTRT) is configured in the IUT's MAC in units of µs. This value will be converted to units of 80 ns for MAC claim process.


Copyright International Organization for Standardization
Provided by IHS under license with ISO
No reproduction or networking permitted without license from IHS Not for Resale

**T_REQ1:** an alternate TTRT configured in the IUT's MAC in units of μs. This value will be converted to units of 80 ns for MAC claim process.

**T_REQ2:** an alternate TTRT configured in the Other's MAC in units of μs. This value will be converted to units of 80 ns for MAC claim process.

**T_Max:** the maximum token rotation time in μs.

**D_Max:** the maximum ring latency. The default value is 1773 μs.

**T_Non_Op:** time to allow ring recovery to occur before duplicate address conditions are examined. The default value is 1 s.

**RM_React:** maximum for the RMT state machine to recognize that transition conditions exist and to execute the appropriate transition. The default value is 83 ms.

**T_Jam:** time for which Jam Beacon is sent. The default value is 370 ms.

**T_DBJ:** time to start the second Beacon of the Double Beacon Jam after the first Beacon is sent. The default value is 82 ms.

**T-Direct:** time for which a Directed Beacon is sent before the Trace function is invoked. The default value is 370 ms.

**T_Stuck:** time to allow a Stuck Beacon to be sent, followed by the initiation of a Trace. The default value is 8 s.

**T_Rmode:** the maximum time allowable for Restricted Dialogue on the ring. The default value is zero seconds for Non-Used Restricted Dialogue.

**T_Announce:** the interval between sending Jam Beacons. The default value is 2 500 ms.

**T_Limit:** The rate-limiting interval for the Status Report Protocol. The default value is 2 s.

**Topr:** Time required for a test operator to initiate operation on the IUT, for example, triggering NIF request frame to be sent from the IUT. This is used in conjunction with the TTCN Implicit Send event for test coordination. This test suite uses a default value of 3 min.

The following are the expiration values of the timers used in PCM test cases. Whenever the name and the value correspond to ISO/IEC 9314-6 the reference is indicated.

**TB_Min**: Minimum Break time for link.

Range: TB_Min ≥ 4.823 ms with default values
Default: 5 ms (SMT PCM);

**TB_Max:** Break time before the BS_Flag is set. TB_Max shall be sufficiently large so that it will not be set inadvertently by noise generated by an optical bypass switch, which is bounded by MI_Max.

Range: TB_Max ≥ 30.0 ms with default values
Default: 50 ms (SMT PCM);

**MI_Max:** Maximum Optical Bypass media interruption time. The range and default value for MI_Max is specified in the PMD document.

Range: MI_Max ≤ 15.0 ms
Default: 15 ms (SMT PCM)

**C_Min:** Minimum time required to remain in the Connect State to ensure that the other end has recognized Halt Line State.

Range: C_Min ≥ 1.2 ms with default values
Default: 1.6 ms (SMT PCM);

**C_Second:** A timer used to check PCM wait for a change in the Connect State since it enters Connector State from Break State and has not yet received HLS.

Default: 1 s;

--`,,```,,,,````-`-`,,`,,`,`,,`---



Copyright International Organization for Standardization
Provided by IHS under license with ISO
No reproduction or networking permitted without license from IHS Not for Resale

**PC_React:** Maximum time for PCM to make a state transition to Break upon receiving QLS.

Range: PC_React ≤ 3.0 ms
Default: 3 ms (SMT PCM);

**LS_Min:** Length of time continuous reception of ILS is required to be used by PCM.
Range: 25 µs ≥ LS_Min ≥ 0.48 µs with default values
Default: 0.48 µs(SMT PCM);

**LS_Max:** Maximum time to reestablish the correct line state as specified in the PHY document.

Range: LS_Max ≤ 25 µs
Default: 25 µs (SMT PCM);

**TL_Min:** Minimum time to transmit a PHY line state before advancing to the Next PCM state. TL-Min is set to twice the time required for line state recognition(LS_Max).

Range: TL_Min ≥ 50 µs with default values
Default: 50 µs (SMT PCM);

**N_Second:** A Timer used to check PCM wait to receive ILS in Next State

Default: 1 s;

**LS_Less:** A timer which measures the amount of time that it take the IUT to make a correct Line State transition.

Default: 0.24 µs;

**T_Out:** Signaling timeout. The minimum time that a PCM State Machine will remain in a state awaiting a line state change. When a line state change is expected and no transition is made in T_Out time, a transition shall be made to the Break State.

Range: T_Out ≥ 100 ms
Default: 100 ms (SMT PCM);

**LC_Short:** Short Link Confidence Test Time

Range: LC_Short > 5*10(4) ns
Default: 50 ms (SMT PCM);

**LC_Medium:** Medium Link Confidence Test Time.

Range: LC_Medium ≥ 50 *10(LER_Cutoff) ns
Default: 500 ms (SMT PCM);

**LC_Long:** Long Link Confidence Test Time.

Range: LC_Long ≥ 500 * 10 (LER_ Cutoff) ns
Default: 5 s (SMT PCM);

**LC_Extended:** Extended Link Confidence Test Time.

Range: LC_Extended ≥ 50 s
Default: 50 s (SMT PCM);

**T_Next(7):** LC_Test, Time for Link Confidence Test (SMT PCM);

**B_Second:** A timer used to check when IUT detects Link Error Rate exceeds the LER_Cutoff threshold; it enters Break State and transmits QLS.

Default: 1 s;

**T_Next(9):** Time for the optional MAC Local Loop to prevent deadlock. This allows sufficient time for MAC recovery process completion and the exchange of neighbor information frames.

Range: T_Next(9) ≥200 ms
Default: 200 ms (SMT PCM).


Copyright International Organization for Standardization
Provided by IHS under license with ISO
No reproduction or networking permitted without license from IHS Not for Resale

**NS_Max:** The maximum length of time that noise as measured by TNE, is allowed before a connection is broken down and restarted.

Range: 5.8 ms ≥ NS_Max ≥ 0.7255 ms
Default: 1.3 ms (SMT PCM);

**Trace_Max:** Maximum propagation time for a Trace on an FDDI topology. Trace_Max places a lower bound on the detection time for a nonrecovering ring (T_Stuck)

Range: Trace_Max ≥ 6.001773 s with default values
Default: 7.0 s

# 6 Physical Connection Management (PCM) & Entity Coordination Management (ECM) - Abstract Test Suites

## 6.1 Notation for PCM Tests

PCM is implemented as a complex state
machine and it is therefore highly desirable to use a formal notation to specify precisely conformance tests. One such formal notation is the Tree and Tabular Combined Notation (TTCN) as defined in ISO 9646-3. However PCM does not fit the TTCN paradigm well. The primary problem is that TTCN, which is intended for higher level protocol tests, requires that the protocol uses discrete Protocol Data Units (PDUs). It assumes that these PDUs are queued when received and that the TTCN "?" operator tests the PDU at the front of the receive queue. PCM signaling does not use PDUs but instead uses line states as the method of conveying information.

This document uses a notation called TTCN(P) to express the PCM tests. It is similar to TTCN, but changes the paradigm somewhat and simplifies the notation.
The key to understanding TTCN(P) is that the Implementation Under Test (IUT) is always considered to take on one of the following values:

- Quiet Line State (QLS)
- Idle Line State (ILS)
- Halt Line State (HLS)
- Master Line State (MLS)
- Active Line State (ALS)
- Noise Line State (NLS)
- Line State Unknown (LSU)

No other values can be set.

NLS is defined to be any condition which occurs in any of the other line states, which satisfies the conditions for termination of that state but does not satisfy the criteria for entry into any of the other line state. The tester never transmits NLS, and, in most cases the reception of NLS causes the IUT to fail the test.

The TTCN(P) "?" operator tests the contents of a received line state register in the tester, for example, the test ?ILS is satisfied if the current line state is ILS.

The tester is either transmitting a predefined MAC frame, repeating symbols received when its input is in ALS or is continuously transmitting one of the following:

- QLS
- ILS
- HLS
- MLS
- ERR
- Port_Type

ERR is a special pattern transmitted during the Link Confidence Test.

Port_Type is used to mean either HLS or MLS as appropriate. This notation is used to reduce the number of separate routines. In particular the port type, which is signaled in the Signal States when

--`,,```,,,,````-`-`,,`,,`,`,,`---



Copyright International Organization for Standardization
Provided by IHS under license with ISO
No reproduction or networking permitted without license from IHS
Not for Resale

n=1 and n=2, is irrelevant to many test cases. Therefore the tests include subroutines, whose purpose is simply to step the IUT to the state where the actual test begins, use the Port_Type notation to allow the same routine to serve several port types.

A TTCN(P) test procedure consists of a sequence of event lines specifying an event or an action to take place at a given instant during the testing. The time progression is represented by the indentation number to the left of every event line in the form of [1], [2], etc. An event line may be one of the following: start transmitting line state symbols, check the current line state, start and test expiration of timers, invoke other test procedures (tree attachment), and a GOTO statement. These events are written in the format shown below:

```
  [n] !line-state       /* Start transmitting
line-state symbols as specified, e.g. HLS */
  [n] !Repeat           /* Repeat input symbols received while input is in ALS, starting with the J symbol
and stopping with the first V, I or H symbol. When V or H symbols are encountered the Repeat Filter
rules of PHY are observed */
  [n]!Packet            /* cause the tester to transmit a single MAC Packet; when transmission of the
packet is complete, the tester transmits ILS */
  [n] ?line-state       /* check if the current line state is in a specific state */
  [n] ?OTHERWISE        /* any line state */
  [n] START timer-name  /* start the timer with pre-specified duration */
  [n] ?TIMEOUT timer-name  /* test for
expiration for the specified timer */
  [n] +test-procedure-name   /* call another test procedure */
  [n] GOTO label            /* goto another event line with indicated label */
```

As in many programming languages, a comment is a character string of the following form:

/* Text of comment */

A label for an event line is denoted by a sequence of letters ending with a ":", and appears after the indentation level number, for example,

[3] L1:?TIMEOUT C_min.

The "!" Transmit event means that the tester begins sending the indicated line state and continues sending it until another "!" operator is encountered.

The START timer event may be combined with the Transmit (!) or Line state check (?) event lines. Multiple timers may be started on the same event. For example,

[1] !QLS START TB_Min, START TB_Max.

The event lines are evaluated starting from the first indentation level, [1]. There may be several event lines at each indentation level. These event lines represent a set of alternatives and the tester must wait for at least one of them to occur before proceeding to the next indentation level. If multiple events occur at the same time, the event line appearing first applies. A transmit event line (!) is considered to have occurred or completed when the transmission of the specified line state symbols is initiated. A line state check event (?) is satisfied when the current line state matches the specified state.

When an event line is satisfied, the tester moves on to the next indentation level following that event line. If there is no higher level event line, then the test is complete. If a completed event line contains a verdict specification, the test is also considered completed, even if there is a higher indentation level event line following.

The event lines, with the exception of GOTO, SEND and Tree Attachment Event, may assign one of these verdicts: PASS, FAIL, or INCONCLUSIVE.

A GOTO event can only specify the labels appearing on the first line of an indentation level that is lower or equal to the current indentation level.

An event line that invokes another procedure is considered not satisfied if none of the first level event lines in that procedure have occurred.



--`,,```,,,,````-`-`,,`,,`,`,,`---
Copyright International Organization for Standardization
Provided by IHS under license with ISO
No reproduction or networking permitted without license from IHS
Not for Resale

Note that PCM is intended to operate in very noisy environments (perhaps as bad as a BER of $10^{-2}$ and does not generally react to brief noise events. We do not simulate noise in our PCM tests except for the Link Quality Tests; rather we expect that the IUT and the tester transmit nothing but clean line states without any errors. If the IUT transmits NLS or LSU it is always grounds for failure.

"TTCN(P) does not use the normal TTCN Constraints. This is because the Constraints section of TTCN uses PDUs rather than Line States to define Constraints.

An example illustrates the TTCN(P) notation. This example is the test case To_Next specified in 6.2.1.5:

**Procedure:**

```
[1]+Start_To_Connect
[2]  !HLS Start C_Min
[3]    A:?Timeout C_Min /*Comment*/
[4]      B:?HLS
[5]        Goto B
[4]      ?ILS                    Pass
[4]      ?Otherwise              Fail(2)
[3]    ?HLS
[4]      Goto A
[3]    ?Otherwise                Fail(1)
```

In **To_Next** the procedure **Start_To_Connect** is attached by the first statement:

**[1]+Start_To_Connect**, which is specified in 6.3.2, is:

**Procedure:**

```
[1]!QLS Start TB_Min
[2]  ?Timeout TB_Min
[3]    A:?QLS
[4]      Goto A
[3]    ?HLS      /*Comment*/
[3]    ?Otherwise              Inconclusive
```

The key to understanding the attachment is that the attaching test is attached to each of the terminal leaves of the attached routine. A terminal leaf is any statement other than a GOTO that has no lower layer and is not qualified with Pass, Fail or Inconclusive verdict. In **Start_To_Connect** there is one terminal leaf:

```
[3]    ?HLS
```

Each test has a specific purpose. The purpose of **To_Next** is to verify that the IUT remains in the Connect State for at least C_Min before going to the Next State. **Start_To_Connect** is used simply to bring the IUT to the Connect State. Therefore it is a simple routine to progress a correct IUT to the Connect State and does not attempt to test all the requirements of PCM to get to the Connect State; these are tested elsewhere in an incremental fashion.

The first statement of **Start_To_Connect**, and the only statement at level 1 is:

```
[1]!QLS Start TB_Min
```

This statement causes the tester to transmit QLS and to start the TB_Min timer.

Control falls to the next statement at level 2:

```
[2]    ?Timeout TB_Min
```

This statement causes the tester to wait, still sending QLS, until the timer TB_Min expires, since there is no alternative at this level. This should cause the IUT to go to the Break State. There are three alternatives at level 3:

```
[3]    A:?QLS
[3]    ?HLS
[3]    ?Otherwise              Inconclusive
```



Copyright International Organization for Standardization
Provided by IHS under license with ISO
No reproduction or networking permitted without license from IHS
Not for Resale

Alternatives at the same level are evaluated in order and then the evaluation is repeated until one of the alternatives becomes true. One of the alternatives is always true because of the otherwise statement. At this point the IUT should either be transmitting QLS or HLS; if not, something is wrong. However, because this is not the point of the test, we label the otherwise "Inconclusive" rather than "fail". If we receive QLS, then we fall down to the following statement at level 4:

```
[4]      Goto A
```

This statement just returns the tester to level 3 at A and we loop back and evaluate the same three alternatives. Eventually the IUT should transmit HLS (signifying that it has entered the Connect State, the second alternative became true, Start_To_Connect has reached a terminal leaf), and control passes to the attaching test routine **To_Next**.

When the Start_To_Connect completes control passes to level 2, where there is one alternative:

```
[2]  !HLS Start C_Min
```

This statement causes the tester to transmit HLS and to start the timer C_Min. Control then passes to level 3 and the following alternatives:

```
[3]    A:?Timeout C_Min /*Comment*/
.
.
[3]    ?HLS
[3]    ?Otherwise   Fail(1)
```

The test purpose is to see if the IUT remains in the Connect State for at least C_Min before going to the Next State, therefore if any signal other than HLS (signifying Connect State) is received before C_Min expires, the Otherwise statement causes the test to fail. The "(1)" is a parameter used to distinguish between possibly different failure points. As long as HLS is received control will fall to a GOTO at level 4, which loops control back to B:

```
[4]      Goto A
```

Finally, when C_Min times out, control falls to:

```
[4]    B:?HLS
[5]      Goto B
[4]    ?ILS                    Pass
[4]    ?Otherwise              Fail(2)
```

As long as HLS is received, the tester continues to loop back to level 4. If ILS is received, then the IUT has made the transition to the Next State after waiting for at least C_Min and this test is passed. If anything else is received, then the test is failed.

Note that we can expand the attachment of Start_To_Connect by To_Next and get the following equivalent test routine:

**Procedure:**

```
[1]!QLS Start TB_Min
[2]  ?Timeout TB_Min
[3]   A:?QLS
[4]    Goto A
[3]   ?HLS
[4]    !HLS Start C_Min
[5]      B:?Timeout C_Min /*Comment*/
[6]        C:?HLS
[7]          Goto C
[6]        ?ILS                  Pass
[6]        ?Otherwise            Fail(2)
[5]      ?HLS
[6]        Goto B
[5]      ?Otherwise              Fail(1)
[3]   ?Otherwise                 Inconclusive
```



Copyright International Organization for Standardization
Provided by IHS under license with ISO
No reproduction or networking permitted without license from IHS Not for Resale

## 6.2 Test Cases

### 6.2.1 Connection Initialization Test:

#### 6.2.1.1 Case-ID: To_Connect_1

**Purpose:** Verify that IUT enters the Connect state after remaining in the Break state for at least TB_Min when it receives QLS.

**Test Setup:** See figure 1.

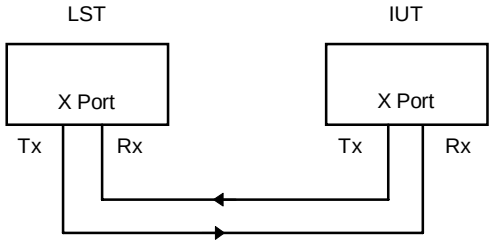


Figure 1 - Tester Configuration for Indicated Cases

**Procedure:**

```
[1]+Init              /*Comment(1)*/
[2]  !QLS Start TB_Min /*Comment(2)*/
[3]    A:?Timeout TB_Min
[4]     B:?QLS
[5]       Goto B
[4]     ?HLS                        Pass
[4]     ?Otherwise                  Fail(2)
[3]    ?QLS
[4]     Goto A
[3]    ?Otherwise                  Fail(1)
```

**Extended Comments:**
(1) The Init function (6.3.1 of this document) is called to let the IUT start from the Break State.
(2) In the Break State, the Tester transmits QLS, starts the timer TB_Min to ensure that the IUT remains in the Break State for at least TB_Min. (PC-13)

**Reasons for Failure:**
(1) Initially, the IUT is in the Break State while QLS is transmitted for at least TB_Min. If the IUT does not transmit QLS within TB_Min, then the IUT fails.
(2) The IUT transmits QLS while in the Break State and HLS when it enters the Connect State. Any other output is invalid.

#### 6.2.1.2 Case-ID: To_Connect_2

**Procedure:**

```
[1]+Init/*Comment(1)*/
[2]  !HLS Start TB_Min /*Comment(2)*/
[3]    A:?Timeout TB_Min
[4]     B:?QLS
[5]       Goto B
[4]     ?HLS                        Pass
[4]     ?Otherwise                  Fail(2)
[3]    ?QLS
[4]     Goto A
[3]    ?Otherwise                  Fail(1)
```



Copyright International Organization for Standardization
Provided by IHS under license with ISO
No reproduction or networking permitted without license from IHS
Not for Resale

**Extended Comments:**
(1) The Init function (6.3.1 of this document) is called to let the IUT start from the Break state.
(2) In the Break state, the Tester transmits HLS, starts the timer TB_Min to ensure that the IUT remains in the Break state for at least TB_Min. (PC-13)

**Reasons for Failure:**
(1) IUT must transmit QLS for TB_Min at the beginning of this procedure. If it does not meet this requirement then the IUT fails.
(2) After remaining in the Break State for longer than TB_Min, the IUT may either stay in Break or change to Connect. If the IUT transmits any line state other than QLS or HLS, the test fails.

### 6.2.1.3 Case-ID: Wait_for_Connect

**Purpose:** Show that the IUT progresses to Connect from the Break State and remains in the Connect State until HLS is received.

**Test Setup:** See figure 1.

**Procedure:**

```
[1]+Init
[2]  !QLS
[3]   A:?QLS
[4]    Goto A
[3]   ?HLS /*Comment(1)*/
[4]    Start C_Second /*Comment(2)*/
[5]      B:?Timeout C_Second        Pass
[5]      ?HLS
[6]        Goto B
[5]      ?Otherwise                 Fail(2)
[3]   ?Otherwise                    Fail(1)
```

**Extended Comments:**
(1) IUT enters the Connect State from the Break State and transmit HLS. (Connect_Actions)
(2) In this step, the IUT is in the Connect State, it is going to receive a sequence of HLS to process to the Next State. At this point, The Tester keeps sending QLS to the IUT to see what happen on the IUT. (PC-33)

**Reasons for Failure:**
(1) IUT transmit QLS when it enters the Break State. After TB_Min, it must enter the Connect State and transmit HLS. If the IUT does not transmit QLS followed by HLS then the IUT fails.
(2) When the IUT enters the Connect state, it will enter the Next state after receiving sufficient HLS. The tester remains in the Break state which should cause the IUT to remain in the Connect state forever. If the IUT transmits other than HLS then it is failed.

### 6.2.1.4 Case-ID: Connect_Error

**Purpose:** Verify that the IUT enters the Break
State if the ILS is received before HLS is received in the Connect State.

**Test Setup:** See figure 1.

**Procedure:**

```
[1]+Start_To_Connect /*Comment*/
[2]  !ILS  Start T_Out
[3]   A:?Timeout T_Out              Fail(1)
[3]   ?HLS
[4]    Goto A
[3]   ?QLS                          Pass
[3]   ?Otherwise                    Fail(2)
```

**Extended Comments:** The IUT is in the Connect State (see 6.3.2).


Copyright International Organization for Standardization
Provided by IHS under license with ISO
No reproduction or networking permitted without license from IHS Not for Resale

**Reasons for Failure:**

(1) If the IUT does not enter the Break State within T_Out when ILS is received before HLS is received, the IUT fails. (PC-33, PC-31b)
(2) IUT may either be in the Connect State (not changed to Break State yet) or in the Break State otherwise it is failed.

### 6.2.1.5 Case-ID: To_Next

**Purpose:** Verify that the IUT remains in the Connect State for at least C_Min before entering the Next State.

**Test Setup:** See figure 1.

**Procedure:**

```
[1]+Start_To_Connect
[2]  !HLS  Start C_Min
[3]    A:?Timeout C_Min /*Comment*/
[4]      B:?HLS
[5]        Goto B
[4]      ?ILS                    Pass
[4]      ?Otherwise              Fail(2)
[3]    ?HLS
[4]      Goto A
[3]    ?Otherwise                Fail(1)
```

**Extended Comments:**
IUT enters the Connect State from the Break State and must remain in the Connect State for at least C_Min. (PC-33, PC-34)

**Reasons for Failure:**
(1) When the IUT enters the Connect State, it remains for at least C_Min. If the C_Min timer does not timeout and the IUT does not transmit HLS then the IUT fails.
(2) After C_Min, the IUT may stay in the Connect State or enter the Next State. If the IUT transmits a Line State other than HLS or ILS then the IUT fails.

### 6.2.1.6 Case-ID: Next_0

**Purpose:** Verify that the IUT remains in the Next State for at least TL_Min.

**Test Setup:** See figure 1.

**Procedure:**

```
[1]+Start_To_Next /*Comment*/
[2]  !ILS Start TL_Min
[3]    A:?Timeout TL_Min
[4]      B:?ILS
[5]        Goto B
[4]      ?MLS                    Pass
[4]      ?Otherwise              Fail(2)
[3]    ?ILS
[4]      Goto A
[3]    ?Otherwise                Fail(1)
```

**Extended Comments:** IUT is in the Next State with n=0.

**Reasons for Failure:**
(1) Initially, the IUT is in the Next State, ILS is transmitted for at least TL_Min. After TL_Min, the IUT may remain in the Next or enter the Signal State. If the IUT does not transmit ILS and TL_Min is not expired, then the IUT fails. (PC-44b, Next_Actions)
(2) After TL_Min, the IUT may remain in the Next State or enter the Signal State. If the IUT does not transmit ILS or MLS, then the IUT fails.



Copyright International Organization for Standardization
Provided by IHS under license with ISO
No reproduction or networking permitted without license from IHS
Not for Resale

### 6.2.1.7 Case-ID: Wait_In_Next

**Purpose:** Verify that the IUT will not enter the Signal State until ILS is received for at least LS_Min.

**Test Setup:** See figure 1.

**Procedure:**

```
[1]+Start_To_Next
[2]  !ILS Start LS_Less, Start N_Second
[3]    A:?Timeout LS_Less /*Comment(1)*/
[4]     !MLS /*Comment(2)*/
[5]       B:?Timeout N_Second       Pass
[5]       ?ILS /*Comment(3)*/
[6]         Goto B
[5]       ?QLS                      Pass
[5]       ?Otherwise                Fail(2)
[3]    ?ILS
[4]     Goto A
[3]    ?Otherwise                   Fail(1)
```

**Extended Comments:**
(1) LS_Less is a timer which is set to half the time required for LS_Min (the default value of LS_Less is 0.24 microseconds). It is to verify that the IUT will wait in the Next State without changing to the Signal State (the Tester sends ILS for 0.24 microseconds) unless it receives ILS for at least LS_Min. (0.48 microseconds)
(2) Tester continuously transmits MLS to the IUT.
(3) IUT will stay in the Next State, if ILS is not received for longer than LS_Min.
(PC-44a, PC-44b)

**Reasons for Failure:**
(1) IUT does not remain in the Next State to transmit ILS or LS_Less is not expired.
(2) If the IUT does not receive sufficient ILS, the IUT enters the Next State from the Connect State, it must wait to receive enough ILS. So, if the IUT does not transmit ILS (IUT may not remain in the Next State) and the N_Second timer is not expired then the IUT fails.
(PC-44a, PC-44b)

### 6.2.1.8 Case-ID: Next_Error1

**Purpose:** Verify that the IUT transitions from the Next state to Break, if QLS is received. (PC-41b)

**Test Setup:** See figure 1.

**Procedure:**

```
[1]+Start_To_Next
[2]  !QLS  Start PC_React
[3]    A:?Timeout PC_React       Fail(2)
[3]    ?QLS                      Pass
[3]    ?ILS
[4]     Goto A
[3]    ?Otherwise                Fail(1)
```

**Reasons for Failure:**
(1) IUT does not transmit ILS, QLS and PC_React is not expired.
(2) IUT does not enter the Break State within PC_React when QLS is received. (PC-41b, Next_Error, Break_Actions)

### 6.2.1.9 Case-ID: Next_Error2

**Purpose:** Verify that the IUT transitions from the Next state to Break, if T_Out expires prior to the IUT receiving ILS, with n > zero. (PC-41b)

**Test Setup:** See figure 1.


--`,,```,,,,````-`-`,,`,,`,`,,`---
Copyright International Organization for Standardization
Provided by IHS under license with ISO
No reproduction or networking permitted without license from IHS
Not for Resale

**Procedure:**

```
[1]+To_Next_0 /*Comment*/
[2]  !MLS  Start T_Out
[3]    A:?Timeout T_Out
[4]      ?QLS                    Pass
[4]      ?Otherwise              Fail(2)
[3]    ?ILS
[4]      Goto A
[3]    ?Otherwise                Fail(1)
```

**Extended Comments:** The IUT enters the Next State with n=1.

**Reasons for Failure:**
(1) IUT does not transmit ILS or T_Out is not expired.
(2) IUT does not enter the Break State from Next because ILS has not been received for T_Out and n is greater than zero since entering the Next State. (Next_Error, Break_Actions)

### 6.2.1.10 Case-ID: Signal_Error1

**Purpose:** Verify that the IUT transitions from the Signal state to Break if QLS is received. (PC-51b)

**Test Setup:** See figure 1.

**Procedure:**

```
[1]+Start_To_Next /*Comment(1)*/
[2]  !ILS
[3]    A:?ILS /*Comment(2)*/
[4]      Goto A
[3]    ?MLS /*Comment(3)*/
[4]      !QLS  Start PC_React
[5]        B:?Timeout PC_React     Fail(2)
[5]        ?MLS
[6]          Goto B
[5]        ?QLS                    Pass
[5]        ?Otherwise              Fail(3)
[3]    ?Otherwise                  Fail(1)
```

**Extended Comments:**
(1) IUT is in Next State with n = 0.
(2) Tester keeps receiving ILS from the IUT until the IUT changes to the Signal State and transmits MLS.
(3) IUT enters the Signal State and transmits MLS. (PC-54, T_Val(0), Signal_Actions)

**Reasons for Failure:**
(1) Initially, the IUT is in the Next State, ILS is transmitted. After TL-Min, the IUT enters the Signal State. If the IUT does not transmit ILS, MLS then the IUT fails.
(2) IUT does not enter the Break State while QLS is received for PC_React in the Signal State. (PC-41b, Next_Error, Break_Actions)
(3) IUT does not transmit QLS, MLS or PC_React has not timed out.

### 6.2.1.11 Case-ID: Signal_Error2

**Purpose:** Verify that the IUT transitions from the Signal state to the Break state if the MLS or HLS has not been received for a period T_Out. (PC-51b)

**Test Setup:** See figure 1.



--`,,```,,,,````-`-`,,`,,`,`,,`---
Copyright International Organization for Standardization
Provided by IHS under license with ISO
No reproduction or networking permitted without license from IHS
Not for Resale

**Procedure:**

```
[1]+Start_To_Next /*Comment(1)*/
[2]  !ILS
[3]    A:?ILS /*Comment(2)*/
[4]      Goto A
[3]    ?MLS /*Comment(3)*/
[4]      Start T_Out
[5]        B:?Timeout T_Out
[6]          ?QLS                  Pass
[6]          ?Otherwise            Fail(3)
[5]        ?MLS
[6]          Goto B
[5]        ?Otherwise              Fail(2)
[3]    ?Otherwise                  Fail(1)
```

**Extended Comments:**

(1) IUT enters the Next State with n=0.
(2) Tester keeps receiving ILS until IUT enters the Signal State and transmits MLS.
(3) IUT enters the Signal State and transmits MLS. (PC-54, T_Val(0), Signal_Actions)

**Reasons for Failure:**

(1) Initially, the IUT is in the Next State transmitting ILS for at least TL_Min. The IUT enters the Signal State and transmits MLS. If the IUT does not transmit ILS or MLS, then the IUT fails.
(2) If the IUT does not transmit MLS, the test fails.
(3) If MLS is not received within T_Out, the IUT transitions to the Break State and transmits QLS. If the IUT does not transmit QLS, the test fails. This is a test of the break state response.
(PC-55a, PC-55b, PC-51b)

### 6.2.1.12 Case-ID: To_Pseudo_0

**Purpose:** In this procedure, the Tester enters the Signal State before the IUT does, and the IUT must enter the Signal State later.

**Test Setup:** See figure 1.

**Procedure:**

```
[1]+Start_To_Next
[2]  !ILS Start LS_Min
[3]    A:Timeout LS_Min
[4]      !MLS Start T_Out
[4]        B:?Timeout T_Out        Fail(3)
[5]        ?ILS
[6]         Goto B
[5]        ?MLS                    Pass
[5]        ?Otherwise              Fail(2)
[3]    ?ILS
[4]      Goto A
[3]    ?Otherwise                  Fail(1)
```

**Reasons for Failure:**

(1) Initially, the Tester enters the Next State the same time as the IUT does. After ILS is transmitted for LS_Min, the Tester enters the Signal State without waiting for IUT change. The IUT must enter the Signal State later, if the IUT does not transmit ILS (IUT is not in the Next State) or LS_Min is not expired then the IUT fails. (PC-44a, PC-44b)
(2) IUT does not transmit ILS or MLS (IUT is in the Next State in the beginning of this procedure, then it will enter the Signal State and transmit MLS). (PC-44a, PC-44b, PC-45, Next_Actions, Signal_Actions)
(3) IUT stuck in the Next state.

--`,,```,,,,````-`-`,,`,,`,`,,`---



Copyright International Organization for Standardization
Provided by IHS under license with ISO
No reproduction or networking permitted without license from IHS Not for Resale

### 6.2.2 Port Dependent Tests:

#### 6.2.2.1 Case-ID: A_Next_1

**Purpose:** Verify that the IUT transmits MLS when its port type is A with n=1.

**Test Setup:** See figure 2.

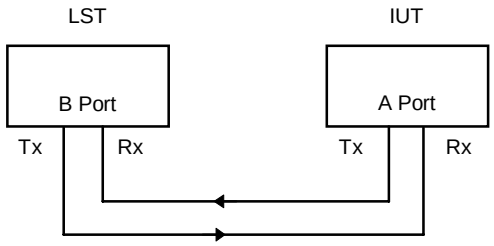


Figure 2 - Tester Configuration for Indicated Cases

**Procedure:**
1]+To_Next_0 /*Comment*/
[2] !ILS
[3] A:?ILS
[4] Goto A
[3] ?MLS Pass
[3] ?Otherwise Fail

**Extended Comments:** IUT is in the Next State with n=1.

**Reasons for Failure:**
At the beginning of this procedure, the IUT is in the Next State and ILS is transmitted. Prior to T_OUT, the IUT transitions to the Signal State and transmits MLS to signal its port type is A or B. If the IUT does not transmit ILS or MLS then the IUT fails. (PC-44a, PC-44b, PC-45) Next_Actions, Signal_Actions)

#### 6.2.2.2 Case-ID: A_Next_2

**Purpose:** Verify that the IUT transmits MLS when its port type is A with n=2.

**Test Setup:** See figure 2.

**Procedure:**
[1]+To_Next_1 /*Comment*/
[2] !ILS
[3] A:?ILS
[4] Goto A
[3] ?MLS Pass
[3] ?Otherwise Fail

**Extended Comments:** IUT is in the Next State with n=2.

**Reasons for Failure:**
The IUT signals MLS when n=2 and its port type is A. If the IUT does not transmit ILS or MLS then the IUT fails. (PC-44a, PC-44b, PC-45, Next_Actions, Signal_Actions).



--`,,```,,,,````-`-`,,`,,`,`,,`---
Copyright International Organization for Standardization
Provided by IHS under license with ISO
No reproduction or networking permitted without license from IHS
Not for Resale

### 6.2.2.3 Case-ID: B_Next_1

**Purpose:** Verify that the IUT transmits MLS when its port type is B with n=1.

**Test Setup:** See figure 3.

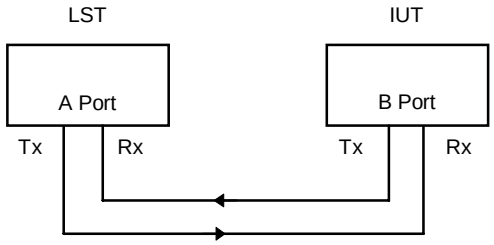


Figure 3 - Tester Configuration for Indicated Cases

**Procedure:**
[1]+To_Next_0 /*Comment*/
[2] !ILS
[3] A:?ILS
[4] Goto A
[3] ?MLS Pass
[3] ?Otherwise Fail

**Extended Comments:** IUT is in the Next State with n=1.

**Reasons for Failure:**
Initially, the IUT is in the Next State with n=1 and ILS is transmitted, the IUT should enter the Signal State and transmit MLS (IUT's port type is B), if not, then the IUT fails. (PC-44a, PC-44b, PC-45, Next_Actions, Signal_Actions)

### 6.2.2.4 Case-ID: B_Next_2

**Purpose:** Verify that the IUT transmits HLS when its port type is B with n=2.

**Test Setup:** See figure 3.

**Procedure:**
[1]+To_Next_1 /*Comment*/
[2] !ILS
[3] A:?ILS
[4] Goto A
[3] ?HLS Pass
[3] ?Otherwise Fail

**Extended Comments:** IUT is in the Next State with n=2.

**Reasons for Failure:**
The IUT signals HLS when n=2 and its port is B. If the IUT does not transmit ILS or HLS then the IUT fails. (PC-44a, PC-44b, PC-45, Next_Actions, Signal_Actions)

### 6.2.2.5 Case-ID: S_Next_1

**Purpose:** Verify that the IUT transmits HLS when its port type is S with n=1.

**Test Setup:** See figure 4.


Copyright International Organization for Standardization
Provided by IHS under license with ISO
No reproduction or networking permitted without license from IHS
Not for Resale

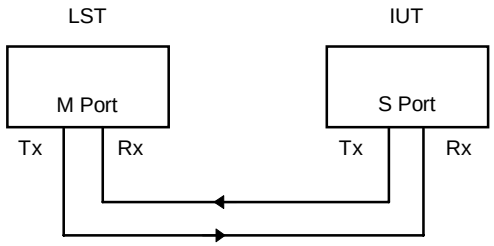


Figure 4 - Tester Configuration for Indicated Cases

**Procedure:**
[1]+To_Next_0 /*Comment*/
[2] !ILS
[3] A:?ILS
[4] Goto A
[3] ?HLS Pass
[3] ?Otherwise Fail

**Extended Comments:** IUT is in the Next State with n=1.

**Reasons for Failure:**
Initially, the IUT is in the Next State and transmitting ILS. The IUT transitions to the Signal State and transmits HLS (IUT's port type is S). If the IUT does not transmit ILS or HLS, then the IUT fails. (PC-44a, PC-44b, PC-45, Next_Actions, Signal_Actions)

### 6.2.2.6 Case-ID: S_Next_2

**Purpose:** Verify that the IUT transmits MLS when its port type is S with n=2.

**Test Setup:** See figure 4.

**Procedure:**
[1]+To_Next_1 /*Comment*/
[2] !ILS
[3] A:?ILS
[4] Goto A
[3] ?MLS Pass
[3] ?Otherwise Fail

**Extended Comments:** IUT is in the Next State with n=2.

**Reasons for Failure:**
IUT must signal MLS when n=2 and its port type is S. If the IUT does not transmit ILS or MLS, then the IUT fails. (PC-44a, PC-44b, PC-45, Next_Actions, Signal_Actions)



Copyright International Organization for Standardization
Provided by IHS under license with ISO
No reproduction or networking permitted without license from IHS
Not for Resale

### 6.2.2.7 Case-ID: M_Next_1

**Purpose:** Verify that the IUT transmits HLS when its port type is M with n=1.

**Test Setup:** See figure 5.

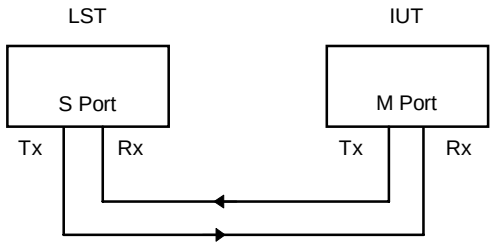


Figure 5 - Tester Configuration for Indicated Cases

**Procedure:**
[1]+To_Next_0 /*Comment*/
[2] !ILS
[3] A:?ILS
[4] Goto A
[3] ?HLS Pass
[3] ?Otherwise Fail

**Extended Comments:** IUT is in the Next State with n=1.

**Reasons for Failure:**
Initially, the IUT is in the Next State and transmitting ILS. The IUT transitions to the Signal State and transmits HLS. If the IUT does not transmit ILS or HLS then the IUT fails. (PC-44a, PC-44b, PC-45, Next_Actions, Signal_Actions)

### 6.2.2.8 Case-ID: M_Next_2

**Purpose:** Verify that the IUT transmits HLS when its port type is M with n=2.

**Test Setup:** See figure 5.

**Procedure:**
[1]+To_Next_1 /*Comment*/
[2] !ILS
[3] A:?ILS
[4] Goto A
[3] ?HLS Pass
[3] ?Otherwise Fail

**Extended Comments:** IUT is in the Next State with n=2.

**Reasons for Failure:**
IUT signals HLS when n=2 and its port type is M. If the IUT does not transmit ILS or HLS, then the IUT fails. (PC-44a, PC-44b, PC-45, Next_Actions, Signal_Actions)

### 6.2.3 Connection Policy tests:

### 6.2.3.1 Case-ID: Valid_Connection

**Purpose:** Verify that the IUT transmits HLS to indicate the station has a policy which allows the connection for the configuration listed below.
**Test Setup:** A to A, A to B, A to S, B to A, B to B, B to S, S to A, S to B, S to S, S to M, M to A, M to B, M to S, A to M, B to M.


Copyright International Organization for Standardization
Provided by IHS under license with ISO
No reproduction or networking permitted without license from IHS Not for Resale

**Procedure:**
[1]+To_Next_2 /*Comment*/
[2] !ILS
[3] A:?ILS
[4] Goto A
[3] ?HLS Pass
[3] ?Otherwise Fail

**Extended Comments:** IUT is in the Next State with n=3.

**Reasons for Failure:**
Initially, the IUT is in the Next State with n=3 and ILS transmitting. PCM Pseudo Code initiates the transitions from Next_Action to Signal state and HLS is transmitted to signal the accepted connection (PC-45). If the IUT does not transmit ILS or HLS then the IUT fails. (PC-44a, PC-44b, PC-45, Next_Actions, Signal_Actions)

### 6.2.3.2 Case-ID: Undesirable_Connection

**Purpose:** Verify that the IUT transmits MLS to indicate the station has a policy which rejects the connection for the configuration listed below.
**Test Setup:** A to A, A to B, A to S, B to A, B to B, B to S, S to A, S to B, S to S, S to M, M to A, M to B, M to S, A to M, B to M.

**Procedure:**
[1]+To_Next_2 /*Comment*/
[2] !ILS
[3] A:?ILS
[4] Goto A
[3] ?MLS Pass
[3] ?Otherwise Fail

**Extended Comments:** IUT is in the Next State with n=3.

**Reasons for Failure:**
Initially, the IUT is in the Next State with n=3 and ILS is transmitting. PCM Pseudo Code initiates the transitions from Next_Action to Signal state and MLS is transmitted to signal the un-accepted connection (PC-45). If the IUT does not transmit ILS or MLS then the IUT fails. (PC-44a, PC-44b, PC-45, Next_Actions, Signal_Actions)

### 6.2.3.3 Case-ID: Illegal_Connection

**Purpose:** Verify that the IUT transmits MLS to indicate an Illegal Connection when its port type is M, the Tester's port type is M and n = 3.

**Procedure:**
[1]+To_Next_2l /*Comment*/
[2] !ILS
[3] A:?ILS
[4] Goto A
[3] ?MLS Pass
[3] ?Otherwise Fail

**Extended Comments:** IUT is in the Next State with n=3.

**Reasons for Failure:**
Initially, the IUT is in the Next State with n=3 and transmitting ILS. MLS is transmitted to indicate that the Connection is illegal. If the IUT does not transmit ILS or MLS then the IUT fails. (PC-44a, PC-44b, PC-45, Next_Actions, Signal_Actions)



Copyright International Organization for Standardization
Provided by IHS under license with ISO
No reproduction or networking permitted without license from IHS Not for Resale

### 6.2.4 Required Link Confidence Duration Tests

#### 6.2.4.1 Short Link Confidence Test

##### 6.2.4.1.1 Case-ID: SET_Duration_S1

**Purpose:** Verify that the IUT transmits MLS to indicate the Short, Medium LCT Duration or HLS to indicate a Long LCT Duration with n=4 for the configuration listed below.

**Test Setup:** All configurations except M to M.

**Procedure:**

```
[1]+To_Next_3 /*Comment*/
[2]  !ILS
[3]    A:?ILS
[4]      Goto A
[3]    ?MLS              Pass
[3]    ?HLS              Pass
[3]    ?Otherwise        Fail
```

**Extended Comments:** IUT is in the Next State with n=4.

**Reasons for Failure:**
Initially, the IUT is in the Next State with n=4 and ILS is transmitted. After a little while, PCM Pseudo Code is performed and MLS is signaled to indicate the Short or Medium LCT Duration, or HLS is signaled to indicate the Long LCT Duration. If the IUT does not transmit ILS, HLS or MLS then the IUT fails. (PC-44a, PC-44b, PC-45, Next_Actions, Signal_Actions)

##### 6.2.4.1.2 Case-ID: SET_Duration_S2

**Purpose:** Verify that the IUT transmits MLS to indicate the Short, Medium LCT Duration or HLS to indicate a Long LCT Duration with n=5 for the configuration listed below.

**Test Setup:** All configurations except M to M.

**Procedure:**

```
[1]+To_Next_3 /*Comment 1*/
[2]  !ILS
[3]    A:?ILS
[4]      Goto A
[3]    ?MLS /*Comment 2*/
[4]      !MLS
[5]        B:?MLS
[6]          Goto B
[5]        ?ILS /*Comment 3*/
[6]          !ILS
[7]            C:?ILS
[8]              Goto C
[7]            ?MLS                Pass
[7]            ?HLS                Pass
[7]            ?Otherwise          Fail(4)
[5]        ?Otherwise              Fail(2)
[3]    ?HLS /*Comment 4*/
[4]      !HLS
[5]        D:?HLS
[6]          Goto D
[5]        ?ILS /*Comment 3*/
[6]          !ILS
[7]            E:?ILS
```


Copyright International Organization for Standardization
Provided by IHS under license with ISO
No reproduction or networking permitted without license from IHS
Not for Resale

```
[8]          Goto E
[7]        ?MLS                Pass
[7]        ?HLS                Pass
[7]        ?Otherwise          Fail(4)
[5]      ?Otherwise            Fail(3)
[3]   ?Otherwise               Fail(1)
```

**Extended Comments:**
(1) IUT is in the Next State with n=4.
(2) IUT transmits MLS to indicate Short or Medium LCT Duration.
(3) IUT ends in the Next State with n=5.
(4) IUT transmits HLS to indicate Long LCT Duration.

**Reasons for Failure:**
(1) Initially, the IUT is in the Next State with n equal 4 and transmitting ILS. After a little while, IUT enters Signal State, PCM Pseudo Code is performed and MLS is signaled to indicate the Short or Medium LCT Duration, or HLS is signaled to indicate a Long LCT Duration. So, if the IUT does not transmit ILS, HLS or MLS then the IUT fails. (PC-44a, PC-44b, PC-45, Next_Actions, Signal_Actions)
(2) The legal Line States which IUT transmit are MLS (IUT remains in Signal State) or ILS (IUT enters Next State), if IUT does not transmit ILS or MLS then the IUT fails.
(3) The legal Line States which IUT transmit are ILS or HLS, if IUT does not transmit ILS or HLS, then the IUT fails.
(4) IUT does not transmit ILS or MLS.

### 6.2.4.2 Medium Link Confidence Test

#### 6.2.4.2.1 Case-ID: SET_Duration_M1

**Purpose:** Verify that the IUT transmits MLS to indicate a Medium LCT Duration or HLS to indicate a Long LCT Duration with n = 4 for the configuration listed below.

**Test Setup:** All configurations except M to M.

**Procedure:**

```
[1]+Break_In_Next7 /*Comment(1)*/
[2] +To_Next3 /*Comment(2)*/
[3]   !ILS
[4]    A:?ILS
[5]      Goto A
[4]    ?MLS                    Pass
[4]    ?HLS                    Pass
[4]    ?Otherwise              Fail
```

**Extended Comments:**
(1) IUT enters the Break State while the last Link Confidence Test is failed, the PC_LCT_Fail is incr-eased.
(2) IUT enters the Next State with n=4.

**Reasons for Failure:**
IUT has restarted from the last Link Confidence Test and retained the LCT failure history. So, when the IUT processes up to the Next State with n=4, it signals MLS to indicate the LCT Duration shall be Medium, or signals HLS to indicate the LCT Duration shall be Long. If the IUT does not transmit ILS or MLS then the IUT fails. (PC-44a, PC-44b, PC-45, Next_Actions, Signal_Actions)

#### 6.2.4.2.2 Case-ID: Set_Duration_M2

**Purpose:** Verify that the IUT transmits HLS or MLS to indicate a Medium or Long Link Confidence Test Duration with n=5 for the configuration listed below.

**Test Setup:** All configurations except M to M.



Copyright International Organization for Standardization
Provided by IHS under license with ISO
No reproduction or networking permitted without license from IHS Not for Resale

**Procedure:**

```
[1]+Break_In_Next7 /*Comment(1)*/
[2] +To_Next_3 /*Comment(2)*/
[3]  !ILS
[4]   A:?ILS
[5]    Goto A
[4]   ?MLS /*Comment(3)*/
[5]    !MLS
[6]     B:?MLS
[7]      Goto B
[6]     ?ILS /*Comment(4)*/
[7]      !ILS
[8]       C:?ILS
[9]        Goto C
[8]       ?HLS                    Pass
[8]       ?Otherwise              Fail(2)
[4]   ?HLS /*Comment(5)*/
[5]    !HLS
[6]     D:?HLS
[7]      Goto D
[6]     ?ILS /*Comment(3)*/
[7]      !ILS
[8]       E:?ILS
[9]        Goto E
[8]       ?MLS                    Pass
[8]       ?HLS                    Pass
[8]       ?Otherwise              Fail(4)
[6]     ?Otherwise                Fail(3)
[4]   ?Otherwise          Fail(1)
```

**Extended Comments:**

(1) IUT enters the Break State while the Last Link Confidence Test is failed. The PC_LCT_Fail is increased.
(2) IUT is in the Next State with n=4.
(3) IUT transmits MLS to indicate Medium LCT Duration.
(4) IUT ends in the Next State with n=5.
(5) IUT transmits HLS to indicate Long LCT Duration.

**Reasons for Failure:**

(1) At the beginning of this procedure, the IUT is in the Next State with n = 4, ILS is transmitted. After a little while, IUT enters Signal State, PCM Pseudo is performed and MLS is signaled to indicate the LCT Duration is Medium or HLS is signaled to indicate the LCT Duration is Long. If the IUT does not transmit ILS, MLS or HLS then the IUT fails. (PC-44a, PC-44b, PC-45, Next_Actions, Signal_Actions)
(2) The legal Line States which IUT transmit are HLS (IUT remains in Signal State) or ILS (IUT enters Next State). If IUT does not transmit ILS or HLS then the IUT fails.
(3) The legal Line States which IUT transmit are ILS or HLS, if IUT does not transmit ILS or HLS, then the IUT fails.
(4) IUT does not transmit ILS or MLS.

### 6.2.4.3 Long Link Confidence Test

#### 6.2.4.3.1 Case-ID: Set_Duration_L1

**Purpose:** Verify that the IUT transmits HLS to indicate a Long LCT duration with n=4 for the configuration listed below.

**Test Setup:** All configurations except M to M.


Copyright International Organization for Standardization
Provided by IHS under license with ISO
No reproduction or networking permitted without license from IHS
Not for Resale

**Procedure:**
[1]+Break_In_Active /*Comment(1)*/
[2] +To_Next_3 /*Comment(2)*/
[3] !ILS
[4] A:?ILS
[5] Goto A
[4] ?HLS Pass
[4] ?Otherwise Fail

**Extended Comments:**
(1) IUT enters Break from Active and sets the LEM_Fail to indicate Link Error Rate is greater than LER_Cutoff.
(2) IUT is in the Next State with n=4.

**Reasons for Failure:**
IUT must signal HLS to indicate the Long LCT Duration. If the IUT does not transmit ILS or HLS then the IUT fails. (PC-44a, PC-44b, PC-45, Next_Actions, Signal_Actions)

#### 6.2.4.3.2 Case-ID: Set_Duration_L2

**Purpose:** Verify that the IUT transmits MLS to indicate a Long LCT Duration with n=5 for the configuration listed below.

**Test Setup:** All configurations except M to M.

**Procedure:**
[1]+To_Next_4L/*Comment*/
[2] !ILS
[3] A:?ILS
[4] Goto A
[3] ?MLS Pass
[3] ?HLS Pass
[3] ?Otherwise Fail

**Extended Comments:** IUT is in the Next State with n=5.

**Reasons for Failure:**
At the beginning of this procedure, the IUT is in the Next State with n=5 and ILS is transmitted. After a little while, PCM Pseudo Code is performed, a MLS is signaled to indicate the LCT Duration is Long. If the IUT does not transmit ILS, MLS or HLS then the IUT fails. (PC-44a, PC-44b, PC-45, Next_Actions, Signal_Actions)

### 6.2.4.4 Extended Link Confidence Test (Illegal Connections)

#### 6.2.4.4.1 Case-ID: Set_Duration_E1

**Purpose:** Verify that the IUT transmits HLS indicating an Extended LCT Duration for illegal connections.

**Test Setup:** M to M.

**Procedure:**
[1]+To_Next_MM3 /*Comment*/
[2] !ILS
[3] A:?ILS
[4] Goto A
[3] ?HLS Pass
[3] ?Otherwise Fail

**Extended Comments:** IUT is in the Next State with n=4.

**Reasons for Failure:**
At the beginning of this procedure, the IUT is in the Next State with n=4 and ILS is transmitted. After a little while, PCM Pseudo Code is performed and HLS is signaled to indicate Extended LCT Duration. If the IUT does not transmit ILS or HLS then the IUT fails. (PC-44a, PC-44b, PC-45, Next_Actions, Signal_Actions)



Copyright International Organization for Standardization
Provided by IHS under license with ISO
No reproduction or networking permitted without license from IHS Not for Resale

#### 6.2.4.4.2 Case-ID: Set_Duration_E2

**Purpose:** Verify that the IUT transmits HLS indicating an Extended LCT Duration for illegal connections.

**Test Setup:** M to M.

**Procedure:**
[1]+To_Next_4E /*Comment*/
[2] !ILS
[3] A:?ILS
[4] Goto A
[3] ?HLS Pass
[3] ?Otherwise Fail

**Extended Comments:** IUT is in the Next State with n=5.

**Reasons for Failure:**
Initially, the IUT is in the Next State with n=5 and transmitting ILS. If the IUT does not transmit ILS or HLS then the IUT fails.

### 6.2.5 Link Confidence Tests:

### 6.2.5.1 Normal Case (Test Success):

#### 6.2.5.1.1 Case-ID: In_Next_6

Perform test case 6.2.5.1.1.1, In_Next_6_With_MAC, only if IUT offers a MAC for the LCT as entered in the PICS/PIXIT entry. Perform test case 6.2.5.1.1.2, In_Next_6_Without_MAC, only if IUT does not offer a MAC for the LCT as entered in the PICS/PIXIT entry.

#### 6.2.5.1.1.1 Case-ID:In_Next_6_With_MAC

**Purpose:** Verify that the IUT transmits HLS to indicate that its MAC is available for the LCT.

**Test Setup:** All configurations.

**Procedure:**
[1]+To_Next_5S /*Comment*/
[2] !ILS
[3] A:?ILS
[4] Goto A
[3] ?HLS Pass
[3] ?Otherwise Fail

**Extended Comments:**
IUT is in the Next State with n=6.

**Reasons for Failure:**
At the beginning of this procedure, the IUT is in the Next State with n=6 and ILS is transmitted. After a little while, PCM Pseudo Code is performed and HLS is signaled to indicate that its MAC is available for LCT. If the IUT does not transmit ILS or HLS then the IUT fails. (PC-44a, PC-44b, PC-45, Next_Actions, Signal_Actions)

#### 6.2.5.1.1.2 Case-ID: In_Next_6_Without_MAC

**Purpose**: Verify that the IUT transmits MLS to indicate that its MAC is not available for the LCT.

**Test Setup:** All configurations.

**Procedure:**
[1]+To_Next_5S /*Comment*/
[2] !ILS
[3] A:?ILS
[4] Goto A
[3] ?MLS Pass
[3] ?Otherwise Fail


Copyright International Organization for Standardization
Provided by IHS under license with ISO
No reproduction or networking permitted without license from IHS Not for Resale

**Extended Comments:**
IUT is in the Next State with n=6.

**Reasons for Failure:**
At the beginning of this procedure, the IUT is in the Next State with n=6 and ILS is transmitted. After a little while, PCM Pseudo Code is performed and MLS is signaled to indicate that its MAC is not available for LCT. If the IUT does not transmit ILS or MLS then the IUT fails. (PC-44a, PC-44b, PC-45, Next_Actions, Signal_Actions)

### 6.2.5.1.2 Case-ID: Short_LCT_1

**Purpose:** Verify that the IUT performs the Short LCT with ILS, if neither IUT nor Tester has history of excessive link errors and PC_LCT_Fail = 0. (In this case, neither IUT nor Tester has a MAC available for the LCT)

**Test Setup:** All configurations except M to M.

**Procedure:**

```
[1]+No_MAC_6S /*Comment(1)*/
[2]  !ILS Start TL_Min
[3]    A:?Timeout TL_Min /*Comment(2)*/
[4]     Start LC_Short
[5]       B:?Timeout LC_Short/*Comment(3)*/
[6]         C:?ILS
[7]          !ILS
[8]           Goto C
[6]         ?ALS
[7]          !Repeat /*See Note*/
[8]           Goto C
[6]         ?MLS                    Pass
[6]         ?HLS                    Inconclusive
[6]         ?Otherwise              Fail(3)
[5]       ?ILS
[6]        !ILS
[7]         Goto B
[5]       ?ALS
[6]        !Repeat
[7]         Goto B
[5]       ?Otherwise              Fail(2)
[3]   ?ILS
[4]    Goto A
[3]   ?Otherwise                  Fail(1)
```

**Note:** The !Repeat operation is the normal operation of PHY when it repeats symbols. PHY repeats symbols only when its input is in ALS. When the !Repeat statement is executed, the Tester transmits each symbol it receives while the input is in ALS until the input enters another state. Specifically, ALS begins with the symbol sequence JK, which is repeated. Following the JK any of the symbols 0, 1, 2, 3, 4, 5, 6, 7, 8, 9, A, B, C, D, E, F, T, R or S maintain the ALS and are repeated when received. The symbol pair JK, if received in the symbol sequence, also maintains ALS and is repeated. If an Idle symbol is received, ALS is terminated and the Idle is not repeated. If Halt, Quiet, any Violation symbol, a K symbol not preceded by a J symbol, or a J symbol not followed by a K are received, ALS is terminated, and the input is no longer repeated by the !Repeat operation, which then transmits four successive Halt symbols before terminating its operation.

**Extended Comments:**
(1) IUT is in the Next State with n=7.
(2) The Receive Pseudo Code processing may start when the IUT stays in the Next State and ILS is received for at least TL_Min. (PC-44a, PC-44b)
(3) When the IUT performs Short LCT, ILS shall be sent for at least LC_Short. (PC-44b, PC-44c, PC-44d, PC_RCode(7)_Actions)



Copyright International Organization for Standardization
Provided by IHS under license with ISO
No reproduction or networking permitted without license from IHS
Not for Resale

**Reasons for Failure:**
(1) IUT does not transmit ILS or TL_Min is not expired.
(2) IUT does not transmit ILS, ALS or LC_Short is not expired.
(3) IUT does not transmit ILS, ALS, MLS or HLS.

### 6.2.5.1.3 Case-ID: Short_LCT_2

**Purpose:** Verify that the IUT performs Short Link Confidence Test with PDUs, if there is no history of excessive link errors and PC_LCT_Fail = 0. (This case is performed only when the IUT has at least a MAC available for the LCT)

**Test Setup:** All configurations except M to M.

**Procedure:**

```
[1]+IUT_MAC_6S       /*Comment(1)*/
[2]  !ILS Start T_Out /*Comment(2)*/
[3]   A:?Timeout T_Out              Fail(1)
[3]   ?ILS
[4]    Goto A
[3]   ?ALS    /*Comment(3)*/
[4]    Start LC_Short
[5]     !Repeat /*See Note*/
[6]       B:?Timeout LC_Short
[7]         C:?ALS
[8]           !Repeat
[9]             Goto C
[7]         ?ILS
[8]           !ILS
[9]             Goto C
[7]         ?MLS                    Pass
[7]         ?HLS                    Inconclusive
[7]         ?Otherwise              Fail(4)
[6]       ?ALS
[7]         !Repeat
[8]           Goto B
[6]       ?ILS
[7]         !ILS
[8]           Goto B
[6]       ?Otherwise                Fail(3)
[3]   ?Otherwise                    Fail(2)
```

**Note:** See note of 6.2.5.1.2.

**Extended Comments:**
(1) IUT is in the Next State with n=7.
(2) Tester continuously transmits ILS and starts Timer T_Out. Because if n = 7, and the IUT remains in the Next State for longer than T_Out then the IUT fails. (Next_Errors)
(3) After ILS is received for at least TL_Min, the IUT must process PC_RCode(7)_Actions, sends out its PDUs (ALS) during the Link Confidence Test. (T_Val(6), PC_RCode(7)_Actions)

**Reasons for Failure:**
(1) The Link Confidence Test shall be performed after the IUT enters the Next State with n=7 and ILS is received for at least TL_Min but not longer than T_Out. (PC-44a, PC-44b, PC-44c, PC-41b)
(2) At the beginning of this procedure, the IUT is in the Next State, ILS is transmitted. After a little while, the IUT performs the Link Confidence Test, a sequence of PDU (ALS) is sent. If the IUT does not send ILS or ALS then the IUT fails.
(3) IUT must send PDUs (ALS) for at least LC_Short (default: 50 milliseconds). If the IUT does not send ILS or ALS within LC_Short then the IUT fails.
(4) IUT does not send ALS, ILS, MLS or HLS.


Copyright International Organization for Standardization
Provided by IHS under license with ISO
No reproduction or networking permitted without license from IHS Not for Resale

#### 6.2.5.1.4 Case-ID: Medium_LCT_1

**Purpose:** Verify that the IUT performs Medium LCT with ILS, when PC_LCT_Fail is greater than zero. (This case is performed only when neither IUT nor Tester has a MAC available for the LCT)

**Test Setup:** All configurations except M to M.

**Procedure:**

```
[1]+No_MAC_6M /*Comment(1)*/
[2] !ILS Start TL_Min
[3]  A:?Timeout TL_Min /*Comment(2)*/
[4]   Start LC_Medium
[5]    B:?Timeout LC_Medium/*Comment(3)*/
[6]     C:?ILS
[7]      !ILS
[8]       Goto C
[6]     ?ALS
[7]      !Repeat /*See Note*/
[8]       Goto C
[6]     ?MLS                    Pass
[6]     ?HLS                    Inconclusive
[6]     ?Otherwise              Fail(3)
[5]    ?ILS
[6]     !ILS
[7]      Goto B
[5]    ?ALS
[6]     !Repeat
[7]      Goto B
[5]    ?Otherwise              Fail(2)
[3]  ?ILS
[4]   Goto A
[3]  ?Otherwise                Fail(1)
```

**Note:** See note of 6.2.5.1.2.

**Extended Comments:**
(1) IUT is in the Next State with n=7.
(2) The Received Pseudo Code is performed while the IUT stays in the Next State with ILS is received for at least TL_Min. (PC-44a, PC-44b)
(3) When the IUT performs Medium LCT, ILS shall be sent for at least LC_Medium. (PC-44b, PC-44c, PC-44d, PC_RCode(7)_Actions)

**Reasons for Failure:**
(1) IUT does not transmit ILS or TL_Min is not expired.
(2) IUT does not transmit ILS, ALS or LC_Medium is not expired.
(3) IUT does not transmit ILS, ALS, MLS or HLS.

#### 6.2.5.1.5 Case-ID: Medium_LCT_2

**Purpose:** Verify that the IUT performs Medium LCT with PDUs when PC_LCT_Fail is greater than zero. (This case is performed only when IUT has at least a MAC available for the LCT)

**Test Setup:** All configurations except M to M.

**Procedure:**

```
[1]+IUT_MAC_6M /*Comment(1)*/
[2]  !ILS Start T_Out     /*Comment(2)*/
[3]    A:?Timeout T_Out              Fail(1)
[3]    ?ILS
[4]     Goto A
[3]    ?ALS    /*Comment(3)*/
[4]     Start LC_Medium
```



Copyright International Organization for Standardization
Provided by IHS under license with ISO
No reproduction or networking permitted without license from IHS Not for Resale

```
[5]      !Repeat /*See Note*/
[6]        B:?Timeout LC_Medium
[7]          C:?ALS
[8]            !Repeat
[9]              Goto C
[7]          ?ILS
[8]            !ILS
[9]              Goto C
[7]          ?MLS                  Pass
[7]          ?HLS                  Inconclusive
[7]          ?Otherwise            Fail(4)
[6]        ?ALS
[7]          !Repeat
[8]            Goto B
[6]        ?ILS
[7]          !ILS
[8]            Goto B
[6]        ?Otherwise              Fail(3)
[3]   ?Otherwise                   Fail(2)
```

**Note:** See note of 6.2.5.1.2.

**Extended Comments:**
(1) This procedure is to test that the IUT performs the Medium LCT when PC_LCT_Fail is greater than zero. The function IUT_MAC_6M has included all the required steps from when the IUT was turned on, processed to the Link Confidence Test, restarted and went on until the Next State with n = 7. (Link Confidence Test Actions)
(2) IUT must not remain in the Next State for longer than T_Out. (PC-41b, PC-44a, PC-44b)
(3) IUT will transmit PDUs (ALS) in the Link
Confidence Test duration.

**Reasons for Failure:**
(1) The Link Confidence Test shall be performed after IUT enters the Next State with n=7 and ILS is received for at least TL_Min but not longer than T_Out. (PC-41b, PC-44a, PC-44b)
(2) At the beginning of this procedure, the IUT is in the Next State, ILS is transmitted. After a little while, the IUT performs the Link Confidence Test, PDUs (ALS) are transmitted. If the IUT does not transmit ALS or ILS then the IUT fails.
(3) IUT must perform the Link Confidence Test for at least LC_Medium, if the IUT does not transmit ALS, ILS or LC_Medium is not expired then the IUT fails.
(4) IUT does not transmit ILS, ALS, MLS or HLS.

### 6.2.5.1.6 Case-ID: Long_LCT_1

**Purpose:** Verify that the IUT performs the Long LCT with ILS while a link has been rejected due to an excessive Link Error Rate. (This case is performed only when neither IUT nor Tester has a MAC available for the LCT).

**Test Setup:** All configurations except M to M.

**Procedure:**

```
[1]+No_MAC_6L /*Comment(1)*/
[2]  !ILS Start TL_Min
[3]    A:?Timeout TL_Min /*Comment(2)*/
[4]      Start LC_Long
[5]        B:?Timeout LC_Long /*Comment(3)*/
[6]          C:?ILS
[7]           !ILS
[8]             Goto C
[6]          ?ALS
[7]           !Repeat /*See Note*/
[8]             Goto C
[6]          ?MLS                  Pass
```


Copyright International Organization for Standardization
Provided by IHS under license with ISO
No reproduction or networking permitted without license from IHS Not for Resale

```
[6]       ?HLS                    Inconclusive
[6]       ?Otherwise              Fail(3)
[5]     ?ILS
[6]      !ILS
[7]       Goto B
[5]     ?ALS
[6]      !Repeat
[7]       Goto B
[5]     ?Otherwise                Fail(2)
[3]  ?ILS
[4]    Goto A
[3]  ?Otherwise                  Fail(1)
```

**Note:** See note 6.2.5.1.2.

**Extended Comments:**
(1) IUT is in the Next State with n=7.
(2) The Received Pseudo Code is performed while IUT stays in the Next State with ILS is received for at least TL_Min. (PC-44a, PC-44b)
(3) When the IUT performs Long LCT, ILS shall be sent for at least LC_Long. (PC-44b, PC-44c, PC-44d, PC_RCode(7)_Actions)

**Reasons for Failure:**
(1) IUT does not transmit ILS or TL_Min is not expired.
(2) IUT does not transmit ILS, ALS or LC_Long is not expired.
(3) IUT does not transmit ILS, ALS, MLS or HLS.

### 6.2.5.1.7 Case-ID: Long_LCT_2

**Purpose:** Verify that the IUT performs the Long LCT with PDUs when a link has been rejected due to an excessive Link Error Rate. (This case is performed only when IUT has at least a MAC available for the LCT)

**Test Setup:** All configurations except M to M.

**Procedure:**

```
[1]+IUT_MAC_6L /*Comment(1)*/
[2]  !ILS Start T_Out /*Comment(2)*/
[3]   A:?Timeout T_Out            Fail(1)
[3]   ?ILS
[4]    Goto A
[3]   ?ALS /*Comment(3)*/
[4]    Start LC_Long
[5]     !Repeat /*See Note*/
[6]       B:?Timeout LC_Long
[7]         C:?ALS
[8]          !Repeat
[9]            Goto C
[7]         ?ILS
[8]          !ILS
[9]            Goto C
[7]         ?MLS                  Pass
[7]         ?HLS                  Inconclusive
[7]         ?Otherwise            Fail(4)
[6]       ?ALS
[7]         !Repeat
[8]           Goto B
[6]       ?ILS
[7]         !ILS
[8]           Goto B
[6]       ?Otherwise              Fail(3)
[3]  ?Otherwise                   Fail(2)
```

**Note:** See note of 6.2.5.1.2.



Copyright International Organization for Standardization
Provided by IHS under license with ISO
No reproduction or networking permitted without license from IHS
Not for Resale

**Extended Comments:**
(1) This procedure is to test that the IUT performs the Long LCT when the link has been rejected due to an excessive Link Error Rate. The function IUT_MAC_6L has included all the steps from when the IUT was turned on, processed to the Active State, restarted when an excessive Link Error Rate was occurred and went on until the Next State with n=7.
(2) IUT must not remain in the Next State for longer than T_Out. (PC-41b, PC-44a, PC-44b)
(3) IUT will transmit PDUs (ALS) in the Link Confidence Test procedure.

**Reasons for Failure:**
(1) The Link Confidence Test must be performed after the IUT enters the Next State with n=7 and ILS is received for at least TL_Min but not longer than T_Out. (PC-41b, PC-44a, PC-44b)
(2) At the beginning of this procedure, the IUT is in the Next State, ILS is transmitted. After a little while, IUT performs the Link Confidence Test, PDUs (ALS) are transmitted. If the IUT does not transmit ALS or ILS then the IUT fails.
(3) IUT must perform the Link Confidence Test for at least LC_Long, if the IUT does not transmit ALS, ILS or LC_Long is not expired then the IUT fails.
(4) IUT does not transmit ILS, MLS, ALS or HLS.

### 6.2.5.1.8 Case-ID: Extended_LCT_1

**Purpose:** Verify that the IUT performs the Extended LCT with ILS and signals MLS to indicate the test is passed. (This case is used when neither IUT nor Tester has a MAC available for the LCT.)

**Test Setup:** M to M.

**Procedure:**

```
[1]+No_MAC_6E
[2]  !ILS Start TL_Min
[3]   A:?Timeout TL_Min
[4]    Start LC_Extended
[5]     B:?Timeout LC_Extended
[6]      C:?ILS
[7]       !ILS
[8]        Goto C
[6]      ?ALS
[7]       !Repeat /*See Note*/
[8]        Goto C
[6]      ?MLS                    Pass
[6]      ?HLSInconclusive
[6]      ?Otherwise              Fail(3)
[5]     ?ILS
[6]      !ILS
[7]       Goto B
[5]     ?ALS
[6]      !Repeat
[7]       Goto B
[5]     ?Otherwise              Fail(2)
[3]   ?ILS
[4]    Goto A
[3]   ?Otherwise                Fail(1)
```

**Note:** See note of 6.2.5.1.2.

**Reasons for Failure:**
(1) IUT does not transmit ILS or TL_Min is not expired.
(2) IUT does not transmit ILS, ALS or LC_Extended is not expired.
(3) IUT does not transmit ILS, ALS, MLS or HLS.


Copyright International Organization for Standardization
Provided by IHS under license with ISO
No reproduction or networking permitted without license from IHS Not for Resale

#### 6.2.5.1.9 Case-ID: Extended_LCT_2

**Purpose:** Verify that the IUT performs Extended Link Confidence Test with PDUs and signals MLS to indicate the LCT test is passed. (This case is performed only when IUT has at least a MAC available for the LCT)

**Test Setup:** M to M.

**Procedure:**

```
[1]+IUT_MAC_6E
[2] !ILS Start T_Out
[3]  A:?Timeout T_Out                Fail(1)
[3]  ?ILS
[4]   Goto A
[3]  ?ALS
[4]   Start LC_Extended
[5]    !Repeat /*See Note*/
[6]     B:?Timeout LC_Extended
[7]      C:?ILS
[8]       !ILS
[9]        Goto C
[7]      ?ALS
[8]       !Repeat
[9]        Goto C
[7]      ?MLS                        Pass
[7]      ?HLS                        Inconclusive
[7]      ?Otherwise                  Fail(4)
[6]     ?ALS
[7]      !Repeat
[8]       Goto B
[6]     ?ILS
[7]      !ILS
[8]       Goto B
[6]     ?Otherwise                  Fail(3)
[3]  ?Otherwise                      Fail(2)
```

**Note:** See note of 6.2.5.1.2.

**Reasons of Failure:**
(1) The Link Confidence Test shall be performed after the IUT enters the Next State with n=7 and ILS is received for at least TL_Min but not longer than T_Out.
(2) At the beginning of this state, the IUT is in the Next State, ILS is transmitted. After a little while, the IUT performs Link Confidence Test, a sequence of PDUs (ALS) is sent. If the IUT does not send ILS or ALS then the IUT fails.
(3) IUT must send PDUs (ALS) for at least LC_Extended, if the IUT does not send ILS, ALS or LC_-Extended is not expired then the IUT fails.
(4) IUT does not transmit ILS, ALS, MLS or HLS.

### 6.2.5.2 Abnormal Case (Test Failed):

#### 6.2.5.2.1 Case-ID: LCT_Fail_1

**Purpose:** Verify that the IUT performs Short LCT with ERR and transmits HLS to indicate the LCT fail. (This case is performed only when neither IUT nor Tester has a MAC available for the LCT.)

**Test Setup:** All configurations except M to M.

**Procedure:**

```
[1]+No_MAC_6S          /*Comment(1)*/
[2]  !ILS Start TL_Min
[3]    A:?Timeout TL_Min /*Comment(2)*/
[4]     !ERR Start LC_Short, LC_Long
          /*Comment(3)*/
[5]       B:?Timeout LC_Short
```

--`,,```,,,,````-`-`,,`,,`,`,,`---



Copyright International Organization for Standardization
Provided by IHS under license with ISO
No reproduction or networking permitted without license from IHS Not for Resale

```
[6]       C:?Timeout LC_Long          Fail(3)
[6]       ?ILS
[7]         Goto C
[6]       ?ALS
[7]         Goto C
[6]       ?HLS                        Pass
[6]       ?Otherwise                  Fail(4)
[5]     ?ILS
[6]       Goto B
[5]     ?ALS
[6]       Goto B
[5]     ?Otherwise                    Fail(2)
[3]  ?ILS
[4]    Goto A
[3]  ?Otherwise                       Fail(1)
```

**Extended Comments:**
(1) IUT is in the Next State with n=7.
(2) The Receive Pseudo Code processing may start when the IUT stays in the Next State and receives ILS for at least TL_Min. (PC-44a, PC-44b)
(3) Tester continuously transmits Error Line State for the LCT.

**Reasons for Failure:**
(1) IUT does not transmit ILS or TL_Min is not expired.
(2) IUT does not transmit ILS or LC_Short is not expired.
(3) IUT shall not perform Short LCT longer than LC_Long.
(4) IUT does not transmit ILS, HLS or LC_Long is not expired.

#### 6.2.5.2.2 Case-ID: LCT_Fail_2

**Purpose:** Verify that the Tester performs the Link Confidence Test with BADPDUs, the IUT must signal HLS to indicate the LCT fail. (This case is performed only when the IUT has at least a MAC available for the LCT.)

**Test Setup:** All configurations except M to M.

**Procedure:**

```
[1]+IUT_MAC_6S /*Comment(1)*/
[2]  !ILS Start TL_Min /*Comment(2)*/
[3]   A:?ILS
[4]     Goto A
[3]   ?Timeout TL_Min
[4]     !ILS
[5]       B:?ILS
[6]         Goto B
[5]       ?ALS /*Comment(3)*/
[6]         Start LC_Short, LC_Long
[7]           !BADPDU /*Comment(4)*/
[8]             C:?Timeout LC_Short
[9]               D:?Timeout LC_Long      Fail(4)
[9]               ?ALS
[10]                !BADPDU
[11]                  Goto D
[9]               ?ILS
[10]                !ILS /*Comment(5)*/
[11]                  Goto D
[9]               ?HLS                    Pass
[9]               ?Otherwise              Fail(5)
[8]             ?ALS
[9]               !BADPDU
[10]                Goto C
[8]             ?ILS
```


Copyright International Organization for Standardization
Provided by IHS under license with ISO
No reproduction or networking permitted without license from IHS Not for Resale

```
[9]              !ILS
[10]               Goto C
[8]            ?Otherwise                Fail(3)
[5]         ?Otherwise                   Fail(2)
[3]    ?Otherwise                        Fail(1)
```

**Extended Comments:**
(1) IUT is in the Next State with n = 7.
(2) The Receive Pseudo Code processing may start when the IUT received ILS for at least TL_Min in the Next State.
(3) IUT transmits PDUs (ALS) for the Duration of the LCT.
(4) Tester changes the FCS of IUT's frame to be the incorrect FCS. (In this case, the Tester shall prepare a bad FCS pattern in the buffer in order to use later. It repeats every symbol received from IUT until the reception of FCS. If the FCS is received, the Tester transmits the bad FCS pattern instead of repeating IUT's FCS, then the End Delimiter and the Frame Status are repeated.)

**Reasons for Failure:**
(1) IUT does not transmit ILS or TL_Min is not expired.
(2) IUT does not transmit ILS, ALS.
(3) IUT does not transmit ILS, ALS or LC_Short is not expired.
(4) IUT performs Short LCT for longer than LC_Long.
(5) IUT does not transmit ILS, ALS, HLS or LC_Long is not expired.

### 6.2.5.2.3 Case-ID: Restart_LCT_Fail1

**Purpose:** Verify that the IUT goes to the Break State and transmits QLS when the Link Error Rate is greater than LER_Cutoff. (This case is performed only when neither IUT nor Tester has a MAC for the LCT.)

**Test Setup:** All configurations except M to M.

**Procedure:**

```
[1]+To_Next7_ERR /*Comment(1)*/
[2]  !HLS /*Comment(2)*/
[3]    A:?HLS
[4]      Goto A
[3]    ?ILS
[4]      !ILS Start T_Out
[5]        B:?Timeout T_Out          Fail(2)
[5]        ?ILS
[6]          Goto B
[5]        ?QLS                      Pass
[5]        ?Otherwise                Fail(3)
[3]    ?Otherwise                    Fail(1)
```

**Extended Comments:**
(1) IUT is in the Next State with n=7.
(2) Tester transmits HLS indicating the LCT Fail. (PC_TCode(7)_Actions)

**Reasons for Failure:**
(1) IUT does not transmit HLS or ILS.
(2) IUT does not enter the Break State within T_Out. (PC_RCode(8)_Actions, PC-51b)
(3) IUT does not transmit ILS, QLS or T_Out is not expired.

### 6.2.5.2.4 Case-ID: Restart_LCT_Fail2

**Purpose:** Verify that the IUT goes to the Break State and transmits QLS when the Link Error Rate is greater than LER_Cutoff. (This case is performed only when the IUT has at least a MAC available for the LCT).

**Test Setup:** All configurations except M to M.



Copyright International Organization for Standardization
Provided by IHS under license with ISO
No reproduction or networking permitted without license from IHS
Not for Resale

**Procedure:**

```
[1]+To_Next7_BADPDU
[2]  !HLS
[3]   A:?HLS
[4]    Goto A
[3]   ?ILS
[4]    !ILS Start T_Out
[5]      B:?Timeout T_Out          Fail(2)
[5]      ?ILS
[6]       Goto B
[5]      ?QLS                      Pass
[6]      ?Otherwise                Fail(3)
[3]   ?Otherwise                   Fail(1)
```

**Reasons for Failure:**
(1) IUT does not transmit HLS or ILS.
(2) IUT does not enter the Break State within T_Out.
(3) IUT does not transmit ILS, QLS or T_Out is not expired.

### 6.2.6 MAC Local Loop Tests

#### 6.2.6.1 Case-ID: In_Next_8

**Purpose:** Verify that the IUT will transmit HLS to indicate its MAC is available for the MAC Local Loop or MLS to indicate that its MAC is not available for the Local Loop.

**Test Setup:** All configurations.

**Procedure:**

```
[1]+To_Next_7 /*Comment*/
[2]  !ILS
[3]   A:?ILS
[4]    Goto A
[3]   ?HLS                         Pass
[3]   ?MLS                         Pass
[3]   ?Otherwise                   Fail
```

**Extended Comments:**
IUT is in the Next State with n=8.

**Reasons for Failure:**
At the beginning of this procedure, the IUT is in the Next State while ILS is transmitted continuously. After a little while, the IUT changes to the Signal State, an HLS is transmitted to indicate its MAC is available, or a MLS is transmitted to indicate its MAC is not available. If the IUT does not transmit ILS, HLS or MLS then the IUT fails.

#### 6.2.6.2 Case-ID: MAC_LocalLoop_Next9

**Purpose:** Verify that the IUT performs the Local Loop using PDUs and transmits HLS to indicate its MAC output is to be connected to PHY in PCM (CFM) Active State.

**Note:** This case is performed only if the IUT places a MAC on the output port for Local Loop testing.

**Test Setup:** All configurations.

**Procedure:**

```
[1]+To_Next_8 /*Comment(1)*/
[2]  !ILS Start T_Out /*Comment(2)*/
[3]   A:?Timeout T_Out             Fail(2)
[3]   ?ILS
[4]    Goto A
[3]   ?ALS /*Comment(3)*/
[4]    Start T_Next_9 /*Comment(4)*/
[5]     !Repeat /*Note*/
```

--`,,```,,,,````-`-`,,`,,`,`,,`---



Copyright International Organization for Standardization
Provided by IHS under license with ISO
No reproduction or networking permitted without license from IHS Not for Resale

```
[6]       B:?Timeout T_Next_9
[7]         C:?ILS /*Comment(5)*/
[8]           !ILS
[9]             Goto C
[7]         ?ALS /*Comment(5)*/
[8]           !Repeat
[9]             Goto C
[7]         ?HLS                    Pass
[7]         ?Otherwise              Fail(4)
[6]       ?ILS
[7]         !ILS
[8]           Goto B
[6]       ?ALS
[7]         !Repeat
[8]           Goto B
[6]       ?Otherwise                Fail(3)
[3]   ?Otherwise                    Fail(1)
```

**Extended Comments:**
(1) IUT is in the Next State with n=9.
(2) Tester starts a timer T_Out to make sure that the IUT performs the Local Loop within T_Out.
(3) IUT performs the Local Loop using PDUs. (ALS)
(4) IUT must perform the Local Loop for at least T_Next_9. (T_Next(9), PC-44d)
(5) After T_Next(9), the IUT may either perform Local Loop or signal HLS to indicate its MAC output will connect to PHY in PCM (CFM) Active State.

**Note:** At this point, the tester repeats any PDUs (ALS) received from the IUT for the Local Loop test. The Loopback ends when the IUT signals HLS or MLS.

**Reasons for Failure:**
(1) At the beginning of this procedure, the IUT is in the Next State, a sequence of ILS is transmitted. After a little while, the IUT performs the Local Loop, PDUs (ALS) are transmitted, if the IUT does not transmit ILS or ALS then the IUT fails.
(2) IUT remains in the Next State for longer than T_Out.
(3) IUT performs the Local Loop, PDUs are transmitted. If the Tester does not receive ILS (preamble), ALS (from the Start Delimiter of the frame until the End Delimiter of the frame), or T_Next_9 is not expired, then the IUT fails.
(4) After the IUT performs Local Loop for T_Next_9, it may perform either the Local Loop (transmit ILS, ALS) or signal HLS. If the IUT does not transmit ILS, ALS or HLS then the IUT fails.

### 6.2.6.3 Case-ID: No_MAC_LocalLoop_Next9

**Purpose:** Verify that the IUT performs the Local Loop Test when it doesn't have a MAC available for the Local Loop Test and the Tester does have a MAC available by repeating packets sent by the Tester during the Local Loop Test.
Note: This case is performed only if the IUT does not places a MAC on the output port for Local Loop Testing.

**Test Setup:** All configurations except M to M.

**Procedure:**

```
[1]+To_Next8_N /*Comment(1)*/
[2]  !ILS Start TL_Min /*Comment(2)*/
[3]    A:?Timeout TL_Min
[4]      !Packet Start T_Next_9
               /*Comment(3)*/
[5]        B:?ALS /*Comment(4)*/
[6]          Goto B
[5]        ?ILS
[6]          Goto B
[5]        ?Timeout T_Next_9
[6]          C:?ILS
[7]            Goto C
```



Copyright International Organization for Standardization
Provided by IHS under license with ISO
No reproduction or networking permitted without license from IHS
Not for Resale

```
[6]       ?ALS
[7]         Goto C
[6]       ?MLS                    Pass
[6]       ?Otherwise              Fail(3)
[5]     ?Otherwise                Fail(2)
[3]   ?ILS
[4]     Goto A
[3]   ?Otherwise                  Fail(1)
```

**Extended Comments:**
(1) IUT is in the Next State with n=9 and has signaled that it does not have a MAC available for Local Loop Test.
(2) Tester starts a timer TL_Min to ensure that it sends ILS for the minimum required time.
(3) Tester starts a timer T_Next_9 to ensure that the IUT loops back the packet it received for at least T_Next_9. (T_Next(9))
(4) IUT is now repeating the Tester's packet.

**Reasons for failure:**
(1) IUT does not transmit ILS, or TL_Min is not timeout.
(2) IUT does not transmit ILS, ALS or T_Next_9 is not timeout.
(3) IUT does not transmit ILS, MLS or ALS.

### 6.2.6.4 Case-ID: Restart_Illegal_Connection1

**Purpose:** Verify that the IUT will enter the Break State and transmits QLS after Local Loop due to the illegal connection (Port M to Port M).

**Note:** This case is performed only when the IUT has at least a MAC available.

**Test Setup:** M to M.

**Procedure:**

```
[1]+To_Next_8E
[2]  !ILS Start T_Out
[3]   A:?Timeout T_Out            Fail(2)
[3]   ?ILS
[4]     Goto A
[3]   ?ALS
[4]     Start T_Next_9
[5]       !Repeat
[6]         B:?Timeout T_Next_9
[7]           C:?ILS
[8]             !ILS
[9]               Goto C
[7]           ?ALS
[8]             !Repeat
[9]               Goto C
[7]           ?QLS                Pass
[5]           ?Otherwise          Fail(4)
[6]         ?ILS
[7]           !ILS
[8]             Goto B
[6]         ?ALS
[7]           !Repeat
[8]             Goto B
[6]         ?Otherwise            Fail(3)
[3]   ?Otherwise                  Fail(1)
```

**Reasons for Failure:**
(1) IUT does not transmit ILS, ALS or T_Out is not expired.
(2) IUT remains in the Next State for longer than T_Out.
(3) IUT does not transmit ILS, ALS or T_Next_9 is not expired.
(4) IUT does not transmit ILS, ALS or QLS.


Copyright International Organization for Standardization
Provided by IHS under license with ISO
No reproduction or networking permitted without license from IHS Not for Resale

### 6.2.7 Join to Active Tests

#### 6.2.7.1 Case-ID: To_Join

**Purpose:** Verify that the IUT remains in the Join State for TL_Min but not longer than T_Out.

**Test Setup:** All Configurations.

**Procedure:**
[1]+IN_Join /*Comment(1)*/
[2] !HLS Start T_Out, Start TL_Min /*Comment(2)/
[3] A:?Timeout TL_Min
[4] B:?Timeout T_Out Fail(2)
[4] ?HLS
[5] Goto B
[4] ?MLS Pass
[4] ?Otherwise Fail(3)
[3] ?HLS
[4] Goto A
[3] ?Otherwise Fail(1)

**Extended Comments:**
(1) IUT is in the Join State.
(2) Tester transmits HLS and starts timers TL_Min and T_Out to figure out that the IUT remains in the Join State for at least TL_Min but not longer than T_out. (PC-67, Join_Error)

**Reasons for Failure:**
(1) IUT does not transmit HLS or TL_Min is not expired.
(2) IUT remains in the Join State for longer than T_Out. (PC-61b)
(3) IUT does not transmit HLS, MLS or T_Out is not expired.

#### 6.2.7.2 Case-ID: Join_Error1

**Purpose:** Verify that the IUT enters the Break State if HLS has not been received for a period T_Out since it entered the Join State.

**Test Setup:** All Configurations.

**Procedure:**
[1]+IN_Join /*Comment(1)*/
[2] !MLS Start T_Out /*Comment(2)*/
[3] A:?Timeout T_Out
[4] ?QLS Pass
[4] ?Otherwise Fail(2)
[3] ?HLS /*Comment(3)*/
[4] Goto A
[3] ?Otherwise Fail(1)

**Extended Comments:**
(1) IUT is in the Join State.
(2) Tester transmits wrong Line State (MLS) to force IUT to enter the Break State (PC-61b, Join_Error).
(3) IUT transmits HLS while in the Join State.

**Reasons for Failure:**
(1) IUT does not transmit HLS or T_Out is not expired.
(2) IUT does not transmit QLS. (PC-61b)

#### 6.2.7.3 Case-ID: Join_Error2

**Purpose:** Verify that the IUT enters the Break State when QLS is received in the Join State.

**Test Setup:** All Configurations.



Copyright International Organization for Standardization
Provided by IHS under license with ISO
No reproduction or networking permitted without license from IHS Not for Resale

**Procedure:**
[1]+IN_Join /*Comment(1)*/
[2] !QLS Start PC_React /*Comment(2)*/
[3] A:?Timeout PC_React Fail(2)
[3] ?HLS
[4] Goto A
[4] ?QLS Pass
[3] ?Otherwise Fail(1)

**Extended Comments:**
(1) IUT is in the Join State.
(2) Tester transmits Quiet Line State to force IUT to enter the Break State. (PC-61b)

**Reasons for Failure:**
(1) IUT does not transmit HLS,QLS or PC_React is not expired.
(2) IUT does not enter the Break State when QLS is received for longer than PC_React. (PC-61b)

### 6.2.7.4 Case-ID: Join_Error3

**Purpose:** Verify that the IUT enters the Break State when it remains in the Join State for longer than T_Out.

**Test Setup:** All Configurations.

**Procedure:**
[1]+IN_Join /*Comment(1)*/
[2] Start T_Out
[3] A:?Timeout T_out /*Comment(2)*/
[4] B:?HLS
[5] Goto B
[4] ?QLS Pass
[4] ?Otherwise Fail(2)
[3] ?HLS
[4] Goto A
[3] ?Otherwise Fail(1)

**Extended Comments:**
(1) IUT is in the Join State.
(2) IUT remains in the Join State for T_Out.

**Reason for Failure:**
(1) IUT does not transmit HLS or T_out is not expired.
(2) IUT does not transmit QLS or HLS.

### 6.2.7.5 Case-ID: To_Verify

**Purpose:** Verify that the IUT remains in the Verify State for at least TL_Min but not longer than T_Out.

**Test Setup:** All Configurations.

**Procedure:**
[1]+IN_Verify /*Comment(1)*/
[2] !MLS Start T_Out, Start TL_Min
[3] A:?Timeout TL_Min /*Comment(2)*/
[4] B:?Timeout T_Out Fail(2)
[4] ?MLS
[5] Goto B
[4] ?ILS Pass
[4] ?Otherwise Fail(3)
[3] ?MLS /*Comment(3)*/
[4] Goto A
[3] ?Otherwise Fail(1)


Copyright International Organization for Standardization
Provided by IHS under license with ISO
No reproduction or networking permitted without license from IHS Not for Resale

**Extended Comments:**
(1) IUT is in the Verify State.
(2) IUT must remain in the Verify State for at least TL_Min but not longer than T_Out. (PC-78)
(3) IUT transmits MLS while in the Verify State.(Verify_Actions)

**Reasons for Failure:**
(1) IUT does not transmit MLS or TL_Min is not expired.
(2) IUT remains in the Verify State for longer than T_Out. (PC-71b)
(3) IUT does not transmit MLS, ILS or T_Out is not expired.

### 6.2.7.6 Case-ID: Verify_Error1

**Purpose:** Verify that the IUT enters the Break State due to MLS has not been received for a period T_Out since it entered the Verify State.

**Test Setup:** All Configurations.

**Procedure:**
[1]+IN_Verify /*Comment(1)*/
[2] !ILS Start T_Out /*Comment(2)*/
[3] A:?Timeout T_Out
[4] ?QLS Pass
[4] ?Otherwise Fail(2)
[3] ?MLS /*Comment(3)*/
[4] Goto A
[3] ?Otherwise Fail(1)

**Extended Comments:**
(1) IUT is in the Verify State.
(2) Tester transmits wrong Line State (ILS) and starts a timer T_Out to figure out that the IUT will enter the Break State after T_Out. (PC-77, PC-71b)
(3) IUT transmits MLS while in the Verify State. (Verify_Actions)

**Reasons for Failure:**
(1) IUT does not transmit MLS or T_Out is not expired.
(2) IUT does not transmit QLS. (PC-71b)

### 6.2.7.7 Case-ID: Verify_Error2

**Purpose:** Verify that the IUT enters the Break State when QLS is received in the Verify State.

**Test Setup:** All Configurations.

**Procedure:**
[1]+IN_Verify /*Comment(1)*/
[2] !QLS Start PC_React /*Comment(2)*/
[3] A:?Timeout PC_React Fail(1)
[4] ?QLS Pass
[3] ?MLS
[4] Goto A
[3] ?Otherwise Fail(2)

**Extended Comments:**
(1) IUT is in the Verify State.
(2) IUT must enter the Break State while QLS is received within PC_React.

**Reasons for Failure:**
(1) IUT does not enter the Break State after QLS is received for PC_React. (PC-71b).
(2) IUT does not transmit QLS, MLS or PC_React is not expired.

### 6.2.7.8 Case-ID: Verify_Error3

**Purpose:** Verify that the IUT enters the Break state when HLS is received in the Verify state.

**Test Setup:** All Configurations.



--`,,```,,,,````-`-`,,`,,`,`,,`---
Copyright International Organization for Standardization
Provided by IHS under license with ISO
No reproduction or networking permitted without license from IHS
Not for Resale

**Procedure:**
[1]+IN_Verify /*Comment(1)*/
[2] !HLS Start T_Out /*Comment(2)*/
[3] A:?Timeout T_Out
[4] ?QLS Pass
[4] ?Otherwise Fail(2)
[3] ?MLS /*Comment(3)*/
[4] Goto A
[3] ?Otherwise Fail(1)

**Extended Comments:**
(1) IUT is in the Verify state.
(2) Tester transmits wrong Line State (HLS) and starts a timer T_Out to figure out that the IUT will enter the Break state after T_Out. (PC-77, PC-71b)
(3) IUT transmits MLS while in the Verify state. (Verify_Actions)

**Reason for Failure:**
(1) IUT does not transmit MLS or T_Out is not expired.
(2) IUT does not transmit QLS. (PC-71b)

### 6.2.7.9 Case-ID: To_Active

**Purpose:** Verify that the IUT transmits ALS after ILS has been transmitted for a sufficient time in the Active State.

**Test Setup:** All Configuratins.

**Procedure:**
[1]+IN_Active /*Comment(1)*/
[2] !ILS Start TL_Min /*Comment(2)*/
[3] A:?Timeout TL_Min
[4] B:?ILS
[5] Goto B
[4] ?ALS Pass
[4] ?Otherwise Fail(2)
[3] ?ILS
[4] Goto A
[3] ?Otherwise Fail(1)

**Extended Comments:**
(1) IUT is in the Active State.
(2) Tester transmits ILS and starts a timer
TL_Min. (PC-88a, PC-88b)

**Reasons for Failure:**
(2) IUT does not transmit ILS or TL_Min is not expired.
(2) IUT does not transmit ILS or ALS in the Active State. (Active_Actions, PC-88a, PC-88b)

### 6.2.7.10 Case-ID: Active_Error1

**Purpose:** Verify that the IUT enters the Break State since HLS has been received for longer than T_Out in the Active State.

**Test Setup:** All Configurations.

**Procedure:**
[1]+IN_Active /*Comment(1)*/
[2] !HLS Start T_Out /*Comment(2)*/
[3] A:?Timeout T_out
[4] ?QLS Pass
[4] ?Otherwise Fail(2)
[3] ?ILS
[4] Goto A
[3] ?ALS
[4] Goto A
[3] ?Otherwise Fail(1)


--`,,```,,,,````-`-`,,`,,`,`,,`---
Copyright International Organization for Standardization
Provided by IHS under license with ISO
No reproduction or networking permitted without license from IHS
Not for Resale

**Extended Comments:**
(1) IUT is in the Active State.
(2) Tester transmits wrong Line State (HLS) for T_Out to force IUT to enter the Break State. (PC-81b)

**Reasons for Failure:**
(1) IUT does not transmit ILS, ALS or T_Out is not expired.
(2) IUT does not transmit QLS.

### 6.2.7.11 Case-ID: Active_Error2

**Purpose:** Verify that the IUT enters the Break State from the Active State while the Link Error Rate is greater than LER_Cutoff.

**Test Setup:** All Configurations.

**Procedure:**

| | | |
|---|---|---|
| [1]+IN_Active /*Comment(1)*/ | | |
| [2] !ERR Start T_Out /*Comment(2)*/ | | |
| [3] A:?Timeout T_Out | | |
| [4] ?QLS | Pass | |
| [4] ?Otherwise | Fail(2) | |
| [3] ?ILS | | |
| [4] Goto A | | |
| [3] ?ALS | | |
| [4] Goto A | | |
| [3] ?Otherwise | Fail(1) | |

**Extended Comments:**
(1) IUT is in the Active State.
(2) Tester transmits Error Line State for T_Out to force the IUT to enter the Break State. (PC-81b)

**Reasons for Failure:**
(1) IUT does not transmit ILS, ALS or T_Out is not expired.
(2) IUT does not enter the Break State when ERR is received and the Link Error Rate is greater than LER_Cutoff for longer than T_Out. (PC-81b)

### 6.2.7.12 Case-ID: Active_Error3

**Purpose:** Verify that the IUT enters the Break state since QLS has been received for longer than T_Out in the Active state.

**Test Setup:** All configurations.

**Procedure:**

| | | |
|---|---|---|
| [1]+IN_Active /*Comment(1)*/ | | |
| [2] !QLS Start T_Out /*Comment(2)*/ | | |
| [3] A:?Timeout T_out | | |
| [4] ?QLS | Pass | |
| [4] ?Otherwise | Fail(2) | |
| [3] ?ILS | | |
| [4] Goto A | | |
| [3] ?ALS | | |
| [4] Goto A | | |
| [3] ?Otherwise | Fail(1) | |

**Extended Comments:**
(1) IUT is in the Active state.
(2) Tester transmits wrong Line State (QLS) for T_Out to force IUT to enter the Break state. (PC-81b)

**Reason for Failure:**
(1) IUT does not transmit ILS, ALS or T_Out is not expired.
(2) IUT does not transmit QLS.



Copyright International Organization for Standardization
Provided by IHS under license with ISO
No reproduction or networking permitted without license from IHS Not for Resale

## 6.3 Subroutines used for internal function call:

### 6.3.1 Init

**Purpose:** This routine starts with the IUT in an unknown State, brings it to the Break State, progresses it to be in the Next State, then returns it to the Break State. When the routine completes, the IUT has just entered the Break State.

**Procedure:**

```
[1] !QLS
[2]  A:?QLS /*Comment(1)*/
[3]   Goto A
[2]  ?HLS /*Comment(2)*/
[3]   !HLS /*Comment(3)*/
[4]    B:?HLS
[5]     Goto B
[4]    ?ILS /*Comment(4)*/
[5]     !QLS Start PC_React /*Comment(5)*/
[6]      C:?Timeout PC_React   Inconclusive(3)
[6]      ?ILS
[7]       Goto C
[6]      ?QLS /*Comment(6)*/
[6]      ?Otherwise            Inconclusive(4)
[4]    ?Otherwise              Inconclusive(2)
[2]  ?Otherwise                Inconclusive(1)
```

**Extended Comments:**
(1) IUT may stay in the Break State or the Off State.
(2) IUT enters the Connect State and transmits HLS. (PC-13, PC-33)
(3) Tester keeps transmitting HLS.
(4) IUT enters the Next State and transmits ILS. (PC-34)
(5) Tester transmits Quiet Line State when the IUT is in the Next State to force IUT to enter the Break State. (PC-41b)
(6) IUT ends with entering the Break State and transmitting Quiet Line State.

### 6.3.2 Start_To_Connect

**Purpose:** This procedure begins with the IUT in any state and ends with the entry of the IUT into the Connect State while the tester is sending QLS.

**Procedure:**

```
[1]!QLS Start TB_Min
[2]  B?Timeout TB_Min
[3]   A:?QLS
[4]    Goto A
[3]   ?HLS /*Comment*/
[3]   ?Otherwise              Inconclusive(2)
[2]  ?QLS
[3]   Goto B
[2]  ?Otherwise               Inconclusive(1)
```

**Extended Comments:** IUT ends in the Connect State and transmits HLS. (PC-13, PC-33)

### 6.3.3 Start_To_Next

**Purpose:** This procedure begins with the IUT in the Connect State and ends with the entry of the IUT into the Next State while the tester is sending HLS.


Copyright International Organization for Standardization
Provided by IHS under license with ISO
No reproduction or networking permitted without license from IHS
Not for Resale

**Procedure:**
[1]+Start_To_Connect /*Comment(1)*/
[2] !HLS
[3] A:?HLS /*Comment(2)*/
[4] Goto A
[3] ?ILS /*Comment(3)*/
[3] ?Otherwise Inconclusive

**Extended Comments:**
(1) IUT is in the Connect State.
(2) IUT stays in the Connect State.
(3) IUT ends in the Next State and transmits ILS. (PC-34)

### 6.3.4 To_Next_0

**Purpose:** This procedure begins when the IUT enters the Next State from the Connect State (n=0), goes through the Signal State and ends in the Next State with n=1.

**Procedure:**
[1]+Start_To_Next /*Comment(1)*/
[2] !ILS
[3] A:?ILS /*Comment(2)*/
[4] Goto A
[3] ?MLS /*Comment(3)*/
[4] !MLS
[5] B:?MLS /*Comment(4)*/
[6] Goto B
[5] ?ILS /*Comment(5)*/
[5] ?Otherwise Inconclusive(2)
[3] ?Otherwise Inconclusive(1)

**Extended Comments:**
(1) IUT is in the Next State.
(2) Tester waits for the IUT to perform PCM Pseudo Code with n=0. (PC-44a, PC-44b, PC_R-Code(0)_Actions)
(3) IUT enters the Signal State and transmit MLS. (T_Val(0), PC-45)
(4) Tester waits for the IUT to go back to the Next State from Signal State. (PC-55b)
(5) IUT ends in the Next State with n=1. (PC-54)

### 6.3.5 To_Next_1

**Purpose:** This procedure begins when the IUT enters the Next State with n=1, indicates its port type, and ends in the Next State with n=2.

**Note:** This procedure is used for all of the connections except port M to port M when n=1.

**Procedure:**
[1]+To_Next_0 /*Comment(1)*/
[2] !ILS
[3] A:?ILS
[4] Goto A
[3] ?MLS
[4] !Port_Type /*Comment(2)*/
[5] B:?MLS
[6] Goto B
[5] ?ILS /*Comment(3)*/
[5] ?Otherwise Inconclusive(2)
[3] ?HLS
[4] !Port_Type /*Comment(2)*/
[5] C:?HLS
[6] Goto C
[5] ?ILS /*Comment(3)*/
[5] ?Otherwise Inconclusive(3)
[3] ?Otherwise Inconclusive(1)



--`,,```,,,,````-`-`,,`,,`,`,,`---
Copyright International Organization for Standardization
Provided by IHS under license with ISO
No reproduction or networking permitted without license from IHS
Not for Resale

**Extended Comments:**
(1) IUT is in the Next State with n=1.
(2) Port_Type is the Line State which is transmitted continuously by the Tester in order to show the Tester's port type. If the Tester's port type is A or B, then MLS shall be transmitted here, otherwise, HLS shall be transmitted here.
(3) IUT ends in the Next State with n=2.

### 6.3.5.1 To_Next_1W

**Purpose:** This procdure begins as the IUT enters the Next State with n=1 and ends with n=2.

**Note:** This procedure is called by the connection of port A to port M or port B to port M.

**Procedure:**
```
[1]+To_Next_0
[2]  !ILS
[3]    A:?ILS
[4]      Goto A
[3]    ?MLS /*Comment(1)*/
[4]      !HLS /*Comment(2)*/
[5]        B:?MLS
[6]          Goto B
[5]        ?ILS /*Comment(3)*/
[5]        ?Otherwise                Inconclusive(2)
[3]    ?Otherwise                    Inconclusive(1)
```

**Extended Comments:**
(1) IUT transmits MLS to indicate its port type is A or B. (T_Val(1))
(2) Tester transmits HLS to indicate its port type is M or S. (T_Val(1))
(3) IUT ends in the Next State with n=2. (PC-54)

### 6.3.5.2 To_Next_1I

**Purpose:** This procedure begins when the IUT enters the Next State with n=1 and ends with n=2.

**Note:** This procedure is called by the connection of port M to port M only.

**Procedure:**
```
[1]+To_Next_0
[2]  !ILS
[3]    A:?ILS
[4]      Goto A
[3]    ?HLS /*Comment(1)*/
[4]      !HLS /*Comment(2)*/
[5]        B:?HLS
[6]          Goto B
[5]        ?ILS
[5]        ?Otherwise                Inconclusive(2)
[3]    ?Otherwise                    Inconclusive(1)
```

**Extended Comments:**
(1) IUT transmits HLS to indicate its port type is M or S. (T_Val(1))
(2) Tester transmits HLS to indicate its port type is M or S. (T_Val(1))
(3) IUT ends in the Next State with n=2.

### 6.3.6 To_Next_2

**Purpose:** This procedure begins when the IUT enters the Next State with n=2, signals the second PC_Type bit and ends with the IUT in the Next State with n=3.
Note: This procedure is called by all of the configurations except for port M to port M.


Copyright International Organization for Standardization
Provided by IHS under license with ISO
No reproduction or networking permitted without license from IHS Not for Resale

**Procedure:**

```
[1]+To_Next_1
[2]  !ILS
[3]    A:?ILS
[4]      Goto A
[3]    ?MLS
[4]      !Port_Type /*Comment(1)*/
[5]        B:?MLS
[6]          Goto B
[5]        ?ILS /*Comment(2)*/
[5]        ?Otherwise              Inconclusive(2)
[3]    ?HLS
[4]      !Port_Type /*Comment(1)*/
[5]        C:?HLS
[6]          Goto C
[5]        ?ILS /*Comment(2)*/
[5]        ?Otherwise              Inconclusive(3)
[3]    ?Otherwise                  Inconclusive(1)
```

**Extended Comments:**
(1) At this point, if the Tester's port type is A or S then MLS shall be transmitted; if the Tester's port type is B or M then HLS shall be transmitted.
(2) IUT ends in the Next State with n=3.

### 6.3.6.1 To_Next_2W

**Purpose:** This procedure begins when the IUT enters Next State with n=2 and ends with n=3.
Note: This procedure is called by the configuration of port A to port M or port B to port M.

**Procedure:**

```
[1]+To_Next_1W
[2]  !ILS
[3]    A:?ILS
[4]      Goto A
[3]    ?MLS /*Comment(1)*/
[4]      !HLS /*Comment(3)*/
[5]        B:?MLS
[6]          Goto B
[5]        ?ILS /*Comment(4)*/
[5]        ?Otherwise              Inconclusive(2)
[3]    ?HLS /*Comment(2)*/
[4]      !HLS /*Comment(3)*/
[5]        C:?HLS
[6]          Goto C
[5]        ?ILS /*Comment(4)*/
[5]        ?Otherwise              Inconclusive(3)
[3]    ?Otherwise                  Inconclusive(1)
```

**Extended Comments:**
(1) IUT transmits MLS to indicate its port type is A(IUT has transmited MLS when n=1). (T_Val(2))
(2) IUT transmits HLS to indicate its port type is B (IUT has transmitted MLS when n=1). (T_Val(2))
(3) Tester transmits HLS to indicate its port type is M. (Tester has transmited HLS when n=1) (T_Val-(2))
(4) IUT ends in the Next State with n=3. (PC-54)

### 6.3.6.2 To_Next_2I

**Purpose:** This procedure begins when the IUT enters the Next State with n=2 and ends with n=3.
Note: This procedure is used for the connection of M port to M port only.



Copyright International Organization for Standardization
Provided by IHS under license with ISO
No reproduction or networking permitted without license from IHS
Not for Resale

**Procedure:**

```
[1]+To_Next_1I
[2]  !ILS
[3]   A:?ILS
[4]    Goto A
[3]   ?HLS /*Comment(1)*/
[4]    !HLS /*Comment(2)*/
[5]     B:?HLS
[6]      Goto B
[5]     ?ILS /*Comment(3)*/
[5]     ?Otherwise              Inconclusive(2)
[3]  ?Otherwise                 Inconclusive(1)
```

**Extended Comments:**
(1) IUT transmits HLS to indicate its port type is M. (IUT has transmitted HLS when n=1). (T_Val(2))
(2) Tester transmits HLS to indicate its port type is M. (Tester has transmitted HLS when n=1). (T_Val(2))
(3) IUT ends in the Next State with n=3. (PC-54)

### 6.3.7 To_Next_3

**Purpose:** This procedure begins when the IUT enters the Next State (n=3), checks its connection policy and ends in the Next State with n=4.

**Procedure:**

```
[1]+To_Next_2 /*Comment(1)*/
[2]  !ILS
[3]   A:?ILS
[4]    Goto A
[3]   ?HLS /*Comment(2)*/
[4]    !HLS /*Comment(3)*/
[5]     B:?HLS
[6]      Goto B
[5]     ?ILS /*Comment(4)*/
[5]     ?Otherwise              Inconclusive(2)
[3]  ?Otherwise                 Inconclusive(1)
```

**Extended Comments:**
(1) IUT is in the Next State with n=3.
(2) (IUT checks the Tester's Port type according to the values from the Tester's R_Val(1) and R_Val(2) bits and decides the connection policy is valid. (PC_RCode(3)_Actions, PC_TCode(3)_Actions)
(3) Tester transmits HLS to indicate the Valid Connection, IUT must memorize this information in order to use it later.
(4) IUT ends in the Next State with n=4. (PC-54)

**Purpose:** This procedure begins when the IUT enters Next State (n=3), transmits MLS to indicate its policy is illegal for the connection of M Port to M Port, and ends with n=4.

**Procedure:**

```
[1]+To_Next_2I
[2]  !ILS
[3]   A:?ILS
[4]    Goto A
[3]   ?MLS /*Comment(1)*/
[4]    !MLS
[5]     B:?MLS
[6]      Goto B
[5]     ?ILS /*Comment(2)*/
[5]     ?Otherwise      Inconclusive(2)
[3]  ?Otherwise         Inconclusive(1)
```


Copyright International Organization for Standardization
Provided by IHS under license with ISO
No reproduction or networking permitted without license from IHS Not for Resale

**Extended Comments:**
(1) IUT checks the Tester's Port type according to the received bits of R_Val(1) and R_Val(2) and decides that the connection is Illegal. (M port to M port)
(2) IUT ends in the Next State with n=4.

### 6.3.8 To_Next_4S

**Purpose:** This procedure begins when the IUT enters the Next State (n=4), sets the Short (Medium or Long) Link Confidence Test Duration and ends in the Next State with n=5.

**Procedure:**

```
[1]+To_Next_3 /*Comment(1)*/
[2]  !ILS
[3]    A:?ILS
[4]      Goto A
[3]    ?MLS /*Comment(2)*/
[4]      !MLS /*Comment(4)*/
[5]        B:?MLS
[6]          Goto B
[5]        ?ILS /*Comment(6)*/
[5]        ?Otherwise              Inconclusive(2)
[3]    ?HLS /*Comment(3)*/
[4]      !HLS /*Comment(5)*/
[5]        C:?HLS
[6]          Goto C
[5]        ?ILS /*Comment(6)*/
[5]        ?Otherwise              Inconclusive(3)
[3]    ?Otherwise                  Inconclusive(1)
```

**Extended Comments:**
(1) IUT is in the Next State with n=4.
(2) IUT transmits MLS to indicate the Duration of LCT is Short or Medium. (T_Val(4))
(3) IUT transmits HLS to indicate the Duration of LCT is Long. (T_Val(4) note)
(4) Tester transmits MLS to indicate Short or Medium LCT Duration.
(5) Tester transmits HLS to indicate Long LCT Duration.
(6) IUT ends in the Next State with n=5. (PC-54)

### 6.3.9 To_Next_4M

**Purpose:** IUT transmits MLS to indicate a Medium (Long) Link Confidence Test Duration with n=4 and PC_LCT_Fail > 0.

**Procedure:**

```
[1]+Break_In_Next7 /*Comment(1)*/
[2] +To_Next_3 /*Comment(2)*/
[3]  !ILS
[4]    A:?ILS
[5]      Goto A
[4]    ?MLS /*Comment(3)*/
[5]      !MLS
[6]        B:?MLS
[7]          Goto B
[6]        ?ILS /*Comment(5)*/
[6]        ?Otherwise              Inconclusive(2)
[4]    ?HLS /*Comment(4)*/
[5]      !HLS
[6]        C:?HLS
[7]          Goto C
[6]        ?ILS /*Comment(5)*/
[6]        ?Otherwise              Inconclusive(3)
[4]    ?Otherwise                  Inconclusive(1)
```



Copyright International Organization for Standardization
Provided by IHS under license with ISO
No reproduction or networking permitted without license from IHS
Not for Resale

**Extended Comments:**
(1) IUT enters the Break State and increases the PC_LCT_Fail value.
(2) IUT is in the Next State with n=4.
(3) IUT transmits MLS to indicate a Short or Medium LCT Duration. (T_Val(4))
(4) IUT transmits HLS to indicate a Long LCT Duration. (T_Val(4) Note)
(5) IUT ends in the Next State with n=5. (PC-54)

### 6.3.10 To_Next_4L

**Purpose:** IUT transmits HLS to indicate a Long Link Confidence Test Duration while its LEM_Fail is set because the link error rate is greater than LER_Cutoff in the last Active State.

**Procedure:**
```
[1]+Break_In_Active /*Comment(1)*/
[2] +To_Next_3 /*Comment(2)*/
[3]   !ILS
[4]    A:?ILS
[5]      Goto A
[4]    ?HLS /*Comment(3)*/
[5]      !HLS
[6]        B:?HLS
[7]          Goto B
[6]        ?ILS /*Comment(4)*/
[6]        ?Otherwise              Inconclusive(2)
[4]    ?Otherwise                  Inconclusive(1)
```

**Extended Comments:**
(1) IUT enters the Break State and set the
LEM_Fail because the Link Error Rate is greater than LER_Cutoff.
(2) IUT is in the Next State with n=4.
(3) IUT transmits HLS indicating a Long or Extended LCT Duration. (T_Val(4))
(4) IUT ends in the Next State with n=5. (PC-54)

### 6.3.11 To_Next_4E

**Purpose:** This procedure begins when the IUT enters Next State (n=4), sets the Extended Link Confidence Test Duration and ends in the Next State with n=5.
Note: This procedure is used for the configuration of M port to M port only.

**Procedure:**
```
[1]+To_Next_MM3 /*Comment(1)*/
[2]  !ILS
[3]    A:?ILS
[4]      Goto A
[3]    ?HLS /*Comment(2)*/
[4]      !HLS /*Comment(3)*/
[5]        B:?HLS
[6]          Goto B
[5]        ?ILS /*Comment(4)*/
[5]        ?Otherwise              Inconclusive(2)
[3]    ?Otherwise                  Inconclusive(1)
```

**Extended Comments:**
(1) IUT is in the Next State with n=4.
(2) IUT transmits HLS to indicate the Duration of LCT is Long or Extended. (T_Val(4))
(3) Tester transmits HLS to indicate Long or Extended Duration.
(4) IUT ends in the Next State with n=5. (PC-54)


Copyright International Organization for Standardization
Provided by IHS under license with ISO
No reproduction or networking permitted without license from IHS Not for Resale

### 6.3.12 To_Next_5S

**Purpose:** This procedure begins when the IUT enters the Next State, sets the Short (Medium, Long) LCT Duration (n=4, 5) and ends in the Next State with n=6.

**Procedure:**

```
[1]+To_Next_3 /*Comment(1)*/
[2]  !ILS
[3]    A:?ILS
[4]      Goto A
[3]    ?MLS /*Comment(2)*/
[4]      !MLS
[5]        B:?MLS
[6]          Goto B
[5]        ?ILS /*Comment(3)*/
[6]          !ILS
[7]            C:?ILS
[8]              Goto C
[7]            ?MLS /*Comment(4)*/
[8]              !MLS
[9]                D:?MLS
[10]                 Goto D
[9]                ?ILS /*Comment(6)*/
[9]                ?Otherwise          Inconclusive(5)
[7]            ?HLS /*Comment(5)*/
[8]              !HLS
[9]                E:?HLS
[10]                 Goto E
[9]                ?ILS /*Comment(6)*/
[9]                ?Otherwise          Inconclusive(6)
[7]            ?Otherwise              Inconclusive(3)
[5]        ?Otherwise                  Inconclusive(2)
[3]    ?HLS /*Comment(2)*/
[4]      !HLS
[5]        F:?HLS
[6]          Goto F
[5]        ?ILS /*Comment(3)*/
[6]          !ILS
[7]            G:?ILS
[8]              Goto G
[7]            ?MLS /*Comment(7)*/
[8]              !MLS
[9]                H:?MLS
[10]                 Goto H
[9]                ?ILS /*Comment(6)*/
[9]                ?Otherwise          Inconclusive(7)
[7]            ?Otherwise              Inconclusive(4)
[5]        ?Otherwise                  Inconclusive(2)
[3]    ?Otherwise                      Inconclusive(1)
```

**Extended Comments:**

(1) IUT is in the Next State with n=4.
(2) IUT transmits MLS to indicate the Duration of LCT is Short or HLS to indicate the Duration of LCT is Long. (T_Val(4))
(3) IUT ends in the Next State with n=5.
(4) IUT transmits MLS to indicate the Short LCT Duration. (T_Val(5))
(5) IUT transmits HLS to indicate the Medium LCT Duration. (T_Val(5))
(6) IUT ends in Next State with n=6.
(7) IUT transmits MLS to indicate the Long LCT Duration. (T_Val(5))



Copyright International Organization for Standardization
Provided by IHS under license with ISO
No reproduction or networking permitted without license from IHS
Not for Resale

### 6.3.13 To_Next_5M

**Purpose:** This procedure begins when the IUT enters the Next State, sets the Medium (Long) Link Confidence Test Duration (n=4, 5) and ends in Next State with n=6.

**Procedure:**

```
[1]+To_Next_3 /*Comment(1)*/
[2]  !ILS
[3]    A:?ILS
[4]      Goto A
[3]    ?MLS /*Comment(2)*/
[4]      !MLS
[5]        B:?MLS
[6]          Goto B
[5]        ?ILS /*Comment(3)*/
[6]          !ILS
[7]            C:?ILS
[8]              Goto C
[7]            ?HLS /*Comment(4)*/
[8]              !HLS
[9]                D:?HLS
[10]                 Goto D
[9]               ?ILS /*Comment(5)*/
[9]               ?Otherwise          Inconclusive(5)
[7]            ?Otherwise             Inconclusive(3)
[5]        ?Otherwise                 Inconclusive(2)
[3]    ?HLS /*Comment(2)*/
[4]      !HLS
[5]        E:?HLS
[6]          Goto E
[5]        ?ILS /*Comment(3)*/
[6]          !ILS
[7]            F:?ILS
[8]              Goto F
[7]            ?MLS /*Comment(6)*/
[8]              !MLS
[9]                G:?MLS
[10]                 Goto G
[9]               ?ILS /*Comment(5)*/
[9]               ?Otherwise          Inconclusive(6)
[7]            ?Otherwise             Inconclusive(4)
[5]        ?Otherwise                 Inconclusive(2)
[3]    ?Otherwise                     Inconclusive(1)
```

**Extended Comments:**

(1) IUT is in the Next State with n=4.
(2) IUT transmits MLS to indicate a Medium LCT Duration or HLS to indicate a Long LCT. (T_Val(4))
(3) IUT ends in the Next State with n=5.
(4) IUT transmits HLS to indicate a Medium LCT Duration.
(5) IUT ends in the Next State with n=6.
(6) IUT transmits MLS to indicate a Long LCT Duration.



Copyright International Organization for Standardization
Provided by IHS under license with ISO
No reproduction or networking permitted without license from IHS Not for Resale

### 6.3.14 To_Next_5L

**Purpose:** IUT transmits MLS to indicate a Long Link Confidence Test Duration. (n=5)

**Procedure:**

```
[1]+To_Next_4L /*Comment(1)*/
[2]  !ILS
[3]    A:?ILS
[4]      Goto A
[3]    ?MLS    /*Comment(2)*/
[4]      !MLS  /*Comment(3)*/
[5]        B:?MLS
[6]          Goto B
[5]        ?ILS /*Comment(4)*/
[5]        ?Otherwise        Inconclusive(2)
[3]    ?Otherwise            Inconclusive(1)
```

**Extended Comments:**

(1) IUT is in the Next State with n=5.
(2) IUT transmits MLS indicating a Long LCT Duration. (T_Val(4,5))
(3) Tester transmits MLS indicating a Long LCT Duration.
(4) IUT ends in the Next State with n=6. (PC-54)

### 6.3.15 To_Next_5E

**Purpose:** This procedure begins when the IUT enters the Next State (n=5), sets the Extended Link Confidence Test Duration and ends in the Next State with n=6.

**Procedure:**

```
[1]+To_Next_4E /*Comment(1)*/
[2]  !ILS
[3]    A:?ILS
[4]      Goto A
[3]    ?HLS   /*Comment(2)*/
[4]      !HLS /*Comment(3)*/
[5]        B:?HLS
[6]          Goto B
[5]        ?ILS /*Comment(4)*/
[5]        ?Otherwise        Inconclusive(2)
[3]    ?Otherwise            Inconclusive(1)
```

**Extended Comments:**

(1) IUT is in the Next State with n=5.
(2) IUT transmits HLS to indicate the Duration of LCT is Extended. (T_Val(4,5))
(3) Tester transmits HLS to indicate the Extended Duration.
(4) IUT ends in the Next State with n=6. (PC-54)

### 6.3.16 No_MAC_6S

**Purpose:** This procedure begins when the IUT enters the Next State with n=6, transmits MLS to indicate its MAC is not available for the Short LCT and ends in the Next State with n=7.

**Procedure:**

```
[1]+To_Next_5S /*Comment(1)*/
[2]  !ILS
[3]    A:?ILS
[4]      Goto A
[3]    ?MLS /*Comment(2)*/
[4]      !MLS /*Comment(3)*/
[5]        B:?MLS
[6]          Goto B
[5]        ?ILS /*Comment(4)*/
[5]        ?Otherwise        Inconclusive(2)
[3]    ?Otherwise            Inconclusive(1)
```



Copyright International Organization for Standardization
Provided by IHS under license with ISO
No reproduction or networking permitted without license from IHS
Not for Resale

**Extended Comments:**
(1) IUT is in the Next State with n = 6.
(2) IUT transmits MLS to inidicate its MAC is not available for the LCT. (PC_TCode(6)_Actions)
(3) Tester's MAC is not available for the LCT.
(4) IUT ends in the Next State with n=7. (PC-54)

### 6.3.17 IUT_MAC_6S

**Purpose:** This procedure begins when the IUT enters the Next State (n=6), transmits HLS to indicate its MAC is available for the Short LCT.

**Procedure:**
```
[1]+To_Next_5S
[2]  !ILS
[3]   A:?ILS
[4]    Goto A
[3]   ?HLS /*Comment(1)*/
[4]    !MLS /*Comment(2)*/
[5]      B:?HLS
[6]       Goto B
[5]      ?ILS /*Comment(3)*/
[5]      ?Otherwise       Inconclusive(2)
[3]   ?Otherwise          Inconclusive(1)
```

**Extended Comments:**
(1) IUT transmits HLS to indicate its MAC is available for the Short Link Confidence Test.
(2) Tester transmits MLS to indicate its MAC is not available for the Short Link Confidence Test.
(3) IUT ends in the Next State with n = 7.

### 6.3.18 No_MAC_6M

**Purpose:** This procedure begins when the IUT enters Next State with n=6, transmits MLS to indicate its MAC is not available for the Medium LCT and ends in the Next State with n = 7**.**

**Procedure:**
```
[1]+To_Next_5M /*Comment(1)*/
[2]  !ILS
[3]   A:?ILS
[4]    Goto A
[3]   ?MLS /*Comment(2)*/
[4]    !MLS
[5]      B:?MLS
[6]       Goto B
[5]      ?ILS /*Comment(3)*/
[5]      ?Otherwise       Inconclusive(2)
[3]   ?Otherwise          Inconclusive(1)
```

**Extended Comments:**
(1) IUT is in the Next State with n = 6.
(2) IUT transmits MLS to indicate its MAC is not available for the Medium LCT.
(3) IUT ends in the Next State with n = 7.

### 6.3.19 IUT_MAC_6M

**Purpose:** This procedure begins when the IUT enters the Next State, n=6, transmits HLS to indicate its MAC is available for the Medium LCT and ends in the Next State with n=7.


Copyright International Organization for Standardization
Provided by IHS under license with ISO
No reproduction or networking permitted without license from IHS Not for Resale

**Procedure:**

```
[1]+To_Next_5M
[2]  !ILS
[3]    A:?ILS
[4]      Goto A
[3]    ?HLS /*Comment(1)*/
[4]      !MLS
[5]        B:?HLS
[6]          Goto B
[5]        ?ILS /*Comment(2)*/
[5]        ?Otherwise        Inconclusive(2)
[3]    ?Otherwise            Inconclusive(1)
```

**Extended Comments:**

(1) IUT transmits HLS to indicate its MAC is available for the Medium LCT.
(2) IUT ends in the Next State with n = 7.

### 6.3.20 No_MAC_6L

**Purpose:** This procedure begins when the IUT enters the Next State (n=6), transmits MLS to indicate its MAC is not available for the Long LCT, and ends in the Next State with n=7.

**Procedure:**

```
[1]+To_Next_5L /*Comment(1)*/
[2]  !ILS
[3]    A:?ILS
[4]      Goto A
[3]    ?MLS /*Comment(2)*/
[4]      !MLS
[5]        B:?MLS
[6]          Goto B
[5]        ?ILS /*Comment(3)*/
[5]        ?Otherwise              Inconclusive(2)
[3]    ?Otherwise                  Inconclusive(1)
```

**Extended Comments:**

(1) IUT is in the Next State with n = 6.
(2) IUT transmits MLS to indicate its MAC is not available for the Long LCT.
(3) IUT ends in the Next State with n = 7.

### 6.3.21 IUT_MAC_6L

**Purpose:** This procedure begins when the IUT enters the Next State (n=6), transmits HLS to indicate its MAC is available for the Long LCT and ends in the Next State with n = 7.

**Procedure:**

```
[1]+To_Next_5L /*Comment(1)*/
[2]  !ILS
[3]    A:?ILS
[4]      Goto A
[3]    ?HLS /*Comment(2)*/
[4]      !MLS
[5]        B:?HLS
[6]          Goto B
[5]        ?ILS /*Comment(3)*/
[5]        ?Otherwise        Inconclusive(2)
[3]    ?Otherwise            Inconclusive(1)
```

**Extended Comments:**

(1) IUT is in the Next State with n = 6.
(2) IUT transmits HLS to indicate its MAC is available for the Long LCT.
(3) IUT ends in the Next State with n = 7.



--`,,```,,,,````-`-`,,`,,`,`,,`---
Copyright International Organization for Standardization
Provided by IHS under license with ISO
No reproduction or networking permitted without license from IHS
Not for Resale

### 6.3.22 No_MAC_6E

**Purpose:** This procedure begins when the IUT enters the Next State (n=6), transmits MLS to indicate its MAC is not available for the Extended LCT, and ends in the Next State with n=7.

**Procedure:**

```
[1]+To_Next_5E /*Comment(1)*/
[2]  !ILS
[3]    A:?ILS
[4]      Goto A
[3]    ?MLS /*Comment(2)*/
[4]      !MLS
[5]        B:?MLS
[6]          Goto B
[5]        ?ILS /*Comment(3)*/
[5]        ?Otherwise              Inconclusive(2)
[3]    ?Otherwise                  Inconclusive(1)
```

**Extended Comments:**
(1) IUT is in the Next State with n = 6.
(2) IUT transmits MLS to indicate its MAC is not available for the Extended LCT.
(3) IUT ends in the Next State with n = 7.

### 6.3.23 IUT_MAC_6E

**Purpose:** This procedure begins when the IUT enters the Next State (n=6), transmits HLS to indicate its MAC is available for the Extended LCT, ends in the Next State with n=7.

**Procedure:**

```
[1]+To_Next_5E /*Comment(1)*/
[2]  !ILS
[3]    A:?ILS
[4]      Goto A
[3]    ?HLS /*Comment(2)*/
[4]      !MLS
[5]        B:?HLS
[6]          Goto B
[5]        ?ILS /*Comment(3)*/
[5]        ?Otherwise        Inconclusive(2)
[3]    ?Otherwise            Inconclusive(1)
```

**Extended Comments:**
(1) IUT is in the Next State with n = 6.
(2) IUT transmits HLS to indicate its MAC is available for the Extended LCT.
(3) IUT ends in the Next State with n = 7.

### 6.3.24 To_Next_7

**Purpose:** This procedure begins when the IUT enters the Next State with n=6 and transmits HLS (MLS) to indicate its MAC is available for LCT or not, returns the Next State, increases n value then performs LCT using ILS or PDUs (if at least a MAC available for the LCT) and returns to the Next State with n=8.

**Procedure:**

```
[1]+To_Next_5S
[2]  !ILS
[3]    A:?ILS
[4]      Goto A
[3]    ?MLS /*Comment(1)*/
```

--`,,```,,,,````-`-`,,`,,`,`,,`---



Copyright International Organization for Standardization
Provided by IHS under license with ISO
No reproduction or networking permitted without license from IHS Not for Resale

```
[4]     !MLS /*Comment(3)*/
[5]       B:?MLS
[6]         Goto B
[5]       ?ILS /*Comment(4)*/
[6]         !ILS
[7]           C:?ILS
[8]             Goto C
[7]           ?MLS /*Comment(7)*/
[8]             !MLS /*Comment(8)*/
[9]               D:?MLS
[10]                Goto D
[9]               ?ILS /*Comment(9)*/
[9]               ?Otherwise          Inconclusive(6)
[7]           ?Otherwise              Inconclusive(4)
[5]       ?Otherwise                  Inconclusive(2)
[3]    ?HLS /*Comment(2)*/
[4]     !MLS
[5]       E:?HLS
[6]         Goto E
[5]       ?ILS /*Comment(4)*/
[6]         !ILS
[7]           F:?ILS
[8]             Goto F
[7]           ?ALS /*Comment(5)*/
[8]             !Repeat /*Comment(6)*/
[9]               G:?ALS
[10]                !Repeat
[11]                  Goto G
[9]               ?ILS
[10]                !ILS
[11]                  Goto G
[9]               ?MLS /*Comment(7)*/
[10]                !MLS /*Comment(8)*/
[11]                  H:?MLS
[12]                    Goto H
[11]                  ?ILS /*Comment(9)*/
[11]                  ?Otherwise      Inconclusive(8)
[9]               ?Otherwise          Inconclusive(7)
[7]           ?Otherwise              Inconclusive(5)
[5]       ?Otherwise                  Inconclusive(3)
[3]    ?Otherwise                     Inconclusive(1)
```

**Extended Comments:**
(1) IUT transmits MLS to indicate its MAC is not available for the Link Confidence Test. (PC_TCode(6)_Actions)
(2) IUT transmits HLS to indicate its MAC is available for the Link Confidence Test.
(3) Tester transmits MLS to indicate its MAC is not available for the LCT.
(4) IUT returns the Next State from the Signal State with n=7.
(5) IUT transmits PDUs for the Short Link Confidence Test.
(6) The !Repeat operation is the normal operation of PHY when it repeats symbols. PHY repeats symbols only when its input is in ALS.
(7) IUT transmits MLS to indicate its LCT is passed.
(8) Tester transmits MLS to indicate its LCT is passed.
(9) IUT ends in the Next State with n=8.

### 6.3.24.1 To_Next_7E

**Purpose:** This procedure begins when the IUT enters the Next State (n=6), transmits MLS to indicate its MAC is not available or HLS to indicate its MAC is available for LCT. Then goes back to Next State, increases n value and performs the LCT using ILS (if MAC not available) or PDUs (if at least a MAC available) and passes the LCT, ends in the Next State with n=8.



Copyright International Organization for Standardization
Provided by IHS under license with ISO
No reproduction or networking permitted without license from IHS Not for Resale

**Procedure:**

```
[1]+To_Next_5E
[2]  !ILS
[3]   A:?ILS
[4]    Goto A
[3]   ?MLS /*Comment(1)*/
[4]    !MLS /*Comment(3)*/
[5]     B:?MLS
[6]      Goto B
[5]     ?ILS /*Comment(4)*/
[6]      !ILS
[7]       C:?ILS
[8]        Goto C
[7]       ?MLS /*Comment(7)*/
[8]        !MLS /*Comment(8)*/
[9]         D:?MLS
[10]          Goto D
[9]         ?ILS /*Comment(9)*/
[9]         ?Otherwise          Inconclusive(6)
[7]        ?Otherwise           Inconclusive(4)
[5]     ?Otherwise              Inconclusive(2)
[3]   ?HLS /*Comment(2)*/
[4]    !MLS
[5]     E:?HLS
[6]      Goto E
[5]     ?ILS /*Comment(4)*/
[6]      !ILS
[7]       F:?ILS
[8]        Goto F
[7]       ?ALS /*Comment(5)*/
[8]        !Repeat /*Comment(6)*/
[9]         G:?ALS
[10]          !Repeat
[11]           Goto G
[9]         ?ILS
[10]          !ILS
[11]           Goto G
[9]         ?MLS /*Comment(7)*/
[10]          !MLS /*Comment(8)*/
[11]           H:?MLS
[12]            Goto H
[11]           ?ILS /*Comment(9)*/
[11]           ?Otherwise      Inconclusive(8)
[9]           ?Otherwise       Inconclusive(7)
[7]          ?Otherwise        Inconclusive(5)
[5]       ?Otherwise           Inconclusive(3)
[3]   ?Otherwise               Inconclusive(1)
```

**Extended Comments:**

(1) IUT transmits MLS to indicate its MAC is not available for the Extended LCT.
(2) IUT transmits HLS to indicate its MAC is available for the Extended LCT.
(3) Tester transmits MLS to indicate its MAC is not available for the Extended LCT.
(4) IUT enters the Next State with n = 7.
(5) IUT transmits PDUs for the Extended LCT.
(6) The !Repeat operation is the normal opration of PHY when it repeats symbols. PHY repeats symbols only when its input is in ALS.
(7) IUT transmits MLS to indicate its LCT is passed.
(8) Tester transmits MLS to indicate its LCT is passed.
(9) IUT ends in the Next State with n = 8.

--`,,```,,,,````-`-`,,`,,`,`,,`---



Copyright International Organization for Standardization
Provided by IHS under license with ISO
No reproduction or networking permitted without license from IHS
Not for Resale

### 6.3.24.2 To_Next7_ERR

**Purpose:** This procedure begins when the IUT enters Next State (n=7), performs the Link Confidence Test using ERR, and ends with transmitting HLS to indicate the LCT fail.

**Note:** This procedure is performed only when neither the IUT nor the Tester has a MAC.

**Procedure:**

```
[1]+No_MAC_6S /*Comment(1)*/
[2]  !ILS Start TL_Min
[3]    A:?Timeout TL_Min
[4]      !ERR /*Comment(2)*/
[5]        B:?ILS
[6]          Goto B
[5]        ?HLS /*Comment(3)*/
[5]        ?Otherwise              Inconclusive(2)
[3]    ?ILS
[4]      Goto A
[3]    ?Otherwise                  Inconclusive(1)
```

**Extended Comments:**

(1) IUT is in the Next State with n=7.
(2) Tester transmits ERR for the LCT.
(3) IUT ends with transmitting HLS to indicate LCT_Fail > 0. (PC_TCode(7)_Actions)

### 6.3.24.3 To_Next7_BADPDU

**Purpose:** This procedure is performed when the IUT has at least 1 MAC for the Link Confidence Test with n=7.

**Procedure:**

```
[1]+IUT_MAC_6S
[2]  !ILS
[3]    A:?ILS
[4]      Goto A
[3]    ?ALS
[4]      !BADPDU /*Comment(1)*/
[5]        B:?ALS
[6]          !BADPDU
[7]            Goto B
[5]        ?ILS
[6]          !ILS
[7]            Goto B
[5]        ?HLS /*Comment(2)*/
[5]        ?Otherwise              Inconclusive(2)
[3]    ?Otherwise                  Inconclusive(1)
```

**Extended Comments:**

(1) Tester repeats the IUT's frame and changes the FCS to be the incorrect FCS.
(2) IUT ends with transmitting HLS to indicate LCT_Fail > 0. (PC_TCode(7)_Actions)

### 6.3.24.4 Break_In_Next7

**Purpose:** This procedure begins when the IUT transmits HLS to indicate LER > LER_Cutoff and ends in the Break State.



Copyright International Organization for Standardization
Provided by IHS under license with ISO
No reproduction or networking permitted without license from IHS
Not for Resale

**Procedure:**

```
[1]+To_Next7_ERR /*Comment(1)*/
[2]  !HLS /*Comment(2)*/
[3]    A:?HLS /*Comment(3)*/
[4]      Goto A
[3]    ?ILS /*Comment(4)*/
[4]      !ILS
[5]        B:?ILS
[6]          Goto B
[5]        ?QLS /*Comment(5)*/
[5]        ?Otherwise              Inconclusive(2)
[3]    ?Otherwise                  Inconclusive(1)
```

**Extended Comments:**

(1) IUT is in the Signal State with n=7.
(2) Tester transmits HLS to indicate LER > LER_Cutoff. (ISO/IEC 9314-6:1998)
(3) IUT transmits HLS to indicate LER > LER_Cutoff.
(4) IUT returns to the Next State with n=8. (PC-54)
(5) IUT ends with transmitting QLS to indicate it enters the Break State. (PC_RCode(8)_Actions)

### 6.3.25 To_Next_8

**Purpose:** This procedure begins when the IUT enters the Next State with n = 8, Tester transmits MLS indicating its MAC is not available for the Local Loop Test and ends in the Next State with n = 9.

**Note:** This function is used only when IUT has a MAC available for the Local Loop Test.

**Procedure:**

```
[1]+To_Next_7 /*Comment(1)*/
[2]  !ILS
[3]    A:?ILS
[4]      Goto A
[3]    ?HLS /*Comment(2)*/
[4]      !HLS /*Comment(3)*/
[5]        B:?HLS
[6]          Goto B
[5]        ?ILS /*Comment(4)*/
[5]        ?Otherwise              Inconclusive(2)
[3]    ?Otherwise                  Inconclusive(1)
```

**Extended Comments:**

(1) IUT is in the Next State with n=8.
(2) IUT transmits HLS to indicate its MAC is  available for the Local Loop Test.
(PC_TCode(8)_Actions)
(3) Tester transmits HLS to indicate its MAC is available for the Local Loop Test.
(4) IUT ends in the Next State with n=9. (PC-54)

#### 6.3.25.1 To_Next8_N

**Purpose:** This procedure is used to setup the Local Loop Test when the IUT does not make a MAC available. This procedure begins when the IUT enters the Next State (n=8), The Tester transmits HLS to indicate its MAC is available for the Local Loop Test. The IUT signals MLS to indicate its MAC is not available for Local Loop and returns to the Next State with n=9.


Copyright International Organization for Standardization
Provided by IHS under license with ISO
No reproduction or networking permitted without license from IHS
Not for Resale

**Procedure:**

```
[1]+To_Next_7 /*Comment(1)*/
[2]  !ILS
[3]    A:?ILS
[4]      Goto A
[3]    ?MLS /*Comment(2)*/
[4]      !HLS /*Comment(3)*/
[5]        B:?MLS
[6]          Goto B
[5]        ?ILS /*Comment(4)*/
[5]        ?Otherwise        Inconclusive(2)
[3]    ?Otherwise            Inconclusive(1)
```

**Extended Comments:**

(1) IUT is in the Next State with n=8.
(2) IUT transmits MLS to indicate its MAC is not available. (PC_TCode(8)_Actions)
(3) Tester transmits HLS to indicate its MAC is available for the Local Loop.
(4) IUT ends in the Next State with n=9. (PC-54)

### 6.3.25.2 To_Next_8E

**Purpose:** This procedure begins when the IUT enters the Next State (n=8), transmits HLS (MLS) to indicate its MAC is available for the Local Loop Test or not, then ends in the Next State with n=9.

**Procedure:**

```
[1]+To_Next_7E /*Comment(1)*/
[2]  !ILS
[3]    A:?ILS
[4]      Goto A
[3]    ?MLS /*Comment(2)*/
[4]      !MLS /*Comment(4)*/
[5]        B:?MLS
[6]          Goto B
[5]        ?ILS /*Comment(6)*/
[5]        ?Otherwise                Inconclusive(2)
[3]    ?HLS /*Comment(3)*/
[4]      !MLS /*Comment(4)*/
[5]        C:?HLS
[6]          Goto C
[5]        ?ILS /*Comment(5)*/
[5]        ?Otherwise                Inconclusive(3)
[3]    ?Otherwise                    Inconclusive(1)
```

**Extended Comments:**

(1) IUT is in the Next State with n=8.
(2) IUT transmits MLS to indicate its MAC is not available for the Local Loop Test.
(3) IUT transmits HLS to indicate its MAC is available for the Local Loop test.
(4) Tester transmits MLS to indicate its MAC is not available for the Local Loop Test.
(5) IUT ends in the Next State with n=9.

### 6.3.26 To_Next_9

**Purpose:** This procedure begins when the IUT enters the Next State (n=8), transmits HLS (MLS) to indicate its MAC is available for the Local Loop Test or not. Goes back to the Next State with n = 9, performs the Local loop and ends with transmitting HLS to indicate the IUT's MAC is to be connected to PHY or MLS to indicate the IUT's MAC is not to be connected to PHY.



Copyright International Organization for Standardization
Provided by IHS under license with ISO
No reproduction or networking permitted without license from IHS
Not for Resale

**Procedure:**

```
[1]+To_Next_7 /*Comment(1)*/
[2]  !ILS
[3]    A:?ILS
[4]      Goto A
[3]    ?HLS /*Comment(2)*/
[4]      !MLS /*Comment(4)*/
[5]        B:?HLS
[6]          Goto B
[5]        ?ILS /*Comment(5)*/
[6]          !ILS
[7]            D:?ILS
[8]              Goto D
[7]            ?ALS /*Comment(6)*/
[8]              !Repeat /*Comment(8)*/
[9]                E:?ALS
[10]                 !Repeat
[11]                   Goto E
[9]                ?ILS
[10]                 !ILS
[11]                   Goto E
[9]                ?HLS /*Comment(9)*/
[9]                ?Otherwise          Inconclusive(6)
[7]              ?Otherwise            Inconclusive(4)
[6]        ?Otherwise                  Inconclusive(2)
[3]    ?MLS /*Comment(3)*/
[4]      !HLS /*Comment(4)*/
[5]        C:?MLS
[6]          Goto C
[5]        ?ILS /*Comment(5)*/
[6]          !ILS
[7]            H:?ILS
[8]              Goto H
[7]            ?MLS /*Comment(7)*/
[7]            ?Otherwise              Inconclusive(5)
[5]        ?Otherwise                  Inconclusive(3)
[3]    ?Otherwise                      Inconclusive(1)
```

**Extended Comments:**

(1) IUT is in the Next State with n=8.
(2) IUT transmits HLS to indicate its MAC is available for the Local Loop Test.
(3) IUT transmits MLS to indicate its MAC is not available for the Local Loop Test.
(4) A MLS is transmitted by Tester to indicate its MAC is not available for the Local Loop Test, an HLS is transmitted by Tester to indicate its MAC is available for the Local Loop Test.
(5) IUT returns to the Next State from the Signal State with n=9.
(6) IUT performs Local Loop Test with transmitting PDUs. (ALS)
(7) IUT ends with transmitting MLS to indicate its MAC output not to be connected to PHY. (PC_TCode(9)_Actions)
(8) At this point, the tester repeats any PDUs (ALS) received from the IUT for the Local Loop Test. The Loopback ends, then the IUT signals HLS or MLS.
(9) IUT ends with transmitting HLS to indicate its MAC output to be connected to PHY. (PC_RCode(9)_Actions)

### 6.3.27 To_Next_10

**Purpose:** This procedure begins when the IUT signals HLS to indicate its MAC output to be connected to PHY or MLS to indicate its MAC output not to be connected to PHY, ends in the Next State with n = 10.


Copyright International Organization for Standardization
Provided by IHS under license with ISO
No reproduction or networking permitted without license from IHS Not for Resale

**Procedure:**
[1]+To_Next_9
[2] A:?MLS /*Comment(1)*/
[3] !MLS
[4] Goto A
[2] B:?HLS /*Comment(2)*/
[3] !HLS
[4] Goto B
[2] ?ILS /*Comment(3)*/
[2] ?Otherwise Inconclusive

**Extended Comments:**
(1) IUT transmits MLS to indicate its MAC output is not to be connected to PHY in PCM (CFM) Active State.
(2) IUT transmits HLS to indicate its MAC output is to be connected to PHY in PCM (CFM) Active State.
(3) IUT ends in the Next State with n = 10.

### 6.3.28 IN_Join

**Purpose:** This procedure begins when the IUT enters the Next State with n=10 and ends in the Join State.

**Procedure:**
[1]+To_Next_10 /*Comment(1)*/
[2] !ILS
[3] A:?ILS
[4] Goto A
[3] ?HLS /*Comment(2)*/
[3] ?Otherwise Inconclusive

**Extended Comments:**
(1) IUT is in Next State with n=10.
(2) IUT ends in the Join State. (PC-46)

### 6.3.29 IN_Verify

**Purpose:** This procedure begins when the IUT enters the Join State and ends in the Verify State.

**Procedure:**
[1]+IN_Join /*Comment(1)*/
[2] !HLS
[3] A:?HLS
[4] Goto A
[3] ?MLS /*Comment(2)*/
[3] ?Otherwise Inconclusive

**Extended Comments:**
(1) IUT is in the Join State.
(2) IUT ends in the Verify State. (PC-67)

### 6.3.30 IN_Active

**Purpose:** This procedure begins when the IUT enters the Verify State and ends in the Active State.

**Procedure:**
[1]+IN_Verify /*Comment(1)*/
[2] !MLS
[3] A:?MLS
[4] Goto A
[3] ?ILS /*Comment(2)*/
[3] ?Otherwise Inconclusive



Copyright International Organization for Standardization
Provided by IHS under license with ISO
No reproduction or networking permitted without license from IHS Not for Resale

**Extended Comments:**
(1) IUT is in the Verify State.
(2) IUT ends in the Active State. (PC-78)

### 6.3.31 Break_In_Active

**Purpose:** IUT starts in the Active State, keeps monitoring the incoming Line State and ends with entering the Break State when LER is greater than LER_Cutoff.

**Procedure:**
[1]+IN_Active /*Comment(1)*/
[2] !ERR /*Comment(2)*/
[3] A:?ILS
[4] Goto A
[3] ?ALS
[4] Goto A
[3] ?QLS /*Comment(3)*/
[3] ?Otherwise Inconclusive

**Extended Comments:**
(1) IUT is in the Active State.
(2) Tester transmits Error Line State to force IUT returns the Break State.
(3) IUT ends up with entering the Break State. (PC-81b)

## 6.4 ECM Abstract Test Suite

### 6.4.1 Scope

Entity Coordination Management (ECM) performs five distinct functions described as states in the ECM state machine. These ECM functions are:
(1) Connect/Disconnect PCM,
(2) Insert/Deinsert optical bypass switch,
(3) Propagate/Terminate Trace,
(4) Initiate Path Test, and
(5) Participate in Hold Policy.
Most of these functions cannot be directly observed because they occur while PCM is in the OFF state. In fact, the only ECM states which cause observable PCM behavior are the IN(EC1) and TRACE(EC2) states - which means that these are the only ECM states which can be directly observed by a remote tester. In addition, it may be possible to indirectly observe the actions of the INSERT(EC5) and DEINSERT(EC7) states by monitoring the disruption on the physical medium caused by the bypass switch.
This Abstract Test Suite is designed to test only ECM observable functions using the same notation as the PCM notation written in the PCM test suite above.
To perform the connect or insert function, ECM responds to signals from other management entities by sending the PC_Start signal to PCM. Since ECM primarily passes the information on to PCM, it seems that any PCM which can be made to go through its initialization sequence can also be considered to have performed this ECM connect or insert sequence. On the other hand, this sequence cannot be forced by a remote tester, since the IUT has to be connected before it can receive the appropriate PMF_SET_REQ(Connect) frame. Therefore, the ECM connect and insert tests are considered covered by the PCM Connection Initialization Test in the PCM ATS above and not separately tested.
Test cases for the ECM disconnect, deinsert, and Trace propagate and terminate functions are developed below to satisfy the conformance testing of the FDDI ECM. The IN_Active subroutine in section 6.3.30 of the PCM ATS above is re-used in these test cases.

**Note:** These test cases can be performed only if the Parameter Management Protocol, PMF_SET, is implemented.

--`,,```,,,,````-`-`,,`,,`,`,,`---


Copyright International Organization for Standardization
Provided by IHS under license with ISO
No reproduction or networking permitted without license from IHS Not for Resale

### 6.4.2 Test Cases

#### 6.4.2.1 ECM Disconnect Test

##### 6.4.2.1.1 Case-ID: ECM_Disconnect

**Purpose:** Verify that IUT enters the Out state when it receives a Disconnect signal while in the In state.

**Procedure:**

```
[1]+IN_Active /*Comment(1)*/
[2]   !ILS Start TL_Min
[3]    A:?Timeout TL_Min
                    /*Comment(2)*/
[4]     B:?ILS
[5]      Goto B
[4]     ?ALS        /*Comment(3)*/
[5]      C:!PMF_SET_REQ
                    /*Comment(4)*/
[6]       Start PC_React
[7]        ?QLS    /*Comment(5)*/
[8]         !QLS Start TD_Min
[9]           D:?Timeout TD_Min        Pass
                    /*Comment(6)*/
[9]           ?QLS
[10]           Goto D
[9]           ?Otherwise               Fail(4)
[7]          ?ALS
[8]           Goto C
[7]          ?Otherwise               Fail(3)
[7]          ?Timeout PC_React        Fail(3)
[4]     ?Otherwise                    Fail(2)
[3]    ?ILS
[4]     Goto A
[3]    ?Otherwise                    Fail(1)
```

**Extended Comments:**
(1) IUT's PCM is in the Active state. (PC8)
(2) IUT's PCM has been transmitting ILS for TL_Min in the Active state.
(3) IUT's PCM transmits ALS in the Active state after TL_Min expires. IUT is in the In state. (PC88b, EC1)
(4) Tester sends a Disconnect request signal to cause IUT to change its state. (In this case, Tester shall prepare a PMF SET Request frame containing the fddiSMTStationAction of Disconnect to be invoked. It sends this frame to force IUT to enter the Leave state (IUT's PCM to enter the Off state) and waits for the IUT to respond. (EC13))
(5) IUT's PCM is in the Off state. IUT is in the Leave state. (PC0, EC3)
(6) TD_Min expires. IUT enters the Out state and waits for Connect request signal. (EC30, PC0)

**Reasons for Failure:**
(1) IUT's PCM does not transmit ILS in the Active state or TL_Min is not expired.
(2) IUT's PCM does not transmit ILS or ALS in the Active state.
(3) IUT's PCM is not in the Active state or the Off state or PC_React expires
(4) IUT's PCM does not transmit QLS while IUT in the Leave state or TD_Min is not expired.

#### 6.4.2.2 ECM Deinsert Test

##### 6.4.2.2.1 Case-ID: ECM_Deinsert

**Purpose:** Verify that IUT deinserts the bypass switch and enters the Out state when it receives a Disconnect signal while in the In state.

--`,,```,,,,````-`-`,,`,,`,`,,`---



Copyright International Organization for Standardization
Provided by IHS under license with ISO
No reproduction or networking permitted without license from IHS Not for Resale

**Procedure:**

```
[1]+IN_Active       /*Comment(1)*/
[2]   !ILS Start TL_Min
[3]    A:?Timeout TL_Min
                    /*Comment(2)*/
[4]     B:?ILS
[5]      Goto B
[4]     ?ALS        /*Comment(3)*/
[5]      C:!PMF_SET_REQ
                    /*Comment(4)*/
[6]       Start PC_React
[7]        ?QLS     /*Comment(5)*/
[8]         !QLS Start TD_Min
[9]          D:?Timeout TD_Min
                    /*Comment(6)*/
[10]          Start I_Max
[11]           ?Timeout I_Max
                    /*Comment(7)*/
[12]            !SMT_DATA
                    /*Comment(8)*/
[13]             Start D_Max
[14]              ?SMT_DATA        Pass
                    /*Comment(9)*/
[14]              ?Otherwise       Fail(6)
[14]              ?Timeout D_Max   Fail(6)
[11]           ?Otherwise          Fail(5)
[9]          ?QLS
[10]          Goto D
[9]          ?Otherwise           Fail(4)
[7]        ?ALS
[8]         Goto C
[7]        ?Otherwise            Fail(3)
[7]        ?Timeout PC_React     Fail(3)
[4]     ?Otherwise               Fail(2)
[3]    ?ILS
[4]     Goto A
[3]    ?Otherwise               Fail(1)
```

**Extended Comments:**

(1) IUT's PCM is in the Active state. (PC8)
(2) IUT's PCM has been transmitting ILS for TL_Min in the Active state.
(3) IUT's PCM transmits ALS in the Active state after TL_Min expires. IUT is in the In state. (PC88b, EC1)
(4) Tester sends a Disconnect request signal to cause IUT to change its state. (In this case, Tester shall prepare a PMF SET Request frame containing the fddiSMTStationAction of Disconnect to be invoked. It sends this frame to force IUT to enter the Leave state (IUT's PCM to enter the Off state) and waits for the IUT to respond. (EC13))
(5) IUT's PCM is in the Off state. IUT is in the Leave state. (PC0, EC3)
(6) TD_Min expires. IUT enters the Deinsert state. (EC37, EC7)
(7) I_Max expires. IUT enters the Out state. Now IUT is in the bypass mode (IUT withdraws itself from the ring). (EC70, PC0)
(8) Tester sends a SMT_DATA frame to check the continuity of the restored ring. (In this case, Tester shall prepare a SMT frame containing its own data. It sends this frame on the restored ring and waits for the frame to come back.)
(9) The SMT_DATA frame comes back to the tester. The continuity of the ring is restored.


Copyright International Organization for Standardization
Provided by IHS under license with ISO
No reproduction or networking permitted without license from IHS
Not for Resale

**Reasons for Failure:**
(1) IUT's PCM does not transmit ILS in the Active state or TL_Min is not expired.
(2) IUT's PCM does not transmit ILS or ALS in the Active state.
(3) PC_React expires or IUT's PCM does not enter the Off state. IUT does not enter the Leave state.
(4) IUT's PCM does not transmit QLS or TD_Min is not expired.
(5) I_Max is not expired.
(6) D_Max expires but the SMT_DATA frame does not come back to the tester. The ring is not restored.

### 6.4.2.3 ECM Trace Tests:

In this series of test, there will be two defined quantities for Trace_Max. The first is Trace_Max_Hi, which will be longer than the normal default timer of 7 seconds. The other, Trace_Max_Lo, will be shorter than the normal default timer. Both quantities will be set by the tester depending on the test purpose. Since two Points of Control and Observation (PCOs) are needed when conducting test cases 6.4.2.3.4 - 6.4.2.3.12, for classification reason, a PCO for an event line is denoted by sequence of capital letters, which indicates a tester post, appears between the indentation level number and the label, for example:

[4]TB A: ?ALS

Where TB is denoted tester port B.

#### 6.4.2.3.1 Case-ID: Trace_Max

**Purpose:** Verify that the IUT remains in the Trace state for Trace_Max. This test case is applicable to a station containing at least one MAC and has one port connected to the tester.

**Test Setup:** See figure 6.

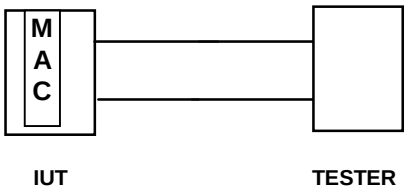


Figure 6 - Tester Configuration for Indicated Cases

**Procedure:**
[1]+IN_Trace /*Comment(1)*/
[2] Start Trace_Max_Lo
[3] A:?MLS
[4] Goto A
[3] ?Timeout Trace_Max_Lo Pass
/*Comment(2)*/
[3] ?Otherwise Fail

**Extended Comments:**
(1) IUT is in the Trace state.
(2) IUT maintains in the Trace state for Trace_Max.

**Reason for Failure:**
IUT does not repeat MLS for Trace_Max.

#### 6.4.2.3.2 Case-ID: Trace_Term

**Purpose:** Verify that the IUT terminates the Trace process when a QLS is received. This test case is applicable to a station containing at least one MAC and has one port connected to the tester.

**Test Setup:** See figure 6.

--`,,```,,,,````-`-`,,`,,`,`,,`---



Copyright International Organization for Standardization
Provided by IHS under license with ISO
No reproduction or networking permitted without license from IHS Not for Resale

**Procedure:**

```
[1]+IN_Trace  /*Comment(1)*/
[2]    Start Trace_Max_Hi
[3]     ?MLS
[4]      !QLS Start Trace_React
                 /*Comment(2)*/
[5]       A:?MLS
[6]        Goto A
[5]       ?QLS                        Pass
                 /*Comment(3)*/
[5]       ?Otherwise                  Fail(2)
[5]       ?Timeout Trace_React        Fail(2)
[3]     ?Otherwise                    Fail(1)
[3]     ?Timeout Trace_Max_Hi         Inconclusive
```

**Extended Comments:**
(1) IUT is in the Trace state.
(2) Tester continuously sends QLS to force IUT to terminate the Trace.
(3) Tester receives QLS from IUT indicating the IUT has terminated Trace before Trace_React timed out.

**Reason for Failure:**
(1) IUT does not transmit MLS.
(2) IUT does not transmit MLS or QLS or Trace_React has expired.

### 6.4.2.3.3 Case-ID: To_Leave

**Purpose:** Verify that IUT transition to the Leave state when it remains in the Trace state for longer than Trace_Max. This test case is applied to station containing at least one MAC and one port connected to the Tester.

**Test Setup:** See figure 6.

**Procedure:**

```
[1]+IN_Trace  /*Comment(1)*/
[2]    Start Trace_Max_Hi
[3]     A:?MLS
[4]      Goto A
[3]     ?Timeout Trace_Max_Hi
                 /*Comment(2)*/
[4]      B:?MLS
[5]       Goto B
[4]      ?QLS                        Pass
                 /*Comment(3)*/
[4]      ?Otherwise                  Fail(2)
[3]     ?Otherwise                    Fail(1)
```

**Extended Comments:**
(1) IUT is in the Trace state.
(2) Trace_Max expires. IUT has been in the Trace state for Trace_Max.
(3) IUT terminates the Trace. Receive QLS.

**Reason for Failure:**
(1) IUT does not transmit MLS.
(2) IUT does not transmit MLS or QLS.


Copyright International Organization for Standardization
Provided by IHS under license with ISO
No reproduction or networking permitted without license from IHS Not for Resale

### 6.4.2.3.4 Case-ID: Trace_Mac_Prop

**Purpose:** Verify that IUT terminates the Trace process when it receives MLS on its port which is connected to a MAC (within a station). This test case is applied to a single port station or an B port of SM-DAS Thru configuration (figure 7) or an A or B port of DM-DAS Thru configuration (figure 8).

**Test Setup:** See figure 7 and figure 8.

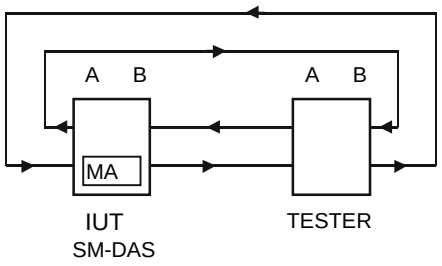


Figure 7 - Tester Configuration for Indicated Cases

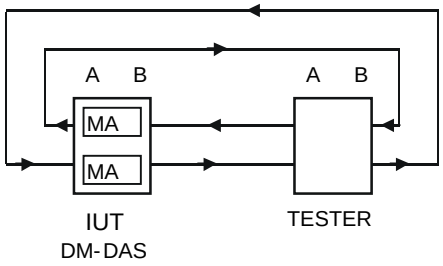


Figure 8 - Tester Configuration for Indicated Cases

**Procedure:**

```
[1]TA       +IN_Active_PDR
[2]TB        +IN_Active_PDR
[3]TA          !MLS Start Trace_React
[4]TB    A:     ?ALS
[5]               Goto A
[4]TB            ?ILS
[5]               Goto A
[4]TB            ?QLS                    Pass
                       /*Comment*/
[4]TB            ?Otherwise              Fail(1)
[4]TA            ?QLS                    Pass
                    /*Comment*/
[4]TA            ?Otherwise              Fail(1)
[4]              ?Timeout Trace_React    Fail(1)
```

**Extended Comments:**
IUT propagates the Trace from its B port to its MAC (figure 7) or from its A or B port to its MAC (figure 8) and terminates the Trace by transmitting QLS. Receive QLS on Tester B and A ports (figure 7 or 8).

**Reason for Failure:**
(1) IUT does not transmit ALS, ILS or QLS or Trace_React has expired.



Copyright International Organization for Standardization
Provided by IHS under license with ISO
No reproduction or networking permitted without license from IHS
Not for Resale

### 6.4.2.3.5 Case-ID: Trace_Prop_Max 1

**Purpose:** Verify that IUT propagates the Trace from its A port to the upstream B port by generating MLS for Trace_Max. This test case is applied to a SM-DAS Thru configuration on the secondary ring.

**Test Setup:** See figure 7.

**Procedure:**

```
[1]TA              +IN_Active_PDR
[2]TB       +IN_Active_PDR
[3]TB   A:    !MLS Start Trace_React
[4]TA          ?MLS
[5]             Start Trace_Max_Lo
[6]TA   B:      ?MLS
[7]              Goto B
[6]              ?Timeout Trace_Max_Lo  Pass
                    /*Comment*/
[6]TA            ?Otherwise             Fail(2)
[4]TA          ?ILS
[5]             Goto A
[4]TA          ?ALS
[5]             Goto A
[4]TA          ?Otherwise             Fail(1)
[4]            ?Timeout Trace_React   Fail(1)
```

**Extended Comments:**
Trace_Max expires. IUT has propagated the Trace for Trace_Max.

**Reason for Failure:**
(1) IUT does not transmit ILS, ALS or MLS or Trace_React has expired.
(2) IUT does not transmit MLS.

### 6.4.2.3.6 Case-ID: Trace_Ack1

**Purpose:** Verify that IUT acknowledges the termination of Trace when it receives QLS while propagating the Trace from its A port to the upstream B port. This test case is applicable to a SM-DAS Thru configuration on the secondary ring.

**Test Setup:** See figure 7.

**Procedure:**

```
[1]TA       +IN_Active_PDR
[2]TB        +IN_Active_PDR
[3]TB    A:    !MLS Start Trace_React
[4]TA           ?MLS
[5]TA            !QLS Start Trace_React
[6]TA    B:      ?MLS
[7]               Goto B
[6]TA             ?QLS                  Pass
                        /*Comment*/
[6]TA             ?Otherwise            Fail(2)
[6]               ?Timeout Trace_React  Fail(2)
[6]TB             ?QLS                  Pass
                        /*Comment*/
[6]TB             ?Otherwise            Fail(2)
[4]TA           ?ALS
[5]              Goto A
[4]TA           ?ILS
[5]              Goto A
[4]TA           ?Otherwise            Fail(1)
[4]             ?Timeout Trace_React  Fail(1)
```


Copyright International Organization for Standardization
Provided by IHS under license with ISO
No reproduction or networking permitted without license from IHS Not for Resale

**Extended Comments:**
IUT transmits QLS to acknowledge the termination of Trace. Receive QLS on both tester ports.

**Reason for Failure:**
(1) IUT does not transmit MLS, ALS, ILS or Trace_React is expired.
(2) IUT does not transmit MLS, QLS or Trace_React is expired.

### 6.4.2.3.7 Case-ID: Trace_Prop_Max2

**Purpose:** Verify that IUT propagates the Trace from an M Port to an upstream M Port (within a station) for Trace_Max. This test is applicable when there is no MAC in the internal token path between active M ports.

**Test Setup**: See figure 9. (Assume M1 and M4 are inserted into the primary path)

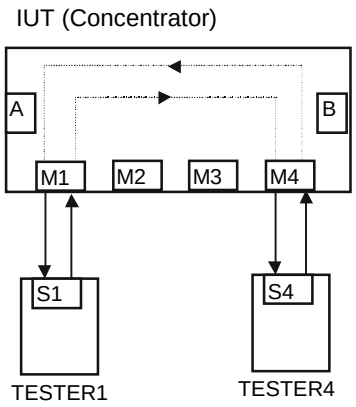


Figure 9 - Tester Configuration for Indicated Cases

**Procedure:**

| | | | |
|---|---|---|---|
| [1]TS1 | | +IN_Active_PDR | |
| [2]TS4 | | +IN_Active_PDR | |
| [3]TS4 | A: | !MLS Start Trace_React | |
| [4]TS1 | | ?MLS | |
| [5]TS1 | | Start Trace_Max_Lo | |
| [6]TS1 | B: | ?MLS | |
| [7] | | Goto B | |
| [6]TS1 | | ?Timeout Trace_Max_Lo /*Comment*/ | Pass |
| [6]TS1 | | ?Otherwise | Fail(2) |
| [4]TS1 | | ?ILS | |
| [5] | | Goto A | |
| [4]TS1 | | ?ALS | |
| [5] | | Goto A | |
| [4]TS1 | | ?Otherwise | Fail(1) |
| [4]TS4 | | ?Timeout Trace_React | Fail(1) |

**Extended Comments:**
Trace_Max expires. IUT has propagated the Trace for Trace_Max.

**Reason for Failure:**
(1) IUT does not transmit ILS, MLS or ALS or Trace_React has expired.
(2) IUT does not transmit MLS.



Copyright International Organization for Standardization
Provided by IHS under license with ISO
No reproduction or networking permitted without license from IHS
Not for Resale

### 6.4.2.3.8 Case-ID: Trace_Ack2

**Purpose:** Verify that IUT acknowledges the termination of Trace when it receives QLS while propagating the Trace from an M port to an upstream M port (within a station). This test is applicable when there is no MAC in the internal token path between active M ports.

**Test Setup:** See figure 9. (Assume M1 and M4 are inserted into primary path)

**Procedure:**

```
[1]TS1      +IN_Active_PDR
[2]TS4      +IN_Active_PDR
[3]TS4   A:  !MLS Start_Trace_React
[4]TS1        ?MLS
[5]TS4         !QLS Start Trace_React
[6]TS1   B:    ?MLS
[7]              Goto B
[6]TS1         ?QLS                    Pass
                    /*Comment*/
[6]TS1         ?Otherwise              Fail(2)
[6]TS4         ?QLS                    Pass
                    /*Comment*/
[6]TS4         ?Otherwise              Fail(2)
[6]TS4         ?Timeout Trace_React    Fail(2)
[4]TS1        ?ALS
[5]            Goto A
[4]TS1        ?ILS
[5]            Goto A
[4]TS1        ?Otherwise              Fail(1)
[4]TS4        ?Timeout Trace_React    Fail(1)
```

**Extended Comments:**
IUT transmits QLS to acknowledge the termination of Trace. Receive QLS on both testers.

**Reason for Failure:**
(1) IUT does not transmit MLS, ALS or ILS or Trace_React is expired.
(3) IUT does not transmit MLS or QLS or Trace_React is expired.

### 6.4.2.3.9 Case-ID: Trace_Prop_Max3

**Purpose:** Verify that IUT propagates the Trace from the A Port to the M Port internally, for Trace_Max. This test is applicable for any station (concentrator) that does not have a MAC in the token path.

**Test Setup:** See figure 10. (Assume M4 is inserted into the primary path)

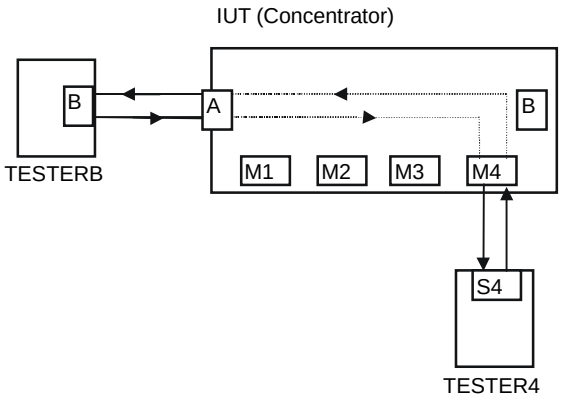


Figure 10 - Tester Configuration for Indicated Cases


Copyright International Organization for Standardization
Provided by IHS under license with ISO
No reproduction or networking permitted without license from IHS
Not for Resale

**Procedure:**

```
[1]TB      +IN_Active_PDR
[2]TS4      +IN_Active_PDR
[3]TS4  A:   !MLS Start Trace_React
[4]TB          ?MLS
[5]TB           Start Trace_Max_Lo
[6]TB    B:      ?MLS
[7]                Goto B
[6]TB              ?Timeout Trace_Max_Lo  Pass
                       /*Comment*/
[6]TB              ?Otherwise             Fail(2)
[4]TB          ?ALS
[5]             Goto A
[4]TB          ?ILS
[5]             Goto A
[4]TB          ?Otherwise                 Fail(1)
[4]TS4         ?Timeout Trace_React       Fail(1)
```

**Extended Comments:**
IUT has propagated the Trace for Trace_Max.

**Reason for Failure:**
(1) IUT does not transmit MLS, ALS or ILS or Trace_React is expired.
(2) IUT does not transmit MLS.

### 6.4.2.3.10 Case-ID: Trace_Ack3

**Purpose:** Verify that IUT acknowledges the termination of Trace when it receives QLS while propogating the Trace from an A Port to the upstream M Port (within a station). This test is applicable for any station (concentrator) that does not have a MAC in the token path.

**Test Setup:** See figure 10. (Assume M4 is inserted in the primary path).

**Procedure:**

```
[1]TB      +IN_Active_PDR
[2]TS4      +IN_Active_PDR
[3]TS4  A:   !MLS Start Trace_React
[4]TB          ?MLS
[5]TB           !QLS Start Trace_React
[6]TS4  B:      ?MLS
[7]                Goto B
[6]TS4             ?QLS                   Pass
                       /*Comment*/
[6]TS4             ?Otherwise             Fail(2)
[6]TS4             ?Timeout Trace_React   Fail(2)
[4]TB          ?ALS
[5]             Goto A
[4]TB          ?ILS
[5]             Goto A
[4]TB          ?Otherwise                 Fail(1)
[4]TB          ?Timeout Trace_React       Fail(1)
```

**Extended Comments:**
IUT transmits QLS to acknowledge the termination of Trace.

**Reason for Failure:**
(1) IUT does not transmit MLS, ALS or ILS or Trace_React has expired.
(2) IUT does not transmit MLS or QLS or Trace_React expired.

--`,,```,,,,````-`-`,,`,,`,`,,`---



Copyright International Organization for Standardization
Provided by IHS under license with ISO
No reproduction or networking permitted without license from IHS Not for Resale

### 6.4.2.3.11 Case-ID: Trace_Prop_Max4

**Purpose**: Verify that the IUT propogates Trace from the B Port, internally, to the M1 Port, by generating MLS for Trace_Max_Hi. This test is applicable to stations that do not have a MAC in the Trace Path.

**Test Setup:** See figure 11. (Assume M1 is inserted into the primary ring).

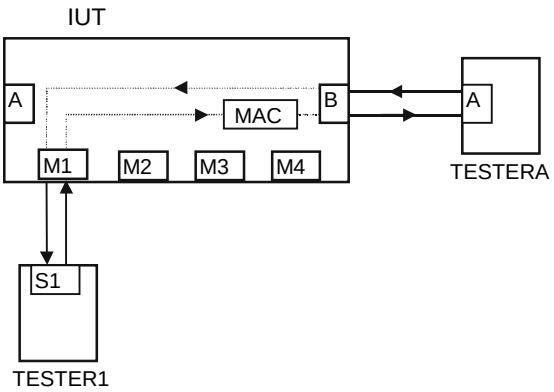


Figure 11 - Tester Configuration for Indicated Cases

**Procedure:**

```
[1]TS1  +IN_Active_PDR
[2]TA      +IN_Active_PDR
[3]TA   A:  !MLS Start Trace_React
[4]TS1      ?MLS
[5]TS1       Start Trace_Max_Lo
[6]TS1 B:     ?MLS
[7]             Goto B
[6]TS1        ?Timeout Trace_Max_Lo   Pass
                /*Comment*/
[6]TS1        ?Otherwise              Fail(2)
[4]TS1      ?ALS
[5]           Goto A
[4]TS1      ?ILS
[5]           Goto A
[4]TS1      ?Otherwise              Fail(1)
[4]TS4      ?Timeout Trace_React    Fail(1)
```

**Extended Comments:**
IUT propagates the Trace for Trace_Max.

**Reason for Failure:**
(1) IUT does not transmit MLS.
(2) IUT does not transmit ALS, ILS or MLS or Trace_React has expired.

### 6.4.2.3.12 Case-ID: Trace_Ack4

**Purpose:** Verify that IUT acknowledges the termination of Trace when it receives QLS while propagating the Trace from its B port to the upstream M1 port (within a station). This test case is applicable to stations that do not have a MAC in the Trace path.

**Test Setup:** See figure 11. (Assume M1 is inserted into the primary ring).

**Procedure:**

```
[1]TS1      +IN_Active_PDR
[2]TA         +IN_Active_PDR
[3]TA     A:    !MLS Start Trace_React
[4]TS1           ?MLS
[5]TA             !QLS Start Trace_React
```


Copyright International Organization for Standardization
Provided by IHS under license with ISO
No reproduction or networking permitted without license from IHS
Not for Resale

```
[6]TS1   B:      ?MLS
[7]                Goto B
[6]TS1           ?QLS                    Pass
                      /*Comment*/
[6]TS1           ?Otherwise              Fail(2)
[6]TA            ?Timeout Trace_React    Fail(2)
[4]TS1         ?ALS
[5]              Goto A
[4]TS1         ?ILS
[5]              Goto A
[4]TS1         ?Otherwise                Fail(1)
[6]TA          ?Timeout Trace_React      Fail(1)
```

**Extended Comments:**
IUT transmits QLS to acknowledge the termination of Trace.

**Reason for Failure:**
(1) IUT does not transmit MLS, ALS or ILS or Trace_React has expired.
(2) IUT does not transmit MLS or QLS or Trace_React has expired.

### 6.4.3 Subroutine used for internal function call:

#### 6.4.3.1 IN_Trace

**Purpose:** Force IUT to enter the Trace state.

**Procedure:**

```
[1]+IN_Active /*Comment(1)*/
[2]   !ILS
[3]    A:?ILS
[4]     Goto A
[3]    ?ALS
[4]     !Lower_Claim Start T_Non_Op
              /*Comment(2)*/
[5]      B:?IUT_Claim /*Comment(3)*/
[6]       Goto B
[5]      ?Timeout T_Non_Op
              /*Comment(4)*/
[6]       !ILS /*Comment(5)*/
[7]        C:?IUT_Beacon /*Comment(6)*/
[8]         Goto C
[7]        ?IUT_D_Beacon
              /*Comment(7)*/
[8]         Goto C
[7]        ?MLS /*Comment(8)*/
[7]        ?Otherwise            Inconclusive
[5]      ?ALS
[6]       !Lower_Claim
[7]        Goto B
[5]      ?Otherwise              Inconclusive
[3]    ?Otherwise                Inconclusive
```

#### 6.4.3.2 IN_Active_PDR

**Purpose:** This subroutine is used in the ECM Trace action to ensure that the IUT has completed PC(88b) and transmitting ALS.



Copyright International Organization for Standardization
Provided by IHS under license with ISO
No reproduction or networking permitted without license from IHS
Not for Resale

**Procedure:**

```
[1]  +IN_Active
[2]      !ILS
[3]          A:?ILS
[4]              Goto A
[3]          ?ALS
[3]          ?Otherwise    Inconclusive
```

# 7 CFM conformance tests

ISO/IEC 9314-6:1998 specifies the configuration Management (CFM) rules for ports, paths and MACs for each of the following types of FDDI Nodes:

- Dual Attachment Station (DAS);
- Single Attachment Station (SAS);
- Dual Attachment Concentrator (DAC);
- Single Attachment Concentrator (SAC).

This clause specifies four test groups, each of which tests a particular type of FDDI node.

## 7.1 Test purpose

Each test group in this clause verifies the correct operation of Configuration Management (CFM) for a particular type of FDDI node.

### 7.1.1 Path configuration

The following test groups verify that the IUT configures its ports, MACs and paths as specified in ISO/IEC 9314-6:1998, when its ports are connected to various combinations of tester A, B, S and M ports. Each test case is accompanied by a configuration drawing, showing the connections between the IUT and the Tester or Testers, and the internal paths through the IUT. At the bottom of the figure for each test case is a figure of the ring maps for the test configuration, showing the order of the MACs on each ring. Note that the relative order of MACs is significant, but the map can start with any MAC.

Whenever a DAS Tester is needed it is a dual MAC station. In the configuration and ring map figures that accompany each test case, the tester MAC associatd with the primary path (i.e., the MAC on the primary path when the Tester is in the thru CF_State) is labeled "B" and the Tester MAC associated with secondary path is labeled "A."

For single MAC test case figures, the IUT MAC is labeled "1". For the dual MAC test cases, the IUT MAC located on the primary ring in the thru CF_State is labeled "1", and the IUT MAC located on the secondary ring in the thru CF_State is labeled "2".

The correct IUT configuration for each configuration test case shall be verified by direct observation of the token paths through the IUT using the normal NIF procedures to construct logical ring maps. Because each active IUT port is connected to a Tester port (or not connected to any other port), there is complete visibility of where each path enters and exits the IUT.

The neighbor notification protocol may take some time to complete after a ring is initialized. The NIF protocol used to form ring maps is defined in ISO/IEC 9314-6:1998. The completion of the ring map can be determined when the set of MAC addresses and upstream neighbor MAC addresses listed in the NIF frames forms a consistent closed ring. The tester used to form the ring map shall be capable of determining when the complete ring is known.



Copyright International Organization for Standardization
Provided by IHS under license with ISO
No reproduction or networking permitted without license from IHS
Not for Resale

### 7.1.2 MIB

The test groups of this clause verify that the configuration relevant IUT MIB attributes are set to values consistent with the configuration. The values of the specified attributes shall be verified with PMF Get Request and Response frames. The CF-State attribute shall be verified for each test case. The following port attributes shall be verified for each port and test case:

- CurrentPathType;
- MyTypeType;
- NeighborTypeType;
- RequestedPathsType;

### 7.1.3 Events and conditions

While this CFM test will not provide a detailed test of the Status Report Protocol or of SRF frames, it does provide a reasonably detailed test of the configuration relevant aspects of status reporting. The only additional test actions required to accomplish this are to verify the generation of the appropriate SRF frames by the IUT after each configuration change. Note that SRF events depend upon the sequence of the configuration changes.

Each test group in this clause verifies that appropriate SRF frames are generated for the following events and conditions:

- Peer Wrap Condition;
- MAC Path Change Event;
- Port Path Change Event;
- Undesirable Connection Event.

## 7.2 Test constraints

The following constraints apply to the tests specified in this clause.

### 7.2.1 Permitted path bits

The conformance tests in this clause verify conformance of FDDI CMT for those stations using the default values of the CFM PermittedPath bits for Ports and MACs. They do not test CFM for cases where PermittedPath bits are set to values other than their default values, nor for implementations that choose to restrict the MAC path choices for alternate bits as allowed by ISO/IEC 9314-6:1998. Note that with default values, the Requested - Paths for Port Resources never rely upon the alternate bits to determine the RequestedPaths.

### 7.2.2 Order of test cases

Each test group is an ordered set of test cases. The test cases of each test group specified in this clause shall be executed in the order specified. This is necessary to verify events, which are a product of the specific configuration change, rather than the final configuration state.

## 7.3 Test equipment

The tester for CMT conformance tests consists of a conforming FDDI station with a general FDDI ring management capability. The tester shall be capable of being configured to simultaneously provide any combination of two A, B, S and M ports with a MAC associated with each A, B or S exit port and appropriate management software to:

- issue PMF Get Request Frames for the specified attributes and record and display or verify the response frame of the IUT;

- record and display or verify the SRF frames generated by the IUT;

- construct a logical ring map showing the logical paths through the IUT and the location of MACs in the IUT. This shall be done by direct observation of frames entering and exiting the IUT (rather than by relying on the values of the IUTs MIB) and by operation of the NIF protocol.



Copyright International Organization for Standardization
Provided by IHS under license with ISO
No reproduction or networking permitted without license from IHS Not for Resale

In each case the connection policy of the tester shall be to accept all connection types except the illegal M-to-M connection.

It is desirable that the tester be one station that is capable of dynamically configuring its ports in accordance to a test script (so that manual recabling is not required) and of either recording IUT responses for later analysis or of verifying them in real time and recording the test verdict for each case, to automate the testing process. However it is possible to run the entire test suite using several management stations that between them provide 2 ports of each kind (A, B, M and S) by manually recabling at each test step and manually recording the test results from the management displays maintained by the tester stations.

## 7.4 DAS CFM Conformance Test Group

This test group verifies the conformance of Configuration Management (CFM) for Dual Attachment Stations (DAS). It consists of 24 ordered test cases that exhaustively test each of the 25 possible configuration states of a DAS, except for the isolated case, which is not externally testable. The test group tests a representative but not exhaustive set of configuration state transitions. Table 1 summarizes the 24 configuration state test cases.

Note that both the single and dual MAC DAS are verified with the same test group. In each case the test actions are identical for single and dual MAC DAS, however the pass_fail criteria are different. Therefore each test case includes separate pass-fail criteria for the single and dual MAC DAS tests.

The correct value of the following MIB parameters shall be verified using PMF Get Request Frames for each test case configuration except case number 1 (isolated):

- CF-State;
- A:CurrentPathType;
- A:MyTypeType;
- A:NeighborTypeType;
- A:RequestedPathsType;
- B:CurrentPathType;
- B:MyTypeType;
- B:NeighborTypeType;
- B:RequestedPathsType.

The SRF verification portion of the test requires that the test cases be executed in the order specified. In DAS test cases, DAS-1 through DAS_16, the generation of appropriate SRF frames for each configuration test step shall be verified for the following events and conditions:

- Peer Wrap Condition;
- MAC Path Change Event;
- Port Path Change Event;
- Undesirable Connection Event.

In test cases DAS_17 through DAS_24 two separate configuration events occur between each case. The order and timing of these events is not specified in this test, therefore the precise sequence of events generated is also not specified and is not verified in the Pass_Fail criteria. Conditions, however, are not dependent upon the order of the configuration changes and appropriate SRF announcement of the Peer Wrap Condition is a Pass_Fail criterion for test cases DAS_1 through DAS_24.

Each test case identifies a figure that shows the test configuration for that case, and the logical ring maps for that case. There are separate figures for single and dual MAC cases.

--`,,```,,,,````-`-`,,`,,`,`,,`---



Copyright International Organization for Standardization
Provided by IHS under license with ISO
No reproduction or networking permitted without license from IHS Not for Resale

### 7.4.1 Case-ID: DAS_1

**Test Purpose:** Test configuration when IUT A is connected to a B port and IUT B is not connected.

**Initial Condition:** IUT A and B not connected. The IUT is isolated.

**Test Actions:** Connect IUT A to Tester B port.

**Pass_Fail Criteria:**

**a. Single MAC Station**
IUT configuration: see figure 12.
MIB:
- SMT.CF_State = c_wrap_a;
- A:CurrentPathType = concatenated;
- A:MyTypeType = a;
- A:NeighborTypeType = b;
- A:RequestedPathsType = Peer;
- B:CurrentPathType = isolated;
- B:MyTypeType = b;
- B:NeighborTypeType = none;
- B:RequestedPathsType = none.

SRF Report:
- Peer Wrap Condition;
- MAC Path Change Event;
- Port Path Change Event.

**b. Dual MAC Station**
IUT configuration: see figure 15. The MIB and SRF Report are the same as for a Single MAC Station.

### 7.4.2 Case-ID: DAS_2

**Test Purpose:** Test configuration when IUT A is connected to a B port and IUT B is connected to an A port.

**Initial Condition:** IUT A port is connected to Tester B port.

**Test Actions:** Connect IUT B to Tester A port.

**Pass_Fail Criteria:**

**a. Single MAC Station**
IUT configuration: see figure 12. MAC 1 is on the primary ring (the ring that exits through the B port).
MIB:
- SMT.CF-State = thru;
- A:CurrentPathType = thru;
- A:MyTypeType = a;
- A:NeighborTypeType = b;
- A:RequestedPathsType = Peer;
- B:CurrentPathType = thru;
- B:MyTypeType = b;
- B:NeighborTypeType = a;
- B:RequestedPathsType = Peer.

SRF Report:
- MAC Path Change Event;
- Port Path Change Event.

**b. Dual MAC Station**
IUT configuration: see figure 15. MAC 1 is the MAC on the primary ring (the ring that exits through the B port), while MAC 2 is on the secondary Ring. The MIB and SRF Report are the same as for a Single MAC Station.



Copyright International Organization for Standardization
Provided by IHS under license with ISO
No reproduction or networking permitted without license from IHS Not for Resale

### 7.4.3 Case-ID: DAS_3

**Test Purpose:** Test configuration when IUT B is connected to an A port and IUT A is not connected.

**Initial Condition**: IUT A port is connected to Tester B port, IUT B port is connected to Tester A port.

**Test Actions:** Disconnect IUT A port.

**Pass_Fail Criteria:**

**a. Single MAC Station**
IUT configuration: see figure 12
MIB:
- SMT.CF-State = c_wrap_b;
- A:CurrentPathType = isolated;
- A:MyTypeType = a;
- A:NeighborTypeType = none;
- A:RequestedPathsType = none;
- B:CurrentPathType = concatenated;
- B:MyTypeType = b;
- B:NeighborTypeType = a;
- B:RequestedPathsType = Peer.

SRF Report:
- Peer Wrap Condition;
- MAC Path Change Event;
- Port Path Change Event.

**b. Dual MAC station**
IUT configuration: see figure 15. MAC 1 remains the B port exit MAC. The MIB and SRF Report are the same as for a Single MAC Station.

### 7.4.4 Case-ID: DAS_4

**Test purpose:** Test configuration when IUT A is connected to a M port and IUT B is connected to an A port.

**Initial condition:** IUT B port is connected to Tester A port.

**Test actions:** Connect IUT A to Tester M port.

**Pass_Fail criteria:**

**a. Single MAC Station**
IUT configuration: see figure 12.
MIB:
- SMT.CF-State = c_wrap_b;
- A:CurrentPathType = isolated;
- A:MyTypeType = a;
- A:NeighborTypeType = m;
- A:RequestedPathsType = Tree;
- B:CurrentPathType = concatenated;
- B:MyTypeType = b;
- B:NeighborTypeType = a;
- B:RequestedPathsType = Peer.

SRF Report:
- Peer Wrap Condition.


Copyright International Organization for Standardization
Provided by IHS under license with ISO
No reproduction or networking permitted without license from IHS Not for Resale

**b. Dual MAC Station**
IUT configuration: see figure 15.
MIB:
- SMT.CF-State = wrap_ab;
- A:CurrentPathType = secondary;
- A:MyTypeType = a;
- A:NeighborTypeType = m;
- A:RequestedPathsType = Tree;
- B:CurrentPathType = primary;
- B:MyTypeType = b;
- B:NeighborTypeType = a;
- B:RequestedPathsType = Peer.

SRF Report:
- MAC Path Change Event;
- Port Path Change Event;
- Peer Wrap Condition.

### 7.4.5 Case-ID: DAS_5

**Test Purpose:** Test configuration when A is connected to a M port and IUT B is not connected.

**Initial Condition:** IUT A port is connected to Tester M port, IUT B port is connected to Tester A port.

**Test Actions:** Disconnect IUT B port.

**Pass_Fail Criteria:**

**a. Single MAC Station**
IUT configuration: see figure 12.
MIB:
SMT.CF_State = c_wrap_a;
- A:CurrentPathType = concatenated;
- A:MyTypeType = a;
- A:NeighborTypeType = m;
- A:RequestedPathsType = Tree;
- B:CurrentPathType = isolated;
- B:MyTypeType = b;
- B:NeighbotTypeType = none;
- B:RequestedPathsType = none.

SRF Report:
- MAC Path Change Event;
- Port Path Change Event.

**b. Dual MAC Station**
IUT configuration: see figure 15.
MIB:
- Same as Single MAC Station.

### 7.4.6 Case-ID: DAS_6

**Test Purpose:** Test configuration when IUT A is connected to a M port and IUT B is connected to a B port.

**Initial Condition:** IUT A port is connected to Tester M port.

**Test Actions:** Connect IUT B to Tester B port.



Copyright International Organization for Standardization
Provided by IHS under license with ISO
No reproduction or networking permitted without license from IHS Not for Resale

**Pass_Fail Criteria:**

**a. Single MAC Station**
IUT configuration: see figure12
MIB:
- SMT.CF_State = c_wrap_b;
- A:CurrentPathType = isolated;
- A:MyTypeType = a;
- A:NeighborTypeType = m;
- A:RequestedPathsType = Tree;
- B:CurrentPathType = concatenated;
- B:MyTypeType = b;
- B:NeighborTypeType = b;
- B:RequestedPathsType = Peer.

SRF Report:
- Peer Wrap Condition;
- Undesirable Connection Event;
- MAC Path Change Event;
- Port Path Change Event.

**b. Dual MA**C **Station**
IUT configuration: see figure 15.
MIB:
- SMT.CF_State = wrap_ab;
- A:CurrentPathType = secondary;
- A:MyTypeType = a;
- A:NeighborTypeType = m;
- A:RequestedPathsType = Tree;
- B:CurrentPathType = primary;
- B:MyTypeType = b;
- B:NeighborTypeType = b;
- B:RequestPathsType = Peer.

SRF Report:
- Peer Wrap Condition;
- MAC Path Change Event;
- Port Path Change Event;
- Undesirable Connection Event.

### 7.4.7 Case-ID: DAS_7

**Test Purpose:** Test configuration when IUT B is connected to a B port and IUT A is not connected.

**Initial Conditions:** IUT A port is connected to Tester M port, IUT B port is connected to Tester B port.

**Test Actions:** Disconnect IUT A port.

**Pass_Fail Criteria:**

**a. Single MAC Station**
IUT configuration: see figure 12.
MIB:
- SMT.CF-State = c_wrap_b;
- A:CurrentPathType = isolated;
- A:MyTypeType = a;
- A:NeighborTypeType = none;
- A:RequestedPathsType = none;
- B:CurrentPathType = concatenated;
- B:MyTypeType = b;
- B:NeighborTypeType = b;
- B:RequestedPathsType = Peer.

SRF Report:
- Peer Wrap Condition.


Copyright International Organization for Standardization
Provided by IHS under license with ISO
No reproduction or networking permitted without license from IHS Not for Resale

**b. Dual MAC Station**
IUT configuration: see figure 15.
MIB:
- SMT.CF-State = c_wrap_b;
- A:CurrentPathType = isolated.
- A:MyTypeType = a;
- A:NeighborTypeType = none;
- A:RequestedPathsType = none;
- B:CurrentPathType = concatenated;
- B:MyTypeType = b;
- B:NeighborTypeType = b;
- B:RequestedPathsType = Peer.

SRF Report:
- Peer Wrap Condition;
- MAC Path Change Event;
- Port Path Change Event.

### 7.4.8 Case-ID: DAS_8

**Test Purpose:** Test configuration when IUT A is connected to an S port and IUT B is connected to a B port.

**Initial Conditions:** IUT B is connected to Tester B port and IUT A is not connected.

**Test Actions:** Connect IUT A to Tester S port.

**Pass_Fail Criteria:**

**a. Single MAC Station**
IUT configuration: see figure 12.
MIB:
- SMT.CF-State = thru;
- A:CurrentPathType = thru;
- A:MyTypeType = a;
- A:NeighborTypeType = s;
- A:RequestedPathsType = Peer;
- B:CurrentPathType = thru;
- B:MyTypeType = b;
- B:NeighborTypeType = b;
- B:RequestedPathsType = Peer.

SRF Report:
- MAC Path Change Event;
- Port Path Change Event;
- Undesirable Connection Event.

**b. Dual MAC Station**
IUT configuration: see figure 15
MIB:
- Same as Single MAC Station.

### 7.4.9 Case-ID: DAS_9

**Test Purpose:** Test configuration when IUT A is connected to an S port and IUT B is not connected.

**Initial Condition:** IUT A port is connected to Tester S port and IUT B port is connected to Tester B port.

**Test Actions:** Disconnect IUT B port.



Copyright International Organization for Standardization
Provided by IHS under license with ISO
No reproduction or networking permitted without license from IHS Not for Resale

**Pass_Fail Criteria:**

**a. Single MAC Station**
IUT configuration: see figure 13.
MIB:
- SMT.CF_State = c_wrap_a;
- A:CurrentPathType = concatenated;
- A:MyTypeType = a;
- A:NeighborTypeType = s;
- A:RequestedPathsType = Peer;
- B:CurrentPathType = isolated;
- B:MyTypeType = b;
- B:NeighborTypeType = none;
- B:RequestedPathsType = none.

SRF Report:
- Peer Wrap Condition;
- MAC Path Change Event;
- Port Path Change Event.

**b. Dual MAC Station**
IUT configuration: see figure 16
MIB:
- Same as Single MAC Station.

### 7.4.10 Case-ID: DAS_10

**Test Purpose:** Test configuration when IUT A is connected to an S port and IUT B is connected to a M port.

**Initial Condition:** IUT A is connected to Tester S port.

**Test Actions:** Connect IUT B to Tester M port

**Pass_Fail Criteria:**

**a. Single MAC Station**
IUT configuration: see figure 13
MIB:
- SMT.CF_State = c_wrap_b;
- A:CurrentPathType = isolated;
- A:MyTypeType = a;
- A:NeighborTypeType = s;
- A:RequestedPathsType = Peer;
- B:CurrentPathType = concatenated;
- B:MyTypeType = b;
- B:NeighborTypeType = m;
- B:RequestedPathsType = Tree.

SRF Report:
- MAC Path Change Event;
- Port Path Change Event.

**b. Dual MAC Station**
IUT configuration: see figure 16
MIB:
- SMT.CF_State = wrap_ab;
- A:CurrentPathType = secondary;
- A:MyTypeType = a;
- A:NeighborTypeType = s;
- A:RequestedPathsType = Peer;
- B:CurrentPathType = primary;
- B:MyTypeType = b;


Copyright International Organization for Standardization
Provided by IHS under license with ISO
No reproduction or networking permitted without license from IHS Not for Resale

- B:NeighborTypeType = m;
- B:RequestedPathsType = Tree.

SRF Report:

- Peer Wrap Condition;
- MAC Path Change Event;
- Port Path Change Event;
- Undesirable Connection Event.

### 7.4.11 Case-ID: DAS_11

**Test Purpose:** Test configuration when IUT B is connected to an M port and IUT A is not connected.

**Initial Condition:** IUT A port is connected to Tester S port and IUT B port is connected to Tester M port.

**Test Actions:** Disconnect IUT A port.

**Pass_Fail Criteria:**

**a. Single MAC Station**
IUT configuration: see figure 13.
MIB:

- SMT.CF_State = c_wrap_b;
- A:CurrentPathType = isolated;
- A:MyTypeType = a;
- A:NeighborTypeType = none;
- A:RequestedTypeType = none;
- B:CurrentPathType = concatenated;
- B:MyTypeType = b;
- B:NeighborTypeType = m;
- B:RequestedPathsType = Tree.

SRF Report:

- None.

**b. Dual MAC Station**
IUT configuration: see figure 16
MIB:

- SMT.CF_State = c_wrap_b;
- A:CurrentPathType = isolated;
- A:MyTypeType = a;
- A:NeighborTypeType = none;
- A:RequestedTypeType = none;
- B:CurrentPathType = concatenated;
- B:MyTypeType = b;
- B:NeighborTypeType = m;
- B:RequestedPathsType = Tree.

SRF Report:

- Port Path Change Event;
- MAC Path Change Event.

### 7.4.12 Case-ID: DAS_12

**Test Purpose:** Test **c**onfiguration when IUT A is connected to an A port and IUT B is connected to a M port.

**Initial Condition:** IUT B is connected to Tester M port.

**Test Actions:** Connect IUT A to Tester A port.



Copyright International Organization for Standardization
Provided by IHS under license with ISO
No reproduction or networking permitted without license from IHS
Not for Resale

**Pass_Fail Criteria:**

**a. Single MAC Station**
IUT configuration: see figure 13.
MIB:
- SMT.CF_State = c_wrap_b.
- A:CurrentPathType = isolated;
- A:MyTypeType = a;
- A:NeighborTypeType = a;
- A:RequestedPathsType = Peer;
- B:CurrentPathType = concatenated;
- B:MyTypeType = b;
- B:NeighborTypeType = m;
- B:RequestedPathsType = Tree.

SRF Report:
- None.

**b. Dual MAC Station**
IUT configuration: see figure 16
MIB:
- A:CurrentPathType = secondary;
- A:MyTypeType = a;
- A:NeighborTypeType = a;
- A:RequestedPathsType = Peer;
- B:CurrentPathType = primary;
- B:MyTypeType = b;
- B:NeighborTypeType = m;
- B:RequestedPathsType = Tree.

SRF Report:
- Peer Wrap Condition;
- MAC Path Change Event;
- Port Path Change Event;
- Undesirable Connection Event.

### 7.4.13 Case-ID: DAS_13

**Test Purpose:** Test configuration when IUT A is connected to an A port and IUT B is not connected.

**Initial Condition:** IUT A is connected to Tester A port and IUT B is connected to Tester M port.

**Test Actions:** Disconnect IUT B port.

**Pass_Fail Criteria:**

**a. Single MAC Station**
IUT configuration: see figure 13
MIB:
- SMT.CF_State = c_wrap_a;
- A:CurrentPathType = concatenated;
- A:MyTypeType = a;
- A:NeighborTypeType = a;
- A:RequestedPathsType = Peer;
- B:CurrentPathType = isolated;
- B:MyTypeType = b;
- B:NeighborTypeType = none;
- B:RequestedPathType = none.

SRF Report:
- Peer Wrap Condition;
- MAC Path Change Event;
- Port Path Change Event;
- Undesirable Connection Event.


Copyright International Organization for Standardization
Provided by IHS under license with ISO
No reproduction or networking permitted without license from IHS Not for Resale

**b. Dual MAC Station**
IUT Configuration: see figure 16.
MIB:
- Same as Single MAC Station.

### 7.4.14 Case-ID: DAS_14

**Test Purpose:** Test configuration when IUT A is connected to Tester A port and B is connected to Tester S port.

**Initial Condition:** IUT A port is connected to Tester A port and IUT B port is not connected.

**Test Actions:** Connect IUT B to Tester S port.

**a. Single MAC Station**
IUT configuration: see figure 13.
MIB:
- SMT.CF_State = thru;
- A:CurrentPathType = thru;
- A:MyTypeType = a;
- A:NeighborTypeType = a;
- A:RequestedPathsType = Peer;
- B:CurrentPathType = thru;
- B:MyTypeType = b;
- B:NeighborTypeType = s;
- B:RequestedPathsType = Peer.

SRF Report:
- MAC Path Change Event;
- Port Path Change Event;
- Undesirable Connection Event.

**b. Dual MAC Station**
IUT configuration: see figure 16.
MIB:
- Same as Single MAC Station.

### 7.4.15 Case-ID: DAS_15

**Test Purpose:** Test configuration when IUT B is connected to an S port and IUT A is not connected.

**Initial Condition:** IUT A port is connected to Tester A port and IUT B port is connected to Tester S port.

**Test Actions:** Disconnect IUT A port.

**Pass_Fail Criteria:**

**a. Single MAC Station**
IUT configuration: see figure 13
MIB:
- SMT.CF_State = c_wrap_b;
- A:CurrentPathType = none;
- A:MyTypeType = a;
- A:NeighborTypeType = none;
- A:RequestedPathsType = none;
- B:CurrentPathType = concatenated;
- B:MyTypeType = b;
- B:NeighborTypeType = s;
- B:RequestedPathsType = Peer.

SRF Report:
- Peer Wrap Condition;
- MAC Path Change Event;
- Port Path Change Event.



--`,,```,,,,````-`-`,,`,,`,`,,`---
Copyright International Organization for Standardization
Provided by IHS under license with ISO
No reproduction or networking permitted without license from IHS
Not for Resale

**b. Dual MAC Station**
IUT configuration: see figure 16
MIB:
- SMT.CF_State = c_wrap_b;
- A:CurrentPathType = none;
- A:MyTypeType = a;
- A:NeighborTypeType = none;
- A:RequestedPathsType = none;
- B:CurrentPathType = concatenated;
- B:MyTypeType = b;
- B:NeighborTypeType = s;
- B:RequestedPathsType = Peer.

SRF Report:
- Peer Wrap Condition;
- MAC Path Change Event;
- Port Path Change Event.

### 7.4.16 Case-ID: DAS_16

**Test Purpose:** Test configuration when IUT A is connected to a B port and IUT B is connected to an S port.

**Initial Condition:** IUT B is connected to Tester S port and IUT A is not connected.

**Test Actions:** Connect IUT A to Tester B port.

**Pass_Fail Criteria:**

**a. Single MAC Station**
IUT configuration: see figure 13.
MIB:
- SMT.CF_State = thru;
- A:CurrentPathType = thru;
- A:MyTypeType = a;
- A:NeighborTypeType = b;
- A:RequestedPathsType = Peer;
- B:CurrentPathType = thru;
- B:MyTypeType = b;
- B:NeighborTypeType = s;
- B:RequestedPathsType = Peer.

SRF Report:
- MAC Path Change Event;
- Port Path Change Event.

**b. Dual MAC Station**
IUT configuration: see figure 16
MIB:
- Same as Single MAC Station.

### 7.4.17 Case-ID: DAS_17

**Test Purpose:** Test configuration when IUT A is connected to a B port and IUT B is connected to a B port.

**Initial Condition:** IUT A port is connected to Tester B port and IUT B port is connected to Tester S port.

**Test Actions:** Disconnect IUT B port and Connect IUT B port to Tester B port.


Copyright International Organization for Standardization
Provided by IHS under license with ISO
No reproduction or networking permitted without license from IHS Not for Resale

**Pass_Fail Criteria:**
**Note:** Because two configuration changes occur in cases 18 through 25, events are not included in the Pass_Fail Criteria.

**a. Single MAC Station**
IUT configuration: see figure 14
MIB:
- SMT.CF_State = thru;
- A:CurrentPathType = thru;
- A:MyTypeType = a;
- A:NeighborTypeType = b;
- A:RequestedPathsType = Peer;
- B:CurrentPathType = thru;
- B:MyTypeType = b;
- B:NeighborTypeType = b;
- B:RequestedPathsType = Peer.

**b. Dual MAC Station**
IUT Configuration: see figure 17
MIB:
- Same as Single MAC Station.

### 7.4.18 Case-ID: DAS_18

**Test Purpose:** Test configuration when IUT A is connected to a B port and IUT B is connected to a M port.

**Initial Condition:** IUT A is connected to Tester B port and IUT B is connected to Tester B port.

**Test Actions:** Disconnect IUT B port and Connect IUT B port to Tester M port.

**Pass_Fail Criteria:**

**a. Single MAC Station**
IUT configuration: see figure 14.
MIB:
- SMT.CF_State = c_wrap_b;
- A:CurrentPathType = isolated;
- A:MyTypeType = a;
- A:NeighborTypeType = b;
- A:RequestedPathsType = Peer;
- B:CurrentPathType = concatenated;
- B:MyTypeType = b;
- B:NeighborTypeType = m;
- B:RequestedPathsType = Tree.

**b. Dual MAC Station**
IUT configuration: see figure 17.
MIB:
- SMT.CF_State = wrap_ab;
- A:CurrentPathType = secondary;
- A:MyTypeType = a;
- A:NeighborTypeType = b;
- A:RequestedPathsType = Peer;
- B:CurrentPathType = primary;
- B:MyTypeType = b;
- B:NeighborTypeType = m;
- B:RequestedPathsType = Tree.



Copyright International Organization for Standardization
Provided by IHS under license with ISO
No reproduction or networking permitted without license from IHS
Not for Resale

### 7.4.19 Case-ID: DAS_19

**Test Purpose:** Test configuration when IUT A is connected to a M port and IUT B is connected to a M port.

**Initial Condition:** IUT A is connected to Tester B port and IUT B is connected to Tester M port.

**Test Actions:** Disconnect IUT A port and Connect IUT A port to Tester M port.

**Pass_Fail Criteria:**

**a. Single MAC Station**
IUT configuration: see figure 14
MIB:
- SMT.CF_State = c_wrap_b;
- A:CurrentPathType = isolated;
- A:MyTypeType = a;
- A:NeighborTypeType = m;
- A:RequestedPathsType = Tree;
- B:CurrentPathType = concatenated;
- B:MyTypeType = b;
- B:NeighborTypeType = m;
- B:RequestedPathsType = Tree.

**b. Dual MAC Station**
IUT configuration: see figure 17.
MIB:
- SMT.CF_State = wrap_ab;
- A:CurrentPathType = secondary;
- A:MyTypeType = a;
- A:NeighborTypeType = m;
- A:RequestedPathsType = Tree;
- B:CurrentPathType = primary;
- B:MyTypeType = b;
- B:NeighborTypeType = m;
- B:RequestedPathsType = Tree.

### 7.4.20 Case-ID: DAS_20

**Test Purpose:** Test configuration when IUT A is connected to a M port and IUT B is connected to an S port.

**Initial Condition:** IUT A is connected to Tester M port and IUT B is connected to Tester M port.

**Test Action:** Disconnect IUT B port and Connect IUT B to Tester S port.

**Pass_Fail Criteria:**

**a. Single MAC Station**
IUT configuration: see figure 14.
MIB:
SMT.CF_State = c_wrap_b;
- A:CurrentPathType = isolated;
- A:MyTypeType = a;
- A:NeighborTypeType = m;
- A:RequestedPathsType = tree;
- B:CurrentPathType = concatenated;
- B:MyTypeType = b;
- B:NeighborTypeType = s;
- B:RequestedPathsType = Peer.


Copyright International Organization for Standardization
Provided by IHS under license with ISO
No reproduction or networking permitted without license from IHS Not for Resale

**b. Dual MAC Station**
IUT configuration: see figure 17.
MIB:
- SMT.CF_State = wrap_ab;
- A:CurrentPathType = secondary;
- A:MyTypeType = a;
- A:NeighborTypeType = m;
- A:RequestedPathsType = Tree;
- B:CurrentPathType = primary;
- B:MyTypeType = b;
- B:NeighborTypeType = s;
- B:RequestedPathsType = Peer.

### 7.4.21 Case-ID: DAS_21

**Test Purpose:** Test configuration when IUT A is connected to an S port and IUT B is connected to an S port.

**Initial Condition:** IUT A is connected to Tester M port and IUT B is connected to Tester S port.

**Test Actions:** Disconnect IUT A port and Connect IUT A port to Tester S port.

**Pass_Fail Criteria:**

**a. Single MAC Station**
IUT configuration: see figure 14.
MIB:
- SMT.CF_State = thru;
- A:CurrentPathType = thru;
- A:MyTypeType = a;
- A:NeighborTypeType = s;
- A:RequestedPathsType = Peer;
- B:CurrentPathType = thru;
- B:MyTypeType = b;
- B:NeighborTypeType = s;
- B:RequestedPathsType = Peer.

**b. Dual MAC Station**
IUT configuration: see figure 17.
MIB:
- Same as Single MAC Station.

### 7.4.22 Case-ID: DAS_22

**Test Purpose:** Test configuration when IUT A is connected to a S port and IUT B is connected to an A port.

**Initial Condition:** IUT A is connected to Tester S port and IUT B is connected to Tester S port.

**Test Actions:** Disconnect IUT B port and Connect IUT B port to Tester A port.

**Pass_Fail Criteria:**

**a. Single MAC Station**
IUT configuration: see figure 14.
MIB:
- SMT.CF_State = thru;
- A:CurrentPathType = thru;
- A:MyTypeType = a;
- A:NeighborTypeType = s;
- A:RequestedPathsType = Peer;
- B:CurrentPathType = thru;
- B:MyTypeType = b;



Copyright International Organization for Standardization
Provided by IHS under license with ISO
No reproduction or networking permitted without license from IHS Not for Resale

- B:NeighborTypeType = a;
- B:RequestedPathsType = Peer.

**b. Dual MAC Station**
IUT configuration: see figure 17
MIB:
- Same as Single MAC Station.

### 7.4.23 Case-ID: DAS_23

**Test Purpose:** Test configuration when IUT A is connected to an S port and IUT B is connected to an A port.

**Initial Condition:** IUT A is connected to Tester S port and IUT B is connected to Tester A port.

**Test Actions:** Disconnect IUT A port and Connect IUT A port to Tester A port.

**Pass_Fail Criteria:**

**a. Single MAC Station**
IUT configuration: see figure 14
MIB:
- SMT.CF_State = thru;
- A:CurrentPathType = thru;
- A:MyTypeType = a;
- A:NeighborTypeType = a;
- A:RequestedPathsType = Peer.
- B:CurrentPathType = thru;
- B:MyTypeType = b;
- B:NeighborTypeType = a;
- B:RequestedPathType = Peer.

**b. Dual MAC Station**
IUT configuration: see figure 17.
MIB:
- Same as Single MAC Station.

### 7.4.24 Case-ID: DAS_24

**Test Purpose:** Test configuration when IUT A is connected to an A port and IUT B is connected to a B port.

**Initial Condition:** IUT A is connected to Tester A port and IUT B is connected to Tester A port.

**Test Actions:** Disconnect IUT B port and Connect IUT B port to Tester B port.

**Pass_Fail Criteria:**

**a. Single MAC Station**
IUT configuration: see figure 14
MIB:
SMT.CF_State = thru;
- A:CurrentPathType = thru;
- A:MyTypeType = a;
- A:NeighborTypeType = a;
- A:RequestedPathType = Peer;
- B:CurrentPathType = thru;
- B:MyTypeType = b;
- B:NeighborTypeType = b;
- B:RequestedPathType = Peer.

**b. Dual MAC Station**
IUT configuration: see figure 17
MIB:
- Same as Single MAC Station.


Copyright International Organization for Standardization
Provided by IHS under license with ISO
No reproduction or networking permitted without license from IHS Not for Resale

## 7.5 Test Description Dual Attachment Concentrator

This test group verifies the conformance of Configuration Management (CFM) for Dual Attachment Concentrators (DAC). A DAC is also a DAS and a DAC shall first be tested as a DAS using the test procedure specified in 7.4 above with none of its M ports connected. Table 2 summarized this test group.

This test group consists of 10 additional test cases that test concentrator functionality, that is Master ports. The assumptions of the Pass_Fail Criteria specified in this test group are that:

- the implementation's M port PermittedPath bits follow the default settings given in ISO/IEC 9314-6:1998;
- the implementation performs path selection based solely on the rules specified in ISO/IEC 9314-6:1998 for the M port alternate PermittedPath bits;
- the implementation does not further restrict the choice among the various alternates based on implementator defined conditions.

The detailed Pass_Fail Criteria specified below in this subclause are applicable to such implementations only. Note that item 6 of the Selection criteria in ISO/IEC 9314-6:1998 does specifically permit further restriction of the choice among various alternatives based on implementor defined conditions. This test group may also be used to test such concentrators. However, for conformance tests of such implementations the Pass_Fail Criteria are limited to the following:

- The MIB attributes listed below are consistent with the configuration of the station as determined by the ring maps constructed by the tester;
- Any active M port is inserted in either the primary or secondary path;
- No wrap conditions exist where a MAC is not placed on the wrapped path. That is the IUT withholds connections with its A or B port whenever the result of the connection would be a wrap with no MAC on the path.

Note that both single and dual MAC DACs are verified with the same test group. In each case the test actions are identical for single and dual MAC DACs, however the pass_fail criteria are different. Therefore each test case includes separate pass-fail criteria for single and dual MAC DAC.

The functionality of 2 concentrator M ports is tested in this test group. These are labeled M1 and M2 and can be any two arbitrarily selected M ports.

The correct value of the following MIB parameters shall be verified using PMF Get Request Frames for each test case configuration:

- CF-State;
- A:CurrentPathType;
- A:MayTypeType;
- A:NeighborTypeType;
- A:RequestedPathsType;
- B:CurrentPathType;
- B:MyTypeType;
- B:NeighborTypeType
- B:RequestedPathsType
- M1: CurrentPathType;
- M1:MyTypeType;
- M1:NeighborTypeType;
- M1:RequestedPathsType;
- M2:CurrentPathType;
- M2:MyTypeType;
- M2:NeighborTypeType;
- M2:RequestedPathsType.



Copyright International Organization for Standardization
Provided by IHS under license with ISO
No reproduction or networking permitted without license from IHS
Not for Resale

The SRF verification portion of the test requires that the test cases be executed in the order specified. The generation of appropriate SRF frames for each configuration test step shall be verified for the following events and conditions:

- Peer Wrap Condition;
- MAC Path Change Event;
- Port Path Change Event;
- Undesirable Connection Event.

### 7.5.1 Case-ID: DAC_1

**Test Purpose**: Test configuration when IUT M1 port is connected to an S port.

**Initial Condition:** IUT A, B, M1 and M2 ports not connected. The IUT is isolated

**Test Actions:** Connect IUT M1 port to Tester S port.

**Pass_Fail Criteria:**

**a. Single MAC Concentrator**
IUT configuation: see figure 18.
MIB:
- SMT.CF_State = isolated;
- A:CurrentPathType = isolated;
- A:MyTypeType = a;
- A:NeighborTypeType = none;
- A;RequestedPathsType = none;
- B:CurrentPathsType = isolated;
- B:MyTypeType = b;
- B:NeighborTypeType = none;
- B:RequestedPathType = none;
- M1:CurrentPathType = primary;
- M1:MyTypeType = m;
- M1:NeighborTypeType = s;
- M1:RequestedPathsType = tree
- M2:CurrentPathType = isolated;
- M2:MyTypeType = m;
- M2:RequestedPathType = none.

SRF Report:
- Port Path Change Event;
- MAC Path Change Event.

**b. Dual MAC Concentrator**
IUT configuration: see figure 20 The MIB and SRF Reports are the same as for the Single MAC Concentrator.

### 7.5.2 Case-ID: DAC_2

**Test Purpose**: Test configuration when IUT M1, M2 ports are connected to S ports.

**Initial Condition**: IUT M1 port is connected to Tester S port.

**Test Actions**: Connect IUT M2 port to Tester S port.

**Pass_Fail Criteria:**

**a. Single MAC Concentrator**
IUT configuration: see figure 18.
MIB:
- SMT.CF_State = isolated;
- A:CurrentPathType = isolated;
- A:MyTypeType = a;
- A:NeighborTypeType = none;
- A:RequestedPathsType = none;


Copyright International Organization for Standardization
Provided by IHS under license with ISO
No reproduction or networking permitted without license from IHS Not for Resale

- B:CurrentPathType = isolated;
- B:MyTypeType = b;
- B:NeighborTypeType = none;
- B:RequestedPathsType = none;
- M1:CurrentPathType = primary;
- M1:MyTypeType = m;
- M1:NeighborTypeType = s;
- M1:RequestedPathsType = tree;
- M2:CurrentPathType = primary;
- M2:MyTypeType = m;
- M2:NeighborTypeType = s;
- M2:RequestedPathsType = tree.

SRF Report:

- Port Path Change Event;
- MAC Path Change Event.

**b**. **Dual MAC Concentrator**
IUT configuration: see figure 20. The MIB and SRF Reports are the same as for the Single MAC Concentrator.

### 7.5.3 Case-ID: DAC_3

**Test Purpose**: Test configuration when IUT A port is connected to a B port, M1, M2 ports are connected to S ports.

**Initial Condition**: IUT M1, M2 ports are connected to Tester S ports.

**Test Actions**: Connect IUT A port to Tester B port.

**Pass_Fail Criteria:**

**a**. **Single MAC Concentrator**
IUT configuration: see figure 18. The IUT MAC is placed after the M ports on the A port exit.
MIB:

- SMT.CF_State = c_wrap_a;
- A:CurrentPathType = concatenated;
- A:MyTypeType = a;
- A:NeighborTypeType = b;
- A:RequestedPathsType = peer;
- B:CurrentPathType = isolated;
- B:MyTypeType = b;
- B:NeighborTypeType = none;
- B:RequestedPathsType = none;
- M1:CurrentPathType = primary;
- M1:MyTypeType = m;
- M1:NeighborTypeType = s;
- M1:RequestedPathsType = tree;
- M2:CurrentPathType = primary;
- M2:MyTypeType = m;
- M2:NeighborTypeType = s;
- M2:RequestedPathsType = tree.

SRF Report:

- Port Path Change Event;
- MAC Path Change Event;
- Peer Wrap Condition.

**b. Dual MAC Concentrator**
IUT configuration: see figure 20. The MIB and SRF Reports are the same as for the Single MAC Concentrator.



Copyright International Organization for Standardization
Provided by IHS under license with ISO
No reproduction or networking permitted without license from IHS Not for Resale

### 7.5.4 Case-ID: DAC_4

**Test Purpose**: Test configuration when IUT A port is connected to a B port, B port is connected to an A port and M1, M2 ports are connected to S ports.

**Initial Condition:** IUT A port is connected to Tester B port, M1, M2 ports are connected to Tester S ports.

**Test Actions:** Connect IUT B port to Tester A port.

**Pass_Fail Criteria:**

**a. Single MAC Concentrator**
IUT configuration: see figure 18. The IUT MAC is placed after the M ports on the B port exit.
MIB:
- SMT.CF_State = thru;
- A:CurrentPathType = thru;
- A:MyTypeType = a;
- A:NeighborTypeType = b;
- A:RequestedPathsType = peer;
- B:CurrentPathType = thru;
- B:MyTypeType = b;
- B:NeighborTypeType = a;
- B:RequestedPathsType = peer;
- M1:CurrentPathType = primary;
- M1:MyTypeType = m;
- M1:NeighborTypeType = s;
- M1:RequestedPathsType = tree;
- M2:CurrentPathType = primary;
- M2:MyTypeType = m;
- M2:NeighborTypeType = s;
- M2:RequestedPathsType = tree.

SRF Report:
- Port Path Change Event;
- MAC Path Change Event.

**b. Dual MAC Concentrator**
IUT configuration: see figure 20. The MIB and SRF Reports are the same as for the Single MAC Concentrator.

### 7.5.5 Case-ID: DAC_5

**Test Purpose**: Test configuration when IUT B port is connected to an A port and M1, M2 ports are connected to S ports.

**Initial Condition:** IUT A port is connected to Tester B port, B port is connected to Tester A port and M1, M2 ports are connected to Tester S ports.

**Test Actions:** Disconnect IUT A port.

**Pass_Fail Criteria:**

**a. Single MAC Concentrator**
IUT configuration: see figure 18.
MIB:
SMT.CF_State = c_wrap_b;
- A:CurrentPathType = isolated;
- A:MyTypeType = a;
- A:NeighborTypeType = none;
- A:RequestedPathsType = none;
- B:CurrentPathType = concatenated;
- B:MyTypeType = b;
- B:NeighborTypeType = a;


Copyright International Organization for Standardization
Provided by IHS under license with ISO
No reproduction or networking permitted without license from IHS Not for Resale

- B:RequestedPathsType = peer;
- M1:CurrentPathType = primary;
- M1:MyTypeType = m;
- M1:NeighborTypeType = s;
- M1:RequestedPathsType = tree;
- M2:CurrentPathType = primary;
- M2:MyTypeType = m;
- M2:NeighborTypeType = s;
- M2:RequestedPathsType = tree.

SRF Report:

- Port Path Change Event;
- MAC Path Change Event;
- Peer Wrap Condition.

**b. Dual MAC Concentrator**
IUT configuration: see figure 20. The MIB and SRF Reports are the same as for the Single MAC Concentrator.

### 7.5.6 Case-ID: DAC_6

**Test Purpose:** Test configuration when IUT B port is connected to an A port, IUT A port is connected to an M port and M1, M2 ports are connected to S ports.

**Initial Condition:** IUT B port is connected to Tester A port and M1, M2 ports are connected to Tester S ports.

**Test Actions:** Connect IUT A port to Tester M port.

**Pass_Fail Criteria:**

**a. Single MAC Concentrator**
IUT configuration: see figure 18.
MIB:

- SMT.CF_State = c_wrap_b;
- A:CurrentPathType = isolated;
- A:MyTypeType = a;
- A:NeighborTypeType = m;
- A:RequestedPathsType = tree;
- B:CurrentPathType = concatenated;
- B:MyTypeType = b;
- B:NeighborTypeType = a;
- B:RequestedPathsType = peer;
- M1:CurrentPathType = primary;
- M1:MyTypeType = m;
- M1:NeighborTypeType = s;
- M1:RequestedPathsType = tree;
- M2:CurrentPathType = primary;
- M2:MyTypeType = m;
- M2:NeighborTypeType = s;
- M2:RequestedPathsType = tree.

SRF Report:

- Peer Wrap Condition.

**b. Dual MAC Concentrator**
IUT configuration: see figure 20.
MIB:

- SMT.CF_State = wrap_ab;
- A:CurrentPathType = secondary;
- A:MyTypeType = a;
- A:NeighborTypeType = m;
- A:RequestedPathsType = tree;
- B:CurrentPathType = primary;



Copyright International Organization for Standardization
Provided by IHS under license with ISO
No reproduction or networking permitted without license from IHS Not for Resale

- B:MyTypeType = b;
- B:NeighborTypeType = a;
- B:RequestedPathsType = peer;
- M1:CurrentPathType = primary;
- M1:MyTypeType = m;
- M1:NeighborTypeType = s;
- M1:RequestedPathsType = tree;
- M2:CurrentPathType = primary;
- M2:MyTypeType = m;
- M2:NeighborTypeType = s;
- M2:RequestedPathsType = tree.

SRF Report:

- Peer Wrap Condition;
- Port Path Change Event;
- MAC Path Change Event.

### 7.5.7 Case-ID: DAC_7

**Test Purpose**: Test configuration when IUT A port is connected to an M port and M1, M2 ports are connected to S ports.

**Initial Condition:** IUT B port is connected to Tester A port, A port is connected to Tester M port and M1, M2 ports are connected to Tester S ports.

**Test Actions:** Disconnect IUT B port.

**Pass_Fail Criteria:**

**a. Single MAC Concentrator**
IUT configuration: see figure 19. The IUT MAC is after the M ports next to the A port exit.
MIB:

- SMT.CF_State = c_wrap_a;
- A:CurrentPathType = concatenated;
- A:MyTypeType = a;
- A:NeighborTypeType = m;
- A:RequestedPathsType = tree;
- B:CurrentPathType = isolated;
- B:MyTypeType = b;
- B:NeighborTypeType = none;
- B:RequestedPathsType = none;
- M1:CurrentPathType = primary;
- M1:MyTypeType = m;
- M1:NeighborTypeType = s;
- M1:RequestedPathsType = tree;
- M2:CurrentPathType = primary;
- M2:MyTypeType = m;
- M2:NeighborTypeType = s;
- M2:RequestedPathsType = tree.

SRF Report:

- Port Path Change Event;
- MAC Path Change Event.

**b. Dual MAC Concentrator**
IUT configuration: see figure 21. The MIB and SRF Reports are the same as for the Single MAC Concentrator.

### 7.5.8 Case-ID: DAC_8

**Test Purpose**: Test configuration when IUT A port, B port are connected to M ports and M1, M2 ports are connected to S ports.

**Initial Condition:** IUT A port is connected to Tester M port and M1, M2 ports are connected to Tester S ports.


Copyright International Organization for Standardization
Provided by IHS under license with ISO
No reproduction or networking permitted without license from IHS Not for Resale

**Test Actions:** Connect IUT B port to Tester Mport.

**Pass_Fail Criteria:**

**a. Single MAC Concentrator**
IUT configuration: see figure 19.
MIB:
- SMT.CF_State = c_wrap_b;
- A:CurrentPathType = isolated;
- A:MyTypeType = a;
- A:NeighborTypeType = m;
- A:RequestedPathsType = tree;
- B:CurrentPathType = concatenated;
- B:MyTypeType = b;
- B:NeighborTypeType = m;
- B:RequestedPathsType = tree;
- M1:CurrentPathType = primary;
- M1:MyTypeType = m;
- M1:NeighborTypeType = s;
- M1:RequestedPathsType = tree;
- M2:CurrentPathType = primary;
- M2:MyTypeType = m;
- M2:NeighborTypeType = s;
- M2:RequestedPathsType = tree.

SRF Report:
- Port Path Change Event;
- MAC Path Change Event.

**b. Dual MAC Concentrator**
IUT configuration: see figure 21.
MIB:
- SMT.CF_State = wrap_ab;
- A:CurrentPathType = secondary;
- A:MyTypeType = a;
- A:NeighborTypeType = m;
- A:RequestedPathsType = tree;
- B:CurrentPathType = primary;
- B:MyTypeType = b;
- B:NeighborTypeType = m;
- B:RequestedPathsType = tree;
- M1:CurrentPathType = primary;
- M1:MyTypeType = m;
- M1:NeighborTypeType = s;
- M1:RequestedPathsType = tree;
- M2:CurrentPathType = primary;
- M2:MyTypeType = m;
- M2:NeighborTypeType = s;
- M2:RequestedPathsType = tree.

SRF Report:
- Port Path Change Event;
- MAC Path Change Event.

### 7.5.9 Case-ID: DAC_9

**Test Purpose**: Test configuration when IUT A port, B port are connected to M ports and M2 port is connected to an S port.

**Initial Condition:** IUT A, B ports are connected to Tester M ports and M1, M2 ports are connected to Tester S ports.

**Test Actions:** Disconnect IUT M1 port.



Copyright International Organization for Standardization
Provided by IHS under license with ISO
No reproduction or networking permitted without license from IHS Not for Resale

**Pass_Fail Criteria:**

**a. Single MAC Concentrator**
IUT configuration: see figure 19.
MIB:
- SMT.CF_State = c_wrap_b;
- A:CurrentPathType = isolated;
- A:MyTypeType = a;
- A:NeighborTypeType = m;
- A:RequestedPathsType = tree;
- B:CurrentPathType = concatenated;
- B:MyTypeType = b;
- B:NeighborTypeType = m;
- B:RequestedPathsType = tree;
- M1:CurrentPathType = isolated;
- M1:MyTypeType = m;
- M1:NeighborTypeType = none;
- M1:RequestedPathsType = none;
- M2:CurrentPathType = primary;
- M2:MyTypeType = m;
- M2:NeighborTypeType = s;
- M2:RequestedPathsType = tree.

SRF Report:
- Port Path Change Event;
- MAC Path Change Event.

**b. Dual MAC Concentrator**
IUT configuration: see figure 21.
MIB:
- SMT.CF_State = wrap_ab;
- A:CurrentPathType = secondary;
- A:MyTypeType = a;
- A:NeighborTypeType = m;
- A:RequestedPathsType = tree;
- B:CurrentPathType = primary;
- B:MyTypeType = b;
- B:NeighborTypeType = m;
- B:RequestedPathsType = tree;
- M1:CurrentPathType = isolated;
- M1:MyTypeType = m;
- M1:NeighborTypeType = none;
- M1:RequestedPathsType = none;
- M2:CurrentPathType = primary;
- M2:MyTypeType = m;
- M2:NeighborTypeType = s;
- M2:RequestedPathsType = tree.

SRF Report:
- Port Path Change Event;
- MAC Path Change Event.

### 7.5.10 Case-ID: DAC_10

**Test Purpose**: Test configuration when IUT A port, B port are connected to M ports.

**Initial Condition:** IUT A, B ports are connected to Tester M ports and M2 port is connected to Tester S port.

**Test Actions:** Disconnect IUT M2 port.

--`,,```,,,,````-`-`,,`,,`,`,,`---


Copyright International Organization for Standardization
Provided by IHS under license with ISO
No reproduction or networking permitted without license from IHS Not for Resale

**Pass_Fail Criteria:**

**a. Single MAC Concentrator**
IUT configuration: see figure 19.
MIB:
- SMT.CF_State = c_wrap_b;
- A:CurrentPathType = isolated;
- A:MyTypeType = a;
- A:NeighborTypeType = m;
- A:RequestedPathsType = tree;
- B:CurrentPathType = concatenated;
- B:MyTypeType = b;
- B:NeighborTypeType = m;
- B:RequestedPathsType = tree;
- M1:CurrentPathType = isolated;
- M1:MyTypeType = m;
- M1:NeighborTypeType = none;
- M1:RequestedPathsType = none;
- M2:CurrentPathType = isolated;
- M2:MyTypeType = m;
- M2:NeighborTypeType = none;
- M2:RequestedPathsType = none.

SRF Report:
- Port Path Change Event;
- MAC Path Change Event.

**b. Dual MAC Concentrator**
IUT configuration: see figure 21.
MIB:
- SMT.CF_State = wrap_ab;
- A:CurrentPathType = secondary;
- A:MyTypeType = a;
- A:NeighborTypeType = m;
- A:RequestedPathsType = tree;
- B:CurrentPathType = primary;
- B:MyTypeType = b;
- B:NeighborTypeType = m;
- B:RequestedPathsType = tree;
- M1:CurrentPathType = isolated;
- M1:MyTypeType = m;
- M1:NeighborTypeType = none;
- M1:RequestedPathsType = none;
- M2:CurrentPathType = isolated;
- M2:MyTypeType = m;
- M2:NeighborTypeType = none;
- M2:RequestedPathsType = none.

SRF Report:
- Port Path Change Event;
- MAC Path Change Event.

## 7.6 Test Description Single Attachment Station

This test group verifies the conformance of CFM for Single Attachment Stations (SAS). It consists of four test cases. The test cases may be executed in any order. All test cases begin with the station isolated. Table 3 summarized this text group.



--`,,```,,,,````-`-`,,`,,`,`,,`---
Copyright International Organization for Standardization
Provided by IHS under license with ISO
No reproduction or networking permitted without license from IHS
Not for Resale

The correct value of the following MIB parameters shall be verified using PMF Get Request Frames for each test case configuration:

- CF-State;
- S:CurrentPathType;
- S:MyTypeType;
- S:NeighborTypeType;
- S:RequestedPathsType;

The generation of appropriate SRF frames for each configuration test step shall be verified for the following events and conditions:

- MAC Path Change Event;
- Port Path Change Event;
- Peer Wrap Condition.

### 7.6.1 Case-ID: SAS_1

**Test Purpose**: Test configuration when IUT S port is connected to an M port.

**Initial Condition:** IUT S, port is not connected. The IUT is isolated.

**Test Actions:** Connect IUT S port to Tester M port.

**Pass_Fail Criteria:**

The connection is accepted by the IUT and the IUT's MAC is inserted on the ring. See figure 22.
MIB:
- SMT.CF_State = wrap_s or c_wrap_s;
- S:CurrentPathType = primary or concatenated;
- S:MyTypeType = s;
- S:NeighborTypeType = m;
- S:RequestedPathsType = tree.

SRF Report:
- Port Path Change Event;
- MAC Path Change Event.

### 7.6.2 Case-ID: SAS_2

**Test Purpose:** Test configuration when IUT S port is connected to an A port.

**Initial Condition:** IUT S, port is not connected. The IUT is isolated.

**Test Actions:** Connect IUT S port to Tester A port.

**Pass_Fail Criteria:**

The connection is accepted by the IUT and the IUT's MAC is inserted on the ring. See figure 22.
MIB:
- SMT.CF_State = wrap_s or c_wrap_s;
- S:CurrentPathType = primary or concatenated;
- S:MyTypeType = s;
- S:NeighborTypeType = a;
- S:RequestedPathsType = peer.

SRF Report:
- Port Path Change Event;
- MAC Path Change Event;
- Peer Wrap Condition.


--`,,```,,,,````-`-`,,`,,`,`,,`---
Copyright International Organization for Standardization
Provided by IHS under license with ISO
No reproduction or networking permitted without license from IHS
Not for Resale

### 7.6.3 Case-ID: SAS_3

**Test Purpose:** Test configuration when IUT S port is connected to an A port.

**Initial Condition:** IUT S, port is not connected. The IUT is isolated.

**Test Actions:** Connect IUT S port to Tester A port.

**Pass_Fail Criteria:**

The connection is accepted by the IUT and the IUT's MAC is inserted on the ring. See figure 22.
MIB:
- SMT.CF_State = wrap_s or c_wrap_s;
- S:CurrentPathType = primary or concatenated;
- S:MyTypeType = s;
- S:NeighborTypeType = b;
- S:RequestedPathsType = peer.

SRF Report:
- Port Path Change Event;
- MAC Path Change Event;
- Peer Wrap Condition.

### 7.6.4 Case-ID: SAS_4

**Test Purpose:** Test configuration when IUT S port is connected to an S port.

**Initial Condition:** IUT S port is not connected. The IUT is isolated.

**Test Actions:** Connect IUT S port to Tester S port.

**Pass_Fail Criteria:**

The connection is accepted by the IUT and the IUT's MAC is inserted on the ring. See figure 22.
MIB:
- SMT.CF_State = wrap_s or c_wrap_s;
- S:CurrentPathType = primary or concatenated;
- S:MyTypeType = s;
- S:NeighborTypeType = s;
- S:RequestedPathsType = peer.

SRF Report:
- Port Path Change Event;
- MAC Path Change Event;
- Peer Wrap Condition.

## 7.7 Single Attachment Concentrator

This test group verifies the conformance of CFM for Single Attachment Concentrators (SAC). It consists of five ordered test cases that test concentrator functionality. Table 4 summarizes this test group.

An SAC may or may not have a MAC. An SAC with a MAC is also an SAS. An SAS with a MAC shall first be verified as an SAS using the test procedures specified in 7.6 above. All concentrator M ports shall be isolated during this test.

This test group consists of 5 test cases that test concentrator functionality. The assumptions of the Pass_Fail Criteria specified in this test group are that:

- the implementation's M port PermittedPath bits follow the default settings given in ISO/IEC 9314-6:1998;
- the implementation performs path selection based solely on the rules specified in ISO/IEC 9314-6:1998 for the M port alternate PermittedPath bits;
- the implementation does not further restrict the choice among the various alternates based on implementator defined conditions.



Copyright International Organization for Standardization
Provided by IHS under license with ISO
No reproduction or networking permitted without license from IHS Not for Resale

The detailed Pass_Fail Criteria specified below in this subclause are applicable to such implementations only. Note that item 6 of the Selection criteria in ISO/IEC 9314-6:1998 does specifically permit further restriction of the choice among various alternatives based on implementor defined conditions. This test group may also be used to test such concentrators. However, for conformance tests of such implementations the Pass_Fail Criteria are limited to the following:

- The MIB attributes listed below are consistent with the configuration of the station as determined by the ring maps constructed by the tester (note that MIB attributes cannot be checked in concentrators with no MAC);
- Any active M port is inserted in either the primary or secondary path;
- No wrap conditions exist where a MAC is not placed on the wrapped path. That is the IUT withholds connections with its S port whenever the result of the connection would be a wrap with no MAC on the path.

An SAC may have a MAC, or it may have no MAC. Both kinds of SACs may be verified with this test group. In each case the test actions are identical for SACs with and without a MAC, however the pass_fail criteria are different. Therefore each test case includes separate pass-fail criteria for SACs with a MAC and SACs with no MAC.

The functionality of two concentrator M ports is tested in this test group. These are labeled M1 and M2 and can be any two arbitrarily selected M ports.

For concentrators with a MAC, the correct value of the following MIB parameters shall be verified using PMF Get Request Frames for each test case configuration:

- CF-State;
- S:CurrentPathType;
- S:MyTypeType;
- S:NeighborTypeType;
- S:RequestedPathsType;
- M1:CurrentPathType;
- M1:MyTypeType;
- M1:NeighborTypeType;
- M1:RequestedPathsType;
- M2:CurrentPathType;
- M2:MyTypeType;
- M2:NeighborTypeType;
- M2:RequestedPathsType.

For concentrators with a MAC, the SRF verification portion of the test requires that the test cases be executed in the order specified. The generation of appropriate SRF frames for each configuration test step shall be verified for the following events and conditions:

- MAC Path Change Event;
- Port Path Change Event.

In the case of no MAC concentrators the Pass_Fail Criteria are only the ring maps, since with no MAC the MIB is not accessible and events are not reported.

### 7.7.1 Case-ID: SAC_1

**Test Purpose:** Test configuration when IUT S port is connected to an M port.

**Initial Condition:** IUT S, M1 and M2 ports not connected. The IUT is isolated.

**Test Actions:** Connect IUT S port to Tester M port.

**Pass_Fail Criteria:**

**a. No MAC concentrator**
The IUT passes if the connection between the tester and the IUT S port is withheld. The IUT fails if the connection between the tester and the IUT s port is established. See figure 23.


Copyright International Organization for Standardization
Provided by IHS under license with ISO
No reproduction or networking permitted without license from IHS Not for Resale

**b. Concentrator with MAC**
IUT configuration: see figure 24.
MIB:
- SMT.CF_State = wrap_s or c_wrap_s;
- S:CurrentPathType = primary or concatenated;
- S:MyTypeType = s;
- S:NeighborTypeType = m;
- S:RequestedPathsType = tree;
- M1:CurrentPathType = isolated;
- M1:MyTypeType = m;
- M1:NeighborTypeType = none;
- M1:RequestedPathsType = none;
- M2:CurrentPathType = isolated;
- M2:MyTypeType = m;
- M2:NeighborTypeType = none;
- M2:RequestedPathsType = none.

SRF Report:
- Port Path Change Event;
- MAC Path Change Event.

### 7.7.2 Case-ID: SAC_2

**Test Purpose:** Test configuration when IUT S port is connected to an M port, IUT M1 port is connected to Tester S port.

**Initial Condition:** IUT S port is connected to Tester M port.

**Test Actions:** Connect IUT M1 port to Tester S port.

**Pass_Fail Criteria:**

**a. No MAC Concentrator**

The IUT passes if a ring is established through the concentrator joining the two testers in one ring. The IUT fails if a ring joining the two testers is not established. See figure 23.

**b. Concentrator with MAC**
IUT configuration: see figure 24.
MIB:
- SMT.CF_State = wrap_s or c_wrap_s;
- S:CurrentPathType = primary or concatenated;
- S:MyTypeType = s;
- S:NeighborTypeType = m;
- S:RequestedPathsType = tree;
- M1:CurrentPathType = primary or concatenated;
- M1:MyTypeType = m;
- M1:NeighborTypeType = s;
- M1:RequestedPathsType = tree;
- M2:CurrentPathType = isolated;
- M2:MyTypeType = m;
- M2:NeighborTypeType = none;
- M2:RequestedPathsType = none.

SRF Report:
- Port Path Change Event;
- MAC Path Change Event.



Copyright International Organization for Standardization
Provided by IHS under license with ISO
No reproduction or networking permitted without license from IHS Not for Resale

### 7.7.3 Case-ID: SAC_3

**Test Purpose:** Test configuration when IUT S port is connected to an M port, IUT M1 and M2 ports are connected to Tester S ports.

**Initial Condition:** IUT S port is connected to Tester M port and IUT M1 port is connected to Tester S port.

**Test Actions:** Connect IUT M2 port to Tester S port.

**Pass_Fail Criteria:**

**a. No MAC Concentrator**
The IUT passes if a ring is established through the concentrator joining the three testers in one ring. The IUT fails if a ring joining the three testers is not established. See figure 23.

**b. Concentrator with MAC**
IUT configuration: see figure 24.
MIB:
- SMT.CF_State = wrap_s or c_wrap_s;
- S:CurrentPathType = primary or concatenated;
- S:MyTypeType = s;
- S:NeighborTypeType = m;
- S:RequestedPathsType = tree;
- M1:CurrentPathType = primary or concatenated;
- M1:MyTypeType = m;
- M1:NeighborTypeType = s;
- M1:RequestedPathsType = tree;
- M2:CurrentPathType = primary or concatenated;
- M2:MyTypeType = m;
- M2:NeighborTypeType = s;
- M2:RequestedPathsType = tree.

SRF Report:
- Port Path Change Event;
- MAC Path Change Event.

### 7.7.4 Case-ID: SAC_4

**Test Purpose**: Test configuration when IUT S port is isolated while IUT M1 and M2 ports are connected to Tester S ports.

**Initial Condition**: IUT S port is connected to Tester M port and IUT M1, M2 ports are connected to Tester S ports.

**Test Actions**: Disconnect IUT S port.

**Pass_Fail Criteria**:

**a. No MAC Concentrator**
The IUT passes if a ring is established through the concentrator joining the two testers in one ring. The IUT fails if a ring joining the two testers is not established. See figure 23.

**b. Concentrator with MAC**
IUT configuration: see figure 24.
MIB:
- SMT.CF_State = isolated;
- S:CurrentPathType = isolated;
- S:MyTypeType = s;
- S:NeighborTypeType = none;
- S:RequestedPathsType = none;
- M1:CurrentPathType = primary or concatenated;
- M1:MyTypeType = m;
- M1:NeighborTypeType = s;


Copyright International Organization for Standardization
Provided by IHS under license with ISO
No reproduction or networking permitted without license from IHS Not for Resale

- M1:RequestedPathsType = tree;
- M2:CurrentPathType = primary or concatenated;
- M2:MyTypeType = m;
- M2:NeighborTypeType = s;
- M2:RequestedPathsType = tree.

SRF Report:

- Port Path Change Event;
- MAC Path Change Event.

### 7.7.5 Case-ID: SAC_5

**Test Purpose:** Test configuration when IUT S port is isolated, and one IUT M port is connected to an S port.

**Initial Condition:** IUT S port is isolated and IUT M1 and M2 are connected to Tester S ports.

**Test Actions:** Disconnect IUT M1 port.

**Pass_Fail Criteria:**

**a. No MAC Concentrator**
The IUT passes if the connection between the IUT M2 port and the tester S port is rejected. The IUT fails if the connection between the tester S port and the IUT M1 port is not rejected. See figure 23.

**b. Concentrator with MAC**
IUT configuration: see figure 24.
MIB:

- SMT.CF_State = isolated;
- S:CurrentPathType = isolated;
- S:MyTypeType = s;
- S:NeighborTypeType = none;
- S:RequestedPathsType = none;
- M1:CurrentPathType = isolated;
- M1:MyTypeType = m;
- M1:NeighborTypeType = none;
- M1:RequestedPathsType = none;
- M2:CurrentPathType = primary or concatenated;
- M2:MyTypeType = m;
- M2:NeighborTypeType = s;
- M2:RequestedPathsType = tree.

SRF Report:

- Port Path Change Event;
- MAC Path Change Event.

## 7.8 M port Permitted Path option

An implementation may optionally have the capability to allow the Permitted Path bits for MACs and ports to be set to values other than the default values specified in ISO/IEC 9314-6:1998. This test group applies to dual attachment concentrators that implement the capability for users to set the secondary-preferred and primary-preferred permitted path bits of M ports. Users may wish to control the setting of M port permitted path bits for load balancing and to establish certain redundant configurations.

There are five test cases which shall be executed in order. The pass criteria are the sequence of ring maps. MIB parameters and SRF conditions and events are not examined in this test group. The test steps for single MAC and dual MAC DACs are identical, however the pass_fail criteria are different.

--`,,```,,,,````-`-`,,`,,`,`,,`---



Copyright International Organization for Standardization
Provided by IHS under license with ISO
No reproduction or networking permitted without license from IHS Not for Resale

For this test group two IUT M ports are used. One of these, labeled Mp, shall have its Tree mode Permitted Path bits set to:

local
secondary-alternate
primary-alternate
-
primary-preferred

The other M port, labeled Ms, shall have its Tree mode Permitted Path bits set to:

local
secondary-alternate
primary-alternate
secondary-preferred
-

### 7.8.1 Case-ID: PP_1

**Test Purpose**: Establish initial configuration with IUT in wrap state and all master ports isolated.

**Initial Condition:** The IUT is isolated.

**Test Actions:** Connect IUT A port to Tester B port and the IUT B port to the Tester M port.

**Pass_Fail Criteria:**

**a. Single MAC DAC**
The IUT enters the c_wrap_b CF_State with the IUT A to Tester B connection withheld. One ring with 3 MACs exists. See figure 25.

**b. Dual MAC DAC**
The IUT enters the wrap_ab CF_State. One ring exists with 4 MACs. See figure 26.

### 7.8.2 Case-ID: PP_2

**Test Purpose:** Test configuration when an S port is connected to IUT Mp port.

**Initial Condition:** The IUT A port is connected to the Tester B port and the IUT B port is connected to the Tester M port.

**Test Actions:** Connect IUT Mp port to Tester S port.

**Pass_Fail Criteria:**

**a. Single MAC DAC**
The IUT remains in the c_wrap_b CF_State with the IUT A to Tester B connection withheld. The IUT Mp port is included in the concatenated path and one ring with 4 MACs exists. See figure 25

**b. Dual MAC DAC**
The IUT remains in the wrap_ab CF_State. The IUT Mp port is included in the primary path and one ring exists with 5 MACs. See figure 26.

### 7.8.3 Case-ID: PP_3

**Test Purpose**: Test configuration when an S port is connected to the IUT Ms port. This case also tests the "tree pruning" algorithm for the single MAC concentrator, since a MAC becomes available on the secondary path when the Ms port is connected to an S port.

**Initial Condition:** The IUT is A port is connected to the Tester B port and the IUT B port is connected to the Tester M port. A Tester S port is connected to the IUT Mp port.

**Test Actions:** Connect IUT Ms port to Tester S port.


Copyright International Organization for Standardization
Provided by IHS under license with ISO
No reproduction or networking permitted without license from IHS Not for Resale

**Pass_Fail Criteria:**

**a. Single MAC DAC**
The connection between the Tester B port and the IUT A port is initialized and the IUT goes to the wrap_ab CF_State. The IUT Ms port is included in the secondary path and one ring with 5 MACs exists. See figure 25.

**b. Dual MAC DAC**
The IUT remains in the wrap_ab CF_State. The IUT Ms port is included in the secondary path and one ring exists with 6 MACs. See figure 26.

### 7.8.4 Case-ID: PP_4

**Test Purpose**: Test configuration when the IUT B port is disconnected from the Tester M port.

**Initial Condition:** The IUT A port is connected to the Tester B port and the IUT B port is connected to the Tester M port. Tester S ports are connected to the IUT Mp and Ms ports.

**Test Actions:** Disconnect the Tester M port and IUT B ports.

**Pass_Fail Criteria:**

**a. Single MAC DAC**
The IUT enters the c_wrap_a CF_State. One ring with 5 MACs exists. See figure 25.

**b. Dual MAC DAC**
The IUT enters the c_wrap_a CF_State and one ring exists with 6 MACs. See figure 26.

### 7.8.5 Case-ID: PP_5

**Test Purpose:** Test configuration when the IUT B port is connected to the Tester A port, allowing a dual ring to be established.

**Initial Condition:** The IUT is A port is connected to the Tester B. Tester S ports are connected to the IUT Mp and Ms ports.

**Test Actions:** Connect the IUT B port to the Tester A port.

**Pass_Fail Criteria:**

**a. Single MAC DAC**
The IUT enters the thru CF_state and a dual ring exists. The primary ring has 3 MACs and the secondary ring has 2 MACs. See figure 25.

**b. Dual MAC DAC**
The IUT enters the thru CF_State and a dual ring exists. Both the primary and secondary rings have 3 MACs. See figure 26.

## 7.9 Test Description Ring Hold Option

This test group applies to dual attachment stations that implement the Ring Hold Option. These are dual attachment stations subject to the provisions of 7.4. To perform these tests both the IUT and the Tester are DAS that implement the Ring Hold Option. This option is evident in CFM only when one of the two links in a peer connection is interrupted. Therefore a test cable assembly is required in which one of the two links can be interrupted.

There are three test cases which shall be executed in order. The pass criteria are the sequence of ring maps. MIB parameters are not examined in this test group.

--`,,```,,,,````-`-`,,`,,`,`,,`---



Copyright International Organization for Standardization
Provided by IHS under license with ISO
No reproduction or networking permitted without license from IHS Not for Resale

### 7.9.1 Case-ID: RH_1

**Test Purpose**: Initialize IUT in a dual ring.

**Initial Condition:** The IUT is isolated.

**Test Actions:** Connect IUT A port to Tester B port and the IUT B port to the Tester A port.

**Pass_Fail Criteria:**

A dual ring is formed with two token paths, as shown in figure 27.

### 7.9.2 Case-ID: RH_2

**Test Purpose:** Test configuration when one of two links is interrupted.

**Initial Condition:** IUT A port is connected to Tester B port and IUT B port is connected to Tester A port. A normal dual ring is in effect.

**Test Actions:** Interrupt the link exiting from the Tester A port, so that the input to the IUT B port is dark.

**Pass_Fail Criteria:**

The IUT remains in the thru CF_State and does not wrap. The primary ring remains operational as shown in figure 27.

**Case-ID: RH_3**

**Test Purpose:** Test configuration when the complete connection is removed, causing both the primary and secondary rings to become nonoperational.

**Initial Condition:** The link exiting the Tester A port and entering the IUT B port is interrupted, interrupting the secondary ring. The primary ring remains held operational and the IUT is in the thru state due to the Ring Hold option.

**Test Actions:** Disconnect the cable linking the Tester A port and the IUT B port. This breaks both rings.

**Pass_Fail Criteria:**
IUT wraps as shown in figure 27 and a single wrapped ring is formed. Note that the recovery process is complex and results from the fact that both rings become nonoperational. Several seconds may be needed before the reconfiguration to a wrapped ring is complete.

--`,,```,,,,````-`-`,,`,,`,`,,`---



Copyright International Organization for Standardization
Provided by IHS under license with ISO
No reproduction or networking permitted without license from IHS Not for Resale

**Table 1 - DAS Configuration Test Case Summary**

| | | IUT Port | | Pass Criteria IUT Final State | |
|---|---|---|---|---|---|
| **No.** | **Test Action** | **A** | **B** | **single MAC** | **Dual MAC** |
| 1 | plug tester B to IUT A | B | - | c_wrap_a | c_wrap_a |
| 2 | plug tester A to IUT B | B | A | thru | thru |
| 3 | unplug IUT A | - | A | c_wrap_b | c_wrap_b |
| 4 | plug tester M to IUT A | M | A | c_wrap_b | wrap_ab |
| 5 | unplug IUT B | M | - | c_wrap_a | c_wrap_a |
| 6 | plug tester B to IUT B | M | B | c_wrap_b | c_wrap_ab |
| 7 | unplug IUT A | - | B | c_wrap_b | c_wrap_b |
| 8 | plug tester S to IUT A | S | B | thru | thru |
| 9 | unplug IUT B | S | - | c_wrap_a | c_wrap_a |
| 10 | plug tester M to IUT B | S | M | c_wrap_b | wrap_ab |
| 11 | unplug IUT A | - | M | c_wrap_b | c_wrap_b |
| 12 | plug tester A to IUT A | A | M | c_wrap_b | wrap_ab |
| 13 | unplug IUT B | A | - | c_wrap_a | c_wrap_a |
| 14 | plug tester S to IUT B | A | S | thru | thru |
| 15 | unplug IUT A | - | S | c_wrap_b | c_wrap_b |
| 16 | plug tester B to IUT A | B | S | thru | thru |
| 17 | unplug IUT B | B | B | thru | thru |
| 18 | unplug IUT B | B | M | c_wrap_b | wrap_ab |
| 19 | unplug IUT A | M | M | c_wrap_b | wrap_ab |
| 20 | unplug IUT B | M | S | c_wrap_b | wrap_ab |
| 21 | unplug IUT A | S | S | thru | thru |
| 22 | unplug IUT B | S | A | thru | thru |
| 23 | unplug IUT A | A | A | thru | thru |
| 24 | unplug IUT B plug tester to IUT B | A | B | thru | thru |



Copyright International Organization for Standardization
Provided by IHS under license with ISO
No reproduction or networking permitted without license from IHS
Not for Resale

**Table 2 - DAC Configuration Test Case Summary**

| No. | Test Action | Current_Path_Type | | CF_State | |
|---|---|---|---|---|---|
| | | Port M1 | Port M2 | single MAC | dual MAC |
| 1 | connect IUT M1 to tester S | primary | isolated | isolated | isolated |
| 2 | connect IUT M2 to tester S | primary | primary | isolated | isolated |
| 3 | connect IUT A to tester B | primary | primary | c_wrap_a | c_wrap_a |
| 4 | connect IUT B to tester A | primary | primary | thru | thru |
| 5 | disconnect IUT A | primary | primary | c_wrap_b | c_wrap_b |
| 6 | connect IUT A to tester M | primary | primary | c_wrap_b | wrap_ab |
| 7 | disconnect IUT B | primary | primary | c_wrap_a | c_wrap_a |
| 8 | connect IUT B to tester M | primary | primary | c_wrap_b | wrap_ab |
| 9 | disconnect IUT M1 | isolated | primary | c_wrap_b | wrap_ab |
| 10 | disconnect IUT M2 | isolated | isolated | c_wrap_b | wrap_ab |

**Table 3 - SAS Configuration Test Summary**

| No. | Test Action | CF_State |
|---|---|---|
| 1 | connect IUT S to Tester M | wrap_s or c_wrap_s |
| 2 | connect IUT S to Tester A | wrap_s or c_wrap_s |
| 3 | connect IUT S to Tester B | wrap_s or c_wrap_s |
| 4 | connect IUT S to Tester S | wrap_s or c_wrap_s |

**Table 4 - SAC Configuration Test Case Summary**

| No. | Test Action | Current_Path_Type | | CF_State | |
|---|---|---|---|---|---|
| | | Port M1 | Port M2 | No MAC | with MAC |
| 1 | connect IUT S to tester M | isolated | isolated | isolated | c_wrap_s |
| 2 | connect IUT M1 to tester S | primary | isolated | wrap_s | c_wrap_s |
| 3 | connect IUT M2 to tester S | primary | primary | wrap_s | c_wrap_s |
| 4 | disconnect IUT S | primary | isolated | isolated | isolated |
| 5 | disconnect IUT M1 | isolated | isolated | isolated | isolated |


Copyright International Organization for Standardization
Provided by IHS under license with ISO
No reproduction or networking permitted without license from IHS
Not for Resale

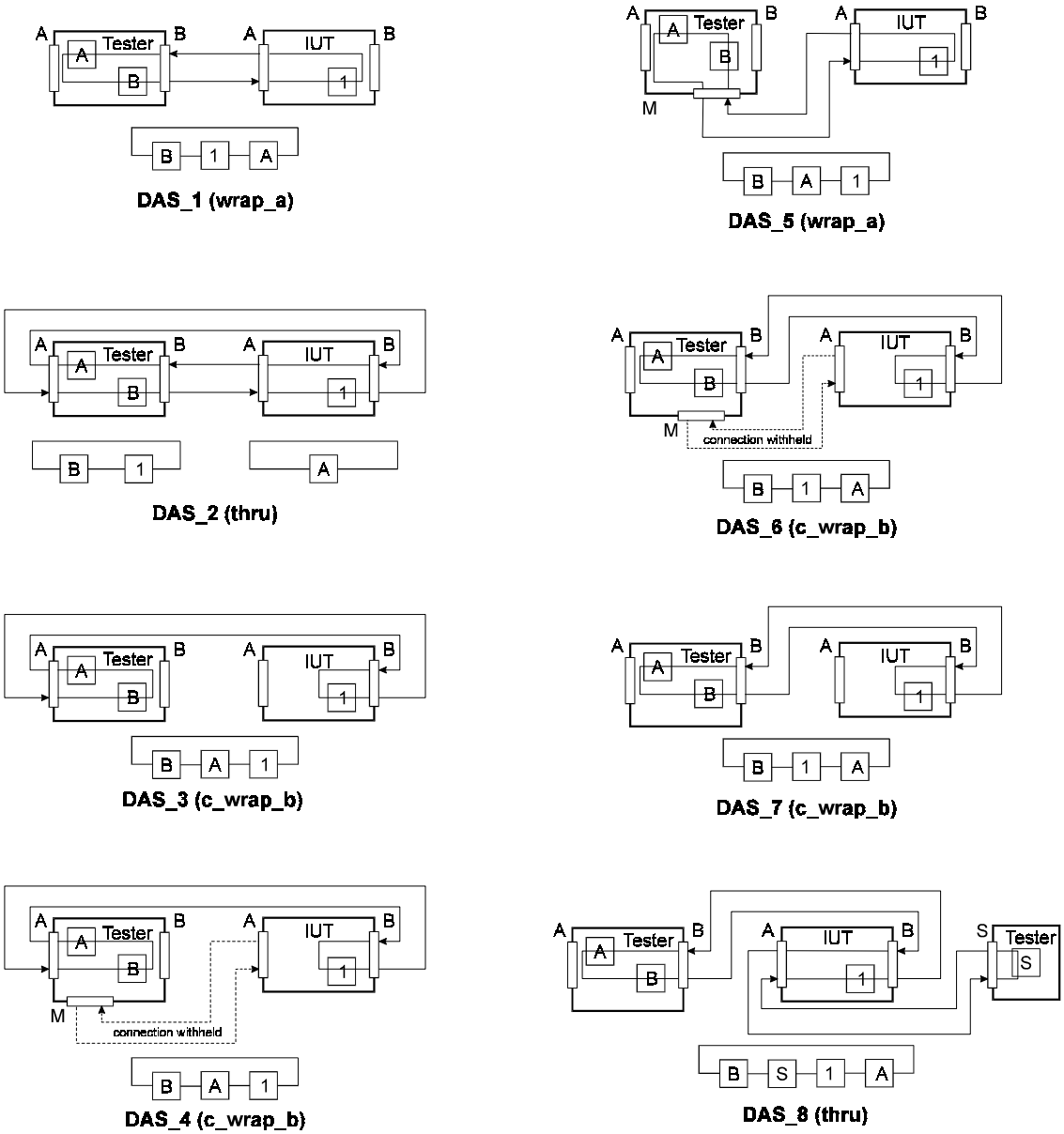


**Figure 12 - Single MAC DAS Test Configurations (1 of 3)**



Copyright International Organization for Standardization
Provided by IHS under license with ISO
No reproduction or networking permitted without license from IHS
Not for Resale

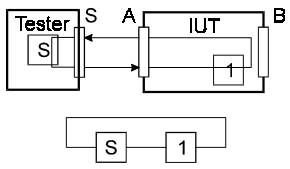


DAS_9 (c_wrap_a)

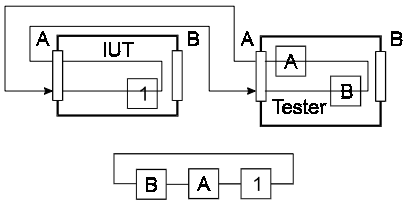


DAS_13 (c_wrap_a)

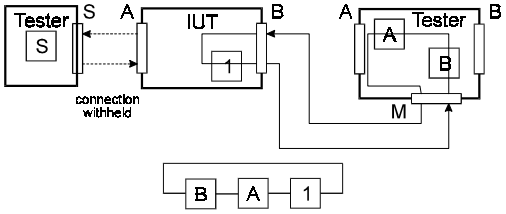


DAS_10 (c_wrap_b)

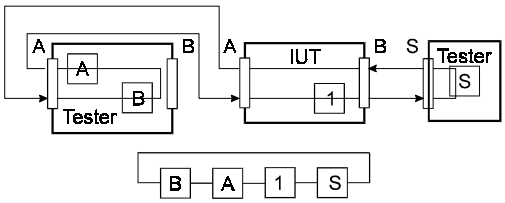


DAS_14 (thru)

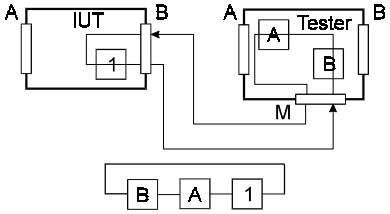


DAS_11 (c_wrap_b)

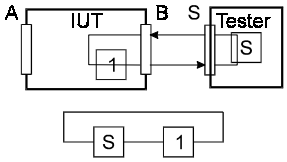


DAS_15 (c_wrap_b)

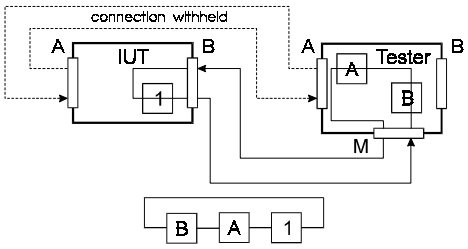


DAS_12 (c_wrap_b)

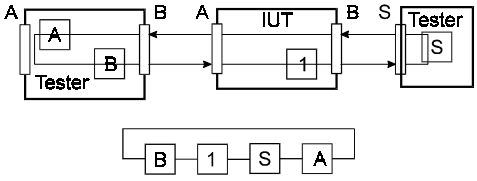


DAS_16 (thru)

**Figure 13 - Single MAC DAS Test Configurations (2 of 3)**


Copyright International Organization for Standardization
Provided by IHS under license with ISO
No reproduction or networking permitted without license from IHS
Not for Resale

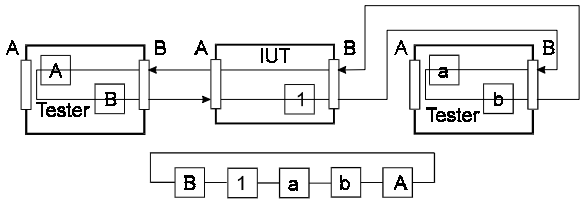


**DAS_17 (thru)**

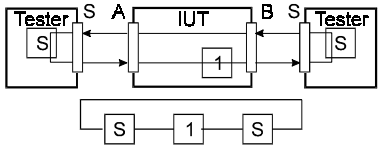


**DAS_21 (thru)**

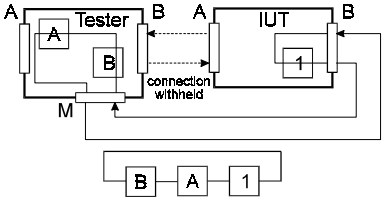


**DAS_18 (c_wrap_b)**

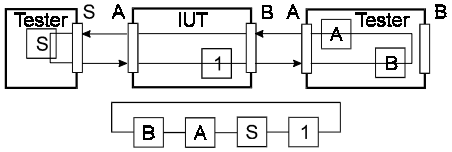


**DAS_22 (thru)**

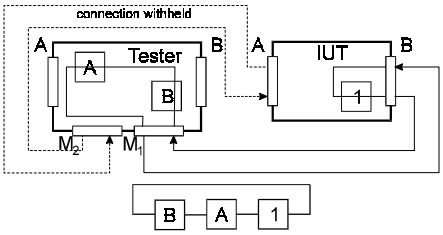


**DAS_19 (c_wrap_b)**

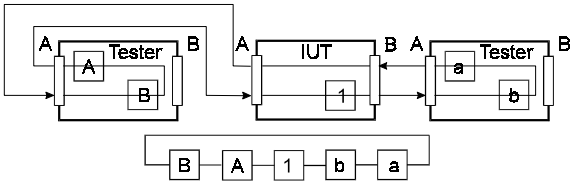


**DAS_23 (thru)**

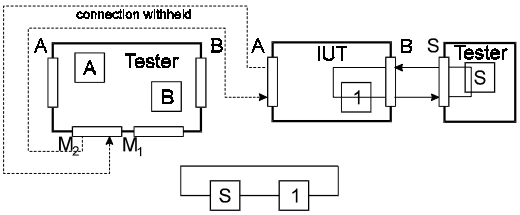


**DAS_20 (c_wrap_b)**

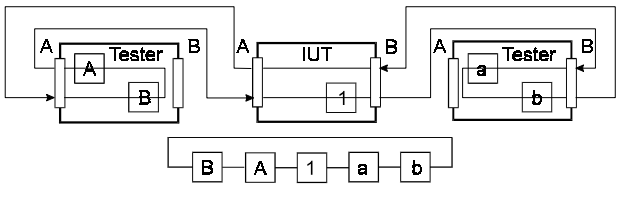


**DAS_24 (thru)**

**Figure 14 - Single MAC DAS Test Configurations (3 of 3)**



Copyright International Organization for Standardization
Provided by IHS under license with ISO
No reproduction or networking permitted without license from IHS
Not for Resale

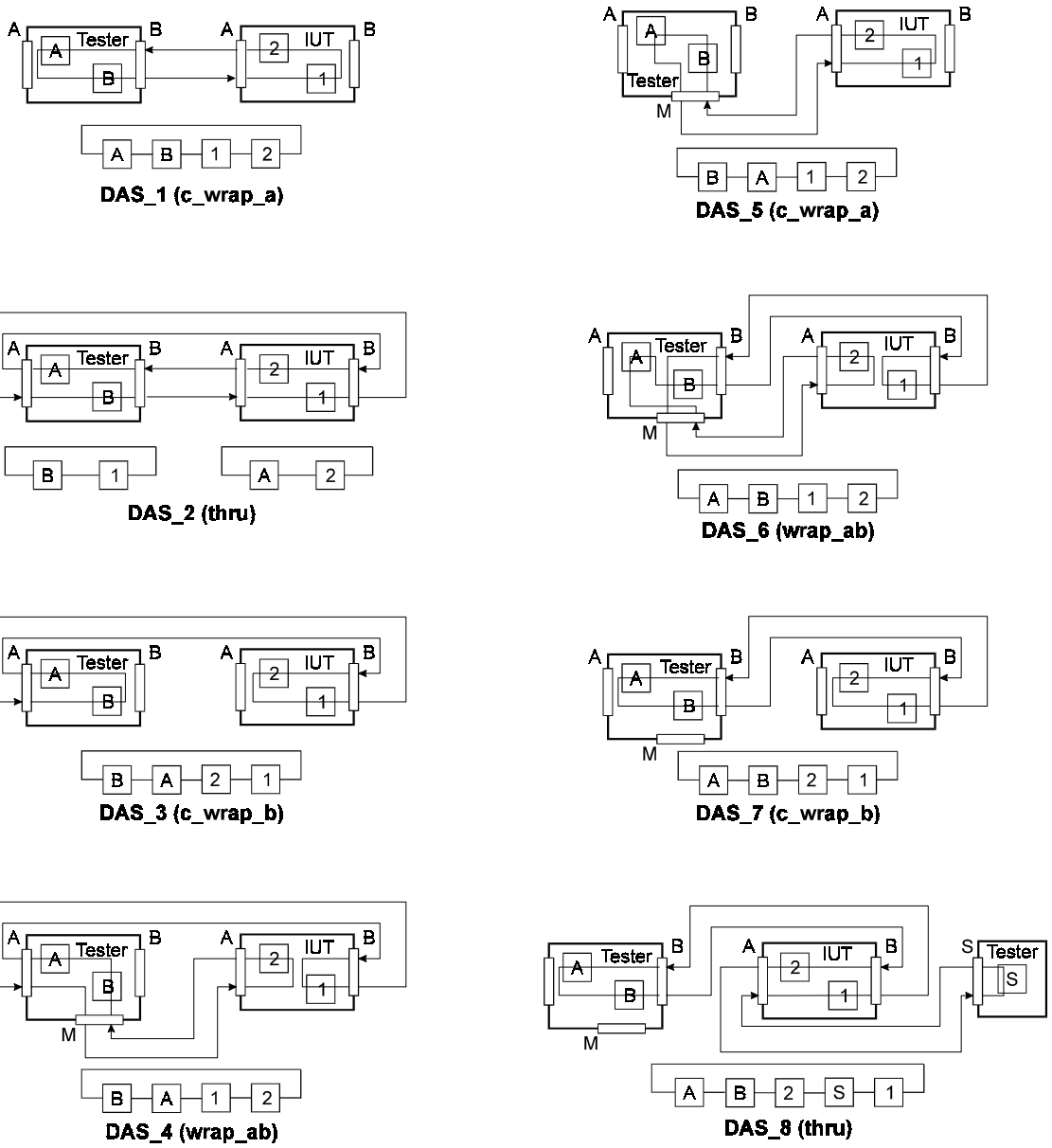


**Figure 15 - Dual MAC DAS Test Configurations (1 of 3)**


Copyright International Organization for Standardization
Provided by IHS under license with ISO
No reproduction or networking permitted without license from IHS
Not for Resale

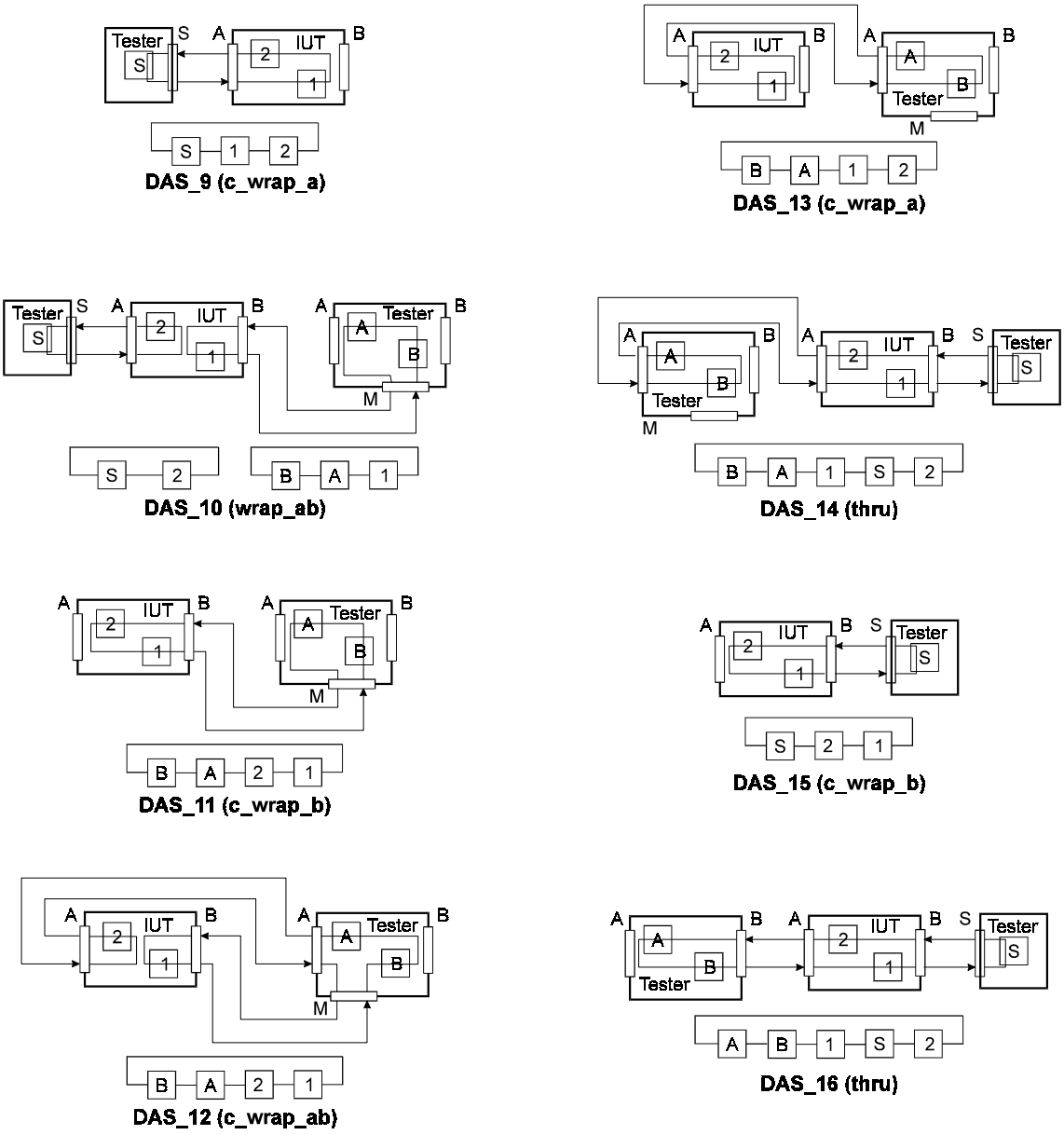


**Figure 16 - Dual MAC DAS Test Configurations (2 of 3)**



Copyright International Organization for Standardization
Provided by IHS under license with ISO
No reproduction or networking permitted without license from IHS
Not for Resale

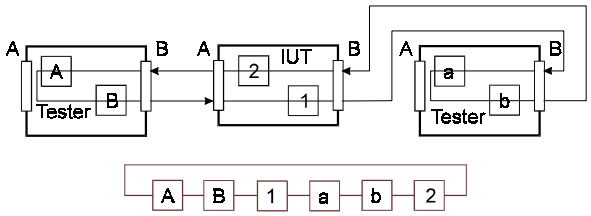


DAS_17 (thru)

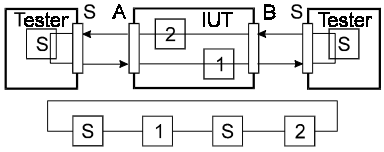


DAS_21 (thru)

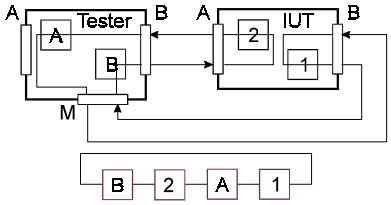


DAS_18 (wrap_ab)

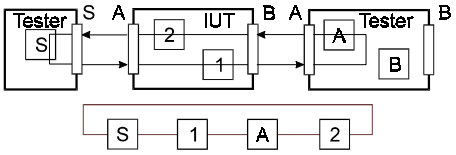


DAS_22 (thru)

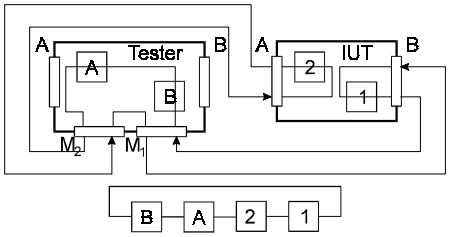


DAS_19 (wrap_ab)

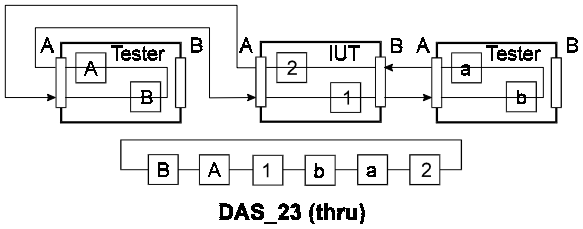


DAS_23 (thru)

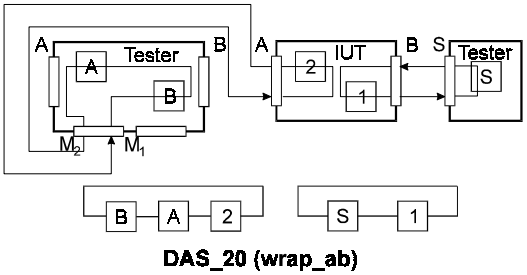


DAS_20 (wrap_ab)

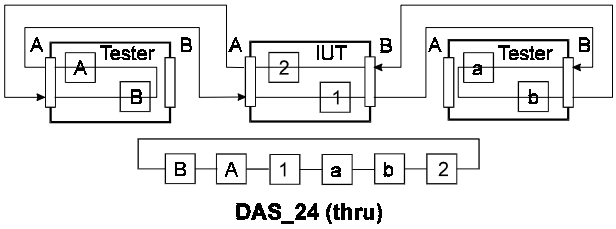


DAS_24 (thru)

**Figure 17 - Dual MAC DAS Test Configurations (3 of 3)**


Copyright International Organization for Standardization
Provided by IHS under license with ISO
No reproduction or networking permitted without license from IHS
Not for Resale

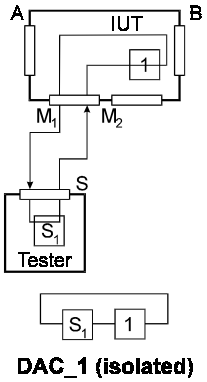


DAC_1 (isolated)

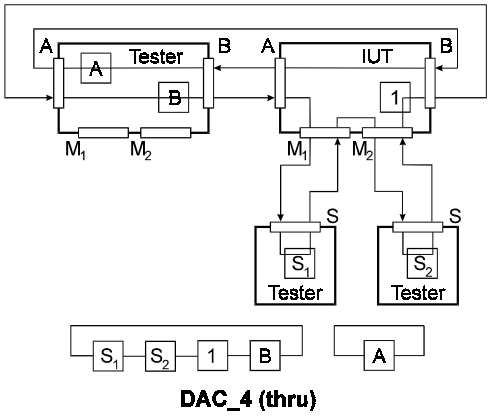


DAC_4 (thru)

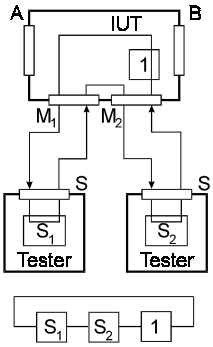


DAC_2 (isolated)

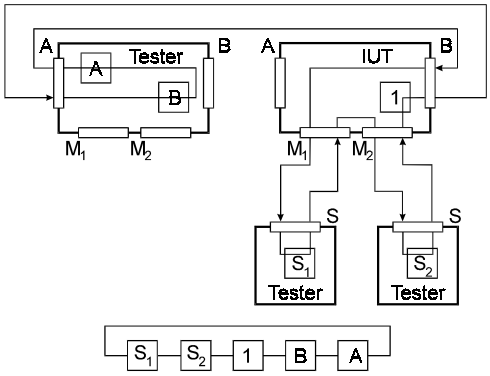


DAC_5 (c_wrap_b)

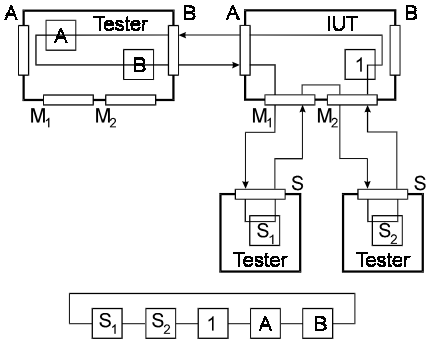


DAC_3 (c_wrap_a)

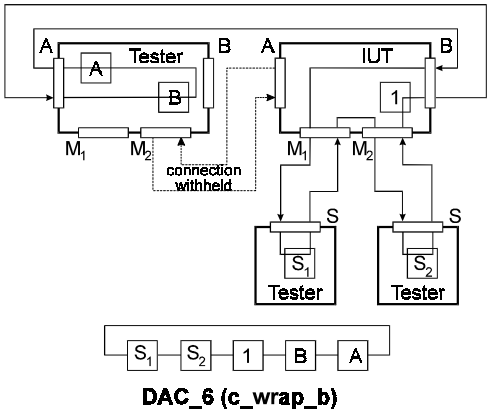


DAC_6 (c_wrap_b)

**Figure 18 - Single MAC DAC Test Configurations (1 of 2)**



Copyright International Organization for Standardization
Provided by IHS under license with ISO
No reproduction or networking permitted without license from IHS
Not for Resale

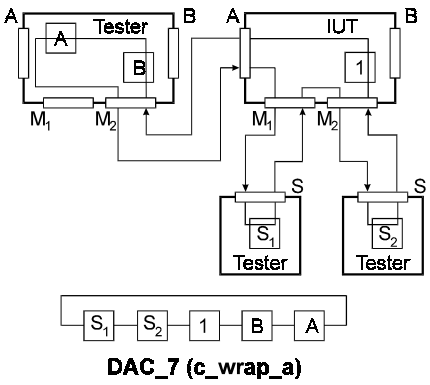


DAC_7 (c_wrap_a)

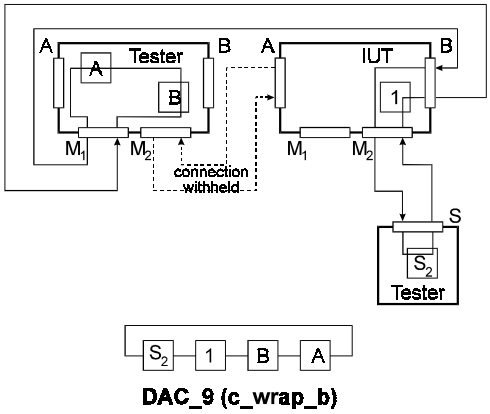


DAC_9 (c_wrap_b)

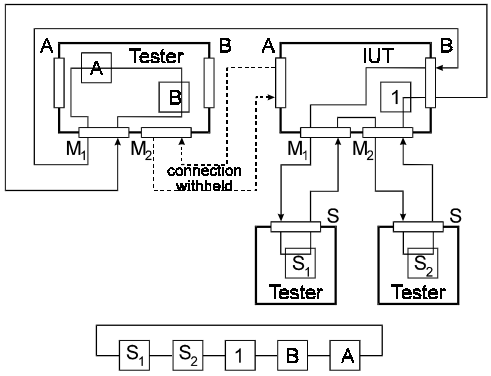


DAC_8 (c_wrap_b)

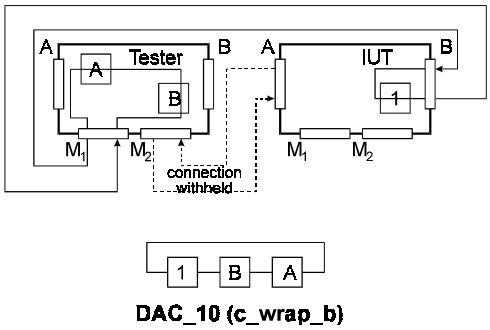


DAC_10 (c_wrap_b)

**Figure 19 - Single MAC DAC Test Configurations (2 of 2)**


Copyright International Organization for Standardization
Provided by IHS under license with ISO
No reproduction or networking permitted without license from IHS
Not for Resale

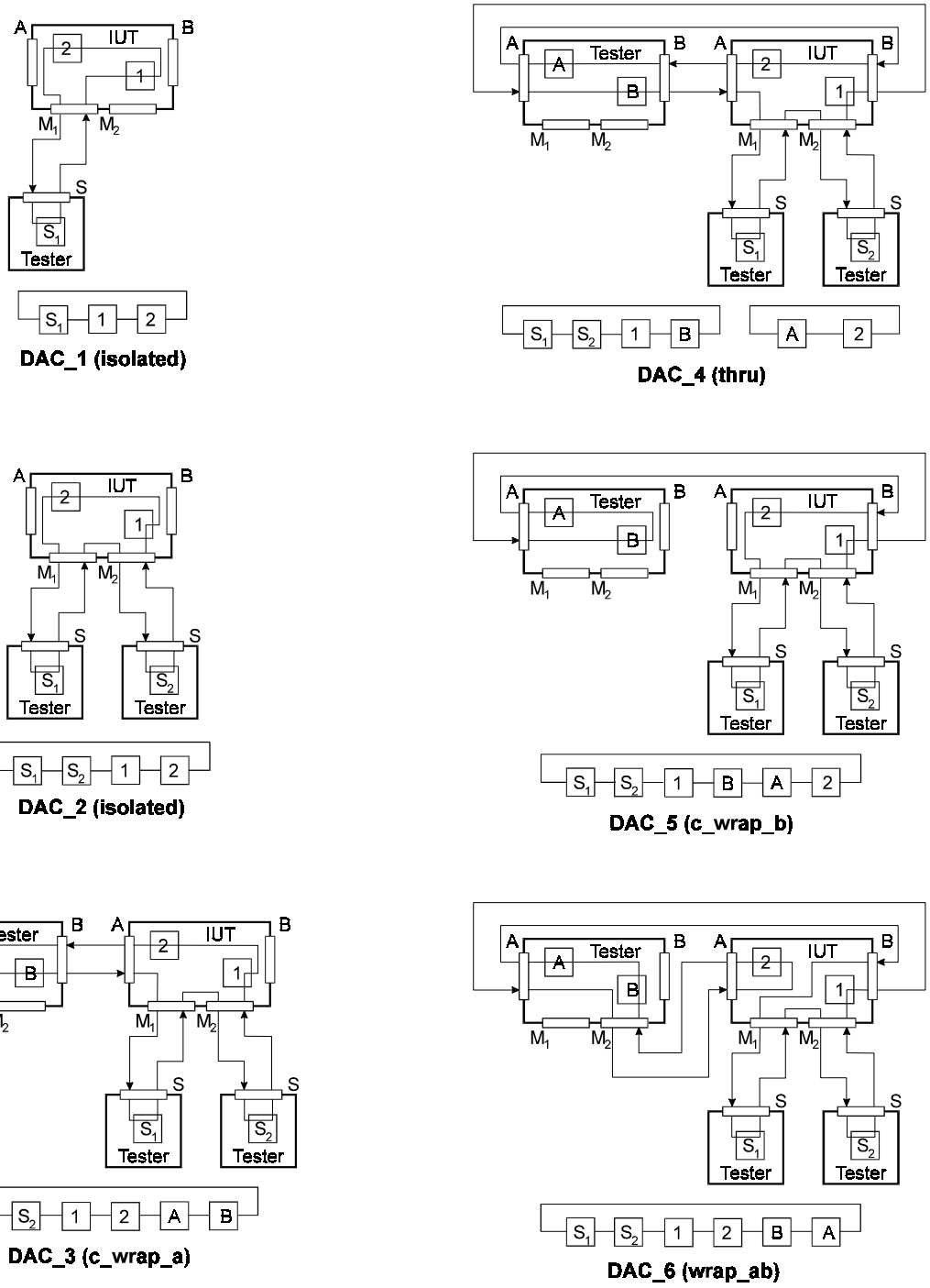


**Figure 20 - Dual MAC DAC Test Configurations (1 of 2)**



Copyright International Organization for Standardization
Provided by IHS under license with ISO
No reproduction or networking permitted without license from IHS
Not for Resale

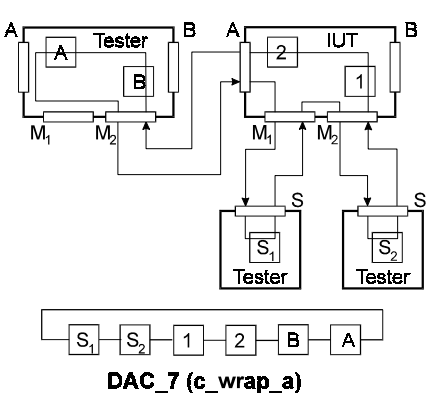


DAC_7 (c_wrap_a)

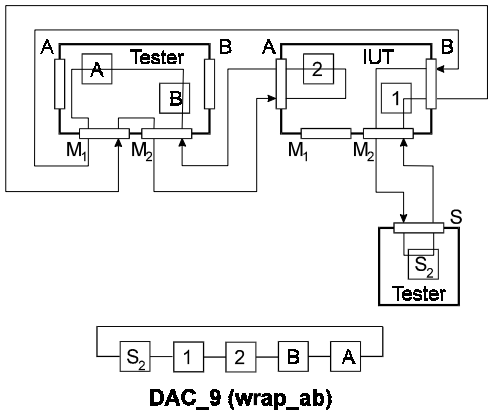


DAC_9 (wrap_ab)

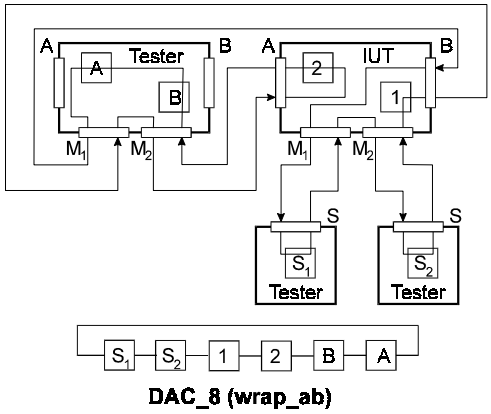


DAC_8 (wrap_ab)

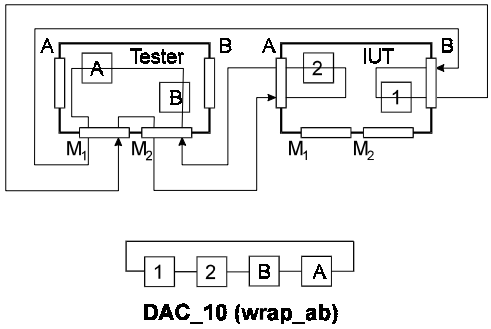


DAC_10 (wrap_ab)

**Figure 21 - Dual MAC DAC Test Configurations (2 of 2)**


Copyright International Organization for Standardization
Provided by IHS under license with ISO
No reproduction or networking permitted without license from IHS
Not for Resale

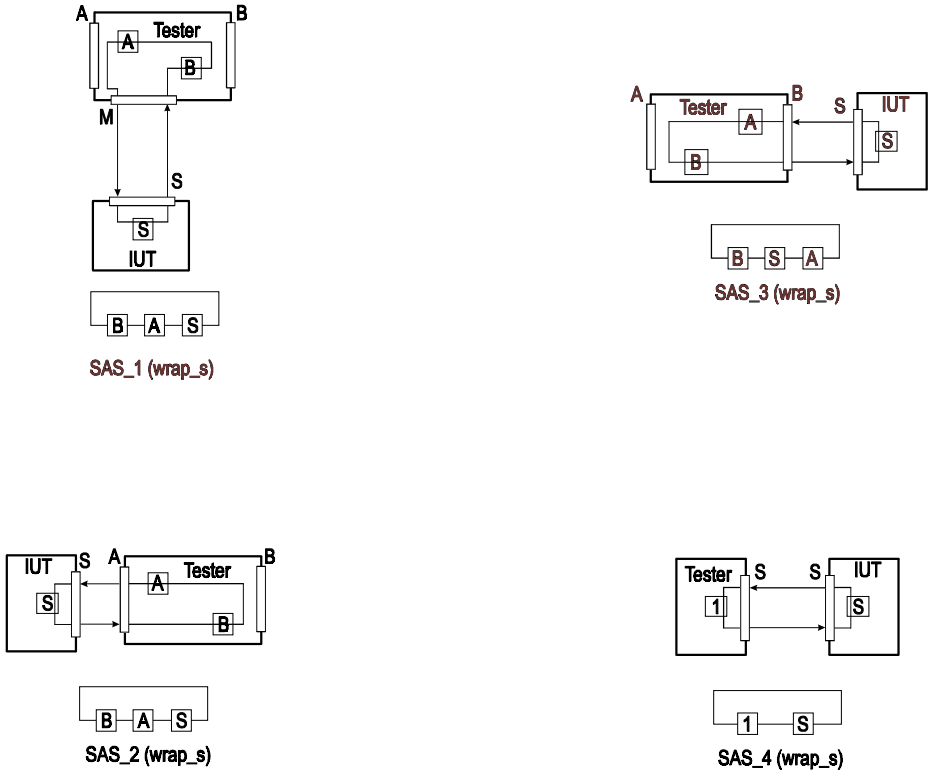


**Figure 22 - SAS Test Configurations**



Copyright International Organization for Standardization
Provided by IHS under license with ISO
No reproduction or networking permitted without license from IHS
Not for Resale

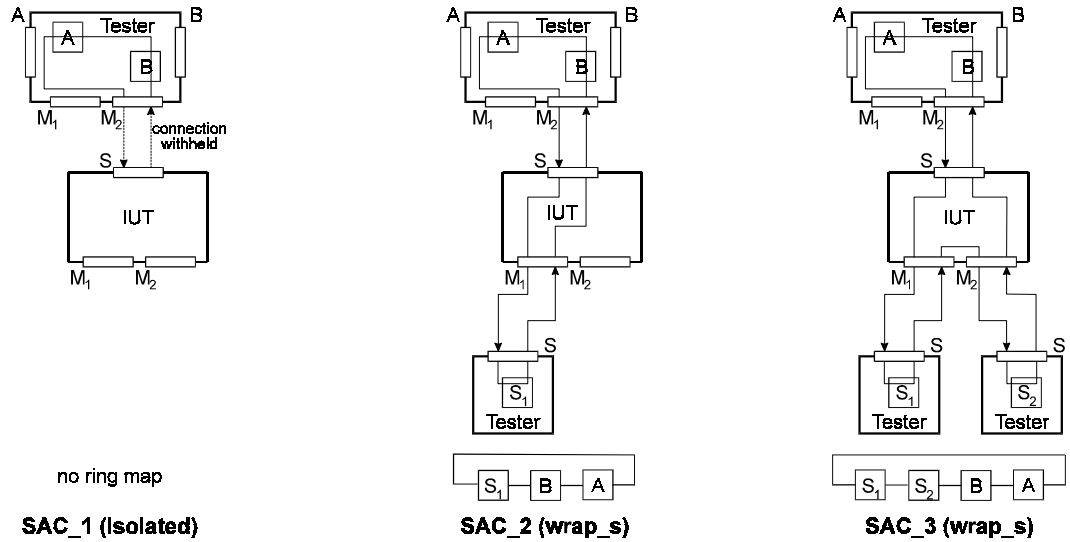


**Figure 23 - No MAC SAC Test Configurations**


Copyright International Organization for Standardization
Provided by IHS under license with ISO
No reproduction or networking permitted without license from IHS
Not for Resale

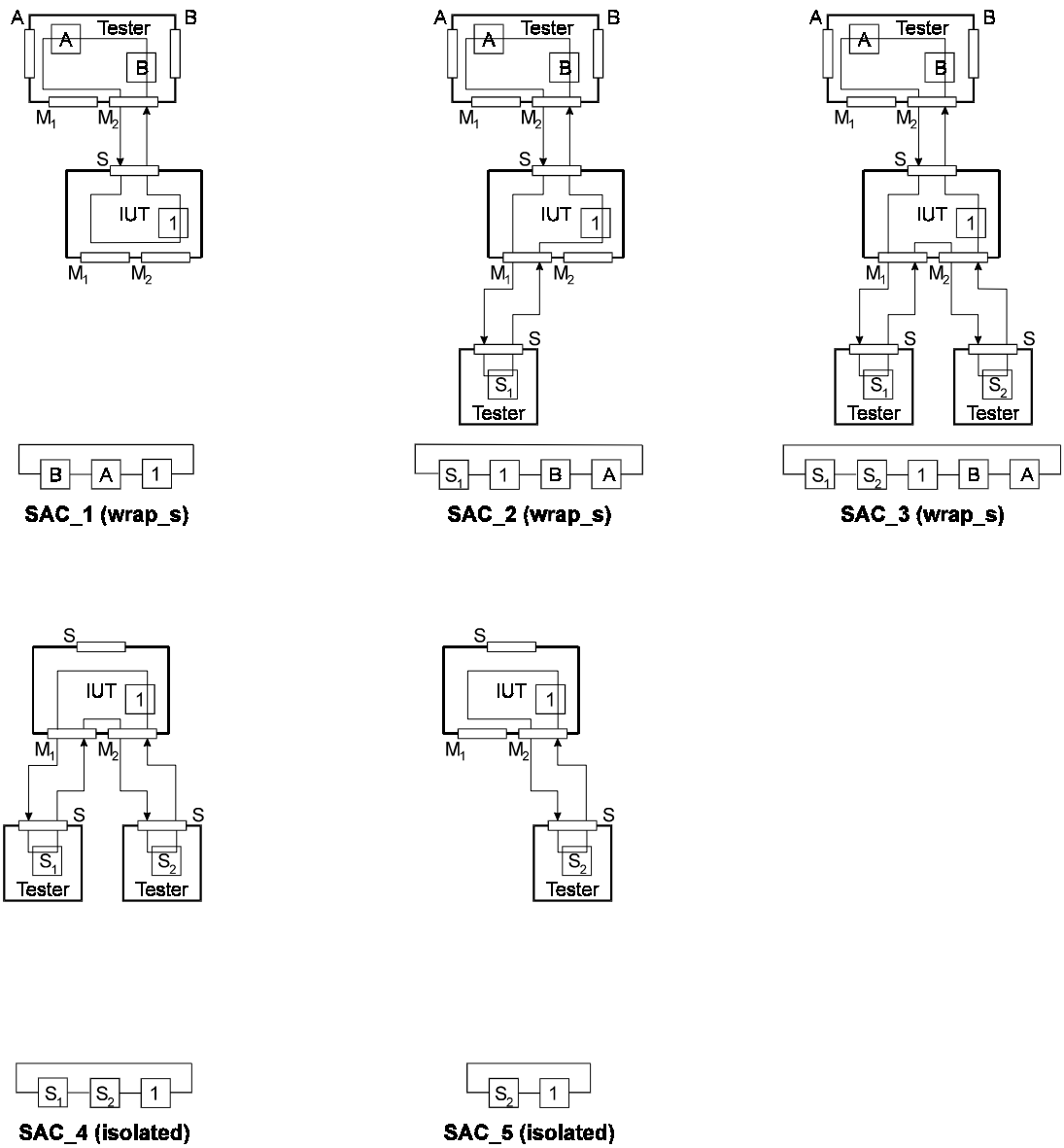


**Figure 24 - Single MAC SAC Test Configurations**



--`,,```,,,,````-`-`,,`,,`,`,,`---
Copyright International Organization for Standardization
Provided by IHS under license with ISO
No reproduction or networking permitted without license from IHS
Not for Resale

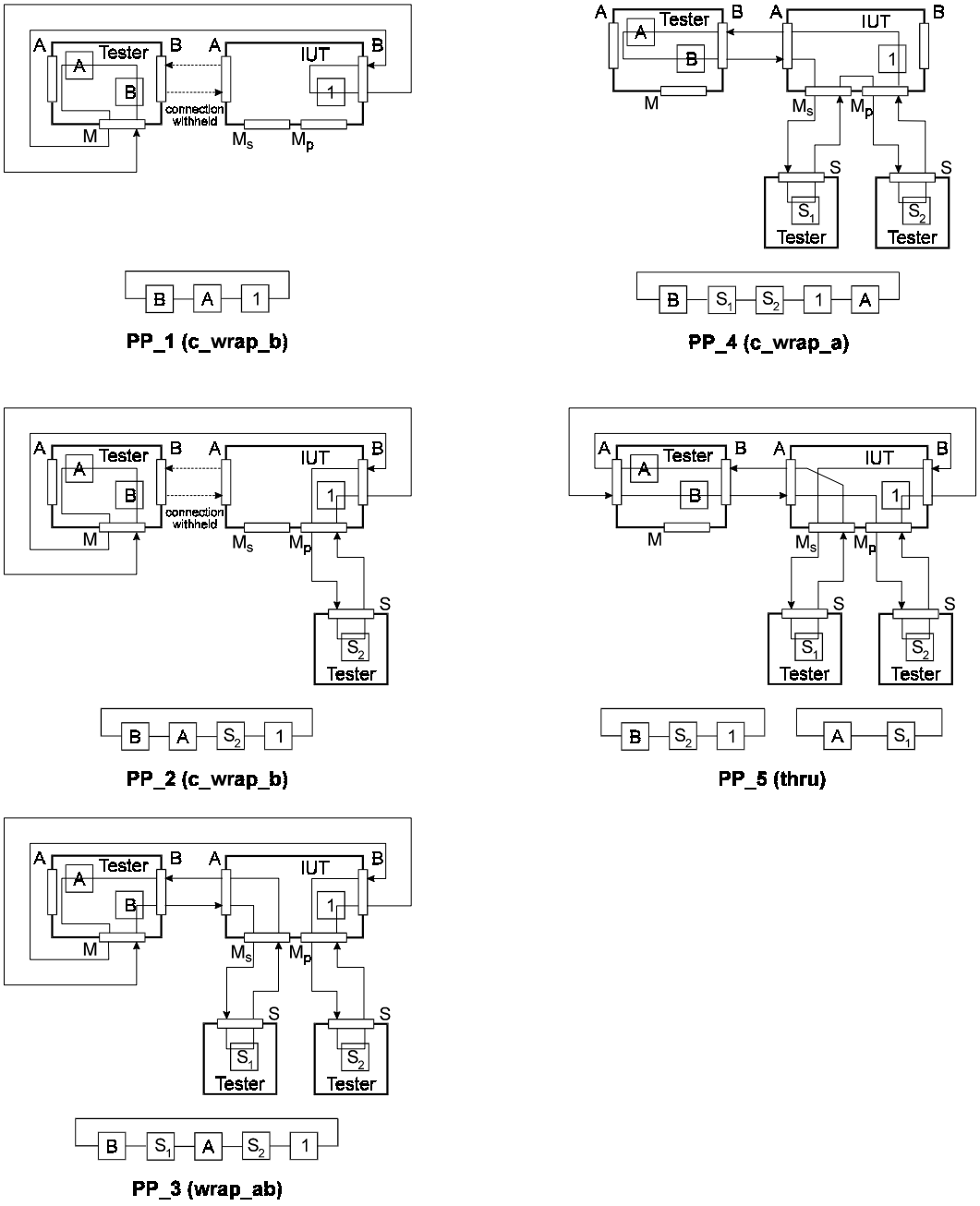


**Figure 25 - Optional Master Port Permitted Path Single MAC DAC Test Configurations**


Copyright International Organization for Standardization
Provided by IHS under license with ISO
No reproduction or networking permitted without license from IHS
Not for Resale

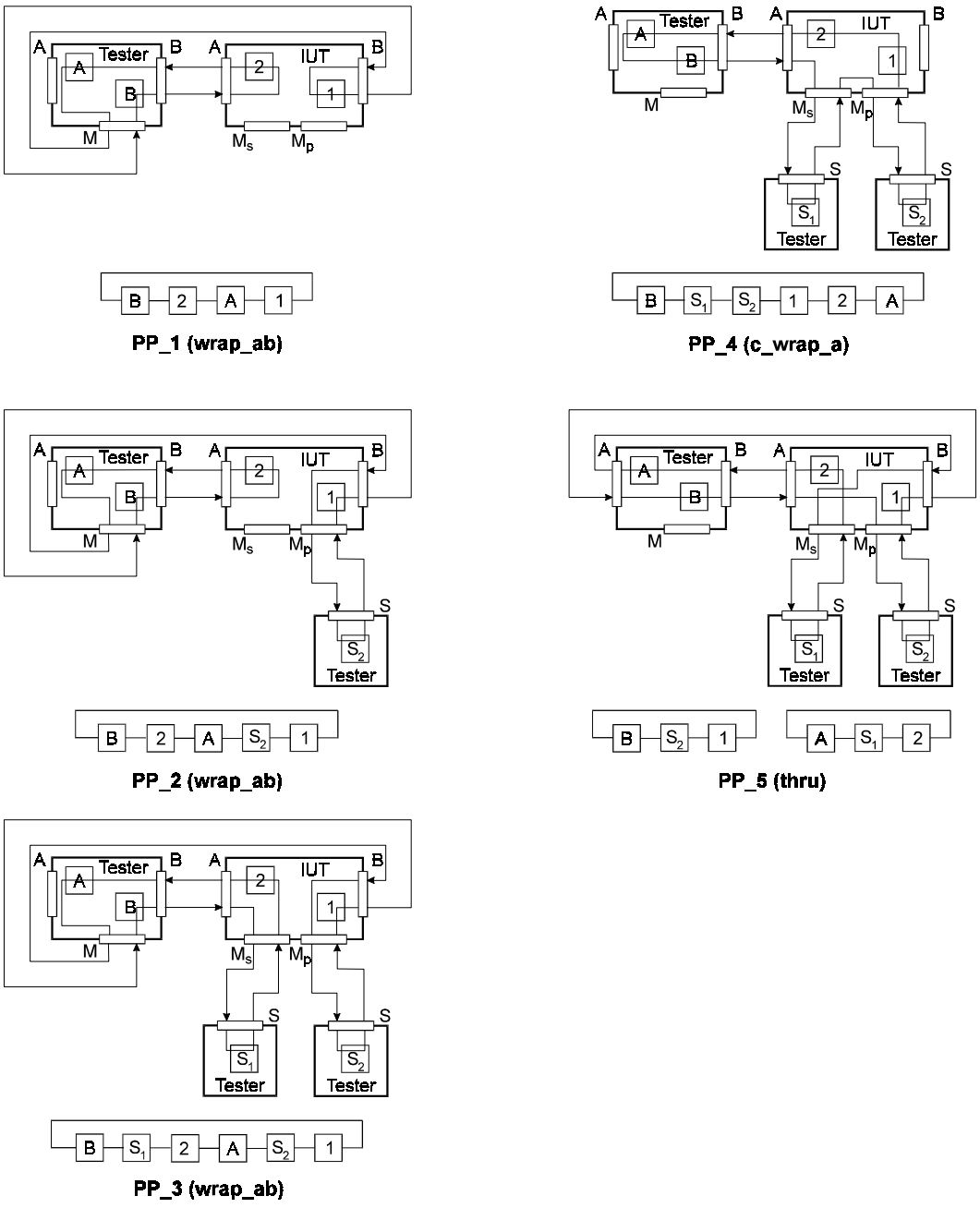


**Figure 26 - Optional Master Port Permitted Path Dual MAC DAC Test Configurations**



Copyright International Organization for Standardization
Provided by IHS under license with ISO
No reproduction or networking permitted without license from IHS
Not for Resale

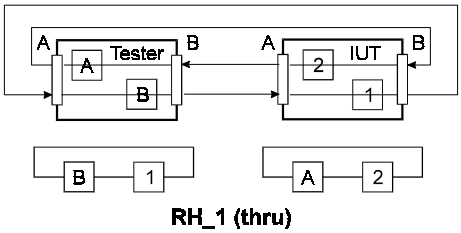


RH_1 (thru)

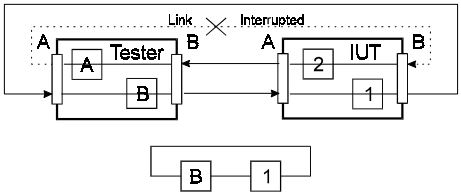


RH_2 (thru)

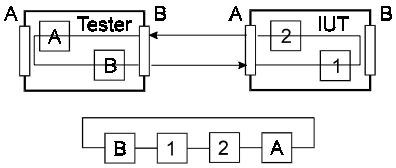


RH_3 (wrap_a)

**Figure 27 - Ring Hold Option DAS Test Configurations**


Copyright International Organization for Standardization
Provided by IHS under license with ISO
No reproduction or networking permitted without license from IHS
Not for Resale

# 8 Ring Management (RMT) - Abstract Test Suite

## 8.1 Test Suite Overview

| Test Suite Overview | | | |
|---|---|---|---|
| **Suite Name** : FDDI_RMT<br>**Standards ref** : ISO/IEC 9314-6:1998.<br>**PICS proforma ref** : ISO/IEC 9314-13:1997.<br>**PIXIT proforma ref** : Annex A of this standard.<br>**PICS/PIXIT use** : Test case selection and test suite parameters.<br>**Test Method(s)** : Remote Single Layer.<br>**Comments** : | | | |
| **Test Case Identifier** | **Test Case Reference** | **Page** | **Description** |
| My_Claim1 | FDDI_RMT/DUP_ADD_-RESOL/TX_TOKEN/My_Claim1 | 143 | Verify that IUT resolves a duplicate address condition on the ring when it receives its own Claim frame with Local Address after not Claiming or Beaconing for longer than 2 (D_Max). |
| My_Claim2 | FDDI_RMT/DUP_ADD_-RESOL/BEACONING/-My_Claim2 | 145 | Verify that IUT resolves a duplicate address condition on the ring when it receives its own Claim frame with Local Address while Beaconing for longer than 2 (D_Max). |
| My_Beacon | FDDI_RMT/DUP_ADD_-RESOL/My_Beacon | 146 | Verify that IUT resolves a duplicate address condition on the ring when it receives its own Beacon frame with Local Address while Claiming for longer than 2 (D_Max). |
| My_Claim_Diff_T_-Bid | FDDI_RMT/DUP_ADD_-RESOL/My_Claim_Diff_T_Bid | 147 | Verify that IUT resolves a duplicate address condition on the ring when it receives its own Claim frame with Universal Address and T_Bid<>T_Req and the time since T_Req changes is greater than 2(D_Max) |
| T_Ann | FDDI_RMT/DUP_ADD_-RESOL/T_Ann | 149 | Verify that IUT resolves a duplicate address condition on the ring when TRM>T_Announce. Note: IUT's MAC Address is Local Address |
| Directed_Beacon1 | FDDI_RMT/STUCK_-BEACONING/NO_DUP_ADD/Directed_Beacon1 | 151 | Verify that IUT transmits Directed Beacon frame when its MAC has Beaconed for longer than T_Stuck and there is no duplicate address on the ring. |

Continued on next page .....



Copyright International Organization for Standardization
Provided by IHS under license with ISO
No reproduction or networking permitted without license from IHS
Not for Resale

.....Continued from previous page.

| Test Case Identifier | Test Case Reference | Page | Description |
|---|---|---|---|
| Directed_Beacon2 | FDDI_RMT/STUCK_-BEACONING/DUP_ADD/Directed_Beacon2 | 152 | Verify that IUT transmits Directed Beacon frame when its MAC has Beaconed for longer than T_Stuck and there is a duplicate address on the ring. |
| Ring_Op | FDDI_RMT/REST_-DIALOG/Ring_Op | 155 | Verify that IUT terminates a Restricted Dialog that has persisted on the ring for longer than T_Rmode. Note: This test case is optional. |
| Ring_Op_Dup | FDDI_RMT/REST_-DIALOG/Ring_Op_Dup | 156 | Verify that IUT terminates a Restricted Dialog that has persisted on the ring for longer than T_Rmode and there is a duplicate address on the ring. Note: This Test case is optional. |
| Trace | FDDI_RMT/TRACE_-FUNCTION/Trace | 158 | Verify that IUT initiates the Trace function when its MAC has transmited Directed Beacon frames for longer than T_Direct. |
| INIT_RING | FDDI_RMT/LIBRARY/-INIT_RING | 159 | Initiate the ring. At the end of initialization, the second Token would have circulated back to the tester. |
| INIT_BID | FDDI_RMT/LIBRARY/-INIT_BID | 160 | To initiate the T_Bid. |
| DUP_ADD_DETECT | FDDI_RMT/LIBRARY/-DUP_ADD_DETECT | 161 | Force IUT to detect a duplicate address condition on the ring. |
| DUP_ADD_DETECT1 | FDDI_RMT/LIBRARY/-DUP_ADD_DETECT1 | 162 | Force IUT to detect a duplicate address condition on the ring. Note: IUT's MAC Address is Local Address. |
| DUP_ADD_DETECT2 | FDDI_RMT/LIBRARY/-DUP_ADD_DETECT2 | 163 | Force IUT to detect a duplicate address condition on the ring. Note: IUT's MAC Address is Universal Address. |
| JAM_A1 | FDDI_RMT/LIBRARY/-JAM_A1 | 164 | IUT blocks its MACinput and sources Jam Beacon frames. Note: IUT's MAC Address is Local Address. |
| JAM_A2 | FDDI_RMT/LIBRARY/-JAM_A2 | 165 | IUT blocks its MAC input and sources Jam Beacon frames. Note: IUT's MAC Address is Universal Address. |
| JAM_ACTION1 | FDDI_RMT/LIBRARY/-JAM_ACTION1 | 166 | Verify that IUT performs Jam_Action by blocking its MAC input and sourcing Jam Beacon frames. Note: IUT's MAC Address is Local Address. |

Continued on next page .....



Copyright International Organization for Standardization
Provided by IHS under license with ISO
No reproduction or networking permitted without license from IHS
Not for Resale

.....Continued from previous page.

| Test Step Identifier | Test Step Reference | Page | Description |
|---|---|---|---|
| JAM_ACTION2 | FDDI_RMT/LIBRARY/-JAM_ACTION2 | 167 | Verify that IUT performs Jam_Action by blocking its MAC input and sourcing Jam Beacon frames. Note: IUT's MAC Address is Universal Address. |
| JAM_B1 | FDDI_RMT/LIBRARY/-JAM_B1 | 168 | IUT initiates the Jam Beacon process twice while its MAC input is not blocked. Note: IUT's MAC Address is Local Address. |
| JAM_B2 | FDDI_RMT/LIBRARY/-JAM_B2 | 169 | IUT initiates the Jam Beacon process twice while its MAC input is not blocked. Note:IUT's MAC Address is Universal Address. |
| DBJ_ACTION1 | FDDI_RMT/LIBRARY/-DBJ_ACTION1 | 170 | Verify that IUT performs Double Beacon Jam Action by initiating the Jam Beacon process twice while its MAC input is not blocked. Note: IUT's MAC Address is Local Address. |
| DBJ_ACTION2 | FDDI_RMT/LIBRARY/-DBJ_ACTION2 | 171 | Verify that IUT performs Double Beacon Jam Action by initiating the Jam Beacon process twice while its MAC input is not blocked. Note: IUT's MAC Address is Universal Address. |
| CHANGE_ADD | FDDI_RMT/LIBRARY/-CHANGE_ADD | 172 | IUT changes its MAC Local Address to Universal Address. |
| CHANGE_MAC_ADD | FDDI_RMT/LIBRARY/-CHANGE_MAC_ADD | 172 | Verify that IUTchanges its MAC Local Address to Universal Address. |
| TX_D_BEACON | FDDI_RMT/LIBRARY/-TX_D_BEACON | 173 | Verify that IUT transmits Directed Beacon frames after its MAC has Beaconed for longer than T_Stuck. |
| **Default Identifier** | **Default Reference** | **Page** | **Description** |

## 8.2 User Type Definition

| User Type Definitions | | | |
|---|---|---|---|
| **Name** | **Base Type** | **Definition** | **Comments** |
| SYMBOL | | BITSTRING [5] | |

--`,,```,,,,````-`-`,,`,,`,`,,`---



Copyright International Organization for Standardization
Provided by IHS under license with ISO
No reproduction or networking permitted without license from IHS
Not for Resale

### 8.3 User Operation Definition

| User Operation Definition |
|---|
| **Operation Name** : TWOS_COM (NUM:INTEGER)<br>**Result Type** : INTEGER |
| **Description** |
| This operator will convert the integer NUM into two's complement format. |

| User Operation Definition |
|---|
| **Operation Name** : LINE_STATE_ILS<br>**Result Type** : BOOLEAN |
| **Description** |
| This operator is equal "true" when the current line state is Idle Line State, "false" otherwise. |

| User Operation Definition |
|---|
| **Operation Name** : SEC_LINE_STATE_MLS<br>**Result Type** : BOOLEAN |
| **Description** |
| This operator is equal "true" when the current line state on the secondary ring is Master Line State, "false" otherwise. |

| User Operation Definition |
|---|
| **Operation Name** : LINE_STATE_QLS<br>**Result Type** : BOOLEAN |
| **Description** |
| This operator is equal "true" when the current line state is Quiet Line State, "false" otherwise. |


--`,,```,,,,````-`-`,,`,,`,`,,`---
Copyright International Organization for Standardization
Provided by IHS under license with ISO
No reproduction or networking permitted without license from IHS
Not for Resale

## 8.4 Test Suite Parameters

| Test Suite Parameters | | | |
|---|---|---|---|
| **Name** | **Type** | **PICS/PIXIT Ref.** | **Comments** |
| IUT_ADDRESS | OCTETSTRING[6] | Annex A, 1.1 | 48_bit address assigned to IUT's MAC. MSB on the left. |
| IUT_L_ADD | OCTETSTRING[6] | Annex A, 1.2 | 48_bit Local Address assigned to IUT's MAC. MSB on the left. |
| IUT_U_ADD | OCTETSTRING[6] | Annex A, 1.3 | 48_bit Universal Address assigned to IUT's MAC. MSB on the left. |
| TESTER_ADDRESS | OCTETSTRING[6] | Annex A, 1.4 | 48_bit address assigned to Tester's MAC. MSB on the left. |
| OTHER_ADDRESS | OCTETSTRING[6] | Annex A, 1.5 | 48_bit address assigned to Other's MAC. MSB on the left. |
| T_REQ | INTEGER | Annex A, 4.1.1 | Value of TTRT on IUT's MAC (in usec). The upper bound of this value is T_Max_LB. |
| T_REQ1 | INTEGER | Annex A, 4.1.2 | Another value of TTRT on IUT's MAC (in usec). The upper bound of this value is T_Max_LB. |
| T_REQ2 | INTEGER | Annex A, 4.1.3 | Value of TTRT on Other's MAC (in usec). The upper bound of this value is T_Max_LB |
| T_Max | INTEGER | Annex A, 4.2 | Maximum TRT value (in usec). |
| T_Rmode_Value | INTEGER | Annex A, 4.3 | T_Rmode value (in sec) for restricted dialog on the ring. |

## 8.5 Test suite Constant

| Test Suite Constants | | | |
|---|---|---|---|
| **Name** | **Type** | **Value** | **Comments** |
| JK | SYMBOL[2] | '1100010001'B | J and K SYMBOLS. |
| TT | SYMBOL[2] | '0110101101'B | Token's ED. |
| T | SYMBOL | '01101'B | T SYMBOL. |
| M | INTEGER | '1000000'B | Factor of multiplication for timers. |
| DELTA | INTEGER | 1000 | Timer adjustment factor, in usec. |
| SET | SYMBOL | '11001'B | SET symbol. |
| RESET | SYMBOL | '00111'B | RESET symbol. |
| SMT_SRF_DA | OCTETSTRING[6] | '800143008008'H | SRF Multicast Address. |
| SMT_Directed_-Beacon_DA | OCTETSTRING[6] | '800143008000'H | SMT_Directed_Beacon Destination Address. |



Copyright International Organization for Standardization
Provided by IHS under license with ISO
No reproduction or networking permitted without license from IHS
Not for Resale

## 8.6 Test Suite Variables

| Test Suite Variables | | | |
|---|---|---|---|
| **Name** | **Type** | **Value** | **Comments** |
| T_NEG | INTEGER | | TRT value in unit of usec, after the Claim process. |
| HIGHER_T_BID | INTEGER | | Bid value higher than IUT's bid, in unit of 80 ns, in 2's complement. |
| LOWER_T_BID | INTEGER | | Bid value lower than IUT's bid, in unit of 80ns, in 2's complement. |
| IUT_T_BID | INTEGER | | IUT's bid, in unit of 80 ns in 2's complement. |
| DIFF_T_BID | INTEGER | | Another IUT's bid, in unit of 80ns in 2's complement. |
| OTHER_T_BID | INTEGER | | Other's bid, in unit of 80ns in 2's complement. |
| T1 | INTEGER | | Variable for temporary values. |

## 8.7 Timer Declarations

| Timer Declarations | | | |
|---|---|---|---|
| **Timer Name** | **Duration** | **Units** | **Comments** |
| D_Max | 1773 | us | Maximum Ring Latency time. |
| Twice_D_Max | 3546 | us | 2(D_Max). |
| Timer_TRM | T_Max | us | Ring Management Timer. A timer used by RMT to monitor the MAC operation. |
| T_Non_Op | 1 | sec | Time to allow ring recovery to occur before duplicate address conditions are examined. |
| RM_React | 83 | ms | Maximum time for the RMT state machine to recognize that transition conditions exist and to execute the appropriate transition. |
| T_Jam | 370 | ms | Time for which Jam Beacon is sent. |
| T_DBJ | 82 | ms | Time to start second Beacon of Double Beacon Jam after the first Beacon is sent. |
| T_Direct | 370 | ms | Time for which Directed Beacon is sent before the Trace function is invoked. |
| T_Stuck | 8 | sec | Time to allow a Stuck Beacon condition before a Directed Beacon is sent, followed shortly by the initiation of a Trace. |
| T_Rmode | T_Rmode_-Value | sec | Time for which a Restricted Dialog may persist on the ring before being terminated by this MAC. Default value is 0 sec. |
| T_Announce | 2500 | ms | Default time for intervals between sending Jam Beacons. |
| T_Limit | 2 | sec | The rate-limiting interval for Status Report Protocol. |
| Topr | 180 | sec | Operator Timer (in seconds). |


Copyright International Organization for Standardization
Provided by IHS under license with ISO
No reproduction or networking permitted without license from IHS
Not for Resale

## 8.8 PDU Type Declarations

### 8.8.1 PDU Declaration of Token

| PDU Type Declaration | | |
|---|---|---|
| **PDU Name:** TOKEN | **PCO Type:** | **Comments:** |
| **PDU Field Information** | | |
| **Field Name** | **Type** | **Comments** |
| SD | SYMBOL[1] | Start Delimiter |
| FC | OCTETSTRING[1] | Frame Control |
| ED | SYMBOL[2] | End Delimiter |

### 8.8.2 PDU Declaration of Claim

| PDU Type Declaration | | |
|---|---|---|
| **PDU Name:** CLAIM | **PCO Type:** | **Comments:** |
| **PDU Field Information** | | |
| **Field Name** | **Type** | **Comments** |
| SD | SYMBOL[2] | Start Delimiter |
| FC | OCTETSTRING[1] | Frame Control |
| DA | OCTETSTRING[6] | Destination Address |
| SA | OCTETSTRING[6] | Source Address |
| INFO | OCTETSTRING[1] | T_Bid Value |
| FCS | OCTETSTRING[4] | Frame Check Sequence |
| ED | SYMBOL[1] | End Delimiter |
| FS_E | SYMBOL[1] | Control Indicator E (Error) |
| FS_A | SYMBOL[1] | Control Indicator A (Address) |
| FS_C | SYMBOL[1] | Control Indicator C (Copy) |
| FS_2 | SYMBOL[0..4] | Additional Control Indicators |
| FS_T | SYMBOL[1] | Symbol T |

--`,,```,,,,````-`-`,,`,,`,`,,`---



Copyright International Organization for Standardization
Provided by IHS under license with ISO
No reproduction or networking permitted without license from IHS
Not for Resale

### 8.8.3 PDU Declaration of Beacon

| PDU Type Declaration | | |
|---|---|---|
| **PDU Name:** BEACON | **PCO Type:** | **Comments:** |
| **PDU Field Information** | | |
| **Field Name** | **Type** | **Comments** |
| SD | SYMBOL[2] | Start Delimiter |
| FC | OCTETSTRING[1] | Frame Control |
| DA | OCTETSTRING[6] | Destination Address |
| SA | OCTETSTRING[6] | Source Address |
| INFO1 | OCTETSTRING[1] | First byte of Info |
| INFO2 | OCTETSTRING[3] | Last three bytes of Info |
| FCS | OCTETSTRING[4] | Frame Check Sequence |
| ED | SYMBOL[1] | End Delimiter |
| FS_E | SYMBOL[1] | Control Indicator E (Error) |
| FS_A | SYMBOL[1] | Control Indicator A (Address) |
| FS_C | SYMBOL[1] | Control Indicator C (Copy) |
| FS_2 | SYMBOL[0..4] | Additional Control Indicators |
| FS_T | SYMBOL[1] | Symbol T |

### 8.8.4 PDU Declaration of Directed Beacon

| PDU Type Declaration | | |
|---|---|---|
| **PDU Name:** D_BEACON | **PCO Type:** | **Comments:** |
| **PDU Field Information** | | |
| **Field Name** | **Type** | **Comments** |
| SD | SYMBOL[2] | Start Delimiter |
| FC | OCTETSTRING[1] | Frame Control |
| DA | OCTETSTRING[6] | Destination Address |
| SA | OCTETSTRING[6] | Source Address |
| BEACON_INFO | GROUP | |
| FCS | OCTETSTRING[4] | Frame Check Sequence |
| ED | SYMBOL[1] | End Delimiter |
| FS_E | SYMBOL[1] | Control Indicator E (Error) |
| FS_A | SYMBOL[1] | Control Indicator A (Address) |
| FS_C | SYMBOL[1] | Control Indicator C (Copy) |
| FS_2 | SYMBOL[0..4] | Additional Control Indicators |
| FS_T | SYMBOL[1] | Symbol T |


Copyright International Organization for Standardization
Provided by IHS under license with ISO
No reproduction or networking permitted without license from IHS
Not for Resale

### 8.8.5 PDU Declaration of Jam Beacon

| PDU Type Declaration | | |
|---|---|---|
| **PDU Name:** J_BEACON | **PCO Type:** | **Comments:** |
| **PDU Field Information** | | |
| **Field Name** | **Type** | **Comments** |
| SD | SYMBOL[2] | Start Delimiter |
| FC | OCTETSTRING[1] | Frame Control |
| DA | OCTETSTRING[6] | Destination Address |
| SA | OCTETSTRING[6] | Source Address |
| BEACON_INFO | GROUP | |
| FCS | OCTETSTRING[4] | Frame Check Sequence |
| ED | SYMBOL[1] | End Delimiter |
| FS_E | SYMBOL[1] | Control Indicator E (Error) |
| FS_A | SYMBOL[1] | Control Indicator A (Address) |
| FS_C | SYMBOL[1] | Control Indicator C (Copy) |
| FS_2 | SYMBOL[0..4] | Additional Control Indicators |
| FS_T | SYMBOL[1] | Symbol T |

### 8.8.6 PDU Declaration of Status Report Frame

| PDU Type Declaration | | |
|---|---|---|
| **PDU Name:** SRF_FRAME | **PCO Type:** | **Comments:** |
| **PDU Field Information** | | |
| **Field Name** | **Type** | **Comments** |
| SD | SYMBOL[2] | Start Delimiter |
| FC | OCTETSTRING[1] | Frame Control |
| DA | OCTETSTRING[6] | Destination Address |
| SA | OCTETSTRING[6] | Source Address |
| INFO_SRF | GROUP | Text of SRF frame |
| FCS | OCTETSTRING[4] | Frame Check Sequence |
| ED | SYMBOL[1] | End Delimiter |
| FS_E | SYMBOL[1] | Control Indicator E (Error) |
| FS_A | SYMBOL[1] | Control Indicator A (Address) |
| FS_C | SYMBOL[1] | Control Indicator C (Copy) |
| FS_2 | SYMBOL[0..4] | Additional Control Indicators |
| FS_T | SYMBOL[1] | Symbol T |



Copyright International Organization for Standardization
Provided by IHS under license with ISO
No reproduction or networking permitted without license from IHS
Not for Resale

### 8.8.7 PDU Declaration of Neighbour Information Frame

| PDU Type Declaration | | |
|---|---|---|
| **PDU Name:** NIF_FRAME | **PCO Type:** | **Comments:** |
| **PDU Field Information** | | |
| **Field Name** | **Type** | **Comments** |
| SD | SYMBOL[2] | Start Delimiter |
| FC | OCTETSTRING[1] | Frame Control |
| DA | OCTETSTRING[6] | Destination Address |
| SA | OCTETSTRING[6] | Source Address |
| INFO_NIF | GROUP | Text of NIF frames |
| FCS | OCTETSTRING[4] | Frame Check Sequence |
| ED | SYMBOL[1] | End Delimiter |
| FS_E | SYMBOL[1] | Control Indicator E (Error) |
| FS_A | SYMBOL[1] | Control Indicator A (Address) |
| FS_C | SYMBOL[1] | Control Indicator C (Copy) |
| FS_2 | SYMBOL[0..4] | Additional Control Indicators |
| FS_T | SYMBOL[1] | Symbol T |

## 8.9 PDU Field Group Type Declarations

### 8.9.1 BEACON_INFO

| PDU Field Group Type Declaration | | |
|---|---|---|
| **Field Group Name:** BEACON_INFO | | **Comments:** |
| **PDU Field Information** | | |
| **Field Name** | **Type** | **Comments** |
| BEACON_TYPE | OCTETSTRING[1] | |
| PAD | OCTETSTRING[3] | |
| UNA | OCTETSTRING[6] | |


Copyright International Organization for Standardization
Provided by IHS under license with ISO
No reproduction or networking permitted without license from IHS
Not for Resale

### 8.9.2 INFO_SRF

| PDU Field Group Type Declaration | | |
|---|---|---|
| **Field Group Name:** INFO_SRF | **Comments:** | |
| **PDU Field Information** | | |
| **Field Name** | **Type** | **Comments** |
| FRAME_CLASS | OCTETSTRING[1] | SRF (Status Report Frame) |
| FRAME_TYPE | OCTETSTRING[1] | Announcement=01 |
| VERSION_ID | OCTETSTRING[2] | |
| TRANSACTION_ID | OCTETSTRING[4] | |
| STATION_ID1 | OCTETSTRING[2] | |
| STATION_ID2 | OCTETSTRING[6] | |
| PAD | OCTETSTRING[2] | |
| INFO_FIELD_LENGTH | OCTETSTRING[2] | |
| PARAMETER_TYPE1 | OCTETSTRING[2] | X'1033', fddiSMTTimeStamp |
| PARAMETER_LENGTH1 | OCTETSTRING[2] | |
| SRF_DATA1 | OCTETSTRING[8] | |
| PARAMETER_TYPE2 | OCTETSTRING[2] | X'1034', fddiSMTTransitionTimeStamp |
| PARAMETER_LENGTH2 | OCTETSTRING[2] | |
| SRF_DATA2 | OCTETSTRING[8] | |
| PARAMETER_TYPE3 | OCTETSTRING[2] | X'208C', fddiMACDuplicateAddressCondition |
| PARAMETER_LENGTH3 | OCTETSTRING[2] | |
| RESOURCE_INDEX | OCTETSTRING[4] | |
| PAD31 | OCTETSTRING[3] | |
| SRF_DATA31 | OCTETSTRING[1] | ConditionState: True=1;False=0 |
| PAD32 | OCTETSTRING[2] | |
| SRF_DATA32 | OCTETSTRING[2] | DupCondition: mydup='0000'H (DA_Flag=SET); unadup='0001'H (UNDA_Flag=SET) |
| SRF_DATA33 | OCTETSTRING[6] | My_Long_Address |
| SRF_DATA34 | OCTETSTRING[6] | UNA_Long_Address |



--`,,```,,,,````-`-`,,`,,`,`,,`---
Copyright International Organization for Standardization
Provided by IHS under license with ISO
No reproduction or networking permitted without license from IHS
Not for Resale

### 8.9.3 INFO_NIF

| PDU Field Group Type Declaration | | |
|---|---|---|
| **Field Group Name:** INFO_NIF | **Comments:** | |
| **PDU Field Information** | | |
| **Field Name** | **Type** | **Comments** |
| FRAME_CLASS | OCTETSTRING[1] | NIF (Neighbor Information Frame) |
| FRAME_TYPE | OCTETSTRING[1] | Ann=01, Req=02, Resp=03 |
| VERSION_ID | OCTETSTRING[2] | |
| TRANSACTION_ID | OCTETSTRING[4] | |
| STATION_ID1 | OCTETSTRING[2] | |
| STATION_ID2 | OCTETSTRING[6] | |
| PAD | OCTETSTRING[2] | |
| INFO_FIELD_LENGTH | OCTETSTRING[2] | |
| PARAMETER_TYPE | OCTETSTRING[2] | X'0001', Upstream Neighbor Address (UNA) |
| PARAMETER_LENGTH | OCTETSTRING[2] | |
| NIF_DATA1 | OCTETSTRING[2] | |
| NIF DATA2 | OCTETSTRING[0..32] | |

## 8.10 PDU Constraint Declarations

### 8.10.1 PDU Constraint Declaration of Unrestricted Token

| PDU Constraint Declaration | |
|---|---|
| **PDU Name:** TOKEN | **Constraint Name:** TOKEN_UR |
| **Field Name** | **Value** |
| SD | JK |
| FC | '80'H |
| ED | TT |
| **Comments:** | |

### 8.10.2 PDU Constraint Declaration of Restricted Token

| PDU Constraint Declaration | |
|---|---|
| **PDU Name:** TOKEN | **Constraint Name:** TOKEN_R |
| **Field Name** | **Value** |
| SD | JK |
| FC | 'C0'H |
| ED | TT |
| **Comments:** | |


Copyright International Organization for Standardization
Provided by IHS under license with ISO
No reproduction or networking permitted without license from IHS
Not for Resale

### 8.10.3 PDU Constraint Declaration of IUT's Claim

| PDU Constraint Declaration | |
|---|---|
| **PDU Name:** CLAIM | **Constraint Name:** CLAIM_IUT(BID: integer) |
| **Field Name** | **Value** |
| SD | JK |
| FC | 'C3'H |
| DA | IUT_ADDRESS |
| SA | IUT_ADDRESS |
| INFO | BID |
| FCS | ? |
| ED | T |
| FS_E | RESET |
| FS_A | RESET |
| FS_C | RESET |
| FS_2 | - |
| FS_T | T |
| **Comments:** IUT Claim frame, BID contains the Value of T_Req. | |

### 8.10.4 PDU Constraint Declaration of IUT's Claim Using Local Address

| PDU Constraint Declaration | |
|---|---|
| **PDU Name:** CLAIM | **Constraint Name:** CLAIM_IUT1(BID: integer) |
| **Field Name** | **Value** |
| SD | JK |
| FC | 'C3'H |
| DA | IUT_L_ADD |
| SA | IUT_L_ADD |
| INFO | BID |
| FCS | ? |
| ED | T |
| FS_E | RESET |
| FS_A | RESET |
| FS_C | RESET |
| FS_2 | - |
| FS_T | T |
| **Comments:** IUT Claim frame, BID contains the Value of T_Req. | |

--`,,```,,,,````-`-`,,`,,`,`,,`---



Copyright International Organization for Standardization
Provided by IHS under license with ISO
No reproduction or networking permitted without license from IHS
Not for Resale

### 8.10.5 PDU Constraint Declaration of IUT's Claim Using Universal Address

| **PDU Constraint Declaration** | |
|---|---|
| **PDU Name:** CLAIM | **Constraint Name:** CLAIM_IUT2(BID: integer) |
| **Field Name** | **Value** |
| SD | JK |
| FC | 'C3'H |
| DA | IUT_U_ADD |
| SA | IUT_U_ADD |
| INFO | BID |
| FCS | ? |
| ED | T |
| FS_E | RESET |
| FS_A | RESET |
| FS_C | RESET |
| FS_2 | - |
| FS_T | T |
| **Comments:** UT Claim frame, BID contains the Value of T_Req. | |

### 8.10.6 PDU Constraint Declaration of Tester's Claim

| **PDU Constraint Declaration** | |
|---|---|
| **PDU Name:** CLAIM | **Constraint Name:** CLAIM_TESTER(BID: integer) |
| **Field Name** | **Value** |
| SD | JK |
| FC | 'C3'H |
| DA | TESTER_ADDRESS |
| SA | TESTER_ADDRESS |
| INFO | BID |
| FCS | ? |
| ED | T |
| FS_E | RESET |
| FS_A | RESET |
| FS_C | RESET |
| FS_2 | - |
| FS_T | T |
| **Comments:** Tester Claim frame, BID contains the Value of T_Req. | |


Copyright International Organization for Standardization
Provided by IHS under license with ISO
No reproduction or networking permitted without license from IHS
Not for Resale

### 8.10.7 PDU Constraint Declaration of Other Claim

| PDU Constraint Declaration | |
|---|---|
| **PDU Name:** CLAIM | **Constraint Name:** CLAIM_OTHER(BID: integer) |
| **Field Name** | **Value** |
| SD | JK |
| FC | 'C3'H |
| DA | OTHER_ADDRESS |
| SA | OTHER_ADDRESS |
| INFO | BID |
| FCS | ? |
| ED | T |
| FS_E | RESET |
| FS_A | RESET |
| FS_C | RESET |
| FS_2 | - |
| FS_T | T |
| **Comments:** Other Claim frame, BID contains the Value of T_Req. | |

### 8.10.8 PDU Constraint Declaration of Stripped Claim

| PDU Constraint Declaration | |
|---|---|
| **PDU Name:** CLAIM | **Constraint Name:** CLAIM_STRIP |
| **Field Name** | **Value** |
| SD | JK |
| FC | 'C3'H |
| DA | IUT_L_ADD |
| SA | IUT_L_ADD |
| INFO | - |
| FCS | - |
| ED | - |
| FS_E | - |
| FS_A | - |
| FS_C | - |
| FS_2 | - |
| FS_T | - |
| **Comments:** | |



Copyright International Organization for Standardization
Provided by IHS under license with ISO
No reproduction or networking permitted without license from IHS
Not for Resale

### 8.10.9 PDU Constraint Declaration of IUT's Beacon

| PDU Constraint Declaration | |
|---|---|
| **PDU Name:** BEACON | **Constraint Name:** BEACON_IUT |
| **Field Name** | **Value** |
| SD | JK |
| FC | 'C2'H |
| DA | '000000000000'H |
| SA | IUT_ADDRESS |
| INFO1 | '00'H |
| INFO2 | '000000'H |
| FCS | ? |
| ED | T |
| FS_E | RESET |
| FS_A | RESET |
| FS_C | RESET |
| FS_2 | - |
| FS_T | T |
| **Comments:** | |

### 8.10.10 PDU Constraint Declaration of IUT's Beacon Using Local Address

| PDU Constraint Declaration | |
|---|---|
| **PDU Name:** BEACON | **Constraint Name:** BEACON_IUT1 |
| **Field Name** | **Value** |
| SD | JK |
| FC | 'C2'H |
| DA | '000000000000'H |
| SA | IUT_L_ADD |
| INFO1 | '00'H |
| INFO2 | '000000'H |
| FCS | ? |
| ED | T |
| FS_E | RESET |
| FS_A | RESET |
| FS_C | RESET |
| FS_2 | - |
| FS_T | T |
| **Comments:** | |


Copyright International Organization for Standardization
Provided by IHS under license with ISO
No reproduction or networking permitted without license from IHS
Not for Resale

### 8.10.11 PDU Constraint Declaration of IUT's Beacon Using Universal Address

| PDU Constraint Declaration | |
|---|---|
| **PDU Name:** BEACON | **Constraint Name:** BEACON_IUT2 |
| **Field Name** | **Value** |
| SD | JK |
| FC | 'C2'H |
| DA | '000000000000'H |
| SA | IUT_U_ADD |
| INFO1 | '00'H |
| INFO2 | '0000'H |
| FCS | ? |
| ED | T |
| FS_E | RESET |
| FS_A | RESET |
| FS_C | RESET |
| FS_2 | - |
| FS_T | T |
| **Comments:** | |

### 8.10.12 PDU Constraint Declaration of Tester's Beacon

| PDU Constraint Declaration | |
|---|---|
| **PDU Name:** BEACON | **Constraint Name:** BEACON_TESTER |
| **Field Name** | **Value** |
| SD | JK |
| FC | 'C2'H |
| DA | '000000000000'H |
| SA | TESTER_ADDRESS |
| INFO1 | '00'H |
| INFO2 | '000000'H |
| FCS | ? |
| ED | T |
| FS_E | RESET |
| FS_A | RESET |
| FS_C | RESET |
| FS_2 | - |
| FS_T | T |
| **Comments:** | |



Copyright International Organization for Standardization
Provided by IHS under license with ISO
No reproduction or networking permitted without license from IHS
Not for Resale

### 8.10.13 PDU Constraint Declaration of Stripped Beacon

| PDU Constraint Declaration | |
|---|---|
| **PDU Name:** BEACON | **Constraint Name:** BEACON_STRIP |
| **Field Name** | **Value** |
| SD | JK |
| FC | 'C2'H |
| DA | '000000000000'H |
| SA | IUT_L_ADD |
| INFO1 | - |
| INFO2 | - |
| FCS | - |
| ED | - |
| FS_E | - |
| FS_A | - |
| FS_C | - |
| FS_2 | - |
| FS_T | - |
| **Comments:** | |

### 8.10.14 PDU Constraint Declaration of IUT's Directed Beacon

| PDU Constraint Declaration | |
|---|---|
| **PDU Name:** D_BEACON | **Constraint Name:** D_BEACON_IUT |
| **Field Name** | **Value** |
| SD | JK |
| FC | 'C2'H |
| DA | SMT_Directed_Beacon_DA |
| SA | IUT_ADDRESS |
| BEACON_INFO | DIRECTED_INFO |
| FCS | ? |
| ED | T |
| FS_E | RESET |
| FS_A | RESET |
| FS_C | RESET |
| FS_2 | - |
| FS_T | T |
| **Comments:** | |


Copyright International Organization for Standardization
Provided by IHS under license with ISO
No reproduction or networking permitted without license from IHS
Not for Resale

### 8.10.15 PDU Constraint Declaration of IUT's Directed Beacon Using Universal Address

| PDU Constraint Declaration | |
|---|---|
| **PDU Name:** D_BEACON | **Constraint Name:** D_BEACON_IUT2 |
| **Field Name** | **Value** |
| SD | JK |
| FC | 'C2'H |
| DA | SMT_Directed_Beacon_DA |
| SA | IUT_U_ADD |
| BEACON_INFO | DIRECTED_INFO |
| FCS | ? |
| ED | T |
| FS_E | RESET |
| FS_A | RESET |
| FS_C | RESET |
| FS_2 | - |
| FS_T | T |
| **Comments:** | |

### 8.10.16 PDU Constraint Declaration of IUT's Directed Beacon Using Local Address

| PDU Constraint Declaration | |
|---|---|
| **PDU Name:** J_BEACON | **Constraint Name:** J_BEACON_IUT1 |
| **Field Name** | **Value** |
| SD | JK |
| FC | 'C2'H |
| DA | IUT_L_ADD |
| SA | IUT_L_ADD |
| BEACON_INFO | JAM_INFO |
| FCS | ? |
| ED | T |
| FS_E | RESET |
| FS_A | RESET |
| FS_C | RESET |
| FS_2 | - |
| FS_T | T |
| **Comments:** | |



--`,,```,,,,````-`-`,,`,,`,`,,`---
Copyright International Organization for Standardization
Provided by IHS under license with ISO
No reproduction or networking permitted without license from IHS
Not for Resale

### 8.10.17 PDU Constraint Declaration of IUT's Jammed Beacon Using Universal Address

| PDU Constraint Declaration | |
|---|---|
| **PDU Name:** J_BEACON | **Constraint Name:** J_BEACON_IUT2 |
| **Field Name** | **Value** |
| SD | JK |
| FC | 'C2'H |
| DA | IUT_U_ADD |
| SA | IUT_U_ADD |
| BEACON_INFO | JAM_INFO |
| FCS | ? |
| ED | T |
| FS_E | RESET |
| FS_A | RESET |
| FS_C | RESET |
| FS_2 | - |
| FS_T | T |
| **Comments:** | |

### 8.10.18 PDU Constraint Declaration of IUT's Status Report Frame

| PDU Constraint Declaration | |
|---|---|
| **PDU Name:** SRF_FRAME | **Constraint Name:** SRF_ANN |
| **Field Name** | **Value** |
| SD | JK |
| FC | '41'H |
| DA | SMT_SRF_DA |
| SA | IUT_ADDRESS |
| INFO_SRF | INFO_SRF_ANN |
| FCS | ? |
| ED | T |
| FS_E | RESET |
| FS_A | RESET |
| FS_C | RESET |
| FS_2 | - |
| FS_T | T |
| **Comments:** | |



Copyright International Organization for Standardization
Provided by IHS under license with ISO
No reproduction or networking permitted without license from IHS
Not for Resale

### 8.10.19 PDU Constraint Declaration of IUT's NIF Request Frame

| PDU Constraint Declaration | |
|---|---|
| **PDU Name:** NIF_FRAME | **Constraint Name:** NIF_REQ |
| **Field Name** | **Value** |
| SD | JK |
| FC | '4F'H |
| DA | 'FFFFFFFFFFFF'H |
| SA | IUT_ADDRESS |
| INFO_NIF | INFO_NIF_REQ |
| FCS | ? |
| ED | T |
| FS_E | RESET |
| FS_A | RESET |
| FS_C | RESET |
| FS_2 | - |
| FS_T | T |
| **Comments:** | |

### 8.10.20 PDU Constraint Declaration of IUT's NIF Response Frame

| PDU Constraint Declaration | |
|---|---|
| **PDU Name:** NIF_FRAME | **Constraint Name:** NIF_RESP |
| **Field Name** | **Value** |
| SD | JK |
| FC | '41'H |
| DA | IUT_ADDRESS |
| SA | TESTER_ADDRESS |
| INFO_NIF | INFO_NIF_RESP |
| FCS | ? |
| ED | T |
| FS_E | RESET |
| FS_A | SET |
| FS_C | RESET |
| FS_2 | - |
| FS_T | T |
| **Comments:** | |



--`,,```,,,,````-`-`,,`,,`,`,,`---
Copyright International Organization for Standardization
Provided by IHS under license with ISO
No reproduction or networking permitted without license from IHS
Not for Resale

## 8.11 PDU Field Group Constraint Declarations

### 8.11.1 PDU Field Group Constraint Declaration of Directed BEACON_INFO

| **PDU Field Group Constraint Declaration** | |
|---|---|
| **Field Group Name:** BEACON_INFO | **Constraint Name:** DIRECTED_INFO |
| **Field Name** | **Value** |
| BEACON_TYPE<br>PAD<br>UNA | ‘01'H<br>‘000000'H<br>? |
| **Comments:** | |

### 8.11.2 PDU Field Group Constraint Declaration of Jammed BEACON_INFO

| **PDU Field Group Constraint Declaration** | |
|---|---|
| **Field Group Name:** BEACON_INFO | **Constraint Name:** JAM_INFO |
| **Field Name** | **Value** |
| BEACON_TYPE<br>PAD<br>UNA | ‘02'H<br>‘000000'H<br>? |
| **Comments:** | |


Copyright International Organization for Standardization
Provided by IHS under license with ISO
No reproduction or networking permitted without license from IHS
Not for Resale

### 8.11.3 PDU Field Group Constraint Declaration of SRF_INFO

| PDU Field Group Constraint Declaration | |
|---|---|
| **Field Group Name:** INFO_SRF | **Constraint Name:** INFO_SRF_ANN |
| **Field Name** | **Value** |
| FRAME_CLASS | '07'H |
| FRAME_TYPE | '01'H |
| VERSION_ID | '0002'H |
| TRANSACTION_ID | '00000002'H |
| STATION_ID1 | 0000'H |
| STATION_ID2 | IUT_ADDRESS |
| PAD | 0000'H |
| INFO_FIELD_LENGTH | ‘0034'H |
| PARAMETER_TYPE1 | ‘1033'H |
| PARAMETER_LENGTH1 | ‘0008'H |
| SRF_DATA1 | ? |
| PARAMETER_TYPE2 | ‘1034'H |
| PARAMETER_LENGTH2 | ‘0008'H |
| SRF_DATA2 | ? |
| PARAMETER_TYPE3 | ‘208C'H |
| PARAMETER_LENGTH3 | ‘0018'H |
| RESOURCE_INDEX | ? |
| PAD31 | ‘000000'H |
| SRF_DATA31 | ‘01'H |
| PAD32 | ‘0000'H |
| SRF_DATA32 | ‘0000'H |
| SRF_DATA33 | IUT_ADDRESS |
| SRF_DATA34 | ? |
| **Comments:** | |



Copyright International Organization for Standardization
Provided by IHS under license with ISO
No reproduction or networking permitted without license from IHS
Not for Resale

### 8.11.4 PDU Field Group Constraint Declaration of Requested NIF_INFO

| PDU Field Group Constraint Declaration | |
|---|---|
| **Field Group Name:** INFO_NIF | **Constraint Name:** INFO_NIF_REQ |
| **Field Name** | **Value** |
| FRAME_CLASS | ‘01'H |
| FRAME_TYPE | ‘02'H |
| VERSION_ID | ‘0001'H |
| TRANSACTION_ID | ‘00000001'H |
| STATION_ID1 | ‘0000'H |
| STATION_ID2 | IUT_ADDRESS |
| PAD | ‘0000'H |
| INFO_FIELD_LENGTH | ‘000C'H |
| PARAMETER_TYPE | ‘0001'H |
| PARAMETER_LENGTH | ‘0008'H |
| NIF_DATA1 | ‘0000'H |
| NIF_DATA2 | IUT_ADDRESS[6] |
| **Comments:** | |

### 8.11.5 PDU Field Group Constraint Declaration of Responded NIF_INFO

| PDU Field Group Constraint Declaration | |
|---|---|
| **Field Group Name:** INFO_NIF | **Constraint Name:** INFO_NIF_RESP |
| **Field Name** | **Value** |
| FRAME_CLASS | ‘01'H |
| FRAME_TYPE | ‘03'H |
| VERSION_ID | ‘0001'H |
| TRANSACTION_ID | ‘00000001'H |
| STATION_ID1 | ‘0000'H |
| STATION_ID2 | TESTER_ADDRESS |
| PAD | ‘0000'H |
| INFO_FIELD_LENGTH | ‘000C'H |
| PARAMETER_TYPE | ‘0001'H |
| PARAMETER_LENGTH | ‘0008'H |
| NIF_DATA1 | ‘0000'H |
| NIF_DATA2 | IUT_ADDRESS[6] |
| **Comments:** | |


Copyright International Organization for Standardization
Provided by IHS under license with ISO
No reproduction or networking permitted without license from IHS
Not for Resale

## 8.12 Test Case Dynamic Behavior

### 8.12.1 My_Claim1

**Test Case Dynamic Behavior**

**Reference** : FDDI_RMT/DUP_ADD_RESOL/TX_TOKEN/My_Claim1
**Identifier** : My_Claim1
**Purpose** : Verify that IUT resolves a duplicate address condition on the ring when it receives its own Claim frame with Local Address after not Claiming or Beaconing for longer than 2(D_Max).
**Default** :

| Behavior Description | Label | Constraints Reference | V | Comments |
|---|---|---|---|---|
| +DUP_ADD_DETECT1 | | | | (1) |
| !BEACON START D_Max | | BEACON_IUT1 | | |
| ?CLAIM | L0 | CLAIM_IUT1(IUT_T_BID) | | (2) |
| !CLAIM START D_Max | | CLAIM_IUT1(IUT_T_BID) | | |
| ?TOKEN | L1 | TOKEN_UR | | (3) |
| START Twice_D_Max | | | | |
| !TOKEN | L2 | TOKEN_UR | | |
| ?TOKEN | | TOKEN_UR | | |
| GOTO L2 | | | | |
| ?TIMEOUT Twice_D_Max | | | | (4) |
| !CLAIM (T_NEG:=T_REQ) | L3 | CLAIM_IUT1(IUT_T_BID) | | (5) |
| !CLAIM (T_NEG:=T_REQ2) | | CLAIM_OTHER(OTHER_T_BID) | | (6) |
| START RM_React | | | | |
| ?CLAIM | | CLAIM_STRIP | (P) | (7) |
| +CHANGE_MAC_ADD | | | | (8) |
| ?CLAIM | | CLAIM_OTHER(OTHER_T_BID) | (P) | (9) |
| +JAM_ACTION1 | | | | (10) |
| +DBJ_ACTION1 | | | | (11) |
| [LINE_STATE_QLS=TRUE] | | | P | (12) |
| ?TOKEN | | TOKEN_UR | | |
| GOTO L3 | | | | |
| ?OTHERWISE | | | F | |
| ?TIMEOUT RM_React | | | F | |
| ?OTHERWISE | | | F | |
| ?CLAIM | | CLAIM_IUT1(IUT_T_BID) | | |
| !CLAIM | | CLAIM_IUT1(IUT_T_BID) | | |
| GOTO L1 | | | | |
| ?OTHERWISE | | | F | |
| ?TIMEOUT D_Max | | | F | |
| ?BEACON | | BEACON_IUT1 | | |
| !BEACON | | BEACON_IUT1 | | |
| GOTO L0 | | | | |

Continued on next page .....



Copyright International Organization for Standardization
Provided by IHS under license with ISO
No reproduction or networking permitted without license from IHS
Not for Resale

.....Continued from previous page.

| Behavior Description | Label | Constraints Reference | V | Comments |
|---|---|---|---|---|
| ?OTHERWISE | | | F | |
| ?TIMEOUT D_Max | | | F | |

**Extended Comments:**

(1) IUT starts to detect a duplicate address condition on the ring.
(2) IUT's MAC is in the Claim process.
(3) IUT's MAC transmits a Token.
(4) 2(D_Max) expires. IUT's MAC has transmitted Token for 2(D_Max).
(5) IUT receives its own Claim frame with Local Address after not Claiming or Beaconing for longer than 2(D_Max).
(6) IUT receives other Claim frame with nonzero address not detected as duplicate and T_Req<=T_Max_LB.
(7) IUT scrubs its own Claim frame using its Local Address.
(8) IUT changes its Local Address to UniversalAddress.
(9) IUT configures its MAC to yield in the Claim process to the other MAC.
(10) IUT performs Jam Action.
(11) IUT performs Double Jam Beacon Action.
(12) IUT disconnects the signal (removes its MAC from the ring).

RM(34a)



Copyright International Organization for Standardization
Provided by IHS under license with ISO
No reproduction or networking permitted without license from IHS
Not for Resale

### 8.12.2 My_Claim2

| Test Case Dynamic Behavior | | | | |
|---|---|---|---|---|
| **Reference** : FDDI_RMT/DUP_ADD_RESOL/BEACONING/My_Claim2<br>**Identifier** : My_Claim2<br>**Purpose** : Verify that IUT resolves a duplicate address condition on the ring when it receives its own Claim frame with Local Address while Beaconing for longer than 2(D_Max).<br>**Default** : | | | | |
| **Behavior Description** | **Label** | **Constraints Reference** | **V** | **Comments** |
| +DUP_ADD_DETECT1 | | | | (1) |
| START Twice_D_Max | | | | |
| ?BEACON | L0 | BEACON_IUT1 | | (2) |
| GOTO L0 | | | | |
| ?TIMEOUT Twice_D_Max | | | | (3) |
| !CLAIM(T_NEG:=T_REQ) | L1 | CLAIM_IUT1(IUT_T_BID) | | (4) |
| !CLAIM(T_NEG:=T_REQ2) | | CLAIM_OTHER(OTHER_T_BID) | | (5) |
| START RM_React | | | | |
| ?CLAIM | | CLAIM_STRIP | (P) | (6) |
| +CHANGE_MAC_ADD | | | | (7) |
| ?CLAIM | | CLAIM_OTHER(OTHER_T_BID) | (P) | (8) |
| +JAM_ACTION1 | | | | (9) |
| +DBJ_ACTION1 | | | | (10) |
| [LINE_STATE_QLS=TRUE] | | | P | (11) |
| ?BEACON | | BEACON_IUT1 | | |
| GOTO L1 | | | | |
| ?OTHERWISE | | | F | |
| ?TIMEOUT RM_React | | | F | |
| ?OTHERWISE | | | F | |

**Extended Comments:**

(1) IUT starts to detect a duplicate address condition on the ring.
(2) IUT's MAC is in the Beacon process.
(3) 2(D_Max) expires. IUT's MAC has been Beaconing for 2(D_Max).
(4) IUT receives its own Claim frame with Local Address while Beaconing for longer than 2(D_Max).
(5) IUT receives other Claim frame with nonzero address not detected as duplicate and T_Req<=T_Max_LB.
(6) IUT scrubs its own Claim frame using its Local Address.
(7) IUT changes its MAC Local Address to Universal Address.
(8) IUT configures its MAC to yield in the Claim process to the other MAC.
(9) IUT performs Jam Action.
(10) IUT performs Double Beacon Jam Action.
(11) IUT disconnects the signal (removes its MAC from the ring).

RM(34a)



Copyright International Organization for Standardization
Provided by IHS under license with ISO
No reproduction or networking permitted without license from IHS
Not for Resale

### 8.12.3 My_Beacon

**Test Case Dynamic Behavior**

**Reference** : FDDI_RMT/DUP_ADD_RESOL/My_Beacon
**Identifier** : My_Beacon
**Purpose** : Verify that IUT resolves a duplicate address condition on the ring when it receives its own Beacon frame with Local Address while Claiming for longer than 2(D_Max).
**Default** :

| Behavior Description | Label | Constraints Reference | V | Comments |
|---|---|---|---|---|
| +DUP_ADD_DETECT1 | | | | (1) |
| !BEACON | | BEACON_IUT1 | | (2) |
| START D_Max | | | | |
| ?CLAIM | L0 | CLAIM_IUT1(IUT_T_BID) | | (3) |
| START Twice_D_Max | | | | |
| !CLAIM(T_NEG:=T_REQ+DELTA) | L1 | CLAIM_TESTER(LOWER_T_BID) | | |
| ?CLAIM | | CLAIM_IUT1(IUT_T_BID) | | |
| GOTO L1 | | | | |
| ?TIMEOUT Twice_D_Max | | | | (4) |
| !BEACON | L2 | BEACON_IUT1 | | (5) |
| !CLAIM(T_NEG:=T_REQ2) | | CLAIM_OTHER(OTHER_T_BID) | | (6) |
| START RM_React | | | | |
| ?BEACON | | BEACON_STRIP | (P) | (7) |
| +CHANGE_MAC_ADD | | | | (8) |
| ?CLAIM | | CLAIM_OTHER(OTHER_T_BID) | (P) | (9) |
| +JAM_ACTION1 | | | | (10) |
| +DBJ_ACTION1 | | | | (11) |
| [LINE_STATE_QLS=TRUE] | | | P | (12) |
| ?CLAIM | | CLAIM_IUT1(IUT_T_BID) | | |
| GOTO L2 | | | | |
| ?OTHERWISE | | | F | |
| ?TIMEOUT RM_React | | | F | |
| ?OTHERWISE | | | F | |
| ?BEACON | | BEACON_IUT1 | | |
| !BEACON | | BEACON_IUT1 | | |
| GOTO L0 | | | | |
| ?OTHERWISE | | | F | |
| ?TIMEOUT D_Max | | | F | |

**Extended Comments:**

(1) IUT starts to detect a duplicate address condition on the ring.
(2) Force IUT's MAC to enter the Claim process.
(3) IUT's MAC is in the Claim process.
(4) 2(D_Max) expires. IUT's MAC has Claimed for 2(D_Max).
(5) IUT receives its own Beacon frame with Local Address while Claiming for longer than 2(D_Max).
(6) IUT receives other Claim frame with nonzero address not detected as duplicate and T_Req<=T_Max_LB.
(7) IUT scrubs its own Claim frame using its Local Address.
(8) IUT changes its MAC Local Address to Universal Address.
(9) IUT configures its MAC to yield in the Claim process to the other MAC.
(10) IUT performs Jam Action.
(11) IUT performs Double Beacon Jam Action.
(12) IUT disconnects the signal (removes its MAC from the ring).

RM(34b)


Copyright International Organization for Standardization
Provided by IHS under license with ISO
No reproduction or networking permitted without license from IHS
Not for Resale

### 8.12.4 My_Claim_Diff_T_Bid

**Test Case Dynamic Behavior**

**Reference** : FDDI_RMT/DUP_ADD_RESOL/My_Claim_Diff_T_Bid
**Identifier** : My_Claim_Diff_T_Bid
**Purpose** : Verify that IUT resolves a duplicate address condition on the ring when it receives its own Claim frame with Universal Address and T_Bid<>T_Req and the time since T_Req changes is greater than 2(D_Max).
**Default** :

| Behavior Description | Label | Constraints Reference | V | Comments |
|---|---|---|---|---|
| +DUP_ADD_DETECT2 | | | | (1) |
| !BEACON | | BEACON_IUT2 | | (2) |
| START D_Max | | | | |
| ?CLAIM | L0 | CLAIM_IUT2(IUT_T_BID) | | (3) |
| START Twice_D_Max | | | | |
| !CLAIM(T_NEG:=T_REQ+DELTA) | L1 | CLAIM_TESTER(LOWER_T_BID) | | |
| ?CLAIM | | CLAIM_IUT2(IUT_T_BID) | | |
| GOTO L1 | | | | |
| ?TIMEOUT Twice_D_Max | | | | (4) |
| !CLAIM(T_NEG:=T_REQ1) | L2 | CLAIM_IUT2(DIFF_T_BID) | | (5) |
| !CLAIM(T_NEG:=T_REQ2) | | CLAIM_OTHER(OTHER_T_BID) | | (6) |
| START RM_React | | | | |
| ?CLAIM | | CLAIM_OTHER(OTHER_T_BID) | (P) | (7) |
| +JAM_ACTION2 | | | | (8) |
| +DBJ_ACTION2 | | | | (9) |
| [LINE_STATE_QLS=TRUE] | | | P | (10) |
| ?CLAIM | | CLAIM_IUT2(IUT_T_BID) | | |
| GOTO L2 | | | | |
| ?OTHERWISE | | | F | |
| ?TIMEOUT RM_React | | | F | |
| ?OTHERWISE | | | F | |
| ?BEACON | | BEACON_IUT2 | | |
| !BEACON | | BEACON_IUT2 | | |
| GOTO L0 | | | | |
| ?OTHERWISE | | | F | |
| ?TIMEOUT D_Max | | | F | |

**Extended Comments:**

(1) IUT starts to detect a duplicate address condition on the ring.
(2) Force IUT's MAC to enter the Claim process.
(3) IUT's MAC is in the Claim process.
(4) 2(D_Max) expires. IUT's MAC has Claimed for 2(D_Max).
(5) IUT receives its own Claim frame with T_Bid<>T_Req and the time since T_Req changes is greater than 2(D_Max).
(6) IUT receives other Claim frame with nonzero address not detected as duplicate and T_Req<=T_Max_LB.
(7) IUT configures its MAC to yield in the Claim process to the other MAC.
(8) IUT performs Jam Action.
(9) IUT performs Double Beacon Jam Action.
(10) IUT disconnects the signal (removes its MAC from the ring).

RM(34c)



Copyright International Organization for Standardization
Provided by IHS under license with ISO
No reproduction or networking permitted without license from IHS
Not for Resale

### 8.12.5 T_Ann

| Test Case Dynamic Behavior | | | | |
|---|---|---|---|---|
| **Reference** : FDDI_RMT/DUP_ADD_RESOL/T_Ann<br>**Identifier** : T_Ann<br>**Purpose** : Verify that IUT resolves a duplicate address condition on the ring when TRM>T_Announce. Note: IUT's MAC Address is Local Address.<br>**Default** : | | | | |
| **Behavior Description** | **Label** | **Constraints Reference** | **V** | **Comments** |
| +DUP_ADD_DETECT1 | | | | (1) |
| !BEACON | | BEACON_IUT1 | | (2) |
| START D_Max | | | | |
| ?CLAIM | L0 | CLAIM_IUT1(IUT_T_BID) | | (3) |
| START Twice_D_Max | | | | |
| !CLAIM(T_NEG:=T_REQ+DELTA) | L1 | CLAIM_TESTER(LOWER_T_BID) | | |
| ?CLAIM | | CLAIM_IUT1(IUT_T_BID) | | |
| GOTO L1 | | | | |
| ?TIMEOUT Twice_D_Max | | | | (4) |
| !BEACON | L2 | BEACON_IUT1 | | (5) |
| !CLAIM(T_NEG:=T_REQ2) | | CLAIM_OTHER(OTHER_T_BID) | | (6) |
| START RM_React | | | | |
| ?BEACON | | BEACON_STRIP | | (7) |
| +CHANGE_ADD | | | | (8) |
| START T_Announce | | | | |
| ?TIMEOUT T_Announce | L3 | | | (9) |
| !BEACON | | BEACON_IUT1 | | (5) |
| | | CLAIM_OTHER(OTHER_T_BID) | | (6) |
| !CLAIM(T_NEG:=T_REQ2) | | | | |
| START RM_React | | | | |
| ?BEACON | | BEACON_STRIP | (P) | (7) |
| | | | | (8) |
| +CHANGE_MAC_ADD | | | | |
| ?CLAIM | | CLAIM_OTHER(OTHER_T_BID) | (P) | (10) |
| | | | | (11) |
| +JAM_ACTION1 | | | | |
| | | | | (12) |
| +DBJ_ACTION1 | | | | |
| | | | P | (13) |
| [LINE_STATE_QLS=TRUE] | | | | |
| ?OTHERWISE | | | F | |
| ?TIMEOUT | | | F | |
| RM_React | | | | |
| ?CLAIM | | CLAIM_OTHER(OTHER_T_BID) | | (10) |
| +JAM_A1 | | | | (11) |
| START T_Announce | | | | |
| ?TIMEOUT T_Announce | L4 | | | (9) |
| START RM_React | | | | |
| [LINE_STATE_ILS=TRUE] | | | | |
| GOTO L4 | | | | |
| +JAM_ACTION1 | | | | (11) |
| +DBJ_ACTION1 | | | | (12) |
| ?OTHERWISE | | | F | |
| ?TIMEOUT | | | F | |
| RM_React | | | | |
| +JAM_B1 | | | | (12) |

Continued on next page .....



Copyright International Organization for Standardization
Provided by IHS under license with ISO
No reproduction or networking permitted without license from IHS
Not for Resale

..... Continued from previous page

| Behavior Description | Label | Constraints Reference | V | Comments |
|---|---|---|---|---|
| START T_Announce | | | | |
| ?TIMEOUT T_Announce | L5 | | | (9) |
| START RM_React | | | | |
| | | | | |
| [LINE_STATE_ILS=TRUE] | | | | |
| GOTO L5 | | | | |
| +JAM_ACTION1 | | | | (11) |
| +DBJ_ACTION1 | | | | (12) |
| ?OTHERWISE | | | F | |
| ?TIMEOUT | | | F | |
| RM_React | | | | |
| [LINE_STATE_QLS=TRUE] | | | | (13) |
| START T_Announce | | | | |
| ?TIMEOUT T_Announce | L6 | | | (9) |
| START RM_React | | | | |
| | | | | |
| | | | P | (13) |
| [LINE_STATE_QLS=TRUE] | | | | |
| ?OTHERWISE | | | F | |
| ?TIMEOUT RM_React | | | F | |
| ?CLAIM | | CLAIM_IUT1(IUT_T_BID) | | |
| GOTO L2 | | | | |
| ?OTHERWISE | | | F | |
| ?TIMEOUT RM_React | | | F | |
| ?OTHERWISE | | | F | |
| ?BEACON | | BEACON_IUT1 | | |
| !BEACON | | BEACON_IUT1 | | |
| GOTO L0 | | | | |
| ?OTHERWISE | | | F | |
| ?TIMEOUT D_Max | | | F | |

**Extended Comments:**

(1) IUT starts to detect a duplicate address condition on the ring.
(2) Force IUT's MAC to enter the Claim process.
(3) IUT's MAC is in the Claim process.
(4) 2(D Max) expires. IUT's MAC has Claimed for 2(D_Max).
(5) IUT receives its own Beacon frame while Claiming for longer than 2(D_Max).
(6) IUT receives other Claim frame with nonzero address not detected as duplicate and T_Req<=T_Max_LB.
(7) IUT scrubs its own Beacon frame using its Local Address.
(8) IUT changes its MAC Local Address to Universal Address.
(9) T_Announce expires.
(10) IUT configures its MAC to yield in the Claim process to the other MAC.
(11) IUT performs Jam Action.
(12) IUT performs Double Beacon Jam Action.
(13) IUT disconnects the signal (removes its MAC from the ring).

RM (44c)



Copyright International Organization for Standardization
Provided by IHS under license with ISO
No reproduction or networking permitted without license from IHS
Not for Resale

### 8.12.6 Directed_Beacon1

| Test Case Dynamic Behavior | | | | |
|---|---|---|---|---|
| **Reference** : FDDI_RMT/STUCK_BEACONING/NO_DUP_ADD/Directed_Beacon1<br>**Identifier** : Directed_Beacon1<br>**Purpose** : Verify that IUT transmits Directed Beacon frame when its MAC has Beaconed for longer than T_Stuck and there is no duplicate address on the ring.<br>**Default** : | | | | |
| **Behavior Description** | **Label** | **Constraints Reference** | **V** | **Comments** |
| +DUP_ADD_DETECT | | | | (1) |
| START T_Stuck | | | | |
| ?BEACON | L0 | BEACON_IUT | | (2) |
| GOTO L0 | | | | |
| ?TIMEOUT T_Stuck | | | | (3) |
| START RM_React | | | | |
| ?BEACON | L1 | BEACON_IUT | | |
| GOTO L1 | | | | |
| [LINE_STATE_ILS=TRUE] | | | (P) | (4) |
| ?D_BEACON | | D_BEACON_IUT | P | (5) |
| ?OTHERWISE | | | F | |
| ?OTHERWISE | | | F | |
| ?TIMEOUT RM_React | | | F | |
| ?OTHERWISE | | | F | |
| **Extended Comments:**<br>(1) IUT starts to detect a duplicate address condition on the ring.<br>(2) IUT's MAC is Beaconing.<br>(3) T_Stuck expires.<br>(4) IUT resets its MAC. Receives ILS.<br>(5) IUT transmits Directed Beacon frame.<br>RM3, RM(33b), RM(36) & RM6 | | | | |


--`,,```,,,,````-`-`,,`,,`,`,,`---
Copyright International Organization for Standardization
Provided by IHS under license with ISO
No reproduction or networking permitted without license from IHS
Not for Resale

### 8.12.7 Directed_Beacon2

**Test Case Dynamic Behavior**

**Reference** : FDDI_RMT/STUCK_BEACONING/DUP_ADD/Directed_Beacon2
**Identifier** : Directed_Beacon2
**Purpose** : Verify that IUT transmits Directed Beacon frame when its MAC has Beaconed for longer than T_Stuck and there is a duplicate address on the ring.
**Default** :

| Behavior Description | Label | Constraints Reference | V | Comments |
|---|---|---|---|---|
| +DUP_ADD_DETECT2 | | | | (1) |
| !BEACON | | BEACON_IUT2 | | (2) |
| START D_Max | | | | |
| ?BEACON | L0 | BEACON_IUT2 | | |
| !BEACON | | BEACON_IUT2 | | |
| GOTO L0 | | | | |
| ?CLAIM | | CLAIM_IUT2(IUT_T_BID) | | (3) |
| START Twice_D_Max | | | | |
| !CLAIM(T_NEG:=T_REQ+DELTA) | L1 | CLAIM_TESTER(LOWER_T_BID) | | |
| ?CLAIM | | CLAIM_IUT2(IUT_T_BID) | | |
| GOTO L1 | | | | |
| ?TIMEOUT Twice_D_Max | | | | (4) |
| !CLAIM(T_NEG:=T_REQ1) | L2 | CLAIM_IUT2(DIFF_T_BID) | | (5) |
| !CLAIM(T_NEG:=T_REQ2) | | CLAIM_OTHER(OTHER_T_BID) | | (6) |
| START RM_React | | | | |
| ?CLAIM | | CLAIM_IUT2(IUT_T_BID) | | |
| GOTO L2 | | | | |
| ?CLAIM | | CLAIM_OTHER(OTHER_T_BID) | | (7) |
| +JAM_A2 | | | | (8) |
| | | CLAIM_TESTER(LOWER_T_BID) | | |
| !CLAIM(T_NEG:=T_REQ+DELTA) | | | | |
| START Timer_TRM(T_Max) | | | | |
| [LINE_STATE_ILS=TRUE] | L3 | | | |
| !CLAIM | | CLAIM_TESTER(LOWER_T_BID) | | |
| GOTO L3 | | | | |
| ?CLAIM | | CLAIM_IUT2(IUT_T_BID) | | |
| !CLAIM | | CLAIM_TESTER(LOWER_T_BID) | | |
| GOTO L3 | | | | |
| ?TIMEOUT Timer_TRM | | | | (9) |
| ?CLAIM | L4 | CLAIM_IUT2(IUT_T_BID) | | |
| GOTO L4 | | | | |
| ?BEACON | | BEACON_IUT2 | | (10) |
| +TX_D_BEACON | | | | (11) |
| ?OTHERWISE | | | F | |
| ?OTHERWISE | | | F | |
| +JAM_B2 | | | | (12) |
| | | CLAIM_TESTER(LOWER_T_BID) | | |
| !CLAIM(T_NEG:=T_REQ+DELTA) | | | | |
| START Timer_TRM(T_Max) | | | | |
| [LINE_STATE_ILS=TRUE] | L5 | | | |
| !CLAIM | | CLAIM_TESTER(LOWER_T_BID) | | |
| GOTO L5 | | | | |

Continued on next page .....



--`,,```,,,,````-`-`,,`,,`,`,,`---
Copyright International Organization for Standardization
Provided by IHS under license with ISO
No reproduction or networking permitted without license from IHS
Not for Resale

..... Continued from previous page.

| Behavior Description | Label | Constraints Reference | V | Comments |
|---|---|---|---|---|
| ?CLAIM | | CLAIM_IUT2(IUT_T_BID) | | |
| !CLAIM | | CLAIM_TESTER(LOWER_T_BID) | | |
| GOTO L5 | | | | |
| ?TIMEOUT Timer_TRM | | | | (9) |
| ?CLAIM | L6 | CLAIM_IUT2(IUT_T_BID) | | |
| GOTO L6 | | | | |
| ?BEACON | | BEACON_IUT2 | | (10) |
| +TX_D_BEACON | | | | (11) |
| ?OTHERWISE | | | F | |
| ?OTHERWISE | | | F | |
| [LINE_STATE_QLS=TRUE] | | | | (13) |
| +IN_Active | | | | (14) |
| | | CLAIM_TESTER(LOWER_T_BID) | | |
| !CLAIM(T_NEG:=T_REQ+DELTA) | | | | |
| START Timer_TRM(T_Max) | | | | |
| [LINE_STATE_ILS=TRUE] | L7 | | | |
| !CLAIM | | CLAIM_TESTER(LOWER_T_BID) | | |
| GOTO L7 | | | | |
| ?CLAIM | | CLAIM_IUT2(IUT_T_BID) | | |
| !CLAIM | | CLAIM_TESTER(LOWER_T_BID) | | |
| GOTO L7 | | | | |
| ?TIMEOUT Timer_TRM | | | | (9) |
| ?CLAIM | L8 | CLAIM_IUT2(IUT_T_BID) | | |
| GOTO L8 | | | | |
| ?BEACON | | BEACON_IUT2 | | (10) |
| +TX_D_BEACON | | | | (11) |
| ?OTHERWISE | | | F | |
| ?OTHERWISE | | | F | |
| ?OTHERWISE | | | F | |
| ?TIMEOUT RM_React | | | F | |
| ?OTHERWISE | | | F | |
| ?OTHERWISE | | | F | |
| ?TIMEOUT D_Max | | | F | |

**Extended Comments:**

(1) IUT detects a duplicate address condition on the ring.
(2) Forward IUT's Beacon frame.
(3) IUT enters the Claim process.
(4) IUT has Claimed for 2 (D_Max).
(5) IUT receives its own Claim frame with different T_Bid. There is a duplicate address on the ring.
(6) IUT receives other MAC's Claim frame with nonzero address not detected as duplicate and T_Req<=T_Max_LB.
(7) IUT configures its MAC to yield in the Claim process to other MAC.
(8) IUT performs Jam Action.
(9) Keep IUT in the Claim process for T_Max.
(10) IUT enters the Beacon process.
(11) IUT transmits Directed Beacon frame after its MAC has Beaconed for longer than T_Stuck.
(12) IUT performs Double Beacon Jam Action.
(13) IUT disconnects the signal (removes its MAC).
(14) Perform "IN_Active" subroutine in PCM ATS to reconnect IUT's MAC to the ring (RM_Join=SET).

RM3, RM(34c), RM6, RM(44b) & RM(46)



--`,,```,,,,````-`-`,,`,,`,`,,`---
Copyright International Organization for Standardization
Provided by IHS under license with ISO
No reproduction or networking permitted without license from IHS
Not for Resale

### 8.12.8 Ring_Op

**Test Case Dynamic Behavior**

**Reference** : FDDI_RMT/REST_DIALOG/Ring_Op
**Identifier** : Ring_Op
**Purpose** : Verify that IUT terminates a Restricted Dialog that has persisted on the ring for longer than T_Rmode. Note: This test case is optional.
**Default** :

| Behavior Description | Label | Constraints Reference | V | Comments |
|---|---|---|---|---|
| +INIT_RING | | | | (1) |
| !TOKEN | | TOKEN_R | | (2) |
| START T_Rmode | | | | |
| ?TOKEN | L1 | TOKEN_R | | (3) |
| !TOKEN | | TOKEN_R | | |
| GOTO L1 | | | | |
| ?TIMEOUT T_Rmode | | | | (4) |
| START RM_React | | | | |
| ?TOKEN | L2 | TOKEN_R | | |
| GOTO L2 | | | | |
| [LINE_STATE_ILS=TRUE] | | | (P) | (5) |
| ?CLAIM | | CLAIM_IUT(IUT_T_BID) | P | (6) |
| ?BEACON | | BEACON_IUT | P | (7) |
| ?OTHERWISE | | | F | |
| ?OTHERWISE | | | F | |
| ?TIMEOUT RM_React | | | F | |
| ?TOKEN | | TOKEN_UR | | (8) |
| !TOKEN | | TOKEN_R | | |
| GOTO L1 | | | | |
| ?OTHERWISE | | | F | |

**Extended Comments:**

(1) The ring is operational.
(2) Force IUT to monitor a Restricted Dialog on the ring.
(3) IUT is monitoring the Restricted Dialog on the ring.
(4) T_Rmode expires.
(5) IUT resets its MAC. Receives ILS.
(6) IUT enters the Claim process.
(7) IUT enters the Beacon process.
(8) Some unrestricted Token is still on the ring.

RM(21b)



Copyright International Organization for Standardization
Provided by IHS under license with ISO
No reproduction or networking permitted without license from IHS
Not for Resale

### 8.12.9 Ring_Op_Dup

| Test Case Dynamic Behavior | | | | |
|---|---|---|---|---|
| **Reference** : FDDI_RMT/REST_DIALOG/Ring_Op_Dup<br>**Identifier** : Ring_Op_Dup<br>**Purpose** : Verify that IUT terminates a Restricted Dialog that has persisted on the ring for longer than T_Rmode and there is a duplicate address on the ring. Note: This test case is optional.<br>**Default** : | | | | |
| **Behavior Description** | **Label** | **Constraints Reference** | **V** | **Comments** |
| +INIT_RING | | | | (1) |
| <IUT!NIF_FRAME> | | NIF_REQ | | (2) |
| START Topr | | | | (3) |
| !TOKEN | | TOKEN_UR | | |
| ?NIF_FRAME | L0 | NIF_REQ | | (4) |
| !NIF_FRAME | | NIF_RESP | | (5) |
| START RM_React | | | | |
| ?TIMEOUT RM_React | L1 | | | (6) |
| !TOKEN | | TOKEN_UR | | |
| START T_Limit | | | | |
| ?SRF_FRAME | L2 | SRF_ANN | | (7) |
| !TOKEN | | TOKEN_R | | (8) |
| START T_Rmode | | | | |
| ?TOKEN | L3 | TOKEN_R | | (9) |
| !TOKEN | | TOKEN_R | | |
| GOTO L3 | | | | |
| ?TIMEOUT T_Rmode | | | | (10) |
| START RM_React | | | | |
| ?TOKEN | L4 | TOKEN_R | | |
| GOTO L4 | | | | |
| [LINE_STATE_ILS=TRUE] | | | (P) | (11) |
| ?CLAIM | | CLAIM_IUT(IUT_T_BID) | P | (12) |
| ?BEACON | | BEACON_IUT | P | (13) |
| ?OTHERWISE | | | F | |
| ?OTHERWISE | | | F | |
| ?TIMEOUT RM_React | | | F | |
| ?SRF_FRAME | | SRF_ANN | | |
| !TOKEN | | TOKEN_R | | |
| GOTO L3 | | | | |
| ?OTHERWISE | | | F | |
| ?TOKEN | | TOKEN_UR | | |
| !TOKEN | | TOKEN_UR | | |
| GOTO L2 | | | | |
| ?OTHERWISE | | | F | |
| ?TIMEOUT T_Limit | | | I | |
| ?NIF_FRAME | | NIF_REQ | | |
| !NIF_FRAME | | NIF_RESP | | |
| GOTO L1 | | | | |
| ?OTHERWISE | | | F | |
| ?TOKEN | | TOKEN_UR | | |

Continued on next page .....



Copyright International Organization for Standardization
Provided by IHS under license with ISO
No reproduction or networking permitted without license from IHS
Not for Resale

..... Continued from previous page.

| Behavior Description | Label | Constraints Reference | V | Comments |
|---|---|---|---|---|
| !TOKEN<br>GOTO L0<br>?OTHERWISE<br>?TIMEOUT Topr | | TOKEN_UR | <br><br>F<br>I | |

**Extended Comments:**

(1) The ring is operational.
(2) Force IUT to transmit a NIF request frame.
(3) Wait for operator to send the request frame.
(4) Receives NIF request frame.
(5) Tester sends a NIF response frame with the A bit SET (Dup_Addr_Test=Fail) to simulate a duplicate address condition on the ring.
(6) Wait for RM_React expires. IUT sets DA_Flag, clears MAC_Avail & Loop_Avail.
(7) Receive SRF Announcement frame with DupCondition=mydup (DA_Flag=SET) to indicate that IUT's MAC address has the same address as another MAC on the ring. The ring is operational.
(8) Force IUT to monitor a Restricted Dialog on the ring.
(9) IUT is monitoring the Restricted Dialog on the ring.
(10) T_Rmode expires.
(11) IUT resets its MAC. Receive ILS.
(12) IUT enters the Claim process.
(13) IUT enters the Beacon process.

RM(25), RM5, RM(55) & RM (54b)



Copyright International Organization for Standardization
Provided by IHS under license with ISO
No reproduction or networking permitted without license from IHS
Not for Resale

### 8.12.10 Trace

| Test Case Dynamic Behavior | | | | |
|---|---|---|---|---|
| **Reference** : FDDI_RMT/TRACE_FUNCTION/Trace<br>**Identifier** : Trace<br>**Purpose** : Verify that IUT initiates the Trace function when its MAC has transmitted Directed Beacon frames for longer than T_Direct.<br>**Default** : | | | | |
| **Behavior Description** | **Label** | **Constraints Reference** | **V** | **Comments** |
| +DUP_ADD_DETECT | | | | (1) |
| START T_Stuck | | | | |
| ?BEACON | L0 | BEACON_IUT | | (2) |
| GOTO L0 | | | | |
| ?TIMEOUT T_Stuck | | | | (3) |
| START RM_React | | | | |
| ?BEACON | L1 | BEACON_IUT | | |
| GOTO L1 | | | | |
| [LINE_STATE_ILS=TRUE] | | | | (4) |
| ?D_BEACON | | D_BEACON_IUT | | (5) |
| START T_Direct | | | | |
| ?D_BEACON | L2 | D_BEACON_IUT | | |
| GOTO L2 | | | | |
| ?TIMEOUT T_Direct | | | | (6) |
| START RM_React | | | | |
| ?D_BEACON | L3 | D_BEACON_IUT | | |
| GOTO L3 | | | | |
| [SEC_LINE_STATE_MLS=TRUE] | | | P | (7) |
| ?OTHERWISE | | | F | |
| ?TIMEOUT RM_React | | | F | |
| ?OTHERWISE | | | F | |
| ?OTHERWISE | | | F | |
| ?OTHERWISE | | | F | |
| ?TIMEOUT RM_React | | | F | |
| ?OTHERWISE | | | F | |
| **Extended Comments:**<br>(1) The primary ring is not operational for longer than T_Non_Op. IUT detects a duplicate address condition on the ring.<br>(2) IUT is in the Beacon process.<br>(3) T_Stuck expires.<br>(4) IUT resets its MAC. Receive ILS.<br>(5) IUT transmits Directed Beacon frames.<br>(6) T_Direct expires.<br>(7) IUT initiates the Trace function. Receives MLS on the secondary ring.<br>PC2, RM(67) & RM7 | | | | |


--`,,```,,,,````-`-`,,`,,`,`,,`---
Copyright International Organization for Standardization
Provided by IHS under license with ISO
No reproduction or networking permitted without license from IHS
Not for Resale

## 8.13 Test Step Dynamic Behavior

### 8.13.1 INIT_RING

**Test Step Dynamic Behavior**

**Reference** : FDDI_RMT/LIBRARY/INIT_RING
**Identifier** : INIT_RING
**Objective** : Initiate the ring. At the end of initialization, the second Token would have circulated back to the tester.
**Default** :

| Behavior Description | Label | Constraints Reference | V | Comments |
|---|---|---|---|---|
| +INIT_BID | | | | |
| !BEACON | | BEACON_TESTER | | |
| START Timer_TRM (T_Max) | | | | |
| ?BEACON | L0 | BEACON_TESTER | | (1) |
| !CLAIM(T_NEG:=T_NEG-DELTA) | | CLAIM_TESTER(HIGHER_T_BID) | | (2) |
| START Timer_TRM (T_Max) | | | | |
| ?CLAIM | L1 | CLAIM_TESTER(HIGHER_T_BID) | | (3) |
| !TOKEN | | TOKEN_UR | | (4) |
| START Timer_TRM (T_NEG) | | | | |
| ?TOKEN | L2 | TOKEN_UR | | |
| !TOKEN | | TOKEN_UR | | (5) |
| START Timer_TRM (T_NEG) | | | | |
| ?TOKEN | | TOKEN_UR | | |
| ?OTHERWISE | | | I | |
| ?TIMEOUT Timer_TRM | | | I | |
| ?CLAIM | | CLAIM_TESTER(HIGHER_T_BID) | | |
| GOTO L2 | | | | |
| ?OTHERWISE | | | I | |
| ?TIMEOUT Timer_TRM | | | I | |
| ?BEACON | | BEACON_TESTER | | |
| !CLAIM | | CLAIM_TESTER(HIGHER_T_BID) | | (6) |
| GOTO L1 | | | | |
| ?OTHERWISE | | | I | |
| ?TIMEOUT Timer_TRM | | | I | |
| ?OTHERWISE | | | | |
| !BEACON | | BEACON_TESTER | | (6) |
| GOTO L0 | | | | |
| ?TIMEOUT Timer_TRM | | | I | |

**Extended Comments:**

(1) Beacon process is finished.
(2) Start the Claim process.
(3) The Claim frame is back.
(4) Tester issues the first Token.
(5) Tester issues the second Token.
(6) Keep sending.



Copyright International Organization for Standardization
Provided by IHS under license with ISO
No reproduction or networking permitted without license from IHS
Not for Resale

### 8.13.2 INIT_BID

| Test Step Dynamic Behavior | | | | |
|---|---|---|---|---|
| **Reference** : FDDI_RMT/LIBRARY/INIT_BID<br>**Identifier** : INIT_BID<br>**Objective** : To initiate the T_Bid.<br>**Default** : | | | | |
| **Behavior Description** | **Label** | **Constraints Reference** | **V** | **Comments** |
| ( T1:=(T_REQ-DELTA)*M/80,<br>HIGHER_T_BID:=TWOS_COM(T1),<br>T1:=(T_REQ+DELTA)*M/80,<br>LOWER_T_BID:=TWOS_COM(T1),<br>T1:=T_REQ*M/80,<br>IUT_T_BID:=TWOS_COM(T1),<br>T1:=T_REQ1*M/80,<br>DIFF_T_BID:=TWOS_COM(T1),<br>T1:=T_REQ2*M/80,<br>OTHER_T_BID:=TWOS_COM(T1) ) | | | | |
| **Extended Comments:** | | | | |


Copyright International Organization for Standardization
Provided by IHS under license with ISO
No reproduction or networking permitted without license from IHS
Not for Resale

### 8.13.3 DUP_ADD_DETECT

**Test Step Dynamic Behavior**

**Reference** : FDDI_RMT/LIBRARY/DUP_ADD_DETECT
**Identifier** : DUP_ADD_DETECT
**Objective** : Force IUT to detect a duplicate address condition on the ring.
**Default** :

| Behavior Description | Label | Constraints Reference | V | Comments |
|---|---|---|---|---|
| +INIT_BID | | | | (1) |
| !CLAIM(T_NEG:=T_REQ+DELTA) | | CLAIM_TESTER(LOWER_T_BID) | | (2) |
| START Timer_TRM(T_Max) | | | | |
| ?CLAIM | L0 | CLAIM_IUT(IUT_T_BID) | | (3) |
| START T_Non_Op | | | | (4) |
| !CLAIM | | CLAIM_TESTER(LOWER_T_BID) | | |
| START Timer_TRM(T_Max) | | | | |
| ?CLAIM | L1 | CLAIM_IUT(IUT_T_BID) | | |
| !CLAIM | | CLAIM_TESTER(LOWER_T_BID) | | |
| GOTO L1 | | | | |
| ?TIMEOUT Timer_TRM | | | | (5) |
| ?CLAIM | L2 | CLAIM_IUT(IUT_T_BID) | | (6) |
| GOTO L2 | | | | |
| ?BEACON | | BEACON_IUT | | (7) |
| ?BEACON | L3 | BEACON_IUT | | |
| GOTO L3 | | | | |
| ?TIMEOUT T_Non_Op | | | | (8) |
| ?OTHERWISE | | | I | |
| ?OTHERWISE | | | I | |
| ?OTHERWISE | | | I | |
| ?OTHERWISE | | | | |
| !CLAIM | | CLAIM_TESTER(LOWER_T_BID) | | |
| GOTO L0 | | | | |
| ?TIMEOUT Timer_TRM | | | I | |

**Extended Comments:**

(1) Initiate the bids.
(2) Force IUT to enter the Non_Op state.
(3) IUT enters the Non_Op state. IUT's MAC enters the Claim process.
(4) IUT resets timer TRM.
(5) T_Max expires in the Claim process.
(6) Some Claim frame is still on the ring.
(7) IUT's MAC enters the Beacon process.
(8) T_Non_Op expires. IUT enters the Detect state and starts to detect a duplicate address condition on the ring.

RM(13)

--`,,```,,,,````-`-`,,`,,`,`,,`---



Copyright International Organization for Standardization
Provided by IHS under license with ISO
No reproduction or networking permitted without license from IHS
Not for Resale

### 8.13.4 DUP_ADD_DETECT1

**Test Step Dynamic Behavior**

**Reference** : FDDI_RMT/LIBRARY/DUP_ADD_DETECT1
**Identifier** : DUP_ADD_DETECT1
**Objective** : Force IUT to detect a duplicate address condition on the ring. Note: IUT's MAC Address is a Local Address.
**Default** :

| Behavior Description | Label | Constraints Reference | V | Comments |
|---|---|---|---|---|
| +INIT_BID | | | | (1) |
| !CLAIM(T_NEG:=T_REQ+DELTA) | | CLAIM_TESTER(LOWER_T_BID) | | (2) |
| START Timer_TRM(T_Max) | | | | |
| ?CLAIM | L0 | CLAIM_IUT1(IUT_T_BID) | | (3) |
| START T_Non_Op | | | | (4) |
| !CLAIM | | CLAIM_TESTER(LOWER_T_BID) | | |
| START Timer_TRM(T_Max) | | | | |
| ?CLAIM | L1 | CLAIM_IUT1(IUT_T_BID) | | |
| !CLAIM | | CLAIM_TESTER(LOWER_T_BID) | | |
| GOTO L1 | | | | |
| ?TIMEOUT Timer_TRM | | | | (5) |
| ?CLAIM | L2 | CLAIM_IUT1(IUT_T_BID) | | (6) |
| GOTO L2 | | | | |
| ?BEACON | | BEACON_IUT1 | | (7) |
| ?BEACON | L3 | BEACON_IUT1 | | |
| GOTO L3 | | | | |
| ?TIMEOUT T_Non_Op | | | | (8) |
| ?OTHERWISE | | | I | |
| ?OTHERWISE | | | I | |
| ?OTHERWISE | | | I | |
| ?OTHERWISE | | | | |
| !CLAIM | | CLAIM_TESTER(LOWER_T_BID) | | |
| GOTO L0 | | | | |
| ?TIMEOUT Timer_TRM | | | I | |

**Extended Comments:**

(1) Initiate the bids.
(2) Force IUT to enter the Non_Op state.
(3) IUT enters the Non_Op state. IUT's MAC enters the Claim process.
(4) IUT resets timer TRM.
(5) T_Max expires in the Claim process.
(6) Some Claim frame is still on the ring.
(7) IUT's MAC enters the Beacon process.
(8) T_Non_Op expires. IUT enters the Detect state and starts to detect a duplicate address condition on the ring.

RM(13)


--`,,```,,,,````-`-`,,`,,`,`,,`---
Copyright International Organization for Standardization
Provided by IHS under license with ISO
No reproduction or networking permitted without license from IHS
Not for Resale

### 8.13.5 DUP_ADD_DETECT2

**Test Step Dynamic Behavior**

**Reference** : FDDI_RMT/LIBRARY/DUP_ADD_DETECT2
**Identifier** : DUP_ADD_DETECT2
**Objective** : Force IUT to detect a duplicate address condition on the ring.Note: IUT's MAC Address is Universal Address.
**Default** :

| Behavior Description | Label | Constraints Reference | V | Comments |
|---|---|---|---|---|
| +INIT_BID | | | | (1) |
| !CLAIM(T_NEG:=T_REQ+DELTA) | | CLAIM_TESTER(LOWER_T_BID) | | (2) |
| START Timer_TRM(T_Max) | | | | |
| ?CLAIM | L0 | CLAIM_IUT2(IUT_T_BID) | | (3) |
| START T_Non_Op | | | | (4) |
| !CLAIM | | CLAIM_TESTER(LOWER_T_BID) | | |
| START Timer_TRM(T_Max) | | | | |
| ?CLAIM | L1 | CLAIM_IUT2(IUT_T_BID) | | |
| !CLAIM | | CLAIM_TESTER(LOWER_T_BID) | | |
| GOTO L1 | | | | |
| ?TIMEOUT Timer_TRM | | | | (5) |
| ?CLAIM | L2 | CLAIM_IUT2(IUT_T_BID) | | (6) |
| GOTO L2 | | | | |
| ?BEACON | | BEACON_IUT2 | | (7) |
| ?BEACON | L3 | BEACON_IUT2 | | |
| GOTO L3 | | | | |
| ?TIMEOUT T_Non_Op | | | | (8) |
| ?OTHERWISE | | | I | |
| ?OTHERWISE | | | I | |
| ?OTHERWISE | | | I | |
| ?OTHERWISE | | | | |
| !CLAIM | | CLAIM_TESTER(LOWER_T_BID) | | |
| GOTO L0 | | | | |
| ?TIMEOUT Timer_TRM | | | I | |

**Extended Comments:**

(1) Initiate the bids.
(2) Force IUT to enter the Non_Op state.
(3) IUT enters the Non_Op state. IUT's MAC enters the Claim process.
(4) IUT resets timer TRM.
(5) T_Max expires in the Claim process.
(6) Some Claim frame is still on the ring.
(7) IUT's MAC enters the Beacon process.
(8) T_Non_Op expires. IUT enters the Detect state and starts to detect a duplicate address condition on the ring.

RM(13)



Copyright International Organization for Standardization
Provided by IHS under license with ISO
No reproduction or networking permitted without license from IHS
Not for Resale

### 8.13.6 JAM_A1

| Test Step Dynamic Behavior | | | | |
|---|---|---|---|---|
| **Reference** : FDDI_RMT/LIBRARY/JAM_A1<br>**Identifier** : JAM_A1<br>**Objective** : IUT blocks its MAC input and sources Jam Beacon frames. Note: IUT's MAC Address is Local Address.<br>**Default** : | | | | |
| **Behavior Description** | **Label** | **Constraints Reference** | **V** | **Comments** |
| !CLAIM (T_NEG:=T_REQ2) | | CLAIM_OTHER(OTHER_T_BID) | | (1) |
| [LINE_STATE_ILS=TRUE] | | | | (2) |
| ?J_BEACON | | J_BEACON_IUT1 | | (3) |
| START T_Jam | | | | |
| ?J_BEACON | L0 | J_BEACON_IUT1 | | |
| GOTO L0 | | | | |
| ?TIMEOUT T_Jam | | | | (4) |
| ?J_BEACON | L1 | J_BEACON_IUT1 | | |
| GOTO L1 | | | | |
| [LINE_STATE_ILS=TRUE] | | | | (5) |
| ?OTHERWISE | | | I | |
| ?OTHERWISE | | | I | |
| ?OTHERWISE | | | I | |
| ?OTHERWISE | | | I | |

**Extended Comments:**

(1) Tester sends a Claim frame to check if IUT's MAC input is blocked.
(2) IUT blocks its MAC input, disconnects MAC PHY_DATA.indication, and resets its MAC. Receives ILS.
(3) IUT is sourcing Jam Beacon frames.
(4) IUT has sourced Jam Beacon frames for T_Jam.
(5) IUT reconnects MAC PHY_DATA.indication and resets its MAC again. Receive ILS.

--`,,```,,,,````-`-`,,`,,`,`,,`---



Copyright International Organization for Standardization
Provided by IHS under license with ISO
No reproduction or networking permitted without license from IHS
Not for Resale

### 8.13.7 JAM_A2

| Test Step Dynamic Behavior | | | | |
|---|---|---|---|---|
| **Reference** : FDDI_RMT/LIBRARY/JAM_A2<br>**Identifier** : JAM_A2<br>**Objective** : IUT blocks its MAC input and sources Jam Beacon frames. Note: IUT's MAC Address is Universal Address.<br>**Default** : | | | | |
| **Behavior Description** | **Label** | **Constraints Reference** | **V** | **Comments** |
| !CLAIM (T_NEG:=T_REQ2)<br>[LINE_STATE_ILS=TRUE]<br>?J_BEACON<br>START T_Jam<br>?J_BEACON<br>GOTO L0<br>?TIMEOUT T_Jam<br>?J_BEACON<br>GOTO L1<br>[LINE_STATE_ILS=TRUE]<br>?OTHERWISE<br>?OTHERWISE<br>?OTHERWISE<br>?OTHERWISE | <br><br><br><br>L0<br><br><br>L1<br><br><br><br><br><br> | CLAIM_OTHER(OTHER_T_BID)<br><br>J_BEACON_IUT2<br><br>J_BEACON_IUT2<br><br><br>J_BEACON_IUT2<br><br><br><br><br><br> | <br><br><br><br><br><br><br><br><br><br>I<br>I<br>I<br>I | (1)<br>(2)<br>(3)<br><br><br><br>(4)<br><br><br>(5)<br><br><br><br> |

**Extended Comments:**

(1) Tester sends a Claim frame to check if IUT's MAC input is blocked.
(2) IUT blocks its MAC input,disconnects MAC PHY_DATA.indication, and resets its MAC. Receives ILS.
(3) IUT is sourcing Jam Beacon frames.
(4) IUT has sourced Jam Beacon frames forT_Jam.
(5) IUT reconnects MAC PHY_DATA.indication and resets its MAC again. Receive ILS.



Copyright International Organization for Standardization
Provided by IHS under license with ISO
No reproduction or networking permitted without license from IHS
Not for Resale

### 8.13.8 JAM_ACTION1

| Test Step Dynamic Behavior | | | | |
|---|---|---|---|---|
| **Reference** : FDDI_RMT/LIBRARY/JAM_ACTION1<br>**Identifier** : JAM_ACTION1<br>**Objective** : Verify that IUT performs Jam_Action by blocking its MAC input and sourcing Jam Beacon frames. Note: IUT's MAC Address is Local Address.<br>**Default** : | | | | |
| **Behavior Description** | **Label** | **Constraints Reference** | **V** | **Comments** |
| !CLAIM (T_NEG:=T_REQ2) | | CLAIM_OTHER(OTHER_T_BID) | | (1) |
| [LINE_STATE_ILS=TRUE] | | | P | (2) |
| ?J_BEACON | | J_BEACON_IUT1 | P | (3) |
| START T_Jam | | | | |
| ?J_BEACON | L0 | J_BEACON_IUT1 | | |
| GOTO L0 | | | | |
| ?TIMEOUT T_Jam | | | | (4) |
| ?J_BEACON | L1 | J_BEACON_IUT1 | | |
| GOTO L1 | | | | |
| [LINE_STATE_ILS=TRUE] | | | P | (5) |
| ?OTHERWISE | | | F | |
| ?OTHERWISE | | | F | |
| ?OTHERWISE | | | F | |
| ?OTHERWISE | | | F | |
| **Extended Comments:**<br>(1) Tester sends a Claim frame to check if IUT's MAC input is blocked.<br>(2) IUT blocks its MAC input, disconnects MAC PHY_DATA.indication, and resets its MAC. Receives ILS.<br>(3) IUT is sourcing Jam Beacon frames.<br>(4) IUT has sourced Jam Beacon frames forT_Jam.<br>(5) IUT reconnects MAC PHY_DATA.indication and resets its MAC again. Receive ILS. | | | | |


Copyright International Organization for Standardization
Provided by IHS under license with ISO
No reproduction or networking permitted without license from IHS
Not for Resale

### 8.13.9 JAM_ACTION2

**Test Step Dynamic Behavior**

**Reference** : FDDI_RMT/LIBRARY/JAM_ACTION2
**Identifier** : JAM_ACTION2
**Objective** : Verify that IUT performs Jam_Action by blocking its MAC input and sourcing Jam Beacon frames. Note: IUT's MAC Address is Universal Address.
**Default** :

| Behavior Description | Label | Constraints Reference | V | Comments |
|---|---|---|---|---|
| !CLAIM (T_NEG:=T_REQ2) | | CLAIM_OTHER(OTHER_T_BID) | | (1) |
| [LINE_STATE_ILS=TRUE] | | | (P) | (2) |
| ?J_BEACON | | J_BEACON_IUT2 | (P) | (3) |
| START T_Jam | | | | |
| ?J_BEACON | L0 | J_BEACON_IUT2 | | |
| GOTO L0 | | | | |
| ?TIMEOUT T_Jam | | | | (4) |
| ?J_BEACON | L1 | J_BEACON_IUT2 | | |
| GOTO L1 | | | | |
| [LINE_STATE_ILS=TRUE] | | | P | (5) |
| ?OTHERWISE | | | F | |
| ?OTHERWISE | | | F | |
| ?OTHERWISE | | | F | |
| ?OTHERWISE | | | F | |

**Extended Comments:**

(1) Tester sends a Claim frame to check if IUT's MAC input is blocked.
(2) IUT blocks its MAC input, disconnects MAC PHY_DATA.indication, and resets its MAC. Receives ILS.
(3) IUT is sourcing Jam Beacon frames.
(4) IUT has sourced Jam Beacon frames for T_Jam.
(5) IUT reconnects MAC PHY_DATA.indication and resets its MAC again. Receive ILS.



Copyright International Organization for Standardization
Provided by IHS under license with ISO
No reproduction or networking permitted without license from IHS
Not for Resale

### 8.13.10 JAM_B1

| Test Step Dynamic Behavior | | | | |
|---|---|---|---|---|
| **Reference** : FDDI_RMT/LIBRARY/JAM_B1<br>**Identifier** : JAM_B1<br>**Objective** : IUT initiates the Jam Beacon process twice while its MAC input is not blocked. Note: IUT's MAC Address is Local Address.<br>**Default** : | | | | |
| **Behavior Description** | **Label** | **Constraints Reference** | **V** | **Comments** |
| [LINE_STATE_ILS=TRUE] | | | | (1) |
| ?J_BEACON | | J_BEACON_IUT1 | | (2) |
| START T_Jam, START T_DBJ | | | | |
| ?J_BEACON | L0 | J_BEACON_IUT1 | | |
| GOTO L0 | | | | |
| ?TIMEOUT T_DBJ | | | | (3) |
| ?J_BEACON | L1 | J_BEACON_IUT1 | | |
| GOTO L1 | | | | |
| [LINE_STATE_ILS=TRUE] | | | | (1) |
| ?J_BEACON | L2 | J_BEACON_IUT1 | | (4) |
| GOTO L2 | | | | |
| ?TIMEOUT T_Jam | | | | (5) |
| ?J_BEACON | L3 | J_BEACON_IUT1 | | |
| GOTO L3 | | | | |
| [LINE_STATE_ILS=TRUE] | | | | (1) |
| ?OTHERWISE | | | I | |
| ?OTHERWISE | | | I | |
| ?OTHERWISE | | | I | |
| ?OTHERWISE | | | I | |
| ?TIMEOUT T_Jam | | | I | |
| ?OTHERWISE | | | I | |
| ?OTHERWISE | | | I | |

**Extended Comments:**

(1) IUT resets its MAC. Receive ILS.
(2) IUT initiates the 1st Jam Beacon process. Receive Jam Beacon frame.
(3) T_DBJ expires.
(4) IUT initiates the 2nd Jam Beacon process. Receive Jam Beacon frame.
(5) T Jam expires.


Copyright International Organization for Standardization
Provided by IHS under license with ISO
No reproduction or networking permitted without license from IHS
Not for Resale

### 8.13.11 JAM_B2

**Test Step Dynamic Behavior**

**Reference** : FDDI_RMT/LIBRARY/JAM_B2
**Identifier** : JAM_B2
**Objective** : IUT initiates the Jam Beacon process twice while its MAC input is not blocked. Note: IUT's MAC Address is Universal Address.
**Default** :

| Behavior Description | Label | Constraints Reference | V | Comments |
|---|---|---|---|---|
| [LINE_STATE_ILS=TRUE] | | | | (1) |
| ?J_BEACON | | J_BEACON_IUT2 | | (2) |
| START T_Jam, START T_DBJ | | | | |
| ?J_BEACON | L0 | J_BEACON_IUT2 | | |
| GOTO L0 | | | | |
| ?TIMEOUT T_DBJ | | | | (3) |
| ?J_BEACON | L1 | J_BEACON_IUT2 | | |
| GOTO L1 | | | | |
| [LINE_STATE_ILS=TRUE] | | | | (1) |
| ?J_BEACON | L2 | J_BEACON_IUT2 | | (4) |
| GOTO L2 | | | | |
| ?TIMEOUT T_Jam | | | | (5) |
| ?J_BEACON | L3 | J_BEACON_IUT2 | | |
| GOTO L3 | | | | |
| [LINE_STATE_ILS=TRUE] | | | | (1) |
| ?OTHERWISE | | | I | |
| ?OTHERWISE | | | I | |
| ?OTHERWISE | | | I | |
| ?OTHERWISE | | | I | |
| ?TIMEOUT T_Jam | | | I | |
| ?OTHERWISE | | | I | |
| ?OTHERWISE | | | I | |

**Extended Comments:**

(1) IUT resets its MAC. Receive ILS.
(2) IUT initiates the 1st Jam Beacon process. Receive Jam Beacon frame.
(3) T_DBJ expires.
(4) IUT initiates the 2nd Jam Beacon process. Receive Jam Beacon frame.
(5) T_Jam expires.



Copyright International Organization for Standardization
Provided by IHS under license with ISO
No reproduction or networking permitted without license from IHS
Not for Resale

### 8.13.12 DBJ_ACTION1

**Test Step Dynamic Behavior**

**Reference** : FDDI_RMT/LIBRARY/DBJ_ACTION1
**Identifier** : DBJ_ACTION1
**Objective** : Verify that IUT performs Double Beacon Jam Action by initiating the Jam Beacon process twice while its MAC input is not blocked. Note: IUT's MAC Address is Local Address.
**Default** :

| Behavior Description | Label | Constraints Reference | V | Comments |
|---|---|---|---|---|
| [LINE_STATE_ILS=TRUE] | | | (P) | (1) |
| ?J_BEACON | | J_BEACON_IUT1 | (P) | (2) |
| START T_Jam, START T_DBJ | | | | |
| ?J_BEACON | L0 | J_BEACON_IUT1 | | |
| GOTO L0 | | | | |
| ?TIMEOUT T_DBJ | | | | (3) |
| ?J_BEACON | L1 | J_BEACON_IUT1 | | |
| GOTO L1 | | | | |
| [LINE_STATE_ILS=TRUE] | | | (P) | (1) |
| ?J_BEACON | L2 | J_BEACON_IUT1 | (P) | (4) |
| GOTO L2 | | | | |
| ?TIMEOUT T_Jam | | | | (5) |
| ?J_BEACON | L3 | J_BEACON_IUT1 | | |
| GOTO L3 | | | | |
| [LINE_STATE_ILS=TRUE] | | | P | (1) |
| ?OTHERWISE | | | F | |
| ?OTHERWISE | | | F | |
| ?OTHERWISE | | | F | |
| ?OTHERWISE | | | F | |
| ?TIMEOUT T_Jam | | | F | |
| ?OTHERWISE | | | F | |
| ?OTHERWISE | | | F | |

**Extended Comments:**

(1) IUT resets its MAC. Receive ILS.
(2) IUT initiates the 1st Jam Beacon process. Receive Jam Beacon frame.
(3) T_DBJ expires.
(4) IUT initiates the 2nd Jam Beacon process. Receive Jam BEACON frame.
(5) T_Jam expires.


Copyright International Organization for Standardization
Provided by IHS under license with ISO
No reproduction or networking permitted without license from IHS
Not for Resale

### 8.13.13 DBJ_ACTION2

| Test Step Dynamic Behavior | | | | |
|---|---|---|---|---|
| **Reference** : FDDI_RMT/LIBRARY/DBJ_ACTION2<br>**Identifier** : DBJ_ACTION2<br>**Objective** : Verify that IUT performs Double Beacon Jam Action by initiating the Jam Beacon process twice while its MAC input is not blocked. Note: IUT's MAC Address is Universal Address.<br>**Default** : | | | | |
| **Behavior Description** | **Label** | **Constraints Reference** | **V** | **Comments** |
| [LINE_STATE_ILS=TRUE] | | | (P) | (1) |
| ?J_BEACON | | J_BEACON_IUT2 | (P) | (2) |
| START T_Jam, START T_DBJ | | | | |
| ?J_BEACON | L0 | J_BEACON_IUT2 | | |
| GOTO L0 | | | | |
| ?TIMEOUT T_DBJ | | | | (3) |
| ?J_BEACON | L1 | J_BEACON_IUT2 | | |
| GOTO L1 | | | | |
| [LINE_STATE_ILS=TRUE] | | | (P) | (1) |
| ?J_BEACON | L2 | J_BEACON_IUT2 | (P) | (4) |
| GOTO L2 | | | | |
| ?TIMEOUT T_Jam | | | | (5) |
| ?J_BEACON | L3 | J_BEACON_IUT2 | | |
| GOTO L3 | | | | |
| [LINE_STATE_ILS=TRUE] | | | P | (1) |
| ?OTHERWISE | | | F | |
| ?OTHERWISE | | | F | |
| ?OTHERWISE | | | F | |
| ?OTHERWISE | | | F | |
| ?TIMEOUT T_Jam | | | F | |
| ?OTHERWISE | | | F | |
| ?OTHERWISE | | | F | |
| **Extended Comments:**<br>(1) IUT resets its MAC. Receive ILS.<br>(2) IUT initiates the 1st Jam Beacon process. Receive Jam Beacon frame.<br>(3) T_DBJ expires.<br>(4) IUT initiates the 2nd Jam Beacon process. Receive Jam BEACON frame.<br>(5) T Jam expires. | | | | |



Copyright International Organization for Standardization
Provided by IHS under license with ISO
No reproduction or networking permitted without license from IHS
Not for Resale

### 8.13.14 CHANGE_ADD

| Test Step Dynamic Behavior | | | | |
|---|---|---|---|---|
| **Reference** : FDDI_RMT/LIBRARY/CHANGE_ADD<br>**Identifier** : CHANGE_ADD<br>**Objective** : IUT changes its MAC Local Address to Universal Address.<br>**Default** : | | | | |
| **Behavior Description** | **Label** | **Constraints Reference** | **V** | **Comments** |
| !CLAIM(T_NEG:=T_REQ+DELTA)<br>START Timer_TRM(T_Max)<br>?CLAIM<br>!CLAIM<br>GOTO L0<br>?CLAIM<br>?OTHERWISE<br>?TIMEOUT Timer_TRM | <br><br>L0<br><br><br><br><br> | CLAIM_TESTER(LOWER_T_BID)<br><br>CLAIM_IUT1(IUT_T_BID)<br>CLAIM_TESTER(LOWER_T_BID)<br><br>CLAIM_IUT2(IUT_T_BID)<br><br> | <br><br><br><br><br>I<br>I | (1)<br><br>(2)<br><br><br>(3)<br><br> |
| **Extended Comments:**<br>(1) Force IUT's MAC to enter the Claim process to check its MAC address.<br>(2) IUT may not change its MAC address yet.<br>(3) IUT changes its MAC Local Address to Universal Address. | | | | |

### 8.13.15 CHANGE_MAC_ADD

| Test Step Dynamic Behavior | | | | |
|---|---|---|---|---|
| **Reference** : FDDI_RMT/LIBRARY/CHANGE_MAC_ADD<br>**Identifier** : CHANGE_MAC_ADD<br>**Objective** : Verify that IUT changes its MAC Local Address to Universal Address.<br>**Default** : | | | | |
| **Behavior Description** | **Label** | **Constraints Reference** | **V** | **Comments** |
| !CLAIM(T_NEG:=T_REQ+DELTA)<br>START Timer_TRM(T_Max)<br>?CLAIM<br>!CLAIM<br>GOTO L0<br>?CLAIM<br>?OTHERWISE<br>?TIMEOUT Timer_TRM | <br><br>L0<br><br><br><br><br> | CLAIM_TESTER(LOWER_T_BID)<br><br>CLAIM_IUT1(IUT_T_BID)<br>CLAIM_TESTER(LOWER_T_BID)<br><br>CLAIM_IUT2(IUT_T_BID)<br><br> | <br><br><br><br><br>P<br>F<br>F | (1)<br><br>(2)<br><br><br>(3)<br><br> |
| **Extended Comments:**<br>(1) Force IUT's MAC to enter the Claim process to check its MAC address.<br>(2) IUT may not change its MAC address yet.<br>(3) IUT changes its MAC Local Address to Universal Address. | | | | |


Copyright International Organization for Standardization
Provided by IHS under license with ISO
No reproduction or networking permitted without license from IHS
Not for Resale

### 8.13.16 TX_D_BEACON

| Test Step Dynamic Behavior | | | | |
|---|---|---|---|---|
| **Reference** : FDDI_RMT/LIBRARY/TX_D_BEACON<br>**Identifier** : TX_D_BEACON<br>**Objective** : Verify that IUT transmits Directed Beacon frames after its MAC has Beaconed for longer than T_Stuck.<br>**Default** : | | | | |
| **Behavior Description** | **Label** | **Constraints Reference** | **V** | **Comments** |
| START T_Stuck | | | | |
| ?BEACON | L0 | BEACON_IUT2 | | (1) |
| GOTO L0 | | | | |
| ?TIMEOUT T_Stuck | | | | (2) |
| START RM_React | | | | |
| ?BEACON | L1 | BEACON_IUT2 | | |
| GOTO L1 | | | | |
| [LINE_STATE_ILS=TRUE] | | | P | (3) |
| ?D_BEACON | | D_BEACON_IUT2 | P | (4) |
| ?OTHERWISE | | | F | |
| ?OTHERWISE | | | F | |
| ?TIMEOUT RM_React | | | F | |
| ?OTHERWISE | | | F | |
| **Extended Comments:**<br>(1) IUT is in Beacon process.<br>(2) T_Stuck expires.<br>(3) IUT resets its MAC. Receive ILS.<br>(4) IUT transmits Directed Beacon frames. | | | | |



Copyright International Organization for Standardization
Provided by IHS under license with ISO
No reproduction or networking permitted without license from IHS
Not for Resale

# 9 Frame Base Management (FBM) - Abstract Test Suite

## 9.1 Test Suite Overview

### 9.1.1 Test Suite Structure

| Test Suite Structure | | | |
|---|---|---|---|
| **Suite Name** : FDDI_FBM<br>**Standards ref.** : ISO/IEC 9314-6:1998<br>**PICS proforma ref.** : ISO/IEC 9314-13:1998<br>**PIXIT proforma ref.** :<br>**PICS/PIXIT use** :<br>**Test Method(s)** : Remote Single Layer Method<br>**Comments** : | | | |
| **Test Group Reference** | **Selection Ref.** | **Test Group Objective** | **Page** |
| NIF | | Test Neighbor Notification process | 271 |
| SIF | | | 271 |
| ECF | | | 272 |
| RAF | | | 272 |
| ESF | | | 273 |
| PMF | | | 274 |


Copyright International Organization for Standardization
Provided by IHS under license with ISO
No reproduction or networking permitted without license from IHS
Not for Resale

### 9.1.2 Test Case Index

| Test Case Index | | | | |
|---|---|---|---|---|
| **Test Group Reference** | **Test Case Id** | **Selection Ref** | **Description** | **Page** |
| FDDI/FBM/NIF/announce | NIF_Announce1 | OPTION_01 | optional implementation | 501 |
| FDDI/FBM/NIF/request | NIF_Request1<br>Invalid_UNA | SELECT_00<br>SELECT_00 | testing neighbor notification<br>testing neighbor notification | 501 |
| FDDI/FBM/PMF/GET/Response | Valid_DNA<br>Invalid_DNA<br>Old_UNA<br>Old_DNA | SELECT_00<br>SELECT_00<br>SELECT_00<br>SELECT_00 | testing a valid DNA<br>testing neighbor notification<br>testing neighbor notification<br>testing neighbor notification | 503 |
| FDDI/FBM/SIF/CONF/request | SIFC_Request1 | SELECT_00 | testing SIF Configuration Request | 507 |
| FDDI/FBM/SIF/CONF/response | SIFC_Resp1<br>SIFC_Resp2 | SELECT_00<br>SELECT_00 | Testing SIF Configuration Response | 507 |
| FDDI/FBM/SIF/OPER/request | SIFO_Request1 | SELECT_00 | Testing SIF Operation Request | 508 |
| FDDI/FBM/SIF/OPER/response | SIFO_Oper_-Response1<br>SIFO_Oper_-Response2 | SELECT_00<br>SELECT_00 | Testing SIF Operation Response | 509 |
| FDDI/FBM/ECHO/request | ECHO_Request1 | SELECT_00 | Testing ECF Request | 510 |
| FDDI/FBM/ECHO/response | ECHO_Receive1<br>ECHO_Receive2 | SELECT_00<br>SELECT_00 | Testing ECHO Response | 510 |
| FDDI/FBM/RAF/ALLOC/request | SBA_REQ_Req1 | SELECT_00 | Testing SBA AllocationRequest Request | 512 |
| FDDI/FBM/RAF/ALLOC/response | SBA_REQ_Resp1 | SELECT_00 | Testing SBA AllocationRequest Response | 513 |
| FDDI/FBM/RAF/REPORT/request | SBA_REP_Req1 | SELECT_00 | Testing SBA AllocationReport Request | 513 |
| FDDI/FBM/RAF/REPORT/-response | SBA_REP_Resp1 | SELECT_00 | Testing SBA AllocationReport Response | 514 |
| FDDI/FBM/RAF/CHANGE/request | SBA_CHG_Req1 | SELECT_00 | Testing SBA AllocatiionChange Request | 515 |

Continued on next page ....

.



Copyright International Organization for Standardization
Provided by IHS under license with ISO
No reproduction or networking permitted without license from IHS
Not for Resale

..... Continued from previous page

| Test Case Index | | | | |
|---|---|---|---|---|
| **Test Group Reference** | **Test Case Id** | **Selection Ref** | **Description** | **Page** |
| FDDI/FBM/RAF/CHANGE/-response | SBA_CHG_Resp1 | SELECT_00 | Testing SBA AllicationChange Response | 515 |
| FDDI/FBM/ESF/request | ESF_Request1 | SELECT_00 | | 516 |
| FDDI/FBM/SRF/announce | SRF_announce | SELECT_00 | | 517 |
| FDDI/FBM/PMF/GET/request | SingleAttribute_TX | SELECT_00 | | 518 |
| | MultipleAttribute_TX | | | |
| | MultipleGroup-Attributes_TX | | | |
| FDDI/FBM/PMF/GET/response | SingleAttribute_RX | | | 519 |
| | MultipleAttribute_RX | | | |
| | MultipleGroup-Attributes_RX | | | |
| | InvalidMultipleGroup-Attributes_RX | | | |

### 9.1.3 Test Step Index

| **Test Group Reference** | **Test Case Id** | **Selection Ref** | **Description** | **Page** |
|---|---|---|---|---|
| NIF/Transmit | NIF_Announce1 | | | 501 |
| | NIF_Request1 | | | 502 |
| SIF/SIF_CONF/transmit | SIFC_Request1 | | | 507 |
| SIF/SIF_CONF/receive | SIFC_Resp1 | | | 507 |
| SIF/SIF_OPER/transmit | SIFO_Request1 | | | 508 |
| SIF/SIF_OPER/receive | SIF_Oper_Response1 | | | 509 |

Continued on next page ....



Copyright International Organization for Standardization
Provided by IHS under license with ISO
No reproduction or networking permitted without license from IHS
Not for Resale

..... Continued from previous page.

| Test Group Reference | Test Case Id | Selection Ref | Description | Page |
|---|---|---|---|---|
| ECHO/transmit | ECHO_Request1 | | | 510 |
| ECHO/receive | ECHO_Receive1 | | | 510 |
| ECHO/receive | ECHO_Receive2 | | | 511 |
| RAF/SBA_ALLOC/transmit | SBA_REQ_Request1 | | | 512 |
| RAF/SBA_ALLOC/receive | SBA_REQ_Resp1 | | | 513 |
| RAF/SBA_REPORT/transmit | SBA_REP_Req1 | | | 513 |
| RAF/SBA_REPORT/receive | SBA_REP_Resp1 | | | 514 |
| RAF/SBA_CHANGE/transmit | SBA_CHG_Req1 | | | 515 |
| RAF/SBA_CHANGE/receive | SBA_CHG_Resp1 | | | 515 |
| SRF/transmit | SRF_Announce1 | | | 517 |
| ESF/transmit | ESF_Request1 | | | 516 |

## 9.2 Declaration Part

### 9.2.1 Definitions

#### 9.2.1.1 ASN.1 Type Definitions for SMT Attributes

| ASN.1 Type Definition | | |
|---|---|---|
| **Type Name :** SMTMIBGRP_Group<br>**Comments :** | | |
| **Type Definition** | | |
| CHOICE | {smtstationIdgrp | SMTStationId_Group, |
| | smtstationconfiggrp | SMTStationConfig_Group, |
| | smtstatusgrp | SMTStatus_Group, |
| | smtmiboperationgrp | SMTMIBOperation_Group, |
| | maccapabilitiesgrp | MACCapabilities_Group, |
| | macconfiggrp | MACConfig_Group, |
| | macaddressgrp | MACAddress_Group, |
| | macoperationgrp | MACOperation_Group, |
| | maccountersgrp | MACCounters_Group, |
| | macframeerrorconditiongrp | MACFrameErrorCondition_Group, |
| | macnotcopiedconditiongrp | MACNotCopiedCondition_Group, |
| | macstatusgrp | MACStatus_Group, |
| | pathconfiggrp | PATHConfig_Group, |
| | portlergrp | PORTLer_Group, |
| | portoperationgrp | PORTOperation_Group, |
| | porterrorctrsgrp | PORTErrorCtrs_Group, |
| | portlergrp | PORTLer_Group, |
| | portstatusgrp | PORTStatus_Group |
| | } | |



Copyright International Organization for Standardization
Provided by IHS under license with ISO
No reproduction or networking permitted without license from IHS
Not for Resale

| ASN.1 Type Definition |
|---|
| **Type Name :** ValidMultiple_Attributes<br>**Comments :** |
| **Type Definition** |
| SET {stationid SMTStationId,<br>opversionid SMTOpVersionId } |

| ASN.1 Type Definition |
|---|
| **Type Name :** InvalidMultiple_Attributes<br>**Comments :** |
| **Type Definition** |
| SET {stationid SMTStationId,<br>framestatusfunctions MACFrameStatusFunctions } |

| ASN.1 Type Definition |
|---|
| **Type Name :** ValidMultiple_Group<br>**Comments :** |
| **Type Definition** |
| SET {smtstationIdgrp SMTStationId_Group,<br>smtstationconfiggrp SMTStationConfig_Group } |

| ASN.1 Type Definition |
|---|
| **Type Name :** InvalidMultiple_Group<br>**Comments :** |
| **Type Definition** |
| SET {smtstationIdgrp SMTStationId_Group,<br>capabilitiesgrp MACCapabilities_Group} |

| ASN.1 Type Definition |
|---|
| **Type Name :** SYMBOL<br>**Comments :** |
| **Type Definition** |
| SEQUENCE OF BITSTRING(SIZE(5..5)) |


Copyright International Organization for Standardization
Provided by IHS under license with ISO
No reproduction or networking permitted without license from IHS
Not for Resale

| ASN.1 Type Definition |
|---|
| **Type Name :** UNA_GENERAL<br>**Comments :** |
| **Type Definition** |

```
SEQUENCE    {Parameter_Type          OCTETSTRING(SIZE(2)),
             Parameter_Length        OCTETSTRING(SIZE(2)),
             PAD                     OCTETSTRING(SIZE(2)),
             una                     MACUpstreamNbrType      }
```

| ASN.1 Type Definition |
|---|
| **Type Name :** StationDescriptor_GENERAL<br>**Comments :** |
| **Type Definition** |

```
SEQUENCE    {Parameter_Type          OCTETSTRING(SIZE(2)),
             Parameter_Type          OCTETSTRING(SIZE(2)),
             Node_Class              OCTETSTRING(SIZE(1)),
             Macct                   OCTETSTRING(SIZE(1)),
             NonMaster_Ct            OCTETSTRING(SIZE(1)),
             Master_Ct               OCTETSTRING(SIZE(1))    }

-- When one of more Ports of MACs physically instantiated in the MIB are not physically present,
-- the Macct, NonMaster_Ct, and Master_Ct will differ from the corresponding MIB attributes.
```

| ASN.1 Type Definition |
|---|
| **Type Name :** StationState_GENERAL<br>**Comments :** |
| **Type Definition** |

```
SEQUENCE    {Parameter_Type          OCTETSTRING(SIZE(2)),
             Parameter_Length        OCTETSTRING(SIZE(2)),
             PAD                     OCTETSTRING(SIZE(2)),
             Topology                BITSTRING(SIZE(8..8)),
             DuplAddress             BITSTRING(SIZE(8..8))   }
```

| ASN.1 Type Definition |
|---|
| **Type Name :** MsgTimeStamp_GENERAL<br>**Comments :** |
| **Type Definition** |

```
SEQUENCE    {Parameter_Type          OCTETSTRING(SIZE(2)),
             Parameter_Length        OCTETSTRING(SIZE(8)),
             msgtimestamp            SMTTimeStampType    }
```



Copyright International Organization for Standardization
Provided by IHS under license with ISO
No reproduction or networking permitted without license from IHS
Not for Resale

| ASN.1 Type Definition | | | |
|---|---|---|---|
| **Type Name :** StationPolicies_GENERAL<br>**Comments :** | | | |
| **Type Definition** | | | |
| SEQUENCE | {Parameter_Type | OCTETSTRING(SIZE(2)), | |
| | Parameter_Length | OCTETSTRING(SIZE(2)), | |
| | configpolicy | SMTConfigPolicyType, | |
| | connectionpolicy | SMTConnectionPolicyType | } |

| ASN.1 Type Definition | | | |
|---|---|---|---|
| **Type Name :** PathLatency_GENERAL<br>**Comments :** | | | |
| **Type Definition** | | | |
| SEQUENCE | {Parameter_Type | OCTETSTRING(SIZE(2)), | |
| | Parameter_Length | OCTETSTRING(SIZE(2)), | |
| | PORTOutIndex | OCTETSTRING(SIZE(1)), | |
| | PathLatencyRing1 | OCTETSTRING(SIZE(1)), | |
| | PORTOutIndex | OCTETSTRING(SIZE(1)), | |
| | PathLatencyRing2 | OCTETSTRING(SIZE(1)) | } |
| -- This is the latency contribution of the Paths within the station. It is not a MIB attribute and is<br>-- optional. The latency is given in octet units. The Port indices are those used to form the Path<br>-- descriptor SMT Parameter, X'0008'. | | | |

| ASN.1 Type Definition | | | |
|---|---|---|---|
| **Type Name :** MACNeighbors_GENERAL<br>**Comments :** | | | |
| **Type Definition** | | | |
| SEQUENCE | {Parameter_Type | OCTETSTRING(SIZE(2)), | |
| | Parameter_Length | OCTETSTRING(SIZE(2)), | |
| | PAD | OCTETSTRING(SIZE(2)), | |
| | mibindex | OCTETSTRING(SIZE(2)), | |
| | macindex | OCTETSTRING(SIZE(6)), | |
| | una | MACUpstreamNbrType, | |
| | dna | MACDownstreamNbrType | } |


--`,,```,,,,````-`-`,,`,,`,`,,`---
Copyright International Organization for Standardization
Provided by IHS under license with ISO
No reproduction or networking permitted without license from IHS
Not for Resale

| ASN.1 Type Definition | | |
|---|---|---|
| **Type Name :** PathDescriptor_GENERAL<br>**Comments :** | | |
| **Type Definition** | | |
| SEQUENCE | {Parameter_Type | OCTETSTRING(SIZE(2)), |
| | Parameter_Length | OCTETSTRING(SIZE(2)), |
| | mibindex | OCTETSTRING(SIZE(2)), |
| | PortType | CMNPortType, |
| | ConnectState | PORTConnectStateType, |
| | RemotePORTType | CMNPortType, |
| | RemoteMAC | PORTMACIndicatedType, |
| | ConResourceIndex | OCTETSTRING(SIZE(4)), |
| | MAC_Addr | OCTETSTRING(SIZE(6)), |
| | ConResourceIndex | OCTETSTRING(SIZE(2)) } |

| ASN.1 Type Definition | | |
|---|---|---|
| **Type Name :** MACStatus_GENERAL<br>**Comments :** | | |
| **Type Definition** | | |
| SEQUENCE | {Parameter_Type | OCTETSTRING(SIZE(2)), |
| | Parameter_Length | OCTETSTRING(SIZE(2)), |
| | mibindex | OCTETSTRING(SIZE(4)), |
| | macindex | OCTETSTRING(SIZE(4)), |
| | T_Req | MACTReqType, |
| | T_Neg | MACTNegType, |
| | T_Max | MACTMaxType, |
| | TVXValue | MACTVXValueType, |
| | T_Min | OCTETSTRING(SIZE(4)), |
| | SBA | PATHSbaPayloadType, |
| | Frame_Ct | MACFrame_CtType, |
| | Error_Ct | MACError_CtType, |
| | Lost_Ct | MACLost_CtType } |



Copyright International Organization for Standardization
Provided by IHS under license with ISO
No reproduction or networking permitted without license from IHS
Not for Resale

| ASN.1 Type Definition | | |
|---|---|---|
| **Type Name :** PortLEMStatus_GENERAL<br>**Comments :** | | |
| **Type Definition** | | |
| SEQUENCE | {Parameter_TypeCMNCounter_Q | OCTETSTRING(SIZE(2)), |
| | Parameter_Length | OCTETSTRING(SIZE(2)), |
| | mibindex | OCTETSTRING(SIZE(2)), |
| | portindex | OCTETSTRING(SIZE(2)), |
| | PAD | OCTETSTRING(SIZE(2)), |
| | Ler_Cutoff | PORTLer_CutoffType, |
| | Ler_Alarm | PORTLer_AlarmType, |
| | Ler_Estimate | PORTLer_EstimateType, |
| | Lem_Reject_Ct | PORTLem_Reject_CtType, |
| | Lem_CT | PORTLem_CtType } |

| ASN.1 Type Definition | | |
|---|---|---|
| **Type Name :** MACFrameCounters_GENERAL<br>**Comments :** | | |
| **Type Definition** | | |
| SEQUENCE | {Parameter_Type | OCTETSTRING(SIZE(2)), |
| | Parameter_Length | OCTETSTRING(SIZE(2)), |
| | mibindex | OCTETSTRING(SIZE(2)), |
| | macindex | OCTETSTRING(SIZE(2)), |
| | Copied_Ct | MACCopied_CtType, |
| | Transmit_Ct | MACTransmit_CtType } |

| ASN.1 Type Definition | | |
|---|---|---|
| **Type Name :** MACFrameNotCopiedCount_GENERAL<br>**Comments :** | | |
| **Type Definition** | | |
| SEQUENCE | {Parameter_Type | OCTETSTRING(SIZE(2)), |
| | Parameter_Length | OCTETSTRING(SIZE(2)), |
| | mibindex | OCTETSTRING(SIZE(2)), |
| | macindex | OCTETSTRING(SIZE(2)), |
| | NotCopied_Ct | MACNotCopied_CtType } |


Copyright International Organization for Standardization
Provided by IHS under license with ISO
No reproduction or networking permitted without license from IHS
Not for Resale

| ASN.1 Type Definition | | |
|---|---|---|
| **Type Name :** MACPriorityValues_GENERAL<br>**Comments :** | | |
| **Type Definition** | | |
| SEQUENCE | {Parameter_Type | OCTETSTRING(SIZE(2)), |
| | Parameter_Length | OCTETSTRING(SIZE(2)), |
| | mibindex | OCTETSTRING(SIZE(2)), |
| | macindex | OCTETSTRING(SIZE(2)), |
| | T_Pri0 | MACT_Pri0Type, |
| | T_Pri1 | MACT_Pri1Type, |
| | T_Pri2 | MACT_Pri2Type, |
| | T_Pri3 | MACT_Pri3Type, |
| | T_Pri4 | MACT_Pri4Type, |
| | T_Pri5 | MACT_Pri5Type, |
| | T_Pri6 | MACT_Pri6Type } |

| ASN.1 Type Definition | | |
|---|---|---|
| **Type Name :** PortElasticityBuffer_GENERAL<br>**Comments :** | | |
| **Type Definition** | | |
| SEQUENCE | {Parameter_Type | OCTETSTRING(SIZE(2)), |
| | Parameter_Length | OCTETSTRING(SIZE(2)), |
| | mibindex | OCTETSTRING(SIZE(2)), |
| | portindex | OCTETSTRING(SIZE(2)), |
| | EBErrorCt | PORTEBError_CtType } |

| ASN.1 Type Definition | | |
|---|---|---|
| **Type Name :** ManufacturerField_GENERAL<br>**Comments :** | | |
| **Type Definition** | | |
| SEQUENCE | {Parameter_Type | OCTETSTRING(SIZE(2)), |
| | Parameter_Length | OCTETSTRING(SIZE(2)), |
| | menuf_data | SMTManufacturerDataType } |

| ASN.1 Type Definition | | |
|---|---|---|
| **Type Name :** UserField_GENERAL<br>**Comments :** | | |
| **Type Definition** | | |
| SEQUENCE | {Parameter_Type | OCTETSTRING(SIZE(2)), |
| | Parameter_Length | OCTETSTRING(SIZE(2)), |
| | user_data | SMTUserDataType } |



Copyright International Organization for Standardization
Provided by IHS under license with ISO
No reproduction or networking permitted without license from IHS
Not for Resale

| ASN.1 Type Definition | | | |
|---|---|---|---|
| **Type Name :** ECHOData_GENERAL<br>**Comments :** | | | |
| **Type Definition** | | | |
| SEQUENCE | {Parameter_Type<br>Parameter_Length<br>PAD<br>Echo_data | OCTETSTRING(SIZE(2)),<br>OCTETSTRING(SIZE(2)),<br>OCTETSTRING(SIZE(1..3)) DEFAULT NULL,<br>ECH_DATA(length:INTEGER) | } |

| ASN.1 Type Definition | | | |
|---|---|---|---|
| **Type Name :** ReasonCode_GENERAL<br>**Comments :** | | | |
| **Type Definition** | | | |
| SEQUENCE | {Parameter_Type<br>Parameter_Length<br>reason | OCTETSTRING(SIZE(2)),<br>OCTETSTRING(SIZE(2)),<br>OCTETSTRING(SIZE(4)) | } |

| ASN.1 Type Definition | | | |
|---|---|---|---|
| **Type Name :** RejectedFrame_GENERAL<br>**Comments :** | | | |
| **Type Definition** | | | |
| SEQUENCE | {Parameter_Type<br>Parameter_Length<br>PAD<br>RejectedFrameBeginning | OCTETSTRING(SIZE(2)),<br>OCTETSTRING(SIZE(2)),<br>OCTETSTRING(SIZE(3)),<br>OCTETSTRING(SIZE(?)) | } |

| ASN.1 Type Definition | | | |
|---|---|---|---|
| **Type Name :** SMTSupportedVersions_GENERAL<br>**Comments :** | | | |
| **Type Definition** | | | |
| SEQUENCE | {Parameter_Type<br>Parameter_Length<br>PAD<br>numVersions<br>indexOpVersion<br>Version_1<br>Version_2 | OCTETSTRING(SIZE(2)),<br>OCTETSTRING(SIZE(2)),<br>OCTETSTRING(SIZE(2)),<br>OCTETSTRING(SIZE(1)),<br>OCTETSTRING(SIZE(1)),<br>OCTETSTRING(SIZE(2)),<br>OCTETSTRING(SIZE(2)) | } |


Copyright International Organization for Standardization
Provided by IHS under license with ISO
No reproduction or networking permitted without license from IHS
Not for Resale

| ASN.1 Type Definition | | | |
|---|---|---|---|
| **Type Name :** ResourceType_GENERAL<br>**Comments :** | | | |
| **Type Definition** | | | |
| SEQUENCE | {Parameter_Type<br>Parameter_Length<br>ResourceType | OCTETSTRING(SIZE(2)),<br>OCTETSTRING(SIZE(2)),<br>OCTETSTRING(SIZE(4)) | } |

| ASN.1 Type Definition | | | |
|---|---|---|---|
| **Type Name :** SBACommand_GENERAL<br>**Comments :** | | | |
| **Type Definition** | | | |
| SEQUENCE | {Parameter_Type<br>Parameter_Length<br>SbaCommand | OCTETSTRING(SIZE(2)),<br>OCTETSTRING(SIZE(2)),<br>OCTETSTRING(SIZE(4)) | } |

| ASN.1 Type Definition | | | |
|---|---|---|---|
| **Type Name :** SBAPayloadRequest_GENERAL<br>**Comments :** | | | |
| **Type Definition** | | | |
| SEQUENCE | {Parameter_Type<br>Parameter_Length<br>SbaRequest | OCTETSTRING(SIZE(2)),<br>OCTETSTRING(SIZE(2)),<br>OCTETSTRING(SIZE(4)) | } |

| ASN.1 Type Definition | | | |
|---|---|---|---|
| **Type Name :** SBAOverheadRequest_GENERAL<br>**Comments :** | | | |
| **Type Definition** | | | |
| SEQUENCE | {Parameter_Type<br>Parameter_Length<br>SbaOverheadReq | OCTETSTRING(SIZE(2)),<br>OCTETSTRING(SIZE(2)),<br>OCTETSTRING(SIZE(4)) | } |



Copyright International Organization for Standardization
Provided by IHS under license with ISO
No reproduction or networking permitted without license from IHS
Not for Resale

| ASN.1 Type Definition |
|---|
| **Type Name :** SBAAllocationAddress_GENERAL<br>**Comments :** |
| **Type Definition** |
| SEQUENCE {Parameter_Type OCTETSTRING(SIZE(2)),<br>Parameter_Length OCTETSTRING(SIZE(2)),<br>PAD OCTETSTRING(SIZE(2)),<br>SbaAllocationAddr OCTETSTRING(SIZE(6)) } |

| ASN.1 Type Definition |
|---|
| **Type Name :** SBACatagory_GENERAL<br>**Comments :** |
| **Type Definition** |
| SEQUENCE {Parameter_Type OCTETSTRING(SIZE(2)),<br>Parameter_Length OCTETSTRING(SIZE(2)),<br>Catagory OCTETSTRING(SIZE(2)) } |

| ASN.1 Type Definition |
|---|
| **Type Name :** MaximumT_Neg_GENERAL<br>**Comments :** |
| **Type Definition** |
| SEQUENCE {Parameter_Type OCTETSTRING(SIZE(2)),<br>Parameter_Length OCTETSTRING(SIZE(2)),<br>MaxTneg OCTETSTRING(SIZE(4)) } |

| ASN.1 Type Definition |
|---|
| **Type Name :** MinimumSBASegment_GENERAL<br>**Comments :** |
| **Type Definition** |
| SEQUENCE {Parameter_Type OCTETSTRING(SIZE(2)),<br>Parameter_Length OCTETSTRING(SIZE(2)),<br>MinSegment OCTETSTRING(SIZE(4)) DEFAULT {‘00000001’H} } |

| ASN.1 Type Definition |
|---|
| **Type Name :** SBAAllocatable_GENERAL<br>**Comments :** |
| **Type Definition** |
| SEQUENCE {Parameter_Type OCTETSTRING(SIZE(2)),<br>Parameter_Length OCTETSTRING(SIZE(2)),<br>SbaAllocatable OCTETSTRING(SIZE(4)) } |


Copyright International Organization for Standardization
Provided by IHS under license with ISO
No reproduction or networking permitted without license from IHS
Not for Resale

| ASN.1 Type Definition | | |
|---|---|---|
| **Type Name :** Authorization_GENERAL<br>**Comments :** | | |
| **Type Definition** | | |
| SEQUENCE {Parameter_Type<br>Parameter_Length<br>Authorization | OCTETSTRING(SIZE(2)),<br>OCTETSTRING(SIZE(2)),<br>OCTETSTRING(SIZE(?)) | } |

| ASN.1 Type Definition | | |
|---|---|---|
| **Type Name :** ESFID_GENERAL<br>**Comments :** | | |
| **Type Definition** | | |
| SEQUENCE {Parameter_Type<br>Parameter_Length<br>PAD<br>ESF_ID | OCTETSTRING(SIZE(2)),<br>OCTETSTRING(SIZE(2)),<br>OCTETSTRING(SIZE(2)),<br>OCTETSTRING(SIZE(6)) | } |

#### 9.2.1.1.1 SMT Station ID Group Attributes

| ASN.1 Type Definition | | |
|---|---|---|
| **Type Name :** SMTStationId_Group<br>**Comments :** | | |
| **Type Definition** | | |
| SET {stationid<br>opversionid<br>hiversionid<br>loversionid<br>manufacturerdata<br>userdata<br>mibversionid | SMTStationId,<br>SMTOpVersionId,<br>SMTHiVersionId,<br>SMTLoVersionId,<br>SMTManufacturerData OPTIONAL,<br>SMTUserData,<br>SMTMIBVersionId | } |

| ASN.1 Type Definition | | |
|---|---|---|
| **Type Name :** GroupAttribute<br>**Comments :** | | |
| **Type Definition** | | |
| SEQUENCE {Parameter_Type<br>Parameter_Length | OCTETSTRING(SIZE(2)),<br>OCTETSTRING(SIZE(2)) | } |

--`,,```,,,,````-`-`,,`,,`,`,,`---



Copyright International Organization for Standardization
Provided by IHS under license with ISO
No reproduction or networking permitted without license from IHS
Not for Resale

| ASN.1 Type Definition | | | |
|---|---|---|---|
| **Type Name :** SMTStationId<br>**Comments :** | | | |
| **Type Definition** | | | |
| SEQUENCE | {Parameter_Type<br>Parameter_Length<br>stationidtype | OCTETSTRING(SIZE(2)),<br>OCTETSTRING(SIZE(2)),<br>SMTStationIdentifierType | } |

| ASN.1 Type Definition | | | |
|---|---|---|---|
| **Type Name :** SMTOpVersionId<br>**Comments :** | | | |
| **Type Definition** | | | |
| SEQUENCE | {Parameter_Type<br>Parameter_Length<br>PAD<br>opversionidtype | OCTETSTRING(SIZE(2)),<br>OCTETSTRING(SIZE(2)),<br>OCTETSTRING(SIZE(2)),<br>SMTVersionType | } |

| ASN.1 Type Definition | | | |
|---|---|---|---|
| **Type Name :** SMTHiVersionId<br>**Comments :** | | | |
| **Type Definition** | | | |
| SEQUENCE | {Parameter_Type<br>Parameter_Length<br>PAD<br>hiversionidtype | OCTETSTRING(SIZE(2)),<br>OCTETSTRING(SIZE(2)),<br>OCTETSTRING(SIZE(2)),<br>SMTVersionType | } |

| ASN.1 Type Definition | | | |
|---|---|---|---|
| **Type Name :** SMTLoVersionId<br>**Comments :** | | | |
| **Type Definition** | | | |
| SEQUENCE | {Parameter_Type<br>Parameter_Length<br>PAD<br>loversionidtype | OCTETSTRING(SIZE(2)),<br>OCTETSTRING(SIZE(2)),<br>OCTETSTRING(SIZE(2)),<br>SMTVersionType | } |


--`,,```,,,,````-`-`,,`,,`,`,,`---
Copyright International Organization for Standardization
Provided by IHS under license with ISO
No reproduction or networking permitted without license from IHS
Not for Resale

| ASN.1 Type Definition | | | |
|---|---|---|---|
| **Type Name :** SMTManufacturerData<br>**Comments :** | | | |
| **Type Definition** | | | |
| SEQUENCE | {Parameter_Type<br>Parameter_Length<br>manufacturerdatatype | OCTETSTRING(SIZE(2)),<br>OCTETSTRING(SIZE(2)),<br>SMTManufacturerDataType | } |

| ASN.1 Type Definition | | | |
|---|---|---|---|
| **Type Name :** SMTUserData<br>**Comments :** | | | |
| **Type Definition** | | | |
| SEQUENCE | {Parameter_Type<br>Parameter_Length<br>userdatatype | OCTETSTRING(SIZE(2)),<br>OCTETSTRING(SIZE(2)),<br>SMTUserDataType | } |

| ASN.1 Type Definition | | | |
|---|---|---|---|
| **Type Name :** SMTMIBVersionId<br>**Comments :** | | | |
| **Type Definition** | | | |
| SEQUENCE | {Parameter_Type<br>Parameter_Length<br>PAD<br>mibversionidtype | OCTETSTRING(SIZE(2)),<br>OCTETSTRING(SIZE(2)),<br>OCTETSTRING(SIZE(2)),<br>SMTVersionType | } |

--`,,```,,,,````-`-`,,`,,`,`,,`---



Copyright International Organization for Standardization
Provided by IHS under license with ISO
No reproduction or networking permitted without license from IHS
Not for Resale

#### 9.2.1.1.2 SMT Station Configuration Group Attributes

| ASN.1 Type Definition | | |
|---|---|---|
| **Type Name :** SMTStationConfig_Group<br>**Comments :** | | |
| **Type Definition** | | |
| SET {macct | SMTMac_Ct, | |
| nonmasterct | SMTNonMaster_Ct, | |
| masterct | SMTMaster_Ct, | |
| availablepaths | SMTAvailablePaths, | |
| configcapabilities | SMTConfigCapabilities, | |
| configpolicy | SMTConfigPolicy, | |
| connectionpolicy | SMTConnectionPolicy, | |
| tnotify | SMTT_Notify, | |
| statrptpolicy | SMTStatRptPolicy, | |
| tracemacexpiration | SMTTrace_MaxExpiration, | |
| portindexes | SMTPORTIndexes, | |
| macindexes | SMTMACIndexes, | |
| bypasspresent | SMTBypassPresent } | |

| ASN.1 Type Definition | | |
|---|---|---|
| **Type Name :** SMTMac_Ct<br>**Comments :** | | |
| **Type Definition** | | |
| SEQUENCE {Parameter_Type | OCTETSTRING(SIZE(2)), | |
| Parameter_Length | OCTETSTRING(SIZE(2)), | |
| PAD | OCTETSTRING(SIZE(3)), | |
| maccttype | SMTMac_CtType } | |

| ASN.1 Type Definition | | |
|---|---|---|
| **Type Name :** SMTNonMaster_Ct<br>**Comments :** | | |
| **Type Definition** | | |
| SEQUENCE {Parameter_Type | OCTETSTRING(SIZE(2)), | |
| Parameter_Length | OCTETSTRING(SIZE(2)), | |
| PAD | OCTETSTRING(SIZE(3)), | |
| nonmastercttype | SMTNonMaster_CtType} | |


Copyright International Organization for Standardization
Provided by IHS under license with ISO
No reproduction or networking permitted without license from IHS
Not for Resale

| ASN.1 Type Definition | | | |
|---|---|---|---|
| **Type Name :** SMTMaster_Ct<br>**Comments :** | | | |
| **Type Definition** | | | |
| SEQUENCE | {Parameter_Type<br>Parameter_Length<br>PAD<br>mastercttype | OCTETSTRING(SIZE(2)),<br>OCTETSTRING(SIZE(2)),<br>OCTETSTRING(SIZE(3)),<br>SMTMaster_CtType | } |

| ASN.1 Type Definition | | | | |
|---|---|---|---|---|
| **Type Name :** SMTAvailablePaths<br>**Comments :** | | | | |
| **Type Definition** | | | | |
| SEQUENCE | {Parameter_Type<br>Parameter_Length<br>SEQUENCE | {PAD<br>availablepathstype | OCTETSTRING(SIZE(2)),<br>OCTETSTRING(SIZE(2)),<br>OCTETSTRING(SIZE(3)),<br>CMNAvailablePathsType | } } |

| ASN.1 Type Definition | | | |
|---|---|---|---|
| **Type Name :** SMTConfigCapabilities<br>**Comments :** | | | |
| **Type Definition** | | | |
| SEQUENCE | {Parameter_Type<br>Parameter_Length<br>PAD<br>configcapabilitiestype | OCTETSTRING(SIZE(2)),<br>OCTETSTRING(SIZE(2)),<br>OCTETSTRING(SIZE(2)),<br>SMTCapabilitiesType | } |

| ASN.1 Type Definition | | | |
|---|---|---|---|
| **Type Name :** SMTSMTConfigPolicy<br>**Comments :** | | | |
| **Type Definition** | | | |
| SEQUENCE | {Parameter_Type<br>Parameter_Length<br>PAD<br>configpolicytype | OCTETSTRING(SIZE(2)),<br>OCTETSTRING(SIZE(2)),<br>OCTETSTRING(SIZE(2)),<br>SMTConfigPolicyType | } |



Copyright International Organization for Standardization
Provided by IHS under license with ISO
No reproduction or networking permitted without license from IHS
Not for Resale

| ASN.1 Type Definition | | |
|---|---|---|
| **Type Name :** SMTConnectionPolicy<br>**Comments :** | | |
| **Type Definition** | | |
| SEQUENCE | {Parameter_Type | OCTETSTRING(SIZE(2)), |
| | Parameter_Length | OCTETSTRING(SIZE(2)), |
| | PAD | OCTETSTRING(SIZE(2)), |
| | connectionpolicytype | SMTConnectionPolicyType } |

| ASN.1 Type Definition | | |
|---|---|---|
| **Type Name :** SMTT_Notify<br>**Comments :** | | |
| **Type Definition** | | |
| SEQUENCE | {Parameter_Type | OCTETSTRING(SIZE(2)), |
| | Parameter_Length | OCTETSTRING(SIZE(2)), |
| | PAD | OCTETSTRING(SIZE(2)), |
| | tnotifytype | SMTT_NotifyType } |

| ASN.1 Type Definition | | |
|---|---|---|
| **Type Name :** SMTStatRptPolicy<br>**Comments :** | | |
| **Type Definition** | | |
| SEQUENCE | {Parameter_Type | OCTETSTRING(SIZE(2)), |
| | Parameter_Length | OCTETSTRING(SIZE(2)), |
| | PAD | OCTETSTRING(SIZE(3)), |
| | statrptpolicytype | CMNFlag DEFAULT TRUE } |

| ASN.1 Type Definition | | |
|---|---|---|
| **Type Name :** SMTTrace_MaxExpiration<br>**Comments :** | | |
| **Type Definition** | | |
| SEQUENCE | {Parameter_Type | OCTETSTRING(SIZE(2)), |
| | Parameter_Length | OCTETSTRING(SIZE(2)), |
| | PAD | OCTETSTRING(SIZE(2)), |
| | tracemaxexpirationtype | CMNTime } |


Copyright International Organization for Standardization
Provided by IHS under license with ISO
No reproduction or networking permitted without license from IHS
Not for Resale

| ASN.1 Type Definition | | |
|---|---|---|
| **Type Name :** SMTPORTIndexes<br>**Comments :** | | |
| **Type Definition** | | |
| SEQUENCE | {Parameter_Type | OCTETSTRING(SIZE(2)), |
| | Parameter_Length | OCTETSTRING(SIZE(2)), |
| | PAD | OCTETSTRING(SIZE(2)), |
| | portindexestype | SET OF CMNResourceIdType } |

| ASN.1 Type Definition | | |
|---|---|---|
| **Type Name :** SMTMACIndexes<br>**Comments :** | | |
| **Type Definition** | | |
| SEQUENCE | {Parameter_Type | OCTETSTRING(SIZE(2)), |
| | Parameter_Length | OCTETSTRING(SIZE(2)), |
| | PAD | OCTETSTRING(SIZE(2)), |
| | macindexestype | SET OF CMNResourceIdType } |

| ASN.1 Type Definition | | |
|---|---|---|
| **Type Name :** SMTBypassPresent<br>**Comments :** | | |
| **Type Definition** | | |
| SEQUENCE | {Parameter_Type | OCTETSTRING(SIZE(2)), |
| | Parameter_Length | OCTETSTRING(SIZE(2)), |
| | PAD | OCTETSTRING(SIZE(3)), |
| | bypasspresenttype | CMNFlag DEFAULT TRUE } |

#### 9.2.1.1.3 SMT Status Group Attributes

| ASN.1 Type Definition | | |
|---|---|---|
| **Type Name :** SMTStatus_Group<br>**Comments :** | | |
| **Type Definition** | | |
| SET | {ecmstate | SMTECMState, |
| | cfstate | SMTCF_State, |
| | holdstate | SMTHoldState OPTIONAL, |
| | remotedisconnectflag | SMTRemoteDisconnectFlag, |
| | stationstatus | SMTStationStatus, |
| | peerwrapflag | SMTPeerWrapFlag } |



Copyright International Organization for Standardization
Provided by IHS under license with ISO
No reproduction or networking permitted without license from IHS
Not for Resale

| ASN.1 Type Definition | | | |
|---|---|---|---|
| **Type Name :** SMTECMState<br>**Comments :** | | | |
| **Type Definition** | | | |
| SEQUENCE | {Parameter_Type<br>Parameter_Length<br>PAD<br>ecmstatetype | OCTETSTRING(SIZE(2)),<br>OCTETSTRING(SIZE(2)),<br>OCTETSTRING(SIZE(2)),<br>SMTECMStateType | } |

| ASN.1 Type Definition | | | |
|---|---|---|---|
| **Type Name :** SMTCF_State<br>**Comments :** | | | |
| **Type Definition** | | | |
| SEQUENCE | {Parameter_Type<br>Parameter_Length<br>PAD<br>cfstatetype | OCTETSTRING(SIZE(2)),<br>OCTETSTRING(SIZE(2)),<br>OCTETSTRING(SIZE(2)),<br>SMTCF_StateType | } |

| ASN.1 Type Definition | | | |
|---|---|---|---|
| **Type Name :** SMTHoldState<br>**Comments :** | | | |
| **Type Definition** | | | |
| SEQUENCE | {Parameter_Type<br>Parameter_Length<br>PAD<br>holdstatetype | OCTETSTRING(SIZE(2)),<br>OCTETSTRING(SIZE(2)),<br>OCTETSTRING(SIZE(2)),<br>SMTHoldStateType | } |

| ASN.1 Type Definition | | | |
|---|---|---|---|
| **Type Name :** SMTRemoteDisconnectFlag<br>**Comments :** | | | |
| **Type Definition** | | | |
| SEQUENCE | {Parameter_Type<br>Parameter_Length<br>PAD<br>remotedisconnectflagtype | OCTETSTRING(SIZE(2)),<br>OCTETSTRING(SIZE(2)),<br>OCTETSTRING(SIZE(3)),<br>CMNFlag DEFAULT FALSE | } |


Copyright International Organization for Standardization
Provided by IHS under license with ISO
No reproduction or networking permitted without license from IHS
Not for Resale

| ASN.1 Type Definition | | |
|---|---|---|
| **Type Name :** SMTStationStatus<br>**Comments :** | | |
| **Type Definition** | | |
| SEQUENCE | {Parameter_Type<br>Parameter_Length<br>PAD<br>stationstatustype | OCTETSTRING(SIZE(2)),<br>OCTETSTRING(SIZE(2)),<br>OCTETSTRING(SIZE(2)),<br>SMTStatus } |

| ASN.1 Type Definition | | |
|---|---|---|
| **Type Name :** SMTPeerWrapFlag<br>**Comments :** | | |
| **Type Definition** | | |
| SEQUENCE | {Parameter_Type<br>Parameter_Length<br>PAD<br>peerwrapflagtype | OCTETSTRING(SIZE(2)),<br>OCTETSTRING(SIZE(2)),<br>OCTETSTRING(SIZE(3)),<br>CMNFlag DEFAULT FALSE } |

#### 9.2.1.1.4 SMT MIB Operation Group Attributes

| ASN.1 Type Definition | | |
|---|---|---|
| **Type Name :** SMTMIBOperation_Group<br>**Comments :** | | |
| **Type Definition** | | |
| SET | {timestamp<br>transitiontimestamp<br>setcount<br>lastsetstationid | SMTTimeStamp,<br>SMTTransitionTimeStamp,<br>SMTSetCount OPTIONAL,<br>SMTLastSetStationId OPTIONAL } |

| ASN.1 Type Definition | | |
|---|---|---|
| **Type Name :** SMTTimeStamp<br>**Comments :** | | |
| **Type Definition** | | |
| SEQUENCE | {Parameter_Type<br>Parameter_Length<br>timestamptype | OCTETSTRING(SIZE(2)),<br>OCTETSTRING(SIZE(2)),<br>SMTTimeStampType } |



Copyright International Organization for Standardization
Provided by IHS under license with ISO
No reproduction or networking permitted without license from IHS
Not for Resale

| ASN.1 Type Definition | | |
|---|---|---|
| **Type Name :** SMTTransitionTimeStamp<br>**Comments :** | | |
| **Type Definition** | | |
| SEQUENCE | {Parameter_Type | OCTETSTRING(SIZE(2)), |
| | Parameter_Length | OCTETSTRING(SIZE(2)), |
| | transitiontimestamptype | CMNTimeStampType } |

| ASN.1 Type Definition | | |
|---|---|---|
| **Type Name :** SMTSetCount<br>**Comments :** | | |
| **Type Definition** | | |
| SEQUENCE | {Parameter_Type | OCTETSTRING(SIZE(2)), |
| | Parameter_Length | OCTETSTRING(SIZE(2)), |
| | PAD | OCTETSTRING(SIZE(2)), |
| | setcounttype | SMTSetCountType } |

| ASN.1 Type Definition | | |
|---|---|---|
| **Type Name :** SMTLastSetStationId<br>**Comments :** | | |
| **Type Definition** | | |
| SEQUENCE | {Parameter_Type | OCTETSTRING(SIZE(2)), |
| | Parameter_Length | OCTETSTRING(SIZE(2)), |
| | PAD | OCTETSTRING(SIZE(2)), |
| | lastsetstationidtype | SMTStationIdentifierType } |

| ASN.1 Type Definition | | |
|---|---|---|
| **Type Name :** SMTVendorAttrib<br>**Comments :** | | |
| **Type Definition** | | |
| SEQUENCE | {Parameter_Type | OCTETSTRING(SIZE(2)), |
| | Parameter_Length | OCTETSTRING(SIZE(2)), |
| | PAD | OCTETSTRING(SIZE(?)), |
| | vendormibtype | CMNVendorMIBType } |


Copyright International Organization for Standardization
Provided by IHS under license with ISO
No reproduction or networking permitted without license from IHS
Not for Resale

### 9.2.1.2 ASN.1 Type Definitions for MAC Attributes

#### 9.2.1.2.1 MAC Capabilities Group Attributes

| ASN.1 Type Definition | | |
|---|---|---|
| **Type Name :** MACCapabilities_Group<br>**Comments :** | | |
| **Type Definition** | | |
| SET {framestatusfunctions<br>bridgefunctions<br>tmaxcapability<br>tvxcapability | MACFrameStatusFunctions,<br>MACBridgeFunctions OPTIONAL,<br>MACT_MaxCapability,<br>MACTVXCapability } | |

| ASN.1 Type Definition | | |
|---|---|---|
| **Type Name :** MACFrameStatusFunctions<br>**Comments :** | | |
| **Type Definition** | | |
| SEQUENCE {Parameter_Type<br>Parameter_Length<br>PAD<br>macindex<br>PAD<br>framestatusfunctionstype | OCTETSTRING(SIZE(2)),<br>OCTETSTRING(SIZE(2)),<br>OCTETSTRING(SIZE(2))<br>OCTETSTRING(SIZE(2)),<br>OCTETSTRING(SIZE(2)),<br>MACFS_Functions | } |

| ASN.1 Type Definition | | |
|---|---|---|
| **Type Name :** MACBridgeFunctions<br>**Comments :** | | |
| **Type Definition** | | |
| SEQUENCE {Parameter_Type<br>Parameter_Length<br>PAD<br>macindex<br>PAD<br>bridgefunctionstype | OCTETSTRING(SIZE(2)),<br>OCTETSTRING(SIZE(2)),<br>OCTETSTRING(SIZE(2))<br>OCTETSTRING(SIZE(2)),<br>OCTETSTRING(SIZE(2)),<br>MACBridgeType | } |



Copyright International Organization for Standardization
Provided by IHS under license with ISO
No reproduction or networking permitted without license from IHS
Not for Resale

| ASN.1 Type Definition | | |
|---|---|---|
| **Type Name :** MACT_MaxCapability<br>**Comments :** | | |
| **Type Definition** | | |
| SEQUENCE {Parameter_Type | | OCTETSTRING(SIZE(2)), |
| Parameter_Length | | OCTETSTRING(SIZE(2)), |
| PAD | | OCTETSTRING(SIZE(2)) |
| macindex | | OCTETSTRING(SIZE(2)), |
| tmaxcapabilitytype | | CMNTwosComplementType } |

| ASN.1 Type Definition | | |
|---|---|---|
| **Type Name :** MACTVXCapability<br>**Comments :** | | |
| **Type Definition** | | |
| SEQUENCE {Parameter_Type | | OCTETSTRING(SIZE(2)), |
| Parameter_Length | | OCTETSTRING(SIZE(2)), |
| PAD | | OCTETSTRING(SIZE(2)) |
| macindex | | OCTETSTRING(SIZE(2)), |
| tvxcapabilitytype | | CMNTwosComplementType } |

### 9.2.1.2.2 MAC Configuration Group Attributes

| ASN.1 Type Definition | |
|---|---|
| **Type Name :** MACConfig_Group<br>**Comments :** | |
| **Type Definition** | |
| SET {availablepaths | MACAvailablePaths, |
| currentpath | MACCurrentPath, |
| upstreamnbr | MACUpstreamNbr |
| downstreamnbr | MACDownstreamNbr, |
| oldupstreamnbr | MACOldUpstreamNbr, |
| olddownstreamnbr | MACOldDownstreamNbr, |
| dupaddresstest | MACDupAddressTest, |
| requestedpaths | MACRequestedPaths, |
| downstreamporttype | MACDownstreamPORTType, |
| macindex | MACIndex } |


Copyright International Organization for Standardization
Provided by IHS under license with ISO
No reproduction or networking permitted without license from IHS
Not for Resale

| ASN.1 Type Definition | | | |
|---|---|---|---|
| **Type Name :** MACAvailablePaths<br>**Comments :** | | | |
| **Type Definition** | | | |
| SEQUENCE | {Parameter_Type | OCTETSTRING(SIZE(2)), | |
| | Parameter_Length | OCTETSTRING(SIZE(2)), | |
| | PAD | OCTETSTRING(SIZE(2)) | |
| | macindex | OCTETSTRING(SIZE(2)), | |
| | PAD | OCTETSTRING(SIZE(3)), | |
| | availablepathstype | CMNAvailablePathsType | } |

| ASN.1 Type Definition | | | |
|---|---|---|---|
| **Type Name :** MACCurrentPath<br>**Comments :** | | | |
| **Type Definition** | | | |
| SEQUENCE | {Parameter_Type | OCTETSTRING(SIZE(2)), | |
| | Parameter_Length | OCTETSTRING(SIZE(2)), | |
| | PAD | OCTETSTRING(SIZE(2)) | |
| | macindex | OCTETSTRING(SIZE(2)), | |
| | PAD | OCTETSTRING(SIZE(2)), | |
| | currentpathtype | CMNCurrentPathType | } |

| ASN.1 Type Definition | | | |
|---|---|---|---|
| **Type Name :** MACUpstreamNbr<br>**Comments :** | | | |
| **Type Definition** | | | |
| SEQUENCE | {Parameter_Type | OCTETSTRING(SIZE(2)), | |
| | Parameter_Length | OCTETSTRING(SIZE(2)), | |
| | PAD | OCTETSTRING(SIZE(2)) | |
| | macindex | OCTETSTRING(SIZE(2)), | |
| | PAD | OCTETSTRING(SIZE(2)), | |
| | upstreamnbrtype | CMNLongAddressType | } |



--`,,```,,,,````-`-`,,`,,`,`,,`---
Copyright International Organization for Standardization
Provided by IHS under license with ISO
No reproduction or networking permitted without license from IHS
Not for Resale

| ASN.1 Type Definition | | | |
|---|---|---|---|
| **Type Name :** MACDownstreamNbr<br>**Comments :** | | | |
| **Type Definition** | | | |
| SEQUENCE | {Parameter_Type | OCTETSTRING(SIZE(2)), | |
| | Parameter_Length | OCTETSTRING(SIZE(2)), | |
| | PAD | OCTETSTRING(SIZE(2)) | |
| | macindex | OCTETSTRING(SIZE(2)), | |
| | PAD | OCTETSTRING(SIZE(2)), | |
| | downstreamnbrtype | CMNLongAddressType | } |

| ASN.1 Type Definition | | | |
|---|---|---|---|
| **Type Name :** MACOldUpstreamNbr<br>**Comments :** | | | |
| **Type Definition** | | | |
| SEQUENCE | {Parameter_Type | OCTETSTRING(SIZE(2)), | |
| | Parameter_Length | OCTETSTRING(SIZE(2)), | |
| | PAD | OCTETSTRING(SIZE(2)) | |
| | macindex | OCTETSTRING(SIZE(2)), | |
| | PAD | OCTETSTRING(SIZE(2)), | |
| | oldupstreamnbrtype | CMNLongAddressType | } |

| ASN.1 Type Definition | | | |
|---|---|---|---|
| **Type Name :** MACOldDownstreamNbr<br>**Comments :** | | | |
| **Type Definition** | | | |
| SEQUENCE | {Parameter_Type | OCTETSTRING(SIZE(2)), | |
| | Parameter_Length | OCTETSTRING(SIZE(2)), | |
| | PAD | OCTETSTRING(SIZE(2)) | |
| | macindex | OCTETSTRING(SIZE(2)), | |
| | PAD | OCTETSTRING(SIZE(2)), | |
| | olddownstreamnbrtype | CMNLongAddressType | } |

--`,,```,,,,````-`-`,,`,,`,`,,`---



Copyright International Organization for Standardization
Provided by IHS under license with ISO
No reproduction or networking permitted without license from IHS
Not for Resale

| ASN.1 Type Definition | | |
|---|---|---|
| **Type Name :** MACDupAddressTest<br>**Comments :** | | |
| **Type Definition** | | |
| SEQUENCE {Parameter_Type | OCTETSTRING(SIZE(2)), | |
| Parameter_Length | OCTETSTRING(SIZE(2)), | |
| PAD | OCTETSTRING(SIZE(2)) | |
| macindex | OCTETSTRING(SIZE(2)), | |
| PAD | OCTETSTRING(SIZE(2)), | |
| dupaddresstesttype | MACDupAddressTestType | } |

| ASN.1 Type Definition | | |
|---|---|---|
| **Type Name :** MACRequestedPaths<br>**Comments :** | | |
| **Type Definition** | | |
| SEQUENCE {Parameter_Type | OCTETSTRING(SIZE(2)), | |
| Parameter_Length | OCTETSTRING(SIZE(2)), | |
| PAD | OCTETSTRING(SIZE(2)) | |
| macindex | OCTETSTRING(SIZE(2)), | |
| PAD | OCTETSTRING(SIZE(3)), | |
| requestedpathstype | CMNPermittedPathsType | } |

| ASN.1 Type Definition | | |
|---|---|---|
| **Type Name :** MACDownstreamPORTType<br>**Comments :** | | |
| **Type Definition** | | |
| SEQUENCE {Parameter_Type | OCTETSTRING(SIZE(2)), | |
| Parameter_Length | OCTETSTRING(SIZE(2)), | |
| PAD | OCTETSTRING(SIZE(2)) | |
| macindex | OCTETSTRING(SIZE(2)), | |
| PAD | OCTETSTRING(SIZE(2)), | |
| downstreamporttype | CMNPortType | } |



Copyright International Organization for Standardization
Provided by IHS under license with ISO
No reproduction or networking permitted without license from IHS
Not for Resale

| ASN.1 Type Definition | | | |
|---|---|---|---|
| **Type Name :** MACIndex<br>**Comments :** | | | |
| **Type Definition** | | | |
| SEQUENCE | {Parameter_Type | OCTETSTRING(SIZE(2)), | |
| | Parameter_Length | OCTETSTRING(SIZE(2)), | |
| | PAD | OCTETSTRING(SIZE(2)) | |
| | macindex | OCTETSTRING(SIZE(2)), | |
| | PAD | OCTETSTRING(SIZE(2)), | |
| | macindextype | CMNResourceIdType | } |

### 9.2.1.2.3 MAC Address Group Attributes

| ASN.1 Type Definition | | | |
|---|---|---|---|
| **Type Name :** MACAddress_Group<br>**Comments :** | | | |
| **Type Definition** | | | |
| SET | {smtaddress | MACSMTAddress, | |
| | longgrpaddress | MACLongGrpAddress OPTIONAL, | |
| | shortgrpaddress | MACShortGrpAddress OPTIONAL | } |

| ASN.1 Type Definition | | | |
|---|---|---|---|
| **Type Name :** MACSMTAddress<br>**Comments :** | | | |
| **Type Definition** | | | |
| SEQUENCE | {Parameter_Type | OCTETSTRING(SIZE(2)), | |
| | Parameter_Length | OCTETSTRING(SIZE(2)), | |
| | PAD | OCTETSTRING(SIZE(2)) | |
| | macindex | OCTETSTRING(SIZE(2)), | |
| | PAD | OCTETSTRING(SIZE(2)), | |
| | smtaddresstype | CMNLongAddressType | } |


Copyright International Organization for Standardization
Provided by IHS under license with ISO
No reproduction or networking permitted without license from IHS
Not for Resale

| ASN.1 Type Definition | | |
|---|---|---|
| **Type Name :** MACLongGrpAddress<br>**Comments :** | | |
| **Type Definition** | | |
| SEQUENCE {Parameter_Type | OCTETSTRING(SIZE(2)), | |
| Parameter_Length | OCTETSTRING(SIZE(2)), | |
| PAD | OCTETSTRING(SIZE(2)) | |
| macindex | OCTETSTRING(SIZE(2)), | |
| PAD | OCTETSTRING(SIZE(2)), | |
| longgrpaddresstype | SET OF CMNLongAddressType | } |

| ASN.1 Type Definition | | |
|---|---|---|
| **Type Name :** MACShortGrpAddress<br>**Comments :** | | |
| **Type Definition** | | |
| SEQUENCE {Parameter_Type | OCTETSTRING(SIZE(2)), | |
| Parameter_Length | OCTETSTRING(SIZE(2)), | |
| PAD | OCTETSTRING(SIZE(2)) | |
| macindex | OCTETSTRING(SIZE(2)), | |
| PAD | OCTETSTRING(SIZE(2)), | |
| shortgrpaddresstype | SET OF MACShortAddressType} | |

#### 9.2.1.2.4 MAC Operation Group Attributes

| ASN.1 Type Definition | | |
|---|---|---|
| **Type Name :** MACOperation_Group<br>**Comments :** | | |
| **Type Definition** | | |
| SET {treq | MACT_Req, | |
| tneg | MACT_Neg, | |
| tmax | MACT_Max, | |
| tvxvalue | MACTvxValue, | |
| tpri0 | MACT_Pri0 OPTIONAL | |
| tpri1 | MACT_Pri1 OPTIONAL | |
| tpri2 | MACT_Pri2 OPTIONAL | |
| tpri3 | MACT_Pri3 OPTIONAL | |
| tpri4 | MACT_Pri4 OPTIONAL | |
| tpri5 | MACT_Pri5 OPTIONAL | |
| tpri6 | MACT_Pri6 OPTIONAL | } |



Copyright International Organization for Standardization
Provided by IHS under license with ISO
No reproduction or networking permitted without license from IHS
Not for Resale

| ASN.1 Type Definition | | |
|---|---|---|
| **Type Name :** MACT_Req<br>**Comments :** | | |
| **Type Definition** | | |
| SEQUENCE | {Parameter_Type | OCTETSTRING(SIZE(2)), |
| | Parameter_Length | OCTETSTRING(SIZE(2)), |
| | PAD | OCTETSTRING(SIZE(2)) |
| | macindex | OCTETSTRING(SIZE(2)), |
| | treqtype | MACTReqType } |

| ASN.1 Type Definition | | |
|---|---|---|
| **Type Name :** MACT_Neg<br>**Comments :** | | |
| **Type Definition** | | |
| SEQUENCE | {Parameter_Type | OCTETSTRING(SIZE(2)), |
| | Parameter_Length | OCTETSTRING(SIZE(2)), |
| | PAD | OCTETSTRING(SIZE(2)) |
| | macindex | OCTETSTRING(SIZE(2)), |
| | tnegtype | MACT_NegType } |

| ASN.1 Type Definition | | |
|---|---|---|
| **Type Name :** MACT_Max<br>**Comments :** | | |
| **Type Definition** | | |
| SEQUENCE | {Parameter_Type | OCTETSTRING(SIZE(2)), |
| | Parameter_Length | OCTETSTRING(SIZE(2)), |
| | PAD | OCTETSTRING(SIZE(2)) |
| | macindex | OCTETSTRING(SIZE(2)), |
| | tmaxtype | MACTMaxType } |

| ASN.1 Type Definition | | |
|---|---|---|
| **Type Name :** MACTvxValue<br>**Comments :** | | |
| **Type Definition** | | |
| SEQUENCE | {Parameter_Type | OCTETSTRING(SIZE(2)), |
| | Parameter_Length | OCTETSTRING(SIZE(2)), |
| | PAD | OCTETSTRING(SIZE(2)) |
| | macindex | OCTETSTRING(SIZE(2)), |
| | tvxvaluetype | MACTVXValueType } |



Copyright International Organization for Standardization
Provided by IHS under license with ISO
No reproduction or networking permitted without license from IHS
Not for Resale

| ASN.1 Type Definition | | |
|---|---|---|
| **Type Name :** MACT_Pri0<br>**Comments :** | | |
| **Type Definition** | | |
| SEQUENCE | {Parameter_Type | OCTETSTRING(SIZE(2)), |
| | Parameter_Length | OCTETSTRING(SIZE(2)), |
| | PAD | OCTETSTRING(SIZE(2)) |
| | macindex | OCTETSTRING(SIZE(2)), |
| | tpri0type | MACT_Pri0Type } |

| ASN.1 Type Definition | | |
|---|---|---|
| **Type Name :** MACT_Pri1<br>**Comments :** | | |
| **Type Definition** | | |
| SEQUENCE | {Parameter_Type | OCTETSTRING(SIZE(2)), |
| | Parameter_Length | OCTETSTRING(SIZE(2)), |
| | PAD | OCTETSTRING(SIZE(2)) |
| | macindex | OCTETSTRING(SIZE(2)), |
| | tpri1type | MACT_Pri1Type } |

| ASN.1 Type Definition | | |
|---|---|---|
| **Type Name :** MACT_Pri2<br>**Comments :** | | |
| **Type Definition** | | |
| SEQUENCE | {Parameter_Type | OCTETSTRING(SIZE(2)), |
| | Parameter_Length | OCTETSTRING(SIZE(2)), |
| | PAD | OCTETSTRING(SIZE(2)) |
| | macindex | OCTETSTRING(SIZE(2)), |
| | tpri2type | MACT_Pri2Type } |

| ASN.1 Type Definition | | |
|---|---|---|
| **Type Name :** MACT_Pri3<br>**Comments :** | | |
| **Type Definition** | | |
| SEQUENCE | {Parameter_Type | OCTETSTRING(SIZE(2)), |
| | Parameter_Length | OCTETSTRING(SIZE(2)), |
| | PAD | OCTETSTRING(SIZE(2)) |
| | macindex | OCTETSTRING(SIZE(2)), |
| | tpri3type | MACT_Pri3Type } |



Copyright International Organization for Standardization
Provided by IHS under license with ISO
No reproduction or networking permitted without license from IHS
Not for Resale

| ASN.1 Type Definition | | |
|---|---|---|
| **Type Name :** MACT_Pri4<br>**Comments :** | | |
| **Type Definition** | | |
| SEQUENCE | {Parameter_Type | OCTETSTRING(SIZE(2)), |
| | Parameter_Length | OCTETSTRING(SIZE(2)), |
| | PAD | OCTETSTRING(SIZE(2)) |
| | macindex | OCTETSTRING(SIZE(2)), |
| | tpri4type | MACT_Pri4Type } |

| ASN.1 Type Definition | | |
|---|---|---|
| **Type Name :** MACT_Pri5<br>**Comments :** | | |
| **Type Definition** | | |
| SEQUENCE | {Parameter_Type | OCTETSTRING(SIZE(2)), |
| | Parameter_Length | OCTETSTRING(SIZE(2)), |
| | PAD | OCTETSTRING(SIZE(2)) |
| | macindex | OCTETSTRING(SIZE(2)), |
| | tpri5type | MACT_Pri5Type } |

| ASN.1 Type Definition | | |
|---|---|---|
| **Type Name :** MACT_Pri6<br>**Comments :** | | |
| **Type Definition** | | |
| SEQUENCE | {Parameter_Type | OCTETSTRING(SIZE(2)), |
| | Parameter_Length | OCTETSTRING(SIZE(2)), |
| | PAD | OCTETSTRING(SIZE(2)) |
| | macindex | OCTETSTRING(SIZE(2)), |
| | tpri6type | MACT_Pri6Type } |

--`,,```,,,,````-`-`,,`,,`,`,,`---



Copyright International Organization for Standardization
Provided by IHS under license with ISO
No reproduction or networking permitted without license from IHS
Not for Resale

#### 9.2.1.2.5 MAC Counters Group Attributes

| ASN.1 Type Definition | | |
|---|---|---|
| **Type Name :** MACCounters_Group<br>**Comments :** | | |
| **Type Definition** | | |
| SET | {framect | MACFrame_Ct, |
| | copiedct | MACCopied_Ct, |
| | transmitct | MACTransmit_Ct, |
| | tokenct | MACToken_Ct OPTIONAL, |
| | errorct | MACError_Ct, |
| | lostct | MACLost_Ct, |
| | tvxespiredct | MACTvxExpired_Ct OPTIONAL, |
| | notcopiedct | MACNotCopied_Ct OPTIONAL, |
| | latect | MACLate_Ct OPTIONAL, |
| | ringopct | MACRingOp_Ct OPTIONAL } |

| ASN.1 Type Definition | | |
|---|---|---|
| **Type Name :** MACFrame_Ct<br>**Comments :** | | |
| **Type Definition** | | |
| SEQUENCE | {Parameter_Type | OCTETSTRING(SIZE(2)), |
| | Parameter_Length | OCTETSTRING(SIZE(2)), |
| | PAD | OCTETSTRING(SIZE(2)) |
| | macindex | OCTETSTRING(SIZE(2)), |
| | framecttype | MACFrame_CtType } |

| ASN.1 Type Definition | | |
|---|---|---|
| **Type Name :** MACCopied_Ct<br>**Comments :** | | |
| **Type Definition** | | |
| SEQUENCE | {Parameter_Type | OCTETSTRING(SIZE(2)), |
| | Parameter_Length | OCTETSTRING(SIZE(2)), |
| | PAD | OCTETSTRING(SIZE(2)) |
| | macindex | OCTETSTRING(SIZE(2)), |
| | copiedcttype | MACCopied_CtType } |



Copyright International Organization for Standardization
Provided by IHS under license with ISO
No reproduction or networking permitted without license from IHS
Not for Resale

| ASN.1 Type Definition | | |
|---|---|---|
| **Type Name :** MACTransmit_Ct<br>**Comments :** | | |
| **Type Definition** | | |
| SEQUENCE | {Parameter_Type | OCTETSTRING(SIZE(2)), |
| | Parameter_Length | OCTETSTRING(SIZE(2)), |
| | PAD | OCTETSTRING(SIZE(2)) |
| | macindex | OCTETSTRING(SIZE(2)), |
| | transmitcttype | MACTransmit_CtType } |

| ASN.1 Type Definition | | |
|---|---|---|
| **Type Name :** MACToken_Ct<br>**Comments :** | | |
| **Type Definition** | | |
| SEQUENCE | {Parameter_Type | OCTETSTRING(SIZE(2)), |
| | Parameter_Length | OCTETSTRING(SIZE(2)), |
| | PAD | OCTETSTRING(SIZE(2)) |
| | macindex | OCTETSTRING(SIZE(2)), |
| | tokencttype | MACToken_CtType } |

| ASN.1 Type Definition | | |
|---|---|---|
| **Type Name :** MACError_Ct<br>**Comments :** | | |
| **Type Definition** | | |
| SEQUENCE | {Parameter_Type | OCTETSTRING(SIZE(2)), |
| | Parameter_Length | OCTETSTRING(SIZE(2)), |
| | PAD | OCTETSTRING(SIZE(2)) |
| | macindex | OCTETSTRING(SIZE(2)), |
| | errorcttype | MACError_CtType } |


Copyright International Organization for Standardization
Provided by IHS under license with ISO
No reproduction or networking permitted without license from IHS
Not for Resale

| ASN.1 Type Definition | | |
|---|---|---|
| **Type Name :** MACLost_Ct<br>**Comments :** | | |
| **Type Definition** | | |
| SEQUENCE | {Parameter_Type | OCTETSTRING(SIZE(2)), |
| | Parameter_Length | OCTETSTRING(SIZE(2)), |
| | PAD | OCTETSTRING(SIZE(2)) |
| | macindex | OCTETSTRING(SIZE(2)), |
| | lostcttype | MACLost_CtType } |

| ASN.1 Type Definition | | |
|---|---|---|
| **Type Name :** MACTvxExpired_Ct<br>**Comments :** | | |
| **Type Definition** | | |
| SEQUENCE | {Parameter_Type | OCTETSTRING(SIZE(2)), |
| | Parameter_Length | OCTETSTRING(SIZE(2)), |
| | PAD | OCTETSTRING(SIZE(2)) |
| | macindex | OCTETSTRING(SIZE(2)), |
| | tvxexpiredcttype | MACTvxExpired_CtType } |

| ASN.1 Type Definition | | |
|---|---|---|
| **Type Name :** MACNotCopied_Ct<br>**Comments :** | | |
| **Type Definition** | | |
| SEQUENCE | {Parameter_Type | OCTETSTRING(SIZE(2)), |
| | Parameter_Length | OCTETSTRING(SIZE(2)), |
| | PAD | OCTETSTRING(SIZE(2)) |
| | macindex | OCTETSTRING(SIZE(2)), |
| | notcopiedcttype | MACNotCopied_CtType } |

| ASN.1 Type Definition | | |
|---|---|---|
| **Type Name :** MACLate_Ct<br>**Comments :** | | |
| **Type Definition** | | |
| SEQUENCE | {Parameter_Type | OCTETSTRING(SIZE(2)), |
| | Parameter_Length | OCTETSTRING(SIZE(2)), |
| | PAD | OCTETSTRING(SIZE(2)) |
| | macindex | OCTETSTRING(SIZE(2)), |
| | latecttype | MACLate_CtType } |

--`,,```,,,,````-`-`,,`,,`,`,,`---



Copyright International Organization for Standardization
Provided by IHS under license with ISO
No reproduction or networking permitted without license from IHS
Not for Resale

| ASN.1 Type Definition | | |
|---|---|---|
| **Type Name :** MACRingOp_Ct<br>**Comments :** | | |
| **Type Definition** | | |
| SEQUENCE {Parameter_Type<br>Parameter_Length<br>PAD<br>macindex<br>ringopcttype | OCTETSTRING(SIZE(2)),<br>OCTETSTRING(SIZE(2)),<br>OCTETSTRING(SIZE(2))<br>OCTETSTRING(SIZE(2)),<br>MACRingOp_CtType } | |

### 9.2.1.2.6 MAC Frame Error Condition Group Attributes

| ASN.1 Type Definition | | |
|---|---|---|
| **Type Name :** MACFrameErrorCondition_Group<br>**Comments :** | | |
| **Type Definition** | | |
| SET {frameerrorthreshold<br>frameerrorratio | MACFrameErrorThreshold,<br>MACFrameErrorRatio | } |

| ASN.1 Type Definition | | |
|---|---|---|
| **Type Name :** MACFrameErrorThreshold<br>**Comments :** | | |
| **Type Definition** | | |
| SEQUENCE {Parameter_Type<br>Parameter_Length<br>PAD<br>macindex<br>PAD<br>frameerrorthresholdtype | OCTETSTRING(SIZE(2)),<br>OCTETSTRING(SIZE(2)),<br>OCTETSTRING(SIZE(2))<br>OCTETSTRING(SIZE(2)),<br>OCTETSTRING(SIZE(2)),<br>MACFrameErrorThresholdType | } |

| ASN.1 Type Definition | | |
|---|---|---|
| **Type Name :** MACFrameErrorRatio<br>**Comments :** | | |
| **Type Definition** | | |
| SEQUENCE {Parameter_Type<br>Parameter_Length<br>PAD<br>macindex<br>PAD<br>frameerrorratiotype | OCTETSTRING(SIZE(2)),<br>OCTETSTRING(SIZE(2)),<br>OCTETSTRING(SIZE(2))<br>OCTETSTRING(SIZE(2)),<br>OCTETSTRING(SIZE(2)),<br>MACFrameErrorRatioType | } |


Copyright International Organization for Standardization
Provided by IHS under license with ISO
No reproduction or networking permitted without license from IHS
Not for Resale

### 9.2.1.2.7 MAC Not Copied Condition Group Attributes

| ASN.1 Type Definition | | | |
|---|---|---|---|
| **Type Name :** MACNotCopiedCondition_Group<br>**Comments :** | | | |
| **Type Definition** | | | |
| SET | {macnotcopiedthreshold<br>macnotcopiedratio | MACNotCopiedThreshold OPTIONAL,<br>MACNotCopiedRatio OPTIONAL | } |

| ASN.1 Type Definition | | | |
|---|---|---|---|
| **Type Name :** MACNotCopiedThreshold<br>**Comments :** | | | |
| **Type Definition** | | | |
| SEQUENCE | {Parameter_Type<br>Parameter_Length<br>PAD<br>macindex<br>PAD<br>notcopiedthresholdtype | OCTETSTRING(SIZE(2)),<br>OCTETSTRING(SIZE(2)),<br>OCTETSTRING(SIZE(2))<br>OCTETSTRING(SIZE(2)),<br>OCTETSTRING(SIZE(2)),<br>MACNotCopiedThresholdType | } |

| ASN.1 Type Definition | | | |
|---|---|---|---|
| **Type Name :** MACNotCopiedRatio<br>**Comments :** | | | |
| **Type Definition** | | | |
| SEQUENCE | {Parameter_Type<br>Parameter_Length<br>PAD<br>macindex<br>PAD<br>notcopiedratiotype | OCTETSTRING(SIZE(2)),<br>OCTETSTRING(SIZE(2)),<br>OCTETSTRING(SIZE(2))<br>OCTETSTRING(SIZE(2)),<br>OCTETSTRING(SIZE(2)),<br>MACNotCopiedRatioType | } |

--`,,```,,,,````-`-`,,`,,`,`,,`---



Copyright International Organization for Standardization
Provided by IHS under license with ISO
No reproduction or networking permitted without license from IHS
Not for Resale

#### 9.2.1.2.8 MAC Status Group Attributes

| ASN.1 Type Definition | | |
|---|---|---|
| **Type Name :** MACStatus_Group<br>**Comments :** | | |
| **Type Definition** | | |
| SET {rmtstate | MACRMTState, | |
| daflag | MACDA_Flag, | |
| undaflag | MACUNDA_Flag, | |
| frameerrorflag | MACFrameErrorFlag, | |
| notcopiedflag | MACNotCopiedFlag OPTIONAL | |
| unitdataavailable | MACUnitDataAvailable, | |
| hardwarepresent | MACHardwarePresent, | |
| maunitdataavailable | MACMA_UnitdataEnable } | |

| ASN.1 Type Definition | | |
|---|---|---|
| **Type Name :** MACRMTState<br>**Comments :** | | |
| **Type Definition** | | |
| SEQUENCE {Parameter_Type | OCTETSTRING(SIZE(2)), | |
| Parameter_Length | OCTETSTRING(SIZE(2)), | |
| PAD | OCTETSTRING(SIZE(2)) | |
| macindex | OCTETSTRING(SIZE(2)), | |
| PAD | OCTETSTRING(SIZE(2)), | |
| rmtstatetype | MACRMTStateType } | |

| ASN.1 Type Definition | | |
|---|---|---|
| **Type Name :** MACDA_Flag<br>**Comments :** | | |
| **Type Definition** | | |
| SEQUENCE {Parameter_Type | OCTETSTRING(SIZE(2)), | |
| Parameter_Length | OCTETSTRING(SIZE(2)), | |
| PAD | OCTETSTRING(SIZE(2)) | |
| macindex | OCTETSTRING(SIZE(2)), | |
| PAD | OCTETSTRING(SIZE(3)), | |
| daflagtype | MACDA_FlagType DEFAULT FALSE } | |


Copyright International Organization for Standardization
Provided by IHS under license with ISO
No reproduction or networking permitted without license from IHS
Not for Resale

| ASN.1 Type Definition | | |
|---|---|---|
| **Type Name :** MACUNDA_Flag<br>**Comments :** | | |
| **Type Definition** | | |
| SEQUENCE | {Parameter_Type | OCTETSTRING(SIZE(2)), |
| | Parameter_Length | OCTETSTRING(SIZE(2)), |
| | PAD | OCTETSTRING(SIZE(2)) |
| | macindex | OCTETSTRING(SIZE(2)), |
| | PAD | OCTETSTRING(SIZE(3)) |
| | undaflagtype | MACUNDA_Flag DEFAULT FALSE } |

| ASN.1 Type Definition | | |
|---|---|---|
| **Type Name :** MACFrameErrorFlag<br>**Comments :** | | |
| **Type Definition** | | |
| SEQUENCE | {Parameter_Type | OCTETSTRING(SIZE(2)), |
| | Parameter_Length | OCTETSTRING(SIZE(2)), |
| | PAD | OCTETSTRING(SIZE(2)) |
| | macindex | OCTETSTRING(SIZE(2)), |
| | PAD | OCTETSTRING(SIZE(3)), |
| | frameerrorflagtype | MACFrameErrorFlagType DEFAULT FALSE } |

| ASN.1 Type Definition | | |
|---|---|---|
| **Type Name :** MACNotCopiedFlag<br>**Comments :** | | |
| **Type Definition** | | |
| SEQUENCE | {Parameter_Type | OCTETSTRING(SIZE(2)), |
| | Parameter_Length | OCTETSTRING(SIZE(2)), |
| | PAD | OCTETSTRING(SIZE(2)) |
| | macindex | OCTETSTRING(SIZE(2)), |
| | PAD | OCTETSTRING(SIZE(3)), |
| | notcopiedflagtype | MACNotCopiedFlagType DEFAULT FALSE } |



Copyright International Organization for Standardization
Provided by IHS under license with ISO
No reproduction or networking permitted without license from IHS
Not for Resale

| ASN.1 Type Definition | | |
|---|---|---|
| **Type Name :** MACMA_UnitdataAvailable<br>**Comments :** | | |
| **Type Definition** | | |
| SEQUENCE | {Parameter_Type | OCTETSTRING(SIZE(2)), |
| | Parameter_Length | OCTETSTRING(SIZE(2)), |
| | PAD | OCTETSTRING(SIZE(2)) |
| | macindex | OCTETSTRING(SIZE(2)), |
| | PAD | OCTETSTRING(SIZE(3)), |
| | maunitdataavailabletype | MACMA_UnitdataAvailableType DEFAULT FALSE } |

| ASN.1 Type Definition | | |
|---|---|---|
| **Type Name :** MACHardwarePresent<br>**Comments :** | | |
| **Type Definition** | | |
| SEQUENCE | {Parameter_Type | OCTETSTRING(SIZE(2)), |
| | Parameter_Length | OCTETSTRING(SIZE(2)), |
| | PAD_2 | OCTETSTRING(SIZE(2)) |
| | macindex | OCTETSTRING(SIZE(2)), |
| | PAD | OCTETSTRING(SIZE(2)), |
| | hwpresenttype | CMNPresent } |

| ASN.1 Type Definition | | |
|---|---|---|
| **Type Name :** MACMA_UnitdataEnable<br>**Comments :** | | |
| **Type Definition** | | |
| SEQUENCE | {Parameter_Type | OCTETSTRING(SIZE(2)), |
| | Parameter_Length | OCTETSTRING(SIZE(2)), |
| | PAD | OCTETSTRING(SIZE(2)) |
| | macindex | OCTETSTRING(SIZE(2)), |
| | PAD | OCTETSTRING(SIZE(3)), |
| | maunitdataenabletype | MACMA_UnitdataEnableType DEFAULT FALSE } |


Copyright International Organization for Standardization
Provided by IHS under license with ISO
No reproduction or networking permitted without license from IHS
Not for Resale

| ASN.1 Type Definition | | |
|---|---|---|
| **Type Name :** MACVendorAttrib<br>**Comments :** | | |
| **Type Definition** | | |
| SEQUENCE {Parameter_Type | OCTETSTRING(SIZE(2)), | |
| Parameter_Length | OCTETSTRING(SIZE(2)), | |
| PAD | OCTETSTRING(SIZE(2)) | |
| macindex | OCTETSTRING(SIZE(2)), | |
| PAD | OCTETSTRING(SIZE(1)), | |
| vendormibtype | CMNVendorMIBType | } |

### 9.2.1.3 ASN.1 Type Definitions for PATH Attributes

| ASN.1 Type Definition | | |
|---|---|---|
| **Type Name :** PATHConfig_Group<br>**Comments :** | | |
| **Type Definition** | | |
| SET {index | PATHIndex, | |
| ringlatency | PATHRingLatency OPTIONAL, | |
| tracestatus | PATHTraceStatus OPTIONAL, | |
| sbapayload | PATHSbaPayload OPTIONAL, | |
| sbaoverhead | PATHSbaOverhead OPTIONAL, | |
| configuration | PATHConfiguration, | |
| trmode | PATHT_Rmode OPTIONAL, | |
| sbaavailable | PATHSbaAvailable OPTIONAL, | |
| tvxlowerbound | PATHTVXLowerBound, | |
| tmaxlowerbound | PATHT_MaxLowerBound, | |
| maxtreq | PATHMaxT_Req | } |

| ASN.1 Type Definition | | |
|---|---|---|
| **Type Name :** PATHIndex<br>**Comments :** | | |
| **Type Definition** | | |
| SEQUENCE {Parameter_Type | OCTETSTRING(SIZE(2)), | |
| Parameter_Length | OCTETSTRING(SIZE(2)), | |
| PAD | OCTETSTRING(SIZE(2)) | |
| pathindex | OCTETSTRING(SIZE(2)), | |
| PAD | OCTETSTRING(SIZE(2)), | |
| indextype | PATHIndexType | } |



Copyright International Organization for Standardization
Provided by IHS under license with ISO
No reproduction or networking permitted without license from IHS
Not for Resale

| ASN.1 Type Definition | | |
|---|---|---|
| **Type Name :** PATHRingLatency<br>**Comments :** | | |
| **Type Definition** | | |
| SEQUENCE | {Parameter_Type | OCTETSTRING(SIZE(2)), |
| | Parameter_Length | OCTETSTRING(SIZE(2)), |
| | PAD | OCTETSTRING(SIZE(2)) |
| | pathindex | OCTETSTRING(SIZE(2)), |
| | ringlatencytype | CMNTime } |

| ASN.1 Type Definition | | |
|---|---|---|
| **Type Name :** PATHTraceStatus<br>**Comments :** | | |
| **Type Definition** | | |
| SEQUENCE | {Parameter_Type | OCTETSTRING(SIZE(2)), |
| | Parameter_Length | OCTETSTRING(SIZE(2)), |
| | PAD | OCTETSTRING(SIZE(2)) |
| | pathindex | OCTETSTRING(SIZE(2)), |
| | PAD | OCTETSTRING(SIZE(2)), |
| | tracestatustype | PATHTraceStatusType } |

| ASN.1 Type Definition | | |
|---|---|---|
| **Type Name :** PATHSbaPayload<br>**Comments :** | | |
| **Type Definition** | | |
| SEQUENCE | {Parameter_Type | OCTETSTRING(SIZE(2)), |
| | Parameter_Length | OCTETSTRING(SIZE(2)), |
| | PAD | OCTETSTRING(SIZE(2)) |
| | pathindex | OCTETSTRING(SIZE(2)), |
| | sbapayloadtype | PATHSbaPayloadType } |

| ASN.1 Type Definition | | |
|---|---|---|
| **Type Name :** PATHSbaOverhead<br>**Comments :** | | |
| **Type Definition** | | |
| SEQUENCE | {Parameter_Type | OCTETSTRING(SIZE(2)), |
| | Parameter_Length | OCTETSTRING(SIZE(2)), |
| | PAD | OCTETSTRING(SIZE(2)) |
| | pathindex | OCTETSTRING(SIZE(2)), |
| | sbaoverheadtype | PATHSbaOverheadType } |


Copyright International Organization for Standardization
Provided by IHS under license with ISO
No reproduction or networking permitted without license from IHS
Not for Resale

| ASN.1 Type Definition | | |
|---|---|---|
| **Type Name :** PATHConfiguration<br>**Comments :** | | |
| **Type Definition** | | |
| SEQUENCE | {Parameter_Type | OCTETSTRING(SIZE(2)), |
| | Parameter_Length | OCTETSTRING(SIZE(2)), |
| | PAD | OCTETSTRING(SIZE(2)) |
| | pathindex | OCTETSTRING(SIZE(2)), |
| | PAD | OCTETSTRING(SIZE(2)), |
| | configurationtype | CMNPathConfig } |

| ASN.1 Type Definition | | |
|---|---|---|
| **Type Name :** PATHT_Rmode<br>**Comments :** | | |
| **Type Definition** | | |
| SEQUENCE | {Parameter_Type | OCTETSTRING(SIZE(2)), |
| | Parameter_Length | OCTETSTRING(SIZE(2)), |
| | PAD | OCTETSTRING(SIZE(2)) |
| | pathindex | OCTETSTRING(SIZE(2)), |
| | PAD | OCTETSTRING(SIZE(2)), |
| | trmodetype | CMNTime } |

| ASN.1 Type Definition | | |
|---|---|---|
| **Type Name :** PATHSbaAvailable<br>**Comments :** | | |
| **Type Definition** | | |
| SEQUENCE | {Parameter_Type | OCTETSTRING(SIZE(2)), |
| | Parameter_Length | OCTETSTRING(SIZE(2)), |
| | PAD | OCTETSTRING(SIZE(2)) |
| | pathindex | OCTETSTRING(SIZE(2)), |
| | sbaavailabletype | PATHSbaAvailableType} |

| ASN.1 Type Definition | | |
|---|---|---|
| **Type Name :** PATHTVXLowerBound<br>**Comments :** | | |
| **Type Definition** | | |
| SEQUENCE | {Parameter_Type | OCTETSTRING(SIZE(2)), |
| | Parameter_Length | OCTETSTRING(SIZE(2)), |
| | PAD | OCTETSTRING(SIZE(2)) |
| | pathindex | OCTETSTRING(SIZE(2)), |
| | tvxlowerboundtype | CMNTwosComplementType } |

--`,,```,,,,````-`-`,,`,,`,`,,`---



Copyright International Organization for Standardization
Provided by IHS under license with ISO
No reproduction or networking permitted without license from IHS
Not for Resale

| ASN.1 Type Definition | | | |
|---|---|---|---|
| **Type Name :** PATHTT_MaxLowerBound<br>**Comments :** | | | |
| **Type Definition** | | | |
| SEQUENCE | {Parameter_Type | OCTETSTRING(SIZE(2)), | |
| | Parameter_Length | OCTETSTRING(SIZE(2)), | |
| | pathindex | OCTETSTRING(SIZE(4)), | |
| | tmaxlowerboundtype | CMNTwosComplementType | } |

| ASN.1 Type Definition | | | |
|---|---|---|---|
| **Type Name :** PATHMaxT_Req<br>**Comments :** | | | |
| **Type Definition** | | | |
| SEQUENCE | {Parameter_Type | OCTETSTRING(SIZE(2)), | |
| | Parameter_Length | OCTETSTRING(SIZE(2)), | |
| | PAD | OCTETSTRING(SIZE(2)) | |
| | pathindex | OCTETSTRING(SIZE(2)), | |
| | maxtreqtype | CMNTwosComplementType | } |

| ASN.1 Type Definition | | | |
|---|---|---|---|
| **Type Name :** PATHVendorAttrib<br>**Comments :** | | | |
| **Type Definition** | | | |
| SEQUENCE | {Parameter_Type | OCTETSTRING(SIZE(2)), | |
| | Parameter_Length | OCTETSTRING(SIZE(2)), | |
| | PAD | OCTETSTRING(SIZE(2)) | |
| | pathindex | OCTETSTRING(SIZE(2)), | |
| | PAD | OCTETSTRING(SIZE(1)), | |
| | vendormibtype | CMNVendorMIBType | } |

--`,,```,,,,````-`-`,,`,,`,`,,`---



Copyright International Organization for Standardization
Provided by IHS under license with ISO
No reproduction or networking permitted without license from IHS
Not for Resale

#### 9.2.1.4 ASN.1 Type Definitions for PORT Attributes

##### 9.2.1.4.1 PORT Configuration Group Attributes

| ASN.1 Type Definition |
|---|
| **Type Name :** PORTConfig_Group<br>**Comments :** |
| **Type Definition** |
| SET {mytype PORTMy_Type,<br>neighbortype PORTNeighborType,<br>connectionpolicies PORTConnectionPolicies,<br>macindicated PORTMACIndicated,<br>currentpath PORTCurrentPath,<br>requestedpath PORTRequestedPaths,<br>macplacement PORTMACPlacement,<br>availablepath PORTAvailablePaths,<br>macloopttime PORTMACLoop_Time OPTIONAL,<br>pmdclass PORTPMDClass,<br>connectioncapabilities PORTConnectionCapabilities,<br>index PORTIndex } |

| ASN.1 Type Definition |
|---|
| **Type Name :** PORTMy_Type<br>**Comments :** |
| **Type Definition** |
| SEQUENCE {Parameter_Type OCTETSTRING(SIZE(2)),<br>Parameter_Length OCTETSTRING(SIZE(2)),<br>PAD OCTETSTRING(SIZE(2))<br>portindex OCTETSTRING(SIZE(2)),<br>PAD OCTETSTRING(SIZE(2)),<br>mytype CMNPortType } |

| ASN.1 Type Definition |
|---|
| **Type Name :** PORTNeighbor_Type<br>**Comments :** |
| **Type Definition** |
| SEQUENCE {Parameter_Type OCTETSTRING(SIZE(2)),<br>Parameter_Length OCTETSTRING(SIZE(2)),<br>PAD OCTETSTRING(SIZE(2))<br>portindex OCTETSTRING(SIZE(2)),<br>PAD OCTETSTRING(SIZE(2)),<br>neighbortype CMNPortType } |



Copyright International Organization for Standardization
Provided by IHS under license with ISO
No reproduction or networking permitted without license from IHS
Not for Resale

| ASN.1 Type Definition | | | |
|---|---|---|---|
| **Type Name :** PORTConnectionPolicies<br>**Comments :** | | | |
| **Type Definition** | | | |
| SEQUENCE | {Parameter_Type | OCTETSTRING(SIZE(2)), | |
| | Parameter_Length | OCTETSTRING(SIZE(2)), | |
| | PAD | OCTETSTRING(SIZE(2)) | |
| | portindex | OCTETSTRING(SIZE(2)), | |
| | PAD | OCTETSTRING(SIZE(2)), | |
| | connectionpoliciestype | PORTConnectionPoliciesType | } |

| ASN.1 Type Definition | | | |
|---|---|---|---|
| **Type Name :** PORTMACIndicated<br>**Comments :** | | | |
| **Type Definition** | | | |
| SEQUENCE | {Parameter_Type | OCTETSTRING(SIZE(2)), | |
| | Parameter_Length | OCTETSTRING(SIZE(2)), | |
| | PAD | OCTETSTRING(SIZE(2)) | |
| | portindex | OCTETSTRING(SIZE(2)), | |
| | PAD | OCTETSTRING(SIZE(3)) | |
| | macindicatedtype | PORTMACIndicatedType | } |

| ASN.1 Type Definition | | | |
|---|---|---|---|
| **Type Name :** PORTCurrentPath<br>**Comments :** | | | |
| **Type Definition** | | | |
| SEQUENCE | {Parameter_Type | OCTETSTRING(SIZE(2)), | |
| | Parameter_Length | OCTETSTRING(SIZE(2)), | |
| | PAD | OCTETSTRING(SIZE(2)) | |
| | portindex | OCTETSTRING(SIZE(2)), | |
| | PAD | OCTETSTRING(SIZE(2)), | |
| | currentpathtype | CMNCurrentPathType | } |


Copyright International Organization for Standardization
Provided by IHS under license with ISO
No reproduction or networking permitted without license from IHS
Not for Resale

| ASN.1 Type Definition | | | |
|---|---|---|---|
| **Type Name :** PORTRequestedPaths<br>**Comments :** | | | |
| **Type Definition** | | | |
| SEQUENCE | {Parameter_Type | OCTETSTRING(SIZE(2)), | |
| | Parameter_Length | OCTETSTRING(SIZE(2)), | |
| | PAD | OCTETSTRING(SIZE(2)) | |
| | portindex | OCTETSTRING(SIZE(2)), | |
| | PAD | OCTETSTRING(SIZE(2)), | |
| | requestedpathstype | PORTRequestedPathsType | } |

| ASN.1 Type Definition | | | |
|---|---|---|---|
| **Type Name :** PORTMACPlacement<br>**Comments :** | | | |
| **Type Definition** | | | |
| SEQUENCE | {Parameter_Type | OCTETSTRING(SIZE(2)), | |
| | Parameter_Length | OCTETSTRING(SIZE(2)), | |
| | PAD | OCTETSTRING(SIZE(2)) | |
| | portindex | OCTETSTRING(SIZE(2)), | |
| | PAD | OCTETSTRING(SIZE(2)), | |
| | macplacementtype | CMNResourceIdType | } |

| ASN.1 Type Definition | | | |
|---|---|---|---|
| **Type Name :** PORTAvailablePaths<br>**Comments :** | | | |
| **Type Definition** | | | |
| SEQUENCE | {Parameter_Type | OCTETSTRING(SIZE(2)), | |
| | Parameter_Length | OCTETSTRING(SIZE(2)), | |
| | PAD | OCTETSTRING(SIZE(2)) | |
| | portindex | OCTETSTRING(SIZE(2)), | |
| | PAD | OCTETSTRING(SIZE(2)), | |
| | availablepathstype | CMNAvailablePathsType | } |



Copyright International Organization for Standardization
Provided by IHS under license with ISO
No reproduction or networking permitted without license from IHS
Not for Resale

| ASN.1 Type Definition | | |
|---|---|---|
| **Type Name :** PORTMACLoop_Time<br>**Comments :** | | |
| **Type Definition** | | |
| SEQUENCE {Parameter_Type | | OCTETSTRING(SIZE(2)), |
| Parameter_Length | | OCTETSTRING(SIZE(2)), |
| PAD | | OCTETSTRING(SIZE(2)) |
| portindex | | OCTETSTRING(SIZE(2)), |
| PAD | | OCTETSTRING(SIZE(2)), |
| maclooptimetype | | CMNTime } |

| ASN.1 Type Definition | | |
|---|---|---|
| **Type Name :** PORTPMDClass<br>**Comments :** | | |
| **Type Definition** | | |
| SEQUENCE {Parameter_Type | | OCTETSTRING(SIZE(2)), |
| Parameter_Length | | OCTETSTRING(SIZE(2)), |
| PAD | | OCTETSTRING(SIZE(2)) |
| portindex | | OCTETSTRING(SIZE(2)), |
| PAD | | OCTETSTRING(SIZE(2)), |
| pmdclasstype | | PORTPMDClassType } |

| ASN.1 Type Definition | | |
|---|---|---|
| **Type Name :** PORTConnectionCapabilities<br>**Comments :** | | |
| **Type Definition** | | |
| SEQUENCE {Parameter_Type | | OCTETSTRING(SIZE(2)), |
| Parameter_Length | | OCTETSTRING(SIZE(2)), |
| PAD | | OCTETSTRING(SIZE(2)) |
| portindex | | OCTETSTRING(SIZE(2)), |
| PAD | | OCTETSTRING(SIZE(2)), |
| connectioncapabilitiestype | | PORTConnectionPoliciesType } |


Copyright International Organization for Standardization
Provided by IHS under license with ISO
No reproduction or networking permitted without license from IHS
Not for Resale

| ASN.1 Type Definition | | | |
|---|---|---|---|
| **Type Name :** PORTIndex<br>**Comments :** | | | |
| **Type Definition** | | | |
| SEQUENCE | {Parameter_Type | OCTETSTRING(SIZE(2)), | |
| | Parameter_Length | OCTETSTRING(SIZE(2)), | |
| | PAD | OCTETSTRING(SIZE(2)) | |
| | portindex | OCTETSTRING(SIZE(2)), | |
| | PAD | OCTETSTRING(SIZE(2)), | |
| | portindextype | CMNResourceIdType | } |

#### 9.2.1.4.2 PORT Operation Group Attributes

| ASN.1 Type Definition | | | |
|---|---|---|---|
| **Type Name :** PORTOperation_Group<br>**Comments :** | | | |
| **Type Definition** | | | |
| SET | {maintls | PORTMaint_LS OPTIONAL, | |
| | bsflag | PORTBS_Flag, | |
| | pcls | PORTPC_LS OPTIONAL | } |

| ASN.1 Type Definition | | | |
|---|---|---|---|
| **Type Name :** PORTMaint_LS<br>**Comments :** | | | |
| **Type Definition** | | | |
| SEQUENCE | {Parameter_Type | OCTETSTRING(SIZE(2)), | |
| | Parameter_Length | OCTETSTRING(SIZE(2)), | |
| | PAD | OCTETSTRING(SIZE(2)) | |
| | portindex | OCTETSTRING(SIZE(2)), | |
| | PAD | OCTETSTRING(SIZE(2)), | |
| | maintlstype | PORTLineStateType | } |



Copyright International Organization for Standardization
Provided by IHS under license with ISO
No reproduction or networking permitted without license from IHS
Not for Resale

| ASN.1 Type Definition | | |
|---|---|---|
| **Type Name :** PORTBS_Flag<br>**Comments :** | | |
| **Type Definition** | | |
| SEQUENCE {Parameter_Type<br>Parameter_Length<br>PAD<br>portindex<br>PAD<br>bsflagtype | OCTETSTRING(SIZE(2)),<br>OCTETSTRING(SIZE(2)),<br>OCTETSTRING(SIZE(2))<br>OCTETSTRING(SIZE(2)),<br>OCTETSTRING(SIZE(2)),<br>CMNFlag DEFAULT FALSE } | |

| ASN.1 Type Definition | | |
|---|---|---|
| **Type Name :** PORTPC_LS<br>**Comments :** | | |
| **Type Definition** | | |
| SEQUENCE {Parameter_Type<br>Parameter_Length<br>PAD<br>portindex<br>PAD<br>pclstype | OCTETSTRING(SIZE(2)),<br>OCTETSTRING(SIZE(2)),<br>OCTETSTRING(SIZE(2))<br>OCTETSTRING(SIZE(2)),<br>OCTETSTRING(SIZE(2)),<br>PORTLineStateType } | |

### 9.2.1.4.3 PORT Error Counters Group Attributes

| ASN.1 Type Definition | | |
|---|---|---|
| **Type Name :** PORTErrorCtrs_Group<br>**Comments :** | | |
| **Type Definition** | | |
| SET {eberrorct<br>lctfailct | PORTEBError_Ct OPTIONAL,<br>PORTLCTFail_Ct } | |



Copyright International Organization for Standardization
Provided by IHS under license with ISO
No reproduction or networking permitted without license from IHS
Not for Resale

| ASN.1 Type Definition | | |
|---|---|---|
| **Type Name :** PORTEBError_Ct<br>**Comments :** | | |
| **Type Definition** | | |
| SEQUENCE {Parameter_Type<br>Parameter_Length<br>PAD<br>portindex<br>PAD<br>eberrorcttype | OCTETSTRING(SIZE(2)),<br>OCTETSTRING(SIZE(2)),<br>OCTETSTRING(SIZE(2))<br>OCTETSTRING(SIZE(2)),<br>OCTETSTRING(SIZE(2)),<br>CMNCounter } | |

| ASN.1 Type Definition | | |
|---|---|---|
| **Type Name :** PORTLCTFail_Ct<br>**Comments :** | | |
| **Type Definition** | | |
| SEQUENCE {Parameter_Type<br>Parameter_Length<br>PAD<br>portindex<br>PAD<br>lctfailcttype | OCTETSTRING(SIZE(2)),<br>OCTETSTRING(SIZE(2)),<br>OCTETSTRING(SIZE(2))<br>OCTETSTRING(SIZE(2)),<br>OCTETSTRING(SIZE(2)),<br>CMNCounter } | |

#### 9.2.1.4.4 PORT LER Group Attributes

| ASN.1 Type Definition | | |
|---|---|---|
| **Type Name :** PORTLer_Group<br>**Comments :** | | |
| **Type Definition** | | |
| SET {lerestimate<br>lemrejectct<br>lemct<br>lercutoff<br>leralarm | PORTLer_Estimate,<br>PORTLem_Reject_Ct,<br>PORTLem_Ct,<br>PORTLer_Cutoff,<br>PORTLer_Alarm } | |



--`,,```,,,,````-`-`,,`,,`,`,,`---
Copyright International Organization for Standardization
Provided by IHS under license with ISO
No reproduction or networking permitted without license from IHS
Not for Resale

| ASN.1 Type Definition | | | |
|---|---|---|---|
| **Type Name :** PORTLer_Estimate<br>**Comments :** | | | |
| **Type Definition** | | | |
| SEQUENCE | {Parameter_Type | OCTETSTRING(SIZE(2)), | |
| | Parameter_Length | OCTETSTRING(SIZE(2)), | |
| | PAD | OCTETSTRING(SIZE(2)) | |
| | portindex | OCTETSTRING(SIZE(2)), | |
| | PAD | OCTETSTRING(SIZE(3)), | |
| | lerestimatetype | PORTLerExponentType | } |

| ASN.1 Type Definition | | | |
|---|---|---|---|
| **Type Name :** PORTLem_Reject_Ct<br>**Comments :** | | | |
| **Type Definition** | | | |
| SEQUENCE | {Parameter_Type | OCTETSTRING(SIZE(2)), | |
| | Parameter_Length | OCTETSTRING(SIZE(2)), | |
| | PAD | OCTETSTRING(SIZE(2)) | |
| | portindex | OCTETSTRING(SIZE(2)), | |
| | lemrejectcttype | CMNCounter | } |


Copyright International Organization for Standardization
Provided by IHS under license with ISO
No reproduction or networking permitted without license from IHS
Not for Resale

| ASN.1 Type Definition | | |
|---|---|---|
| **Type Name :** PORTLem_Ct<br>**Comments :** | | |
| **Type Definition** | | |
| SEQUENCE | {Parameter_Type | OCTETSTRING(SIZE(2)), |
| | Parameter_Length | OCTETSTRING(SIZE(2)), |
| | PAD | OCTETSTRING(SIZE(2)) |
| | portindex | OCTETSTRING(SIZE(2)), |
| | lemcttype | CMNCounter } |

| ASN.1 Type Definition | | |
|---|---|---|
| **Type Name :** PORTLer_Cutoff<br>**Comments :** | | |
| **Type Definition** | | |
| SEQUENCE | {Parameter_Type | OCTETSTRING(SIZE(2)), |
| | Parameter_Length | OCTETSTRING(SIZE(2)), |
| | PAD | OCTETSTRING(SIZE(2)) |
| | portindex | OCTETSTRING(SIZE(2)), |
| | PAD | OCTETSTRING(SIZE(2)), |
| | lercutofftype | PORTLerExponentType } |

| ASN.1 Type Definition | | |
|---|---|---|
| **Type Name :** PORTLer_Alarm<br>**Comments :** | | |
| **Type Definition** | | |
| SEQUENCE | {Parameter_Type | OCTETSTRING(SIZE(2)), |
| | Parameter_Length | OCTETSTRING(SIZE(2)), |
| | PAD | OCTETSTRING(SIZE(2)) |
| | portindex | OCTETSTRING(SIZE(2)), |
| | PAD | OCTETSTRING(SIZE(2)), |
| | leralarmtype | PORTLerExponentType } |



Copyright International Organization for Standardization
Provided by IHS under license with ISO
No reproduction or networking permitted without license from IHS
Not for Resale

### 9.2.1.4.5 PORT Status Group Attributes

| ASN.1 Type Definition | | | |
|---|---|---|---|
| **Type Name :** PORTStatus_Group<br>**Comments :** | | | |
| **Type Definition** | | | |
| SET | {connectionstate | PORTConnectState, | |
| | pcmstate | PORTPCMState, | |
| | pcwithhold | PORTPC_Withhold, | |
| | lerflag | PORTLerFlag, | |
| | hardwarepresent | PORTHardwarePresent | } |

| ASN.1 Type Definition | | | |
|---|---|---|---|
| **Type Name :** PORTConnectState<br>**Comments :** | | | |
| **Type Definition** | | | |
| SEQUENCE | {Parameter_Type | OCTETSTRING(SIZE(2)), | |
| | Parameter_Length | OCTETSTRING(SIZE(2)), | |
| | PAD | OCTETSTRING(SIZE(2)) | |
| | portindex | OCTETSTRING(SIZE(2)), | |
| | PAD | OCTETSTRING(SIZE(2)), | |
| | connectstatetype | PORTConnectStateType | } |

| ASN.1 Type Definition | | | |
|---|---|---|---|
| **Type Name :** PORTPCMState<br>**Comments :** | | | |
| **Type Definition** | | | |
| SEQUENCE | {Parameter_Type | OCTETSTRING(SIZE(2)), | |
| | Parameter_Length | OCTETSTRING(SIZE(2)), | |
| | PAD | OCTETSTRING(SIZE(2)) | |
| | portindex | OCTETSTRING(SIZE(2)), | |
| | PAD | OCTETSTRING(SIZE(2)), | |
| | pcmstatetype | PORTPCMStateType | } |


Copyright International Organization for Standardization
Provided by IHS under license with ISO
No reproduction or networking permitted without license from IHS
Not for Resale

| ASN.1 Type Definition | | |
|---|---|---|
| **Type Name :** PORTPC_Withhold<br>**Comments :** | | |
| **Type Definition** | | |
| SEQUENCE {Parameter_Type | OCTETSTRING(SIZE(2)), | |
| Parameter_Length | OCTETSTRING(SIZE(2)), | |
| PAD | OCTETSTRING(SIZE(2)) | |
| portindex | OCTETSTRING(SIZE(2)), | |
| PAD | OCTETSTRING(SIZE(2)), | |
| pcwithholdtype | PORTPC_WithholdType | } |

| ASN.1 Type Definition | | |
|---|---|---|
| **Type Name :** PORTLerFlag<br>**Comments :** | | |
| **Type Definition** | | |
| SEQUENCE {Parameter_Type | OCTETSTRING(SIZE(2)), | |
| Parameter_Length | OCTETSTRING(SIZE(2)), | |
| PAD | OCTETSTRING(SIZE(2)) | |
| portindex | OCTETSTRING(SIZE(2)), | |
| PAD | OCTETSTRING(SIZE(2)), | |
| lerflagtype | CMNFlag DEFAULT FALSE | } |

| ASN.1 Type Definition | | |
|---|---|---|
| **Type Name :** PORTHardwarePresent<br>**Comments :** | | |
| **Type Definition** | | |
| SEQUENCE {Parameter_Type | OCTETSTRING(SIZE(2)), | |
| Parameter_Length | OCTETSTRING(SIZE(2)), | |
| PAD | OCTETSTRING(SIZE(2)) | |
| portindex | OCTETSTRING(SIZE(2)), | |
| PAD | OCTETSTRING(SIZE(2)), | |
| presenttype | CMNPresent | } |



Copyright International Organization for Standardization
Provided by IHS under license with ISO
No reproduction or networking permitted without license from IHS
Not for Resale

| ASN.1 Type Definition | | |
|---|---|---|
| **Type Name :** PORTVendorAttrib<br>**Comments :** | | |
| **Type Definition** | | |
| SEQUENCE {Parameter_Type<br>Parameter_Length<br>PAD<br>portindex<br>PAD<br>vendormibtype | OCTETSTRING(SIZE(2)),<br>OCTETSTRING(SIZE(2)),<br>OCTETSTRING(SIZE(2))<br>OCTETSTRING(SIZE(2)),<br>OCTETSTRING(SIZE(1)),<br>CMNVendorMIBType | } |

### 9.2.1.5 ASN.1 Type Definitions for Actions and Notifications

#### 9.2.1.5.1 Actions

| ASN.1 Type Definition | | |
|---|---|---|
| **Type Name :** SMTStationAction<br>**Comments :** | | |
| **Type Definition** | | |
| SEQUENCE {Parameter_Type<br>Parameter_Length<br>PAD<br>actioninfo | OCTETSTRING(SIZE(2)),<br>OCTETSTRING(SIZE(2)),<br>OCTETSTRING(SIZE(2)),<br>SMTActionInfoType | } |

| ASN.1 Type Definition | | |
|---|---|---|
| **Type Name :** SMTVendorAction<br>**Comments :** | | |
| **Type Definition** | | |
| SEQUENCE {Parameter_Type<br>Parameter_Length<br>vendormibtype | OCTETSTRING(SIZE(2)),<br>OCTETSTRING(SIZE(2)),<br>CMNVendorMIBType | } |

| ASN.1 Type Definition | | |
|---|---|---|
| **Type Name :** MACVendorAction<br>**Comments :** | | |
| **Type Definition** | | |
| SEQUENCE {Parameter_Type<br>Parameter_Length<br>vendormibtype | OCTETSTRING(SIZE(2)),<br>OCTETSTRING(SIZE(2)),<br>CMNVendorMIBType | } |


Copyright International Organization for Standardization
Provided by IHS under license with ISO
No reproduction or networking permitted without license from IHS
Not for Resale

| ASN.1 Type Definition | | | |
|---|---|---|---|
| **Type Name :** PATHVendorAction<br>**Comments :** | | | |
| **Type Definition** | | | |
| SEQUENCE | {Parameter_Type<br>Parameter_Length<br>vendormibtype | OCTETSTRING(SIZE(2)),<br>OCTETSTRING(SIZE(2)),<br>CMNVendorMIBType | } |

| ASN.1 Type Definition | | | |
|---|---|---|---|
| **Type Name :** PORTAction<br>**Comments :** | | | |
| **Type Definition** | | | |
| SEQUENCE | {Parameter_Type<br>Parameter_Length<br>actiontype | OCTETSTRING(SIZE(2)),<br>OCTETSTRING(SIZE(2)),<br>PORTActionType | } |

| ASN.1 Type Definition | | | |
|---|---|---|---|
| **Type Name :** PORTVendorAction<br>**Comments :** | | | |
| **Type Definition** | | | |
| SEQUENCE | {Parameter_Type<br>Parameter_Length<br>vendormibtype | OCTETSTRING(SIZE(2)),<br>OCTETSTRING(SIZE(2)),<br>CMNVendorMIBType | } |

#### 9.2.1.5.2 Notifications

| ASN.1 Type Definition | | | |
|---|---|---|---|
| **Type Name :** SMTHoldCondition<br>**Comments :** | | | |
| **Type Definition** | | | |
| SEQUENCE | {Parameter_Type<br>Parameter_Length<br>PAD<br>holdconditiontype | OCTETSTRING(SIZE(2)),<br>OCTETSTRING(SIZE(2)),<br>OCTETSTRING(SIZE(2)),<br>SMTHoldConditionDataType | } |



Copyright International Organization for Standardization
Provided by IHS under license with ISO
No reproduction or networking permitted without license from IHS
Not for Resale

| ASN.1 Type Definition | | |
|---|---|---|
| **Type Name :** SMTPeerWrapCondition<br>**Comments :** | | |
| **Type Definition** | | |
| SEQUENCE | {Parameter_Type | OCTETSTRING(SIZE(2)), |
| | Parameter_Length | OCTETSTRING(SIZE(2)), |
| | PAD | OCTETSTRING(SIZE(2)), |
| | cf_state | SMTCF_StateType } |

| ASN.1 Type Definition | | |
|---|---|---|
| **Type Name :** SMTVendorNotification<br>**Comments :** | | |
| **Type Definition** | | |
| SEQUENCE | {Parameter_Type | OCTETSTRING(SIZE(2)), |
| | Parameter_Length | OCTETSTRING(SIZE(2)), |
| | PAD | OCTETSTRING(SIZE(1)) |
| | vendormibtype | CMNVendorMIBType } |

| ASN.1 Type Definition | | |
|---|---|---|
| **Type Name :** MACDuplicateAddressCondition<br>**Comments :** | | |
| **Type Definition** | | |
| SEQUENCE | {Parameter_Type | OCTETSTRING(SIZE(2)), |
| | Parameter_Length | OCTETSTRING(SIZE(2)), |
| | PAD | OCTETSTRING(SIZE(2)) |
| | macindex | OCTETSTRING(SIZE(2)), |
| | PAD | OCTETSTRING(SIZE(2)), |
| | duplicateaddressconditiontype | MACDuplicateAddressDataType} |

| ASN.1 Type Definition | | |
|---|---|---|
| **Type Name :** MACFrameErrorCondition<br>**Comments :** | | |
| **Type Definition** | | |
| SEQUENCE | {Parameter_Type | OCTETSTRING(SIZE(2)), |
| | Parameter_Length | OCTETSTRING(SIZE(2)), |
| | PAD | OCTETSTRING(SIZE(2)) |
| | macindex | OCTETSTRING(SIZE(2)), |
| | PAD | OCTETSTRING(SIZE(2)), |
| | frameerrorconditiontype | MACFrameErrorDataType } |


Copyright International Organization for Standardization
Provided by IHS under license with ISO
No reproduction or networking permitted without license from IHS
Not for Resale

| ASN.1 Type Definition | | | |
|---|---|---|---|
| **Type Name :** MACNotCopiedCondition<br>**Comments :** | | | |
| **Type Definition** | | | |
| SEQUENCE | {Parameter_Type | OCTETSTRING(SIZE(2)), | |
| | Parameter_Length | OCTETSTRING(SIZE(2)), | |
| | PAD | OCTETSTRING(SIZE(2)) | |
| | macindex | OCTETSTRING(SIZE(2)), | |
| | PAD | OCTETSTRING(SIZE(2)), | |
| | notcopiedconditiontype | MACNotCopiedDataType | } |

| ASN.1 Type Definition | | | |
|---|---|---|---|
| **Type Name :** MACNeighborChangeEvent<br>**Comments :** | | | |
| **Type Definition** | | | |
| SEQUENCE | {Parameter_Type | OCTETSTRING(SIZE(2)), | |
| | Parameter_Length | OCTETSTRING(SIZE(2)), | |
| | PAD | OCTETSTRING(SIZE(2)) | |
| | macindex | OCTETSTRING(SIZE(2)), | |
| | PAD | OCTETSTRING(SIZE(2)), | |
| | neigborchangeeventtype | MACNeighborChangeDataType | } |

| ASN.1 Type Definition | | | |
|---|---|---|---|
| **Type Name :** MACPathChangeEvent<br>**Comments :** | | | |
| **Type Definition** | | | |
| SEQUENCE | {Parameter_Type | OCTETSTRING(SIZE(2)), | |
| | Parameter_Length | OCTETSTRING(SIZE(2)), | |
| | PAD | OCTETSTRING(SIZE(2)) | |
| | macindex | OCTETSTRING(SIZE(2)), | |
| | PAD | OCTETSTRING(SIZE(2)), | |
| | pathchangeeventtype | MACPathChangeDataType | } |



Copyright International Organization for Standardization
Provided by IHS under license with ISO
No reproduction or networking permitted without license from IHS
Not for Resale

| ASN.1 Type Definition | | | |
|---|---|---|---|
| **Type Name :** MACVendorNotification<br>**Comments :** | | | |
| **Type Definition** | | | |
| SEQUENCE | {Parameter_Type | OCTETSTRING(SIZE(2)), | |
| | Parameter_Length | OCTETSTRING(SIZE(2)), | |
| | PAD | OCTETSTRING(SIZE(2)) | |
| | macindex | OCTETSTRING(SIZE(2)), | |
| | PAD | OCTETSTRING(SIZE(2)), | |
| | vendornotificationtype | SET OF CMNVendorMIBType | } |

| ASN.1 Type Definition | | | |
|---|---|---|---|
| **Type Name :** PATHVendorNotification<br>**Comments :** | | | |
| **Type Definition** | | | |
| SEQUENCE | {Parameter_Type | OCTETSTRING(SIZE(2)), | |
| | Parameter_Length | OCTETSTRING(SIZE(2)), | |
| | PAD | OCTETSTRING(SIZE(2)) | |
| | pathindex | OCTETSTRING(SIZE(2)), | |
| | PAD | OCTETSTRING(SIZE(2)), | |
| | vendornotificationtype | SET OF CMNVendorMIBType | } |

| ASN.1 Type Definition | | | |
|---|---|---|---|
| **Type Name :** PORTLerCondition<br>**Comments :** | | | |
| **Type Definition** | | | |
| SEQUENCE | {Parameter_Type | OCTETSTRING(SIZE(2)), | |
| | Parameter_Length | OCTETSTRING(SIZE(2)), | |
| | PAD | OCTETSTRING(SIZE(2)) | |
| | portindex | OCTETSTRING(SIZE(2)), | |
| | PAD | OCTETSTRING(SIZE(2)), | |
| | lerconditiontype | PORTLerDataType | } |

| ASN.1 Type Definition | | | |
|---|---|---|---|
| **Type Name :** PORTUndesiredConnectionAttemptEvent<br>**Comments :** | | | |
| **Type Definition** | | | |
| SEQUENCE | {Parameter_Type | OCTETSTRING(SIZE(2)), | |
| | Parameter_Length | OCTETSTRING(SIZE(2)), | |
| | PAD | OCTETSTRING(SIZE(2)), | |
| | portindex | OCTETSTRING(SIZE(2)), | |
| | PAD | OCTETSTRING(SIZE(2)), | |
| | undesiredconnectionattempteventtype | PORTUndesiredConnectionDataType | |
| } | | | |


Copyright International Organization for Standardization
Provided by IHS under license with ISO
No reproduction or networking permitted without license from IHS
Not for Resale

| ASN.1 Type Definition | | | |
|---|---|---|---|
| **Type Name :** PORTEBErrorCondition<br>**Comments :** | | | |
| **Type Definition** | | | |
| SEQUENCE | {Parameter_Type | OCTETSTRING(SIZE(2)), | |
| | Parameter_Length | OCTETSTRING(SIZE(2)), | |
| | PAD | OCTETSTRING(SIZE(2)) | |
| | portindex | OCTETSTRING(SIZE(2)), | |
| | PAD | OCTETSTRING(SIZE(2)), | |
| | eberrorconditiontype | PORTEBErrorDataType | } |

| ASN.1 Type Definition | | | |
|---|---|---|---|
| **Type Name :** PORTPathChangeEvent<br>**Comments :** | | | |
| **Type Definition** | | | |
| SEQUENCE | {Parameter_Type | OCTETSTRING(SIZE(2)), | |
| | Parameter_Length | OCTETSTRING(SIZE(2)), | |
| | PAD | OCTETSTRING(SIZE(2)) | |
| | portindex | OCTETSTRING(SIZE(2)), | |
| | PAD | OCTETSTRING(SIZE(2)), | |
| | pathchangeeventtype | PORTPathChangeDataType | } |

| ASN.1 Type Definition | | | |
|---|---|---|---|
| **Type Name :** PORTVendorNotification<br>**Comments :** | | | |
| **Type Definition** | | | |
| SEQUENCE | {Parameter_Type | OCTETSTRING(SIZE(2)), | |
| | Parameter_Length | OCTETSTRING(SIZE(2)), | |
| | PAD | OCTETSTRING(SIZE(2)) | |
| | portindex | OCTETSTRING(SIZE(2)), | |
| | PAD | OCTETSTRING(SIZE(2)), | |
| | vendornotificationtype | SET OF CMNVendorMIBType | } |



Copyright International Organization for Standardization
Provided by IHS under license with ISO
No reproduction or networking permitted without license from IHS
Not for Resale

### 9.2.1.6 ASN.1 Type Definitions for SMT Definitions

#### 9.2.1.6.1 Common Definitions

| ASN.1 Type Definition |
|---|
| **Type Name :** CMNAvailablePathsType<br>**Comments :** |
| **Type Definition** |
| [8] IMPLICIT BITSTRING<br>{primary (0),<br>secondary (1),<br>local (2) } (SIZE(8)) |

| ASN.1 Type Definition |
|---|
| **Type Name :** CMNCounter<br>**Comments :** |
| **Type Definition** |
| Counter ::= INTEGER(0..4294967295) -- 4 octets |

| ASN.1 Type Definition |
|---|
| **Type Name :** CMNCurrentPathType<br>**Comments :** |
| **Type Definition** |
| ENUMERATED {isolated (0),<br>local (1),<br>secondary (2),<br>primary (3),<br>concatenated (4),<br>thru (5) } |

| ASN.1 Type Definition |
|---|
| **Type Name :** CMNFlag<br>**Comments :** |
| **Type Definition** |
| IMPLICIT BITSTRING<br>{false (0),<br>true (1) } -- BOOLEAN |


Copyright International Organization for Standardization
Provided by IHS under license with ISO
No reproduction or networking permitted without license from IHS
Not for Resale

| ASN.1 Type Definition |
|---|
| **Type Name :** CMNLongAddressType<br>**Comments :** |
| **Type Definition** |
| longgaddress ::= OCTETSTRING(SIZE(6)) |

| ASN.1 Type Definition |
|---|
| **Type Name :** CMNPermittedPathsType<br>**Comments :** |
| **Type Definition** |
| [8] IMPLICIT BITSTRING<br>{local (0),<br>secondary_alternate (1),<br>primary_alternate (2),<br>concatenate_alternate (3),<br>secondary_prefered (4),<br>primary_prefered (5),<br>concatenated_prefered (6),<br>thru (7) } (SIZE(8)) |

| ASN.1 Type Definition |
|---|
| **Type Name :** CMNPortType<br>**Comments :** |
| **Type Definition** |
| ENUMERATED {a (0),<br>b (1),<br>s (2),<br>m (3),<br>none (4) } |

| ASN.1 Type Definition |
|---|
| **Type Name :** CMNPresent<br>**Comments :** |
| **Type Definition** |
| ENUMERATED {notpresent (0),<br>present (1) } |



Copyright International Organization for Standardization
Provided by IHS under license with ISO
No reproduction or networking permitted without license from IHS
Not for Resale

| ASN.1 Type Definition |
|---|
| **Type Name :** CMNResourceIdType<br>**Comments :** |
| **Type Definition** |
| resourceid ::= INTEGER(0..65535) -- 2octets |

| ASN.1 Type Definition |
|---|
| **Type Name :** CMNResourceTagType<br>**Comments :** |
| **Type Definition** |
| SEQUENCE {resource_type CMNResourceType,<br>resource_index CMNResourceIdType,<br>current_port CMNCurrentPathType } |

| ASN.1 Type Definition |
|---|
| **Type Name :** CMNResourceType<br>**Comments :** |
| **Type Definition** |
| ENUMERATED {mac (2),<br>port (4) } |

| ASN.1 Type Definition |
|---|
| **Type Name :** :CMNTime<br>**Comments :** |
| **Type Definition** |
| time ::= INTEGER(0..4294967295) -- 4 octets |

| ASN.1 Type Definition |
|---|
| **Type Name :** CMNTwosComplementType<br>**Comments :** |
| **Type Definition** |
| timertwoscomplement ::= OCTETSTRING(SIZE(4)) |


Copyright International Organization for Standardization
Provided by IHS under license with ISO
No reproduction or networking permitted without license from IHS Not for Resale

| ASN.1 Type Definition |
|---|
| **Type Name :** CMNTimeStampType<br>**Comments :** |
| **Type Definition** |
| timestamp ::= INTEGER(0..82446744073709551615) -- 8 octets |

| ASN.1 Type Definition | | |
|---|---|---|
| **Type Name :** CMNVendorMIBType<br>**Comments :** | | |
| **Type Definition** | | |
| SEQUENCE | {manufactureroui | OCTETSTRING(SIZE(3)), |
| | vendoroctet | OCTETSTRING(SIZE(1)), |
| | specificdata | OCTETSTRING(SIZE(ANY)) } |

#### 9.2.1.6.2 SMT Definitions

| ASN.1 Type Definition | | |
|---|---|---|
| **Type Name :** SMTActionInfoType<br>**Comments :** | | |
| **Type Definition** | | |
| ENUMERATED | {connect | (0), |
| | disconnect | (1), |
| | path_test | (2), |
| | self_test | (3), |
| | disable_a | (4), |
| | disable_b | (5), |
| | disable_m | (6), |
| | ec7 | (7) } |

| ASN.1 Type Definition |
|---|
| **Type Name :** SMTAvailablePathsType<br>**Comments :** |
| **Type Definition** |
| availablepaths ::= CMNAvailablePathsTypes |



--`,,```,,,,````-`-`,,`,,`,`,,`---
Copyright International Organization for Standardization
Provided by IHS under license with ISO
No reproduction or networking permitted without license from IHS
Not for Resale

| ASN.1 Type Definition |
|---|
| **Type Name :** SMTBypassPresentType<br>**Comments :** |
| **Type Definition** |
| bypasspresent ::= CMNFlag |

| ASN.1 Type Definition |
|---|
| **Type Name :** SMTCapabilitiesType<br>**Comments :** |
| **Type Definition** |
| [16] IMPLICIT BITSTRING<br>{holdavailable (0),<br>cf_wrap_ab (1) } (SIZE(16)) |

| ASN.1 Type Definition |
|---|
| **Type Name :** SMTCF_StateType<br>**Comments :** |
| **Type Definition** |
| ENUMERATED {isolated (0),<br>local_a (1),<br>local_b (2),<br>local_ab (3),<br>local_s (4),<br>wrap_a (5),<br>wrap_b (6),<br>wrap_ab (7),<br>wrap_s (8),<br>c_wrap_a (9),<br>c_wrap_b (10),<br>c_wrap_s (11),<br>thru (12) } |

| ASN.1 Type Definition |
|---|
| **Type Name :** SMTConfigCapabilitiesType<br>**Comments :** |
| **Type Definition** |
| capabilities ::= SMTCapabilitiesType |


Copyright International Organization for Standardization
Provided by IHS under license with ISO
No reproduction or networking permitted without license from IHS
Not for Resale

| ASN.1 Type Definition |
|---|
| **Type Name :** SMTConfigPolicyType<br>**Comments :** |
| **Type Definition** |
| [16] IMPLICIT BITSTRING<br>{configurationhold (0) } (SIZE(16)) |

| ASN.1 Type Definition |
|---|
| **Type Name :** SMTConnectionPolicyType<br>**Comments :** |
| **Type Definition** |
| [16] IMPLECIT BITSTRING<br>{rejectA_A (0),<br>rejectA_B (1),<br>rejectA_S (2),<br>rejectA_M (3),<br>rejectB_A (4),<br>rejectB_B (5),<br>rejectB_S (6),<br>rejectB_M (7),<br>rejectS_A (8),<br>rejectS_B (9),<br>rejectS_S (10),<br>rejectS_M (11),<br>rejectM_A (12),<br>rejectM_B (13),<br>rejectM_S (14),<br>rejectM_M (15) } (SIZE(16)) |

| ASN.1 Type Definition |
|---|
| **Type Name :** SMTECMStateType<br>**Comments :** |
| **Type Definition** |
| ENUMERATED {ec0 (0),<br>ec1 (1),<br>ec2 (2),<br>ec3 (3),<br>ec4 (4),<br>ec5 (5),<br>ec6 (6),<br>ec7 (7) } |



Copyright International Organization for Standardization
Provided by IHS under license with ISO
No reproduction or networking permitted without license from IHS
Not for Resale

| ASN.1 Type Definition |
|---|
| **Type Name :** SMTHiVersionIdType<br>**Comments :** |
| **Type Definition** |
| hiversionid ::= SMTVersionType |

| ASN.1 Type Definition |
|---|
| **Type Name :** SMTHoldConditionDataType<br>**Comments :** |
| **Type Definition** |
| SEQUENCE {conditionstate CMNFlag DEFAULT FALSE,<br>holdcondition SMTHoldStateType } |

| ASN.1 Type Definition | | | | |
|---|---|---|---|---|
| **Type Name :** SMTHoldStateType<br>**Comments :** | | | | |
| **Type Definition** | | | | |
| ENUMERATED | {not_holding | (0), | | |
| | holding_prm | (1), | | -- holding on primary |
| | holding_sec | (2) | } | -- holding on secondary |

| ASN.1 Type Definition |
|---|
| **Type Name :** SMTLoVersionIdType<br>**Comments :** |
| **Type Definition** |
| loversionid ::= SMTVersionType |

| ASN.1 Type Definition | |
|---|---|
| **Type Name :** SMTMac_CtType<br>**Comments :** | |
| **Type Definition** | |
| macct ::= INTEGER(0..255) | -- 1 octet |


Copyright International Organization for Standardization
Provided by IHS under license with ISO
No reproduction or networking permitted without license from IHS
Not for Resale

| ASN.1 Type Definition |
|---|
| **Type Name :** SMTManufacturerDataType<br>**Comments :** |
| **Type Definition** |
| SEQUENCE {manufactureroui OCTETSTRING(SIZE(3)),<br>manufacturerdata OCTETSTRING(SIZE(29)) } |

| ASN.1 Type Definition |
|---|
| **Type Name :** SMTMaster_CtType<br>**Comments :** |
| **Type Definition** |
| master_ct ::= INTEGER(0..255) |

| ASN.1 Type Definition |
|---|
| **Type Name :** SMTMIBVersionIdType<br>**Comments :** |
| **Type Definition** |
| mibversionid ::= SMTVersionType |

| ASN.1 Type Definition |
|---|
| **Type Name :** SMTNonMaster_CtType<br>**Comments :** |
| **Type Definition** |
| nonmaster_ct ::= INTEGER(0..255) |

| ASN.1 Type Definition |
|---|
| **Type Name :** SMTOpVersionIdType<br>**Comments :** |
| **Type Definition** |
| opversionid ::= SMTVersionType |



Copyright International Organization for Standardization
Provided by IHS under license with ISO
No reproduction or networking permitted without license from IHS
Not for Resale

| ASN.1 Type Definition |
|---|
| **Type Name :** SMTPeerWrapConditionDataType<br>**Comments :** |
| **Type Definition** |
| SEQUENCE {conditionstate CMNFlag DEFAULT FALSE,<br>peerwrapcondition SMTCF_StateType } |

| ASN.1 Type Definition |
|---|
| **Type Name :** SMTPeerWrapConditionType<br>**Comments :** |
| **Type Definition** |
| cfstate ::= SMTCF_StateType |

| ASN.1 Type Definition |
|---|
| **Type Name :** SMTPeerWrapFlagType<br>**Comments :** |
| **Type Definition** |
| peerwrapflag ::= CMNFlag |

| ASN.1 Type Definition |
|---|
| **Type Name :** SMTRemoteDisconnectFlagType<br>**Comments :** |
| **Type Definition** |
| remotedisconnectflag ::= CMNFlag |

| ASN.1 Type Definition |
|---|
| **Type Name :** SMTSetCountType<br>**Comments :** |
| **Type Definition** |
| SEQUENCE {count CMNCounter,<br>settimestamp CMNTimeStampType } |



Copyright International Organization for Standardization
Provided by IHS under license with ISO
No reproduction or networking permitted without license from IHS
Not for Resale

| ASN.1 Type Definition |
|---|
| **Type Name :** SMTStationIdentifierType<br>**Comments :** |
| **Type Definition** |
| SEQUENCE {implememteroctet OCTETSTRING(SIZE(2)),<br>longaddress CMNLongAddressType } |

| ASN.1 Type Definition |
|---|
| **Type Name :** SMTStatusType<br>**Comments :** |
| **Type Definition** |
| ENUMERATED {concatenated (0),<br>separated (1),<br>thru (2) } |

| ASN.1 Type Definition |
|---|
| **Type Name :** SMTStatRptPolicyType<br>**Comments :** |
| **Type Definition** |
| flag ::= CMNFlag |

| ASN.1 Type Definition |
|---|
| **Type Name :** SMTT_NotifyType<br>**Comments :** |
| **Type Definition** |
| t_notify ::= OCTETSTRING(SIZE(2)) |

| ASN.1 Type Definition |
|---|
| **Type Name :** SMTTimeStampType<br>**Comments :** |
| **Type Definition** |
| timestamp ::= CMNTimeStamp |



Copyright International Organization for Standardization
Provided by IHS under license with ISO
No reproduction or networking permitted without license from IHS
Not for Resale

| ASN.1 Type Definition |
|---|
| **Type Name :** SMTTrace_MaxExpirationType<br>**Comments :** |
| **Type Definition** |
| tracemaxexpiration ::= CMNTime |

| ASN.1 Type Definition |
|---|
| **Type Name :** SMTTransitionTimeStampType<br>**Comments :** |
| **Type Definition** |
| transitiontimestamp ::= CMNTimeStamp |

| ASN.1 Type Definition |
|---|
| **Type Name :** SMTUserDataType<br>**Comments :** |
| **Type Definition** |
| userdata ::= OCTETSTRING(SIZE(32)) |

| ASN.1 Type Definition |
|---|
| **Type Name :** SMTVersionType<br>**Comments :** |
| **Type Definition** |
| versiontype ::= INTEGER(0..65535) -- 2 octets |

#### 9.2.1.6.3 MAC Definitions

| ASN.1 Type Definition |
|---|
| **Type Name :** MACAvailablePathsType<br>**Comments :** |
| **Type Definition** |
| availablepaths::= CMNAvaiablePaths |


Copyright International Organization for Standardization
Provided by IHS under license with ISO
No reproduction or networking permitted without license from IHS Not for Resale

| ASN.1 Type Definition |
|---|
| **Type Name :** MACBridgeType<br>**Comments :** |
| **Type Definition** |
| IMPLICIT BITSTRING<br>{tb (0),<br>sr (1),<br>srt (2) } (SIZE(16)) |

| ASN.1 Type Definition |
|---|
| **Type Name :** MACCopied_CtType<br>**Comments :** |
| **Type Definition** |
| copiedct ::= CMNCounter |

| ASN.1 Type Definition |
|---|
| **Type Name :** MACCurrentPathType<br>**Comments :** |
| **Type Definition** |
| currentpath ::= CMNCurrentPaths |

| ASN.1 Type Definition |
|---|
| **Type Name :** MACDA_FlagType<br>**Comments :** |
| **Type Definition** |
| daflag ::= CMNFlag |

| ASN.1 Type Definition |
|---|
| **Type Name :** MACDownstreanNbrType<br>**Comments :** |
| **Type Definition** |
| longaddress ::= CMNLongAddressType |

--`,,```,,,,````-`-`,,`,,`,`,,`---



Copyright International Organization for Standardization
Provided by IHS under license with ISO
No reproduction or networking permitted without license from IHS
Not for Resale

| ASN.1 Type Definition |
|---|
| **Type Name :** MACDownstreamPORTType<br>**Comments :** |
| **Type Definition** |
| porttype ::= CMNPortType |

| ASN.1 Type Definition |
|---|
| **Type Name :** MACDupAddressTestType<br>**Comments :** |
| **Type Definition** |
| ENUMERATED {none (0),<br>pass (1),<br>fail (2) } |

| ASN.1 Type Definition |
|---|
| **Type Name :** MACDupConditionType<br>**Comments :** |
| **Type Definition** |
| IMPLICIT BITSTRING<br>{mydup (0),<br>unadup (1) } (SIZE(16)) |

| ASN.1 Type Definition |
|---|
| **Type Name :** MACDuplicatedAddressDataType<br>**Comments :** |
| **Type Definition** |
| SEQUENCE {conditionstate CMNFlag DEFAULT FALSE,<br>duplicatedaddresstype MACDuplicatedAddressType } |

| ASN.1 Type Definition |
|---|
| **Type Name :** MACDuplicatedAddressType<br>**Comments :** |
| **Type Definition** |
| SEQUENCE {dupcondition MACDupConditionType,<br>fddilong CMNLongAddressType,<br>fddiunalong CMNLongAddressType } |


Copyright International Organization for Standardization
Provided by IHS under license with ISO
No reproduction or networking permitted without license from IHS
Not for Resale

| ASN.1 Type Definition |
|---|
| **Type Name :** MACError_CtType<br>**Comments :** |
| **Type Definition** |
| errorct ::= CMNCounter |

| ASN.1 Type Definition |
|---|
| **Type Name :** MACFrame_CtType<br>**Comments :** |
| **Type Definition** |
| framect ::= CMNCounter |

| ASN.1 Type Definition | | |
|---|---|---|
| **Type Name :** MACFrameErrorDataType<br>**Comments :** | | |
| **Type Definition** | | |
| SEQUENCE {conditionstate | CMNFlag DEFAULT FALSE, | |
| framect | CMNCounter, | |
| errorct | CMNCounter, | |
| lostct | CMNCounter, | |
| frameerrorratio | MACFrameErrorRatioType | } |

| ASN.1 Type Definition |
|---|
| **Type Name :** MACFrameErrorRatioType<br>**Comments :** |
| **Type Definition** |
| frameerrorratio::= INTEGER(0..65536) -- 2 octets |

| ASN.1 Type Definition |
|---|
| **Type Name :** MACFrameErrorThresholdType<br>**Comments :** |
| **Type Definition** |
| frameerrorthreshold ::= INTEGER(0..65535) -- 2 octets |



Copyright International Organization for Standardization
Provided by IHS under license with ISO
No reproduction or networking permitted without license from IHS
Not for Resale

| ASN.1 Type Definition |
|---|
| **Type Name :** MACFS_Functions<br>**Comments :** |
| **Type Definition** |
| IMPLICIT BITSTRING<br>{fs_repeating (0),<br>fs_setting (1),<br>fs_clearing (2) } (SIZE(16)) |

| ASN.1 Type Definition |
|---|
| **Type Name :** MACHWPresentType<br>**Comments :** |
| **Type Definition** |
| present ::= CMNPresent |

| ASN.1 Type Definition |
|---|
| **Type Name :** MACLate_CtType<br>**Comments :** |
| **Type Definition** |
| latect ::= CMNCounter |

| ASN.1 Type Definition |
|---|
| **Type Name :** MACLost_CtType<br>**Comments :** |
| **Type Definition** |
| lostct ::= CMNCounter |

| ASN.1 Type Definition |
|---|
| **Type Name :** MACMAUnitdataAvailableType<br>**Comments :** |
| **Type Definition** |
| maunitdataavailable ::= CMNFlag |


Copyright International Organization for Standardization
Provided by IHS under license with ISO
No reproduction or networking permitted without license from IHS
Not for Resale

| ASN.1 Type Definition |
|---|
| **Type Name :** MACMAUnitdataEnableType<br>**Comments :** |
| **Type Definition** |
| naunitdataenable ::= CMNFlag |

| ASN.1 Type Definition |
|---|
| **Type Name :** MACNAConditionType<br>**Comments :** |
| **Type Definition** |
| IMPLICIT BITSTRING<br>{unachang (0),<br>dnachange (1) } (SIZE(8)) |

| ASN.1 Type Definition |
|---|
| **Type Name :** MACNeighborChangeDataType<br>**Comments :** |
| **Type Definition** |
| SEQUENCE {multipleoccurrence CMNFlag DEFAULT FALSE,<br>neighborchangetype MACNeighborChangeType } |

| ASN.1 Type Definition |
|---|
| **Type Name :** MACNeighborChangeType<br>**Comments :** |
| **Type Definition** |
| SEQUENCE {nacondition MACNAConditionType,<br>old_una CMNLongAddressType,<br>new_una CMNLongAddressType,<br>old_dna CMNLongAddressType,<br>new_dna CMNLongAddressType,<br>currentpath CMNLongAddressType,<br>smtaddress CMNLongAddressType } |



Copyright International Organization for Standardization
Provided by IHS under license with ISO
No reproduction or networking permitted without license from IHS
Not for Resale

| ASN.1 Type Definition |
|---|
| **Type Name :** MACNotCopied_CtType<br>**Comments :** |
| **Type Definition** |
| notcopiedct ::= CMNCounter |

| ASN.1 Type Definition |
|---|
| **Type Name :** MACNotCopiedFlagType<br>**Comments :** |
| **Type Definition** |
| notcopiedflag ::= CMNFlag |

| ASN.1 Type Definition |
|---|
| **Type Name :** MACNotCopiedDataType<br>**Comments :** |
| **Type Definition** |
| SEQUENCE {conditionstate CMNFlag DEFAULT FALSE,<br>notcopiedct CMNCounter,<br>copiedct CMNCounter,<br>notcopiedratio MACNotCopiedRatioType } |

| ASN.1 Type Definition |
|---|
| **Type Name :** MACNotCopiedRatioType<br>**Comments :** |
| **Type Definition** |
| notcopiedratio ::= INTEGER(0..65536) -- 2 octets |

| ASN.1 Type Definition |
|---|
| **Type Name :** MACNotCopiedThresholdType<br>**Comments :** |
| **Type Definition** |
| notcopiedthreshold ::= INTEGER(0..65536) -- 2 octets |

| ASN.1 Type Definition |
|---|
| **Type Name :** MACOldDownStreamNbrType<br>**Comments :** |
| **Type Definition** |
| lonagddress ::= CMNLongaddressType |


Copyright International Organization for Standardization
Provided by IHS under license with ISO
No reproduction or networking permitted without license from IHS Not for Resale

| ASN.1 Type Definition |
|---|
| **Type Name :** MACOldUpStreamNbrType<br>**Comments :** |
| **Type Definition** |
| lonagddress ::= CMNLongaddressType |

| ASN.1 Type Definition |
|---|
| **Type Name :** MACPathChangeDataType<br>**Comments :** |
| **Type Definition** |
| SEQUENCE {multipleoccurence CMNFlag,<br>pathchangetype MACPathChangeType } |

| ASN.1 Type Definition |
|---|
| **Type Name :** MACPathChangeType<br>**Comments :** |
| **Type Definition** |
| SEQUENCE {availablepath CMNAvailablePathsType,<br>currentpath CMNCurrentPathType,<br>requestedpath MACRequestedPathsType } |

| ASN.1 Type Definition |
|---|
| **Type Name :** MACRequestedPathsType<br>**Comments :** |
| **Type Definition** |
| requestedpaths::= CMNPermittedPathsType |

| ASN.1 Type Definition |
|---|
| **Type Name :** MACRingOp_CtType<br>**Comments :** |
| **Type Definition** |
| ringopct ::= CMNCounter |



Copyright International Organization for Standardization
Provided by IHS under license with ISO
No reproduction or networking permitted without license from IHS
Not for Resale

| ASN.1 Type Definition | | | | |
|---|---|---|---|---|
| **Type Name :** MACRMTStateType<br>**Comments :** | | | | |
| **Type Definition** | | | | |
| ENUMERATED | {rm0 | (0), | | -- Isolated |
| | rm1 | (1), | | -- Non_Op |
| | rm2 | (2), | | -- Ring_Op |
| | rm3 | (3), | | -- Detect |
| | rm4 | (4), | | -- Non_Op_Dup |
| | rm5 | (5), | | -- Ring_Op_Dup |
| | rm6 | (6), | | -- Directed |
| | rm7 | (2) | } | -- Trace |

| ASN.1 Type Definition |
|---|
| **Type Name :** MACShortAddressType<br>**Comments :** |
| **Type Definition** |
| shortaddress ::= OCTETSTRING(SIZE(2)) |

| ASN.1 Type Definition |
|---|
| **Type Name :** MACSMTAddressType<br>**Comments :** |
| **Type Definition** |
| smtaddress ::= CMNLongAddressType |

| ASN.1 Type Definition |
|---|
| **Type Name :** MACT_MaxCapabilityType<br>**Comments :** |
| **Type Definition** |
| tmaxcapability ::= CMNTwosComplementType |

| ASN.1 Type Definition |
|---|
| **Type Name :** MACT_Pri0Type<br>**Comments :** |
| **Type Definition** |
| tpri0 ::= CMNTwosComplementType |


Copyright International Organization for Standardization
Provided by IHS under license with ISO
No reproduction or networking permitted without license from IHS
Not for Resale

| ASN.1 Type Definition |
|---|
| **Type Name :** MACT_Pri1Type<br>**Comments :** |
| **Type Definition** |
| tpri1 ::= CMNTwosComplementType |

| ASN.1 Type Definition |
|---|
| **Type Name :** MACT_Pri2Type<br>**Comments :** |
| **Type Definition** |
| tpri2 ::= CMNTwosComplementType |

| ASN.1 Type Definition |
|---|
| **Type Name :** MACT_Pri3Type<br>**Comments :** |
| **Type Definition** |
| tpri3 ::= CMNTwosComplementType |

| ASN.1 Type Definition |
|---|
| **Type Name :** MACT_Pri4Type<br>**Comments :** |
| **Type Definition** |
| tpri4 ::= CMNTwosComplementType |

| ASN.1 Type Definition |
|---|
| **Type Name :** MACT_Pri5Type<br>**Comments :** |
| **Type Definition** |
| tpri5 ::= CMNTwosComplementType |

| ASN.1 Type Definition |
|---|
| **Type Name :** MACT_Pri6Type<br>**Comments :** |
| **Type Definition** |
| tpri6 ::= CMNTwosComplementType |



Copyright International Organization for Standardization
Provided by IHS under license with ISO
No reproduction or networking permitted without license from IHS
Not for Resale

| ASN.1 Type Definition |
|---|
| **Type Name :** MACTMaxType<br>**Comments :** |
| **Type Definition** |
| tmax ::= CMNTwosComplementType |

| ASN.1 Type Definition |
|---|
| **Type Name :** MACTNegType<br>**Comments :** |
| **Type Definition** |
| tneg ::= CMNTwosComplementType |

| ASN.1 Type Definition |
|---|
| **Type Name :** MACToken_CtType<br>**Comments :** |
| **Type Definition** |
| tokenct ::= CMNCounter |

| ASN.1 Type Definition |
|---|
| **Type Name :** MACTransmit_CtType<br>**Comments :** |
| **Type Definition** |
| transmitct ::= CMNCounter |

| ASN.1 Type Definition |
|---|
| **Type Name :** MACTReqType<br>**Comments :** |
| **Type Definition** |
| treq ::= CMNTwosComplementType |

| ASN.1 Type Definition |
|---|
| **Type Name :** MACTVXCapabilityType<br>**Comments :** |
| **Type Definition** |
| tvxcapability ::= CMNTwosComplementType |


Copyright International Organization for Standardization
Provided by IHS under license with ISO
No reproduction or networking permitted without license from IHS
Not for Resale

| ASN.1 Type Definition |
|---|
| **Type Name :** MACTvxExpired_CtType<br>**Comments :** |
| **Type Definition** |
| tvxexpiredct ::= CMNCounter_Q |

| ASN.1 Type Definition |
|---|
| **Type Name :** MACTVXValueType<br>**Comments :** |
| **Type Definition** |
| tvxvalue ::= CMNTwosComplementType |

| ASN.1 Type Definition |
|---|
| **Type Name :** MACUNDA_FlagType<br>**Comments :** |
| **Type Definition** |
| undaflag ::= CMNFlag |

| ASN.1 Type Definition |
|---|
| **Type Name :** MACUpstreamNbrType<br>**Comments :** |
| **Type Definition** |
| upstreamnbr ::= CMNLongAddressType |

#### 9.2.1.6.4 PATH Definitions

| ASN.1 Type Definition |
|---|
| **Type Name :** PATHIndexType<br>**Comments :** |
| **Type Definition** |
| INTEGER(0..65535) {primary (1),<br>secondary (2) } --2 octets |



Copyright International Organization for Standardization
Provided by IHS under license with ISO
No reproduction or networking permitted without license from IHS
Not for Resale

| ASN.1 Type Definition |
|---|
| **Type Name :** PATHMaxT_ReqType<br>**Comments :** |
| **Type Definition** |
| maxtreq ::= CMNTwosComplementType |

| ASN.1 Type Definition |
|---|
| **Type Name :** PATHRingLatencyType<br>**Comments :** |
| **Type Definition** |
| ringlatency ::= CMNTime |

| ASN.1 Type Definition |
|---|
| **Type Name :** PATHSbaAvailableType<br>**Comments :** |
| **Type Definition** |
| sbaavailable ::= INTEGER(0..4294967295) -- 4 octets |

| ASN.1 Type Definition |
|---|
| **Type Name :** PATHSbaPayloadType<br>**Comments :** |
| **Type Definition** |
| sbapayload::= INTEGER(0..4294967295) -- 4 octets |

| ASN.1 Type Definition |
|---|
| **Type Name :** PATHSbaOverHeadType<br>**Comments :** |
| **Type Definition** |
| sbaoverhead ::= INTEGER(0..4294967295) -- 4 octets |


Copyright International Organization for Standardization
Provided by IHS under license with ISO
No reproduction or networking permitted without license from IHS Not for Resale

| ASN.1 Type Definition |
|---|
| **Type Name :** PATHT_MaxLowerBoundType<br>**Comments :** |
| **Type Definition** |
| tmaxlowerboundCMNTwosComplementType |

| ASN.1 Type Definition |
|---|
| **Type Name :** PATHT_RmodeType<br>**Comments :** |
| **Type Definition** |
| trmode ::= CMNTime |

| ASN.1 Type Definition |
|---|
| **Type Name :** PATHTraceStatusType<br>**Comments :** |
| **Type Definition** |
| IMPLICIT BITSTRING<br>{traceinitiated (0),<br>tracepropagated (1),<br>traceterminated (2),<br>tracetimeout (3) } |

| ASN.1 Type Definition |
|---|
| **Type Name :** PATHTVXLowerBoundType<br>**Comments :** |
| **Type Definition** |
| tvxlowerbound ::= CMNTwosComplementType |

### 9.2.1.6.5 PORT Definitions

| ASN.1 Type Definition |
|---|
| **Type Name :** PORTActionType<br>**Comments :** |
| **Type Definition** |
| ENUMERATED {mainport (0), -- signal PC_Maint<br>enableport (1), -- signal PC_Enable<br>disableport (2), -- signal PC_Disable<br>startport (3), -- signal PC_Start<br>stopport (4) } -- signal PC_Stop |



Copyright International Organization for Standardization
Provided by IHS under license with ISO
No reproduction or networking permitted without license from IHS
Not for Resale

| ASN.1 Type Definition |
|---|
| **Type Name :** PORTConnectionPoliciesType<br>**Comments :** |
| **Type Definition** |
| IMPLICIT BITSTRING<br>{pc_mac_lct (0),<br>pc_mac_loop (1) } (SIZE(8)) |

| ASN.1 Type Definition |
|---|
| **Type Name :** PORTConnectStateType<br>**Comments :** |
| **Type Definition** |
| ENUMERATED {disabled (0),<br>connected (1),<br>standby (2),<br>active (3) } |

| ASN.1 Type Definition |
|---|
| **Type Name :** PORTEBError_CtType<br>**Comments :** |
| **Type Definition** |
| eberrorct ::= CMNCounter |

| ASN.1 Type Definition |
|---|
| **Type Name :** PORTEBErrorDataType<br>**Comments :** |
| **Type Definition** |
| SEQUENCE {conditionstate CMNFlag DEFAULT FALSE,<br>eberrorcount CMNCounter } |

| ASN.1 Type Definition |
|---|
| **Type Name :** PORTHWPresentType<br>**Comments :** |
| **Type Definition** |
| present ::= CMNFlag |


Copyright International Organization for Standardization
Provided by IHS under license with ISO
No reproduction or networking permitted without license from IHS Not for Resale

| ASN.1 Type Definition |
|---|
| **Type Name :** PORTLCTFail_CtType<br>**Comments :** |
| **Type Definition** |
| lctfailct ::= CMNCounter |

| ASN.1 Type Definition |
|---|
| **Type Name :** PORTLem_CtType<br>**Comments :** |
| **Type Definition** |
| lemct ::= CMNCounter |

| ASN.1 Type Definition |
|---|
| **Type Name :** PORTLem_Reject_CtType<br>**Comments :** |
| **Type Definition** |
| lemrejectct ::= CMNCounter |

| ASN.1 Type Definition |
|---|
| **Type Name :** PORTLerDataType<br>**Comments :** |
| **Type Definition** |
| SEQUENCE {conditionstate CMNFlag DEFAULT FALSE,<br>lertype PORTLerType } |

| ASN.1 Type Definition |
|---|
| **Type Name :** PORTLerExponentType<br>**Comments :** |
| **Type Definition** |
| lerexponent ::= INTEGER(0..255) -- 1 octet |

--`,,```,,,,````-`-`,,`,,`,`,,`---



Copyright International Organization for Standardization
Provided by IHS under license with ISO
No reproduction or networking permitted without license from IHS
Not for Resale

| ASN.1 Type Definition | | | |
|---|---|---|---|
| **Type Name :** :PORTLerType<br>**Comments :** | | | |
| **Type Definition** | | | |
| SEQUENCE | {lercutoff | PORTLerExponentType, | |
| | leralarm | PORTLerExponentType, | |
| | lerestimate | PORTLerExponentType, | |
| | lerrejectct | CMNCounter, | |
| | lerct | CMNCounter } | |

| ASN.1 Type Definition | | | |
|---|---|---|---|
| **Type Name :** PORTLineStateType<br>**Comments :** | | | |
| **Type Definition** | | | |
| ENUMERATED | {qls | (0), | -- quiet |
| | ils | (1), | -- idle |
| | mls | (2), | -- master |
| | hls | (3), | -- halt |
| | pdr | (4), | -- receive = active, transmit = PDR |
| | isu | (5), | -- receive = unknown |
| | nls | (6)} | -- receive = noise |

| ASN.1 Type Definition | | |
|---|---|---|
| **Type Name :** PORTMACIndicatedType<br>**Comments :** | | |
| **Type Definition** | | |
| SEQUENCE | {tval9 | CMNFlag DEFAULT TRUE, |
| | rval9 | CMNFlag DEFAULT TRUE } |

| ASN.1 Type Definition | | |
|---|---|---|
| **Type Name :** PORTPathChangeDataType<br>**Comments :** | | |
| **Type Definition** | | |
| SEQUENCE | {multipleoccurrence | CMNFlag DEFAULT FALSE, |
| | pathchangetype | PORTPathChangeType } |


Copyright International Organization for Standardization
Provided by IHS under license with ISO
No reproduction or networking permitted without license from IHS
Not for Resale

| ASN.1 Type Definition |
|---|
| **Type Name :** PORTPathChangeType<br>**Comments :** |
| **Type Definition** |

```
SEQUENCE    {availablepaths         CMNAvailablePathsType,
             currentpath            CMNCurrentPathType,
             requestedpaths         PORTRequestedPathsType,
             mytype                 CMNPortType,
             neighbortype           CMNPortType          }
```

| ASN.1 Type Definition |
|---|
| **Type Name :** PORTPCMStateType<br>**Comments :** |
| **Type Definition** |

```
ENUMERATED      {pc0    (0),        -- Off
                 pc1    (1),        -- Break
                 pc2    (2),        -- Trace
                 pc3    (3),        -- Connect
                 pc4    (4),        -- Next
                 pc5    (5),        -- Signal
                 pc6    (6),        -- Join
                 pc7    (7),        -- Verify
                 pc8    (8),        -- Active
                 pc9    (9)     }   -- Maint
```

| ASN.1 Type Definition |
|---|
| **Type Name :** PORTPC_WithholdType<br>**Comments :** |
| **Type Definition** |

```
ENUMERATED      {none               (0),
                 mm                 (1),
                 otherincompativle  (2),
                .pathnotavailable   (3)     }
```



Copyright International Organization for Standardization
Provided by IHS under license with ISO
No reproduction or networking permitted without license from IHS
Not for Resale

| ASN.1 Type Definition | | | |
|---|---|---|---|
| **Type Name :** PORTPMDClassType<br>**Comments :** | | | |
| **Type Definition** | | | |
| EMUNERATED | {multimode | (0), | |
| | single_mode1 | (1), | |
| | single_mode2 | (2), | |
| | sonet | (3), | |
| | low_cost_fiber | (4), | |
| | twisted_pair | (5), | |
| | unknown | (6), | |
| | unspecified | (7) | } |

| ASN.1 Type Definition | | | |
|---|---|---|---|
| **Type Name :** PORTRequestedPathsType<br>**Comments :** | | | |
| **Type Definition** | | | |
| SEQUENCE | {none | CMNPermittedPathsType, | |
| | tree | CMNPermittedPathsType, | |
| | peer | CMNPermittedPathsType | } |

| ASN.1 Type Definition | | | |
|---|---|---|---|
| **Type Name :** PORTUndesiredConnectionDataType<br>**Comments :** | | | |
| **Type Definition** | | | |
| SEQUENCE | {multipleoccurrence | CMNFlag DEFAULT FALSE, | |
| | undesiredconnectiontype | PORTUndesiredConnectionType | } |

| ASN.1 Type Definition | | | |
|---|---|---|---|
| **Type Name :** PORTUndesiredConnectionType<br>**Comments :** | | | |
| **Type Definition** | | | |
| SEQUENCE | {porttype | CMNPortType, | |
| | connectstate | PORTConnectStateType, | |
| | pcneighbor | CMNPortType, | |
| | pcwithhold | PORTPC_WithholdType | } |


Copyright International Organization for Standardization
Provided by IHS under license with ISO
No reproduction or networking permitted without license from IHS
Not for Resale

#### 9.2.1.7 ASN.1 Type Definitions for SMT InfoField

##### 9.2.1.7.1 NIF InfoField Type Definition

| ASN.1 Type Definition | | |
|---|---|---|
| **Type Name :** NIF_Info<br>**Comments :** | | |
| **Type Definition** | | |
| SET | {UNA | UNA_GENERAL, |
| | stationdescriptor | StationDescriptor_GENERAL, |
| | stationstate | StationState_GENERAL, |
| | macframestatusfunctions | MACFrameStatusFunctions } |

##### 9.2.1.7.2 SIF InfoField Type Definition

| ASN.1 Type Definition | | |
|---|---|---|
| **Type Name :** SIFConf_Res<br>**Comments :** | | |
| **Type Definition** | | |
| SET | {msgtimestamp | MsgTimeStamp_GENERAL, |
| | stationdescriptor | StationDescriptor_GENERAL, |
| | smtsupportedversions | SMTSupportedVersions_GENERAL, |
| | stationstatus | StationStatus_GENERAL, |
| | stationpolicies | StationPolicies_GENERAL, |
| | pathlatency | PathLatency_GENERAL OPTIONAL, |
| | macneighbors | MACNeighbors_GENERAL, |
| | pathdescriptor | PathDescriptor_GENERAL, |
| | smtsetcount | SMTSetCount OPTIONAL } |

| ASN.1 Type Definition | | |
|---|---|---|
| **Type Name :** SIFOper_Res<br>**Comments :** | | |
| **Type Definition** | | |
| SET | {msgtimestamp | MsgTimeStamp_GENERAL, |
| | macstatus | MACStatus_GENERAL, |
| | portlemstatus | PortLEMStatus_GENERAL, |
| | macframecount | MACFrameCount_GENERAL, |
| | macframenotcount | MACFrameNotCount_GENERAL OPTIONAL, |
| | macpriorityvalues | MACPriorityValues_GENERAL OPTIONAL, |
| | portebstatus | PortEBStatus_GENERAL OPTIONAL, |
| | manufacturerfield | ManufacturerField_GENERAL OPTIONAL, |
| | userfield | UserField_GENERAL, |
| | smtsetcount | SMTSetCount OPTIONAL } |



Copyright International Organization for Standardization
Provided by IHS under license with ISO
No reproduction or networking permitted without license from IHS Not for Resale

#### 9.2.1.7.3 NO ECHO InfoField Type Definition is defined!!

#### 9.2.1.7.4 RAF InfoField Type Definition

| ASN.1 Type Definition | | |
|---|---|---|
| **Type Name :** SBARequest_Info<br>**Comments :** | | |
| **Type Definition** | | |
| SET | {pathtype | PATHIndex, |
| | sbapayload | SBAPayloadRequest_GENERAL, |
| | sbaoverhead | SBAOverheadRequest_GENERAL, |
| | currentsbapayload | PATHSbaPayload, |
| | currentsbaoverhead | PATHSbaOverhead, |
| | allocationaddress | SBAAllocationAddress_GENERAL, |
| | catagory | SBACatagory_GENERAL, |
| | maxtneg | MaximumT_Neg_GENERAL, |
| | minsbasegment | MinimumSBASegment_GENERAL |
| | } | |

| ASN.1 Type Definition | | |
|---|---|---|
| **Type Name :** SBARequest_Response<br>**Comments :** | | |
| **Type Definition** | | |
| SET | {reasoncode | ReasonCode_GENERAL, |
| | pathtype | PATHIndex, |
| | currentsbapayload | PATHSbaPayload, |
| | currentsbaoverhead | PATHSbaOverhead, |
| | allocationaddress | SBAAllocationAddress_GENERAL, |
| | catagory | SBACatagory_GENERAL, |
| | sbaallocatable | SBAAllocatable_GENERAL |
| | } | |

| ASN.1 Type Definition | | |
|---|---|---|
| **Type Name :** SBAReport_Response<br>**Comments :** | | |
| **Type Definition** | | |
| SET | {pathtype | PATHIndex, |
| | currentsbapayload | PATHSbaPayload, |
| | currentsbaoverhead | PATHSbaOverhead |
| | pathtype | PATHIndex OPTIONAL, |
| | currentsbapayload | PATHSbaPayload OPTIONAL, |
| | currentsbaoverhead | PATHSbaOverhead OPTIONAL |
| | } | |

--`,,```,,,,````-`-`,,`,,`,`,,`---



Copyright International Organization for Standardization
Provided by IHS under license with ISO
No reproduction or networking permitted without license from IHS
Not for Resale

| ASN.1 Type Definition | | |
|---|---|---|
| **Type Name :** SBAChange_Info<br>**Comments :** | | |
| **Type Definition** | | |
| SET | {pathtype<br>newsbapayload<br>newsbaoverhead<br>catagory<br>} | PATHIndex,<br>PATHSbaPayload,<br>PATHSbaOverhead,<br>SBACatagory_GENERAL |

| ASN.1 Type Definition | | |
|---|---|---|
| **Type Name :** SBAChange_Response<br>**Comments :** | | |
| **Type Definition** | | |
| SET | {pathtype<br>currentsbapayload<br>currentsbaoverhead<br>catagory<br>} | PATHIndex,<br>PATHSbaPayload,<br>PATHSbaOverhead,<br>SBACatagory_GENERAL |

### 9.2.1.7.5 RDF InfoField Type Definition

| ASN.1 Type Definition | | |
|---|---|---|
| **Type Name :** RDF_Info<br>**Comments :** | | |
| **Type Definition** | | |
| SET | {reasoncode<br>smtsupportedversions<br>rejectedframe | ReasonCode_GENERAL,<br>SMTSupportedVersions_GENERAL OPTIONAL,<br>RejectedFrame_GENERAL OPTIONAL } |

### 9.2.1.7.6 ESF InfoField Type Definition

| ASN.1 Type Definition | | |
|---|---|---|
| **Type Name :** ESF_Info<br>**Comments :** | | |
| **Type Definition** | | |
| SET | {ESFID<br>OTHER | ESFID_GENERAL,<br>TBD} |



Copyright International Organization for Standardization
Provided by IHS under license with ISO
No reproduction or networking permitted without license from IHS
Not for Resale

#### 9.2.1.7.7 SRF InfoField Type Definition

| ASN.1 Type Definition | | |
|---|---|---|
| **Type Name :** SRF_Info<br>**Comments :** | | |
| **Type Definition** | | |
| SET {TimeStamp<br>TransitionTimeStamp<br>eventcondition | SMTTimeStamp,<br>SMTTransitionTimeStamp,<br>TBD } | |

#### 9.2.1.7.8 PMF InfoField Type Definition

| ASN.1 Type Definition | | |
|---|---|---|
| **Type Name :** PMFGetResponse_INFO<br>**Comments :** | | |
| **Type Definition** | | |
| SET {reasoncode<br>timestamp<br>setcount<br>lastsetstaionid<br>getresponseinfo<br>} | ReasonCode_GENERAL,<br>SMTTimeStamp,<br>SMTSetCount DEFAULT { },<br>SMTLastSetStationId DEFAULT { },<br>ANY -- requested parameter(s) | |

| ASN.1 Type Definition | | |
|---|---|---|
| **Type Name :** PMFSetRequest_INFO<br>**Comments :** | | |
| **Type Definition** | | |
| SET {authorization<br>setcount<br>setrequestinfo<br>} | Authorization_GENERAL DEFAULT { },<br>SMTSetCount DEFAULT { },<br>ANY | |

| ASN.1 Type Definition | | |
|---|---|---|
| **Type Name :** PMFSetResponse_INFO<br>**Comments :** | | |
| **Type Definition** | | |
| SET {reasoncode<br>timestamp<br>setcount<br>lastsetstationid<br>setresponseinfo<br>} | ReasonCode_GENERAL,<br>SMTTimeStamp,<br>SMTSetCount,<br>SMTLastSetStationId,<br>ANY | |


Copyright International Organization for Standardization
Provided by IHS under license with ISO
No reproduction or networking permitted without license from IHS Not for Resale

#### 9.2.1.8 Test Suite Operation Definition

| Test Suite Operation Definition | |
|---|---|
| **Operation Name** | **:** ECH_DATA(length: INTEGER) |
| **Result Type** | **:** OCTETSTRING |
| **Comments** | **:** |
| **Description** | |
| ECH_DATA is an operator defined any length characters.<br>For example: ECH_DATA(5) = “sgGer”<br>ECH_DATA(21) = “Any Length Characters” | |

### 9.2.2 Parameterizations and Selection of Test Cases

#### 9.2.2.1 Test Suite Parameter Declarations

| Test Suite Parameter Declarations | | | |
|---|---|---|---|
| **Parameter Name** | **Type** | **PICS/PIXIT Ref** | **Comments** |
| MIB_INDEX | OCTETSTRING | PIXIT x.x.x | |
| MAC_INDEX | OCTETSTRING | PIXIT x.x.x | |
| PATH_INDEX | OCTETSTRING | PIXIT x.x.x | |
| PORT_INDEX | OCTETSTRING | PIXIT x.x.x | |
| T_REQ | | PIXIT x.x.x | |
| T_MAX | | PIXIT x.x.x | |
| TVXValue | | PIXIT x.x.x | |
| NodeClass | HEXSTRING | PICS x.x.x | ‘00’..’01’H |
| Macct | HEXSTRING | PICS x.x.x | ’00’..’FF’H |
| NonMaster_Ct | HEXSTRING | PICS x.x.x | ’00’..’02’H |
| NodeMaster_Ct | HEXSTRING | PICS x.x.x | ’00’..’FF’H |

#### 9.2.2.2 Test Case Selection Expressions

| Test Case Selection Expression Definitions | | |
|---|---|---|
| **Expression Name** | **Selection Expression** | **Comments** |
| | | |



Copyright International Organization for Standardization
Provided by IHS under license with ISO
No reproduction or networking permitted without license from IHS
Not for Resale

#### 9.2.2.3 Test Suite Constant Declaration

| Test Suite Constant Declarations | | | |
|---|---|---|---|
| **Constant Name** | **Type** | **Value** | **Comments** |
| JK | SYMBOL[2] | ‘1100010001’B | Start Delimiter |
| TT | SYMBOL[2] | ‘0110101101’B | End Delimiter |
| T | SYMBOL | ‘01101’B | T Symbol |
| SET | SYMBOL | ‘11001’B | SET Symbol |
| RESET | SYMBOL | ‘00111’B | RESET Symbol |
| PAD_1 | HEXADECIMAL | 00 | |
| PAD_2 | HEXADECIMAL | 0000 | |
| PAD_3 | HEXADECIMAL | 000000 | |
| SMT_Directed_Beacon_DA | HEXADECIMAL | 800143008000 | MSB Representation |
| SMT_SRF_DA | HEXADECIMAL | 800143008008 | MSB Representation |
| AllFDDIConcentratorMACs | HEXADECIMAL | 800143008004 | MSB Representation |
| SMT_SBA_DA | HEXADECIMAL | 80014300800C | MSB Representation |
| SMT_Unknown_Address | HEXADECIMAL | 00001F000000 | MSB Representation |
| Broadcast | HEXADECIMAL | FFFFFFFFFFFF | MSB Representation |

#### 9.2.2.4 Test Suite Variable Declarations

| Test Suite Variable Declarations | | | |
|---|---|---|---|
| **Variable Name** | **Type** | **Value** | **Comments** |
| TESTER_ADDRESS | OCTETSTRING(SIZE(6)) | | Canonical order in HEX value |
| TESTER_ADDRESS2 | OCTETSTRING(SIZE(6)) | | Canonical order in HEX value |
| IUT_ADDRESS | OCTETSTRING(SIZE(6)) | | Canonical order in HEX value |
| OUI_REF | OCTETSTRING(SIZE(3)) | | Manufacturer OUI |
| VENDOR_OCTET | OCTETSTRING(SIZE(1)) | | Vendor octet |
| IMPLEMENT_OCTET | OCTETSTRING(SIZE(2)) | | Implementer octet |
| PORTINDEX_REF | OCTETSTRING(SIZE(2)) | A:<br>B:<br>S:<br>M: | Implementer shall list all PORT Indexes |
| PATHINDEX_REF | OCTETSTRING(SIZE(2)) | primary:<br>secondary:<br>local: | Implementer shall list all PATH Indexes including primary, secondary, and local PATH (if appropriate) |
| MACINDEX_REF | OCTETSTRING(SIZE(2))<br>OCTETSTRING(SIZE(2)) | | Implementer shall list all MAC Indexes on the IUT |

--`,,```,,,,````-`-`,,`,,`,`,,`---



Copyright International Organization for Standardization
Provided by IHS under license with ISO
No reproduction or networking permitted without license from IHS
Not for Resale

### 9.2.3 Test Case Declarations and Definitions

#### 9.2.3.1 Test Case Variable Declarations

| Test Case Variable Declarations | | | |
|---|---|---|---|
| **Variable Name** | **Type** | **Value** | **Comments** |
| | | | |

#### 9.2.3.2 Timer Declarations

| Timer Declarations | | | |
|---|---|---|---|
| **Timer Name** | **Duration** | **Unit** | **Comments** |
| TIMER30 | 30 | sec | Tester timer for the interval between successive iterations of the Neighbor Notification Protocol. |
| TIMER228 | 228 | sec | Tester timer for the maximum interval between successive NIF receptions from the upstream and downstream neighbors to maintain neighbor information validity. |
| T_Limit | 2 | sec | The Rate-limiting interval for the Status Report protocol. |
| TIMER60 | 60 | sec | The interval of the test timer of which awaits the receiving a frame from the IUT |
| TRT | T_REQ | us | Token Rotation Timer |
| Timer_TVX | TVXvalue | sec | Valid Transmission Timer |
| D_MAX | 1617 | us | Maximum Ring Latency Timer |
| OPR_TIMER | 180 | sec | Operator Timer during testing when an implicit send event is required. |
| | | | |



--`,,```,,,,````-`-`,,`,,`,`,,`---
Copyright International Organization for Standardization
Provided by IHS under license with ISO
No reproduction or networking permitted without license from IHS
Not for Resale

#### 9.2.3.3 ASN.1 PDU Type Definition

##### 9.2.3.3.1 NIF PDU Type Definition

| ASN.1 PDU Type Definition | | |
|---|---|---|
| **PDU Name:** NIF_Frame<br>**PCO Type:**<br>**Comments:** | | |
| **Type Definition** | | |
| SEQUENCE | {SD | SYMBOL(SIZE(2)), |
| | FC | OCTETSTRING(SIZE(1)), |
| | DA | OCTETSTRING(SIZE(6)), |
| | SA | OCTETSTRING(SIZE(6)), |
| | Frame_Class | OCTETSTRING(SIZE(1)), |
| | Frame_Type | OCTETSTRING(SIZE(1)), |
| | Version_ID | OCTETSTRING(SIZE(2)), |
| | Transaction_ID | OCTETSTRING(SIZE(4)), |
| | Station_ID1 | OCTETSTRING(SIZE(2)), |
| | Station_ID2 | OCTETSTRING(SIZE(6)), |
| | PAD | OCTETSTRING(SIZE(2)), |
| | InfoField_Length | OCTETSTRING(SIZE(2)), |
| | Info | NIF_Info, |
| | FCS | SYMBOL(SIZE(4)), |
| | ED | SYMBOL(SIZE(1)), |
| | FS_E | SYMBOL(SIZE(1)), |
| | FS_A | SYMBOL(SIZE(1)), |
| | FS_C | SYMBOL(SIZE(1)), |
| | FS_2 | SYMBOL(SIZE(0..4)), |
| | FS_T | SYMBOL(SIZE(1)) } |



Copyright International Organization for Standardization
Provided by IHS under license with ISO
No reproduction or networking permitted without license from IHS
Not for Resale

#### 9.2.3.3.2 SIF PDU Type Definition

| ASN.1 PDU Type Definition | | | |
|---|---|---|---|
| **PDU Name:** SIF_Frame<br>**PCO Type:**<br>**Comments:** | | | |
| **Type Definition** | | | |
| SEQUENCE | {SD | SYMBOL(SIZE(2)), | |
| | FC | OCTETSTRING(SIZE(1)), | |
| | DA | OCTETSTRING(SIZE(6)), | |
| | SA | OCTETSTRING(SIZE(6)), | |
| | Frame_Class | OCTETSTRING(SIZE(1)), | |
| | Frame_Type | OCTETSTRING(SIZE(1)), | |
| | Version_ID | OCTETSTRING(SIZE(2)), | |
| | Transaction_ID | OCTETSTRING(SIZE(4)), | |
| | Station_ID1 | OCTETSTRING(SIZE(2)), | |
| | Station_ID2 | OCTETSTRING(SIZE(6)), | |
| | PAD | OCTETSTRING(SIZE(2)), | |
| | InfoField_Length | OCTETSTRING(SIZE(2)), | |
| | CHOICE | {sifrequest | NULL, |
| | | configurationresponse | SIFConf_Res, |
| | | operationresponse | SIFOper_Res } |
| | FCS | SYMBOL(SIZE(4)), | |
| | ED | SYMBOL(SIZE(1)), | |
| | FS_E | SYMBOL(SIZE(1)), | |
| | FS_A | SYMBOL(SIZE(1)), | |
| | FS_C | SYMBOL(SIZE(1)), | |
| | FS_2 | SYMBOL(SIZE(0..4)), | |
| | FS_T | SYMBOL(SIZE(1)) } | |



Copyright International Organization for Standardization
Provided by IHS under license with ISO
No reproduction or networking permitted without license from IHS
Not for Resale

#### 9.2.3.3.3 ECHO PDU Type Definition

| ASN.1 PDU Type Definition | | |
|---|---|---|
| **PDU Name:** ECHO_Frame<br>**PCO Type:**<br>**Comments:** | | |
| **Type Definition** | | |
| SEQUENCE | {SD | SYMBOL(SIZE(2)), |
| | FC | OCTETSTRING(SIZE(1)), |
| | DA | OCTETSTRING(SIZE(6)), |
| | SA | OCTETSTRING(SIZE(6)), |
| | Frame_Class | OCTETSTRING(SIZE(1)), |
| | Frame_Type | OCTETSTRING(SIZE(1)), |
| | Version_ID | OCTETSTRING(SIZE(2)), |
| | Transaction_ID | OCTETSTRING(SIZE(4)), |
| | Station_ID1 | OCTETSTRING(SIZE(2)), |
| | Station_ID2 | OCTETSTRING(SIZE(6)), |
| | PAD | OCTETSTRING(SIZE(2)), |
| | InfoField_Length | OCTETSTRING(SIZE(2)), |
| | Info | ECHOData_GENERAL, |
| | FCS | SYMBOL(SIZE(4)), |
| | ED | SYMBOL(SIZE(1)), |
| | FS_E | SYMBOL(SIZE(1)), |
| | FS_A | SYMBOL(SIZE(1)), |
| | FS_C | SYMBOL(SIZE(1)), |
| | FS_2 | SYMBOL(SIZE(0..4)), |
| | FS_T | SYMBOL(SIZE(1)) } |


Copyright International Organization for Standardization
Provided by IHS under license with ISO
No reproduction or networking permitted without license from IHS
Not for Resale

#### 9.2.3.3.4 RAF PDU Type Definition

| ASN.1 PDU Type Definition | | | |
|---|---|---|---|
| **PDU Name:** SBA_Frame<br>**PCO Type:**<br>**Comments:** | | | |
| **Type Definition** | | | |
| SEQUENCE | {SD | SYMBOL(SIZE(2)), | |
| | FC | OCTETSTRING(SIZE(1)), | |
| | DA | OCTETSTRING(SIZE(6)), | |
| | SA | OCTETSTRING(SIZE(6)), | |
| | Frame_Class | OCTETSTRING(SIZE(1)), | |
| | Frame_Type | OCTETSTRING(SIZE(1)), | |
| | Version_ID | OCTETSTRING(SIZE(2)), | |
| | Transaction_ID | OCTETSTRING(SIZE(4)), | |
| | Station_ID1 | OCTETSTRING(SIZE(2)), | |
| | Station_ID2 | OCTETSTRING(SIZE(6)), | |
| | PAD | OCTETSTRING(SIZE(2)), | |
| | InfoField_Length | OCTETSTRING(SIZE(2)), | |
| | resourcetype | ResourceType_GENERAL, | |
| | sbacommand | SBACommand_GENERAL, | |
| | CHOICE | {requestallocation | SBARequest_Info, |
| | | reportallocation | NULL, |
| | | changeallocation | SBAChange_Info, |
| | | requestresponse | SBARequest_Response, |
| | | reportresponse | SBAReport_Response, |
| | | changeresponse | SBAChange_Response } |
| | FCS | SYMBOL(SIZE(4)), | |
| | ED | SYMBOL(SIZE(1)), | |
| | FS_E | SYMBOL(SIZE(1)), | |
| | FS_A | SYMBOL(SIZE(1)), | |
| | FS_C | SYMBOL(SIZE(1)), | |
| | FS_2 | SYMBOL(SIZE(0..4)), | |
| | FS_T | SYMBOL(SIZE(1)) | } |



Copyright International Organization for Standardization
Provided by IHS under license with ISO
No reproduction or networking permitted without license from IHS
Not for Resale

### 9.2.3.3.5 RDF PDU Type Definitions

| ASN.1 PDU Type Definition | | |
|---|---|---|
| **PDU Name:** RDF_Frame<br>**PCO Type:**<br>**Comments:** | | |
| **Type Definition** | | |
| SEQUENCE | {SD | SYMBOL(SIZE(2)), |
| | FC | OCTETSTRING(SIZE(1)), |
| | DA | OCTETSTRING(SIZE(6)), |
| | SA | OCTETSTRING(SIZE(6)), |
| | Frame_Class | OCTETSTRING(SIZE(1)), |
| | Frame_Type | OCTETSTRING(SIZE(1)), |
| | Version_ID | OCTETSTRING(SIZE(2)), |
| | Transaction_ID | OCTETSTRING(SIZE(4)), |
| | Station_ID1 | OCTETSTRING(SIZE(2)), |
| | Station_ID2 | OCTETSTRING(SIZE(6)), |
| | PAD | OCTETSTRING(SIZE(2)), |
| | InfoField_Length | OCTETSTRING(SIZE(2)), |
| | Info | RDF_Info, |
| | FCS | SYMBOL(SIZE(4)), |
| | ED | SYMBOL(SIZE(1)), |
| | FS_E | SYMBOL(SIZE(1)), |
| | FS_A | SYMBOL(SIZE(1)), |
| | FS_C | SYMBOL(SIZE(1)), |
| | FS_2 | SYMBOL(SIZE(0..4)), |
| | FS_T | SYMBOL(SIZE(1)) } |

--`,,```,,,,````-`-`,,`,,`,`,,`---



Copyright International Organization for Standardization
Provided by IHS under license with ISO
No reproduction or networking permitted without license from IHS
Not for Resale

### 9.2.3.3.6 ESF PDU Type Definitions

| ASN.1 PDU Type Definition | | |
|---|---|---|
| **PDU Name:** ESF_Frame<br>**PCO Type:**<br>**Comments:** | | |
| **Type Definition** | | |
| SEQUENCE | {SD | SYMBOL(SIZE(2)), |
| | FC | OCTETSTRING(SIZE(1)), |
| | DA | OCTETSTRING(SIZE(6)), |
| | SA | OCTETSTRING(SIZE(6)), |
| | Frame_Class | OCTETSTRING(SIZE(1)), |
| | Frame_Type | OCTETSTRING(SIZE(1)), |
| | Version_ID | OCTETSTRING(SIZE(2)), |
| | Transaction_ID | OCTETSTRING(SIZE(4)), |
| | Station_ID1 | OCTETSTRING(SIZE(2)), |
| | Station_ID2 | OCTETSTRING(SIZE(6)), |
| | PAD | OCTETSTRING(SIZE(2)), |
| | InfoField_Length | OCTETSTRING(SIZE(2)), |
| | Info | ESF_Info, |
| | FCS | SYMBOL(SIZE(4)), |
| | ED | SYMBOL(SIZE(1)), |
| | FS_E | SYMBOL(SIZE(1)), |
| | FS_A | SYMBOL(SIZE(1)), |
| | FS_C | SYMBOL(SIZE(1)), |
| | FS_2 | SYMBOL(SIZE(0..4)), |
| | FS_T | SYMBOL(SIZE(1)) } |



Copyright International Organization for Standardization
Provided by IHS under license with ISO
No reproduction or networking permitted without license from IHS
Not for Resale

### 9.2.3.3.7 SRF PDU Type Definition

| ASN.1 PDU Type Definition | | |
|---|---|---|
| **PDU Name:** SRF_Frame<br>**PCO Type:**<br>**Comments:** | | |
| **Type Definition** | | |
| SEQUENCE | {SD | SYMBOL(SIZE(2)), |
| | FC | OCTETSTRING(SIZE(1)), |
| | DA | OCTETSTRING(SIZE(6)), |
| | SA | OCTETSTRING(SIZE(6)), |
| | Frame_Class | OCTETSTRING(SIZE(1)), |
| | Frame_Type | OCTETSTRING(SIZE(1)), |
| | Version_ID | OCTETSTRING(SIZE(2)), |
| | Transaction_ID | OCTETSTRING(SIZE(4)), |
| | Station_ID1 | OCTETSTRING(SIZE(2)), |
| | Station_ID2 | OCTETSTRING(SIZE(6)), |
| | PAD | OCTETSTRING(SIZE(2)), |
| | InfoField_Length | OCTETSTRING(SIZE(2)), |
| | Info | SRF_Info, |
| | FCS | SYMBOL(SIZE(4)), |
| | ED | SYMBOL(SIZE(1)), |
| | FS_E | SYMBOL(SIZE(1)), |
| | FS_A | SYMBOL(SIZE(1)), |
| | FS_C | SYMBOL(SIZE(1)), |
| | FS_2 | SYMBOL(SIZE(0..4)), |
| | FS_T | SYMBOL(SIZE(1)) } |


Copyright International Organization for Standardization
Provided by IHS under license with ISO
No reproduction or networking permitted without license from IHS
Not for Resale

#### 9.2.3.3.8 PMF PDU Type Definition

| ASN.1 PDU Type Definition | | |
|---|---|---|
| **PDU Name:** PMFGetRequest_Frame<br>**PCO Type:**<br>**Comments:** | | |
| **Type Definition** | | |
| SEQUENCE | {SD | SYMBOL(SIZE(2)), |
| | FC | OCTETSTRING(SIZE(1)), |
| | DA | OCTETSTRING(SIZE(6)), |
| | SA | OCTETSTRING(SIZE(6)), |
| | Frame_Class | OCTETSTRING(SIZE(1)), |
| | Frame_Type | OCTETSTRING(SIZE(1)), |
| | Version_ID | OCTETSTRING(SIZE(2)), |
| | Transaction_ID | OCTETSTRING(SIZE(4)), |
| | Station_ID1 | OCTETSTRING(SIZE(2)), |
| | Station_ID2 | OCTETSTRING(SIZE(6)), |
| | PAD | OCTETSTRING(SIZE(2)), |
| | InfoField_Length | OCTETSTRING(SIZE(2)), |
| | getrequest | ANY, |
| | FCS | SYMBOL(SIZE(4)), |
| | ED | SYMBOL(SIZE(1)), |
| | FS_E | SYMBOL(SIZE(1)), |
| | FS_A | SYMBOL(SIZE(1)), |
| | FS_C | SYMBOL(SIZE(1)), |
| | FS_2 | SYMBOL(SIZE(0..4)), |
| | FS_T | SYMBOL(SIZE(1)) |
| | } | |



--`,,```,,,,````-`-`,,`,,`,`,,`---
Copyright International Organization for Standardization
Provided by IHS under license with ISO
No reproduction or networking permitted without license from IHS
Not for Resale

| ASN.1 PDU Type Definition | | |
|---|---|---|
| **PDU Name:** PMFGetResponse_Frame<br>**PCO Type:**<br>**Comments:** | | |
| **Type Definition** | | |
| SEQUENCE | {SD | SYMBOL(SIZE(2)), |
| | FC | OCTETSTRING(SIZE(1)), |
| | DA | OCTETSTRING(SIZE(6)), |
| | SA | OCTETSTRING(SIZE(6)), |
| | Frame_Class | OCTETSTRING(SIZE(1)), |
| | Frame_Type | OCTETSTRING(SIZE(1)), |
| | Version_ID | OCTETSTRING(SIZE(2)), |
| | Transaction_ID | OCTETSTRING(SIZE(4)), |
| | Station_ID1 | OCTETSTRING(SIZE(2)), |
| | Station_ID2 | OCTETSTRING(SIZE(6)), |
| | PAD | OCTETSTRING(SIZE(2)), |
| | InfoField_Length | OCTETSTRING(SIZE(2)), |
| | getresponse | PMFGetResponse_INFO, |
| | FCS | SYMBOL(SIZE(4)), |
| | ED | SYMBOL(SIZE(1)), |
| | FS_E | SYMBOL(SIZE(1)), |
| | FS_A | SYMBOL(SIZE(1)), |
| | FS_C | SYMBOL(SIZE(1)), |
| | FS_2 | SYMBOL(SIZE(0..4)), |
| | FS_T | SYMBOL(SIZE(1)) |
| | } | |


Copyright International Organization for Standardization
Provided by IHS under license with ISO
No reproduction or networking permitted without license from IHS
Not for Resale

| ASN.1 PDU Type Definition | | |
|---|---|---|
| **PDU Name:** PMFSetRequest_Frame<br>**PCO Type:**<br>**Comments:** | | |
| **Type Definition** | | |
| SEQUENCE | {SD | SYMBOL(SIZE(2)), |
| | FC | OCTETSTRING(SIZE(1)), |
| | DA | OCTETSTRING(SIZE(6)), |
| | SA | OCTETSTRING(SIZE(6)), |
| | Frame_Class | OCTETSTRING(SIZE(1)), |
| | Frame_Type | OCTETSTRING(SIZE(1)), |
| | Version_ID | OCTETSTRING(SIZE(2)), |
| | Transaction_ID | OCTETSTRING(SIZE(4)), |
| | Station_ID1 | OCTETSTRING(SIZE(2)), |
| | Station_ID2 | OCTETSTRING(SIZE(6)), |
| | PAD | OCTETSTRING(SIZE(2)), |
| | InfoField_Length | OCTETSTRING(SIZE(2)), |
| | setrequest | PMFSetRequest_INFO, |
| | FCS | SYMBOL(SIZE(4)), |
| | ED | SYMBOL(SIZE(1)), |
| | FS_E | SYMBOL(SIZE(1)), |
| | FS_A | SYMBOL(SIZE(1)), |
| | FS_C | SYMBOL(SIZE(1)), |
| | FS_2 | SYMBOL(SIZE(0..4)), |
| | FS_T | SYMBOL(SIZE(1)) |
| | } | |



Copyright International Organization for Standardization
Provided by IHS under license with ISO
No reproduction or networking permitted without license from IHS
Not for Resale

| ASN.1 PDU Type Definition | | |
|---|---|---|
| **PDU Name:** PMFSetResponse_Frame<br>**PCO Type:**<br>**Comments:** | | |
| **Type Definition** | | |
| SEQUENCE | {SD | SYMBOL(SIZE(2)), |
| | FC | OCTETSTRING(SIZE(1)), |
| | DA | OCTETSTRING(SIZE(6)), |
| | SA | OCTETSTRING(SIZE(6)), |
| | Frame_Class | OCTETSTRING(SIZE(1)), |
| | Frame_Type | OCTETSTRING(SIZE(1)), |
| | Version_ID | OCTETSTRING(SIZE(2)), |
| | Transaction_ID | OCTETSTRING(SIZE(4)), |
| | Station_ID1 | OCTETSTRING(SIZE(2)), |
| | Station_ID2 | OCTETSTRING(SIZE(6)), |
| | PAD | OCTETSTRING(SIZE(2)), |
| | InfoField_Length | OCTETSTRING(SIZE(2)), |
| | setresponse | PMFSetResponse_INFO, |
| | FCS | SYMBOL(SIZE(4)), |
| | ED | SYMBOL(SIZE(1)), |
| | FS_E | SYMBOL(SIZE(1)), |
| | FS_A | SYMBOL(SIZE(1)), |
| | FS_C | SYMBOL(SIZE(1)), |
| | FS_2 | SYMBOL(SIZE(0..4)), |
| | FS_T | SYMBOL(SIZE(1)) |
| | } | |


Copyright International Organization for Standardization
Provided by IHS under license with ISO
No reproduction or networking permitted without license from IHS
Not for Resale

#### 9.2.3.3.9 ERROR PDU Type Definition

| ASN.1 PDU Type Definition | | |
|---|---|---|
| **PDU Name:** ERROR_Frame<br>**PCO Type:**<br>**Comments:** | | |
| **Type Definition** | | |
| SEQUENCE | {SD | SYMBOL(SIZE(2)), |
| | FC | OCTETSTRING(SIZE(1)), |
| | DA | OCTETSTRING(SIZE(6)), |
| | SA | OCTETSTRING(SIZE(6)), |
| | Frame_Class | OCTETSTRING(SIZE(1)), |
| | Frame_Type | OCTETSTRING(SIZE(1)), |
| | Version_ID | OCTETSTRING(SIZE(2)), |
| | Transaction_ID | OCTETSTRING(SIZE(4)), |
| | Station_ID1 | OCTETSTRING(SIZE(2)), |
| | Station_ID2 | OCTETSTRING(SIZE(6)), |
| | PAD | OCTETSTRING(SIZE(2)), |
| | InfoField_Length | OCTETSTRING(SIZE(2)), |
| | FCS | SYMBOL(SIZE(4)), |
| | ED | SYMBOL(SIZE(1)), |
| | FS_E | SYMBOL(SIZE(1)), |
| | FS_A | SYMBOL(SIZE(1)), |
| | FS_C | SYMBOL(SIZE(1)), |
| | FS_2 | SYMBOL(SIZE(0..4)), |
| | FS_T | SYMBOL(SIZE(1)) |
| | } | |

#### 9.2.3.3.10 Synchronous PDU Type Definition

| ASN.1 PDU Type Definition | | |
|---|---|---|
| **PDU Name:** SYNC_Frame<br>**PCO Type:**<br>**Comments:** | | |
| **Type Definition** | | |
| SEQUENCE | {SD | SYMBOL(SIZE(2)), |
| | FC | OCTETSTRING(SIZE(1)), |
| | DA | OCTETSTRING(SIZE(6)), |
| | SA | OCTETSTRING(SIZE(6)), |
| | INFO | OCTETSTRING(SIZE(2)), |
| | FCS | SYMBOL(SIZE(4)), |
| | ED | SYMBOL(SIZE(1)), |
| | FS_E | SYMBOL(SIZE(1)), |
| | FS_A | SYMBOL(SIZE(1)), |
| | FS_C | SYMBOL(SIZE(1)), |
| | FS_2 | SYMBOL(SIZE(0..4)), |
| | FS_T | SYMBOL(SIZE(1)) |
| | } | |



Copyright International Organization for Standardization
Provided by IHS under license with ISO
No reproduction or networking permitted without license from IHS
Not for Resale

## 9.3 Constraint Parts

### 9.3.1 ASN.1 Type Constraint Declaration

| ASN.1 Type Constraint Declaration | | |
|---|---|---|
| **Constraint Name** | : | SMT73MIB_00 |
| **Structured Type** | : | SMTMIBGRP_Group |
| **Comments** | : | |

| Constraint Value | | |
|---|---|---|
| { | smtstationIdgrp | SMTStationId_Grp_00, |
| | smtstationconfiggrp | SMTStationConfig_Grp_00, |
| | smtstatusgrp | SMTStatus_Grp_00, |
| | smtmiboperationgrp | SMTMIBOperation_Grp_00, |
| | maccapabilitiesgrp | MACCapabilities_Grp_00, |
| | macconfiggrp | MACConfig_Grp_00, |
| | macaddressgrp | MACAddress_Grp_00, |
| | macoperationgrp | MACOperation_Grp_00, |
| | maccountersgrp | MACCounters_Grp_00, |
| | macframeerrorconditiongrp | MACFrameErrorCondition_Grp_00, |
| | macnotcopiedconditiongrp | MACNotCopiedCondition_Grp_00, |
| | macstatusgrp | MACStatus_Grp_00, |
| | pathconfiggrp | PATHConfig_Grp_00, |
| | portlergrp | PORTLer_Grp_00, |
| | portoperationgrp | PORTOperation_Grp_00, |
| | porterrorctrsgrp | PORTErrorCtrs_Grp_00, |
| | portlergrp | PORTLer_Grp_00, |
| | portstatusgrp | PORTStatus_Grp_00 } |

| ASN.1 Type Constraint Declaration | | |
|---|---|---|
| **Constraint Name** | : | ValidMultiple_PmfGet |
| **Structure Type** | : | ValidMultiple_Attributes |
| **Derivation Path** | : | |
| **Comments** | : | |

| Constraint Value | | |
|---|---|---|
| { | stationid | SMTStationId_PmfGet, |
| | opversionid | SMTOpVersionId_PmfGet } |



Copyright International Organization for Standardization
Provided by IHS under license with ISO
No reproduction or networking permitted without license from IHS
Not for Resale

| ASN.1 Type Constraint Declaration | | |
|---|---|---|
| **Constraint Name** | : | ValidMultiple_Pmf_00 |
| **Structure Type** | : | ValidMultiple_Attributes |
| **Derivation Path** | : | |
| **Comments** | : | |

| Constraint Value | | |
|---|---|---|
| { | stationid | SMTStationId_01, |
| | opversionid | SMTOpVersionId_01 } |

| ASN.1 Type Constraint Declaration | | |
|---|---|---|
| **Constraint Name** | : | InvalidMultiple_PmfGet |
| **Structure Type** | : | InvalidMultiple_Attributes |
| **Derivation Path** | : | |
| **Comments** | : | |

| Constraint Value | | |
|---|---|---|
| { | stationid | SMTStationId_PmfGet, |
| | framestatusfunctions | MACFrameStatusFunctions_PmfGet } |

| ASN.1 Type Constraint Declaration | | |
|---|---|---|
| **Constraint Name** | : | InvalidMultiple_Pmf_00 |
| **Structure Type** | : | InvalidMultiple_Attributes |
| **Derivation Path** | : | |
| **Comments** | : | |

| Constraint Value | | |
|---|---|---|
| { | stationid | SMTStationId_Q, |
| | framestatusfunctions | MACFrameStatusFunctions_PmfGet } |



Copyright International Organization for Standardization
Provided by IHS under license with ISO
No reproduction or networking permitted without license from IHS
Not for Resale

| ASN.1 Type Constraint Declaration | | |
|---|---|---|
| **Constraint Name** | : | ValidMultipleGrp_PmfGet |
| **Structure Type** | : | ValidMultiple_Group |
| **Derivation Path** | : | |
| **Comments** | : | |

| Constraint Value | | |
|---|---|---|
| { | smtstationidgrp | SMTStationId_Grp_00, |
| | smtstationconfiggrp | SMTStationConfig_Grp_00 } |

| ASN.1 Type Constraint Declaration | | |
|---|---|---|
| **Constraint Name** | : | ValidMultipleGrp_Pmf_00 |
| **Structure Type** | : | ValidMultiple_Group |
| **Derivation Path** | : | |
| **Comments** | : | |

| Constraint Value | | |
|---|---|---|
| { | smtstationidgrp | SMTStationId_Grp_00, |
| | smtstationconfiggrp | SMTStationConfig_Grp_00 } |

| ASN.1 Type Constraint Declaration | | |
|---|---|---|
| **Constraint Name** | : | InvalidMultipleGrp_PmfGet |
| **Structure Type** | : | InvalidMultiple_Group |
| **Derivation Path** | : | |
| **Comments** | : | |

| Constraint Value | | |
|---|---|---|
| { | smtstationidgrp | SMTStationId_Grp_00, |
| | capabilitiesgrp | MACCapabilities_Grp_PmfGet } |

| ASN.1 Type Constraint Declaration | | |
|---|---|---|
| **Constraint Name** | : | InvalidMultipleGrp_Pmf_00 |
| **Structure Type** | : | InvalidMultiple_Group |
| **Derivation Path** | : | |
| **Comments** | : | |

| Constraint Value | | |
|---|---|---|
| { | smtstationidgrp | SMTStationId_Grp_00, |
| | capabilitiesgrp | MACCapabilities_Grp_00 } |


Copyright International Organization for Standardization
Provided by IHS under license with ISO
No reproduction or networking permitted without license from IHS
Not for Resale

| ASN.1 Type Constraint Declaration | | |
|---|---|---|
| **Constraint Name** | : | UNA_UNKNOWN |
| **Structure Type** | : | UNA_GENERAL |
| **Derivation Path** | : | |
| **Comments** | : | |

| Constraint Value | | |
|---|---|---|
| { | Parameter_Type | ‘0001’H, |
| | Parameter_Length | ‘0008’H, |
| | PAD | PAD_2, |
| | una | SMT_Unknown_Address } |

| ASN.1 Type Constraint Declaration | | |
|---|---|---|
| **Constraint Name** | : | StationDescriptor_Q |
| **Structured Type** | : | StationDescriptor_GENERAL |
| **Derivation Path** | : | |
| **Comments** | : | |

| Constraint Value | | |
|---|---|---|
| { | Parameter_Type | ‘0002’H, |
| | Parameter_Length | ‘0004’H, |
| | NodeClass | (‘00’H, ‘01’H), |
| | Macct | ? |
| | NonMaster_Ct | (‘00’H, ‘01’H, ‘02’H), |
| | Master_Ct | ? } |

| ASN.1 Type Constraint Declaration | | |
|---|---|---|
| **Constraint Name** | : | StationState_Q |
| **Structured Type** | : | StationState_GENERAL |
| **Derivation Path** | : | |
| **Comments** | : | |

| Constraint Value | | |
|---|---|---|
| { | Parameter_Type | ‘0003’H, |
| | Parameter_Length | ‘0004’H, |
| | PAD | PAD_2, |
| | Topology | Topology_Q, |
| | DupAddress | DuplAddress_Q } |

--`,,```,,,,````-`-`,,`,,`,`,,`---



Copyright International Organization for Standardization
Provided by IHS under license with ISO
No reproduction or networking permitted without license from IHS
Not for Resale

| ASN.1 Type Constraint Declaration | | |
|---|---|---|
| **Constraint Name** | : | MsgTimeStamp_Q |
| **Structured Type** | : | MsgTimeStamp_GENERAL |
| **Derivation Path** | : | |
| **Comments** | : | |

| Constraint Value | | |
|---|---|---|
| { | Parameter_Type | ‘0004’H, |
| | Parameter_Length | ‘0008’H, |
| | msgtimestamp | SMTTimeStampType_Q} |

| ASN.1 Type Constraint Declaration | | |
|---|---|---|
| **Constraint Name** | : | StationPolicies_Q |
| **Structured Type** | : | StationPolicies_GENERAL |
| **Derivation Path** | : | |
| **Comments** | : | |

| Constraint Value | | |
|---|---|---|
| { | Parameter_Type | ‘0005’H, |
| | Parameter_Length | ‘0004’H, |
| | configpolicy | SMTConfigPolicyType_Q, |
| | connectionpolicy | SMTConnectionPolicyType_Q } |

| ASN.1 Type Constraint Declaration | | |
|---|---|---|
| **Constraint Name** | : | PathLatency_01 |
| **Structured Type** | : | PathLatency_GENERAL |
| **Derivation Path** | : | |
| **Comments** | : | |

| Constraint Value | | | |
|---|---|---|---|
| { | Parameter_Type | ‘0006’H, | |
| | Parameter_Length | ‘0008’H, | |
| | PORTOutIndex | ?, | |
| | PathLatencyRing1 | ?, | |
| | PORTOutIndex | ‘0000’H, | -- Single attach |
| | PathLatencyRing2 | ‘0000’H | -- Single attach } |


--`,,```,,,,````-`-`,,`,,`,`,,`---
Copyright International Organization for Standardization
Provided by IHS under license with ISO
No reproduction or networking permitted without license from IHS
Not for Resale

| ASN.1 Type Constraint Declaration | | |
|---|---|---|
| **Constraint Name** | : | MACNeighbors_Q |
| **Structured Type** | : | MACNeighbors_GENERAL |
| **Derivation Path** | : | |
| **Comments** | : | |

| Constraint Value | | |
|---|---|---|
| { | Parameter_Type | ‘0007’H, |
| | Parameter_Length | ‘0010’H, |
| | mibindex | MIBINDEX_REF, |
| | macindex | MACINDEX_REF, |
| | una | MACUpstreamNbrType_Q, |
| | dna | MACDownstreamNbrType_Q } |

| ASN.1 Type Constraint Declaration | | |
|---|---|---|
| **Constraint Name** | : | PathDescriptor_Q |
| **Structured Type** | : | PathDescriptor_GENERAL |
| **Derivation Path** | : | |
| **Comments** | : | |

| Constraint Value | | |
|---|---|---|
| { | Parameter_Type | ‘0008’H, |
| | Parameter_Length | ?, |
| | mibindex | MIBINDEX_REF, |
| | PortType | CMNPortType_Q, |
| | ConnectState | PORTConnectStateType_Q, |
| | RemotePORTType | CMNPortType_Q, |
| | RemoteMAC | PORTMACIndicatedType_Q, |
| | ConResourceIndex | ‘0001’H..’FFFF’H, |
| | MAC_Addr | ?, |
| | ConResourceIndex | ‘0001’H..’FFFF’H } |



Copyright International Organization for Standardization
Provided by IHS under license with ISO
No reproduction or networking permitted without license from IHS
Not for Resale

| ASN.1 Type Constraint Declaration | | |
|---|---|---|
| **Constraint Name** | : | MACStatus_Q |
| **Structured Type** | : | MACStatus_GENERAL |
| **Derivation Path** | : | |
| **Comments** | : | |

| Constraint Value | | |
|---|---|---|
| { | Parameter_Type | ‘0009’H, |
| | Parameter_Length | ‘0028’H, |
| | mibindex | MIBINDEX_REF, |
| | macindex | MACINDEX_REF, |
| | T_Req | MACTReqType_Q, |
| | T_Neg | MACTNegType_Q, |
| | T_Max | MACTMaxType_Q, |
| | TVXValue | MACTVXValueType_Q, |
| | T_Min | CMNTwosComplementType_Q, |
| | SBA | PATHSbaPayloadType_Q, |
| | Frame_Ct | MACFrame_CtType_Q, |
| | Error_Ct | MACError_CtType_Q, |
| | Lost_Ct | MACLost_CtType_Q } |

| ASN.1 Type Constraint Declaration | | |
|---|---|---|
| **Constraint Name** | : | PortLERStatus_Q |
| **Structured Type** | : | PortLERStatus_GENERAL |
| **Derivation Path** | : | |
| **Comments** | : | |

| Constraint Value | | |
|---|---|---|
| { | Parameter_Type | ‘000A’H, |
| | Parameter_Length | ‘0010’H, |
| | mibindex | MIBINDEX_REF, |
| | portindex | PORTINDEX_REF, |
| | PAD | PAD_1, |
| | Ler_Cutoff | ‘04’H..’0F’H, |
| | Ler_Alarm | ‘04’H..’0F’H, |
| | Ler_Estimate | PORTLerExponentType_Q, |
| | Lem_Reject_Ct | PORTLem_Reject_CtType_Q, |
| | Lem_Ct | PORTLem_CtType_Q } |


Copyright International Organization for Standardization
Provided by IHS under license with ISO
No reproduction or networking permitted without license from IHS
Not for Resale

| ASN.1 Type Constraint Declaration | | |
|---|---|---|
| **Constraint Name** | : | MACFrameCounters_Q |
| **Structured Type** | : | MACFrameCounters_GENERAL |
| **Derivation Path** | : | |
| **Comments** | : | |

| Constraint Value | | |
|---|---|---|
| { | Parameter_Type | ‘000B’H, |
| | Parameter_Length | ‘000C’H, |
| | mibindex | MIBINDEX_REF, |
| | macindex | MACINDEX_REF, |
| | Copied_Ct | MACCopied_CtType_Q, |
| | Transmit_Ct | MACTransmit_CtType_Q } |

| ASN.1 Type Constraint Declaration | | |
|---|---|---|
| **Constraint Name** | : | MACFrameNotCopiedCount_Q |
| **Structured Type** | : | MACFrameNotCopiedCount_GENERAL |
| **Derivation Path** | : | |
| **Comments** | : | |

| Constraint Value | | |
|---|---|---|
| { | Parameter_Type | ‘000C’H, |
| | Parameter_Length | ‘0008’H, |
| | mibindex | MIBINDEX_REF, |
| | macindex | MACINDEX_REF, |
| | NotCopied_Ct | MACNotCopied_CtType_Q } |

| ASN.1 Type Constraint Declaration | | |
|---|---|---|
| **Constraint Name** | : | MACPriorityValues_Q |
| **Structured Type** | : | MACPriorityValues_GENERAL |
| **Derivation Path** | : | |
| **Comments** | : | |

| Constraint Value | | |
|---|---|---|
| { | Parameter_Type | ‘000D’H, |
| | Parameter_Length | ‘0020’H, |
| | mibindex | MIBINDEX_REF, |
| | macindex | MACINDEX_REF, |
| | T_Pri0 | MACT_Pri0Type_Q, |
| | T_Pri1 | MACT_Pri1Type_Q, |
| | T_Pri2 | MACT_Pri2Type_Q, |
| | T_Pri3 | MACT_Pri3Type_Q, |
| | T_Pri4 | MACT_Pri4Type_Q, |
| | T_Pri5 | MACT_Pri5Type_Q, |
| | T_Pri6 | MACT_Pri6Type_Q } |



Copyright International Organization for Standardization
Provided by IHS under license with ISO
No reproduction or networking permitted without license from IHS
Not for Resale

| ASN.1 Type Constraint Declaration | | |
|---|---|---|
| **Constraint Name** | : | PortElasticityBuffer_Q |
| **Structured Type** | : | PortElasticityBuffer_GENERAL |
| **Derivation Path** | : | |
| **Comments** | : | |

| Constraint Value | | |
|---|---|---|
| { | Parameter_Type | ‘000E’H, |
| | Parameter_Length | ‘0008’H, |
| | mibindex | MIBINDEX_REF, |
| | portindex | PORTINDEX_REF, |
| | EbErrorCt | PORTEBError_CtType_Q } |

| ASN.1 Type Constraint Declaration | | |
|---|---|---|
| **Constraint Name** | : | ManufacturerField_Q |
| **Structured Type** | : | ManufacturerField_GENERAL |
| **Derivation Path** | : | |
| **Comments** | : | |

| Constraint Value | | |
|---|---|---|
| { | Parameter_Type | ‘000F’H, |
| | Parameter_Length | ‘0020’H, |
| | manuf_data | SMTManufacturerDataType_Q } |

| ASN.1 Type Constraint Declaration | | |
|---|---|---|
| **Constraint Name** | : | UserField_Q |
| **Structured Type** | : | UserField_GENERAL |
| **Derivation Path** | : | |
| **Comments** | : | |

| Constraint Value | | |
|---|---|---|
| { | Parameter_Type | ‘0010’H, |
| | Parameter_Length | ‘0020’H, |
| | user_data | SMTUserDataType_Q } |

| ASN.1 Type Constraint Declaration | | |
|---|---|---|
| **Constraint Name** | : | ECHOData_MAX |
| **Structured Type** | : | ECHOData_GENERAL |
| **Derivation Path** | : | |
| **Comments** | : | |

| Constraint Value | | |
|---|---|---|
| { | Parameter_Type | ‘0011’H, |
| | Parameter_Length | ’1166’H, |
| | echo_data | ECH_DATA(4454) } -- maximum length of ECHO data |


Copyright International Organization for Standardization
Provided by IHS under license with ISO
No reproduction or networking permitted without license from IHS Not for Resale

| ASN.1 Type Constraint Declaration | | |
|---|---|---|
| **Constraint Name** | : | ReasonCode_Q |
| **Structured Type** | : | ReasonCode_GENERAL |
| **Derivation Path** | : | |
| **Comments** | : | |

| Constraint Value | | |
|---|---|---|
| { | Parameter_Type | ‘0012’H, |
| | Parameter_Length | ‘0004’H, |
| | reason | ? } |

| ASN.1 Type Constraint Declaration | | |
|---|---|---|
| **Constraint Name** | : | RejectedFrame_Q |
| **Structured Type** | : | RejectedFrame_GENERAL |
| **Derivation Path** | : | |
| **Comments** | : | |

| Constraint Value | | |
|---|---|---|
| { | Parameter_Type | ‘0013’H, |
| | Parameter_Length | ?, |
| | PAD | PAD_2, |
| | rejected_frame_beginning | ? } |

| ASN.1 Type Constraint Declaration | | |
|---|---|---|
| **Constraint Name** | : | SMTSupportedVersions_Q |
| **Structured Type** | : | SMTSupportedVersions_GENERAL |
| **Derivation Path** | : | |
| **Comments** | : | |

| Constraint Value | | |
|---|---|---|
| { | Parameter_Type | ‘0014’H, |
| | Parameter_Length | ‘0008’H, |
| | PAD | PAD_2 OR NULL, |
| | numVersions | ?, |
| | indexOpVersion | ?, |
| | Version_1 | ?, |
| | Version_2 | ? } |



Copyright International Organization for Standardization
Provided by IHS under license with ISO
No reproduction or networking permitted without license from IHS
Not for Resale

| ASN.1 Type Constraint Declaration | | | |
|---|---|---|---|
| **Constraint Name** | : SMTSupportedVersions_73 | | |
| **Structured Type** | : SMTSupportedVersions_GENERAL | | |
| **Derivation Path** | : SMTSupportedVersions_Q | | |
| **Comments** | : | | |
| **Constraint Value** | | | |
| REPLACE | PAD | BY | PAD_2, |
| REPLACE | numVersions | BY | ‘02’H, |
| REPLACE | indexOpVersion | BY | ‘02’H, |
| REPLACE | Version_1 | BY | ‘0001’H, |
| REPLACE | Version_2 | BY | ‘0002’H |

| ASN.1 Type Constraint Declaration | | |
|---|---|---|
| **Constraint Name** | : ResourceType_01 | |
| **Structured Type** | : ResourceType_GENERAL | |
| **Derivation Path** | : | |
| **Comments** | : | |
| **Constraint Value** | | |
| { | Parameter_Type | ‘0015’H, |
| | Parameter_Length | ‘0004’H, |
| | Resource_Type | ‘00000001’H } |

| ASN.1 Type Constraint Declaration | | |
|---|---|---|
| **Constraint Name** | : SBACommand_Request | |
| **Structured Type** | : SBACommand_GENERAL | |
| **Derivation Path** | : | |
| **Comments** | : SBA Request Allocation Command | |
| **Constraint Value** | | |
| { | Parameter_Type | ‘0016’H, |
| | Parameter_Length | ‘0004’H, |
| | SbaCommand | ‘00000001’H } |

| ASN.1 Type Constraint Declaration | | | |
|---|---|---|---|
| **Constraint Name** | : SBACommand_Report | | |
| **Structured Type** | : SBACommand_GENERAL | | |
| **Derivation Path** | : SBACommand_Request | | |
| **Comments** | : SBA Report Allocation Command | | |
| **Constraint Value** | | | |
| REPLACE | SbaCommand | BY | ‘00000002’H |


--`,,```,,,,````-`-,,`,,`,`,,`---
Copyright International Organization for Standardization
Provided by IHS under license with ISO
No reproduction or networking permitted without license from IHS
Not for Resale

| ASN.1 Type Constraint Declaration | |
|---|---|
| **Constraint Name** | : SBACommand_Change |
| **Structured Type** | : SBACommand_GENERAL |
| **Derivation Path** | : SBACommand_Request |
| **Comments** | : SBA Change Allocation Command |
| **Constraint Value** | |
| REPLACE SbaCommand BY '00000003'H | |

| ASN.1 Type Constraint Declaration | |
|---|---|
| **Constraint Name** | : SBAPayloadRequest_Q |
| **Structured Type** | : SBAPayloadRequest_GENERAL |
| **Derivation Path** | : |
| **Comments** | : |
| **Constraint Value** | |
| { Parameter_Type | '0017'H, |
| Parameter_Length | '0004'H, |
| SbaRequest | ? } |

| ASN.1 Type Constraint Declaration | |
|---|---|
| **Constraint Name** | : SBAPayloadRequest_00 |
| **Structured Type** | : SBAPayloadRequest_GENERAL |
| **Derivation Path** | : |
| **Comments** | : |
| **Constraint Value** | |
| { Parameter_Type | '0017'H, |
| Parameter_Length | '0004'H, |
| SbaRequest | '00000000'H } |

| ASN.1 Type Constraint Declaration | |
|---|---|
| **Constraint Name** | : SBAOverheadRequest_Q |
| **Structured Type** | : SBAOverheadRequest_GENERAL |
| **Derivation Path** | : |
| **Comments** | : |
| **Constraint Value** | |
| { Parameter_Type | '0018'H, |
| Parameter_Length | '0004'H, |
| SbaOverheadReq | ? } |



Copyright International Organization for Standardization
Provided by IHS under license with ISO
No reproduction or networking permitted without license from IHS
Not for Resale

| ASN.1 Type Constraint Declaration | | |
|---|---|---|
| **Constraint Name** | : | SBAOverheadRequest_00 |
| **Structured Type** | : | SBAOverheadRequest_GENERAL |
| **Derivation Path** | : | |
| **Comments** | : | |

| Constraint Value | | |
|---|---|---|
| { | Parameter_Type | ‘0018’H, |
| | Parameter_Length | ‘0004’H, |
| | SbaOverheadReq | ‘00000000’H } |

| ASN.1 Type Constraint Declaration | | |
|---|---|---|
| **Constraint Name** | : | SBAAllocationAddress_TESTER |
| **Structured Type** | : | SBAAllocationAddress_GENERAL |
| **Derivation Path** | : | |
| **Comments** | : | |

| Constraint Value | | |
|---|---|---|
| { | Parameter_Type | ‘0019’H, |
| | Parameter_Length | ‘0008’H, |
| | PAD | PAD_2, |
| | SbaAllocationAddr | TESTER_ADDRESS } |

| ASN.1 Type Constraint Declaration | | |
|---|---|---|
| **Constraint Name** | : | SBAAllocationAddress_IUT |
| **Structured Type** | : | SBAAllocationAddress_GENERAL |
| **Derivation Path** | : | SBAAllocationAddress_TESTER |
| **Comments** | : | |

| Constraint Value | | | |
|---|---|---|---|
| REPLACE | SbaAllocationAddr | BY | IUT_ADDRESS |

| ASN.1 Type Constraint Declaration | | |
|---|---|---|
| **Constraint Name** | : | SBACatagory_Q |
| **Structured Type** | : | SBACatagory_GENERAL |
| **Derivation Path** | : | |
| **Comments** | : | |

| Constraint Value | | |
|---|---|---|
| { | Parameter_Type | ‘001A’H, |
| | Parameter_Length | ‘0004’H, |
| | Catagory | ? } |


Copyright International Organization for Standardization
Provided by IHS under license with ISO
No reproduction or networking permitted without license from IHS
Not for Resale

| ASN.1 Type Constraint Declaration | | | |
|---|---|---|---|
| **Constraint Name** | : SBACatagory_00 | | |
| **Structured Type** | : SBACatagory_GENERAL | | |
| **Derivation Path** | : SBACatagory_Q | | |
| **Comments** | : Catagory not supported or unknown | | |
| **Constraint Value** | | | |
| REPLACE | Catagory | BY | ‘00000000’H |

| ASN.1 Type Constraint Declaration | | | |
|---|---|---|---|
| **Constraint Name** | : SBACatagory_01 | | |
| **Structured Type** | : SBACatagory_GENERAL | | |
| **Derivation Path** | : SBACatagory_Q | | |
| **Comments** | : Static Allocation | | |
| **Constraint Value** | | | |
| REPLACE | Catagory | BY | ‘00000001’H |

| ASN.1 Type Constraint Declaration | | | |
|---|---|---|---|
| **Constraint Name** | : SBACatagory_02 | | |
| **Structured Type** | : SBACatagory_GENERAL | | |
| **Derivation Path** | : SBACatagory_Q | | |
| **Comments** | : Allocator defined classification for the bandwidth | | |
| **Constraint Value** | | | |
| REPLACE | Catagory | BY | ‘00000002’H..’FFFFFFFF’H |

| ASN.1 Type Constraint Declaration | | |
|---|---|---|
| **Constraint Name** | : MaximumT_Neg_Q | |
| **Structured Type** | : MaximumT_Neg_GENERAL | |
| **Derivation Path** | : | |
| **Comments** | : | |
| **Constraint Value** | | |
| { | Parameter_Type | ‘001B’H, |
| | Parameter_Length | ‘0004’H, |
| | MaxTneg | ? } |



Copyright International Organization for Standardization
Provided by IHS under license with ISO
No reproduction or networking permitted without license from IHS
Not for Resale

| ASN.1 Type Constraint Declaration | |
|---|---|
| **Constraint Name** | : MimimumSBASegment_Q |
| **Structured Type** | : MinimumSBASegment_GENERAL |
| **Derivation Path** | : |
| **Comments** | : |

**Constraint Value**

```
{       Parameter_Type          ‘001C’H,
        Parameter_Length        ‘0004’H,
        MinSegment              ?       }
```

| ASN.1 Type Constraint Declaration | |
|---|---|
| **Constraint Name** | : SBAAllocatable_Q |
| **Structured Type** | : SBAAllocatable_GENERAL |
| **Derivation Path** | : |
| **Comments** | : |

**Constraint Value**

```
{       Parameter_Type          ‘001D’H,
        Parameter_Length        ‘0004’H,
        SbaAllocatable          ?       }
```

| ASN.1 Type Constraint Declaration | |
|---|---|
| **Constraint Name** | : SBAAllocatable_00 |
| **Structured Type** | : SBAAllocatable_GENERAL |
| **Derivation Path** | : |
| **Comments** | : |

**Constraint Value**

```
{       Parameter_Type          ‘001D’H,
        Parameter_Length        ‘0004’H,
        SbaAllocatable          ‘00000000’H     }
```

| ASN.1 Type Constraint Declaration | |
|---|---|
| **Constraint Name** | : Authorization_Q |
| **Structured Type** | : Authorization_GENERAL |
| **Derivation Path** | : |
| **Comments** | : |

**Constraint Value**

```
{       Parameter_Type          ‘0021’H,
        Parameter_Length        ?,
        Authorization           ?       }
```


Copyright International Organization for Standardization
Provided by IHS under license with ISO
No reproduction or networking permitted without license from IHS
Not for Resale

| ASN.1 Type Constraint Declaration | |
|---|---|
| **Constraint Name** | : ESFID_Q |
| **Structured Type** | : ESFID_GENERAL |
| **Derivation Path** | : |
| **Comments** | : |

**Constraint Value**

```
{       Parameter_Type          'FFFF'H,
        Parameter_Length        '0008'H,
        PAD                     PAD_2,
        ESF_ID                  ?       }
```

| ASN.1 Type Constraint Declaration | |
|---|---|
| **Constraint Name** | : DuplAddress_Q |
| **Structured Type** | : DuplAddressType |
| **Derivation Path** | : |
| **Comments** | : |

**Constraint Value**

```
        ?
```

| ASN.1 Type Constraint Declaration | |
|---|---|
| **Constraint Name** | : DuplAddress_00 |
| **Structured Type** | : DuplAddressType |
| **Derivation Path** | : |
| **Comments** | : my duplicate -- fddiMACDA_Flag for this MAC |

**Constraint Value**

```
        '00000001'B,
```

| ASN.1 Type Constraint Declaration | |
|---|---|
| **Constraint Name** | : DuplAddress_01 |
| **Structured Type** | : DuplAddressType |
| **Derivation Path** | : |
| **Comments** | : my UNA duplicate -- fddiMACUNDA_Flag for this MAC |

**Constraint Value**

```
        '00000010'B,
```



--`,,```,,,,````-`-`,,`,,`,`,,`---
Copyright International Organization for Standardization
Provided by IHS under license with ISO
No reproduction or networking permitted without license from IHS
Not for Resale

| ASN.1 Type Constraint Declaration | | | | |
|---|---|---|---|---|
| **Constraint Name** | : ECHOData_MIN | | | |
| **Structured Type** | : ECHOData_GENERAL | | | |
| **Derivation Path** | : ECHOData_MAX | | | |
| **Comments** | : | | | |
| **Constraint Value** | | | | |
| REPLACE | Parameter_Length | BY | ‘0000’H, | |
| REPLACE | echo_data | BY | NULL | -- null data |

| ASN.1 Type Constraint Declaration | | | |
|---|---|---|---|
| **Constraint Name** | : ECHOData_SMTMAX | | |
| **Structured Type** | : ECHOData_GENERAL | | |
| **Derivation Path** | : ECHOData_MAX | | |
| **Comments** | : maximum length of SMT Infofield | | |
| **Constraint Value** | | | |
| REPLACE | Parameter_Length | BY | ‘117E’H, |
| REPLACE | echo_data | BY | ECH_DATA(4458) |

| ASN.1 Type Constraint Declaration | | | |
|---|---|---|---|
| **Constraint Name** | : ECHOData_INVALID | | |
| **Structured Type** | : ECHOData_GENERAL | | |
| **Derivation Path** | : ECHOData_MAX | | |
| **Comments** | : maximum length of SMT Infofield | | |
| **Constraint Value** | | | |
| REPLACE | Parameter_Length | BY | ‘1194’H, |
| REPLACE | echo_data | BY | ECH_DATA(4500) |

| ASN.1 Type Constraint Declaration | | | | |
|---|---|---|---|---|
| **Constraint Name** | : PathLatency_02 | | | |
| **Structured Type** | : PathLatency_GENERAL | | | |
| **Derivation Path** | : | | | |
| **Comments** | : | | | |
| **Constraint Value** | | | | |
| REPLACE | PORTOutIndex | BY | ‘0001’..’FFFF’H, | -- Dual attach |
| REPLACE | PathLatencyRing2 | BY | ‘0001’..’FFFF’H | -- Dual attach |


Copyright International Organization for Standardization
Provided by IHS under license with ISO
No reproduction or networking permitted without license from IHS
Not for Resale

| ASN.1 Type Constraint Declaration | | | |
|---|---|---|---|
| **Constraint Name** | : ReasonCode_01 | | |
| **Structured Type** | : ReasonCode_GENERAL | | |
| **Derivation Path** | : ReasonCode_Q | | |
| **Comments** | : frame class not supported | | |
| **Constraint Value** | | | |
| REPLACE | reason | BY | ‘00000001’H |

| ASN.1 Type Constraint Declaration | | | |
|---|---|---|---|
| **Constraint Name** | : ReasonCode_02 | | |
| **Structured Type** | : ReasonCode_GENERAL | | |
| **Derivation Path** | : ReasonCode_Q | | |
| **Comments** | : frame version not supported | | |
| **Constraint Value** | | | |
| REPLACE | reason | BY | ‘00000002’H |

| ASN.1 Type Constraint Declaration | | | |
|---|---|---|---|
| **Constraint Name** | : ReasonCode_03 | | |
| **Structured Type** | : ReasonCode_GENERAL | | |
| **Derivation Path** | : ReasonCode_Q | | |
| **Comments** | : success | | |
| **Constraint Value** | | | |
| REPLACE | reason | BY | ‘00000003’H |

| ASN.1 Type Constraint Declaration | | | |
|---|---|---|---|
| **Constraint Name** | : ReasonCode_04 | | |
| **Structured Type** | : ReasonCode_GENERAL | | |
| **Derivation Path** | : ReasonCode_Q | | |
| **Comments** | : bad set count | | |
| **Constraint Value** | | | |
| REPLACE | reason | BY | ‘00000004’H |



Copyright International Organization for Standardization
Provided by IHS under license with ISO
No reproduction or networking permitted without license from IHS
Not for Resale

| ASN.1 Type Constraint Declaration | | | |
|---|---|---|---|
| **Constraint Name** : ReasonCode_05<br>**Structured Type** : ReasonCode_GENERAL<br>**Derivation Path** : ReasonCode_Q<br>**Comments** : illegal operation | | | |
| **Constraint Value** | | | |
| REPLACE | reason | BY | ‘00000005’H |

| ASN.1 Type Constraint Declaration | | | |
|---|---|---|---|
| **Constraint Name** : ReasonCode_06<br>**Structured Type** : ReasonCode_GENERAL<br>**Derivation Path** : ReasonCode_Q<br>**Comments** : no parameter | | | |
| **Constraint Value** | | | |
| REPLACE | reason | BY | ‘00000006’H |

| ASN.1 Type Constraint Declaration | | | |
|---|---|---|---|
| **Constraint Name** : ReasonCode_08<br>**Structured Type** : ReasonCode_GENERAL<br>**Derivation Path** : ReasonCode_Q<br>**Comments** : out of range | | | |
| **Constraint Value** | | | |
| REPLACE | reason | BY | ‘00000008’H |

| ASN.1 Type Constraint Declaration | | | |
|---|---|---|---|
| **Constraint Name** : ReasonCode_09<br>**Structured Type** : ReasonCode_GENERAL<br>**Derivation Path** : ReasonCode_Q<br>**Comments** : not authorized | | | |
| **Constraint Value** | | | |
| REPLACE | reason | BY | ‘00000009’H |

| ASN.1 Type Constraint Declaration | | | |
|---|---|---|---|
| **Constraint Name** : ReasonCode_0A<br>**Structured Type** : ReasonCode_GENERAL<br>**Derivation Path** : ReasonCode_Q<br>**Comments** : length error | | | |
| **Constraint Value** | | | |
| REPLACE | reason | BY | ‘0000000A’H |


Copyright International Organization for Standardization
Provided by IHS under license with ISO
No reproduction or networking permitted without license from IHS
Not for Resale

| ASN.1 Type Constraint Declaration | | | |
|---|---|---|---|
| **Constraint Name** | : ReasonCode_0B | | |
| **Structured Type** | : ReasonCode_GENERAL | | |
| **Derivation Path** | : ReasonCode_Q | | |
| **Comments** | : frame too long | | |
| **Constraint Value** | | | |
| REPLACE | reason | BY | ‘0000000B’H |

| ASN.1 Type Constraint Declaration | | | |
|---|---|---|---|
| **Constraint Name** | : ReasonCode_0D | | |
| **Structured Type** | : ReasonCode_GENERAL | | |
| **Derivation Path** | : ReasonCode_Q | | |
| **Comments** | : sba denied | | |
| **Constraint Value** | | | |
| REPLACE | reason | BY | ‘0000000D’H |

| ASN.1 Type Constraint Declaration | | | |
|---|---|---|---|
| **Constraint Name** | : StationDescriptor_01 | | |
| **Structured Type** | : StationDescriptor_GENERAL | | |
| **Derivation Path** | : StationDescriptor_Q | | |
| **Comments** | : tester description for a single MAC DAS FDDI Station | | |
| **Constraint Value** | | | |
| REPLACE | NodeClass | BY | ‘00’H, |
| REPLACE | Macct | BY | ‘01’H, |
| REPLACE | NonMaster_Ct | BY | ’02’H, |
| REPLACE | Master_Ct | BY | ‘00’H |

| ASN.1 Type Constraint Declaration | | | |
|---|---|---|---|
| **Constraint Name** | : StationState_01 | | |
| **Structured Type** | : StationState_GENERAL | | |
| **Derivation Path** | : StationState_Q | | |
| **Comments** | : Normal FDDI Asynchronous operation | | |
| **Constraint Value** | | | |
| REPLACE | Topology | BY | TopologyType_01, |
| REPLACE | DupAddress | BY | DuplAddress_Q |



Copyright International Organization for Standardization
Provided by IHS under license with ISO
No reproduction or networking permitted without license from IHS
Not for Resale

| ASN.1 Type Constraint Declaration | |
|---|---|
| **Constraint Name** | : Topology_Q |
| **Structured Type** | : TopologyType |
| **Derivation Path** | : |
| **Comments** | : |
| **Constraint Value** | |
| ? | |

| ASN.1 Type Constraint Declaration | |
|---|---|
| **Constraint Name** | : Topology_01 |
| **Structured Type** | : TopologyType |
| **Derivation Path** | : |
| **Comments** | : Normal FDDI Asynchronous operation with SRF enabled by default |
| **Constraint Value** | |
| ‘00100000’B, | |

| ASN.1 Type Constraint Declaration | |
|---|---|
| **Constraint Name** | : Topology_02 |
| **Structured Type** | : TopologyType |
| **Derivation Path** | : |
| **Comments** | : Synchronous service and SRF enabled. |
| **Constraint Value** | |
| ‘01100000’B, | |

| ASN.1 Type Constraint Declaration | |
|---|---|
| **Constraint Name** | : SbaPayloadType_Q |
| **Structured Type** | : SbaPayloadType |
| **Derivation Path** | : |
| **Comments** | : |
| **Constraint Value** | |
| ? | |


--`,,```,,,,````-`-`,,`,,`,`,,`---
Copyright International Organization for Standardization
Provided by IHS under license with ISO
No reproduction or networking permitted without license from IHS
Not for Resale

| ASN.1 Type Constraint Declaration | | | |
|---|---|---|---|
| **Constraint Name** | : SbaAvailableType_Q | | |
| **Structured Type** | : SbaAvailableType | | |
| **Derivation Path** | : | | |
| **Comments** | : | | |
| **Constraint Value** | | | |
| { | sbaavailable | 0..12500 | } |

| ASN.1 Type Constraint Declaration | | | |
|---|---|---|---|
| **Constraint Name** | : SMTSupportedVersions_62 | | |
| **Structured Type** | : SMTSupportedVersions_GENERAL | | |
| **Derivation Path** | : | | |
| **Comments** | : Check if version 62 has this format!! | | |
| **Constraint Value** | | | |
| REPLACE | numVersions | BY | ‘01’H, |
| REPLACE | indexOpVersion | BY | ‘01’H, |
| OMIT | Version_2 | | |

| ASN.1 Type Constraint Declaration | | | |
|---|---|---|---|
| **Constraint Name** | : SMTSupportedVersions_XX | | |
| **Structured Type** | : SMTSupportedVersions_GENERAL | | |
| **Derivation Path** | : SMTSupportedVersion_73 | | |
| **Comments** | : | | |
| **Constraint Value** | | | |
| REPLACE | Parameter_Length | BY | ?, |
| REPLACE | PAD | BY | PAD_2, |
| REPLACE | numVersions | BY | ‘01’H..’FF’H, |
| REPLACE | indexOpVersion | BY | ‘01’H..’FF’H |
| REPLACE | Version_1 | BY | ‘0000’H..’FFFF’H, |
| REPLACE | Version_n | BY | ‘0000’H..’FFFF’H, |
| REPLACE | PAD | BY | ? |

| ASN.1 Type Constraint Declaration | | | |
|---|---|---|---|
| **Constraint Name** | : UNA_IUT | | |
| **Structure Type** | : UNA_GENERAL | | |
| **Derivation Path** | : UNA_UNKNOWN | | |
| **Comments** | : | | |
| **Constraint Value** | | | |
| REPLACE | una | BY | IUT_ADDRESS |



Copyright International Organization for Standardization
Provided by IHS under license with ISO
No reproduction or networking permitted without license from IHS
Not for Resale

| ASN.1 Type Constraint Declaration | | | |
|---|---|---|---|
| **Constraint Name** : UNA_TESTER<br>**Structure Type** : UNA_GENERAL<br>**Derivation Path** : UNA_UNKNOWN<br>**Comments** : | | | |
| **Constraint Value** | | | |
| REPLACE | una | BY | TESTER_ADDRESS |

| ASN.1 Type Constraint Declaration | | | |
|---|---|---|---|
| **Constraint Name** : UNA_TESTER2<br>**Structure Type** : UNA_GENERAL<br>**Derivation Path** : UNA_UNKNOWN<br>**Comments** : | | | |
| **Constraint Value** | | | |
| REPLACE | una | BY | TESTER_ADDRESS2 |

### 9.3.1.1 ASN.1 Type Constraint for SMT Attributes

#### 9.3.1.1.1 SMT Station ID Group Attributes Constraints

| ASN.1 Type Constraint Declaration | | | |
|---|---|---|---|
| **Constraint Name** : SMTStationId_Grp_00<br>**Structured Type** : SMTStationId_Group<br>**Comments** : | | | |
| **Constraint Value** | | | |
| { | stationid | SMTStationId_01, | |
| | opversionid | SMTOpVersionId_01, | |
| | hiversionid | SMTHiVersionId_01, | |
| | loversionid | SMTLoVersionId_01, | |
| | manufacturerdata | SMTManufacturerData_01, | -- optional |
| | userdata | SMTUserData_01, | |
| | mibversionid | SMTMIBVersionId_01 } | |

| ASN.1 Type Constraint Declaration | | | |
|---|---|---|---|
| **Constraint Name** : SMTStationIdGrp_PmfReq<br>**Structured Type** : GroupAttribute<br>**Comments** : | | | |
| **Constraint Value** | | | |
| { | ParameterType | ‘100A’H, | |
| | Parameter_Length | ‘0000’H } | |


Copyright International Organization for Standardization
Provided by IHS under license with ISO
No reproduction or networking permitted without license from IHS
Not for Resale

| ASN.1 Type Constraint Declaration | | |
|---|---|---|
| **Constraint Name** | **:** | SMTStationId_01 |
| **Structured Type** | **:** | SMTStationId |
| **Derivation Path** | **:** | |
| **Comments** | **:** | |

| Constraint Value | | |
|---|---|---|
| { | Parameter_Type | ‘100A’H, |
| | Parameter_Length | ‘0008’H, |
| | stationidtype | SMTStationIdentifierType_Q } |

| ASN.1 Type Constraint Declaration | | |
|---|---|---|
| **Constraint Name** | **:** | SMTStationId_PmfReq |
| **Structured Type** | **:** | SMTStationId |
| **Derivation Path** | **:** | SMTStationId_01 |
| **Comments** | **:** | |

| Constraint Value | | | |
|---|---|---|---|
| REPLACE | Parameter_Length | BY | ‘0000’H, |
| OMIT | stationidtype | | |

| ASN.1 Type Constraint Declaration | | |
|---|---|---|
| **Constraint Name** | **:** | SMTOpVersionId_01 |
| **Structured Type** | **:** | SMTOpVersionId |
| **Derivation Path** | **:** | |
| **Comments** | **:** | |

| Constraint Value | | |
|---|---|---|
| { | Parameter_Type | ‘100D’H, |
| | Parameter_Length | ‘0008’H, |
| | PAD | PAD_2, |
| | opversionidtype | ‘0002’H } |

| ASN.1 Type Constraint Declaration | | |
|---|---|---|
| **Constraint Name** | **:** | SMTOpVersionId_PmfReq |
| **Structured Type** | **:** | SMTOpVersionId |
| **Derivation Path** | **:** | SMTOpVersionId_01 |
| **Comments** | **:** | |

| Constraint Value | | | |
|---|---|---|---|
| REPLACE | Parameter_Length | BY | ‘0000’H, |
| OMIT | PAD, | | |
| OMIT | opversionidtype | | |

--`,,```,,,,````-`-`,,`,,`,`,,`---



Copyright International Organization for Standardization
Provided by IHS under license with ISO
No reproduction or networking permitted without license from IHS
Not for Resale

| ASN.1 Type Constraint Declaration | | |
|---|---|---|
| **Constraint Name** | **:** | SMTHiVersionId_01 |
| **Structured Type** | **:** | SMTHiVersionId |
| **Derivation Path** | **:** | |
| **Comments** | **:** | |

| Constraint Value | | |
|---|---|---|
| { | Parameter_Type | ‘100D’H, |
| | Parameter_Length | ‘0008’H, |
| | PAD | PAD_2, |
| | hiversionidtype | ‘0002’H } |

| ASN.1 Type Constraint Declaration | | |
|---|---|---|
| **Constraint Name** | **:** | SMTHiVersionId_PmfReq |
| **Structured Type** | **:** | SMTHiVersionId |
| **Derivation Path** | **:** | SMTHiVersionId_01 |
| **Comments** | **:** | |

| Constraint Value | | | |
|---|---|---|---|
| REPLACE | Parameter_Length | BY | ‘0000’H, |
| OMIT | PAD, | | |
| OMIT | hiversionidtype | | |

| ASN.1 Type Constraint Declaration | | |
|---|---|---|
| **Constraint Name** | **:** | SMTLoVersionId_01 |
| **Structured Type** | **:** | SMTLoVersionId |
| **Derivation Path** | **:** | |
| **Comments** | **:** | |

| Constraint Value | | |
|---|---|---|
| { | Parameter_Type | ‘100D’H, |
| | Parameter_Length | ‘0008’H, |
| | PAD | PAD_2, |
| | loversionidtype | ‘0001’H } |

| ASN.1 Type Constraint Declaration | | |
|---|---|---|
| **Constraint Name** | **:** | SMTLoVersionId_PmfReq |
| **Structured Type** | **:** | SMTLoVersionId |
| **Derivation Path** | **:** | SMTLoVersionId_01 |
| **Comments** | **:** | |

| Constraint Value | | | |
|---|---|---|---|
| REPLACE | Parameter_Length | BY | ‘0000’H, |
| OMIT | PAD, | | |
| OMIT | loversionidtype | | |


Copyright International Organization for Standardization
Provided by IHS under license with ISO
No reproduction or networking permitted without license from IHS
Not for Resale

| ASN.1 Type Constraint Declaration | | |
|---|---|---|
| **Constraint Name** | : | SMTManufacturerData_01 |
| **Structured Type** | : | SMTManufacturerData |
| **Derivation Path** | : | |
| **Comments** | : | |

| Constraint Value | | |
|---|---|---|
| { | Parameter_Type | ‘1010’H, |
| | Parameter_Length | ‘0032’H, |
| | manufacturerdatatype | SMTManufacturerDataType_Q } |

| ASN.1 Type Constraint Declaration | | |
|---|---|---|
| **Constraint Name** | : | SMTManufacturerData_PmfReq |
| **Structured Type** | : | SMTManufacturerData |
| **Derivation Path** | : | SMTManufacturerData_01 |
| **Comments** | : | |

| Constraint Value | | | |
|---|---|---|---|
| REPLACE | Parameter_Length | BY | ‘0000’H, |
| OMIT | manufacturerdatatype | | |

| ASN.1 Type Constraint Declaration | | |
|---|---|---|
| **Constraint Name** | : | SMTMIBVersionId_Q |
| **Structured Type** | : | SMTMIBVersionId |
| **Derivation Path** | : | |
| **Comments** | : | |

| Constraint Value | | |
|---|---|---|
| { | Parameter_Type | ‘100D’H, |
| | Parameter_Length | ‘0008’H, |
| | PAD | PAD_2, |
| | mibversionidtype | ‘0002’H } |

| ASN.1 Type Constraint Declaration | | |
|---|---|---|
| **Constraint Name** | : | SMTMIBVersionId_PmfReq |
| **Structured Type** | : | SMTMIBVersionId |
| **Derivation Path** | : | SMTMIBVersionId_Q |
| **Comments** | : | |

| Constraint Value | | | |
|---|---|---|---|
| REPLACE | Parameter_Length | BY | ‘0000’H, |
| OMIT | PAD, | | |
| OMIT | mibversionidtype | | |



Copyright International Organization for Standardization
Provided by IHS under license with ISO
No reproduction or networking permitted without license from IHS
Not for Resale

#### 9.3.1.1.2 SMT Station Configuration Group Attributes Constraints

| ASN.1 Type Constraint Declaration | | |
|---|---|---|
| **Constraint Name** : SMTStationConfig_Grp_00<br>**Structured Type** : SMTStationConfig_Group<br>**Comments** : | | |
| **Constraint Value** | | |
| { | macct | SMTMac_Ct_01, |
| | nonmasterct | SMTNonMaster_Ct_01, |
| | masterct | SMTMaster_Ct_01, |
| | availablepaths | SMTAvailablePaths_01, |
| | configcapabilities | SMTConfigCapabilities_01, |
| | configpolicy | SMTConfigPolicy_01, |
| | connectionpolicy | SMTConnectionPolicy_01, |
| | tnotify | SMTT_Notify_01, |
| | statrptpolicy | SMTStatRptPolicy_01, |
| | tracemacexpiration | SMTTrace_MaxExpiration_01, |
| | portindexes | SMTPORTIndexes_01, |
| | macindexes | SMTMACIndexes_01, |
| | bypasspresent | SMTBypassPresent_01 } |

| ASN.1 Type Constraint Declaration | | |
|---|---|---|
| **Constraint Name** : SMTStationConfigGrp_PmfReq<br>**Structured Type** : GroupAttribute<br>**Comments** : | | |
| **Constraint Value** | | |
| { | ParameterType | ‘10014’H, |
| | Parameter_Length | ‘0000’H } |

| ASN.1 Type Constraint Declaration | | |
|---|---|---|
| **Constraint Name** : SMTMac_Ct_01<br>**Structured Type** : SMTMac_Ct<br>**Derivation Path** :<br>**Comments** : | | |
| **Constraint Value** | | |
| { | Parameter_Type | ‘1015’H, |
| | Parameter_Length | ‘0004’H, |
| | PAD | PAD_2, |
| | maccttype | ? } |


Copyright International Organization for Standardization
Provided by IHS under license with ISO
No reproduction or networking permitted without license from IHS Not for Resale

| ASN.1 Type Constraint Declaration | | | |
|---|---|---|---|
| **Constraint Name** : SMTMac_Ct_PmfReq<br>**Structured Type** : SMTMac_Ct<br>**Derivation Path** : SMTMac_Ct_01<br>**Comments** : | | | |
| **Constraint Value** | | | |
| REPLACE<br>OMIT<br>OMIT | Parameter_Length<br>PAD,<br>maccttype | BY | ‘0000’H, |

| ASN.1 Type Constraint Declaration | | |
|---|---|---|
| **Constraint Name** : SMTNonMaster_Ct_01<br>**Structured Type** : SMTNonMaster_Ct<br>**Derivation Path** :<br>**Comments** : | | |
| **Constraint Value** | | |
| { | Parameter_Type<br>Parameter_Length<br>PAD<br>nonmastercttype | ‘1016’H,<br>‘0004’H,<br>PAD_2,<br>? } |

| ASN.1 Type Constraint Declaration | | | |
|---|---|---|---|
| **Constraint Name** : SMTNonMaster_Ct_PmfReq<br>**Structured Type** : SMTNonMaster_Ct<br>**Derivation Path** : SMTNonMaster_Ct_01<br>**Comments** : | | | |
| **Constraint Value** | | | |
| REPLACE<br>OMIT<br>OMIT | Parameter_Length<br>PAD,<br>nonmastercttype | BY | ‘0000’H, |

| ASN.1 Type Constraint Declaration | | |
|---|---|---|
| **Constraint Name** : SMTMaster_Ct_01<br>**Structured Type** : SMTMaster_Ct<br>**Derivation Path** :<br>**Comments** : | | |
| **Constraint Value** | | |
| { | Parameter_Type<br>Parameter_Length<br>PAD<br>mastercttype | ‘1017’H,<br>‘0004’H,<br>PAD_2,<br>? } |



Copyright International Organization for Standardization
Provided by IHS under license with ISO
No reproduction or networking permitted without license from IHS
Not for Resale

| ASN.1 Type Constraint Declaration | | | |
|---|---|---|---|
| **Constraint Name** : SMTMaster_Ct_PmfReq<br>**Structured Type** : SMTMaster_Ct<br>**Derivation Path** : SMTMaster_Ct_01<br>**Comments** : | | | |
| **Constraint Value** | | | |
| REPLACE<br>OMIT<br>OMIT | Parameter_Length<br>PAD,<br>mastercttype | BY | ‘0000’H, |

| ASN.1 Type Constraint Declaration | | | | | |
|---|---|---|---|---|---|
| **Constraint Name** : SMTAvailablePaths_01<br>**Structured Type** : SMTAvailablePaths<br>**Derivation Path** :<br>**Comments** : | | | | | |
| **Constraint Value** | | | | | |
| { | Parameter_Type<br>Parameter_Length<br>{ PAD<br>availablepathstype | ‘1018’H,<br>‘0004’H,<br>PAD_1,<br>CMNAvailablePathsType_Q | } | } | |

| ASN.1 Type Constraint Declaration | | | |
|---|---|---|---|
| **Constraint Name** : SMTAvailablePaths_PmfReq<br>**Structured Type** : SMTAvailablePaths<br>**Derivation Path** : SMTAvailablePaths_01<br>**Comments** : | | | |
| **Constraint Value** | | | |
| REPLACE<br>REPLACE<br>REPLACE | Parameter_Length<br>PAD,<br>availablepathstype | BY | ‘0000’H, |

| ASN.1 Type Constraint Declaration | | |
|---|---|---|
| **Constraint Name** : SMTConfigCapabilities_01<br>**Structured Type** : SMTConfigCapabilities<br>**Derivation Path** :<br>**Comments** : | | |
| **Constraint Value** | | |
| { | Parameter_Type<br>Parameter_Length<br>PAD<br>capabilitiestype | ‘1019’H,<br>‘0004’H,<br>PAD_2,<br>SMTCapabilitiesType_Q} |


Copyright International Organization for Standardization
Provided by IHS under license with ISO
No reproduction or networking permitted without license from IHS
Not for Resale

| ASN.1 Type Constraint Declaration | | | |
|---|---|---|---|
| **Constraint Name** | **:** SMTConfigCapabilities_PmfReq | | |
| **Structured Type** | **:** SMTConfigCapabilities | | |
| **Derivation Path** | **:** SMTConfigCapabilities_01 | | |
| **Comments** | **:** | | |
| **Constraint Value** | | | |
| REPLACE | Parameter_Length | BY | ‘0000’H, |
| OMIT | PAD, | | |
| OMIT | capabilitiestype | | |

| ASN.1 Type Constraint Declaration | | |
|---|---|---|
| **Constraint Name** | **:** SMTConfigPolicy_01 | |
| **Structured Type** | **:** SMTConfigPolicy | |
| **Derivation Path** | **:** | |
| **Comments** | **:** | |
| **Constraint Value** | | |
| { | Parameter_Type | ‘100A’H, |
| | Parameter_Length | ‘0008’H, |
| | PAD | PAD_2, |
| | configpolicytype | SMTConfigPolicyType_Q } |

| ASN.1 Type Constraint Declaration | | | |
|---|---|---|---|
| **Constraint Name** | **:** SMTConfigPolicy_PmfReq | | |
| **Structured Type** | **:** SMTConfigPolicy | | |
| **Derivation Path** | **:** SMTConfigPolicy_01 | | |
| **Comments** | **:** | | |
| **Constraint Value** | | | |
| REPLACE | Parameter_Length | BY | ‘0000’H, |
| OMIT | PAD, | | |
| OMIT | configpolicytype | | |

--`,,```,,,,````-`-`,,`,,`,`,,`---



Copyright International Organization for Standardization
Provided by IHS under license with ISO
No reproduction or networking permitted without license from IHS
Not for Resale

| ASN.1 Type Constraint Declaration | | |
|---|---|---|
| **Constraint Name** | **:** | SMTConnectionPolicy_01 |
| **Structured Type** | **:** | SMTConnectionPolicy |
| **Derivation Path** | **:** | |
| **Comments** | **:** | |

| Constraint Value | | |
|---|---|---|
| { | Parameter_Type | ‘100B’H, |
| | Parameter_Length | ‘0004’H, |
| | PAD | PAD_2, |
| | connectionpolicytype | ConnectionPolicyType_Q } |

| ASN.1 Type Constraint Declaration | | |
|---|---|---|
| **Constraint Name** | **:** | SMTConnectionPolicy_PmfReq |
| **Structured Type** | **:** | SMTConnectionPolicy |
| **Derivation Path** | **:** | SMTConnectionPolicy_01 |
| **Comments** | **:** | |

| Constraint Value | | | |
|---|---|---|---|
| REPPACE | Parameter_Length | BY | ‘0000’H, |
| OMIT | PAD, | | |
| OMIT | connectionpolicytype | | |

| ASN.1 Type Constraint Declaration | | |
|---|---|---|
| **Constraint Name** | **:** | SMTT_Notify_01 |
| **Structured Type** | **:** | SMTT_Notify |
| **Derivation Path** | **:** | |
| **Comments** | **:** | |

| Constraint Value | | |
|---|---|---|
| { | Parameter_Type | ‘101D’H, |
| | Parameter_Length | ‘0004’H, |
| | PAD | PAD_2, |
| | tnotifytype | SMTT_NotifyType_Q } |

| ASN.1 Type Constraint Declaration | | |
|---|---|---|
| **Constraint Name** | **:** | SMTT_Notify_PmfReq |
| **Structured Type** | **:** | SMTT_Notify |
| **Derivation Path** | **:** | SMTT_Notify_01 |
| **Comments** | **:** | |

| Constraint Value | | | |
|---|---|---|---|
| REPLACE | Parameter_Length | BY | ‘0000’H, |
| OMIT | PAD, | | |
| OMIT | tnotifytype | | |


Copyright International Organization for Standardization
Provided by IHS under license with ISO
No reproduction or networking permitted without license from IHS
Not for Resale

| ASN.1 Type Constraint Declaration | | |
|---|---|---|
| **Constraint Name** | **:** | SMTStatRptPolicy_01 |
| **Structured Type** | **:** | SMTStatRptPolicy |
| **Derivation Path** | **:** | |
| **Comments** | **:** | |

| Constraint Value | | |
|---|---|---|
| { | Parameter_Type | ‘101E’H, |
| | Parameter_Length | ‘0004’H, |
| | PAD | PAD_1, |
| | statrptpolicy | TRUE } |

| ASN.1 Type Constraint Declaration | | |
|---|---|---|
| **Constraint Name** | **:** | SMTStatRptPolicy_PmfReq |
| **Structured Type** | **:** | SMTStatRptPolicy |
| **Derivation Path** | **:** | SMTStatRptPolicy_01 |
| **Comments** | **:** | |

| Constraint Value | | | |
|---|---|---|---|
| REPLACE | Parameter_Length | BY | ‘0000’H, |
| OMIT | PAD, | | |
| OMIT | statrptpolicytype | | |

| ASN.1 Type Constraint Declaration | | |
|---|---|---|
| **Constraint Name** | **:** | SMTTrace_MaxExpiration_01 |
| **Structured Type** | **:** | SMTTrace_MaxExpiration |
| **Derivation Path** | **:** | |
| **Comments** | **:** | |

| Constraint Value | | |
|---|---|---|
| { | Parameter_Type | ‘101F’H, |
| | Parameter_Length | ‘0004’H, |
| | tracemaxexpirationtype | CMNTime_Q } |

| ASN.1 Type Constraint Declaration | | |
|---|---|---|
| **Constraint Name** | **:** | SMTTrace_MaxExpiration_PmfReq |
| **Structured Type** | **:** | SMTTrace_MaxExpiration |
| **Derivation Path** | **:** | SMTTrace_MaxExpiration_01 |
| **Comments** | **:** | |

| Constraint Value | | | |
|---|---|---|---|
| REPLACE | Parameter_Length | BY | ‘0000’H, |
| OMIT | tracemaxexpirationtype | | |



--`,,```,,,,````-`-`,,`,,`,`,,`---
Copyright International Organization for Standardization
Provided by IHS under license with ISO
No reproduction or networking permitted without license from IHS
Not for Resale

| ASN.1 Type Constraint Declaration | | |
|---|---|---|
| **Constraint Name** | : | SMTPORTIndexes_01 |
| **Structured Type** | : | SMTPORTIndexes |
| **Derivation Path** | : | |
| **Comments** | : | |

| Constraint Value | | |
|---|---|---|
| { | Parameter_Type | ‘1020’H, |
| | Parameter_Length | ?, |
| | PAD | PAD_2 or NULL, |
| | portindexestype | SET OF CMNResourceId_Q } |

| ASN.1 Type Constraint Declaration | | |
|---|---|---|
| **Constraint Name** | : | SMTPORTIndexes_PmfReq |
| **Structured Type** | : | SMTPORTIndexes |
| **Derivation Path** | : | SMTPORTIndexes_01 |
| **Comments** | : | |

| Constraint Value | | | |
|---|---|---|---|
| REPLACE | Parameter_Length | BY | ‘0000’H, |
| OMIT | PAD, | | |
| OMIT | portndexestype | | |

| ASN.1 Type Constraint Declaration | | |
|---|---|---|
| **Constraint Name** | : | SMTMACIndexes_01 |
| **Structured Type** | : | SMTMACIndexes |
| **Derivation Path** | : | |
| **Comments** | : | |

| Constraint Value | | |
|---|---|---|
| { | Parameter_Type | ‘1021’H, |
| | Parameter_Length | ‘0004’H, |
| | PAD | PAD_1, |
| | macindexestype | SET OF CMNResourceId_Q } |

| ASN.1 Type Constraint Declaration | | |
|---|---|---|
| **Constraint Name** | : | SMTMACIndexes_PmfReq |
| **Structured Type** | : | SMTMACIndexes |
| **Derivation Path** | : | SMTMACIndexes_01 |
| **Comments** | : | |

| Constraint Value | | | |
|---|---|---|---|
| REPLACE | Parameter_Length | BY | ‘0000’H, |
| OMIT | PAD, | | |
| OMIT | macindexestype | | |


Copyright International Organization for Standardization
Provided by IHS under license with ISO
No reproduction or networking permitted without license from IHS
Not for Resale

| ASN.1 Type Constraint Declaration | | |
|---|---|---|
| **Constraint Name** | : | SMTBypassPresent_01 |
| **Structured Type** | : | SMTBypassPresent |
| **Derivation Path** | : | |
| **Comments** | : | IUT has a bypass switch |

| Constraint Value | | |
|---|---|---|
| { | Parameter_Type | ‘1022’H, |
| | Parameter_Length | ‘0004’H, |
| | PAD | PAD_1, |
| | bypassresenttype | TRUE } |

| ASN.1 Type Constraint Declaration | | |
|---|---|---|
| **Constraint Name** | : | SMTBypassPresent_PmfReq |
| **Structured Type** | : | SMTBypassPresent |
| **Derivation Path** | : | SMTBypassPresent_01 |
| **Comments** | : | IUT has a bypass switch |

| Constraint Value | | | |
|---|---|---|---|
| REPLACE | Parameter_Length | BY | ‘0000’H, |
| OMIT | PAD, | | |
| OMIT | bypasspresent | | |

### 9.3.1.1.3 SMT Status Group Attribute Constraints

| ASN.1 Type Constraint Declaration | | |
|---|---|---|
| **Constraint Name** | : | SMTStatus_Grp_00 |
| **Structured Type** | : | SMTStatus_Group |
| **Comments** | : | |

| Constraint Value | | | |
|---|---|---|---|
| { | ecmstate | SMTECMState_01, | |
| | cfstate | SMTCF_State_01, | |
| | holdstate | SMTHoldState_01, | -- optional |
| | remotedisconnectflag | SMTRemoteDisconnectFlag_01, | |
| | stationstatus | SMTStationStatus_01, | |
| | peerwrapflag | SMTPeerWrapFlag_01 } | |

| ASN.1 Type Constraint Declaration | | |
|---|---|---|
| **Constraint Name** | : | SMTStatusGrp_PmfReq |
| **Structured Type** | : | GroupAttribute |
| **Comments** | : | |

| Constraint Value | | |
|---|---|---|
| { | ParameterType | ‘10028’H, |
| | Parameter_Length | ‘0000’H } |



Copyright International Organization for Standardization
Provided by IHS under license with ISO
No reproduction or networking permitted without license from IHS
Not for Resale

| ASN.1 Type Constraint Declaration | | |
|---|---|---|
| **Constraint Name** | : | SMTECMState_01 |
| **Structured Type** | : | SMTECMState |
| **Derivation Path** | : | |
| **Comments** | : | |

| Constraint Value | | |
|---|---|---|
| { | Parameter_Type | ‘1029’H, |
| | Parameter_Length | ‘0004’H, |
| | PAD | PAD_2, |
| | ecmstatetype | SMTECMStateType_Q } |

| ASN.1 Type Constraint Declaration | | |
|---|---|---|
| **Constraint Name** | : | SMTCF_State_01 |
| **Structured Type** | : | SMTCF_State |
| **Derivation Path** | : | |
| **Comments** | : | |

| Constraint Value | | |
|---|---|---|
| { | Parameter_Type | ‘102A’H, |
| | Parameter_Length | ‘0004’H, |
| | PAD | PAD_2, |
| | cfstatetype | SMTCF_StateType_Q } |

| ASN.1 Type Constraint Declaration | | |
|---|---|---|
| **Constraint Name** | : | SMTHoldState_01 |
| **Structured Type** | : | SMTHoldState |
| **Derivation Path** | : | |
| **Comments** | : | |

| Constraint Value | | |
|---|---|---|
| { | Parameter_Type | ‘102B’H, |
| | Parameter_Length | ‘0004’H, |
| | PAD | PAD_2, |
| | holdstatetype | SMTHoldStateType_Q } |


Copyright International Organization for Standardization
Provided by IHS under license with ISO
No reproduction or networking permitted without license from IHS
Not for Resale

| ASN.1 Type Constraint Declaration | | |
|---|---|---|
| **Constraint Name** | : | SMTRemoteDisconnectFlag_01 |
| **Structured Type** | : | SMTRemoteDisconnectFlag |
| **Derivation Path** | : | |
| **Comments** | : | |

| Constraint Value | | |
|---|---|---|
| { | Parameter_Type | ‘102C’H, |
| | Parameter_Length | ‘0004’H, |
| | PAD | PAD_1, |
| | remotedisconnectflagtype | FALSE } |

| ASN.1 Type Constraint Declaration | | |
|---|---|---|
| **Constraint Name** | : | SMTStationStatus_01 |
| **Structured Type** | : | SMTStationStatus |
| **Derivation Path** | : | |
| **Comments** | : | |

| Constraint Value | | |
|---|---|---|
| { | Parameter_Type | ‘102D’H, |
| | Parameter_Length | ‘0004’H, |
| | PAD | PAD_2, |
| | stationstatustype | SMTStatus_Q } |

| ASN.1 Type Constraint Declaration | | |
|---|---|---|
| **Constraint Name** | : | SMTPeerWrapFlag_01 |
| **Structured Type** | : | SMTPeerWrapFlag |
| **Derivation Path** | : | |
| **Comments** | : | |

| Constraint Value | | |
|---|---|---|
| { | Parameter_Type | ‘102E’H, |
| | Parameter_Length | ‘0004’H, |
| | PAD | PAD_1, |
| | peerwrapflagtype | FALSE } |



Copyright International Organization for Standardization
Provided by IHS under license with ISO
No reproduction or networking permitted without license from IHS
Not for Resale

#### 9.3.1.1.4 SMT MIB Operation Group Attributes Constraints

| ASN.1 Type Constraint Declaration | | | |
|---|---|---|---|
| **Constraint Name** : SMTMIBOperation_Grp_00<br>**Structured Type** : SMTMIBOperation_Group<br>**Comments** : | | | |
| **Constraint Value** | | | |
| { | timestamp | SMTTimeStamp_01, | |
| | transitiontimestamp | SMTTransitionTimeStamp_01, | |
| | setcount | SMTSetCount_01, | -- optional |
| | lastsetstationid | SMTLastSetStationId_01 | -- optional } |

| ASN.1 Type Constraint Declaration | | | |
|---|---|---|---|
| **Constraint Name** : SMTMIBOperationGrp_PmfReq<br>**Structured Type** : GroupAttribute<br>**Comments** : | | | |
| **Constraint Value** | | | |
| { | ParameterType | '10032'H, | |
| | Parameter_Length | '0000'H | } |

| ASN.1 Type Constraint Declaration | | | |
|---|---|---|---|
| **Constraint Name** : SMTTimeStamp_01<br>**Structured Type** : SMTTimeStamp<br>**Derivation Path** :<br>**Comments** : | | | |
| **Constraint Value** | | | |
| { | Parameter_Type | '1033'H, | |
| | Parameter_Length | '0008'H, | |
| | timestamptype | CMNTimeStampType_Q | } |

| ASN.1 Type Constraint Declaration | | | |
|---|---|---|---|
| **Constraint Name** : SMTTransitionTimeStamp_01<br>**Structured Type** : SMTTransitionTimeStamp<br>**Derivation Path** :<br>**Comments** : | | | |
| **Constraint Value** | | | |
| { | Parameter_Type | '1034'H, | |
| | Parameter_Length | '0008'H, | |
| | transitiontimestamptype | CMNTimeStampType_Q | } |


Copyright International Organization for Standardization
Provided by IHS under license with ISO
No reproduction or networking permitted without license from IHS Not for Resale

| ASN.1 Type Constraint Declaration | | |
|---|---|---|
| **Constraint Name** | : | SMTSetCount_01 |
| **Structured Type** | : | SMTSetCount |
| **Derivation Path** | : | |
| **Comments** | : | |

| Constraint Value | | |
|---|---|---|
| { | Parameter_Type | ‘1035’H, |
| | Parameter_Length | ‘0008’H, |
| | PAD | PAD_2, |
| | setcounttype | SMTSetCountType_Q } |

| ASN.1 Type Constraint Declaration | | |
|---|---|---|
| **Constraint Name** | : | SMTLastSetStationId_01 |
| **Structured Type** | : | SMTLastSetStationId |
| **Derivation Path** | : | |
| **Comments** | : | |

| Constraint Value | | |
|---|---|---|
| { | Parameter_Type | ‘1036’H, |
| | Parameter_Length | ‘0008’H, |
| | PAD | PAD_2, |
| | lastsetstationidtype | SMTStationIdentifierType_Q } |

| ASN.1 Type Constraint Declaration | | |
|---|---|---|
| **Constraint Name** | : | SMTVendorAttrib_01 |
| **Structured Type** | : | SMTVendorAttrib |
| **Derivation Path** | : | |
| **Comments** | : | |

| Constraint Value | | |
|---|---|---|
| { | Parameter_Type | ‘10FF’H, |
| | Parameter_Length | ?, |
| | PAD | ?, |
| | vendorattrib | CMNVendorMIBType_Q} |



Copyright International Organization for Standardization
Provided by IHS under license with ISO
No reproduction or networking permitted without license from IHS
Not for Resale

### 9.3.1.2 ASN.1 Type Constraint for MAC Attributes

#### 9.3.1.2.1 MAC Capabilities Group Attributes Constraints

| ASN.1 Type Constraint Declaration | | |
|---|---|---|
| **Constraint Name** | : | MACCapabilities_Grp_00 |
| **Structured Type** | : | MACCapabilities_Group |
| **Comments** | : | |
| **Constraint Value** | | |
| { framestatusfunctions | | MACFrameStatusFunctions_01, |
| bridgefunctions | | MACBridgeFunctions_01, |
| tmaxcapability | | MACT_MaxCapability_01, |
| tvxcapability | | MACTVXCapability_01 } |

| ASN.1 Type Constraint Declaration | | |
|---|---|---|
| **Constraint Name** | : | MACCapabilitiesGrp_PmfReq |
| **Structured Type** | : | GroupAttribute |
| **Comments** | : | |
| **Constraint Value** | | |
| { ParameterType | | ‘200A’H, |
| Parameter_Length | | ‘0000’H } |

| ASN.1 Type Constraint Declaration | | |
|---|---|---|
| **Constraint Name** | : | MACFrameStatusFunctions_01 |
| **Structured Type** | : | MACFrameStatusFunctions |
| **Derivation Path** | : | |
| **Comments** | : | |
| **Constraint Value** | | |
| { Parameter_Type | | ‘200B’H, |
| Parameter_Length | | ‘0008’H, |
| PAD | | PAD_2, |
| macindex | | MACINDEX_REF, |
| PAD | | PAD_2, |
| framestatusfunctionstype | | MACFS_Functions_00 } |


Copyright International Organization for Standardization
Provided by IHS under license with ISO
No reproduction or networking permitted without license from IHS
Not for Resale

| ASN.1 Type Constraint Declaration | | | |
|---|---|---|---|
| **Constraint Name** | : MACFrameStatusFunctions_Q | | |
| **Structured Type** | : MACFrameStatusFunctions | | |
| **Derivation Path** | : MACFrameStatusFunctions_01 | | |
| **Comments** | : | | |
| **Constraint Value** | | | |
| REPLACE | fsfunctions | BY | MACFS_Functions_Q } |

| ASN.1 Type Constraint Declaration | | | |
|---|---|---|---|
| **Constraint Name** | : MACFrameStatusFunctions_PmfReq | | |
| **Structured Type** | : MACFrameStatusFunctions | | |
| **Derivation Path** | : MACFrameStatusFunctions_01 | | |
| **Comments** | : | | |
| **Constraint Value** | | | |
| REPLACE | Parameter_Length | BY | ‘0000’H, |
| OMIT | PAD, | | |
| OMIT | macindex, | | |
| OMIT | PAD, | | |
| OMIT | fsfunctions | | |

| ASN.1 Type Constraint Declaration | | |
|---|---|---|
| **Constraint Name** | : MACBridgeFunction_01 | |
| **Structured Type** | : MACBridgeFunctions | |
| **Derivation Path** | : | |
| **Comments** | : | |
| **Constraint Value** | | |
| { | Parameter_Type | ‘200C’H, |
| | Parameter_Length | ‘0008’H, |
| | PAD | PAD_2, |
| | macindex | MACINDEX_REF, |
| | PAD | PAD_2, |
| | bridgetype | MACBridgeType_Q } |

| ASN.1 Type Constraint Declaration | | | |
|---|---|---|---|
| **Constraint Name** | : MACBridgeFunction_PmfReq | | |
| **Structured Type** | : MACBridgeFunctions | | |
| **Derivation Path** | : MACBridgeFunction_01 | | |
| **Comments** | : | | |
| **Constraint Value** | | | |
| REPLACE | Parameter_Length | BY | ‘0000’H, |
| OMIT | PAD, | | |
| OMIT | macindex, | | |
| OMIT | PAD, | | |
| OMIT | bridgetype | | |



Copyright International Organization for Standardization
Provided by IHS under license with ISO
No reproduction or networking permitted without license from IHS
Not for Resale

| ASN.1 Type Constraint Declaration | | |
|---|---|---|
| **Constraint Name** | **:** | MACT_MaxCapability_01 |
| **Structured Type** | **:** | MACT_MaxCapability |
| **Derivation Path** | **:** | |
| **Comments** | **:** | |

| Constraint Value | | |
|---|---|---|
| { | Parameter_Type | ‘200D’H, |
| | Parameter_Length | ‘0008’H, |
| | PAD | PAD_2, |
| | macindex | MACINDEX_REF, |
| | tmaxcapabilitytype | CMNTwosComplementType_Q } |

| ASN.1 Type Constraint Declaration | | |
|---|---|---|
| **Constraint Name** | **:** | MACT_MaxCapability_PmfReq |
| **Structured Type** | **:** | MACT_MaxCapability |
| **Derivation Path** | **:** | MACT_MaxCapability_01 |
| **Comments** | **:** | |

| Constraint Value | | | |
|---|---|---|---|
| REPLACE | Parameter_Length | BY | ‘0000’H, |
| OMIT | PAD, | | |
| OMIT | macindex, | | |
| OMIT | tmaxcapabilitytype | | |

| ASN.1 Type Constraint Declaration | | |
|---|---|---|
| **Constraint Name** | **:** | MACTVXCapability_01 |
| **Structured Type** | **:** | MACTVXCapability |
| **Derivation Path** | **:** | |
| **Comments** | **:** | |

| Constraint Value | | |
|---|---|---|
| { | Parameter_Type | ‘200E’H, |
| | Parameter_Length | ‘0008’H, |
| | PAD | PAD_2, |
| | macindex | MACINDEX_REF, |
| | tvacapabilitytype | CMNTwosComplementType_Q } |


Copyright International Organization for Standardization
Provided by IHS under license with ISO
No reproduction or networking permitted without license from IHS
Not for Resale

| ASN.1 Type Constraint Declaration | | | |
|---|---|---|---|
| **Constraint Name** | **:** MACTVXCapability_PmfReq | | |
| **Structured Type** | **:** MACTVXCapability | | |
| **Derivation Path** | **:** MACTVXCapability_01 | | |
| **Comments** | **:** | | |
| **Constraint Value** | | | |
| REPLACE | Parameter_Length | BY | ‘0000’H, |
| OMIT | PAD, | | |
| OMIT | macindex, | | |
| OMIT | tvxcapabilitytype | | |

#### 9.3.1.2.2 MAC Configuration Group Attributes Constraints

| ASN.1 Type Constraint Declaration | | |
|---|---|---|
| **Constraint Name** | **:** MACConfig_Grp_00 | |
| **Structured Type** | **:** MACConfig_Group | |
| **Comments** | **:** | |
| **Constraint Value** | | |
| { | availablepaths | MACAvailablePaths_01, |
| | currentpath | MACCurrentPath_01, |
| | upstreamnbr | MACUpstreamNbr_01, |
| | downstreamnbr | MACDownstreamNbr_01, |
| | oldupstreamnbr | MACOldUpstreamNbr_01, |
| | olddownstreamnbr | MACOldDownstreamNbr_01, |
| | dupaddresstest | MACDupAddressTest_01, |
| | requestedpaths | MACRequestedPaths_01, |
| | downstreamporttype | MACDownstreamPORTType_01, |
| | macindex | MACIndex_01 } |

| ASN.1 Type Constraint Declaration | | |
|---|---|---|
| **Constraint Name** | **:** MACConfigGrp_PmfReq | |
| **Structured Type** | **:** GroupAttribute | |
| **Comments** | **:** | |
| **Constraint Value** | | |
| { | ParameterType | ‘2014’H, |
| | Parameter_Length | ‘0000’H } |



Copyright International Organization for Standardization
Provided by IHS under license with ISO
No reproduction or networking permitted without license from IHS
Not for Resale

| ASN.1 Type Constraint Declaration | | |
|---|---|---|
| **Constraint Name** | : | MACAvailablePaths_01 |
| **Structured Type** | : | MACAvailablePaths |
| **Derivation Path** | : | |
| **Comments** | : | |

**Constraint Value**

```
{       Parameter_Type          ‘2016’H,
        Parameter_Length        ‘0008’H,
        PAD                     PAD_2,
        macindex                MACINDEX_REF,
        PAD                     PAD_1,
        availablepathstype      CMNAvailablePathsType_Q     }
```

| ASN.1 Type Constraint Declaration | | |
|---|---|---|
| **Constraint Name** | : | MACCurrentPath_01 |
| **Structured Type** | : | MACCurrentPath |
| **Derivation Path** | : | |
| **Comments** | : | |

**Constraint Value**

```
{       Parameter_Type          ‘2017’H,
        Parameter_Length        ‘0008’H,
        PAD                     PAD_2,
        macindex                MACINDEX_REF,
        PAD                     PAD_2,
        currentpathtype         CMNCurrentPathsType_Q       }
```

| ASN.1 Type Constraint Declaration | | |
|---|---|---|
| **Constraint Name** | : | MACUpstreamNbr_01 |
| **Structured Type** | : | MACUpstreamNbr |
| **Derivation Path** | : | |
| **Comments** | : | |

**Constraint Value**

```
{       Parameter_Type          ‘2018’H,
        Parameter_Length        ‘000C’H,
        PAD                     PAD_2,
        macindex                MACINDEX_REF,
        PAD                     PAD_2,
        upstreamnbrtype         CMNLongAddress_Q    }
```


Copyright International Organization for Standardization
Provided by IHS under license with ISO
No reproduction or networking permitted without license from IHS
Not for Resale

| ASN.1 Type Constraint Declaration | | |
|---|---|---|
| **Constraint Name** | : | MACDownstreamNbr_01 |
| **Structured Type** | : | MACDownstreamNbr |
| **Derivation Path** | : | |
| **Comments** | : | |

| Constraint Value | | |
|---|---|---|
| { | Parameter_Type | ‘2019’H, |
| | Parameter_Length | ‘000C’H, |
| | PAD | PAD_2, |
| | macindex | MACINDEX_REF, |
| | PAD | PAD_2, |
| | downstreamnbrtype | CMNLongAddressType_Q } |

| ASN.1 Type Constraint Declaration | | |
|---|---|---|
| **Constraint Name** | : | MACDownstreamNbr_Pmf_00 |
| **Structured Type** | : | MACDownstreamNbr |
| **Derivation Path** | : | MACDownstreamNbr_01 |
| **Comments** | : | |

| Constraint Value | | | |
|---|---|---|---|
| REPLACE | Parameter_Length | BY | ‘0004’H, |
| OMIT | PAD, | | |
| OMIT | macindex, | | |
| OMIT | PAD, | | |
| OMIT | downstreamnbrtype | | |

| ASN.1 Type Constraint Declaration | | |
|---|---|---|
| **Constraint Name** | : | MACOldUpstreamNbr_01 |
| **Structured Type** | : | MACOldUpstreamNbr |
| **Derivation Path** | : | |
| **Comments** | : | |

| Constraint Value | | |
|---|---|---|
| { | Parameter_Type | ‘201A’H, |
| | Parameter_Length | ‘000C’H, |
| | PAD | PAD_2, |
| | macindex | MACINDEX_REF, |
| | PAD | PAD_2, |
| | oldupstreamnbrtype | CMNLongAddressType_Q } |



Copyright International Organization for Standardization
Provided by IHS under license with ISO
No reproduction or networking permitted without license from IHS
Not for Resale

| ASN.1 Type Constraint Declaration | | | |
|---|---|---|---|
| **Constraint Name** | **:** MACOldUpstreamNbr_Pmf_00 | | |
| **Structured Type** | **:** MACOldUpstreamNbr | | |
| **Derivation Path** | **:** MACOldUpstreamNbr_01 | | |
| **Comments** | **:** | | |
| **Constraint Value** | | | |
| REPLACE | Parameter_Length | BY | ‘0004’H, |
| OMIT | PAD, | | |
| OMIT | macindex, | | |
| OMIT | PAD, | | |
| OMIT | oldupstreamnbrtype | | |

| ASN.1 Type Constraint Declaration | | |
|---|---|---|
| **Constraint Name** | **:** MACOldDownstreamNbr_01 | |
| **Structured Type** | **:** MACOldDownstreamNbr | |
| **Derivation Path** | **:** | |
| **Comments** | **:** | |
| **Constraint Value** | | |
| { | Parameter_Type | ‘201B’H, |
| | Parameter_Length | ‘000C’H, |
| | PAD | PAD_2, |
| | macindex | MACINDEX_REF, |
| | PAD | PAD_2, |
| | olddownstreamnbrtype | CMNLongAddressType_Q } |

| ASN.1 Type Constraint Declaration | | |
|---|---|---|
| **Constraint Name** | **:** MACDupAddressTest_01 | |
| **Structured Type** | **:** MACDupAddressTest | |
| **Derivation Path** | **:** | |
| **Comments** | **:** | |
| **Constraint Value** | | |
| { | Parameter_Type | ‘201D’H, |
| | Parameter_Length | ‘0004’H, |
| | PAD | PAD_2, |
| | macindex | MACINDEX_REF, |
| | PAD | PAD_2, |
| | dupaddresstesttest | MACDupAddressTestType_Q } |


Copyright International Organization for Standardization
Provided by IHS under license with ISO
No reproduction or networking permitted without license from IHS
Not for Resale

| ASN.1 Type Constraint Declaration | | |
|---|---|---|
| **Constraint Name** | : | MACRequestedPaths_01 |
| **Structured Type** | : | MACRequestedPaths |
| **Derivation Path** | : | |
| **Comments** | : | |

**Constraint Value**

```
{       Parameter_Type          ‘2020’H,
        Parameter_Length        ‘0008’H,
        PAD                     PAD_2,
        macindex                MACINDEX_REF,
        PAD                     PAD_1,
        requestedpathstype      CMNPermittedPathsType_Q     }
```

| ASN.1 Type Constraint Declaration | | |
|---|---|---|
| **Constraint Name** | : | MACDownstreamPORTType_01 |
| **Structured Type** | : | MACDownstreamPORTType |
| **Derivation Path** | : | |
| **Comments** | : | |

**Constraint Value**

```
{       Parameter_Type          ‘2021’H,
        Parameter_Length        ‘0008’H,
        PAD                     PAD_2,
        macindex                MACINDEX_REF,
        PAD                     PAD_2,
        downstreamporttype      CMNPortType_Q       }
```

| ASN.1 Type Constraint Declaration | | |
|---|---|---|
| **Constraint Name** | : | MACIndex_01 |
| **Structured Type** | : | MACIndex |
| **Derivation Path** | : | |
| **Comments** | : | |

**Constraint Value**

```
{       Parameter_Type          ‘2022’H,
        Parameter_Length        ‘0008’H,
        PAD                     PAD_2,
        macindex                MACINDEX_REF,
        PAD                     PAD_2,
        macindextype            CMNResourceIdType_Q     }
```



Copyright International Organization for Standardization
Provided by IHS under license with ISO
No reproduction or networking permitted without license from IHS
Not for Resale

#### 9.3.1.2.3 MAC Address Group Attributes Constraints

| ASN.1 Type Constraint Declaration | | | |
|---|---|---|---|
| **Constraint Name** : MACAddress_Grp_00<br>**Structured Type** : MACAddress_Group<br>**Comments** : | | | |
| **Constraint Value** | | | |
| { | smtaddress | MACSMTAddress_01, | |
| | longgrpaddress | MACLong_QAddress_01, | -- optional when HP |
| | shortgrpaddress | MACShort_QAddress_01 | -- optional when HP } |

| ASN.1 Type Constraint Declaration | | | |
|---|---|---|---|
| **Constraint Name** : MACAddressGrp_PmfReq<br>**Structured Type** : GroupAttribute<br>**Comments** : | | | |
| **Constraint Value** | | | |
| { | ParameterType | ‘2028’H, | |
| | Parameter_Length | ‘0000’H | } |

| ASN.1 Type Constraint Declaration | | | |
|---|---|---|---|
| **Constraint Name** : MACSMTAddress_01<br>**Structured Type** : MACSMTAddress<br>**Derivation Path** :<br>**Comments** : | | | |
| **Constraint Value** | | | |
| { | Parameter_Type | ‘2029’H, | |
| | Parameter_Length | ‘0008’H, | |
| | PAD | PAD_2, | |
| | macindex | MACINDEX_REF, | |
| | PAD | PAD_2, | |
| | smtaddersstype | CMNLongAddress_Q | } |


Copyright International Organization for Standardization
Provided by IHS under license with ISO
No reproduction or networking permitted without license from IHS
Not for Resale

| ASN.1 Type Constraint Declaration | |
|---|---|
| **Constraint Name** | : MACLongGrpAddress_01 |
| **Structured Type** | : MACLongGrpAddress |
| **Derivation Path** | : |
| **Comments** | : |

**Constraint Value**

```
{       Parameter_Type          ‘202C’H,
        Parameter_Length        ?,
        PAD                     PAD_2,
        macindex                MACINDEX_REF,
        PAD                     PAD_2,
        longgrpaddresstype      SET OF CMNLongAddress_Q    }
```

| ASN.1 Type Constraint Declaration | |
|---|---|
| **Constraint Name** | : MACShortGrpAddress_01 |
| **Structured Type** | : MACShortGrpAddress |
| **Derivation Path** | : |
| **Comments** | : |

**Constraint Value**

```
{       Parameter_Type          ‘202D’H,
        Parameter_Length        ?,
        PAD                     PAD_2,
        macindex                MACINDEX_REF,
        PAD                     PAD_2,
        shortgrpaddresstype     SET OF MACShortAddressType_Q       }
```

#### 9.3.1.2.4 MAC Operation Group Attributes Constraints

| ASN.1 Type Constraint Declaration | |
|---|---|
| **Constraint Name** | : MACOperation_Grp_00 |
| **Structured Type** | : MACOperation_Group |
| **Comments** | : |

**Constraint Value**

```
{       treq            MACT_Req_01,
        tneg            MACT_Neg_01,
        tmax            MACT_Max_01,
        tvxvalue        MACTvxValue_01,
        tpri0           MACT_Pri0_01,       -- optional when HP
        tpri1           MACT_Pri1_01,       -- optional when HP
        tpri2           MACT_Pri2_01,       -- optional when HP
        tpri3           MACT_Pri3_01,       -- optional when HP
        tpri4           MACT_Pri4_01,       -- optional when HP
        tpri5           MACT_Pri5_01,       -- optional when HP
        tpri6           MACT_Pri6_01        -- optional when HP     }
```



Copyright International Organization for Standardization
Provided by IHS under license with ISO
No reproduction or networking permitted without license from IHS
Not for Resale

| ASN.1 Type Constraint Declaration | | |
|---|---|---|
| **Constraint Name** : MACOperationGrp_PmfReq<br>**Structured Type** : GroupAttribute<br>**Comments** : | | |
| **Constraint Value** | | |
| { | ParameterType<br>Parameter_Length | ‘2032’H,<br>‘0000’H } |

| ASN.1 Type Constraint Declaration | | |
|---|---|---|
| **Constraint Name** : MACT_Req_01<br>**Structured Type** : MACT_Req<br>**Derivation Path** :<br>**Comments** : | | |
| **Constraint Value** | | |
| { | Parameter_Type<br>Parameter_Length<br>PAD<br>macindex<br>treqtype | ‘2033’H,<br>‘0008’H,<br>PAD_2,<br>MACINDEX_REF,<br>MACTReqType_Q } |

| ASN.1 Type Constraint Declaration | | |
|---|---|---|
| **Constraint Name** : MACT_Neg_01<br>**Structured Type** : MACT_Neg<br>**Derivation Path** :<br>**Comments** : | | |
| **Constraint Value** | | |
| { | Parameter_Type<br>Parameter_Length<br>PAD<br>macindex<br>tnegtype | ‘2034’H,<br>‘0008’H,<br>PAD_2,<br>MACINDEX_REF,<br>MACT_NegType_Q } |


Copyright International Organization for Standardization
Provided by IHS under license with ISO
No reproduction or networking permitted without license from IHS
Not for Resale

| ASN.1 Type Constraint Declaration | | |
|---|---|---|
| **Constraint Name** | : | MACT_Max_01 |
| **Structured Type** | : | MACT_Max |
| **Derivation Path** | : | |
| **Comments** | : | |

**Constraint Value**

```
{       Parameter_Type          ‘2035’H,
        Parameter_Length        ‘0008’H,
        PAD                     PAD_2,
        macindex                MACINDEX_REF,
        tmaxtype                MACTMaxType_Q       }
```

| ASN.1 Type Constraint Declaration | | |
|---|---|---|
| **Constraint Name** | : | MACTvxValue_01 |
| **Structured Type** | : | MACTvxValue |
| **Derivation Path** | : | |
| **Comments** | : | |

**Constraint Value**

```
{       Parameter_Type          ‘2036’H,
        Parameter_Length        ‘0008’H,
        PAD                     PAD_2,
        macindex                MACINDEX_REF,
        tvxvaluetype            MACTVXValueType_Q  }
```

| ASN.1 Type Constraint Declaration | | |
|---|---|---|
| **Constraint Name** | : | MACT_Pri0_01 |
| **Structured Type** | : | MACT_Pri0 |
| **Derivation Path** | : | |
| **Comments** | : | |

**Constraint Value**

```
{       Parameter_Type          ‘2038’H,
        Parameter_Length        ‘0008’H,
        PAD                     PAD_2,
        macindex                MACINDEX_REF,
        tpri0type               MACT_Pri0Type_Q     }
```



Copyright International Organization for Standardization
Provided by IHS under license with ISO
No reproduction or networking permitted without license from IHS
Not for Resale

| ASN.1 Type Constraint Declaration | | |
|---|---|---|
| **Constraint Name** | : | MACT_Pri1_01 |
| **Structured Type** | : | MACT_Pri1 |
| **Derivation Path** | : | |
| **Comments** | : | |

| Constraint Value | | |
|---|---|---|
| { | Parameter_Type | ‘2039’H, |
| | Parameter_Length | ‘0008’H, |
| | PAD | PAD_2, |
| | macindex | MACINDEX_REF, |
| | tpri1type | MACT_Pri1Type_Q } |

| ASN.1 Type Constraint Declaration | | |
|---|---|---|
| **Constraint Name** | : | MACT_Pri2_01 |
| **Structured Type** | : | MACT_Pri2 |
| **Derivation Path** | : | |
| **Comments** | : | |

| Constraint Value | | |
|---|---|---|
| { | Parameter_Type | ‘203A’H, |
| | Parameter_Length | ‘0008’H, |
| | PAD | PAD_2, |
| | macindex | MACINDEX_REF, |
| | tpri2type | MACT_Pri2Type_Q } |

| ASN.1 Type Constraint Declaration | | |
|---|---|---|
| **Constraint Name** | : | MACT_Pri3_01 |
| **Structured Type** | : | MACT_Pri3 |
| **Derivation Path** | : | |
| **Comments** | : | |

| Constraint Value | | |
|---|---|---|
| { | Parameter_Type | ‘203B’H, |
| | Parameter_Length | ‘0008’H, |
| | PAD | PAD_2, |
| | macindex | MACINDEX_REF, |
| | tpri3type | MACT_Pri3Type_Q } |


Copyright International Organization for Standardization
Provided by IHS under license with ISO
No reproduction or networking permitted without license from IHS Not for Resale

| ASN.1 Type Constraint Declaration | | |
|---|---|---|
| **Constraint Name** | : | MACT_Pri4_01 |
| **Structured Type** | : | MACT_Pri4 |
| **Derivation Path** | : | |
| **Comments** | : | |

| Constraint Value | | |
|---|---|---|
| { | Parameter_Type | ‘203C’H, |
| | Parameter_Length | ‘0008’H, |
| | PAD | PAD_2, |
| | macindex | MACINDEX_REF, |
| | tpri4type | MACT_Pri4Type_Q } |

| ASN.1 Type Constraint Declaration | | |
|---|---|---|
| **Constraint Name** | : | MACT_Pri5_01 |
| **Structured Type** | : | MACT_Pri5 |
| **Derivation Path** | : | |
| **Comments** | : | |

| Constraint Value | | |
|---|---|---|
| { | Parameter_Type | ‘203D’H, |
| | Parameter_Length | ‘0008’H, |
| | PAD | PAD_2, |
| | macindex | MACINDEX_REF, |
| | tpri5type | MACT_Pri5Type_Q } |

| ASN.1 Type Constraint Declaration | | |
|---|---|---|
| **Constraint Name** | : | MACT_Pri6_01 |
| **Structured Type** | : | MACT_Pri6 |
| **Derivation Path** | : | |
| **Comments** | : | |

| Constraint Value | | |
|---|---|---|
| { | Parameter_Type | ‘203E’H, |
| | Parameter_Length | ‘0008’H, |
| | PAD | PAD_2, |
| | macindex | MACINDEX_REF, |
| | tpri6type | MACT_Pri6Type_Q } |



Copyright International Organization for Standardization
Provided by IHS under license with ISO
No reproduction or networking permitted without license from IHS
Not for Resale

### 9.3.1.2.5 MAC Counters Group Attributes Constraints

| ASN.1 Type Constraint Declaration | | | |
|---|---|---|---|
| **Constraint Name** | : MACCounters_Grp_00 | | |
| **Structured Type** | : MACCounters_Group | | |
| **Comments** | : | | |
| **Constraint Value** | | | |
| { | framect | MACFrame_Ct_01, | |
| | copiedct | MACCopied_Ct_01, | |
| | transmitct | MACTransmit_Ct_01, | |
| | tokenct | MACToken_Ct_01, | -- optional when HP |
| | errorct | MACError_Ct_01, | |
| | lostct | MACLost_Ct_01, | |
| | tvxespiredct | MACTvxExpired_Ct_01, | -- optional when HP |
| | notcopiedct | MACNotCopied_Ct_01, | -- optional when HP |
| | latect | MACLate_Ct_01, | -- optional when HP |
| | ringopct | MACRingOp_Ct_01 | -- optional when HP } |

| ASN.1 Type Constraint Declaration | | | |
|---|---|---|---|
| **Constraint Name** | : MACCountersGrp_PmfReq | | |
| **Structured Type** | : GroupAttribute | | |
| **Comments** | : | | |
| **Constraint Value** | | | |
| { | ParameterType | ‘2046’H, | |
| | Parameter_Length | ‘0000’H | } |

| ASN.1 Type Constraint Declaration | | | |
|---|---|---|---|
| **Constraint Name** | : MACFrame_Ct_01 | | |
| **Structured Type** | : MACFrame_Ct | | |
| **Derivation Path** | : | | |
| **Comments** | : | | |
| **Constraint Value** | | | |
| { | Parameter_Type | ‘2047’H, | |
| | Parameter_Length | ‘0008’H, | |
| | PAD | PAD_2, | |
| | macindex | MACINDEX_REF, | |
| | framecttype | MACFrame_CtType_Q | } |


Copyright International Organization for Standardization
Provided by IHS under license with ISO
No reproduction or networking permitted without license from IHS
Not for Resale

| ASN.1 Type Constraint Declaration | | |
|---|---|---|
| **Constraint Name** | : | MACCopied_Ct_01 |
| **Structured Type** | : | MACCopied_Ct |
| **Derivation Path** | : | |
| **Comments** | : | |

| Constraint Value | | |
|---|---|---|
| { | Parameter_Type | ‘2048’H, |
| | Parameter_Length | ‘0008’H, |
| | PAD | PAD_2, |
| | macindex | MACINDEX_REF, |
| | copiedcttype | MACCopied_CtType_Q } |

| ASN.1 Type Constraint Declaration | | |
|---|---|---|
| **Constraint Name** | : | MACTransmit_Ct_01 |
| **Structured Type** | : | MACTransmit_Ct |
| **Derivation Path** | : | |
| **Comments** | : | |

| Constraint Value | | |
|---|---|---|
| { | Parameter_Type | ‘2049’H, |
| | Parameter_Length | ‘0008’H, |
| | PAD | PAD_2, |
| | macindex | MACINDEX_REF, |
| | transmitcttype | MACTransmit_CtType_Q } |

| ASN.1 Type Constraint Declaration | | |
|---|---|---|
| **Constraint Name** | : | MACToken_Ct_01 |
| **Structured Type** | : | MACToken_Ct |
| **Derivation Path** | : | |
| **Comments** | : | |

| Constraint Value | | |
|---|---|---|
| { | Parameter_Type | ‘204A’H, |
| | Parameter_Length | ‘0008’H, |
| | PAD | PAD_2, |
| | macindex | MACINDEX_REF, |
| | tokencttype | MACToken_CtType_Q } |



Copyright International Organization for Standardization
Provided by IHS under license with ISO
No reproduction or networking permitted without license from IHS
Not for Resale

| ASN.1 Type Constraint Declaration | | |
|---|---|---|
| **Constraint Name** | : | MACError_Ct_01 |
| **Structured Type** | : | MACError_Ct |
| **Derivation Path** | : | |
| **Comments** | : | |

| Constraint Value | | |
|---|---|---|
| { | Parameter_Type | ‘2051’H, |
| | Parameter_Length | ‘0008’H, |
| | PAD | PAD_2, |
| | macindex | MACINDEX_REF, |
| | errorcttype | MACError_CtType_Q } |

| ASN.1 Type Constraint Declaration | | |
|---|---|---|
| **Constraint Name** | : | MACLost_Ct_01 |
| **Structured Type** | : | MACLost_Ct |
| **Derivation Path** | : | |
| **Comments** | : | |

| Constraint Value | | |
|---|---|---|
| { | Parameter_Type | ‘2052’H, |
| | Parameter_Length | ‘0008’H, |
| | PAD | PAD_2, |
| | macindex | MACINDEX_REF, |
| | lostcttype | MACLost_CtType_Q } |

| ASN.1 Type Constraint Declaration | | |
|---|---|---|
| **Constraint Name** | : | MACTvxExpired_Ct_01 |
| **Structured Type** | : | MACTvxExpired_Ct |
| **Derivation Path** | : | |
| **Comments** | : | |

| Constraint Value | | |
|---|---|---|
| { | Parameter_Type | ‘2053’H, |
| | Parameter_Length | ‘0008’H, |
| | PAD | PAD_2, |
| | macindex | MACINDEX_REF, |
| | tvxexpiredcttype | MACTvxExpired_CtType_Q } |


Copyright International Organization for Standardization
Provided by IHS under license with ISO
No reproduction or networking permitted without license from IHS
Not for Resale

| ASN.1 Type Constraint Declaration | | |
|---|---|---|
| **Constraint Name** | : | MACNotCopied_Ct_01 |
| **Structured Type** | : | MACNotCopied_Ct |
| **Derivation Path** | : | |
| **Comments** | : | |

| Constraint Value | | |
|---|---|---|
| { | Parameter_Type | ‘2054’H, |
| | Parameter_Length | ‘0008’H, |
| | PAD | PAD_2, |
| | macindex | MACINDEX_REF, |
| | notcopiedcttype | MACNotCopied_CtType_Q } |

| ASN.1 Type Constraint Declaration | | |
|---|---|---|
| **Constraint Name** | : | MACLate_Ct_01 |
| **Structured Type** | : | MACLate_Ct |
| **Derivation Path** | : | |
| **Comments** | : | |

| Constraint Value | | |
|---|---|---|
| { | Parameter_Type | ‘2055’H, |
| | Parameter_Length | ‘0008’H, |
| | PAD | PAD_2, |
| | macindex | MACINDEX_REF, |
| | latecttype | MACLate_CtType_Q } |

| ASN.1 Type Constraint Declaration | | |
|---|---|---|
| **Constraint Name** | : | MACRingOp_Ct_01 |
| **Structured Type** | : | MACRingOp_Ct |
| **Derivation Path** | : | |
| **Comments** | : | |

| Constraint Value | | |
|---|---|---|
| { | Parameter_Type | ‘2056’H, |
| | Parameter_Length | ‘0008’H, |
| | PAD | PAD_2, |
| | macindex | MACINDEX_REF, |
| | ringopcttype | MACRingOp_CtType_Q} |



Copyright International Organization for Standardization
Provided by IHS under license with ISO
No reproduction or networking permitted without license from IHS
Not for Resale

#### 9.3.1.2.6 MAC Frame Error Condition Group Attributes Constraints

| ASN.1 Type Constraint Declaration | | |
|---|---|---|
| **Constraint Name** : MACFrameErrorCondition_Grp_00<br>**Structured Type** : MACFrameErrorCondition_Group<br>**Comments** : | | |
| **Constraint Value** | | |
| { | frameerrorthreshold | MACFrameErrorThreshold_Q, |
| | frameerrorratio | MACFrameErrorRatio_Q } |

| ASN.1 Type Constraint Declaration | | |
|---|---|---|
| **Constraint Name** : MACFrameErrorConditionGrp_PmfReq<br>**Structured Type** : GroupAttribute<br>**Comments** : | | |
| **Constraint Value** | | |
| { | ParameterType | ‘205A’H, |
| | Parameter_Length | ‘0000’H } |

| ASN.1 Type Constraint Declaration | | |
|---|---|---|
| **Constraint Name** : MACFrameErrorThreshold_Q<br>**Structured Type** : MACFrameErrorThreshold<br>**Derivation Path** :<br>**Comments** : | | |
| **Constraint Value** | | |
| { | Parameter_Type | ‘205F’H, |
| | Parameter_Length | ‘0008’H, |
| | PAD | PAD_2, |
| | macindex | MACINDEX_REF, |
| | PAD | PAD_2, |
| | frameerrorthresholdtype | MACFrameErrorThresholdType_Q } |

--`,,```,,,,````-`-`,,`,,`,`,,`---



Copyright International Organization for Standardization
Provided by IHS under license with ISO
No reproduction or networking permitted without license from IHS
Not for Resale

| ASN.1 Type Constraint Declaration | | |
|---|---|---|
| **Constraint Name** | : | MACFrameErrorRatio_Q |
| **Structured Type** | : | MACFrameErrorRatio |
| **Derivation Path** | : | |
| **Comments** | : | |

| Constraint Value | | |
|---|---|---|
| { | Parameter_Type | ‘2060’H, |
| | Parameter_Length | ‘0008’H, |
| | PAD | PAD_2, |
| | macindex | MACINDEX_REF, |
| | PAD | PAD_2, |
| | frameerrorratiotype | MACFrameErrorRatioType } |

### 9.3.1.2.7 MAC Not Copied Condition Group Attributes Constraints

| ASN.1 Type Constraint Declaration | | |
|---|---|---|
| **Constraint Name** | : | MACNotCopiedCondition_Grp_00 |
| **Structured Type** | : | MACNotCopiedCondition_Group |
| **Comments** | : | |

| Constraint Value | | |
|---|---|---|
| { | macnotcopiedthreshold | MACNotCopiedThreshold_Q, -- optional |
| | macnotcopiedratio | MACNotCopiedRatio_Q -- optional when HP } |

| ASN.1 Type Constraint Declaration | | |
|---|---|---|
| **Constraint Name** | : | MACNotCopiedConditionGrp_PmfReq |
| **Structured Type** | : | GroupAttribute |
| **Comments** | : | |

| Constraint Value | | |
|---|---|---|
| { | ParameterType | ‘2064’H, |
| | Parameter_Length | ‘0000’H } |

--`,,```,,,,````-`-`,,`,,`,`,,`---



Copyright International Organization for Standardization
Provided by IHS under license with ISO
No reproduction or networking permitted without license from IHS Not for Resale

| ASN.1 Type Constraint Declaration | | |
|---|---|---|
| **Constraint Name** | : | MACNotCopiedThreshold_Q |
| **Structured Type** | : | MACNotCopiedThreshold |
| **Derivation Path** | : | |
| **Comments** | : | |

| Constraint Value | | |
|---|---|---|
| { | Parameter_Type | ‘2067’H, |
| | Parameter_Length | ‘0008’H, |
| | PAD | PAD_2, |
| | macindex | MACINDEX_REF, |
| | PAD | PAD_2, |
| | notcopiedthresholdtype | MACNotCopiedThresholdType_Q } |

| ASN.1 Type Constraint Declaration | | |
|---|---|---|
| **Constraint Name** | : | MACNotCopiedRatio_Q |
| **Structured Type** | : | MACNotCopiedRatio |
| **Derivation Path** | : | |
| **Comments** | : | |

| Constraint Value | | |
|---|---|---|
| { | Parameter_Type | ‘2069’H, |
| | Parameter_Length | ‘0008’H, |
| | PAD | PAD_2, |
| | macindex | MACINDEX_REF, |
| | PAD | PAD_2, |
| | notcopiedratiotype | MACNotCopiedRatioType_Q } |

### 9.3.1.2.8 MAC Status Group Attributes Constraints

| ASN.1 Type Constraint Declaration | | |
|---|---|---|
| **Constraint Name** | : | MACStatus_Grp_00 |
| **Structured Type** | : | MACStatus_Group |
| **Comments** | : | |

| Constraint Value | | |
|---|---|---|
| { | rmtstate | MACRMTState_Q, |
| | daflag | MACDA_Flag_Q, |
| | undaflag | MACUNDA_Flag_Q, |
| | frameerrorflag | MACFrameErrorFlag_Q, |
| | notcopiedflag | MACNotCopiedFlag_Q OPTIONAL |
| | unitdataavailable | MACUnitDataAvailable_Q, |
| | hardwarepresent | MACHardwarePresent_Q, |
| | maunitdataavailable | MACMA_UnitdataEnable_Q } |


Copyright International Organization for Standardization
Provided by IHS under license with ISO
No reproduction or networking permitted without license from IHS
Not for Resale

| ASN.1 Type Constraint Declaration | | |
|---|---|---|
| **Constraint Name** | : | MACStatusGrp_PmfReq |
| **Structured Type** | : | GroupAttribute |
| **Comments** | : | |

| Constraint Value | | |
|---|---|---|
| { | ParameterType | ‘206E’H, |
| | Parameter_Length | ‘0000’H } |

| ASN.1 Type Constraint Declaration | | |
|---|---|---|
| **Constraint Name** | : | MACRMTState_Q |
| **Structured Type** | : | MACRMTState |
| **Derivation Path** | : | |
| **Comments** | : | |

| Constraint Value | | |
|---|---|---|
| { | Parameter_Type | ‘206F’H, |
| | Parameter_Length | ‘0008’H, |
| | PAD | PAD_2, |
| | macindex | MACINDEX_REF, |
| | PAD | PAD_2, |
| | rmtstatetype | MACRMTStateType_Q } |

| ASN.1 Type Constraint Declaration | | |
|---|---|---|
| **Constraint Name** | : | MACDA_Flag_Q |
| **Structured Type** | : | MACDA_Flag |
| **Derivation Path** | : | |
| **Comments** | : | |

| Constraint Value | | |
|---|---|---|
| { | Parameter_Type | ‘2070’H, |
| | Parameter_Length | ‘0008’H, |
| | PAD | PAD_2, |
| | macindex | MACINDEX_REF, |
| | PAD | PAD_1, |
| | daflagtype | FALSE } |

--`,,```,,,,````-`-`,,`,,`,`,,`---



Copyright International Organization for Standardization
Provided by IHS under license with ISO
No reproduction or networking permitted without license from IHS
Not for Resale

| ASN.1 Type Constraint Declaration | | |
|---|---|---|
| **Constraint Name** | : | MACUNDA_Flag_Q |
| **Structured Type** | : | MACUNDA_Flag |
| **Derivation Path** | : | |
| **Comments** | : | |

| Constraint Value | | |
|---|---|---|
| { | Parameter_Type | ‘2071’H, |
| | Parameter_Length | ‘0008’H, |
| | PAD | PAD_2, |
| | macindex | MACINDEX_REF, |
| | PAD | PAD_1, |
| | undaflagtype | FALSE } |

| ASN.1 Type Constraint Declaration | | |
|---|---|---|
| **Constraint Name** | : | MACFrameErrorFlag_Q |
| **Structured Type** | : | MACFrameErrorFlag |
| **Derivation Path** | : | |
| **Comments** | : | |

| Constraint Value | | |
|---|---|---|
| { | Parameter_Type | ‘2072’H, |
| | Parameter_Length | ‘0008’H, |
| | PAD | PAD_2, |
| | macindex | MACINDEX_REF, |
| | PAD | PAD_1, |
| | frameerrorflagtype | FALSE } |

| ASN.1 Type Constraint Declaration | | |
|---|---|---|
| **Constraint Name** | : | MACNotCopiedFlag_Q |
| **Structured Type** | : | MACNotCopiedFlag |
| **Derivation Path** | : | |
| **Comments** | : | |

| Constraint Value | | |
|---|---|---|
| { | Parameter_Type | ‘2073’H, |
| | Parameter_Length | ‘0008’H, |
| | PAD | PAD_2, |
| | macindex | MACINDEX_REF, |
| | PAD | PAD_1, |
| | notcopiedflagtype | FALSE } |


Copyright International Organization for Standardization
Provided by IHS under license with ISO
No reproduction or networking permitted without license from IHS
Not for Resale

| ASN.1 Type Constraint Declaration | | |
|---|---|---|
| **Constraint Name** | : | MACMA_UnitdataAvailable_Q |
| **Structured Type** | : | MACMA_UnitdataAvailable |
| **Derivation Path** | : | |
| **Comments** | : | |

| Constraint Value | | |
|---|---|---|
| { | Parameter_Type | ‘2074’H, |
| | Parameter_Length | ‘0008’H, |
| | PAD | PAD_2, |
| | macindex | MACINDEX_REF, |
| | PAD | PAD_1, |
| | maunitdataavailabletype | FALSE } |

| ASN.1 Type Constraint Declaration | | |
|---|---|---|
| **Constraint Name** | : | MACHardwarepresent_Q |
| **Structured Type** | : | MACHardwarePresent |
| **Derivation Path** | : | |
| **Comments** | : | IUT does not have a MAC |

| Constraint Value | | |
|---|---|---|
| { | Parameter_Type | ‘2075’H, |
| | Parameter_Length | ‘0008’H, |
| | PAD | PAD_2, |
| | macindex | MACINDEX_REF, |
| | PAD | PAD_2, |
| | hwpresenttype | ‘00’I } |

| ASN.1 Type Constraint Declaration | | |
|---|---|---|
| **Constraint Name** | : | MACHardwarepresent_01 |
| **Structured Type** | : | MACHardwarePresent |
| **Derivation Path** | : | MACHardwarePresent_Q |
| **Comments** | : | IUT has a MAC |

| Constraint Value | | | |
|---|---|---|---|
| REPLACE | hwpresenttype | BY | ‘01’I |



Copyright International Organization for Standardization
Provided by IHS under license with ISO
No reproduction or networking permitted without license from IHS
Not for Resale

| ASN.1 Type Constraint Declaration | | |
|---|---|---|
| **Constraint Name** | : | MACMA_UnitdataEnable_Q |
| **Structured Type** | : | MACMA_UnitdataEnable |
| **Derivation Path** | : | |
| **Comments** | : | |

| Constraint Value | | |
|---|---|---|
| { | Parameter_Type | ‘2076’H, |
| | Parameter_Length | ‘0008’H, |
| | PAD | PAD_2, |
| | macindex | MACINDEX_REF, |
| | PAD | PAD_1, |
| | maunitdataenabletype | FALSE} |

| ASN.1 Type Constraint Declaration | | |
|---|---|---|
| **Constraint Name** | : | MACVendorAttrib_Q |
| **Structured Type** | : | MACVendorAttrib |
| **Derivation Path** | : | |
| **Comments** | : | |

| Constraint Value | | |
|---|---|---|
| { | Parameter_Type | ‘20FF’H, |
| | Parameter_Length | ?, |
| | PAD | PAD_2, |
| | macindex | MACINDEX_REF, |
| | PAD | ?, |
| | vendormibtype | CMNVendorMIBType_Q} |

### 9.3.1.3 ASN.1 Type Constraint for PATH Attributes

| ASN.1 Type Constraint Declaration | | |
|---|---|---|
| **Constraint Name** | : | PATHConfig_Grp_00 |
| **Structured Type** | : | PATHConfig_Group |
| **Comments** | : | |

| Constraint Value | | | |
|---|---|---|---|
| { | index | PATHIndex_Q, | |
| | ringlatency | PATHRingLatency_Q, | -- optional |
| | tracestatus | PATHTraceStatus_Q, | -- optional |
| | sbapayload | PATHSbaPayload_Q, | -- optional |
| | sbaoverhead | PATHSbaOverhead_Q, | -- optional |
| | configuration | PATHConfiguration_Q, | |
| | trmode | PATHT_Rmode_01, | -- optional |
| | sbaavailable | PATHSbaAvailable_01, | -- optional |
| | tvxlowerbound | PATHTVXLowerBound_01, | |
| | tmaxlowerbound | PATHT_MaxLowerBound_01, | |
| | maxtreq | PATHMaxT_Req_01 } | |


--`,,```,,,,````-`-`,,`,,`,`,,`---
Copyright International Organization for Standardization
Provided by IHS under license with ISO
No reproduction or networking permitted without license from IHS
Not for Resale

| ASN.1 Type Constraint Declaration | | | |
|---|---|---|---|
| **Constraint Name** | : PATHConfigGrp_PmfReq | | |
| **Structured Type** | : GroupAttribute | | |
| **Comments** | : | | |
| **Constraint Value** | | | |
| { | ParameterType | ‘320A’H, | |
| | Parameter_Length | ‘0000’H | } |

| ASN.1 Type Constraint Declaration | | | |
|---|---|---|---|
| **Constraint Name** | : PATHIndex_01 | | |
| **Structured Type** | : PATHIndex | | |
| **Derivation Path** | : PATHIndex_Q | | |
| **Comments** | : | | |
| **Constraint Value** | | | |
| { | Parameter_Type | ‘320B’H, | |
| | Parameter_Length | ‘0008’H, | |
| | PAD | PAD_2, | |
| | pathindex | PATHINDEX_REF, | -- primary path index |
| | PAD | PAD_2, | |
| | indextype | PATHIndexType_01 | } |

| ASN.1 Type Constraint Declaration | | | |
|---|---|---|---|
| **Constraint Name** | : PATHIndex_02 | | |
| **Structured Type** | : PATHIndex | | |
| **Derivation Path** | : PATHIndex_01 | | |
| **Comments** | : | | |
| **Constraint Value** | | | |
| REPLACE | pathindex | BY | SECONDARY_PATHINDEX, |
| REPLACE | indextype | BY | PATHIndexType_02 } |

| ASN.1 Type Constraint Declaration | | | | |
|---|---|---|---|---|
| **Constraint Name** | : PATHIndex_PmfReq | | | |
| **Structured Type** | : PATHIndex | | | |
| **Derivation Path** | : | | | |
| **Comments** | : | | | |
| **Constraint Value** | | | | |
| REPLACE | Parameter_Length | BY | ‘0004’H, | |
| REPLACE | pathindex | BY | ‘0000’H, | -- for all path indexes |
| OMIT | indextype | | | |



--`,,```,,,,````-`-`,,`,,`,`,,`---
Copyright International Organization for Standardization
Provided by IHS under license with ISO
No reproduction or networking permitted without license from IHS
Not for Resale

| ASN.1 Type Constraint Declaration | | |
|---|---|---|
| **Constraint Name** | : | PATHRingLatency_Q |
| **Structured Type** | : | PATHRingLatency |
| **Derivation Path** | : | |
| **Comments** | : | |

| Constraint Value | | |
|---|---|---|
| { | Parameter_Type | ‘320D’H, |
| | Parameter_Length | ‘0008’H, |
| | PAD | PAD_2, |
| | pathindex | PATHINDEX_REF, |
| | ringlatencytype | ? } |

| ASN.1 Type Constraint Declaration | | |
|---|---|---|
| **Constraint Name** | : | PATHTraceStatus_Q |
| **Structured Type** | : | PATHTraceStatus |
| **Derivation Path** | : | |
| **Comments** | : | |

| Constraint Value | | |
|---|---|---|
| { | Parameter_Type | ‘320E’H, |
| | Parameter_Length | ‘0008’H, |
| | PAD | PAD_2, |
| | pathindex | PATHINDEX_REF, |
| | PAD | PAD_2, |
| | ringlatencytype | ? } |

| ASN.1 Type Constraint Declaration | | |
|---|---|---|
| **Constraint Name** | : | PATHSbaPayload_Q |
| **Structured Type** | : | PATHSbaPayload |
| **Derivation Path** | : | |
| **Comments** | : | |

| Constraint Value | | |
|---|---|---|
| { | Parameter_Type | ‘320F’H, |
| | Parameter_Length | ‘0008’H, |
| | PAD | PAD_2, |
| | pathindex | PATHINDEX_REF, |
| | sbapayloadtype | ? } |


Copyright International Organization for Standardization
Provided by IHS under license with ISO
No reproduction or networking permitted without license from IHS
Not for Resale

| ASN.1 Type Constraint Declaration | | |
|---|---|---|
| **Constraint Name** | : | PATHSbaPayload_00 |
| **Structured Type** | : | PATHSbaPayload |
| **Derivation Path** | : | |
| **Comments** | : | |

| Constraint Value | | |
|---|---|---|
| { | Parameter_Type | ‘320F’H, |
| | Parameter_Length | ‘0008’H, |
| | PAD | PAD_2, |
| | pathindex | PATHINDEX_REF, |
| | sbapayloadtype | ‘00000000’H } |

| ASN.1 Type Constraint Declaration | | |
|---|---|---|
| **Constraint Name** | : | PATHSbaOverhead_Q |
| **Structured Type** | : | PATHSbaOverhead |
| **Derivation Path** | : | |
| **Comments** | : | |

| Constraint Value | | |
|---|---|---|
| { | Parameter_Type | ‘3210’H, |
| | Parameter_Length | ‘0008’H, |
| | PAD | PAD_2, |
| | pathindex | PATHINDEX_REF, |
| | sbaoverheadtype | ? } |

| ASN.1 Type Constraint Declaration | | |
|---|---|---|
| **Constraint Name** | : | PATHConfiguration_Q |
| **Structured Type** | : | PATHConfiguration |
| **Derivation Path** | : | |
| **Comments** | : | |

| Constraint Value | | |
|---|---|---|
| { | Parameter_Type | ‘3212’H, |
| | Parameter_Length | ‘0008’H, |
| | PAD | PAD_2, |
| | pathindex | PATHINDEX_REF, |
| | PAD | ?, |
| | configurationtype | CMNPathConfig_Q } |



Copyright International Organization for Standardization
Provided by IHS under license with ISO
No reproduction or networking permitted without license from IHS
Not for Resale

| ASN.1 Type Constraint Declaration | | |
|---|---|---|
| **Constraint Name** | : | PATHT_Rmode_Q |
| **Structured Type** | : | PATHT_Rmode |
| **Derivation Path** | : | |
| **Comments** | : | |

| Constraint Value | | |
|---|---|---|
| { | Parameter_Type | ‘3213’H, |
| | Parameter_Length | ‘0008’H, |
| | pathindex | PATHINDEX_REF |
| | trmodetype | ? } |

| ASN.1 Type Constraint Declaration | | |
|---|---|---|
| **Constraint Name** | : | PATHSbaAvailable_01 |
| **Structured Type** | : | PATHSbaAvailable |
| **Derivation Path** | : | |
| **Comments** | : | |

| Constraint Value | | |
|---|---|---|
| { | Parameter_Type | ‘3214’H, |
| | Parameter_Length | ‘0008’H, |
| | pathindex | PATHINDEX_REF |
| | PAD | PAD_2, |
| | sbaavailabletype | ’0’..’12500000’I } |

| ASN.1 Type Constraint Declaration | | |
|---|---|---|
| **Constraint Name** | : | PATHTVXLowerBound_01 |
| **Structured Type** | : | PATHTVXLowerBound |
| **Derivation Path** | : | |
| **Comments** | : | |

| Constraint Value | | |
|---|---|---|
| { | Parameter_Type | ‘3215’H, |
| | Parameter_Length | ‘0008’H, |
| | pathindex | PATHINDEX_REF |
| | tvxlowerboundtype | CMNTwosComplementType_Q } |


Copyright International Organization for Standardization
Provided by IHS under license with ISO
No reproduction or networking permitted without license from IHS
Not for Resale

| ASN.1 Type Constraint Declaration | | |
|---|---|---|
| **Constraint Name** | : | PATHT_MaxLowerBound_01 |
| **Structured Type** | : | PATHT_MaxLowerBound |
| **Derivation Path** | : | |
| **Comments** | : | |

| Constraint Value | | |
|---|---|---|
| { | Parameter_Type | ‘3216’H, |
| | Parameter_Length | ‘0008’H, |
| | pathindex | PATHINDEX_REF |
| | tmaxlowerboundtype | CMNTwosComplementType_Q } |

| ASN.1 Type Constraint Declaration | | |
|---|---|---|
| **Constraint Name** | : | PATHMaxT_Req_01 |
| **Structured Type** | : | PATHMaxT_Req |
| **Derivation Path** | : | |
| **Comments** | : | |

| Constraint Value | | |
|---|---|---|
| { | Parameter_Type | ‘3217’H, |
| | Parameter_Length | ‘0008’H, |
| | PAD | PAD_2, |
| | pathindex | PATHINDEX_REF, |
| | maxtreqtype | CMNTwosComplementType_Q } |

| ASN.1 Type Constraint Declaration | | |
|---|---|---|
| **Constraint Name** | : | PATHVendorAttrib_01 |
| **Structured Type** | : | PATHVendorAttrib |
| **Derivation Path** | : | |
| **Comments** | : | |

| Constraint Value | | |
|---|---|---|
| { | Parameter_Type | ‘32FF’H, |
| | Parameter_Length | ‘0008’H, |
| | PAD | PAD_2, |
| | pathindex | PATHINDEX_REF, |
| | PAD | PAD_1, |
| | vendormibtype | CMNVendorMIBType_Q} |



Copyright International Organization for Standardization
Provided by IHS under license with ISO
No reproduction or networking permitted without license from IHS
Not for Resale

#### 9.3.1.4 ASN.1 Type Constraint for PORT Attributes

##### 9.3.1.4.1 PORT Configuration Group Attributes Constraints

| ASN.1 Type Constraint Declaration | | | |
|---|---|---|---|
| **Constraint Name** | : PORTConfig_Grp_00 | | |
| **Structured Type** | : PORTConfig_Group | | |
| **Comments** | : | | |
| **Constraint Value** | | | |
| { | mytype | PORTMy_Type_Q, | |
| | neighbortype | PORTNeighborType_Q, | |
| | connectionpolicies | PORTConnectionPolicies_Q, | |
| | macindicated | PORTMACIndicated_Q, | |
| | currentpath | PORTCurrentPath_Q, | |
| | requestedpath | PORTRequestedPaths_Q, | |
| | macplacement | PORTMACPlacement_Q, | |
| | availablepath | PORTAvailablePaths_Q, | |
| | macllooptime | PORTMACLoop_Time_Q, | -- optional |
| | pmdclass | PORTPMDClass_Q, | |
| | connectioncapabilities | PORTConnectionCapabilities_Q, | |
| | index | PORTIndex_Q } | |

| ASN.1 Type Constraint Declaration | | | |
|---|---|---|---|
| **Constraint Name** | : PORTConfigGrp_PmfReq | | |
| **Structured Type** | : GroupAttribute | | |
| **Comments** | : | | |
| **Constraint Value** | | | |
| { | ParameterType | ‘400A’H, | |
| | Parameter_Length | ‘0000’H } | |

| ASN.1 Type Constraint Declaration | | | |
|---|---|---|---|
| **Constraint Name** | : PORTMy_Type_Q | | |
| **Structured Type** | : PORTMy_Type | | |
| **Derivation Path** | : | | |
| **Comments** | : | | |
| **Constraint Value** | | | |
| { | Parameter_Type | ‘400C’H, | |
| | Parameter_Length | ‘0008’H, | |
| | portindex | PORTINDEX_REF, | |
| | PAD | PAD_2, | |
| | mytype | CMNPortType_Q } | |



--`,,```,,,,````-`-`,,`,,`,`,,`---
Copyright International Organization for Standardization
Provided by IHS under license with ISO
No reproduction or networking permitted without license from IHS
Not for Resale

| ASN.1 Type Constraint Declaration | | |
|---|---|---|
| **Constraint Name** | : | PORTNeighbor_Type_Q |
| **Structured Type** | : | PORTNeighbor_Type |
| **Derivation Path** | : | |
| **Comments** | : | |

| Constraint Value | | |
|---|---|---|
| { | Parameter_Type | ‘400D’H, |
| | Parameter_Length | ‘0008’H, |
| | portindex | PORTINDEX_REF, |
| | PAD | PAD_2, |
| | neighbortype | CMNPortType_Q } |

| ASN.1 Type Constraint Declaration | | |
|---|---|---|
| **Constraint Name** | : | PORTConnectionPolicies_Q |
| **Structured Type** | : | PORTConnectionPolicies |
| **Derivation Path** | : | |
| **Comments** | : | |

| Constraint Value | | |
|---|---|---|
| { | Parameter_Type | ‘400E’H, |
| | Parameter_Length | ‘0008’H, |
| | portindex | PORTINDEX_REF, |
| | PAD | PAD_2, |
| | connectionpoliciestype | PORTConnectionPoliciesType_Q } |

| ASN.1 Type Constraint Declaration | | |
|---|---|---|
| **Constraint Name** | : | PORTMACIndicated_Q |
| **Structured Type** | : | PORTMACIndicated |
| **Derivation Path** | : | |
| **Comments** | : | |

| Constraint Value | | |
|---|---|---|
| { | Parameter_Type | ‘400F’H, |
| | Parameter_Length | ‘0008’H, |
| | portindex | PORTINDEX_REF, |
| | PAD | PAD_1, |
| | macindicatedtype | PORTMACIndicatedType_Q } |



--`,,```,,,,````-`-`,,`,,`,`,,`---
Copyright International Organization for Standardization
Provided by IHS under license with ISO
No reproduction or networking permitted without license from IHS
Not for Resale

| ASN.1 Type Constraint Declaration | | |
|---|---|---|
| **Constraint Name** | : | PORTCurrentPath_Q |
| **Structured Type** | : | PORTCurrentPath |
| **Derivation Path** | : | |
| **Comments** | : | |

**Constraint Value**

```
{   Parameter_Type          '4010'H,
    Parameter_Length        '0008'H,
    portindex               PORTINDEX_REF,
    PAD                     PAD_2,
    currentpathtype         CMNCurrentPathType_Q    }
```

| ASN.1 Type Constraint Declaration | | |
|---|---|---|
| **Constraint Name** | : | PORTRequestedPaths_Q |
| **Structured Type** | : | PORTRequestedPaths |
| **Derivation Path** | : | |
| **Comments** | : | |

**Constraint Value**

```
{   Parameter_Type          '4011'H,
    Parameter_Length        '0008'H,
    portindex               PORTINDEX_REF,
    PAD                     PAD_2,
    requestedpathstype      PORTRequestedPathsType_Q  }
```

| ASN.1 Type Constraint Declaration | | |
|---|---|---|
| **Constraint Name** | : | PORTMACPlacement_Q |
| **Structured Type** | : | PORTMACPlacement |
| **Derivation Path** | : | |
| **Comments** | : | |

**Constraint Value**

```
{   Parameter_Type          '4012'H,
    Parameter_Length        '0008'H,
    portindex               PORTINDEX_REF,
    PAD                     PAD_2,
    macplacementtype        CMNResourceIdType_Q     }
```



Copyright International Organization for Standardization
Provided by IHS under license with ISO
No reproduction or networking permitted without license from IHS
Not for Resale

| ASN.1 Type Constraint Declaration | | |
|---|---|---|
| **Constraint Name** | : | PORTAvailablePaths_Q |
| **Structured Type** | : | PORTAvailablePaths |
| **Derivation Path** | : | |
| **Comments** | : | |

| Constraint Value | | |
|---|---|---|
| { | Parameter_Type | ‘4013’H, |
| | Parameter_Length | ‘0008’H, |
| | portindex | PORTINDEX_REF, |
| | PAD | PAD_2, |
| | availablepathstype | CMNAvailablePathsType_Q } |

| ASN.1 Type Constraint Declaration | | |
|---|---|---|
| **Constraint Name** | : | PORTMACLoop_Time_Q |
| **Structured Type** | : | PORTMACLoop_Time |
| **Derivation Path** | : | |
| **Comments** | : | |

| Constraint Value | | |
|---|---|---|
| { | Parameter_Type | ‘4015’H, |
| | Parameter_Length | ‘0008’H, |
| | portindex | PORTINDEX_REF, |
| | maclooptimetype | ? } |

| ASN.1 Type Constraint Declaration | | |
|---|---|---|
| **Constraint Name** | : | PORTPMDClass_Q |
| **Structured Type** | : | PORTPMDClass |
| **Derivation Path** | : | |
| **Comments** | : | |

| Constraint Value | | |
|---|---|---|
| { | Parameter_Type | ‘4016’H, |
| | Parameter_Length | ‘0008’H, |
| | portindex | PORTINDEX_REF, |
| | PAD | PAD_2, |
| | pmdclasstype | PORTPMDClassType_Q } |

--`,,```,,,,````-`-`,,`,,`,`,,`---



Copyright International Organization for Standardization
Provided by IHS under license with ISO
No reproduction or networking permitted without license from IHS
Not for Resale

| ASN.1 Type Constraint Declaration | | | |
|---|---|---|---|
| **Constraint Name** | : PORTConnectionCapabilities_Q | | |
| **Structured Type** | : PORTConnectionCapabilities | | |
| **Derivation Path** | : | | |
| **Comments** | : | | |
| **Constraint Value** | | | |
| { | Parameter_Type | ‘4017’H, | |
| | Parameter_Length | ‘0008’H, | |
| | portindex | PORTINDEX_REF, | |
| | PAD | PAD_2, | |
| | connectioncapabilitiestype | PORTConnectionPoliciesType_Q | } |

| ASN.1 Type Constraint Declaration | | | |
|---|---|---|---|
| **Constraint Name** | : PORTIndex_Q | | |
| **Structured Type** | : PORTIndex | | |
| **Derivation Path** | : | | |
| **Comments** | : | | |
| **Constraint Value** | | | |
| { | Parameter_Type | ‘401D’H, | |
| | Parameter_Length | ‘0008’H, | |
| | portindex | PORTINDEX_REF, | |
| | PAD | PAD_2, | |
| | portindextype | CMNResourceId_Q | } |

#### 9.3.1.4.2 PORT Operation Group Attributes Constraints

| ASN.1 Type Constraint Declaration | | | | |
|---|---|---|---|---|
| **Constraint Name** | : PORTOperation_Grp_00 | | | |
| **Structured Type** | : PORTOperation_Group | | | |
| **Comments** | : | | | |
| **Constraint Value** | | | | |
| { | maintls | PORTMaint_LS_Q, | -- optional | |
| | bsflag | PORTBS_Flag_Q, | | |
| | pcls | PORTPC_LS_Q | -- optional when HP | } |


Copyright International Organization for Standardization
Provided by IHS under license with ISO
No reproduction or networking permitted without license from IHS
Not for Resale

| ASN.1 Type Constraint Declaration | | |
|---|---|---|
| **Constraint Name** | : | PORTOperationGrp_PmfReq |
| **Structured Type** | : | GroupAttribute |
| **Comments** | : | |

| Constraint Value | | |
|---|---|---|
| { | ParameterType | ‘401E’H, |
| | Parameter_Length | ‘0000’H } |

| ASN.1 Type Constraint Declaration | | |
|---|---|---|
| **Constraint Name** | : | PORTMaint_LS_Q |
| **Structured Type** | : | PORTMaint_LS |
| **Derivation Path** | : | |
| **Comments** | : | |

| Constraint Value | | |
|---|---|---|
| { | Parameter_Type | ‘401F’H, |
| | Parameter_Length | ‘0008’H, |
| | portindex | PORTINDEX_REF, |
| | PAD | PAD_2, |
| | maintlstype | PORTLineStateType_?? } |

| ASN.1 Type Constraint Declaration | | |
|---|---|---|
| **Constraint Name** | : | PORTBS_Flag_Q |
| **Structured Type** | : | PORTBS_Flag |
| **Derivation Path** | : | |
| **Comments** | : | |

| Constraint Value | | |
|---|---|---|
| { | Parameter_Type | ‘4021’H, |
| | Parameter_Length | ‘0008’H, |
| | portindex | PORTINDEX_REF, |
| | PAD | PAD_2, |
| | bsflagtype | FALSE } |



Copyright International Organization for Standardization
Provided by IHS under license with ISO
No reproduction or networking permitted without license from IHS
Not for Resale

| ASN.1 Type Constraint Declaration | |
|---|---|
| **Constraint Name** | : PORTPC_LS_Q |
| **Structured Type** | : PORTPC_LS |
| **Derivation Path** | : |
| **Comments** | : |

**Constraint Value**

```
{       Parameter_Type          ‘4022’H,
        Parameter_Length        ‘0008’H,
        portindex               PORTINDEX_REF,
        PAD                     PAD_2,
        pclstype                PORTLIneStateType_??        }
```

#### 9.3.1.4.3 PORT Error Counters Group Attributes Constraints

| ASN.1 Type Constraint Declaration | |
|---|---|
| **Constraint Name** | : PORTErrorCtrs_Grp_00 |
| **Structured Type** | : PORTErrorCtrs_Group |
| **Comments** | : |

**Constraint Value**

```
{       eberrorct       PORTEBError_Ct_Q,        -- optional when HP
        lctfailct       PORTLCTFail_Ct_Q    }
```

| ASN.1 Type Constraint Declaration | |
|---|---|
| **Constraint Name** | : PORTErrorCtrsGrp_PmfReq |
| **Structured Type** | : GroupAttribute |
| **Comments** | : |

**Constraint Value**

```
{       ParameterType           ‘4028’H,
        Parameter_Length        ‘0000’H         }
```

| ASN.1 Type Constraint Declaration | |
|---|---|
| **Constraint Name** | : PORTEBError_Ct_Q |
| **Structured Type** | : PORTEBError_Ct |
| **Derivation Path** | : |
| **Comments** | : |

**Constraint Value**

```
{       Parameter_Type          ‘4029’H,
        Parameter_Length        ‘0008’H,
        portindex               PORTINDEX_REF,
        eberrorcttype           ?       }
```


Copyright International Organization for Standardization
Provided by IHS under license with ISO
No reproduction or networking permitted without license from IHS
Not for Resale

| ASN.1 Type Constraint Declaration | |
|---|---|
| **Constraint Name** | : PORTLCTFail_Ct_Q |
| **Structured Type** | : PORTLCTFail_Ct |
| **Derivation Path** | : |
| **Comments** | : |
| **Constraint Value** | |
| { Parameter_Type | ‘402A’H, |
| Parameter_Length | ‘0008’H, |
| portindex | PORTINDEX_REF, |
| lctfailcttype | ? } |

#### 9.3.1.4.4 PORT LER Group Attributes Constraints

| ASN.1 Type Constraint Declaration | |
|---|---|
| **Constraint Name** | : PORTLer_Grp_00 |
| **Structured Type** | : PORTLer_Group |
| **Comments** | : |
| **Constraint Value** | |
| { lerestimate | PORTLer_Estimate_Q, |
| lemrejectct | PORTLem_Reject_Ct_Q, |
| lemct | PORTLem_Ct_Q, |
| lercutoff | PORTLer_Cutoff_Q, |
| leralarm | PORTLer_Alarm_Q } |

| ASN.1 Type Constraint Declaration | |
|---|---|
| **Constraint Name** | : PORTLerGrp_PmfReq |
| **Structured Type** | : GroupAttribute |
| **Comments** | : |
| **Constraint Value** | |
| { ParameterType | ‘4032’H, |
| Parameter_Length | ‘0000’H } |



Copyright International Organization for Standardization
Provided by IHS under license with ISO
No reproduction or networking permitted without license from IHS
Not for Resale

| ASN.1 Type Constraint Declaration | | |
|---|---|---|
| **Constraint Name** | : | PORTLer_Estimate_Q |
| **Structured Type** | : | PORTLer_Estimate |
| **Derivation Path** | : | |
| **Comments** | : | |

| Constraint Value | | |
|---|---|---|
| { | Parameter_Type | ‘4033’H, |
| | Parameter_Length | ‘0008’H, |
| | portindex | PORTINDEX_REF, |
| | PAD | PAD_1, |
| | lerestimatetype | ? } |

| ASN.1 Type Constraint Declaration | | |
|---|---|---|
| **Constraint Name** | : | PORTLem_Reject_Ct_Q |
| **Structured Type** | : | PORTLem_Reject_Ct |
| **Derivation Path** | : | |
| **Comments** | : | |

| Constraint Value | | |
|---|---|---|
| { | Parameter_Type | ‘4034’H, |
| | Parameter_Length | ‘0008’H, |
| | portindex | PORTINDEX_REF, |
| | lemrejectcttype | ? } |

| ASN.1 Type Constraint Declaration | | |
|---|---|---|
| **Constraint Name** | : | PORTLem_Ct_Q |
| **Structured Type** | : | PORTLem_Ct |
| **Derivation Path** | : | |
| **Comments** | : | |

| Constraint Value | | |
|---|---|---|
| { | Parameter_Type | ‘4035’H, |
| | Parameter_Length | ‘0008’H, |
| | portindex | PORTINDEX_REF, |
| | lemcttype | ? } |

--`,,```,,,,````-`-`,,`,,`,`,,`---



Copyright International Organization for Standardization
Provided by IHS under license with ISO
No reproduction or networking permitted without license from IHS
Not for Resale

| ASN.1 Type Constraint Declaration | | |
|---|---|---|
| **Constraint Name** | **:** | PORTLer_Cutoff_Q |
| **Structured Type** | **:** | PORTLer_Cutoff |
| **Derivation Path** | **:** | |
| **Comments** | **:** | |

| Constraint Value | | |
|---|---|---|
| { | Parameter_Type | ‘403A’H, |
| | Parameter_Length | ‘0008’H, |
| | portindex | PORTINDEX_REF, |
| | PAD | PAD_1, |
| | lercutofftype | ? } |

| ASN.1 Type Constraint Declaration | | |
|---|---|---|
| **Constraint Name** | **:** | PORTLer_Alarm_Q |
| **Structured Type** | **:** | PORTLer_Alarm |
| **Derivation Path** | **:** | |
| **Comments** | **:** | |

| Constraint Value | | |
|---|---|---|
| { | Parameter_Type | ‘403B’H, |
| | Parameter_Length | ‘0008’H, |
| | portindex | PORTINDEX_REF, |
| | PAD | PAD_1, |
| | leralarmtype | ? } |

#### 9.3.1.4.5 PORT Status Group Attributes Constraints

| ASN.1 Type Constraint Declaration | | |
|---|---|---|
| **Constraint Name** | **:** | PORTStatus_Grp_00 |
| **Structured Type** | **:** | PORTStatus_Group |
| **Comments** | **:** | |

| Constraint Value | | |
|---|---|---|
| { | connectionstate | PORTConnectState_01, |
| | pcmstate | PORTPCMState_01, |
| | pcwithhold | PORTPC_Withhold_01, |
| | lerflag | PORTLerFlag_01, |
| | hardwarepresent | PORTHardwarePresent_01 } |

--`,,```,,,,````-`-`,,`,,`,`,,`---



Copyright International Organization for Standardization
Provided by IHS under license with ISO
No reproduction or networking permitted without license from IHS
Not for Resale

| ASN.1 Type Constraint Declaration | | |
|---|---|---|
| **Constraint Name** | : | PORTStatusGrp_PmfReq |
| **Structured Type** | : | GroupAttribute |
| **Comments** | : | |

| Constraint Value | | |
|---|---|---|
| { | ParameterType | ‘403C’H, |
| | Parameter_Length | ‘0000’H } |

| ASN.1 Type Constraint Declaration | | |
|---|---|---|
| **Constraint Name** | : | PORTConnectState_01 |
| **Structured Type** | : | PORTConnectState |
| **Derivation Path** | : | |
| **Comments** | : | |

| Constraint Value | | |
|---|---|---|
| { | Parameter_Type | ‘403D’H, |
| | Parameter_Length | ‘0008’H, |
| | portindex | PORTINDEX_REF, |
| | PAD | PAD_2, |
| | connectstatetype | PORTConnectStateType_Q } |

| ASN.1 Type Constraint Declaration | | |
|---|---|---|
| **Constraint Name** | : | PORTPCMState_01 |
| **Structured Type** | : | PORTPCMState |
| **Derivation Path** | : | |
| **Comments** | : | |

| Constraint Value | | |
|---|---|---|
| { | Parameter_Type | ‘403E’H, |
| | Parameter_Length | ‘0008’H, |
| | portindex | PORTINDEX_REF, |
| | PAD | PAD_2, |
| | pcmstatetype | PCMState } |


Copyright International Organization for Standardization
Provided by IHS under license with ISO
No reproduction or networking permitted without license from IHS Not for Resale

| ASN.1 Type Constraint Declaration | | |
|---|---|---|
| **Constraint Name** | : | PORTPC_Withhold_01 |
| **Structured Type** | : | PORTPC_Withhold |
| **Derivation Path** | : | |
| **Comments** | : | |

| Constraint Value | | |
|---|---|---|
| { | Parameter_Type | ‘403F’H, |
| | Parameter_Length | ‘0008’H, |
| | portindex | PORTINDEX_REF, |
| | PAD | PAD_2, |
| | pcwithholdtype | PORTPC_WithholdType_Q } |

| ASN.1 Type Constraint Declaration | | |
|---|---|---|
| **Constraint Name** | : | PORTLerFlag_01 |
| **Structured Type** | : | PORTLerFlag |
| **Derivation Path** | : | |
| **Comments** | : | |

| Constraint Value | | |
|---|---|---|
| { | Parameter_Type | ‘4040’H, |
| | Parameter_Length | ‘0008’H, |
| | portindex | PORTINDEX_REF, |
| | PAD | PAD_2, |
| | lerflagtype | FALSE } |

| ASN.1 Type Constraint Declaration | | |
|---|---|---|
| **Constraint Name** | : | PORTHardwarePresent_01 |
| **Structured Type** | : | PORTHardwarePresent |
| **Derivation Path** | : | |
| **Comments** | : | |

| Constraint Value | | |
|---|---|---|
| { | Parameter_Type | ‘4041’H, |
| | Parameter_Length | ‘0008’H, |
| | portindex | PORTINDEX_REF, |
| | PAD | PAD_2, |
| | presenttype | CMNPresent_01 } |



Copyright International Organization for Standardization
Provided by IHS under license with ISO
No reproduction or networking permitted without license from IHS
Not for Resale

| ASN.1 Type Constraint Declaration | | |
|---|---|---|
| **Constraint Name** | : PORTVendorAttrib_01 | |
| **Structured Type** | : PORTVendorAttrib | |
| **Derivation Path** | : | |
| **Comments** | : | |
| **Constraint Value** | | |
| { | Parameter_Type | ‘40FF’H, |
| | Parameter_Length | ‘0008’H, |
| | portindex | PORTINDEX_REF, |
| | PAD | PAD_2, |
| | vendormibtype | CMNVendorMIBType_Q} |

### 9.3.1.5 ASN.1 Type Constraint for SMT Actions and Notifications

#### 9.3.1.5.1 Actions

| ASN.1 Type Constraint Declaration | | |
|---|---|---|
| **Constraint Name** | : PORTAction_01 | |
| **Structured Type** | : PORTAction | |
| **Derivation Path** | : | |
| **Comments** | : | |
| **Constraint Value** | | |
| { | Parameter_Type | ‘4046’H, |
| | Parameter_Length | ‘0008’H, |
| | portindex | PORTINDEX_REF, |
| | PAD | PAD_2, |
| | actioninfo | PORTActionType_Q } |

| ASN.1 Type Constraint Declaration | | |
|---|---|---|
| **Constraint Name** | : PORTVendorAction_01 | |
| **Structured Type** | : PORTVendorAction | |
| **Derivation Path** | : | |
| **Comments** | : | |
| **Constraint Value** | | |
| { | Parameter_Type | ‘40FE’H, |
| | Parameter_Length | ‘0008’H, |
| | portindex | PORTINDEX_REF, |
| | PAD | PAD_2, |
| | vendormibtype | CMNVendorMIBType_Q} |



Copyright International Organization for Standardization
Provided by IHS under license with ISO
No reproduction or networking permitted without license from IHS
Not for Resale

#### 9.3.1.5.2 Notifications

| ASN.1 Type Constraint Declaration | | |
|---|---|---|
| **Constraint Name** | : | SMTHoldCondition_01 |
| **Structured Type** | : | SMTHoldCondition |
| **Derivation Path** | : | |
| **Comments** | : | |

| Type Definition | | |
|---|---|---|
| { | Parameter_Type | '1047'H, |
| | Parameter_Length | ?, |
| | PAD | PAD_2, |
| | holdconditiontype | SMTHoldConditionDataType_Q } |

| ASN.1 Type Constraint Declaration | | |
|---|---|---|
| **Constraint Name** | : | SMTPeerWrapCondition_01 |
| **Structured Type** | : | SMTPeerWrapCondition |
| **Derivation Path** | : | |
| **Comments** | : | |

| Type Definition | | |
|---|---|---|
| { | Parameter_Type | '1048'H, |
| | Parameter_Length | ?, |
| | PAD | PAD_2, |
| | conditionstate | FALSE |
| | peerwrapcondition | SMTCF_StateType_Q } |

| ASN.1 Type Constraint Declaration | | |
|---|---|---|
| **Constraint Name** | : | SMTVendorNotification_01 |
| **Structured Type** | : | SMTVendorNotification |
| **Derivation Path** | : | |
| **Comments** | : | |

| Type Definition | | |
|---|---|---|
| { | Parameter_Type | '10FC'H, |
| | Parameter_Length | ?, |
| | PAD | PAD_2, |
| | vendormibtype | CMNVendorMIBType_Q} |



Copyright International Organization for Standardization
Provided by IHS under license with ISO
No reproduction or networking permitted without license from IHS
Not for Resale

| ASN.1 Type Constraint Declaration | | |
|---|---|---|
| **Constraint Name** | : | MACDuplicateAddressCondition_01 |
| **Structured Type** | : | MACDuplicateAddressCondition |
| **Derivation Path** | : | |
| **Comments** | : | |

**Type Definition**

```
{   Parameter_Type          ‘208C’H,
    Parameter_Length        ?,
    macindex                MACINDEX_REF,
    PAD                     PAD_2,
    conditionstate          FALSE,
    duplicateaddresstype    DuplicateAddressType_Q      }
```

| ASN.1 Type Constraint Declaration | | |
|---|---|---|
| **Constraint Name** | : | MACFrameErrorCondition_01 |
| **Structured Type** | : | MACFrameErrorCondition |
| **Derivation Path** | : | |
| **Comments** | : | |

**Type Definition**

```
{   Parameter_Type          ‘208D’H,
    Parameter_Length        ‘0018’H,
    PAD                     PAD_2,
    macindex                MACINDEX_REF,
    PAD                     PAD_3,
    conditionstate          FALSE,
    framect                 CMNCounter_Q,
    errorct                 CMNCounter_Q,
    lostct                  CMNCounter_Q,
    PAD                     PAD_2,
    frameerrorratio         FrameErrorRatioType_Q       }
```

| ASN.1 Type Constraint Declaration | | |
|---|---|---|
| **Constraint Name** | : | MACNotCopiedCondition_01 |
| **Structured Type** | : | MACNotCopiedCondition |
| **Derivation Path** | : | |
| **Comments** | : | |

**Type Definition**

```
{   Parameter_Type          ‘208E’H,
    Parameter_Length        ?,
    macindex                MACINDEX_REF,
    PAD                     PAD_2,
    conditionstate          FALSE,
    notcopiedct             CMNCounter_Q,
    copiedct                CMNCounter_Q,
    notcpoiedratio          NotCopiedRatioType_Q        }
```


Copyright International Organization for Standardization
Provided by IHS under license with ISO
No reproduction or networking permitted without license from IHS
Not for Resale

| ASN.1 Type Constraint Declaration | | |
|---|---|---|
| **Constraint Name** | : | MACNeighborChangeEvent_01 |
| **Structured Type** | : | MACNeighborChangeEvent |
| **Derivation Path** | : | |
| **Comments** | : | |

**Type Definition**

```
{       Parameter_Type          '208F'H,
        Parameter_Length        ?,
        macindex                MACINDEX_REF,
        PAD                     PAD_2,
        multipleoccurrence      FALSE,
        neighborchangetype      NeighborChangeType_Q    }
```

| ASN.1 Type Constraint Declaration | | |
|---|---|---|
| **Constraint Name** | : | MACPathChangeEvent_01 |
| **Structured Type** | : | MACPathChangeEvent |
| **Derivation Path** | : | |
| **Comments** | : | |

**Type Definition**

```
{       Parameter_Type          '2090'H,
        Parameter_Length        ?,
        macindex                MACINDEX_REF,
        PAD                     PAD_2,
        pathchangedatatype      PathChangeDataType_01   }
```

| ASN.1 Type Constraint Declaration | | |
|---|---|---|
| **Constraint Name** | : | PathChangeDataType_Q |
| **Structured Type** | : | PathChangeDataType |
| **Derivation Path** | : | |
| **Comments** | : | |

**Type Definition**

```
{       multipleoccurrence      FLASE,
        pathchangetype      PathChangeType_Q    }
```



Copyright International Organization for Standardization
Provided by IHS under license with ISO
No reproduction or networking permitted without license from IHS
Not for Resale

| ASN.1 Type Constraint Declaration | | |
|---|---|---|
| **Constraint Name** | : | PathChangeType_Q |
| **Structured Type** | : | PathChangeType |
| **Derivation Path** | : | |
| **Comments** | : | |

| Type Definition | | |
|---|---|---|
| { | availablepaths | CMNAvailablePathsType_o?, |
| | currentpath | CMNCurrentPathType_o?, |
| | requestedpaths | CMNPermittedPathsType_Q } |

| ASN.1 Type Constraint Declaration | | |
|---|---|---|
| **Constraint Name** | : | MACVendorNotification_01 |
| **Structured Type** | : | MACVendorNotification |
| **Derivation Path** | : | |
| **Comments** | : | |

| Type Definition | | |
|---|---|---|
| { | Parameter_Type | ‘20FC’H, |
| | Parameter_Length | ?, |
| | macindex | MACINDEX_REF, |
| | PAD | PAD_2, |
| | vendornotification | CMNVendorMIBType_Q} |

| ASN.1 Type Constraint Declaration | | |
|---|---|---|
| **Constraint Name** | : | PATHVendorNotification_01 |
| **Structured Type** | : | PATHVendorNotification |
| **Derivation Path** | : | |
| **Comments** | : | |

| Type Definition | | |
|---|---|---|
| { | Parameter_Type | ‘32FC’H, |
| | Parameter_Length | ?, |
| | pathindex | PATHINDEX_REF, |
| | PAD | PAD_2, |
| | vendornotification | CMNVendorMIBType_Q} |


Copyright International Organization for Standardization
Provided by IHS under license with ISO
No reproduction or networking permitted without license from IHS
Not for Resale

| ASN.1 Type Constraint Declaration | | |
|---|---|---|
| **Constraint Name** | : | PORTLerCondition_01 |
| **Structured Type** | : | PORTLerCondition |
| **Derivation Path** | : | |
| **Comments** | : | |

| Constraint Value | | |
|---|---|---|
| { | Parameter_Type | ‘4050’H, |
| | Parameter_Length | ‘0008’H, |
| | portindex | PORTINDEX_REF, |
| | PAD | PAD_2, |
| | conditionstate | FALSE, |
| | lertype | PORTLerType_Q } |

| ASN.1 Type Constraint Declaration | | |
|---|---|---|
| **Constraint Name** | : | PORTLerType_Q |
| **Structured Type** | : | PORTLerType |
| **Derivation Path** | : | |
| **Comments** | : | |

| Constraint Value | | |
|---|---|---|
| { | lercutoff | LerExponentType_Q, |
| | leralarm | LerExponentType_Q, |
| | lerestimate | LerExponentType_Q, |
| | lerrecectct | CMNCounter_Q, |
| | lerct | CMNCounter_Q} |

| ASN.1 Type Constraint Declaration | | |
|---|---|---|
| **Constraint Name** | : | PORTUndesiredConnectionAttemptEvent_01 |
| **Structured Type** | : | PORTUndesiredConnectionAttemptEvent |
| **Derivation Path** | : | |
| **Comments** | : | |

| Constraint Value | | |
|---|---|---|
| { | Parameter_Type | ‘4051’H, |
| | Parameter_Length | ‘0008’H, |
| | portindex | PORTINDEX_REF, |
| | PAD | PAD_2, |
| | multipleoccurrence | FALSE, |
| | undesiredconndectiontype | UndesiredConnectionType_Q } |

--`,,```,,,,````-`-`,,`,,`,`,,`---



Copyright International Organization for Standardization
Provided by IHS under license with ISO
No reproduction or networking permitted without license from IHS
Not for Resale

| ASN.1 Type Constraint Declaration | | |
|---|---|---|
| **Constraint Name** | : | UndesiredConnectionType_Q |
| **Structured Type** | : | UndesiredConnectionType |
| **Derivation Path** | : | |
| **Comments** | : | |

| Constraint Value | | |
|---|---|---|
| { | porttype | CMNPortType_Q, |
| | connectstate | PORTConnectStateType_Q, |
| | pcneighbor | CMNPortType_Q |
| | pcwithhold | PORTPC_Withhold_Q } |

| ASN.1 Type Constraint Declaration | | |
|---|---|---|
| **Constraint Name** | : | PORTEBErrorCondition_01 |
| **Structured Type** | : | PORTEBErrorCondition |
| **Derivation Path** | : | |
| **Comments** | : | |

| Constraint Value | | |
|---|---|---|
| { | Parameter_Type | ‘4052’H, |
| | Parameter_Length | ‘0008’H, |
| | portindex | PORTINDEX_REF, |
| | PAD | PAD_2, |
| | conditionstate | FALSE, |
| | eberrorcount | CMNCounter_Q} |

| ASN.1 Type Constraint Declaration | | |
|---|---|---|
| **Constraint Name** | : | PORTPathChangeEvent_01 |
| **Structured Type** | : | PORTPathChangeEvent |
| **Derivation Path** | : | |
| **Comments** | : | |

| Constraint Value | | |
|---|---|---|
| { | Parameter_Type | ‘4053’H, |
| | Parameter_Length | ‘0008’H, |
| | portindex | PORTINDEX_REF, |
| | PAD | PAD_2, |
| | pathchangedatatype | PathChangeDataType_01, } |


Copyright International Organization for Standardization
Provided by IHS under license with ISO
No reproduction or networking permitted without license from IHS
Not for Resale

| ASN.1 Type Constraint Declaration | | |
|---|---|---|
| **Constraint Name** | : | PORTVendorNotification_01 |
| **Structured Type** | : | PORTVendorNotification |
| **Derivation Path** | : | |
| **Comments** | : | |

| Constraint Value | | |
|---|---|---|
| { | Parameter_Type | ‘40FC’H, |
| | Parameter_Length | ‘0008’H, |
| | portindex | PORTINDEX_REF, |
| | PAD | PAD_2, |
| | vendormibtype | CMNVendorMIBType_Q} |

### 9.3.1.6 ASN.1 Type Constraint for Definitions

**Common Definitions**

| ASN.1 Type Constraint Declaration | | |
|---|---|---|
| **Constraint Name** | : | CMNAvailablePathsType_Q |
| **Structured Type** | : | CMNAvailablePathsType |
| **Derivation Path** | : | |
| **Comments** | : | |

| Type Definition |
|---|
| ‘00000???’B |

| ASN.1 Type Constraint Declaration | | |
|---|---|---|
| **Constraint Name** | : | CMNAvailablePathsType_00 |
| **Structured Type** | : | CMNAvailablePathsType |
| **Derivation Path** | : | |
| **Comments** | : | |

| Type Definition | |
|---|---|
| ‘00000001’B | -- primary |

| ASN.1 Type Constraint Declaration | | |
|---|---|---|
| **Constraint Name** | : | CMNAvailablePathsType_01 |
| **Structured Type** | : | CMNAvailablePathsType |
| **Derivation Path** | : | |
| **Comments** | : | |

| Type Definition | |
|---|---|
| ‘00000010’B | -- secondary |



--`,,```,,,,````-`-`,,`,,`,`,,`---
Copyright International Organization for Standardization
Provided by IHS under license with ISO
No reproduction or networking permitted without license from IHS
Not for Resale

| ASN.1 Type Constraint Declaration | |
|---|---|
| **Constraint Name** | : CMNAvailablePathsType_02 |
| **Structured Type** | : CMNAvailablePathsType |
| **Derivation Path** | : |
| **Comments** | : |
| **Type Definition** | |
| '00000100'B -- local | |

| ASN.1 Type Constraint Declaration | |
|---|---|
| **Constraint Name** | : CMNCounter_Q |
| **Structured Type** | : CMNCounter |
| **Derivation Path** | : |
| **Comments** | : |
| **Type Definition** | |
| ? | |

| ASN.1 Type Constraint Declaration | |
|---|---|
| **Constraint Name** | : CMNCurrentPathType_Q |
| **Structured Type** | : CMNCurrentPathType |
| **Derivation Path** | : |
| **Comments** | : |
| **Type Definition** | |
| ? | |

| ASN.1 Type Constraint Declaration | |
|---|---|
| **Constraint Name** | : CMNCurrentPathType_00 |
| **Structured Type** | : CMNCurrentPathType |
| **Derivation Path** | : |
| **Comments** | : |
| **Type Definition** | |
| '0000'I -- isolated | |


Copyright International Organization for Standardization
Provided by IHS under license with ISO
No reproduction or networking permitted without license from IHS Not for Resale

| ASN.1 Type Constraint Declaration | |
|---|---|
| **Constraint Name** | : CMNCurrentPathType_01 |
| **Structured Type** | : CMNCurrentPathType |
| **Derivation Path** | : |
| **Comments** | : |
| **Type Definition** | |
| '0001'I -- local | |

| ASN.1 Type Constraint Declaration | |
|---|---|
| **Constraint Name** | : CMNCurrentPathType_02 |
| **Structured Type** | : CMNCurrentPathType |
| **Derivation Path** | : |
| **Comments** | : |
| **Type Definition** | |
| '0002'I -- secondary | |

| ASN.1 Type Constraint Declaration | |
|---|---|
| **Constraint Name** | : CMNCurrentPathType_03 |
| **Structured Type** | : CMNCurrentPathType |
| **Derivation Path** | : |
| **Comments** | : |
| **Type Definition** | |
| '0003'I -- primary | |

| ASN.1 Type Constraint Declaration | |
|---|---|
| **Constraint Name** | : CMNCurrentPathType_04 |
| **Structured Type** | : CMNCurrentPathType |
| **Derivation Path** | : |
| **Comments** | : |
| **Type Definition** | |
| '0004'I -- concatenated | |

--`,,```,,,,````-`-`,,`,,`,`,,`---



Copyright International Organization for Standardization
Provided by IHS under license with ISO
No reproduction or networking permitted without license from IHS
Not for Resale

| ASN.1 Type Constraint Declaration | |
|---|---|
| **Constraint Name** | : CMNCurrentPathType_05 |
| **Structured Type** | : CMNCurrentPathType |
| **Derivation Path** | : |
| **Comments** | : |
| **Type Definition** | |
| '0005'I -- thru | |

| ASN.1 Type Constraint Declaration | |
|---|---|
| **Constraint Name** | : CMNFlag_Q |
| **Structured Type** | : CMNFlag |
| **Derivation Path** | : |
| **Comments** | : |
| **Type Definition** | |
| ? | |

| ASN.1 Type Constraint Declaration | |
|---|---|
| **Constraint Name** | : CMNFlag_00 |
| **Structured Type** | : CMNFlag |
| **Derivation Path** | : |
| **Comments** | : |
| **Type Definition** | |
| '00000001'B | -- false |

| ASN.1 Type Constraint Declaration | |
|---|---|
| **Constraint Name** | : CMNFlag_01 |
| **Structured Type** | : CMNFlag |
| **Derivation Path** | : |
| **Comments** | : |
| **Type Definition** | |
| '00000010'B | -- true |


Copyright International Organization for Standardization
Provided by IHS under license with ISO
No reproduction or networking permitted without license from IHS
Not for Resale

| ASN.1 Type Constraint Declaration | |
|---|---|
| **Constraint Name** | : CMNLongAddressType_Q |
| **Structured Type** | : CMNLongAddressType |
| **Derivation Path** | : |
| **Comments** | : |
| **Type Definition** | |
| ? | |

| ASN.1 Type Constraint Declaration | |
|---|---|
| **Constraint Name** | : CMNPermittedPathsType_Q |
| **Structured Type** | : CMNPermittedPathsType |
| **Derivation Path** | : |
| **Comments** | : |
| **Constraint Value** | |
| ? | |

| ASN.1 Type Constraint Declaration | |
|---|---|
| **Constraint Name** | : CMNPortType_Q |
| **Structured Type** | : CMNPortType |
| **Derivation Path** | : |
| **Comments** | : |
| **Type Definition** | |
| ? | |

| ASN.1 Type Constraint Declaration | |
|---|---|
| **Constraint Name** | : CMNPortType_00 |
| **Structured Type** | : CMNPortType |
| **Derivation Path** | : |
| **Comments** | : |
| **Type Definition** | |
| '0000'I -- A port | |

--`,,```,,,,````-`-`,,`,,`,`,,`---



Copyright International Organization for Standardization
Provided by IHS under license with ISO
No reproduction or networking permitted without license from IHS
Not for Resale

| ASN.1 Type Constraint Declaration | |
|---|---|
| **Constraint Name** | : CMNPortType_01 |
| **Structured Type** | : CMNPortType |
| **Derivation Path** | : |
| **Comments** | : |
| **Type Definition** | |
| '0001'I -- B port | |

| ASN.1 Type Constraint Declaration | |
|---|---|
| **Constraint Name** | : CMNPortType_02 |
| **Structured Type** | : CMNPortType |
| **Derivation Path** | : |
| **Comments** | : |
| **Type Definition** | |
| '0002'I -- S port | |

| ASN.1 Type Constraint Declaration | |
|---|---|
| **Constraint Name** | : CMNPortType_03 |
| **Structured Type** | : CMNPortType |
| **Derivation Path** | : |
| **Comments** | : |
| **Type Definition** | |
| '0003'I -- M port | |

| ASN.1 Type Constraint Declaration | |
|---|---|
| **Constraint Name** | : CMNPortType_04 |
| **Structured Type** | : CMNPortType |
| **Derivation Path** | : |
| **Comments** | : |
| **Type Definition** | |
| '0004'I -- none | |


Copyright International Organization for Standardization
Provided by IHS under license with ISO
No reproduction or networking permitted without license from IHS
Not for Resale

| ASN.1 Type Constraint Declaration | |
|---|---|
| **Constraint Name** | : CMNPresent_Q |
| **Structured Type** | : CMNPresent |
| **Derivation Path** | : |
| **Comments** | : |
| **Type Definition** | |
| ? | |

| ASN.1 Type Constraint Declaration | |
|---|---|
| **Constraint Name** | : CMNPresent_00 |
| **Structured Type** | : CMNPresent |
| **Derivation Path** | : |
| **Comments** | : |
| **Type Definition** | |
| '0000'I -- notpresent | |

| ASN.1 Type Constraint Declaration | |
|---|---|
| **Constraint Name** | : CMNPresent_01 |
| **Structured Type** | : CMNPresent |
| **Derivation Path** | : |
| **Comments** | : |
| **Type Definition** | |
| '0001'I -- present | |

| ASN.1 Type Constraint Declaration | |
|---|---|
| **Constraint Name** | : CMNResourceId_Q |
| **Structured Type** | : CMNResourceId |
| **Derivation Path** | : |
| **Comments** | : |
| **Type Definition** | |
| ? | |



--`,,```,,,,````-`-`,,`,,`,`,,`---
Copyright International Organization for Standardization
Provided by IHS under license with ISO
No reproduction or networking permitted without license from IHS
Not for Resale

| ASN.1 Type Constraint Declaration | |
|---|---|
| **Constraint Name** | : CMNResourceTagType_Q |
| **Structured Type** | : CMNResourceTagType |
| **Derivation Path** | : |
| **Comments** | : |

**Type Definition**

```
{resourcetype       CMNResourceType_Q,
 resource_index     CMNResourceId_Q,
 current_port       CMNCurrentPathType_Q      }
```

| ASN.1 Type Constraint Declaration | |
|---|---|
| **Constraint Name** | : CMNResourceType_Q |
| **Structured Type** | : CMNResourceType |
| **Derivation Path** | : |
| **Comments** | : |

**Type Definition**

```
?
```

| ASN.1 Type Constraint Declaration | |
|---|---|
| **Constraint Name** | : CMNResourceType_02 |
| **Structured Type** | : CMNResourceType |
| **Derivation Path** | : |
| **Comments** | : |

**Type Definition**

```
'0002'I  -- mac
```


Copyright International Organization for Standardization
Provided by IHS under license with ISO
No reproduction or networking permitted without license from IHS
Not for Resale

| ASN.1 Type Constraint Declaration | |
|---|---|
| **Constraint Name** | : CMNResourceType_04 |
| **Structured Type** | : CMNResourceType |
| **Derivation Path** | : |
| **Comments** | : |
| **Type Definition** | |
| '0004'I -- port | |

| ASN.1 Type Constraint Declaration | |
|---|---|
| **Constraint Name** | : CMNTime_Q |
| **Structured Type** | : CMNTime |
| **Derivation Path** | : |
| **Comments** | : |
| **Type Definition** | |
| ? | |

| ASN.1 Type Constraint Declaration | |
|---|---|
| **Constraint Name** | : CMNTwosComplementType_Q |
| **Structured Type** | : CMNTwosComplementType |
| **Derivation Path** | : |
| **Comments** | : |
| **Type Definition** | |
| ? | |

| ASN.1 Type Constraint Declaration | |
|---|---|
| **Constraint Name** | : SMTTimeStampType_Q |
| **Structured Type** | : SMTTimeStampType |
| **Derivation Path** | : |
| **Comments** | : |
| **Type Definition** | |
| ? | |



Copyright International Organization for Standardization
Provided by IHS under license with ISO
No reproduction or networking permitted without license from IHS
Not for Resale

| ASN.1 Type Constraint Declaration | |
|---|---|
| **Constraint Name** | : CMNVendorMIBType_Q |
| **Structured Type** | : CMNVendorMIBType |
| **Derivation Path** | : |
| **Comments** | : |
| **Type Definition** | |
| { manufactureroui ?,<br>vendoroctet ?,<br>specificdata ANY } | |

## SMT Definitions

| ASN.1 Type Constraint Declaration | |
|---|---|
| **Constraint Name** | : SMTActionInfoType_Q |
| **Structured Type** | : SMTActionInfoType |
| **Derivation Path** | : |
| **Comments** | : |
| **Type Definition** | |
| ? | |

| ASN.1 Type Constraint Declaration | |
|---|---|
| **Constraint Name** | : SMTActionInfoType_00 |
| **Structured Type** | : SMTActionInfoType |
| **Derivation Path** | : |
| **Comments** | : |
| **Type Definition** | |
| ‘0000’I | -- connect |

| ASN.1 Type Constraint Declaration | |
|---|---|
| **Constraint Name** | : SMTActionInfoType_01 |
| **Structured Type** | : SMTActionInfoType |
| **Derivation Path** | : |
| **Comments** | : |
| **Type Definition** | |
| ‘0001’I | -- disconnect |


Copyright International Organization for Standardization
Provided by IHS under license with ISO
No reproduction or networking permitted without license from IHS
Not for Resale

| ASN.1 Type Constraint Declaration | |
|---|---|
| **Constraint Name** | **:** SMTActionInfoType_02 |
| **Structured Type** | **:** SMTActionInfoType |
| **Derivation Path** | **:** |
| **Comments** | **:** |
| **Type Definition** | |
| ‘0002’I | -- path_test |

| ASN.1 Type Constraint Declaration | |
|---|---|
| **Constraint Name** | **:** SMTActionInfoType_03 |
| **Structured Type** | **:** SMTActionInfoType |
| **Derivation Path** | **:** |
| **Comments** | **:** |
| **Type Definition** | |
| ‘0003’I | -- self_test |

| ASN.1 Type Constraint Declaration | |
|---|---|
| **Constraint Name** | **:** SMTActionInfoType_04 |
| **Structured Type** | **:** SMTActionInfoType |
| **Derivation Path** | **:** |
| **Comments** | **:** |
| **Type Definition** | |
| ‘0004’I | -- disable_a |

| ASN.1 Type Constraint Declaration | |
|---|---|
| **Constraint Name** | **:** SMTActionInfoType_05 |
| **Structured Type** | **:** SMTActionInfoType |
| **Derivation Path** | **:** |
| **Comments** | **:** |
| **Type Definition** | |
| ‘0005’I | disable_b |

| ASN.1 Type Constraint Declaration | |
|---|---|
| **Constraint Name** | **:** SMTActionInfoType_06 |
| **Structured Type** | **:** SMTActionInfoType |
| **Derivation Path** | **:** |
| **Comments** | **:** |
| **Type Definition** | |
| ‘0006’I | -- disable_m |



Copyright International Organization for Standardization
Provided by IHS under license with ISO
No reproduction or networking permitted without license from IHS
Not for Resale

| ASN.1 Type Constraint Declaration | |
|---|---|
| **Constraint Name** | : SMTActionInfoType_07 |
| **Structured Type** | : SMTActionInfoType |
| **Derivation Path** | : |
| **Comments** | : |
| **Type Definition** | |
| '0007'I | -- ec7 |

| ASN.1 Type Constraint Declaration | |
|---|---|
| **Constraint Name** | : SMTAvailablePathsType_Q |
| **Structured Type** | : CMNAvailablePathsType |
| **Derivation Path** | : |
| **Comments** | : |
| **Type Definition** | |
| ? | |

| ASN.1 Type Constraint Declaration | |
|---|---|
| **Constraint Name** | : SMTBypassPresentType_Q |
| **Structured Type** | : CMNFlag |
| **Derivation Path** | : |
| **Comments** | : |
| **Type Definition** | |
| ? | |

| ASN.1 Type Constraint Declaration | |
|---|---|
| **Constraint Name** | : SMTCapabilitiesType_Q |
| **Structured Type** | : SMTCapabilitiesType |
| **Derivation Path** | : |
| **Comments** | : |
| **Type Definition** | |
| ? | |

--`,,```,,,,````-`-`,,`,,`,`,,`---



Copyright International Organization for Standardization
Provided by IHS under license with ISO
No reproduction or networking permitted without license from IHS
Not for Resale

| ASN.1 Type Constraint Declaration | |
|---|---|
| **Constraint Name** | : SMTCapabilitiesType_00 |
| **Structured Type** | : SMTCapabilitiesType |
| **Derivation Path** | : |
| **Comments** | : |
| **Type Definition** | |
| ‘00000000000000?1’B | -- holdabailable |

| ASN.1 Type Constraint Declaration | |
|---|---|
| **Constraint Name** | : SMTCapabilitiesType_01 |
| **Structured Type** | : SMTCapabilitiesType |
| **Derivation Path** | : |
| **Comments** | : |
| **Type Definition** | |
| ‘000000000000001?’B | -- cf_wrap_ab |

| ASN.1 Type Constraint Declaration | |
|---|---|
| **Constraint Name** | : SMTCF_StateType_Q |
| **Structured Type** | : SMTCF_StateType |
| **Derivation Path** | : |
| **Comments** | : |
| **Type Definition** | |
| ? | |

| ASN.1 Type Constraint Declaration | |
|---|---|
| **Constraint Name** | : SMTCF_StateType_00 |
| **Structured Type** | : SMTCF_StateType |
| **Derivation Path** | : |
| **Comments** | : |
| **Type Definition** | |
| ‘0000’I | -- isolated |

--`,,```,,,,````-`-`,,`,,`,`,,`---



Copyright International Organization for Standardization
Provided by IHS under license with ISO
No reproduction or networking permitted without license from IHS
Not for Resale

| ASN.1 Type Constraint Declaration | |
|---|---|
| **Constraint Name** | **:** SMTCF_StateType_01 |
| **Structured Type** | **:** SMTCF_StateType |
| **Derivation Path** | **:** |
| **Comments** | **:** |
| **Type Definition** | |
| ‘0001’I | -- loacal_a |

| ASN.1 Type Constraint Declaration | |
|---|---|
| **Constraint Name** | **:** SMTCF_StateType_02 |
| **Structured Type** | **:** SMTCF_StateType |
| **Derivation Path** | **:** |
| **Comments** | **:** |
| **Type Definition** | |
| ‘0002’I | -- local_b |

| ASN.1 Type Constraint Declaration | |
|---|---|
| **Constraint Name** | **:** SMTCF_StateType_03 |
| **Structured Type** | **:** SMTCF_StateType |
| **Derivation Path** | **:** |
| **Comments** | **:** |
| **Type Definition** | |
| ‘0003’I | -- local_ab |

| ASN.1 Type Constraint Declaration | |
|---|---|
| **Constraint Name** | **:** SMTCF_StateType_04 |
| **Structured Type** | **:** SMTCF_StateType |
| **Derivation Path** | **:** |
| **Comments** | **:** |
| **Type Definition** | |
| ‘0004’I | -- local_s |

--`,,```,,,,````-`-`,,`,,`,`,,`---



Copyright International Organization for Standardization
Provided by IHS under license with ISO
No reproduction or networking permitted without license from IHS
Not for Resale

| ASN.1 Type Constraint Declaration | |
|---|---|
| **Constraint Name** | : SMTCF_StateType_05 |
| **Structured Type** | : SMTCF_StateType |
| **Derivation Path** | : |
| **Comments** | : |
| **Type Definition** | |
| ‘0005’I | --wrap_a |

| ASN.1 Type Constraint Declaration | |
|---|---|
| **Constraint Name** | : SMTCF_StateType_06 |
| **Structured Type** | : SMTCF_StateType |
| **Derivation Path** | : |
| **Comments** | : |
| **Type Definition** | |
| ‘0006’I | wrap_b |

| ASN.1 Type Constraint Declaration | |
|---|---|
| **Constraint Name** | : SMTCF_StateType_07 |
| **Structured Type** | : SMTCF_StateType |
| **Derivation Path** | : |
| **Comments** | : |
| **Type Definition** | |
| ‘0007’I | wrap_ab |

| ASN.1 Type Constraint Declaration | |
|---|---|
| **Constraint Name** | : SMTCF_StateType_08 |
| **Structured Type** | : SMTCF_StateType |
| **Derivation Path** | : |
| **Comments** | : |
| **Type Definition** | |
| ‘0008’I | -- wrap_s |



Copyright International Organization for Standardization
Provided by IHS under license with ISO
No reproduction or networking permitted without license from IHS
Not for Resale

| ASN.1 Type Constraint Declaration | |
|---|---|
| **Constraint Name** | **:** SMTCF_StateType_09 |
| **Structured Type** | **:** SMTCF_StateType |
| **Derivation Path** | **:** |
| **Comments** | **:** |
| **Type Definition** | |
| ‘0009’I | -- c_wrap_b |

| ASN.1 Type Constraint Declaration | |
|---|---|
| **Constraint Name** | **:** SMTCF_StateType_10 |
| **Structured Type** | **:** SMTCF_StateType |
| **Derivation Path** | **:** |
| **Comments** | **:** |
| **Type Definition** | |
| ‘0010’I | -- c_wrap_b |

| ASN.1 Type Constraint Declaration | |
|---|---|
| **Constraint Name** | **:** SMTCF_StateType_11 |
| **Structured Type** | **:** SMTCF_StateType |
| **Derivation Path** | **:** |
| **Comments** | **:** |
| **Type Definition** | |
| ‘0011’I | -- c_wrap_s |

| ASN.1 Type Constraint Declaration | |
|---|---|
| **Constraint Name** | **:** SMTCF_StateType_12 |
| **Structured Type** | **:** SMTCF_StateType |
| **Derivation Path** | **:** |
| **Comments** | **:** |
| **Type Definition** | |
| ‘0012’I | -- thru |

--`,,```,,,,````-`-`,,`,,`,`,,`---



Copyright International Organization for Standardization
Provided by IHS under license with ISO
No reproduction or networking permitted without license from IHS
Not for Resale

| ASN.1 Type Constraint Declaration | |
|---|---|
| **Constraint Name** | : SMTConfigCapabilitiesType_Q |
| **Structured Type** | : SMTCapabilitiesType |
| **Derivation Path** | : |
| **Comments** | : |
| **Type Definition** | |
| ? | |

| ASN.1 Type Constraint Declaration | |
|---|---|
| **Constraint Name** | : SMTConfigPolicyType_Q |
| **Structured Type** | : SMTConfigPolicyType |
| **Derivation Path** | : |
| **Comments** | : |
| **Type Definition** | |
| ? | |

| ASN.1 Type Constraint Declaration | |
|---|---|
| **Constraint Name** | : SMTConfigPolicyType_00 |
| **Structured Type** | : SMTConfigPolicyType |
| **Derivation Path** | : |
| **Comments** | : |
| **Type Definition** | |
| '0000000000000001'B | -- configuration hold |

| ASN.1 Type Constraint Declaration | |
|---|---|
| **Constraint Name** | : SMTConnectionPolicyType_Q |
| **Structured Type** | : SMTConnectionPolicyType |
| **Derivation Path** | : |
| **Comments** | : |
| **Constraint Value** | |
| ? | |



Copyright International Organization for Standardization
Provided by IHS under license with ISO
No reproduction or networking permitted without license from IHS
Not for Resale

| ASN.1 Type Constraint Declaration | |
|---|---|
| **Constraint Name** | : SMTConnectionPolicyType_00 |
| **Structured Type** | : SMTConnectionPolicyType |
| **Derivation Path** | : |
| **Comments** | : |
| **Constraint Value** | |
| '????????????????1'B | -- rejectA_A |

| ASN.1 Type Constraint Declaration | |
|---|---|
| **Constraint Name** | : SMTConnectionPolicyType_01 |
| **Structured Type** | : SMTConnectionPolicyType |
| **Derivation Path** | : |
| **Comments** | : |
| **Constraint Value** | |
| '????????????????1?'B | -- rejectA_B |

| ASN.1 Type Constraint Declaration | |
|---|---|
| **Constraint Name** | : SMTConnectionPolicyType_02 |
| **Structured Type** | : SMTConnectionPolicyType |
| **Derivation Path** | : |
| **Comments** | : |
| **Constraint Value** | |
| '????????????????1??'B | -- rejectA_S |


--`,,```,,,,````-`-`,,`,,`,`,,`---
Copyright International Organization for Standardization
Provided by IHS under license with ISO
No reproduction or networking permitted without license from IHS
Not for Resale

| ASN.1 Type Constraint Declaration | |
|---|---|
| **Constraint Name** | : SMTConnectionPolicyType_03 |
| **Structured Type** | : SMTConnectionPolicyType |
| **Derivation Path** | : |
| **Comments** | : |
| **Constraint Value** | |
| '????????????1???'B | -- rejectA_M |

| ASN.1 Type Constraint Declaration | |
|---|---|
| **Constraint Name** | : SMTConnectionPolicyType_04 |
| **Structured Type** | : SMTConnectionPolicyType |
| **Derivation Path** | : |
| **Comments** | : |
| **Constraint Value** | |
| '???????????1????'B | -- rejectB_A |

| ASN.1 Type Constraint Declaration | |
|---|---|
| **Constraint Name** | : SMTConnectionPolicyType_05 |
| **Structured Type** | : SMTConnectionPolicyType |
| **Derivation Path** | : |
| **Comments** | : |
| **Constraint Value** | |
| '??????????1?????'B | -- rejectB_B |

| ASN.1 Type Constraint Declaration | |
|---|---|
| **Constraint Name** | : SMTConnectionPolicyType_06 |
| **Structured Type** | : SMTConnectionPolicyType |
| **Derivation Path** | : |
| **Comments** | : |
| **Constraint Value** | |
| '???????????1??????'B | -- rejectB_S |



Copyright International Organization for Standardization
Provided by IHS under license with ISO
No reproduction or networking permitted without license from IHS
Not for Resale

| ASN.1 Type Constraint Declaration | |
|---|---|
| **Constraint Name** | : SMTConnectionPolicyType_07 |
| **Structured Type** | : SMTConnectionPolicyType |
| **Derivation Path** | : |
| **Comments** | : |
| **Constraint Value** | |
| '????????1???????'B | -- rejectB_M |

| ASN.1 Type Constraint Declaration | |
|---|---|
| **Constraint Name** | : SMTConnectionPolicyType_08 |
| **Structured Type** | : SMTConnectionPolicyType |
| **Derivation Path** | : |
| **Comments** | : |
| **Constraint Value** | |
| '???????1????????'B | -- rejectS_A |

| ASN.1 Type Constraint Declaration | |
|---|---|
| **Constraint Name** | : SMTConnectionPolicyType_09 |
| **Structured Type** | : SMTConnectionPolicyType |
| **Derivation Path** | : |
| **Comments** | : |
| **Constraint Value** | |
| '??????1?????????'B | -- rejectS_B |

| ASN.1 Type Constraint Declaration | |
|---|---|
| **Constraint Name** | : SMTConnectionPolicyType_10 |
| **Structured Type** | : SMTConnectionPolicyType |
| **Derivation Path** | : |
| **Comments** | : |
| **Constraint Value** | |
| '?????1??????????'B | -- rejectS_S |


Copyright International Organization for Standardization
Provided by IHS under license with ISO
No reproduction or networking permitted without license from IHS
Not for Resale

| ASN.1 Type Constraint Declaration | |
|---|---|
| **Constraint Name** | : SMTConnectionPolicyType_11 |
| **Structured Type** | : SMTConnectionPolicyType |
| **Derivation Path** | : |
| **Comments** | : |
| **Constraint Value** | |
| '????1???????????0'B | -- rejectS_M |

| ASN.1 Type Constraint Declaration | |
|---|---|
| **Constraint Name** | : SMTConnectionPolicyType_12 |
| **Structured Type** | : SMTConnectionPolicyType |
| **Derivation Path** | : |
| **Comments** | : |
| **Constraint Value** | |
| '???1????????????'B | -- rejectM_A |

| ASN.1 Type Constraint Declaration | |
|---|---|
| **Constraint Name** | : SMTConnectionPolicyType_13 |
| **Structured Type** | : SMTConnectionPolicyType |
| **Derivation Path** | : |
| **Comments** | : |
| **Constraint Value** | |
| '??1?????????????'B | -- rejectM_B |

| ASN.1 Type Constraint Declaration | |
|---|---|
| **Constraint Name** | : SMTConnectionPolicyType_14 |
| **Structured Type** | : SMTConnectionPolicyType |
| **Derivation Path** | : |
| **Comments** | : |
| **Constraint Value** | |
| '?1??????????????'B | -- rejectM_S |



Copyright International Organization for Standardization
Provided by IHS under license with ISO
No reproduction or networking permitted without license from IHS
Not for Resale

| ASN.1 Type Constraint Declaration | |
|---|---|
| **Constraint Name** | : SMTConnectionPolicyType_15 |
| **Structured Type** | : SMTConnectionPolicyType |
| **Derivation Path** | : |
| **Comments** | : |
| **Constraint Value** | |
| '1???????????????'B -- rejectM_M | |

| ASN.1 Type Constraint Declaration | |
|---|---|
| **Constraint Name** | : SMTECMStateType_Q |
| **Structured Type** | : SMTECMStateType |
| **Derivation Path** | : |
| **Comments** | : |
| **Constraint Value** | |
| ? | |

| ASN.1 Type Constraint Declaration | |
|---|---|
| **Constraint Name** | : SMTECMStateType_00 |
| **Structured Type** | : SMTECMStateType |
| **Derivation Path** | : |
| **Comments** | : |
| **Constraint Value** | |
| '0000'I -- Out | |

| ASN.1 Type Constraint Declaration | |
|---|---|
| **Constraint Name** | : SMTECMStateType_01 |
| **Structured Type** | : SMTECMStateType |
| **Derivation Path** | : |
| **Comments** | : |
| **Constraint Value** | |
| '0001'I -- In | |


Copyright International Organization for Standardization
Provided by IHS under license with ISO
No reproduction or networking permitted without license from IHS
Not for Resale

| ASN.1 Type Constraint Declaration | |
|---|---|
| **Constraint Name** | **:** SMTECMStateType_02 |
| **Structured Type** | **:** SMTECMStateType |
| **Derivation Path** | **:** |
| **Comments** | **:** |
| **Constraint Value** | |
| ‘0002’I | -- Trace |

| ASN.1 Type Constraint Declaration | |
|---|---|
| **Constraint Name** | **:** SMTECMStateType_03 |
| **Structured Type** | **:** SMTECMStateType |
| **Derivation Path** | **:** |
| **Comments** | **:** |
| **Constraint Value** | |
| ‘0003’I | -- Leave |

| ASN.1 Type Constraint Declaration | |
|---|---|
| **Constraint Name** | **:** SMTECMStateType_04 |
| **Structured Type** | **:** SMTECMStateType |
| **Derivation Path** | **:** |
| **Comments** | **:** |
| **Constraint Value** | |
| ‘0004’I | -- Path_Test |

| ASN.1 Type Constraint Declaration | |
|---|---|
| **Constraint Name** | **:** SMTECMStateType_05 |
| **Structured Type** | **:** SMTECMStateType |
| **Derivation Path** | **:** |
| **Comments** | **:** |
| **Constraint Value** | |
| ‘0005’I | -- Insert |

--`,,```,,,,````-`-`,,`,,`,`,,`---



Copyright International Organization for Standardization
Provided by IHS under license with ISO
No reproduction or networking permitted without license from IHS
Not for Resale

| ASN.1 Type Constraint Declaration | |
|---|---|
| **Constraint Name** | : SMTECMStateType_06 |
| **Structured Type** | : SMTECMStateType |
| **Derivation Path** | : |
| **Comments** | : |
| **Constraint Value** | |
| '0006'I | -- Check |

| ASN.1 Type Constraint Declaration | |
|---|---|
| **Constraint Name** | : SMTECMStateType_07 |
| **Structured Type** | : SMTECMStateType |
| **Derivation Path** | : |
| **Comments** | : |
| **Constraint Value** | |
| '0007'I | -- Deinsert |

| ASN.1 Type Constraint Declaration | |
|---|---|
| **Constraint Name** | : SMTHiVersionIdType_Q |
| **Structured Type** | : SMTHiVersionIdType |
| **Derivation Path** | : |
| **Comments** | : |
| **Type Definition** | |
| ? | |

| ASN.1 Type Constraint Declaration | | |
|---|---|---|
| **Constraint Name** | : SMTHoldConditionDataType_Q | |
| **Structured Type** | : SMTHoldConditionDataType | |
| **Derivation Path** | : | |
| **Comments** | : | |
| **Type Definition** | | |
| { | conditionstate | CMNFlag_Q, |
| | holdcondition | SMTHoldStateType_Q } |


Copyright International Organization for Standardization
Provided by IHS under license with ISO
No reproduction or networking permitted without license from IHS
Not for Resale

| ASN.1 Type Constraint Declaration | |
|---|---|
| **Constraint Name** | : SMTHoldStateType_Q |
| **Structured Type** | : SMTHoldStateType |
| **Derivation Path** | : |
| **Comments** | : |
| **Type Definition** | |
| ? | |

| ASN.1 Type Constraint Declaration | |
|---|---|
| **Constraint Name** | : SMTHoldStateType_00 |
| **Structured Type** | : SMTHoldStateType |
| **Derivation Path** | : |
| **Comments** | : |
| **Type Definition** | |
| '0000'I -- not holding | |

| ASN.1 Type Constraint Declaration | |
|---|---|
| **Constraint Name** | : SMTHoldStateType_01 |
| **Structured Type** | : SMTHoldStateType |
| **Derivation Path** | : |
| **Comments** | : |
| **Type Definition** | |
| '1'I -- holding on primary | |

| ASN.1 Type Constraint Declaration | |
|---|---|
| **Constraint Name** | : SMTHoldStateType_02 |
| **Structured Type** | : SMTHoldStateType |
| **Derivation Path** | : |
| **Comments** | : |
| **Type Definition** | |
| '2'I -- holding on secondary | |

| ASN.1 Type Constraint Declaration | |
|---|---|
| **Constraint Name** | : SMTLoVersionIdType_Q |
| **Structured Type** | : SMTLoVersionIdType |
| **Derivation Path** | : |
| **Comments** | : |
| **Type Definition** | |
| ? | |



Copyright International Organization for Standardization
Provided by IHS under license with ISO
No reproduction or networking permitted without license from IHS
Not for Resale

| ASN.1 Type Constraint Declaration | |
|---|---|
| **Constraint Name** | : SMTMac_CtType_Q |
| **Structured Type** | : SMTMac_CtType |
| **Derivation Path** | : |
| **Comments** | : |
| **Type Definition** | |
| ? | |

| ASN.1 Type Constraint Declaration | | |
|---|---|---|
| **Constraint Name** | : SMTManufacturerDataType_Q | |
| **Structured Type** | : SMTManufacturerDataType | |
| **Derivation Path** | : | |
| **Comments** | : | |
| **Type Definition** | | |
| { | manufactureroui | OUI_REF, |
| | manufacturerdata | ANY } |

| ASN.1 Type Constraint Declaration | |
|---|---|
| **Constraint Name** | : SMTMaster_CtType_Q |
| **Structured Type** | : SMTMaster_CtType |
| **Derivation Path** | : |
| **Comments** | : |
| **Type Definition** | |
| ? | |

| ASN.1 Type Constraint Declaration | |
|---|---|
| **Constraint Name** | : SMTMIBVersionIdType_Q |
| **Structured Type** | : SMTMIBVersionIdType |
| **Derivation Path** | : |
| **Comments** | : |
| **Type Definition** | |
| ? | |


Copyright International Organization for Standardization
Provided by IHS under license with ISO
No reproduction or networking permitted without license from IHS
Not for Resale

| ASN.1 Type Constraint Declaration | |
|---|---|
| **Constraint Name** | : SMTNonMaster_CtType_Q |
| **Structured Type** | : SMTNonMaster_CtType |
| **Derivation Path** | : |
| **Comments** | : |
| **Type Definition** | |
| ? | |

| ASN.1 Type Constraint Declaration | |
|---|---|
| **Constraint Name** | : SMTOpVersionIdType_Q |
| **Structured Type** | : SMTOpVersionIdType |
| **Derivation Path** | : |
| **Comments** | : |
| **Type Definition** | |
| ? | |

| ASN.1 Type Constraint Declaration | |
|---|---|
| **Constraint Name** | : SMTPeerWrapConditionDataType_Q |
| **Structured Type** | : SMTPeerWrapConditionDataType |
| **Derivation Path** | : |
| **Comments** | : |
| **Type Definition** | |
| { conditionstate CMNFlag_Q,<br>peerwrapcondition SMTCF_StateType_Q } | |

| ASN.1 Type Constraint Declaration | |
|---|---|
| **Constraint Name** | : SMTPeerWrapConditionType_Q |
| **Structured Type** | : SMTPeerWrapConditionType |
| **Derivation Path** | : |
| **Comments** | : |
| **Type Definition** | |
| ? | |

--`,,```,,,,````-`-`,,`,,`,`,,`---



Copyright International Organization for Standardization
Provided by IHS under license with ISO
No reproduction or networking permitted without license from IHS
Not for Resale

| ASN.1 Type Constraint Declaration | |
|---|---|
| **Constraint Name** | : SMTPeerWrapFlagType_Q |
| **Structured Type** | : SMTPeerWrapFlagType |
| **Derivation Path** | : |
| **Comments** | : |
| **Type Definition** | |
| ? | |

| ASN.1 Type Constraint Declaration | |
|---|---|
| **Constraint Name** | : SMTRemoteDisconnectFlagType_Q |
| **Structured Type** | : SMTRemoteDisconnectFlagType |
| **Derivation Path** | : |
| **Comments** | : |
| **Type Definition** | |
| ? | |

| ASN.1 Type Constraint Declaration | | | |
|---|---|---|---|
| **Constraint Name** | : SMTSetCountType_Q | | |
| **Structured Type** | : SMTSetCountType | | |
| **Derivation Path** | : | | |
| **Comments** | : | | |
| **Type Definition** | | | |
| { | count | CMNCounter_Q, | |
| | settimestamp | CMNTimeStampType_Q | } |

| ASN.1 Type Constraint Declaration | | | |
|---|---|---|---|
| **Constraint Name** | : SMTStationIdentifierType_Q | | |
| **Structured Type** | : SMTStationIdentifierType | | |
| **Derivation Path** | : | | |
| **Comments** | : | | |
| **Type Definition** | | | |
| { | implementeroctet | IMPLEMENT_OCTET, | |
| | longaddress | CMNLongAddressType_Q | } |


--`,,```,,,,````-`-`,,`,,`,`,,`---
Copyright International Organization for Standardization
Provided by IHS under license with ISO
No reproduction or networking permitted without license from IHS
Not for Resale

| ASN.1 Type Constraint Declaration | |
|---|---|
| **Constraint Name** | **:** SMTStatusType_Q |
| **Structured Type** | **:** SMTStatusType |
| **Derivation Path** | **:** |
| **Comments** | **:** |
| **Constraint Value** | |
| ? | |

| ASN.1 Type Constraint Declaration | |
|---|---|
| **Constraint Name** | **:** SMTStatusType_00 |
| **Structured Type** | **:** SMTStatusType |
| **Derivation Path** | **:** |
| **Comments** | **:** |
| **Constraint Value** | |
| '0000'I | -- concatenated |

| ASN.1 Type Constraint Declaration | |
|---|---|
| **Constraint Name** | **:** SMTStatusType_01 |
| **Structured Type** | **:** SMTStatusType |
| **Derivation Path** | **:** |
| **Comments** | **:** |
| **Constraint Value** | |
| '0001'I | -- separated |

| ASN.1 Type Constraint Declaration | |
|---|---|
| **Constraint Name** | **:** SMTStatusType_02 |
| **Structured Type** | **:** SMTStatusType |
| **Derivation Path** | **:** |
| **Comments** | **:** |
| **Constraint Value** | |
| '0002'I-- thru | |



Copyright International Organization for Standardization
Provided by IHS under license with ISO
No reproduction or networking permitted without license from IHS
Not for Resale

| ASN.1 Type Constraint Declaration | |
|---|---|
| **Constraint Name** | : SMTStatRptPolicyType_Q |
| **Structured Type** | : SMTStatRptPolicyType |
| **Derivation Path** | : |
| **Comments** | : |
| **Constraint Value** | |
| ? | |

| ASN.1 Type Constraint Declaration | |
|---|---|
| **Constraint Name** | : SMTT_NotifyType_Q |
| **Structured Type** | : SMTStatusType |
| **Derivation Path** | : |
| **Comments** | : |
| **Constraint Value** | |
| ? | |

| ASN.1 Type Constraint Declaration | |
|---|---|
| **Constraint Name** | : SMTTimeStampType_Q |
| **Structured Type** | : SMTTimeStampType |
| **Derivation Path** | : |
| **Comments** | : |
| **Constraint Value** | |
| ? | |

| ASN.1 Type Constraint Declaration | |
|---|---|
| **Constraint Name** | : SMTTrace_MaxExpirationType_Q |
| **Structured Type** | : SMTTrace_MaxExpirationType |
| **Derivation Path** | : |
| **Comments** | : |
| **Constraint Value** | |
| ? | |


Copyright International Organization for Standardization
Provided by IHS under license with ISO
No reproduction or networking permitted without license from IHS
Not for Resale

| ASN.1 Type Constraint Declaration | |
|---|---|
| **Constraint Name** | : SMTTransitionTimeStampType_Q |
| **Structured Type** | : SMTTransitionTimeStampType |
| **Derivation Path** | : |
| **Comments** | : |
| **Constraint Value** | |
| ? | |

| ASN.1 Type Constraint Declaration | |
|---|---|
| **Constraint Name** | : SMTUserDataType_Q |
| **Structured Type** | : SMTUserDataType |
| **Derivation Path** | : |
| **Comments** | : |
| **Constraint Value** | |
| ? | |

| ASN.1 Type Constraint Declaration | |
|---|---|
| **Constraint Name** | : SMTVersionType_Q |
| **Structured Type** | : SMTVersionType |
| **Derivation Path** | : |
| **Comments** | : |
| **Constraint Value** | |
| ? | |

### MAC Definitions

| ASN.1 Type Constraint Declaration | |
|---|---|
| **Constraint Name** | : MACAvailablePathsType_Q |
| **Structured Type** | : MACAvailablePathsType |
| **Derivation Path** | : |
| **Comments** | : |
| **Constraint Value** | |
| ? | |



Copyright International Organization for Standardization
Provided by IHS under license with ISO
No reproduction or networking permitted without license from IHS
Not for Resale

| ASN.1 Type Constraint Declaration | |
|---|---|
| **Constraint Name** | : MACBridgeType_Q |
| **Structured Type** | : MACBridgeType |
| **Derivation Path** | : |
| **Comments** | : |
| **Constraint Value** | |
| ? | |

| ASN.1 Type Constraint Declaration | |
|---|---|
| **Constraint Name** | : MACBridgeType_00 |
| **Structured Type** | : MACBridgeType |
| **Derivation Path** | : |
| **Comments** | : |
| **Constraint Value** | |
| '0000000000000001'B | -- Transparent Bridging Active |

| ASN.1 Type Constraint Declaration | |
|---|---|
| **Constraint Name** | : MACBridgeType_01 |
| **Structured Type** | : MACBridgeType |
| **Derivation Path** | : |
| **Comments** | : |
| **Constraint Value** | |
| '0000000000000010'B | -- Source Routing Active |

| ASN.1 Type Constraint Declaration | |
|---|---|
| **Constraint Name** | : MACBridgeType_02 |
| **Structured Type** | : MACBridgeType |
| **Derivation Path** | : |
| **Comments** | : |
| **Constraint Value** | |
| '0000000000000100'B | -- Source Routing Transparent Active} |


Copyright International Organization for Standardization
Provided by IHS under license with ISO
No reproduction or networking permitted without license from IHS
Not for Resale

| ASN.1 Type Constraint Declaration | |
|---|---|
| **Constraint Name** | : MACCopied_CtType_Q |
| **Structured Type** | : MACCopied_CtType |
| **Derivation Path** | : |
| **Comments** | : |
| **Constraint Value** | |
| ? | |

| ASN.1 Type Constraint Declaration | |
|---|---|
| **Constraint Name** | : MACCurrentPathType_Q |
| **Structured Type** | : MACCurrentPathType |
| **Derivation Path** | : |
| **Comments** | : |
| **Constraint Value** | |
| ? | |

| ASN.1 Type Constraint Declaration | |
|---|---|
| **Constraint Name** | : MACDA_FlagType_Q |
| **Structured Type** | : MACDA_FlagType |
| **Derivation Path** | : |
| **Comments** | : |
| **Constraint Value** | |
| ? | |

| ASN.1 Type Constraint Declaration | |
|---|---|
| **Constraint Name** | : MACDownstreamNbrType_Q |
| **Structured Type** | : MACDownstreamNbrType |
| **Derivation Path** | : |
| **Comments** | : |
| **Constraint Value** | |
| ? | |



Copyright International Organization for Standardization
Provided by IHS under license with ISO
No reproduction or networking permitted without license from IHS
Not for Resale

| ASN.1 Type Constraint Declaration | |
|---|---|
| **Constraint Name** | : MACDownstreamPORTType_Q |
| **Structured Type** | : MACDownstreamPORTType |
| **Derivation Path** | : |
| **Comments** | : |
| **Constraint Value** | |
| ? | |

| ASN.1 Type Constraint Declaration | |
|---|---|
| **Constraint Name** | : MACDupAddressTest_Q |
| **Structured Type** | : MACDupAddressTestType |
| **Derivation Path** | : |
| **Comments** | : |
| **Constraint Value** | |
| ? | |

| ASN.1 Type Constraint Declaration | | |
|---|---|---|
| **Constraint Name** | : MACDupAddressTest_00 | |
| **Structured Type** | : MACDupAddressTestType | |
| **Derivation Path** | : | |
| **Comments** | : | |
| **Constraint Value** | | |
| { | ‘0000’I | none |

| ASN.1 Type Constraint Declaration | |
|---|---|
| **Constraint Name** | : MACDupAddressTest_01 |
| **Structured Type** | : MACDupAddressTestType |
| **Derivation Path** | : |
| **Comments** | : |
| **Constraint Value** | |
| ‘0001’I | -- pass |


Copyright International Organization for Standardization
Provided by IHS under license with ISO
No reproduction or networking permitted without license from IHS
Not for Resale

| ASN.1 Type Constraint Declaration | |
|---|---|
| **Constraint Name** | **:** MACDupAddressTest_02 |
| **Structured Type** | **:** MACDupAddressTestType |
| **Derivation Path** | **:** |
| **Comments** | **:** |
| **Constraint Value** | |
| ‘0002’I | -- fail |

| ASN.1 Type Constraint Declaration | |
|---|---|
| **Constraint Name** | **:** MACDupConditionType_Q |
| **Structured Type** | **:** MACDupConditionType |
| **Derivation Path** | **:** |
| **Comments** | **:** |
| **Constraint Value** | |
| ? | |

| ASN.1 Type Constraint Declaration | |
|---|---|
| **Constraint Name** | **:** MACDupConditionType_00 |
| **Structured Type** | **:** MACDupConditionType |
| **Derivation Path** | **:** |
| **Comments** | **:** |
| **Type Definition** | |
| ‘0000000000000001’B | -- DA Flag (my dup) |

| ASN.1 Type Constraint Declaration | |
|---|---|
| **Constraint Name** | **:** MACDupConditionType_01 |
| **Structured Type** | **:** MACDupConditionType |
| **Derivation Path** | **:** |
| **Comments** | **:** |
| **Type Definition** | |
| ‘0000000000000010’B | -- UNDA Flag (una dup) |

--`,,```,,,,````-`-`,,`,,`,`,,`---



Copyright International Organization for Standardization
Provided by IHS under license with ISO
No reproduction or networking permitted without license from IHS
Not for Resale

| ASN.1 Type Constraint Declaration | |
|---|---|
| **Constraint Name** | : MACDuplicateAddressDataType_Q |
| **Structured Type** | : MACDuplicateAddressDataType |
| **Derivation Path** | : |
| **Comments** | : |

| Constraint Value |
|---|
| { conditionstate CMNFlag_Q,<br>duplicateaddresstype MACDuplicateAddressType_Q } |

| ASN.1 Type Constraint Declaration | |
|---|---|
| **Constraint Name** | : MACDuplicateAddressType_Q |
| **Structured Type** | : MACDuplicateAddressType |
| **Derivation Path** | : |
| **Comments** | : |

| Type Definition |
|---|
| { dupcondition MACDupConditionType_Q,<br>fddilong CMNLongAddressType_Q,<br>fddiunalong CMNLongAddressType_Q } |

| ASN.1 Type Constraint Declaration | |
|---|---|
| **Constraint Name** | : MACError_CtType_Q |
| **Structured Type** | : MACError_CTType |
| **Derivation Path** | : |
| **Comments** | : |

| Constraint Value |
|---|
| ? |

| ASN.1 Type Constraint Declaration | |
|---|---|
| **Constraint Name** | : MACFrame_CtType_Q |
| **Structured Type** | : MACFrame_CtType |
| **Derivation Path** | : |
| **Comments** | : |

| Constraint Value |
|---|
| ? |


Copyright International Organization for Standardization
Provided by IHS under license with ISO
No reproduction or networking permitted without license from IHS
Not for Resale

| ASN.1 Type Constraint Declaration | |
|---|---|
| **Constraint Name** | : MACFrameErrorDataType_Q |
| **Structured Type** | : MACFrameErrorDataType |
| **Derivation Path** | : |
| **Comments** | : |

**Type Definition**

```
{       conditionstate      CMNFlag_Q,
        framect             CMNCounter_Q,
        errorct             CMNCounter_Q,
        lostct              CMNCounger_Q,
        frameerrorratio     MACFrameErrorRatioType_Q    }
```

| ASN.1 Type Constraint Declaration | |
|---|---|
| **Constraint Name** | : MACFrameErrorRatioType_Q |
| **Structured Type** | : MACFrameErrorRatioType |
| **Derivation Path** | : |
| **Comments** | : |

**Constraint Value**

?

| ASN.1 Type Constraint Declaration | |
|---|---|
| **Constraint Name** | : MACFrameErrorThresholdType_Q |
| **Structured Type** | : MACFrameErrorThresholdType |
| **Derivation Path** | : |
| **Comments** | : |

**Constraint Value**

?

| ASN.1 Type Constraint Declaration | |
|---|---|
| **Constraint Name** | : MACFS_Functions_Q |
| **Structured Type** | : MACFS_Functions |
| **Derivation Path** | : |
| **Comments** | : |

**Constraint Value**

?



Copyright International Organization for Standardization
Provided by IHS under license with ISO
No reproduction or networking permitted without license from IHS
Not for Resale

| ASN.1 Type Constraint Declaration | |
|---|---|
| **Constraint Name** | : MACFS_Functions_00 |
| **Structured Type** | : MACFS_Functions |
| **Derivation Path** | : |
| **Comments** | : |
| **Constraint Value** | |
| '0000000000000001'B | -- fs-repeating |

| ASN.1 Type Constraint Declaration | |
|---|---|
| **Constraint Name** | : MACFS_Functions_01 |
| **Structured Type** | : MACFS_Functions |
| **Derivation Path** | : |
| **Comments** | : |
| **Constraint Value** | |
| '0000000000000010'B | -- fs-setting |

| ASN.1 Type Constraint Declaration | |
|---|---|
| **Constraint Name** | : MACFS_Functions_02 |
| **Structured Type** | : MACFS_Functions |
| **Derivation Path** | : |
| **Comments** | : |
| **Constraint Value** | |
| '0000000000000100'B | -- fs-clearing |

| ASN.1 Type Constraint Declaration | |
|---|---|
| **Constraint Name** | : MACHWPresentType_Q |
| **Structured Type** | : MACHWPresentType |
| **Derivation Path** | : |
| **Comments** | : |
| **Constraint Value** | |
| ? | |

| ASN.1 Type Constraint Declaration | |
|---|---|
| **Constraint Name** | : MACLate_CtType_Q |
| **Structured Type** | : MACLate_CtType |
| **Derivation Path** | : |
| **Comments** | : |
| **Constraint Value** | |
| ? | |


Copyright International Organization for Standardization
Provided by IHS under license with ISO
No reproduction or networking permitted without license from IHS
Not for Resale

| ASN.1 Type Constraint Declaration | |
|---|---|
| **Constraint Name** | : MACLost_CtType_Q |
| **Structured Type** | : MACLost_CtType |
| **Derivation Path** | : |
| **Comments** | : |
| **Constraint Value** | |
| ? | |

| ASN.1 Type Constraint Declaration | |
|---|---|
| **Constraint Name** | : MACUnitdataAvailableType_Q |
| **Structured Type** | : MACUnitdataAvailableType |
| **Derivation Path** | : |
| **Comments** | : |
| **Constraint Value** | |
| ? | |

| ASN.1 Type Constraint Declaration | |
|---|---|
| **Constraint Name** | : MACMAUnitdataEnableType_Q |
| **Structured Type** | : MACMAUnitdataEnableType |
| **Derivation Path** | : |
| **Comments** | : |
| **Constraint Value** | |
| ? | |

| ASN.1 Type Constraint Declaration | |
|---|---|
| **Constraint Name** | : MACNAConditionType_Q |
| **Structured Type** | : MACNAConditionType |
| **Derivation Path** | : |
| **Comments** | : |
| **Type Definition** | |
| ? | |



--`,,```,,,,````-`-`,,`,,`,`,,`---
Copyright International Organization for Standardization
Provided by IHS under license with ISO
No reproduction or networking permitted without license from IHS
Not for Resale

| ASN.1 Type Constraint Declaration | |
|---|---|
| **Constraint Name** | : MACNAConditionType_00 |
| **Structured Type** | : MACNAConditionType |
| **Derivation Path** | : |
| **Comments** | : |
| **Type Definition** | |
| ‘00000001’B | -- una change |

| ASN.1 Type Constraint Declaration | |
|---|---|
| **Constraint Name** | : MACNAConditionType_01 |
| **Structured Type** | : MACNAConditionType |
| **Derivation Path** | : |
| **Comments** | : |
| **Type Definition** | |
| ‘00000010’B | -- dna change |

| ASN.1 Type Constraint Declaration | |
|---|---|
| **Constraint Name** | : MACNAConditionType_02 |
| **Structured Type** | : MACNAConditionType |
| **Derivation Path** | : |
| **Comments** | : |
| **Type Definition** | |
| ‘00000011’B | -- una and dna change |

| ASN.1 Type Constraint Declaration | | |
|---|---|---|
| **Constraint Name** | : MACNeighborChangeDataType_Q | |
| **Structured Type** | : MACNeighborChangeDataType | |
| **Derivation Path** | : | |
| **Comments** | : | |
| **Type Definition** | | |
| { | multipleoccurrence | CMNFlag_Q, |
| | neighborchangetype | MACNeighborChangeType_Q } |


Copyright International Organization for Standardization
Provided by IHS under license with ISO
No reproduction or networking permitted without license from IHS
Not for Resale

| ASN.1 Type Constraint Declaration | | |
|---|---|---|
| **Constraint Name** | : | MACNeighborChangeType_Q |
| **Structured Type** | : | MACNeighborChangeType |
| **Derivation Path** | : | |
| **Comments** | : | |

| Type Definition | | |
|---|---|---|
| { | nacondition | MACNAConditionType_Q, |
| | olduna | CMNLongAddressType_Q, |
| | newuna | CMNLongAddressType_Q, |
| | olddna | CMNLongAddressType_Q, |
| | newdna | CMNLongAddressType_Q, |
| | currentpath | CMNCurrentPathType_Q, |
| | smtaddress | CMNLongAddressType_Q } |

| ASN.1 Type Constraint Declaration | | |
|---|---|---|
| **Constraint Name** | : | MACNotCopied_CtType_Q |
| **Structured Type** | : | MACNotCopied_CtType |
| **Derivation Path** | : | |
| **Comments** | : | |

| Constraint Value |
|---|
| ? |

| ASN.1 Type Constraint Declaration | | |
|---|---|---|
| **Constraint Name** | : | MACNotCopiedFlagType_Q |
| **Structured Type** | : | MACNotCopiedFlagType |
| **Derivation Path** | : | |
| **Comments** | : | |

| Constraint Value |
|---|
| ? |

| ASN.1 Type Constraint Declaration | | |
|---|---|---|
| **Constraint Name** | : | MACNotCopiedDataType_Q |
| **Structured Type** | : | MACNotCopiedDataType |
| **Derivation Path** | : | |
| **Comments** | : | |

| Type Definition | | |
|---|---|---|
| { | conditionstate | CMNFlag_Q, |
| | notcopiedct | CMNCounter_Q, |
| | copiedct | CMNCounter_Q, |
| | notcopiedratio | MACNotCopiedRatioType_Q } |



Copyright International Organization for Standardization
Provided by IHS under license with ISO
No reproduction or networking permitted without license from IHS
Not for Resale

| ASN.1 Type Constraint Declaration | |
|---|---|
| **Constraint Name** | : MACNotCopiedRatioType_Q |
| **Structured Type** | : MACNotCopiedRatioType |
| **Derivation Path** | : |
| **Comments** | : |
| **Type Definition** | |
| ? | |

| ASN.1 Type Constraint Declaration | |
|---|---|
| **Constraint Name** | : MACNotCopiedThresholdType_Q |
| **Structured Type** | : MACNotCopiedThresholdType |
| **Derivation Path** | : |
| **Comments** | : |
| **Type Definition** | |
| ? | |

| ASN.1 Type Constraint Declaration | | |
|---|---|---|
| **Constraint Name** | : MACPathChangeDataType_Q | |
| **Structured Type** | : MACPathChangeDataType | |
| **Derivation Path** | : | |
| **Comments** | : | |
| **Constraint Value** | | |
| { | multipleoccurrence | CMNFlag_Q, |
| | pathchangetype | MACPathChangeType_Q } |

| ASN.1 Type Constraint Declaration | | |
|---|---|---|
| **Constraint Name** | : MACPathChangeType_Q | |
| **Structured Type** | : MACPathChangeType | |
| **Derivation Path** | : | |
| **Comments** | : | |
| **Constraint Value** | | |
| { | availablepath | CMNAvailablePathsType_Q, |
| | currentpath | CMNCurrentPathType_Q, |
| | requestedpath | MACRequestedPathsType_Q } |


Copyright International Organization for Standardization
Provided by IHS under license with ISO
No reproduction or networking permitted without license from IHS
Not for Resale

| ASN.1 Type Constraint Declaration | |
|---|---|
| **Constraint Name** | : MACRequestedPathsType_Q |
| **Structured Type** | : MACRequestedPathsType |
| **Derivation Path** | : |
| **Comments** | : |
| **Constraint Value** | |
| ? | |

| ASN.1 Type Constraint Declaration | |
|---|---|
| **Constraint Name** | : MACRingOp_CtType_Q |
| **Structured Type** | : MACRingOp_CtType |
| **Derivation Path** | : |
| **Comments** | : |
| **Constraint Value** | |
| ? | |

| ASN.1 Type Constraint Declaration | |
|---|---|
| **Constraint Name** | : MACRMTStateType_Q |
| **Structured Type** | : MACRMTStateType |
| **Derivation Path** | : |
| **Comments** | : |
| **Constraint Value** | |
| ? | |

| ASN.1 Type Constraint Declaration | |
|---|---|
| **Constraint Name** | : MACRMTStateType_00 |
| **Structured Type** | : MACRMTStateType |
| **Derivation Path** | : |
| **Comments** | : |
| **Constraint Value** | |
| '0000'I | -- Isolated |



Copyright International Organization for Standardization
Provided by IHS under license with ISO
No reproduction or networking permitted without license from IHS
Not for Resale

| ASN.1 Type Constraint Declaration | |
|---|---|
| **Constraint Name** | **:** MACRMTStateType_01 |
| **Structured Type** | **:** MACRMTStateType |
| **Derivation Path** | **:** |
| **Comments** | **:** |
| **Constraint Value** | |
| ‘0001’I | -- Non_Op |

| ASN.1 Type Constraint Declaration | |
|---|---|
| **Constraint Name** | **:** MACRMTStateType_02 |
| **Structured Type** | **:** MACRMTStateType |
| **Derivation Path** | **:** |
| **Comments** | **:** |
| **Constraint Value** | |
| ‘0002’I | -- Ring_Op |

| ASN.1 Type Constraint Declaration | |
|---|---|
| **Constraint Name** | **:** MACRMTStateType_03 |
| **Structured Type** | **:** MACRMTStateType |
| **Derivation Path** | **:** |
| **Comments** | **:** |
| **Constraint Value** | |
| ‘0003’I | -- Detect |

| ASN.1 Type Constraint Declaration | |
|---|---|
| **Constraint Name** | **:** MACRMTStateType_04 |
| **Structured Type** | **:** MACRMTStateType |
| **Derivation Path** | **:** |
| **Comments** | **:** |
| **Constraint Value** | |
| ‘0004’I | -- Non_Op_Dup |


--`,,```,,,,````-`-`,,`,,`,`,,`---
Copyright International Organization for Standardization
Provided by IHS under license with ISO
No reproduction or networking permitted without license from IHS
Not for Resale

| ASN.1 Type Constraint Declaration | |
|---|---|
| **Constraint Name** | **:** MACRMTStateType_05 |
| **Structured Type** | **:** MACRMTStateType |
| **Derivation Path** | **:** |
| **Comments** | **:** |
| **Constraint Value** | |
| ‘5’I | -- Ring_Op_Dup |

| ASN.1 Type Constraint Declaration | |
|---|---|
| **Constraint Name** | **:** MACRMTStateType_06 |
| **Structured Type** | **:** MACRMTStateType |
| **Derivation Path** | **:** |
| **Comments** | **:** |
| **Constraint Value** | |
| ‘0006’I | -- Directed |

| ASN.1 Type Constraint Declaration | |
|---|---|
| **Constraint Name** | **:** MACRMTStateType_07 |
| **Structured Type** | **:** MACRMTStateType |
| **Derivation Path** | **:** |
| **Comments** | **:** |
| **Constraint Value** | |
| ‘0007’I | -- Trace |

| ASN.1 Type Constraint Declaration | |
|---|---|
| **Constraint Name** | **:** MACShortAddressType_Q |
| **Structured Type** | **:** MACShortAddressType |
| **Derivation Path** | **:** |
| **Comments** | **:** |
| **Constraint Value** | |
| ? | |



Copyright International Organization for Standardization
Provided by IHS under license with ISO
No reproduction or networking permitted without license from IHS
Not for Resale

| ASN.1 Type Constraint Declaration | |
|---|---|
| **Constraint Name** | : MACSMTAddressType_Q |
| **Structured Type** | : MACSMTAddressType |
| **Derivation Path** | : |
| **Comments** | : |
| **Constraint Value** | |
| ? | |

| ASN.1 Type Constraint Declaration | |
|---|---|
| **Constraint Name** | : MACT_MaxCapabilityType_Q |
| **Structured Type** | : MACT_MaxCapabilityType |
| **Derivation Path** | : |
| **Comments** | : |
| **Constraint Value** | |
| ? | |

| ASN.1 Type Constraint Declaration | |
|---|---|
| **Constraint Name** | : MACT_Pri0Type_Q |
| **Structured Type** | : MACT_Pri0Type |
| **Derivation Path** | : |
| **Comments** | : |
| **Constraint Value** | |
| ? | |

| ASN.1 Type Constraint Declaration | |
|---|---|
| **Constraint Name** | : MACT_Pri1Type_Q |
| **Structured Type** | : MACT_Pri1Type |
| **Derivation Path** | : |
| **Comments** | : |
| **Constraint Value** | |
| ? | |


Copyright International Organization for Standardization
Provided by IHS under license with ISO
No reproduction or networking permitted without license from IHS
Not for Resale

| ASN.1 Type Constraint Declaration | |
|---|---|
| **Constraint Name** | : MACT_Pri2Type_Q |
| **Structured Type** | : MACT_Pri2Type |
| **Derivation Path** | : |
| **Comments** | : |
| **Constraint Value** | |
| ? | |

| ASN.1 Type Constraint Declaration | |
|---|---|
| **Constraint Name** | : MACT_Pri3Type_Q |
| **Structured Type** | : MACT_Pri3Type |
| **Derivation Path** | : |
| **Comments** | : |
| **Constraint Value** | |
| ? | |

| ASN.1 Type Constraint Declaration | |
|---|---|
| **Constraint Name** | : MACT_Pri4Type_Q |
| **Structured Type** | : MACT_Pri4Type |
| **Derivation Path** | : |
| **Comments** | : |
| **Constraint Value** | |
| ? | |

| ASN.1 Type Constraint Declaration | |
|---|---|
| **Constraint Name** | : MACT_Pri5Type_Q |
| **Structured Type** | : MACT_Pri5Type |
| **Derivation Path** | : |
| **Comments** | : |
| **Constraint Value** | |
| ? | |



Copyright International Organization for Standardization
Provided by IHS under license with ISO
No reproduction or networking permitted without license from IHS
Not for Resale

| ASN.1 Type Constraint Declaration | |
|---|---|
| **Constraint Name** | : MACT_Pri6Type_Q |
| **Structured Type** | : MACT_Pri6Type |
| **Derivation Path** | : |
| **Comments** | : |
| **Constraint Value** | |
| ? | |

| ASN.1 Type Constraint Declaration | |
|---|---|
| **Constraint Name** | : MACTMaxType_Q |
| **Structured Type** | : MACTMaxType |
| **Derivation Path** | : |
| **Comments** | : |
| **Constraint Value** | |
| ? | |

| ASN.1 Type Constraint Declaration | |
|---|---|
| **Constraint Name** | : MACTNegType_Q |
| **Structured Type** | : CMNTNegType |
| **Derivation Path** | : |
| **Comments** | : |
| **Constraint Value** | |
| ? | |


Copyright International Organization for Standardization
Provided by IHS under license with ISO
No reproduction or networking permitted without license from IHS
Not for Resale

| ASN.1 Type Constraint Declaration | |
|---|---|
| **Constraint Name** | : MACToken_CtType_Q |
| **Structured Type** | : MACToken_CtType |
| **Derivation Path** | : |
| **Comments** | : |
| **Constraint Value** | |
| ? | |

| ASN.1 Type Constraint Declaration | |
|---|---|
| **Constraint Name** | : MACTransmit_CtType_Q |
| **Structured Type** | : MACTransmit_CtType |
| **Derivation Path** | : |
| **Comments** | : |
| **Constraint Value** | |
| ? | |

| ASN.1 Type Constraint Declaration | |
|---|---|
| **Constraint Name** | : MACTReqType_Q |
| **Structured Type** | : MACTReqType |
| **Derivation Path** | : |
| **Comments** | : |
| **Constraint Value** | |
| ? | |

| ASN.1 Type Constraint Declaration | |
|---|---|
| **Constraint Name** | : MACTVXCapabilityType_Q |
| **Structured Type** | : MACTVXCapabilityType |
| **Derivation Path** | : |
| **Comments** | : |
| **Constraint Value** | |
| ? | |

| ASN.1 Type Constraint Declaration | |
|---|---|
| **Constraint Name** | : MACExpired_CtType_Q |
| **Structured Type** | : MACExpired_CtType |
| **Derivation Path** | : |
| **Comments** | : |
| **Constraint Value** | |
| ? | |



Copyright International Organization for Standardization
Provided by IHS under license with ISO
No reproduction or networking permitted without license from IHS
Not for Resale

| ASN.1 Type Constraint Declaration | |
|---|---|
| **Constraint Name** | : MACTvxValueType_Q |
| **Structured Type** | : MACTvxValueType |
| **Derivation Path** | : |
| **Comments** | : |
| **Constraint Value** | |
| ? | |

| ASN.1 Type Constraint Declaration | |
|---|---|
| **Constraint Name** | : MACUNDA_FlagType_Q |
| **Structured Type** | : MACUNDA_FlagType |
| **Derivation Path** | : |
| **Comments** | : |
| **Constraint Value** | |
| ? | |

| ASN.1 Type Constraint Declaration | |
|---|---|
| **Constraint Name** | : MACUpstreamNbrType_Q |
| **Structured Type** | : MACUpstreamNbrType |
| **Derivation Path** | : |
| **Comments** | : |
| **Constraint Value** | |
| ? | |

## PATH Definitions

| ASN.1 Type Constraint Declaration | |
|---|---|
| **Constraint Name** | : PATHIndexType_Q |
| **Structured Type** | : PATHIndexType |
| **Derivation Path** | : |
| **Comments** | : |
| **Type Definition** | |
| ? | |


--`,,```,,,,````-`-`,,`,,`,`,,`---
Copyright International Organization for Standardization
Provided by IHS under license with ISO
No reproduction or networking permitted without license from IHS
Not for Resale

| ASN.1 Type Constraint Declaration | |
|---|---|
| **Constraint Name** | : PATHIndexType_01 |
| **Structured Type** | : PATHIndexType |
| **Derivation Path** | : |
| **Comments** | : |
| **Type Definition** | |
| '1'I -- primary | |

| ASN.1 Type Constraint Declaration | |
|---|---|
| **Constraint Name** | : PATHIndexType_02 |
| **Structured Type** | : PATHIndexType |
| **Derivation Path** | : |
| **Comments** | : |
| **Type Definition** | |
| '2'I -- secondary | |

| ASN.1 Type Constraint Declaration | |
|---|---|
| **Constraint Name** | : PATHMaxT_ReqType_Q |
| **Structured Type** | : PATHMaxT_ReqType |
| **Derivation Path** | : |
| **Comments** | : |
| **Type Definition** | |
| ? | |

| ASN.1 Type Constraint Declaration | |
|---|---|
| **Constraint Name** | : PATHRingLatencyType_Q |
| **Structured Type** | : PATHRingLatencyType |
| **Derivation Path** | : |
| **Comments** | : |
| **Type Definition** | |
| ? | |



Copyright International Organization for Standardization
Provided by IHS under license with ISO
No reproduction or networking permitted without license from IHS
Not for Resale

| ASN.1 Type Constraint Declaration | |
|---|---|
| **Constraint Name** | : PATHSbaAvailableType_Q |
| **Structured Type** | : PATHSbaAvailableType |
| **Derivation Path** | : |
| **Comments** | : |
| **Type Definition** | |
| ? | |

| ASN.1 Type Constraint Declaration | |
|---|---|
| **Constraint Name** | : PATHSbaPayloadType_Q |
| **Structured Type** | : PATHSbaPayloadType |
| **Derivation Path** | : |
| **Comments** | : |
| **Type Definition** | |
| ? | |

| ASN.1 Type Constraint Declaration | |
|---|---|
| **Constraint Name** | : PATHSbaOverheadType_Q |
| **Structured Type** | : PATHSbaOverheadType |
| **Derivation Path** | : |
| **Comments** | : |
| **Type Definition** | |
| ? | |

| ASN.1 Type Constraint Declaration | |
|---|---|
| **Constraint Name** | : PATHT_MaxLowerBoundType_Q |
| **Structured Type** | : PATHT_MaxLowerBoundType |
| **Derivation Path** | : |
| **Comments** | : |
| **Type Definition** | |
| ? | |


--`,,```,,,,````-`-`,,`,,`,`,,`---
Copyright International Organization for Standardization
Provided by IHS under license with ISO
No reproduction or networking permitted without license from IHS
Not for Resale

| ASN.1 Type Constraint Declaration | |
|---|---|
| **Constraint Name** | : PATHT_RmodeType_Q |
| **Structured Type** | : PATHT_RmodeType |
| **Derivation Path** | : |
| **Comments** | : |
| **Type Definition** | |
| ? | |

| ASN.1 Type Constraint Declaration | |
|---|---|
| **Constraint Name** | : PATHTraceStatusType_Q |
| **Structured Type** | : PATHTraceStatusType |
| **Derivation Path** | : |
| **Comments** | : |
| **Type Definition** | |
| ? | |

| ASN.1 Type Constraint Declaration | |
|---|---|
| **Constraint Name** | : PATHTraceStatusType_00 |
| **Structured Type** | : PATHTraceStatusType |
| **Derivation Path** | : |
| **Comments** | : |
| **Type Definition** | |
| '0000000000000001'B | -- trace initiated |

| ASN.1 Type Constraint Declaration | |
|---|---|
| **Constraint Name** | : PATHTraceStatusType_01 |
| **Structured Type** | : PATHTraceStatusType |
| **Derivation Path** | : |
| **Comments** | : |
| **Type Definition** | |
| '000000000000001?'B | -- trace propagated |

| ASN.1 Type Constraint Declaration | |
|---|---|
| **Constraint Name** | : PATHTraceStatusType_02 |
| **Structured Type** | : PATHTraceStatusType |
| **Derivation Path** | : |
| **Comments** | : |
| **Type Definition** | |
| '00000000000001??'B | -- trace terminated |



Copyright International Organization for Standardization
Provided by IHS under license with ISO
No reproduction or networking permitted without license from IHS
Not for Resale

| ASN.1 Type Constraint Declaration | |
|---|---|
| **Constraint Name** | : PATHTraceStatusType_03 |
| **Structured Type** | : PATHTraceStatusType |
| **Derivation Path** | : |
| **Comments** | : |
| **Type Definition** | |
| '0000000000001???'B | -- trace timeout |

| ASN.1 Type Constraint Declaration | |
|---|---|
| **Constraint Name** | : PATHTVXLowerBoundType_Q |
| **Structured Type** | : PATHTVXLowerBoundType |
| **Derivation Path** | : |
| **Comments** | : |
| **Type Definition** | |
| ? | |

## PORT Definitions

| ASN.1 Type Constraint Declaration | |
|---|---|
| **Constraint Name** | : PORTActionType_Q |
| **Structured Type** | : PORTActionType |
| **Derivation Path** | : |
| **Comments** | : |
| **Constraint Value** | |
| ? | |

| ASN.1 Type Constraint Declaration | |
|---|---|
| **Constraint Name** | : PORTActionType_00 |
| **Structured Type** | : PORTActionType |
| **Derivation Path** | : |
| **Comments** | : |
| **Constraint Value** | |
| '0000'I | -- signal PC_Maint |

| ASN.1 Type Constraint Declaration | |
|---|---|
| **Constraint Name** | : PORTActionType_01 |
| **Structured Type** | : PORTActionType |
| **Derivation Path** | : |
| **Comments** | : |
| **Constraint Value** | |
| '0001'I | -- signal PC_Enable |


--`,,```,,,,````-`-`,,`,,`,`,,`---
Copyright International Organization for Standardization
Provided by IHS under license with ISO
No reproduction or networking permitted without license from IHS
Not for Resale

| ASN.1 Type Constraint Declaration | |
|---|---|
| **Constraint Name** | **:** PORTActionType_02 |
| **Structured Type** | **:** PORTActionType |
| **Derivation Path** | **:** |
| **Comments** | **:** |
| **Constraint Value** | |
| ‘0002’I | -- signal PC_Disable |

| ASN.1 Type Constraint Declaration | |
|---|---|
| **Constraint Name** | **:** PORTActionType_03 |
| **Structured Type** | **:** PORTActionType |
| **Derivation Path** | **:** |
| **Comments** | **:** |
| **Constraint Value** | |
| ‘0003’I | -- signal PC_Start |

| ASN.1 Type Constraint Declaration | |
|---|---|
| **Constraint Name** | **:** PORTActionType_04 |
| **Structured Type** | **:** PORTActionType |
| **Derivation Path** | **:** |
| **Comments** | **:** |
| **Constraint Value** | |
| ‘0004’I | -- signal PC_Stop |

| ASN.1 Type Constraint Declaration | |
|---|---|
| **Constraint Name** | **:** PORTConnectionPoliciesType_Q |
| **Structured Type** | **:** PORTConnectPoliciesType |
| **Derivation Path** | **:** |
| **Comments** | **:** |
| **Constraint Value** | |
| ? | |

| ASN.1 Type Constraint Declaration | |
|---|---|
| **Constraint Name** | **:** PORTConnectionPoliciesType_00 |
| **Structured Type** | **:** PORTConnectPoliciesType |
| **Derivation Path** | **:** |
| **Comments** | **:** |
| **Constraint Value** | |
| ‘00000001’B | -- pc-mac-lct |

--`,,```,,,,````-`-`,,`,,`,`,,`---



Copyright International Organization for Standardization
Provided by IHS under license with ISO
No reproduction or networking permitted without license from IHS
Not for Resale

| ASN.1 Type Constraint Declaration | |
|---|---|
| **Constraint Name** | : PORTConnectionPoliciesType_01 |
| **Structured Type** | : PORTConnectPoliciesType |
| **Derivation Path** | : |
| **Comments** | : |
| **Constraint Value** | |
| ‘00000010’B | -- pc-mac-loop |

| ASN.1 Type Constraint Declaration | |
|---|---|
| **Constraint Name** | : PORTConnectStateType_Q |
| **Structured Type** | : PORTConnectStateType |
| **Derivation Path** | : |
| **Comments** | : |
| **Constraint Value** | |
| ? | |

| ASN.1 Type Constraint Declaration | |
|---|---|
| **Constraint Name** | : PORTConnectStateType_00 |
| **Structured Type** | : PORTConnectStateType |
| **Derivation Path** | : |
| **Comments** | : |
| **Constraint Value** | |
| ’0000’I | -- disabled |

| ASN.1 Type Constraint Declaration | |
|---|---|
| **Constraint Name** | : PORTConnectStateType_01 |
| **Structured Type** | : PORTConnectStateType |
| **Derivation Path** | : |
| **Comments** | : |
| **Constraint Value** | |
| ’0001’I | -- connecting |


Copyright International Organization for Standardization
Provided by IHS under license with ISO
No reproduction or networking permitted without license from IHS
Not for Resale

| ASN.1 Type Constraint Declaration | |
|---|---|
| **Constraint Name** | **:** PORTConnectStateType_02 |
| **Structured Type** | **:** PORTConnectStateType |
| **Derivation Path** | **:** |
| **Comments** | **:** |
| **Constraint Value** | |
| ‘0002’I | -- standby |

| ASN.1 Type Constraint Declaration | |
|---|---|
| **Constraint Name** | **:** PORTConnectStateType_03 |
| **Structured Type** | **:** PORTConnectStateType |
| **Derivation Path** | **:** |
| **Comments** | **:** |
| **Constraint Value** | |
| ‘0003’I | -- active |

| ASN.1 Type Constraint Declaration | | |
|---|---|---|
| **Constraint Name** | **:** PORTEBErrorDataType_Q | |
| **Structured Type** | **:** PORTEBErrorDataType | |
| **Derivation Path** | **:** | |
| **Comments** | **:** | |
| **Constraint Value** | | |
| { | conditionstate | CMNFlag_Q, |
| | eberrorcount | CMNCounter_Q} |

| ASN.1 Type Constraint Declaration | | |
|---|---|---|
| **Constraint Name** | **:** PORTLerDataType_Q | |
| **Structured Type** | **:** PORTLerDataType | |
| **Derivation Path** | **:** | |
| **Comments** | **:** | |
| **Constraint Value** | | |
| { | conditionstate | CMNFlag_Q, |
| | lertype | PORTLerType_Q } |



--`,,```,,,,````-`-`,,`,,`,`,,`---
Copyright International Organization for Standardization
Provided by IHS under license with ISO
No reproduction or networking permitted without license from IHS
Not for Resale

| ASN.1 Type Constraint Declaration | |
|---|---|
| **Constraint Name** | : PORTLerExponentType_Q |
| **Structured Type** | : PORTLerExponentType |
| **Derivation Path** | : |
| **Comments** | : |
| **Constraint Value** | |
| ? | |

| ASN.1 Type Constraint Declaration | | |
|---|---|---|
| **Constraint Name** | : PORTLerType_Q | |
| **Structured Type** | : PORTLerType | |
| **Derivation Path** | : | |
| **Comments** | : | |
| **Constraint Value** | | |
| { | lercutoff | PORTLerExponentType_Q, |
| | leralarm | PORTLerExponentType_Q, |
| | lerestimate | PORTLerExponentType_Q, |
| | lerrejectype | CMNCounter_Q, |
| | lerct | CMNCounter_Q} |

| ASN.1 Type Constraint Declaration | |
|---|---|
| **Constraint Name** | : PORTLineStateType_Q |
| **Structured Type** | : PORTLineStateType |
| **Derivation Path** | : |
| **Comments** | : |
| **Constraint Value** | |
| ? | |

| ASN.1 Type Constraint Declaration | |
|---|---|
| **Constraint Name** | : PORTLineStateType_00 |
| **Structured Type** | : PORTLineStateType |
| **Derivation Path** | : |
| **Comments** | : |
| **Constraint Value** | |
| '0000'l | -- quiet |


Copyright International Organization for Standardization
Provided by IHS under license with ISO
No reproduction or networking permitted without license from IHS
Not for Resale

| ASN.1 Type Constraint Declaration | |
|---|---|
| **Constraint Name** | **:** PORTLineStateType_01 |
| **Structured Type** | **:** PORTLineStateType |
| **Derivation Path** | **:** |
| **Comments** | **:** |
| **Constraint Value** | |
| ‘0001’I | -- idle |

| ASN.1 Type Constraint Declaration | |
|---|---|
| **Constraint Name** | **:** PORTLineStateType_02 |
| **Structured Type** | **:** PORTLineStateType |
| **Derivation Path** | **:** |
| **Comments** | **:** |
| **Constraint Value** | |
| ‘0002’I | -- master |

| ASN.1 Type Constraint Declaration | |
|---|---|
| **Constraint Name** | **:** PORTLineStateType_03 |
| **Structured Type** | **:** PORTLineStateType |
| **Derivation Path** | **:** |
| **Comments** | **:** |
| **Constraint Value** | |
| ‘0003’I | -- halt |

| ASN.1 Type Constraint Declaration | |
|---|---|
| **Constraint Name** | **:** PORTLineStateType_04 |
| **Structured Type** | **:** PORTLineStateType |
| **Derivation Path** | **:** |
| **Comments** | **:** |
| **Constraint Value** | |
| ‘0004’I | -- receive = active, transmit-PDR |



--`,,```,,,,````-`-`,,`,,`,`,,`---
Copyright International Organization for Standardization
Provided by IHS under license with ISO
No reproduction or networking permitted without license from IHS
Not for Resale

| ASN.1 Type Constraint Declaration | |
|---|---|
| **Constraint Name** | **:** PORTLineStateType_05 |
| **Structured Type** | **:** PORTLineStateType |
| **Derivation Path** | **:** |
| **Comments** | **:** |
| **Constraint Value** | |
| ‘0005’I | -- receive = unknown |

| ASN.1 Type Constraint Declaration | |
|---|---|
| **Constraint Name** | **:** PORTLineStateType_06 |
| **Structured Type** | **:** PORTLineStateType |
| **Derivation Path** | **:** |
| **Comments** | **:** |
| **Constraint Value** | |
| ‘0006’I | -- receive = noise |

| ASN.1 Type Constraint Declaration | |
|---|---|
| **Constraint Name** | **:** PORTMACIndicatedType_Q |
| **Structured Type** | **:** PORTMACIndicatedType |
| **Derivation Path** | **:** |
| **Comments** | **:** |
| **Constraint Value** | |
| { tval9 CMNFlag_Q,<br>rval9 CMNFlag_Q } | |

| ASN.1 Type Constraint Declaration | |
|---|---|
| **Constraint Name** | **:** PORTPathChangeDataType_Q |
| **Structured Type** | **:** PORTPathChangeDataType |
| **Derivation Path** | **:** |
| **Comments** | **:** |
| **Constraint Value** | |
| { multipleoccurrence CMNFlag_Q,<br>pathchangetype PORTPathChangeType_Q } | |


Copyright International Organization for Standardization
Provided by IHS under license with ISO
No reproduction or networking permitted without license from IHS
Not for Resale

| ASN.1 Type Constraint Declaration | |
|---|---|
| **Constraint Name** | : PORTPathChangeType_Q |
| **Structured Type** | : PORTPathChangeType |
| **Derivation Path** | : |
| **Comments** | : |

**Constraint Value**

```
{       availablepaths          CMNAvailablePathsType_Q,
        currentpath             CMNCurrentPathType_Q,
        requestedpaths          PORTRequestedPathsType_Q,
        mytype                  CMNPortType_Q,
        neighbortype            CMNPortType_Q       }
```

| ASN.1 Type Constraint Declaration | |
|---|---|
| **Constraint Name** | : PORTPCMStateType_Q |
| **Structured Type** | : PORTPCMStateType |
| **Derivation Path** | : |
| **Comments** | : |

**Constraint Value**

```
        ?
```

| ASN.1 Type Constraint Declaration | |
|---|---|
| **Constraint Name** | : PORTPCMStateType_00 |
| **Structured Type** | : PORTPCMStateType |
| **Derivation Path** | : |
| **Comments** | : |

**Constraint Value**

```
        '0000'I         -- Break
```

| ASN.1 Type Constraint Declaration | |
|---|---|
| **Constraint Name** | : PORTPCMStateType_01 |
| **Structured Type** | : PORTPCMStateType |
| **Derivation Path** | : |
| **Comments** | : |

**Constraint Value**

```
        '0001'I         -- Break
```



--`,,```,,,,````-`-`,,`,,`,`,,`---
Copyright International Organization for Standardization
Provided by IHS under license with ISO
No reproduction or networking permitted without license from IHS
Not for Resale

| ASN.1 Type Constraint Declaration | |
|---|---|
| **Constraint Name** | **:** PORTPCMStateType_02 |
| **Structured Type** | **:** PORTPCMStateType |
| **Derivation Path** | **:** |
| **Comments** | **:** |
| **Constraint Value** | |
| ‘0002’I | -- Trace |

| ASN.1 Type Constraint Declaration | |
|---|---|
| **Constraint Name** | **:** PORTPCMStateType_03 |
| **Structured Type** | **:** PORTPCMStateType |
| **Derivation Path** | **:** |
| **Comments** | **:** |
| **Constraint Value** | |
| ‘0003’I | -- Connect |

| ASN.1 Type Constraint Declaration | |
|---|---|
| **Constraint Name** | **:** PORTPCMStateType_04 |
| **Structured Type** | **:** PORTPCMStateType |
| **Derivation Path** | **:** |
| **Comments** | **:** |
| **Constraint Value** | |
| ‘0004’I | -- Next |

| ASN.1 Type Constraint Declaration | |
|---|---|
| **Constraint Name** | **:** PORTPCMStateType_05 |
| **Structured Type** | **:** PORTPCMStateType |
| **Derivation Path** | **:** |
| **Comments** | **:** |
| **Constraint Value** | |
| ‘0005’I | -- Signal |


Copyright International Organization for Standardization
Provided by IHS under license with ISO
No reproduction or networking permitted without license from IHS
Not for Resale

| ASN.1 Type Constraint Declaration | |
|---|---|
| **Constraint Name** | **:** PORTPCMStateType_06 |
| **Structured Type** | **:** PORTPCMStateType |
| **Derivation Path** | **:** |
| **Comments** | **:** |
| **Constraint Value** | |
| ‘0006’I | -- Join |

| ASN.1 Type Constraint Declaration | |
|---|---|
| **Constraint Name** | **:** PORTPCMStateType_07 |
| **Structured Type** | **:** PORTPCMStateType |
| **Derivation Path** | **:** |
| **Comments** | **:** |
| **Constraint Value** | |
| ‘007’I | -- Verify |

| ASN.1 Type Constraint Declaration | |
|---|---|
| **Constraint Name** | **:** PORTPCMStateType_08 |
| **Structured Type** | **:** PORTPCMStateType |
| **Derivation Path** | **:** |
| **Comments** | **:** |
| **Constraint Value** | |
| ‘0008’I | -- Active |

| ASN.1 Type Constraint Declaration | |
|---|---|
| **Constraint Name** | **:** PORTPCMStateType_09 |
| **Structured Type** | **:** PORTPCMStateType |
| **Derivation Path** | **:** |
| **Comments** | **:** |
| **Constraint Value** | |
| ‘0009’I | -- Maint |

--`,,```,,,,````-`-`,,`,,`,`,,`---



Copyright International Organization for Standardization
Provided by IHS under license with ISO
No reproduction or networking permitted without license from IHS
Not for Resale

| ASN.1 Type Constraint Declaration | |
|---|---|
| **Constraint Name** | **:** PORTPC_WithholdType_Q |
| **Structured Type** | **:** PORTPC_WithholdType |
| **Derivation Path** | **:** |
| **Comments** | **:** |
| **Constraint Value** | |
| ? | |

| ASN.1 Type Constraint Declaration | |
|---|---|
| **Constraint Name** | **:** PORTPC_WithholdType_00 |
| **Structured Type** | **:** PORTPC_WithholdType |
| **Derivation Path** | **:** |
| **Comments** | **:** |
| **Constraint Value** | |
| ‘0000’I | -- none |

| ASN.1 Type Constraint Declaration | |
|---|---|
| **Constraint Name** | **:** PORTPC_WithholdType_01 |
| **Structured Type** | **:** PORTPC_WithholdType |
| **Derivation Path** | **:** |
| **Comments** | **:** |
| **Constraint Value** | |
| ‘0001’I | -- m-m |

| ASN.1 Type Constraint Declaration | |
|---|---|
| **Constraint Name** | **:** PORTPC_WithholdType_02 |
| **Structured Type** | **:** PORTPC_WithholdType |
| **Derivation Path** | **:** |
| **Comments** | **:** |
| **Constraint Value** | |
| ‘0002’I | -- otherincompatible |


Copyright International Organization for Standardization
Provided by IHS under license with ISO
No reproduction or networking permitted without license from IHS
Not for Resale

| ASN.1 Type Constraint Declaration | |
|---|---|
| **Constraint Name** | **:** PORTPC_WithholdType_03 |
| **Structured Type** | **:** PORTPC_WithholdType |
| **Derivation Path** | **:** |
| **Comments** | **:** |
| **Constraint Value** | |
| ‘0003’I | -- pathnotavailable |

| ASN.1 Type Constraint Declaration | |
|---|---|
| **Constraint Name** | **:** PORTPMDClassType_Q |
| **Structured Type** | **:** PORTPMDClassType |
| **Derivation Path** | **:** |
| **Comments** | **:** |
| **Constraint Value** | |
| ? | |

| ASN.1 Type Constraint Declaration | |
|---|---|
| **Constraint Name** | **:** PORTPMDClassType_00 |
| **Structured Type** | **:** PORTPMDClassType |
| **Derivation Path** | **:** |
| **Comments** | **:** |
| **Constraint Value** | |
| ‘0000’I | -- multimode |

| ASN.1 Type Constraint Declaration | |
|---|---|
| **Constraint Name** | **:** PORTPMDClassType_01 |
| **Structured Type** | **:** PORTPMDClassType |
| **Derivation Path** | **:** |
| **Comments** | **:** |
| **Constraint Value** | |
| ‘0001’I | -- single mode1 |



Copyright International Organization for Standardization
Provided by IHS under license with ISO
No reproduction or networking permitted without license from IHS
Not for Resale

| ASN.1 Type Constraint Declaration | |
|---|---|
| **Constraint Name** | **:** PORTPMDClassType_02 |
| **Structured Type** | **:** PORTPMDClassType |
| **Derivation Path** | **:** |
| **Comments** | **:** |
| **Constraint Value** | |
| ‘0002’I | -- single mode2 |

| ASN.1 Type Constraint Declaration | |
|---|---|
| **Constraint Name** | **:** PORTPMDClassType_03 |
| **Structured Type** | **:** PORTPMDClassType |
| **Derivation Path** | **:** |
| **Comments** | **:** |
| **Constraint Value** | |
| ‘0003’I | -- sonet |

| ASN.1 Type Constraint Declaration | |
|---|---|
| **Constraint Name** | **:** PORTPMDClassType_04 |
| **Structured Type** | **:** PORTPMDClassType |
| **Derivation Path** | **:** |
| **Comments** | **:** |
| **Constraint Value** | |
| ‘0004’I | -- low cost fiber |

| ASN.1 Type Constraint Declaration | |
|---|---|
| **Constraint Name** | **:** PORTPMDClassType_05 |
| **Structured Type** | **:** PORTPMDClassType |
| **Derivation Path** | **:** |
| **Comments** | **:** |
| **Constraint Value** | |
| ‘0005’I | -- twisted-pair |


Copyright International Organization for Standardization
Provided by IHS under license with ISO
No reproduction or networking permitted without license from IHS
Not for Resale

| ASN.1 Type Constraint Declaration | |
|---|---|
| **Constraint Name** | : PORTPMDClassType_06 |
| **Structured Type** | : PORTPMDClassType |
| **Derivation Path** | : |
| **Comments** | : |
| **Constraint Value** | |
| ‘0006’I | -- unknown |

| ASN.1 Type Constraint Declaration | |
|---|---|
| **Constraint Name** | : PORTPMDClassType_07 |
| **Structured Type** | : PORTPMDClassType |
| **Derivation Path** | : |
| **Comments** | : |
| **Constraint Value** | |
| ‘0007’I | -- unspecified |

| ASN.1 Type Constraint Declaration | | |
|---|---|---|
| **Constraint Name** | : PORTRequestedPathsType_Q | |
| **Structured Type** | : PORTRequestedPathsType | |
| **Derivation Path** | : | |
| **Comments** | : | |
| **Constraint Value** | | |
| { | none | CMNPermittedPaths_Q, |
| | tree | CMNPermittedPaths_Q. |
| | peer | CMNPermittedPaths_Q } |

| ASN.1 Type Constraint Declaration | | |
|---|---|---|
| **Constraint Name** | : PORTUndesiredConnectionDataType_Q | |
| **Structured Type** | : PORTUndesiredConnectionDataType | |
| **Derivation Path** | : | |
| **Comments** | : | |
| **Constraint Value** | | |
| { | multipleoccurrence | CMNFlag_Q, |
| | undesiredconnectiontype | PORTUndesiredConnectionType_Q } |



Copyright International Organization for Standardization
Provided by IHS under license with ISO
No reproduction or networking permitted without license from IHS
Not for Resale

| ASN.1 Type Constraint Declaration | | | |
|---|---|---|---|
| **Constraint Name** | : PORTUndesiredConnectionType_Q | | |
| **Structured Type** | : PORTUndesiredConnectionType | | |
| **Derivation Path** | : | | |
| **Comments** | : | | |
| **Constraint Value** | | | |
| { | porttype | CMNPortType_Q, | |
| | connectstate | PORTConnectStateType_Q. | |
| | pcneighbor | CMNPortType_Q | |
| | pcwithhold | PORTPC_WithholdType_Q | } |

### 9.3.1.7 ASN.1 Type Constraint for SMT InfoField

#### 9.3.1.7.1 NIF Info Field Type Constraint Declaration

| ASN.1 Type Constraint Declaration | | | |
|---|---|---|---|
| **Constraint Name** | : NIF_TST_DATA | | |
| **Structured Type** | : NIF_Info | | |
| **Derivation Path** | : | | |
| **Comments** | : General form of NIF Info Field Parameters | | |
| **Constraint Value** | | | |
| { | UNA | UNA_UNKNOWN, | |
| | SD | StationDescriptor_01, | |
| | SS | StationState_01, | |
| | MAC_FS | MACFrameStatusFunctions_01 } | |

| ASN.1 Type Constraint Declaration | | | |
|---|---|---|---|
| **Constraint Name** | : NIF_TST_DATA01 | | |
| **Structured Type** | : NIF_Info | | |
| **Derivation Path** | : NIF_TST_DATA | | |
| **Comments** | : | | |
| **Constraint Value** | | | |
| REPLACE | UNA | BY | UNA_TESTER, |
| REPLACE | SD | BY | StationDescriptor_Q, |
| REPLACE | SS | BY | StationState_Q, |
| REPLACE | MAC_FS | BY | MACFrameStatusFunctions_01 |


Copyright International Organization for Standardization
Provided by IHS under license with ISO
No reproduction or networking permitted without license from IHS
Not for Resale

| ASN.1 Type Constraint Declaration | | | |
|---|---|---|---|
| **Constraint Name** : NIF_TST_DATA02<br>**Structured Type** : NIF_Info<br>**Derivation Path** : NIF_TST_DATA01<br>**Comments** : | | | |
| **Constraint Value** | | | |
| REPLACE | UNA | BY | UNA_UNKNOWN |

| ASN.1 Type Constraint Declaration | | | |
|---|---|---|---|
| **Constraint Name** : NIF_TST_DATA03<br>**Structured Type** : NIF_Info<br>**Derivation Path** : NIF_TST_DATA01<br>**Comments** : | | | |
| **Constraint Value** | | | |
| REPLACE | UNA | BY | UNA_IUT |

| ASN.1 Type Constraint Declaration | | | |
|---|---|---|---|
| **Constraint Name** : NIF_TST_DATA04<br>**Structured Type** : NIF_Info<br>**Derivation Path** : NIF_TST_DATA01<br>**Comments** : | | | |
| **Constraint Value** | | | |
| REPLACE | UNA | BY | UNA_TESTER2 |

#### 9.3.1.7.2 SIF Info Field Type Constraint Declaration

| ASN.1 Type Constraint Declaration | | |
|---|---|---|
| **Constraint Name** : SIF_CONF_DATA<br>**Structured Type** : SIFConf_Res<br>**Derivation Path** :<br>**Comments** : | | |
| **Constraint Value** | | |
| { | msgtimestamp | MsgTimeStamp_Q, |
| | stationdescriptor | StationDescriptor_Q, |
| | smtsupportedversions | SMTSupportedVersions_73, |
| | stationstatus | StationStatus_Q, |
| | stationpolicies | StationPolicies_Q, |
| | pathlatency | PathLatency_02, |
| | macneighbors | MACNeighbors_Q, |
| | pathdescriptor | PathDescriptor_Q, |
| | smtsetcount | SMTSetCount_Q } |



Copyright International Organization for Standardization
Provided by IHS under license with ISO
No reproduction or networking permitted without license from IHS
Not for Resale

| ASN.1 Type Constraint Declaration | | |
|---|---|---|
| **Constraint Name** | : | SIFOper_DATA |
| **Structured Type** | : | SIFOper_Res |
| **Derivation Path** | : | |
| **Comments** | : | |

| Constraint Value | | |
|---|---|---|
| { | msgtimestamp | MsgTimeStamp_Q, |
| | macstatus | MACStatus_Q, |
| | portlemstatus | PortLEMStatus_Q, |
| | macframecount | MACFrameCount_Q, |
| | macframenotcount | MACFrameNotCount_Q, |
| | macpriorityvalues | MACPriorityValue_Q, |
| | portebstatus | PortEBStatus_Q, |
| | manufacturerfield | ManufacturerField_Q, |
| | userfield | UserField_Q, |
| | smtsetcount | SMTSetCount_Q } |

#### 9.3.1.7.3 NO ECHO InfoField Type Constraint is defined!!

#### 9.3.1.7.4 RAF InfoField Type Constraint Declaration

| ASN.1 Type Constraint Declaration | | |
|---|---|---|
| **Constraint Name** | : | RequestAllocation_00 |
| **Structured Type** | : | SBARequest_Info |
| **Derivation Path** | : | |
| **Comments** | : | |

| Constraint Value | | |
|---|---|---|
| { | pathtype | PATHIndex_01, |
| | sbapayload | SBAPayloadRequest_Q, |
| | sbaoverhead | SBAOverheadRequest_Q, |
| | currentsbapayload | PATHSbaPayload_Q, |
| | currentsbaoverhead | PATHSbaOverhead_Q, |
| | allocationaddress | SBAAllocationAddress_TESTER, |
| | catagory | SBACatagory_Q, |
| | maxtneg | MaximumT_Neg_Q, |
| | minsbasegment | MinimumSBASegment_Q } |


Copyright International Organization for Standardization
Provided by IHS under license with ISO
No reproduction or networking permitted without license from IHS
Not for Resale

| ASN.1 Type Constraint Declaration | | |
|---|---|---|
| **Constraint Name** | : | RequestResponse_Q |
| **Structured Type** | : | SBARequest_Response |
| **Derivation Path** | : | |
| **Comments** | : | Allocation is successfully granted |

| Constraint Value | | |
|---|---|---|
| { | reasoncode | ReasonCode_03, |
| | pathtype | PATHIndex_Q, |
| | currentsbapayload | PATHSbaPayload_Q, |
| | currentsbaoverhead | PATHSbaOverhead_Q, |
| | allocationaddress | SBAAllocationAddress_Q, |
| | catagory | SBACatagory_Q, |
| | sbaallocatable | SBAAllocatable_Q } |

| ASN.1 Type Constraint Declaration | | |
|---|---|---|
| **Constraint Name** | : | RequestResponse_00 |
| **Structured Type** | : | SBARequest_Response |
| **Derivation Path** | : | |
| **Comments** | : | NULL SBA bandwidth |

| Constraint Value | | |
|---|---|---|
| { | reasoncode | ReasonCode_0D, |
| | pathtype | PATHIndex_01, |
| | currentsbapayload | PATHSbaPayload_MAX, |
| | currentsbaoverhead | PATHSbaOverhead_MAX, |
| | allocationaddress | SBAAllocationAddress_IUT, |
| | catagory | SBACatagory_Q, |
| | sbaallocatable | SBAAllocatable_00 } |

| ASN.1 Type Constraint Declaration | | |
|---|---|---|
| **Constraint Name** | : | RequestResponse_01 |
| **Structured Type** | : | SBARequest_Response |
| **Derivation Path** | : | |
| **Comments** | : | Allocation is denied for some reasons |

| Constraint Value | | |
|---|---|---|
| { | reasoncode | ReasonCode_Q, |
| | pathtype | PATHIndex_Q, |
| | currentsbapayload | PATHSbaPayload_Q, |
| | currentsbaoverhead | PATHSbaOverhead_00, |
| | allocationaddress | SBAAllocationAddress_Q, |
| | catagory | SBACatagory_Q, |
| | sbaallocatable | SBAAllocatable_Q } |



--`,,```,,,,````-`-`,,`,,`,`,,`---
Copyright International Organization for Standardization
Provided by IHS under license with ISO
No reproduction or networking permitted without license from IHS
Not for Resale

| ASN.1 Type Constraint Declaration | | |
|---|---|---|
| **Constraint Name** | : | ReportResponse_Q |
| **Structured Type** | : | SBAReport_Response |
| **Derivation Path** | : | |
| **Comments** | : | |

| Constraint Value | | |
|---|---|---|
| { | pathtype | PATHIndex_Q, |
| | currentsbapayload | PATHSbaPayload_Q, |
| | currentsbaoverhead | PATHSbaOverhead_Q, |
| | pathtype | PATHIndex_Q, |
| | currentsbapayload | PATHSbaPayload_Q, |
| | currentsbaoverhead | PATHSbaOverhead_Q } |

| ASN.1 Type Constraint Declaration | | |
|---|---|---|
| **Constraint Name** | : | ChangeRequest_Q |
| **Structured Type** | : | SBAChange_Info |
| **Derivation Path** | : | |
| **Comments** | : | |

| Constraint Value | | |
|---|---|---|
| { | pathtype | PATHIndex, |
| | newsbapayload | PATHSbaPayload_Q, |
| | newsbaoverhead | PATHSbaOverhead_Q, |
| | catagory | SBACatagory_Q } |

| ASN.1 Type Constraint Declaration | | |
|---|---|---|
| **Constraint Name** | : | ChangeResponse_Q |
| **Structured Type** | : | SBAChange_Response |
| **Derivation Path** | : | |
| **Comments** | : | |

| Constraint Value | | |
|---|---|---|
| { | pathtype | PATHIndex_Q, |
| | currentsbapayload | PATHSbaPayloadRequest_Q, |
| | currentsbaoverhead | PATHSbaOverheadPequest_Q, |
| | catagory | SBACatagory_Q } |


Copyright International Organization for Standardization
Provided by IHS under license with ISO
No reproduction or networking permitted without license from IHS
Not for Resale

### 9.3.1.7.5 RDF InfoField Type Constraint Declaration

| ASN.1 Type Constraint Declaration | | |
|---|---|---|
| **Constraint Name** | : | RDF_IUT_DATA |
| **Structured Type** | : | RDF_Info |
| **Derivation Path** | : | |
| **Comments** | : | General form of RDF |
| **Constraint Value** | | |
| { ReasonCode<br>SMTSupportedVersion<br>RejectedFrameBeginning | | ReasonCode_01,<br>SMTSupportedVersions_G1,<br>RejectedFrame_G1 } |

| ASN.1 Type Constraint Declaration | | |
|---|---|---|
| **Constraint Name** | : | RDF_IUT_DATA01 |
| **Structured Type** | : | RDF_Info |
| **Derivation Path** | : | RDF_IUT_DATA |
| **Comments** | : | Reason Code is ‘frame class not supported.’ |
| **Constraint Value** | | |
| OMIT RejectedFrameBeginning | | |

| ASN.1 Type Constraint Declaration | | |
|---|---|---|
| **Constraint Name** | : | RDF_IUT_DATA02 |
| **Structured Type** | : | RDF_Info |
| **Derivation Path** | : | RDF_IUT_DATA01 |
| **Comments** | : | Reason code is ‘frame version not supported.’ |
| **Constraint Value** | | |
| REPLACE ReasonCode BY ReasonCode_02 | | |

| ASN.1 Type Constraint Declaration | | |
|---|---|---|
| **Constraint Name** | : | RDF_IUT_DATA03 |
| **Structured Type** | : | RDF_Info |
| **Derivation Path** | : | RDF_IUT_DATA01 |
| **Comments** | : | Reason code is ‘success.’ |
| **Constraint Value** | | |
| REPLACE ReasonCode BY ReasonCode_03<br>OMIT SMTSupportedVersion | | |



Copyright International Organization for Standardization
Provided by IHS under license with ISO
No reproduction or networking permitted without license from IHS
Not for Resale

| ASN.1 Type Constraint Declaration | |
|---|---|
| **Constraint Name** | : RDF_IUT_DATA04 |
| **Structured Type** | : RDF_Info |
| **Derivation Path** | : RDF_IUT_DATA01 |
| **Comments** | : Reason code is ‘bad set count.’ |
| **Constraint Value** | |
| REPLACE ReasonCode BY ReasonCode_04 | |

| ASN.1 Type Constraint Declaration | |
|---|---|
| **Constraint Name** | : RDF_IUT_DATA05 |
| **Structured Type** | : RDF_Info |
| **Derivation Path** | : RDF_IUT_DATA01 |
| **Comments** | : Reason code is ‘illegal operation.’ |
| **Constraint Value** | |
| REPLACE ReasonCode BY ReasonCode_05 | |

| ASN.1 Type Constraint Declaration | |
|---|---|
| **Constraint Name** | : RDF_IUT_DATA06 |
| **Structured Type** | : RDF_Info |
| **Derivation Path** | : RDF_IUT_DATA01 |
| **Comments** | : Reason code is ‘no parameter.’ |
| **Constraint Value** | |
| REPLACE ReasonCode BY ReasonCode_06 | |

| ASN.1 Type Constraint Declaration | |
|---|---|
| **Constraint Name** | : RDF_IUT_DATA08 |
| **Structured Type** | : RDF_Info |
| **Derivation Path** | : RDF_IUT_DATA01 |
| **Comments** | : Reason code is ‘out of range.’ |
| **Constraint Value** | |
| REPLACE ReasonCode BY ReasonCode_08 | |

| ASN.1 Type Constraint Declaration | |
|---|---|
| **Constraint Name** | : RDF_IUT_DATA09 |
| **Structured Type** | : RDF_Info |
| **Derivation Path** | : RDF_IUT_DATA01 |
| **Comments** | : Reason code is ‘not authorized.’ |
| **Constraint Value** | |
| REPLACE ReasonCode BY ReasonCode_09 | |


Copyright International Organization for Standardization
Provided by IHS under license with ISO
No reproduction or networking permitted without license from IHS
Not for Resale

| ASN.1 Type Constraint Declaration | | | |
|---|---|---|---|
| **Constraint Name** | : RDF_IUT_DATA0A | | |
| **Structured Type** | : RDF_Info | | |
| **Derivation Path** | : RDF_IUT_DATA01 | | |
| **Comments** | : Reason code is ‘length error.’ | | |
| **Constraint Value** | | | |
| REPLACE | ReasonCode | BY | ReasonCode_0A |

| ASN.1 Type Constraint Declaration | | | |
|---|---|---|---|
| **Constraint Name** | : RDF_IUT_DATA0B | | |
| **Structured Type** | : RDF_Info | | |
| **Derivation Path** | : RDF_IUT_DATA01 | | |
| **Comments** | : Reason code is ‘frame too long.’ | | |
| **Constraint Value** | | | |
| REPLACE | ReasonCode | BY | ReasonCode_0B |

| ASN.1 Type Constraint Declaration | | | |
|---|---|---|---|
| **Constraint Name** | : RDF_IUT_DATA0D | | |
| **Structured Type** | : RDF_Info | | |
| **Derivation Path** | : RDF_IUT_DATA01 | | |
| **Comments** | : Reason code is ‘sba denied.’ | | |
| **Constraint Value** | | | |
| REPLACE | ReasonCode | BY | ReasonCode_0D |

#### 9.3.1.7.6 ESF InfoField Type Constraint Declaration

| ASN.1 Type Constraint Declaration | | |
|---|---|---|
| **Constraint Name** | : ESF_DATA | |
| **Structured Type** | : ESF_Info | |
| **Derivation Path** | : | |
| **Comments** | : | |
| **Constraint Value** | | |
| { ESF_ID | ESFID_Q, | |
| OTHER | OTHER_Q } | |



Copyright International Organization for Standardization
Provided by IHS under license with ISO
No reproduction or networking permitted without license from IHS
Not for Resale

#### 9.3.1.7.7 SRF InfoField Type Constraint Declaration

| ASN.1 Type Constraint Declaration | | |
|---|---|---|
| **Constraint Name** | : | SRF_DATA |
| **Structured Type** | : | SRF_Info |
| **Derivation Path** | : | |
| **Comments** | : | |

| Constraint Value | | |
|---|---|---|
| { | TimeStamp | SMTTimeStamp_Q, |
| | Transition_TimeStamp | SMTTransitionTimeStamp_Q, |
| | EventCondition | TBD } |

#### 9.3.1.7.8 PMF InfoField Type Constraint Declaration

| ASN.1 Type Constraint Declaration | | |
|---|---|---|
| **Constraint Name** | : | PMFGet_Response_BASE |
| **Structured Type** | : | PMFGetResponse_INFO |
| **Derivation Path** | : | |
| **Comments** | : | |

| Constraint Value | | |
|---|---|---|
| { | reasoncode | ReasonCode_Q, |
| | timestamp | SMTTimeStamp_Q, |
| | setcount | SMTSetCount_Q, |
| | lastsetstationid | SMTLastSetStationID_Q, |
| | getresponseinfo? | |

| ASN.1 Type Constraint Declaration | | |
|---|---|---|
| **Constraint Name** | : | PMF_IUT_Get_Res_01 |
| **Structured Type** | : | PMFGetResponse_INFO |
| **Derivation Path** | : | PMFGet_Response_BASE |
| **Comments** | : | fddiSMTStationId |

| Constraint Value | | | |
|---|---|---|---|
| REPLACE | reasoncode | BY | ReasonCode_03, |
| REPLACE | getresponseinfo | BY | SMTStationId_01 |


Copyright International Organization for Standardization
Provided by IHS under license with ISO
No reproduction or networking permitted without license from IHS
Not for Resale

| ASN.1 Type Constraint Declaration | | | |
|---|---|---|---|
| **Constraint Name** | : PMF_IUT_Get_Res_02 | | |
| **Structured Type** | : PMFGetResponse_INFO | | |
| **Derivation Path** | : PMFGet_Response_BASE | | |
| **Comments** | : fddiSMTOpVersionId | | |
| **Constraint Value** | | | |
| REPLACE | reasoncode | BY | ReasonCode_03, |
| REPLACE | getresponseinfo | BY | SMTOpVersionId_01 |

| ASN.1 Type Constraint Declaration | | | |
|---|---|---|---|
| **Constraint Name** | : PMF_IUT_Get_Res_03 | | |
| **Structured Type** | : PMFGetResponse_INFO | | |
| **Derivation Path** | : PMFGet_Response_BASE | | |
| **Comments** | : | | |
| **Constraint Value** | | | |
| REPLACE | reasoncode | BY | ReasonCode_03, |
| REPLACE | getresponseinfo | BY | SMTHiVersionId_01 |

| ASN.1 Type Constraint Declaration | | | |
|---|---|---|---|
| **Constraint Name** | : PMF_IUT_Get_Res_04 | | |
| **Structured Type** | : PMFGetResponse_INFO | | |
| **Derivation Path** | : PMFGet_Response_BASE | | |
| **Comments** | : | | |
| **Constraint Value** | | | |
| REPLACE | getresponseinfo | BY | SMTLoVersionId_01 |

| ASN.1 Type Constraint Declaration | | | |
|---|---|---|---|
| **Constraint Name** | : PMF_IUT_Get_Res_05 | | |
| **Structured Type** | : PMFGetResponse_INFO | | |
| **Derivation Path** | : PMFGet_Response_BASE | | |
| **Comments** | : | | |
| **Constraint Value** | | | |
| REPLACE | reasoncode | BY | ReasonCode_03, |
| REPLACE | getresponseinfo | BY | MACDownstreamNbr_01 |



Copyright International Organization for Standardization
Provided by IHS under license with ISO
No reproduction or networking permitted without license from IHS
Not for Resale

| ASN.1 Type Constraint Declaration | | | |
|---|---|---|---|
| **Constraint Name** | : PMF_IUT_Get_Res_06 | | |
| **Structured Type** | : PMFGetResponse_INFO | | |
| **Derivation Path** | : PMFGet_Response_BASE | | |
| **Comments** | : | | |
| **Constraint Value** | | | |
| REPLACE | reasoncode | BY | ReasonCode_03, |
| REPLACE | getresponseinfo | BY | MACOldDownstreamNbr_01 |

| ASN.1 Type Constraint Declaration | | | |
|---|---|---|---|
| **Constraint Name** | : PMF_IUT_Get_Res_08.5 | | |
| **Structured Type** | : PMFGetResponse_INFO | | |
| **Derivation Path** | : PMFGet_Response_BASE | | |
| **Comments** | : | | |
| **Constraint Value** | | | |
| REPLACE | reasoncode | BY | ReasonCode_03, |
| REPLACE | getresponseinfo | BY | ValidMultiple_Pmf_00 |

| ASN.1 Type Constraint Declaration | | | |
|---|---|---|---|
| **Constraint Name** | : PMF_IUT_Get_Res_09.5 | | |
| **Structured Type** | : PMFGetResponse_INFO | | |
| **Derivation Path** | : PMFGet_Response_BASE | | |
| **Comments** | : | | |
| **Constraint Value** | | | |
| REPLACE | reasoncode | BY | ReasonCode_03, |
| REPLACE | getresponseinfo | BY | ValidMultipleGrp_Pmf_00 |

| ASN.1 Type Constraint Declaration | | | |
|---|---|---|---|
| **Constraint Name** | : PMF_IUT_Get_Res_0A.5 | | |
| **Structured Type** | : PMFGetResponse_INFO | | |
| **Derivation Path** | : PMFGet_Response_BASE | | |
| **Comments** | : | | |
| **Constraint Value** | | | |
| REPLACE | reasoncode | BY | ReasonCode_03, |
| REPLACE | getresponseinfo | BY | InvalidMultipleGrp_Pmf_00 |


Copyright International Organization for Standardization
Provided by IHS under license with ISO
No reproduction or networking permitted without license from IHS
Not for Resale

| ASN.1 Type Constraint Declaration | |
|---|---|
| **Constraint Name** | : PMFSetRequest_Q |
| **Structured Type** | : PMFSetRequest_INFO |
| **Derivation Path** | : |
| **Comments** | : |
| **Constraint Value** | |
| { authorization<br>setcount<br>setrequestinfo | Authorization_Q,<br>SMTSetCount_Q,<br>? } |

| ASN.1 Type Constraint Declaration | |
|---|---|
| **Constraint Name** | : PMFSetResponse_Q |
| **Structured Type** | : PMFSetResponse_INFO |
| **Derivation Path** | : |
| **Comments** | : |
| **Constraint Value** | |
| | |

#### 9.3.1.7.9 ERROR InfoField Type Constraint Declaration

| ASN.1 Type Constraint Declaration | |
|---|---|
| **Constraint Name** | : |
| **Structured Type** | : |
| **Derivation Path** | : |
| **Comments** | : |
| **Constraint Value** | |
| | |

| ASN.1 Type Constraint Declaration | |
|---|---|
| **Constraint Name** | : |
| **Structured Type** | : |
| **Derivation Path** | : |
| **Comments** | : |
| **Constraint Value** | |
| | |



--`,,```,,,,````-`-`,,`,,`,`,,`---
Copyright International Organization for Standardization
Provided by IHS under license with ISO
No reproduction or networking permitted without license from IHS
Not for Resale

### 9.3.2 ASN.1 PDU Constraint Declarations

#### 9.3.2.1 NIF PDU Constraint Declaration

| ASN.1 PDU Constraint Declaration | |
|---|---|
| **Constraint Name** | : NIF_TST_Req |
| **PDU Type** | : NIF_Frame |
| **Derivation Path** | : |
| **Comments** | : General NIF Request Frame for tester. |

| Constraint Value | | |
|---|---|---|
| { | SD | JK, |
| | FC | ? |
| | DA | IUT_ADDRESS, |
| | SA | TESTER_ADDRESS, |
| | Frame_Class | ‘01’H, |
| | Frame_Type | ‘02’H, |
| | Version_ID | ‘0001’H, |
| | Transaction_ID | ‘00000010’H, |
| | Station_ID1 | ‘0000’H, |
| | Station_ID2 | TESTER_ADDRESS, |
| | PAD | ‘0000’H, |
| | InfoField_Length | ‘0028’H, |
| | Info | NIF_TST_DATA, |
| | FCS | ? |
| | ED | T |
| | FS_E | RESET, |
| | FS_A | RESET, |
| | FS_C | RESET, |
| | FS_2 | -, |
| | FS_T | T } |

| ASN.1 PDU Constraint Declaration | |
|---|---|
| **Constraint Name** | : NIF_TST_Req_01 |
| **PDU Type** | : NIF_Frame |
| **Derivation Path** | : NIF_TST_Req |
| **Comments** | : Valid NIF Request Frame |

| Constraint Value | | | |
|---|---|---|---|
| REPLACE | FC | BY | ‘4F’H |


Copyright International Organization for Standardization
Provided by IHS under license with ISO
No reproduction or networking permitted without license from IHS
Not for Resale

| ASN.1 PDU Constraint Declaration | | | | |
|---|---|---|---|---|
| **Constraint Name** | : NIF_TST_Req_02 | | | |
| **PDU Type** | : NIF_Frame | | | |
| **Derivation Path** | : NIF_TST_Req_01 | | | |
| **Comments** | : Invalid Frame Class | | | |
| **Constraint Value** | | | | |
| REPLACE | Frame_Class | BY | ‘10’H, | -- invalid frame class |
| REPLACE | Transaction_ID | BY | ‘00000011’H | |

| ASN.1 PDU Constraint Declaration | | | |
|---|---|---|---|
| **Constraint Name** | : NIF_TST_Req_03 | | |
| **PDU Type** | : NIF_Frame | | |
| **Derivation Path** | : NIF_TST_Req | | |
| **Comments** | : To see if the IUT can respond to a NIF Request frame with FC= ‘41’H. | | |
| **Constraint Value** | | | |
| REPLACE | FC | BY | ‘41’H, |
| REPLACE | Transaction_ID | BY | ‘00000012’H |

| ASN.1 PDU Constraint Declaration | | | |
|---|---|---|---|
| **Constraint Name** | : InvalidVersion_01 | | |
| **PDU Type** | : ERROR_Frame | | |
| **Derivation Path** | : NIF_TST_Req_01 | | |
| **Comments** | : Invalid Version_ID. | | |
| **Constraint Value** | | | |
| REPLACE | Version_ID | BY | ‘0002’H, |
| REPLACE | Transaction_ID | BY | ‘00000013’H |

| ASN.1 PDU Constraint Declaration | | | |
|---|---|---|---|
| **Constraint Name** | : NIF_TST_Req_05 | | |
| **PDU Type** | : NIF_Frame | | |
| **Derivation Path** | : NIF_TST_Req_01 | | |
| **Comments** | : Invalid Version_ID. | | |
| **Constraint Value** | | | |
| REPLACE | Frame_Type | BY | ‘0004’H, |
| REPLACE | Transaction_ID | BY | ‘00000014’H |



Copyright International Organization for Standardization
Provided by IHS under license with ISO
No reproduction or networking permitted without license from IHS
Not for Resale

| ASN.1 PDU Constraint Declaration | | | |
|---|---|---|---|
| **Constraint Name** | : NIF_TST_Req_06 | | |
| **PDU Type** | : NIF_Frame | | |
| **Derivation Path** | : NIF_TST_Req_01 | | |
| **Comments** | : Tester changes its address | | |
| **Constraint Value** | | | |
| REPLACE | SA | BY | TESTER_ADDRESS2, |
| REPLACE | Transaction_ID | BY | ‘00000015’H |

| ASN.1 PDU Constraint Declaration | | | |
|---|---|---|---|
| **Constraint Name** | : NIF_TST_Ann_01 | | |
| **PDU Type** | : NIF_Frame | | |
| **Derivation Path** | : NIF_TST_Req | | |
| **Comments** | : Valid NIF Announcement Frame | | |
| **Constraint Value** | | | |
| REPLACE | FC | BY | ‘4F’H, |
| REPLACE | DA | BY | Broadcast, |
| REPLACE | Frame_Type | BY | ‘01’H, |
| REPLACE | Transaction_ID | BY | ‘00000016’H |

| ASN.1 PDU Constraint Declaration | | | |
|---|---|---|---|
| **Constraint Name** | : NIF_TST_Ann_02 | | |
| **PDU Type** | : NIF_Frame | | |
| **Derivation Path** | : NIF_TST_Ann_01 | | |
| **Comments** | : acknowledged frame of NIF_TST_Ann_01 from the IUT | | |
| **Constraint Value** | | | |
| REPLACE | FS_A | BY | SET, |
| REPLACE | FS_C | BY | SET |


Copyright International Organization for Standardization
Provided by IHS under license with ISO
No reproduction or networking permitted without license from IHS
Not for Resale

| ASN.1 PDU Constraint Declaration | | | |
|---|---|---|---|
| **Constraint Name** | : NIF_IUT_Req_01 | | |
| **PDU Type** | : NIF_Frame | | |
| **Derivation Path** | : NIF_TST_Req | | |
| **Comments** | : | | |
| **Constraint Value** | | | |
| REPLACE | FC | BY | ‘4F’H |
| REPLACE | DA | BY | TESTER_ADDRESS, |
| REPLACE | SA | BY | IUT_ADDRESS, |
| REPLACE | Transaction_ID | BY | ?, |
| REPLACE | Station_ID1 | BY | ?, |
| REPLACE | Station_ID2 | BY | IUT_ADDRESS |
| REPLACE | Info | BY | NIF_TST_DATA02 |

| ASN.1 PDU Constraint Declaration | | | |
|---|---|---|---|
| **Constraint Name** | : NIF_IUT_Req_02 | | |
| **PDU Type** | : NIF_Frame | | |
| **Derivation Path** | : NIF_IUT_Req_01 | | |
| **Comments** | : | | |
| **Constraint Value** | | | |
| REPLACE | Info | BY | NIF_TST_DATA01 |

| ASN.1 PDU Constraint Declaration | | | |
|---|---|---|---|
| **Constraint Name** | : NIF_IUT_Req_03 | | |
| **PDU Type** | : NIF_Frame | | |
| **Derivation Path** | : NIF_IUT_Req_02 | | |
| **Comments** | : To see if the IUT can generate a NIF frame with FC = ‘41’H. | | |
| **Constraint Value** | | | |
| REPLACE | FC | BY | ‘41’H |

| ASN.1 PDU Constraint Declaration | | | |
|---|---|---|---|
| **Constraint Name** | : NIF_IUT_Req_04 | | |
| **PDU Type** | : NIF_Frame | | |
| **Derivation Path** | : NIF_IUT_Req_03 | | |
| **Comments** | : | | |
| **Constraint Value** | | | |
| REPLACE | Info | BY | NIF_TST_DATA01 |



Copyright International Organization for Standardization
Provided by IHS under license with ISO
No reproduction or networking permitted without license from IHS
Not for Resale

| ASN.1 PDU Constraint Declaration | | | |
|---|---|---|---|
| **Constraint Name** | **:** NIF_IUT_Ann01 | | |
| **PDU Type** | **:** NIF_Frame | | |
| **Derivation Path** | **:** NIF_IUT_Req01 | | |
| **Comments** | **:** | | |
| **Constraint Value** | | | |
| REPLACE | DA | BY | Broadcast, |
| REPLACE | Frame_Type | BY | ‘01’H |
| REPLACE | Info | BY | NIF_TST_DATA01 |

| ASN.1 PDU Constraint Declaration | | | |
|---|---|---|---|
| **Constraint Name** | **:** NIF_TST_Res_01 | | |
| **PDU Type** | **:** NIF_Frame | | |
| **Derivation Path** | **:** NIF_IUT_Req_01 | | |
| **Comments** | **:** | | |
| **Constraint Value** | | | |
| REPLACE | DA | BY | IUT_ADDRESS, |
| REPLACE | SA | BY | TESTER_ADDRESS, |
| REPLACE | Frame_Type | BY | ‘03’H, |
| REPLACE | Station_ID1 | BY | ‘0000’H, |
| REPLACE | Station_ID2 | BY | TESTER_ADDRESS |
| REPLACE | Info | BY | NIF_TST_DATA03 |

| ASN.1 PDU Constraint Declaration | | | |
|---|---|---|---|
| **Constraint Name** | **:** NIF_TST_Res_02 | | |
| **PDU Type** | **:** NIF_Frame | | |
| **Derivation Path** | **:** NIF_TST_Res_01 | | |
| **Comments** | **:** | | |
| **Constraint Value** | | | |
| REPLACE | FC | BY | ‘41’F |

--`,,```,,,,````-`-`,,`,,`,`,,`---



Copyright International Organization for Standardization
Provided by IHS under license with ISO
No reproduction or networking permitted without license from IHS
Not for Resale

| ASN.1 PDU Constraint Declaration | | | | |
|---|---|---|---|---|
| **Constraint Name** | **:** NIF_IUT_Res_01 | | | |
| **PDU Type** | **:** NIF_Frame | | | |
| **Derivation Path** | **:** NIF_TST_Req_01 | | | |
| **Comments** | **:** | | | |
| **Constraint Value** | | | | |
| REPLACE | DA | BY | TESTER_ADDRESS, | |
| REPLACE | SA | BY | IUT_ADDRESS, | |
| REPLACE | Frame_Type | BY | '03'H | |
| REPLACE | Station_ID1 | BY | ?, | |
| REPLACE | Station_ID2 | BY | IUT_ADDRESS, | |
| REPLACE | Info | BY | NIF_TST_DATA01, | |
| REPLACE | FS_A | BY | SET, | |
| REPLACE | FS_C | BY | SET | |

| ASN.1 PDU Constraint Declaration | | | | |
|---|---|---|---|---|
| **Constraint Name** | **:** NIF_IUT_Res_02 | | | |
| **PDU Type** | **:** NIF_Frame | | | |
| **Derivation Path** | **:** NIF_IUT_Res_01 | | | |
| **Comments** | **:** | | | |
| **Constraint Value** | | | | |
| REPLACE | Frame_Class | BY | '10'H | --invalid frame class |

| ASN.1 PDU Constraint Declaration | | | |
|---|---|---|---|
| **Constraint Name** | **:** NIF_IUT_Res_03 | | |
| **PDU Type** | **:** NIF_Frame | | |
| **Derivation Path** | **:** NIF_IUT_Res_01 | | |
| **Comments** | **:** | | |
| **Constraint Value** | | | |
| REPLACE | Info | BY | NIF_TST_DATA |

| ASN.1 PDU Constraint Declaration | | | |
|---|---|---|---|
| **Constraint Name** | **:** NIF_IUT_Res_04 | | |
| **PDU Type** | **:** NIF_Frame | | |
| **Derivation Path** | **:** NIF_IUT_Res_01 | | |
| **Comments** | **:** Response to the changed tester address | | |
| **Constraint Value** | | | |
| REPLACE | DA | BY | TESTER_ADDRESS2 |
| REPLACE | Info | BY | NIF_TST_DATA04 |

--`,,```,,,,````-`-`,,`,,`,`,,`---



Copyright International Organization for Standardization
Provided by IHS under license with ISO
No reproduction or networking permitted without license from IHS
Not for Resale

### 9.3.2.2 SIF PDU Constraint Declaration

| ASN.1 PDU Constraint Declaration | | |
|---|---|---|
| **Constraint Name** | **:** | SIF_CONF_Req_Q |
| **PDU Type** | **:** | SIF_Frame |
| **Derivation Path** | **:** | |
| **Comments** | **:** | |

| Constraint Value | | |
|---|---|---|
| { | SD | JK, |
| | FC | ?, |
| | DA | ?, |
| | SA | ?, |
| | Frame_Class | ‘02’H, |
| | Frame_Type | ‘02’H, |
| | Version_ID | ‘0001’H, |
| | Transaction_ID | ?, |
| | Station_ID1 | ?, |
| | Station_ID2 | ?, |
| | PAD | PAD_2, |
| | InfoField_Length | ‘0000’H, |
| | sifrequest | -, |
| | FCS | ?, |
| | ED | T, |
| | FS_E | RESET, |
| | FS_A | RESET, |
| | FS_C | RESET, |
| | FS_2 | -, |
| | FS_T | T } |

| ASN.1 PDU Constraint Declaration | | |
|---|---|---|
| **Constraint Name** | **:** | SIF_CONF_Req_IUT |
| **PDU Type** | **:** | SIF_Frame |
| **Derivation Path** | **:** | SIF_CONF_Req_Q |
| **Comments** | **:** | |

| Constraint Value | | | |
|---|---|---|---|
| REPLACE | DA | BY | TESTER_ADDRESS, |
| REPLACE | SA | BY | IUT_ADDRESS, |
| REPLACE | Station_ID2 | BY | IUT_ADDRESS |


Copyright International Organization for Standardization
Provided by IHS under license with ISO
No reproduction or networking permitted without license from IHS
Not for Resale

| ASN.1 PDU Constraint Declaration | | | |
|---|---|---|---|
| **Constraint Name** | : SIF_CONF_Req_01 | | |
| **PDU Type** | : SIF_Frame | | |
| **Derivation Path** | : SIF_CONF_Req_Q | | |
| **Comments** | : | | |
| **Constraint Value** | | | |
| REPLACE | FC | BY | ‘4F’H, |
| REPLACE | DA | BY | IUT_ADDRESS, |
| REPLACE | SA | BY | TESTER_ADDRESS, |
| REPLACE | Transaction_ID | BY | ‘00000021’H, |
| REPLACE | Station_ID1 | BY | ‘0000’H, |
| REPLACE | Station_ID2 | BY | TESTER_ADDRESS |

| ASN.1 PDU Constraint Declaration | | | |
|---|---|---|---|
| **Constraint Name** | : SIF_CONF_Req_02 | | |
| **PDU Type** | : SIF_Frame | | |
| **Derivation Path** | : SIF_CONF_Req_Q | | |
| **Comments** | : To see if the IUT responses to FC = ‘41’H | | |
| **Constraint Value** | | | |
| REPLACE | FC | BY | ‘41’H, |
| REPLACE | Transaction_ID | BY | ‘00000022’H |

| ASN.1 PDU Constraint Declaration | | | |
|---|---|---|---|
| **Constraint Name** | : SIF_CONF_Res_01 | | |
| **PDU Type** | : SIF_Frame | | |
| **Derivation Path** | : | | |
| **Comments** | : | | |
| **Constraint Value** | | | |
| REPLACE | FC | BY | ‘41’H, |
| REPLACE | DA | BY | TESTER_ADDRESS, |
| REPLACE | SA | BY | IUT_ADDRESS, |
| REPLACE | Transaction_ID | BY | ‘00000021’H, |
| REPLACE | Station_ID1 | BY | ?, |
| REPLACE | Station_ID2 | BY | IUT_ADDRESS |
| REPLACE | InfoField_Length | BY | ‘’..’’H, |
| REPLACE | sifresponse | by | SIF_CONF_DATA |



Copyright International Organization for Standardization
Provided by IHS under license with ISO
No reproduction or networking permitted without license from IHS
Not for Resale

| ASN.1 PDU Constraint Declaration | | | |
|---|---|---|---|
| **Constraint Name** | **:** SIF_CONF_Res_02 | | |
| **PDU Type** | **:** SIF_Frame | | |
| **Derivation Path** | **:** SIF_CONF_Res_01 | | |
| **Comments** | **:** | | |
| **Constraint Value** | | | |
| REPLACE | Transaction_ID | BY | ‘00000022’H |

| ASN.1 PDU Constraint Declaration | | | |
|---|---|---|---|
| **Constraint Name** | **:** SIF_OPER_Req_01 | | |
| **PDU Type** | **:** SIF_Frame | | |
| **Derivation Path** | **:** SIF_CONF_Req_01 | | |
| **Comments** | **:** | | |
| **Constraint Value** | | | |
| REPLACE | FrameType | BY | ‘03’H, |
| REPLACE | Transaction_ID | BY | ‘00000023’H |

| ASN.1 PDU Constraint Declaration | | | |
|---|---|---|---|
| **Constraint Name** | **:** SIF_OPER_Req_02 | | |
| **PDU Type** | **:** SIF_Frame | | |
| **Derivation Path** | **:** SIF_OPER_Req_01 | | |
| **Comments** | **:** To see if the IUT responses to FC = ‘41’H | | |
| **Constraint Value** | | | |
| REPLACE | FC | BY | ‘41’H, |
| REPLACE | Transaction_ID | BY | ‘00000024’H |

| ASN.1 PDU Constraint Declaration | | | |
|---|---|---|---|
| **Constraint Name** | **:** SIF_OPER_Res_01 | | |
| **PDU Type** | **:** SIF_Frame | | |
| **Derivation Path** | **:** SIF_CONF_Res_01 | | |
| **Comments** | **:** | | |
| **Constraint Value** | | | |
| REPLACE | Transaction_ID | BY | ‘00000023’H, |
| REPLACE | Station_ID1 | BY | ?, |
| REPLACE | Station_ID2 | BY | IUT_ADDRESS |
| REPLACE | InfoField_Length | BY | ‘’..’’H, |
| REPLACE | sifresponse | by | SIF_OPER_DATA |


Copyright International Organization for Standardization
Provided by IHS under license with ISO
No reproduction or networking permitted without license from IHS
Not for Resale

| ASN.1 PDU Constraint Declaration | |
|---|---|
| **Constraint Name** | : SIF_OPER_Res_02 |
| **PDU Type** | : SIF_Frame |
| **Derivation Path** | : SIF_OPER_Res_01 |
| **Comments** | : |
| **Constraint Value** | |
| REPLACE Transaction_ID BY ‘00000024’H | |

### 9.3.2.3 ECHO Frame PDU Constraint Declaration

| ASN.1 PDU Constraint Declaration | |
|---|---|
| **Constraint Name** | : ECF_Request |
| **PDU Type** | : ECF_Frame |
| **Derivation Path** | : |
| **Comments** | : |
| **Constraint Value** | |

```
{
        SD                  JK,
        FC                  ?,
        DA                  IUT_ADDRESS,
        SA                  TESTER_ADDRESS,
        Frame_Class         ‘04’H,
        Frame_Type          ‘02’H,
        Version_ID          ‘0001’H,
        Transaction_ID      ‘000000031’H,
        Station_ID1         ‘0000’H,
        Station_ID2         TESTER_ADDRESS,
        PAD                 PAD_2,
        InfoField_Length    ?,
        EchoData            ?,
        FCS                 ?
        ED                  T
        FS_E                RESET,
        FS_A                RESET,
        FS_C                RESET,
        FS_2                -,
        FS_T                T       }
```



Copyright International Organization for Standardization
Provided by IHS under license with ISO
No reproduction or networking permitted without license from IHS
Not for Resale

| ASN.1 PDU Constraint Declaration | | | |
|---|---|---|---|
| **Constraint Name** | : ECF_TST_Req_01 | | |
| **PDU Type** | : ECF_Frame | | |
| **Derivation Path** | : ECF_Request | | |
| **Comments** | : maximum ECHO data, 4454 octets | | |
| **Constraint Value** | | | |
| REPLACE | InfoField_Length | BY | ?, |
| REPLACE | EchoData | BY | ECHO_MAX |

| ASN.1 PDU Constraint Declaration | | | |
|---|---|---|---|
| **Constraint Name** | : ECF_TST_Req_02 | | |
| **PDU Type** | : ECF_Frame | | |
| **Derivation Path** | : ECF_TST_Req_01 | | |
| **Comments** | : NULL ECHO data | | |
| **Constraint Value** | | | |
| REPLACE | Transaction_ID | BY | ‘00000032’H, |
| REPLACE | InfoField_Length | BY | ?, |
| REPLACE | EchoData | BY | ECHO_MIN |

| ASN.1 PDU Constraint Declaration | | | |
|---|---|---|---|
| **Constraint Name** | : ECF_TST_Req_03 | | |
| **PDU Type** | : ECF_Frame | | |
| **Derivation Path** | : ECF_TST_Req_01 | | |
| **Comments** | : maximum InfoField size defined by SMT | | |
| **Constraint Value** | | | |
| REPLACE | Transaction_ID | BY | ‘00000033’H, |
| REPLACE | InfoField_Length | BY | ?, |
| REPLACE | EchoData | BY | ECHO_SMTMAX |

| ASN.1 PDU Constraint Declaration | | | |
|---|---|---|---|
| **Constraint Name** | : ECF_TST_Req_04 | | |
| **PDU Type** | : ECF_Frame | | |
| **Derivation Path** | : ECF_TST_Req_01 | | |
| **Comments** | : exceeding maximum size defined by SMT | | |
| **Constraint Value** | | | |
| REPLACE | Transaction_ID | BY | ‘00000034’H, |
| REPLACE | InfoField_Length | BY | ?, |
| REPLACE | EchoData | BY | ECHO_INVALID |

--`,,```,,,,````-`-`,,`,,`,`,,`---



Copyright International Organization for Standardization
Provided by IHS under license with ISO
No reproduction or networking permitted without license from IHS
Not for Resale

| ASN.1 PDU Constraint Declaration | | | |
|---|---|---|---|
| **Constraint Name** | : ECF_IUT_Res_01 | | |
| **PDU Type** | : ECF_Frame | | |
| **Derivation Path** | : ECF_TST_Req_01 | | |
| **Comments** | : | | |
| **Constraint Value** | | | |
| REPLACE | DA | BY | TESTER_ADDRESS, |
| REPLACE | SA | BY | IUT_ADDRESS, |
| REPLACE | Frame_Type | BY | ‘03’H, |
| REPLACE | Station_ID1 | BY | ?, |
| REPLACE | Station_ID2 | BY | IUT_ADDRESS |

| ASN.1 PDU Constraint Declaration | | | |
|---|---|---|---|
| **Constraint Name** | : ECF_IUT_Res_02 | | |
| **PDU Type** | : ECF_Frame | | |
| **Derivation Path** | : ECF_IUT_Res_01 | | |
| **Comments** | : | | |
| **Constraint Value** | | | |
| REPLACE | Transaction_ID | BY | ‘00000032’H, |
| REPLACE | InfoField_Length | BY | ?, |
| REPLACE | EchoData | BY | ECHO_MIN |
| REPLACE | Station_ID2 | BY | IUT_ADDRESS |

| ASN.1 PDU Constraint Declaration | | | |
|---|---|---|---|
| **Constraint Name** | : ECF_IUT_Res_03 | | |
| **PDU Type** | : ECF_Frame | | |
| **Derivation Path** | : ECF_TST_Req_03 | | |
| **Comments** | : | | |
| **Constraint Value** | | | |
| REPLACE | DA | BY | TESTER_ADDRESS, |
| REPLACE | SA | BY | IUT_ADDRESS, |
| REPLACE | Frame_Type | BY | ‘03’H, |
| REPLACE | Station_ID1 | BY | ?, |
| REPLACE | Station_ID2 | BY | IUT_ADDRESS |



Copyright International Organization for Standardization
Provided by IHS under license with ISO
No reproduction or networking permitted without license from IHS
Not for Resale

### 9.3.2.4 RAF PDU Constraint Declaration

| ASN.1 PDU Constraint Declaration | | |
|---|---|---|
| **Constraint Name** | : | SBA_ALOC_Request00 |
| **PDU Type** | : | SBA_Frame |
| **Derivation Path** | : | |
| **Comments** | : | Tester is the SBA allocator |

| Constraint Value | |
|---|---|
| { SD | JK, |
| FC | ‘41’H, |
| DA | IUT_ADDRESS, |
| SA | TESTER_ADDRESS, |
| Frame_Class | ‘05’H, |
| Frame_Type | ‘02’H, |
| Version_ID | ‘0002’H, |
| Transaction_ID | ‘00000041’H, |
| Station_ID1 | ‘0000’H, |
| Station_ID2 | TESTER_ADDRESS, |
| PAD | PAD_2, |
| InfoField_Length | ‘0068’H, |
| resourcetype | ResourceType_00, |
| sbacommand | SBACommand_Request, |
| requestallocation | RequestAllocation_Q, |
| FCS | ?, |
| ED | T, |
| FS_E | RESET, |
| FS_A | RESET, |
| FS_C | RESET, |
| FS_2 | -, |
| FS_T | T } |

| ASN.1 PDU Constraint Declaration | | |
|---|---|---|
| **Constraint Name** | : | SBA_ALOC_Request01 |
| **PDU Type** | : | SBA_Frame |
| **Derivation Path** | : | SBA_ALOC_Reques00 |
| **Comments** | : | IUT is the SBA allocator |

| Constraint Value | | | |
|---|---|---|---|
| REPLACE | DA | BY | TESTER_ADDRESS, |
| REPLACE | SA | BY | IUT_ADDRESS, |
| REPLACE | Transaction_ID | BY | ?, |
| REPLACE | Station_ID1 | BY | ?, |
| REPLACE | Station_ID2 | BY | IUT_ADDRESS |
| REPLACE | requestallocation | BY | RequestAllocation_01 |


Copyright International Organization for Standardization
Provided by IHS under license with ISO
No reproduction or networking permitted without license from IHS
Not for Resale

| ASN.1 PDU Constraint Declaration | |
|---|---|
| **Constraint Name** | : SBA_REP_Request01 |
| **PDU Type** | : SBA_Frame |
| **Derivation Path** | : |
| **Comments** | : |

**Constraint Value**

```
{       SD                  JK,
        FC                  '41'H,
        DA                  IUT_ADDRESS,
        SA                  TESTER_ADDRESS,
        Frame_Class         '05'H,
        Frame_Type          '02'H,
        Version_ID          '0002'H,
        Transaction_ID      '00000042'H,
        Station_ID1         '0000'H,
        Station_ID2         TESTER_ADDRESS,
        PAD                 PAD_2,
        InfoField_Length    '00XX'H,
        resourcetype        ResouceType_00,
        sbacommand          SBACommand_Report,
        reportallocation    NULL,
        FCS                 ?,
        ED                  T,
        FS_E                RESET,
        FS_A                RESET,
        FS_C                RESET,
        FS_2                -,
        FS_T                T       }
```



Copyright International Organization for Standardization
Provided by IHS under license with ISO
No reproduction or networking permitted without license from IHS
Not for Resale

| ASN.1 PDU Constraint Declaration | |
|---|---|
| **Constraint Name** | : SBA_CHG_Request01 |
| **PDU Type** | : SBA_Frame |
| **Derivation Path** | : |
| **Comments** | : |

**Constraint Value**

```
{       SD                  JK,
        FC                  '41'H,
        DA                  IUT_ADDRESS,
        SA                  TESTER_ADDRESS,
        Frame_Class         '05'H,
        Frame_Type          '02'H,
        Version_ID          '0002'H,
        Transaction_ID      '00000043'H,
        Station_ID1         '0000'H,
        Station_ID2         TESTER_ADDRESS,
        PAD                 PAD_2,
        InfoField_Length    '0038'H,
        resourcetype        ResourceType_00,
        sbacommand          SBACommnad_03,
        changeallocation    ChangeRequest_Q,
        FCS                 ?,
        ED                  T,
        FS_E                RESET,
        FS_A                RESET,
        FS_C                RESET,
        FS_2                -,
        FS_T                T       }
```

| ASN.1 PDU Constraint Declaration | |
|---|---|
| **Constraint Name** | : SBA_ALOC_Response00 |
| **PDU Type** | : SBA_Frame |
| **Derivation Path** | : SBA_ALOC_Request00 |
| **Comments** | : |

**Constraint Value**

```
REPLACE     DA              BY      TESTER_ADDRESS,
REPLACE     SA              BY      IUT_ADDRESS,
REPLACE     Frame_Type      BY      '03'H,
REPLACE     Station_ID1     BY      ?,
REPLACE     Station_ID2     BY      IUT_ADDRESS,
REPLACE     InfoField_Length BY     '0058'H,
REPLACE     requestresponse BY      RequestResponse_Q
```


Copyright International Organization for Standardization
Provided by IHS under license with ISO
No reproduction or networking permitted without license from IHS
Not for Resale

| ASN.1 PDU Constraint Declaration | | | |
|---|---|---|---|
| **Constraint Name** | **:** SBA_REP_Response | | |
| **PDU Type** | **:** SBA_Frame | | |
| **Derivation Path** | **:** SBA_REQ_Response | | |
| **Comments** | **:** | | |
| **Constraint Value** | | | |
| REPLACE | DA | BY | TESTER_ADDRESS, |
| REPLACE | SA | BY | IUT_ADDRESS, |
| REPLACE | Frame_Type | BY | '03'H, |
| REPLACE | Station_ID1 | BY | ?, |
| REPLACE | Station_ID2 | BY | IUT_ADDRESS, |
| REPLACE | InfoField_Length | BY | '0034'H..'00B0'H, |
| REPLACE | reportresponse | BY | ReportResponse_Q |

| ASN.1 PDU Constraint Declaration | | | |
|---|---|---|---|
| **Constraint Name** | **:** SBA_CHG_Response | | |
| **PDU Type** | **:** SBA_Frame | | |
| **Derivation Path** | **:** | | |
| **Comments** | **:** | | |
| **Constraint Value** | | | |
| REPLACE | DA | BY | TESTER_ADDRESS, |
| REPLACE | SA | BY | IUT_ADDRESS, |
| REPLACE | Station_ID1 | BY | ?, |
| REPLACE | Station_ID2 | BY | IUT_ADDRESS, |
| REPLACE | InfoField_Length | BY | '003C'H, |
| REPLACE | changeresponse | BY | ChangeResponse_Q |



Copyright International Organization for Standardization
Provided by IHS under license with ISO
No reproduction or networking permitted without license from IHS
Not for Resale

### 9.3.2.5 ESF PDU Constraint Declaration

| ASN.1 PDU Constraint Declaration | | |
|---|---|---|
| **Constraint Name** | **:** | ESF_Request00 |
| **PDU Type** | **:** | ESF_Frame |
| **Derivation Path** | **:** | |
| **Comments** | **:** | |

| Constraint Value | | |
|---|---|---|
| { | SD | JK, |
| | FC | ‘41’H, |
| | DA | IUT_ADDRESS, |
| | SA | TESTER_ADDRESS, |
| | Frame_Class | ‘05’H, |
| | Frame_Type | ‘02’H, |
| | Version_ID | ‘0002’H, |
| | Transaction_ID | ‘00000051’H, |
| | Station_ID1 | ‘0000’H, |
| | Station_ID2 | TESTER_ADDRESS, |
| | PAD | PAD_2, |
| | InfoField_Length | ?, |
| | Info | ESF_DATA, |
| | FCS | ?, |
| | ED | T, |
| | FS_E | RESET, |
| | FS_A | RESET, |
| | FS_C | RESET, |
| | FS_2 | -, |
| | FS_T | T } |


Copyright International Organization for Standardization
Provided by IHS under license with ISO
No reproduction or networking permitted without license from IHS
Not for Resale

### 9.3.2.6 RDF PDU Constraint Declaration

| ASN.1 PDU Constraint Declaration | | |
|---|---|---|
| **Constraint Name** | : | RDF_IUT_01 |
| **PDU Type** | : | RDF_Frame |
| **Derivation Path** | : | |
| **Comments** | : | frame class not supported |

**Constraint Value**

```
{       SD                  JK,
        FC                  '41'H,
        DA                  TESTER_ADDRESS,
        SA                  IUT_ADDRESS,
        Frame_Class         '06'H,
        Frame_Type          '03'H,
        Version_ID          '0002'H,
        Transaction_ID      ?,
        Station_ID1         ?,                  -- implementer octets, PIXIT item
        Station_ID2         IUT_ADDRESS,
        PAD                 PAD_2,
        InfoField_Length    ?,
        Info                RDF_DATA01,
        ED                  T,
        FS_E                RESET,
        FS_A                RESET,
        FS_C                RESET,
        FS_2                -,
        FS_T                T       }
```

| ASN.1 PDU Constraint Declaration | | |
|---|---|---|
| **Constraint Name** | : | RDF_IUT_02 |
| **PDU Type** | : | RDF_Frame |
| **Derivation Path** | : | |
| **Comments** | : | frame version not supported |

**Constraint Value**

| | | | |
|---|---|---|---|
| REPLACE | Info | BY | RDF_IUT_DATA02 |

| ASN.1 PDU Constraint Declaration | | |
|---|---|---|
| **Constraint Name** | : | RDF_IUT_03 |
| **PDU Type** | : | RDF_Frame |
| **Derivation Path** | : | |
| **Comments** | : | success |

**Constraint Value**

| | | | |
|---|---|---|---|
| REPLACE | Info | BY | RDF_IUT_DATA03 |



Copyright International Organization for Standardization
Provided by IHS under license with ISO
No reproduction or networking permitted without license from IHS
Not for Resale

| ASN.1 PDU Constraint Declaration | | | |
|---|---|---|---|
| **Constraint Name** | : RDF_IUT_04 | | |
| **PDU Type** | : RDF_Frame | | |
| **Derivation Path** | : | | |
| **Comments** | : bad set count | | |
| **Constraint Value** | | | |
| REPLACE | Info | BY | RDF_IUT_DATA04 |

| ASN.1 PDU Constraint Declaration | | | |
|---|---|---|---|
| **Constraint Name** | : RDF_IUT_05 | | |
| **PDU Type** | : RDF_Frame | | |
| **Derivation Path** | : | | |
| **Comments** | : illegal operation | | |
| **Constraint Value** | | | |
| REPLACE | Info | BY | RDF_IUT_DATA05 |

| ASN.1 PDU Constraint Declaration | | | |
|---|---|---|---|
| **Constraint Name** | : RDF_IUT_06 | | |
| **PDU Type** | : RDF_Frame | | |
| **Derivation Path** | : | | |
| **Comments** | : no parameter | | |
| **Constraint Value** | | | |
| REPLACE | Info | BY | RDF_IUT_DATA06 |

| ASN.1 PDU Constraint Declaration | | | |
|---|---|---|---|
| **Constraint Name** | : RDF_IUT_08 | | |
| **PDU Type** | : RDF_Frame | | |
| **Derivation Path** | : | | |
| **Comments** | : out of range | | |
| **Constraint Value** | | | |
| REPLACE | Info | BY | RDF_IUT_DATA08 |


--`,,```,,,,````-`-`,,`,,`,`,,`---
Copyright International Organization for Standardization
Provided by IHS under license with ISO
No reproduction or networking permitted without license from IHS
Not for Resale

| ASN.1 PDU Constraint Declaration | | | |
|---|---|---|---|
| **Constraint Name** | : RDF_IUT_09 | | |
| **PDU Type** | : RDF_Frame | | |
| **Derivation Path** | : | | |
| **Comments** | : not authorized | | |
| **Constraint Value** | | | |
| REPLACE | Info | BY | RDF_IUT_DATA09 |

| ASN.1 PDU Constraint Declaration | | | |
|---|---|---|---|
| **Constraint Name** | : RDF_IUT_0A | | |
| **PDU Type** | : RDF_Frame | | |
| **Derivation Path** | : | | |
| **Comments** | : length error | | |
| **Constraint Value** | | | |
| REPLACE | Info | BY | RDF_IUT_DATA0A |

| ASN.1 PDU Constraint Declaration | | | |
|---|---|---|---|
| **Constraint Name** | : RDF_IUT_0B | | |
| **PDU Type** | : RDF_Frame | | |
| **Derivation Path** | : | | |
| **Comments** | : frame too long | | |
| **Constraint Value** | | | |
| REPLACE | Info | BY | RDF_IUT_DATA0B |

| ASN.1 PDU Constraint Declaration | | | |
|---|---|---|---|
| **Constraint Name** | : RDF_IUT_0D | | |
| **PDU Type** | : RDF_Frame | | |
| **Derivation Path** | : | | |
| **Comments** | : sba denied | | |
| **Constraint Value** | | | |
| REPLACE | Info | BY | RDF_IUT_DATA0D |



Copyright International Organization for Standardization
Provided by IHS under license with ISO
No reproduction or networking permitted without license from IHS
Not for Resale

### 9.3.2.7 SRF PDU Constraint Declaration

| ASN.1 PDU Constraint Declaration | | |
|---|---|---|
| **Constraint Name** | : | SRF_TST_Ann |
| **PDU Type** | : | SRF_Frame |
| **Derivation Path** | : | |
| **Comments** | : | NEED WORK!! |

| Constraint Value | | |
|---|---|---|
| { | SD | JK, |
| | FC | '41'H, |
| | DA | SMT_SRF_DA, |
| | SA | TESTER_ADDRESS, |
| | Frame_Class | '07'H, |
| | Frame_Type | '01'H, |
| | Version_ID | '0002'H, |
| | Transaction_ID | '00000070'H, |
| | Station_ID1 | '0000'H, |
| | Station_ID2 | TESTER_ADDRESS, |
| | PAD | PAD_2, |
| | InfoField_Length | ?, |
| | Info | SRF_DATA, |
| | FCS | ?, |
| | ED | T, |
| | FS_E | RESET, |
| | FS_A | RESET, |
| | FS_C | RESET, |
| | FS_2 | -, |
| | FS_T | T } |

| ASN.1 PDU Constraint Declaration | | |
|---|---|---|
| **Constraint Name** | : | SRF_TST_Ann01 |
| **PDU Type** | : | SRF_Frame |
| **Derivation Path** | : | SRF_TST_Ann |
| **Comments** | : | |

| Constraint Value | | | |
|---|---|---|---|
| REPLACE | Transaction_ID | BY | '00000071'H, |
| REPLACE | InfoField_Length | BY | ?, |
| REPLACE | Info | BY | SRF_DATA |


Copyright International Organization for Standardization
Provided by IHS under license with ISO
No reproduction or networking permitted without license from IHS
Not for Resale

| ASN.1 PDU Constraint Declaration | | | |
|---|---|---|---|
| **Constraint Name** | : SRF_TST_Ann02 | | |
| **PDU Type** | : SRF_Frame | | |
| **Derivation Path** | : SRF_TST_Ann | | |
| **Comments** | : | | |
| **Constraint Value** | | | |
| REPLACE | Transaction_ID | BY | ‘00000072’H, |
| REPLACE | InfoField_Length | BY | ?, |
| REPLACE | Info | BY | SRF_DATA |

| ASN.1 PDU Constraint Declaration | | | |
|---|---|---|---|
| **Constraint Name** | : SRF_TST_Ann03 | | |
| **PDU Type** | : SRF_Frame | | |
| **Derivation Path** | : SRF_TST_Ann | | |
| **Comments** | : | | |
| **Constraint Value** | | | |
| REPLACE | Transaction_ID | BY | ‘00000073’H, |
| REPLACE | InfoField_Length | BY | ?, |
| REPLACE | Info | BY | SRF_DATA |

| ASN.1 PDU Constraint Declaration | | | |
|---|---|---|---|
| **Constraint Name** | : SRF_TST_Ann | | |
| **PDU Type** | : SRF_Frame | | |
| **Derivation Path** | : | | |
| **Comments** | : | | |
| **Constraint Value** | | | |
| REPLACE | Transaction_ID | BY | ‘00000074’H, |
| REPLACE | InfoField_Length | BY | ?, |
| REPLACE | Info | BY | SRF_DATA |



Copyright International Organization for Standardization
Provided by IHS under license with ISO
No reproduction or networking permitted without license from IHS
Not for Resale

| ASN.1 PDU Constraint Declaration | | | |
|---|---|---|---|
| **Constraint Name** | : SRF_IUT_Ann | | |
| **PDU Type** | : SRF_Frame | | |
| **Derivation Path** | : SRF_TST_Ann | | |
| **Comments** | : | | |
| **Constraint Value** | | | |
| REPLACE | SA | BY | IUT_ADDRESS, |
| REPLACE | Transaction_ID | BY | ?, |
| REPLACE | Station_ID1 | BY | ?, |
| REPLACE | Station_ID2 | BY | IUT_ADDRESS, |
| REPLACE | InfoField_Length | BY | ?, |
| REPLACE | Info | BY | SRF_DATA |

### 9.3.2.8 PMF PDU Constraint Declaration

| ASN.1 PDU Constraint Declaration | | |
|---|---|---|
| **Constraint Name** | : PMFGet_Request_TESTER | |
| **PDU Type** | : PMFGetRequest_Frame | |
| **Derivation Path** | : | |
| **Comments** | : | |
| **Constraint Value** | | |
| { | SD | JK, |
| | FC | ‘4F’H, |
| | DA | IUT_ADDRESS, |
| | SA | TESTER_ADDRESS, |
| | Frame_Class | ‘08’H, |
| | Frame_Type | ‘02’H, |
| | Version_ID | ‘0002’H, |
| | Transaction_ID | ?, |
| | Station_ID1 | ‘0000’H, |
| | Station_ID2 | TESTER_ADDRESS, |
| | PAD | PAD_2, |
| | InfoField_Length | ?, |
| | getrequest | ?, |
| | FCS | ? |
| | ED | T |
| | FS_E | RESET, |
| | FS_A | RESET, |
| | FS_C | RESET, |
| | FS_2 | -, |
| | FS_T | T } |

--`,,```,,,,````-`-`,,`,,`,`,,`---



Copyright International Organization for Standardization
Provided by IHS under license with ISO
No reproduction or networking permitted without license from IHS
Not for Resale

| ASN.1 PDU Constraint Declaration | | | |
|---|---|---|---|
| **Constraint Name** | : PMFGet_Request_01 | | |
| **PDU Type** | : PMFGetRequest_Frame | | |
| **Derivation Path** | : PMFGet_Request_TESTER | | |
| **Comments** | : get fddiSMTStatiionId parameter value | | |
| **Constraint Value** | | | |
| REPLACE | Transaction_ID | BY | '00000080'H, |
| REPLACE | InfoField_Length | BY | '0004'H, |
| REPLACE | getrequest | BY | SMTStationId_PmfReq |

| ASN.1 PDU Constraint Declaration | | | |
|---|---|---|---|
| **Constraint Name** | : PMFGet_Request_02 | | |
| **PDU Type** | : PMFGetRequest_Frame | | |
| **Derivation Path** | : PMFGet_Request_TESTER | | |
| **Comments** | : | | |
| **Constraint Value** | | | |
| REPLACE | Transaction_ID | BY | '00000081'H, |
| REPLACE | InfoField_Length | BY | '0004'H, |
| REPLACE | getrequest | BY | SMTOpVersionId_PmfReq |

| ASN.1 PDU Constraint Declaration | | | |
|---|---|---|---|
| **Constraint Name** | : PMFGet_Request_03 | | |
| **PDU Type** | : PMFGetRequest_Frame | | |
| **Derivation Path** | : PMFGet_Request_TESTER | | |
| **Comments** | : | | |
| **Constraint Value** | | | |
| REPLACE | Transaction_ID | BY | '00000082'H, |
| REPLACE | InfoField_Length | BY | '0004'H, |
| REPLACE | getrequest | BY | SMTHiVersionId_PmfReq |

| ASN.1 PDU Constraint Declaration | | | |
|---|---|---|---|
| **Constraint Name** | : PMFGet_Request_04 | | |
| **PDU Type** | : PMFGetRequest_Frame | | |
| **Derivation Path** | : PMFGet_Request_TESTER | | |
| **Comments** | : | | |
| **Constraint Value** | | | |
| REPLACE | Transaction_ID | BY | '00000083'H, |
| REPLACE | InfoField_Length | BY | '0004'H, |
| REPLACE | getrequest | BY | SMTLoVersionId_PmfReq |



Copyright International Organization for Standardization
Provided by IHS under license with ISO
No reproduction or networking permitted without license from IHS
Not for Resale

| ASN.1 PDU Constraint Declaration | | | |
|---|---|---|---|
| **Constraint Name** | : PMFGet_Request_05 | | |
| **PDU Type** | : PMFGetRequest_Frame | | |
| **Derivation Path** | : PMFGet_Request_TESTER | | |
| **Comments** | : | | |
| **Constraint Value** | | | |
| REPLACE | Transaction_ID | BY | ‘00000084’H, |
| REPLACE | InfoField_Length | BY | ‘0004’H, |
| REPLACE | getrequest | BY | MACDownstreamNbr_PmfReq |

| ASN.1 PDU Constraint Declaration | | | |
|---|---|---|---|
| **Constraint Name** | : PMFGet_Request_06 | | |
| **PDU Type** | : PMFGetRequest_Frame | | |
| **Derivation Path** | : PMFGet_Request_TESTER | | |
| **Comments** | : | | |
| **Constraint Value** | | | |
| REPLACE | Transaction_ID | BY | ‘00000085’H, |
| REPLACE | InfoField_Length | BY | ‘0004’H, |
| REPLACE | getrequest | BY | MACOldDownstreamNbr_PmfReq |

| ASN.1 PDU Constraint Declaration | | | |
|---|---|---|---|
| **Constraint Name** | : PMFGet_Request_08.5 | | |
| **PDU Type** | : PMFGetRequest_Frame | | |
| **Derivation Path** | : PMFGet_Request_TESTER | | |
| **Comments** | : A valid Multiple Group attribute (fddiSMTStationId and fddiSMTOpVersionId) | | |
| **Constraint Value** | | | |
| REPLACE | Transaction_ID | BY | ‘00000087’H, |
| REPLACE | InfoField_Length | BY | ‘0008’H, |
| REPLACE | getrequest | BY | ValidMultiple_PmfGet |


Copyright International Organization for Standardization
Provided by IHS under license with ISO
No reproduction or networking permitted without license from IHS
Not for Resale

| ASN.1 PDU Constraint Declaration | | | |
|---|---|---|---|
| **Constraint Name** | : PMFGet_Request_09.5 | | |
| **PDU Type** | : PMFGetRequest_Frame | | |
| **Derivation Path** | : PMFGet_Request_TESTER | | |
| **Comments** | : Invalid PMF Get Request frame with multiple attributes (mixed resource index of zero and non-zero). | | |
| **Constraint Value** | | | |
| REPLACE | Transaction_ID | BY | ‘00000088’H, |
| REPLACE | InfoField_Length | BY | ‘000C’H, |
| REPLACE | getrequest | BY | InvalidMultiple_PmfGet |

| ASN.1 PDU Constraint Declaration | | | |
|---|---|---|---|
| **Constraint Name** | : PMFGet_Request_0A.5 | | |
| **PDU Type** | : PMFGetRequest_Frame | | |
| **Derivation Path** | : PMFGet_Request_TESTER | | |
| **Comments** | : Invalid group attribute of PMF Get Request (mixed resource index of zero and non-zero) | | |
| **Constraint Value** | | | |
| REPLACE | Transaction_ID | BY | ‘00000089’H, |
| REPLACE | InfoField_Length | BY | ‘000C’H, |
| REPLACE | getrequest | BY | InvalidMultipleGrp_PmfGet |

| ASN.1 PDU Constraint Declaration | | | |
|---|---|---|---|
| **Constraint Name** | : PMFGet_Request_IUT | | |
| **PDU Type** | : PMFGetRequest_Frame | | |
| **Derivation Path** | : PMFGet_Request_TESTER | | |
| **Comments** | : | | |
| **Constraint Value** | | | |
| REPLACE | DA | BY | TESTER_ADDRESS, |
| REPLACE | SA | BY | IUT_ADDRESS, |
| REPLACE | Station_ID1 | BY | ?, |
| REPLACE | Station_ID2 | BY | IUT_ADDRESS |

| ASN.1 PDU Constraint Declaration | | | |
|---|---|---|---|
| **Constraint Name** | : PMFGet_Request_07 | | |
| **PDU Type** | : PMFGetRequest_Frame | | |
| **Derivation Path** | : PMFGet_Request_IUT | | |
| **Comments** | : A valid single attribute (fddiSMTStationId) | | |
| **Constraint Value** | | | |
| REPLACE | InfoField_Length | BY | ‘0004’H, |
| REPLACE | getrequest | BY | SMTStationId_PmfReq |



Copyright International Organization for Standardization
Provided by IHS under license with ISO
No reproduction or networking permitted without license from IHS
Not for Resale

| ASN.1 PDU Constraint Declaration | | | |
|---|---|---|---|
| **Constraint Name** | **:** PMFGet_Request_08 | | |
| **PDU Type** | **:** PMFGetRequest_Frame | | |
| **Derivation Path** | **:** PMFGet_Request_IUT | | |
| **Comments** | **:** A valid Multiple attribute | | |
| **Constraint Value** | | | |
| REPLACE | InfoField_Length | BY | ‘0008’H, |
| REPLACE | getrequest | BY | ValidMultiple_PmfGet |

| ASN.1 PDU Constraint Declaration | | | |
|---|---|---|---|
| **Constraint Name** | **:** PMFGet_Request_09 | | |
| **PDU Type** | **:** PMFGetRequest_Frame | | |
| **Derivation Path** | **:** PMFGet_Request_IUT | | |
| **Comments** | **:** A valid Multiple Group attribute | | |
| **Constraint Value** | | | |
| REPLACE | InfoField_Length | BY | ‘0008’H, |
| REPLACE | getrequest | BY | ValidMultipleGrp_PmfGet |

| ASN.1 PDU Constraint Declaration | | | |
|---|---|---|---|
| **Constraint Name** | **:** PMFGet_Request_11 | | |
| **PDU Type** | **:** PMFGetRequest_Frame | | |
| **Derivation Path** | **:** PMFGet_Request_01 | | |
| **Comments** | **:** To see if the IUT implements the FC = ‘4F’H | | |
| **Constraint Value** | | | |
| REPLACE | FC | BY | ‘4F’H, |
| REPLACE | Transaction_ID | BY | ‘00000080’H |


Copyright International Organization for Standardization
Provided by IHS under license with ISO
No reproduction or networking permitted without license from IHS
Not for Resale

| ASN.1 PDU Constraint Declaration | |
|---|---|
| **Constraint Name** | : PMFGet_Response |
| **PDU Type** | : PMFGetResponse_Frame |
| **Derivation Path** | : |
| **Comments** | : Generic format |

**Constraint Value**

```
{       SD                  JK,
        FC                  '4F'H,
        DA                  TESTER_ADDRESS,
        SA                  IUT_ADDRESS,
        Frame_Class         '08'H,
        Frame_Type          '03'H,
        Version_ID          '0002'H,
        Transaction_ID      ?,
        Station_ID1         ?,
        Station_ID2         IUT_ADDRESS,
        PAD                 PAD_2,
        InfoField_Length    ?,
        getresponse         ?,
        FCS                 ?
        ED                  T
        FS_E                RESET,
        FS_A                RESET,
        FS_C                RESET,
        FS_2                -,
        FS_T                T       }
```

| ASN.1 PDU Constraint Declaration | |
|---|---|
| **Constraint Name** | : PMFGet_Response_01 |
| **PDU Type** | : PMFGetResponse_Frame |
| **Derivation Path** | : PMFGet_Response |
| **Comments** | : fddiSMTStationId |

**Constraint Value**

```
REPLACE     Transaction_ID      BY      '00000080'H,
REPLACE     getresponse         BY      PMF_IUT_Get_Res_01
```

| ASN.1 PDU Constraint Declaration | |
|---|---|
| **Constraint Name** | : PMFGet_Response_02 |
| **PDU Type** | : PMFGetResponse_Frame |
| **Derivation Path** | : PMFGet_Response |
| **Comments** | : |

**Constraint Value**

```
REPLACE     Transaction_ID      BY      '00000080'H,
REPLACE     getresponse         BY      PMF_IUT_Get_Res_02
```



Copyright International Organization for Standardization
Provided by IHS under license with ISO
No reproduction or networking permitted without license from IHS
Not for Resale

| ASN.1 PDU Constraint Declaration | | | |
|---|---|---|---|
| **Constraint Name** | **:** PMFGet_Response_03 | | |
| **PDU Type** | **:** PMFGetResponse_Frame | | |
| **Derivation Path** | **:** PMFGet_Response | | |
| **Comments** | **:** | | |
| **Constraint Value** | | | |
| REPLACE | Transaction_ID | BY | ‘00000081’H, |
| REPLACE | getresponse | BY | PMF_IUT_Get_Res_03 |

| ASN.1 PDU Constraint Declaration | | | |
|---|---|---|---|
| **Constraint Name** | **:** PMFGet_Response_04 | | |
| **PDU Type** | **:** PMFGetResponse_Frame | | |
| **Derivation Path** | **:** PMFGet_Response | | |
| **Comments** | **:** | | |
| **Constraint Value** | | | |
| REPLACE | Transaction_ID | BY | ‘00000082’H, |
| REPLACE | getresponse | BY | PMF_IUT_Get_Res_04 |

| ASN.1 PDU Constraint Declaration | | | |
|---|---|---|---|
| **Constraint Name** | **:** PMFGet_Response_05 | | |
| **PDU Type** | **:** PMFGetResponse_Frame | | |
| **Derivation Path** | **:** PMFGet_Response_01 | | |
| **Comments** | **:** | | |
| **Constraint Value** | | | |
| REPLACE | Transaction_ID | BY | ‘00000083’H, |
| REPLACE | getresponse | BY | PMF_IUT_Get_Res_05 |

| ASN.1 PDU Constraint Declaration | | | |
|---|---|---|---|
| **Constraint Name** | **:** PMFGet_Response_06 | | |
| **PDU Type** | **:** PMFGetResponse_Frame | | |
| **Derivation Path** | **:** PMFGet_Response | | |
| **Comments** | **:** | | |
| **Constraint Value** | | | |
| REPLACE | Transaction_ID | BY | ‘00000084’H, |
| REPLACE | getresponse | BY | PMF_IUT_Get_Res_06 |


Copyright International Organization for Standardization
Provided by IHS under license with ISO
No reproduction or networking permitted without license from IHS
Not for Resale

| ASN.1 PDU Constraint Declaration | | | |
|---|---|---|---|
| **Constraint Name** | : PMFGet_Response_07 | | |
| **PDU Type** | : PMFGetResponse_Frame | | |
| **Derivation Path** | : PMFGet_Response | | |
| **Comments** | : | | |
| **Constraint Value** | | | |
| REPLACE | InfoField_Length | BY | ‘1C’..‘38’H, |
| REPLACE | InfoField_Length | BY | ‘0018’..‘0034’H, |
| REPLACE | getresponse | BY | PMF_IUT_Get_Res_07 |

| ASN.1 PDU Constraint Declaration | | | |
|---|---|---|---|
| **Constraint Name** | : PMFGet_Response_08.5 | | |
| **PDU Type** | : PMFGetResponse_Frame | | |
| **Derivation Path** | : PMFGet_Response | | |
| **Comments** | : multiple group attributes (fddiSMTStationId and fddiSMTOpVersionId) | | |
| **Constraint Value** | | | |
| REPLACE | Transaction_ID | BY | ‘00000087’H, |
| REPLACE | getresponse | BY | PMF_IUT_Get_Res_08.5 |

| ASN.1 PDU Constraint Declaration | | | |
|---|---|---|---|
| **Constraint Name** | : PMFGet_Response_09.5 | | |
| **PDU Type** | : PMFGetResponse_Frame | | |
| **Derivation Path** | : PMFGet_Response | | |
| **Comments** | : Error Response of PMFGet Request frame (resource index of zero and non-zero: SMTStationId and fddiMACFrameStatusFunctions) | | |
| **Constraint Value** | | | |
| REPLACE | Transaction_ID | BY | ‘00000088’H, |
| REPLACE | getresponse | BY | PMF_IUT_Get_Res_09.5 |

| ASN.1 PDU Constraint Declaration | | | |
|---|---|---|---|
| **Constraint Name** | : PMFGet_Response_0A.5 | | |
| **PDU Type** | : PMFGetResponse_Frame | | |
| **Derivation Path** | : PMFGet_Response | | |
| **Comments** | : invalid multiple group attributes of resource index of zero and non-zero within a single frame (fddiSMTStationId_Group and fddiMACCapabilities_Group). | | |
| **Constraint Value** | | | |
| REPLACE | Transaction_ID | BY | ‘00000089’H, |
| REPLACE | getresponse | BY | PMF_IUT_Get_Res_0A.5 |

--`,,```,,,,````-`-`,,`,,`,`,,`---



Copyright International Organization for Standardization
Provided by IHS under license with ISO
No reproduction or networking permitted without license from IHS
Not for Resale

| ASN.1 PDU Constraint Declaration | |
|---|---|
| **Constraint Name** | : PMFSet_Request |
| **PDU Type** | : PMFSetRequest_Frame |
| **Derivation Path** | : |
| **Comments** | : |

**Constraint Value**

```
{       SD                  JK,
        FC                  '4F'H,
        DA                  IUT_ADDRESS,
        SA                  TESTER_ADDRESS,
        Frame_Class         '09'H,
        Frame_Type          '02'H,
        Version_ID          '0002'H,
        Transaction_ID      ?,
        Station_ID1         '0000'H,
        Station_ID2         TESTER_ADDRESS,
        PAD                 PAD_2,
        InfoField_Length    ?,
        setrequest          ?,
        FCS                 ?
        ED                  T
        FS_E                RESET,
        FS_A                RESET,
        FS_C                RESET,
        FS_2                -,
        FS_T                T       }
```

| ASN.1 PDU Constraint Declaration | |
|---|---|
| **Constraint Name** | : PMFSet_Response |
| **PDU Type** | : PMFSetResponse_Frame |
| **Derivation Path** | : |
| **Comments** | : |

**Constraint Value**

```
{       SD                  JK,
        FC                  '4F'H,
        DA                  TESTER_ADDRESS,
        SA                  TESTER_ADDRESS,
        Frame_Class         '09'H,
        Frame_Type          '03'H,
        Version_ID          '0002'H,
        Transaction_ID      ?,
        Station_ID1         ?,
        Station_ID2         IUT_ADDRESS,
        PAD                 PAD_2,
        InfoField_Length    ?,
        setresponse         ?,
        FCS                 ?
        ED                  T
        FS_E                RESET,
        FS_A                RESET,
        FS_C                RESET,
        FS_2                -,
        FS_T                T       }
```


Copyright International Organization for Standardization
Provided by IHS under license with ISO
No reproduction or networking permitted without license from IHS
Not for Resale

### 9.3.2.9 ERROR PDU Constraint Declaration

| ASN.1 PDU Constraint Declaration | |
|---|---|
| **Constraint Name** | : ERROR_BASE |
| **PDU Type** | : ERROR_Frame |
| **Derivation Path** | : |
| **Comments** | : |

| Constraint Value | | |
|---|---|---|
| { | SD | JK, |
| | FC | ‘4F’H, |
| | DA | IUT_ADDRESS, |
| | SA | TESTER_ADDRESS, |
| | Frame_Class | ?, |
| | Frame_Type | ?, |
| | Version_ID | ?, |
| | Transaction_ID | ?, |
| | Station_ID1 | ‘0000’H, |
| | Station_ID2 | TESTER_ADDRESS, |
| | PAD | PAD_2, |
| | InfoField_Length | ?, |
| | Info | ?, |
| | FCS | ? |
| | ED | T |
| | FS_E | RESET, |
| | FS_A | RESET, |
| | FS_C | RESET, |
| | FS_2 | -, |
| | FS_T | T } |

| ASN.1 PDU Constraint Declaration | |
|---|---|
| **Constraint Name** | : invalid_Request_01 |
| **PDU Type** | : ERROR_Frame |
| **Derivation Path** | : ERROR_BASE |
| **Comments** | : Invalid_FrameClass |

| Constraint Value | | | |
|---|---|---|---|
| REPLACE | Frame_Class | BY | ‘00’H, |
| REPLACE | Frame_Type | BY | ‘02’H, |
| REPLACE | Version_ID | BY | ‘0002’H, |
| REPLACE | Transaction_ID | BY | ‘00000091’H, |
| REPLACE | InfoField_Length | BY | ‘0000’H, |
| OMIT | Info | | |



Copyright International Organization for Standardization
Provided by IHS under license with ISO
No reproduction or networking permitted without license from IHS
Not for Resale

| ASN.1 PDU Constraint Declaration | | | |
|---|---|---|---|
| **Constraint Name** | **:** Invalid_Request_02 | | |
| **PDU Type** | **:** ERROR_Frame | | |
| **Derivation Path** | **:** ERROR_BASE | | |
| **Comments** | **:** Invalid_FrameType | | |
| **Constraint Value** | | | |
| REPLACE | Frame_Class | BY | ‘08’H, |
| REPLACE | Frame_Type | BY | ‘00’H, |
| REPLACE | Version_ID | BY | ‘0002’H |
| REPLACE | Transaction_ID | BY | ‘00000092’H, |
| REPLACE | InfoField_Length | BY | ‘0000’H, |
| OMIT | Info | | |

| ASN.1 PDU Constraint Declaration | | | |
|---|---|---|---|
| **Constraint Name** | **:** Invalid_Request_03 | | |
| **PDU Type** | **:** ERROR_Frame | | |
| **Derivation Path** | **:** ERROR_BASE | | |
| **Comments** | **:** Invalid_Version | | |
| **Constraint Value** | | | |
| REPLACE | Frame_Class | BY | ‘08’H, |
| REPLACE | Frame_Type | BY | ‘02’H, |
| REPLACE | Version_ID | BY | ‘0000’H |
| REPLACE | Transaction_ID | BY | ‘00000093’H, |
| REPLACE | InfoField_Length | BY | ‘0000’H, |
| OMIT | Info | | |

| ASN.1 PDU Constraint Declaration | | | |
|---|---|---|---|
| **Constraint Name** | **:** Invalid_Request_04 | | |
| **PDU Type** | **:** ERROR_Frame | | |
| **Derivation Path** | **:** ERROR_BASE | | |
| **Comments** | **:** Short_InfoField | | |
| **Constraint Value** | | | |
| REPLACE | Frame_Class | BY | ‘08’H, |
| REPLACE | Frame_Type | BY | ‘02’H, |
| REPLACE | Version_ID | BY | ‘0000’H |
| REPLACE | Transaction_ID | BY | ‘00000094’H, |
| REPLACE | InfoField_Length | BY | ‘0004’H, |
| REPLACE | Info | BY | ValidMultiple_Pmf_00 |


Copyright International Organization for Standardization
Provided by IHS under license with ISO
No reproduction or networking permitted without license from IHS
Not for Resale

| ASN.1 PDU Constraint Declaration | | | |
|---|---|---|---|
| **Constraint Name** | **:** Invalid_Request_05 | | |
| **PDU Type** | **:** ERROR_Frame | | |
| **Derivation Path** | **:** ERROR_BASE | | |
| **Comments** | **:** long_InfoField | | |
| **Constraint Value** | | | |
| REPLACE | Frame_Class | BY | ‘08’H, |
| REPLACE | Frame_Type | BY | ‘02’H, |
| REPLACE | Version_ID | BY | ‘0000’H |
| REPLACE | Transaction_ID | BY | ‘00000095’H, |
| REPLACE | InfoField_Length | BY | ‘0008’H, |
| REPLACE | Info | BY | SMTStationId_01 |

| ASN.1 PDU Constraint Declaration | | | |
|---|---|---|---|
| **Constraint Name** | **:** Invalid_Request_06 | | |
| **PDU Type** | **:** ERROR_Frame | | |
| **Derivation Path** | **:** ERROR_BASE | | |
| **Comments** | **:** Invalid version ID for NIF | | |
| **Constraint Value** | | | |
| REPLACE | Frame_Class | BY | ‘01’H, |
| REPLACE | Frame_Type | BY | ‘02’H, |
| REPLACE | Version_ID | BY | ‘0002’H |
| REPLACE | Transaction_ID | BY | ‘00000096’H, |
| REPLACE | InfoField_Length | BY | ‘0028’H, |
| REPLACE | Info | BY | NIF_TST_DATA |

| ASN.1 PDU Constraint Declaration | | | |
|---|---|---|---|
| **Constraint Name** | **:** Invalid_Request_07 | | |
| **PDU Type** | **:** ERROR_Frame | | |
| **Derivation Path** | **:** ERROR_BASE | | |
| **Comments** | **:** Invalid version ID for SIF configuration | | |
| **Constraint Value** | | | |
| REPLACE | Frame_Class | BY | ‘02’H, |
| REPLACE | Frame_Type | BY | ‘02’H, |
| REPLACE | Version_ID | BY | ‘0002’H |
| REPLACE | Transaction_ID | BY | ‘00000097’H, |
| REPLACE | InfoField_Length | BY | ‘0000’H, |
| OMIT | Info | | |



Copyright International Organization for Standardization
Provided by IHS under license with ISO
No reproduction or networking permitted without license from IHS
Not for Resale

| ASN.1 PDU Constraint Declaration | | | |
|---|---|---|---|
| **Constraint Name** | : Invalid_Request_08 | | |
| **PDU Type** | : ERROR_Frame | | |
| **Derivation Path** | : ERROR_BASE | | |
| **Comments** | : Invalid version ID for SIF configuration | | |
| **Constraint Value** | | | |
| REPLACE | Frame_Class | BY | ‘03’H, |
| REPLACE | Frame_Type | BY | ‘02’H, |
| REPLACE | Version_ID | BY | ‘0002’H |
| REPLACE | Transaction_ID | BY | ‘00000098’H, |
| REPLACE | InfoField_Length | BY | ‘0000’H, |
| OMIT | Info | | |

| ASN.1 PDU Constraint Declaration | | | |
|---|---|---|---|
| **Constraint Name** | : Invalid_Request_09 | | |
| **PDU Type** | : ERROR_Frame | | |
| **Derivation Path** | : ERROR_BASE | | |
| **Comments** | : Invalid version ID for SIF operation | | |
| **Constraint Value** | | | |
| REPLACE | Frame_Class | BY | ‘03’H, |
| REPLACE | Frame_Type | BY | ‘02’H, |
| REPLACE | Version_ID | BY | ‘0002’H |
| REPLACE | Transaction_ID | BY | ‘00000099’H, |
| REPLACE | InfoField_Length | BY | ‘0000’H, |
| OMIT | Info | | |

| ASN.1 PDU Constraint Declaration | | | |
|---|---|---|---|
| **Constraint Name** | : ERR_Response | | |
| **PDU Type** | : ERROR_Frame | | |
| **Derivation Path** | : ERROR_BASE | | |
| **Comments** | : | | |
| **Constraint Value** | | | |
| REPLACE | DA | BY | TESTER_ADDRESS, |
| REPLACE | SA | BY | IUT_ADDRESS, |
| REPLACE | Frame_Type | BY | ‘03’H, |
| REPLACE | Station_ID1 | BY | ?, |
| REPLACE | Station_ID2 | BY | IUT_ADDRESS |


Copyright International Organization for Standardization
Provided by IHS under license with ISO
No reproduction or networking permitted without license from IHS
Not for Resale

| ASN.1 PDU Constraint Declaration | | | |
|---|---|---|---|
| **Constraint Name** | **:** Invalid_Response_01 | | |
| **PDU Type** | **:** ERROR_Frame | | |
| **Derivation Path** | **:** ERR_Response | | |
| **Comments** | **:** Invalid Frame Class Response | | |
| **Constraint Value** | | | |
| REPLACE | Frame_Class | BY | ‘00’H, |
| REPLACE | Version_ID | BY | ‘0002’H |
| REPLACE | Transaction_ID | BY | ‘00000091’H, |
| REPLACE | InfoField_Length | BY | ‘00’H, |
| OMIT | Info | | |

| ASN.1 PDU Constraint Declaration | | | |
|---|---|---|---|
| **Constraint Name** | **:** Invalid_Response_02 | | |
| **PDU Type** | **:** ERROR_Frame | | |
| **Derivation Path** | **:** ERR_Response | | |
| **Comments** | **:** Invalid Frame Type | | |
| **Constraint Value** | | | |
| REPLACE | Frame_Class | BY | ‘08’H, |
| REPLACE | Frame_Type | BY | ‘00’H, |
| REPLACE | Version_ID | BY | ‘0002’H |
| REPLACE | Transaction_ID | BY | ‘00000092’H, |
| REPLACE | InfoField_Length | BY | ‘00’H, |
| OMIT | Info | | |

| ASN.1 PDU Constraint Declaration | | | |
|---|---|---|---|
| **Constraint Name** | **:** Invalid_Response_03 | | |
| **PDU Type** | **:** ERROR_Frame | | |
| **Derivation Path** | **:** ERR_Response | | |
| **Comments** | **:** Invalid Version ID | | |
| **Constraint Value** | | | |
| REPLACE | Frame_Class | BY | ‘08’H, |
| REPLACE | Version_ID | BY | ‘0000’H |
| REPLACE | Transaction_ID | BY | ‘00000093’H, |
| REPLACE | InfoField_Length | BY | ‘00’H, |
| OMIT | Info | | |



Copyright International Organization for Standardization
Provided by IHS under license with ISO
No reproduction or networking permitted without license from IHS
Not for Resale

| ASN.1 PDU Constraint Declaration | | | |
|---|---|---|---|
| **Constraint Name** | **:** Invalid_Response_04 | | |
| **PDU Type** | **:** ERROR_Frame | | |
| **Derivation Path** | **:** ERR_Response | | |
| **Comments** | **:** Shorter InfoField Length | | |
| **Constraint Value** | | | |
| REPLACE | Frame_Class | BY | ‘08’H, |
| REPLACE | Version_ID | BY | ‘0002’H |
| REPLACE | Transaction_ID | BY | ‘00000094’H, |
| REPLACE | InfoField_Length | BY | ‘04’H, |
| REPLACE | Info | BY | PMF_IUT_Get_Res_08.5 |

| ASN.1 PDU Constraint Declaration | | | |
|---|---|---|---|
| **Constraint Name** | **:** Invalid_Response_05 | | |
| **PDU Type** | **:** ERROR_Frame | | |
| **Derivation Path** | **:** ERR_Response | | |
| **Comments** | **:** Longer InfoField Length | | |
| **Constraint Value** | | | |
| REPLACE | Frame_Class | BY | ‘08’H, |
| REPLACE | Frame_Type | BY | ‘02’H, |
| REPLACE | Version_ID | BY | ‘0000’H |
| REPLACE | Transaction_ID | BY | ‘00000095’H, |
| REPLACE | InfoField_Length | BY | ‘08’H, |
| REPLACE | Info | BY | PMF_IUT_Get_Res_01 |

| ASN.1 PDU Constraint Declaration | | | |
|---|---|---|---|
| **Constraint Name** | **:** Invalid_Response_06 | | |
| **PDU Type** | **:** ERROR_Frame | | |
| **Derivation Path** | **:** ERR_Response | | |
| **Comments** | **:** | | |
| **Constraint Value** | | | |
| REPLACE | Frame_Class | BY | ‘01’H, |
| REPLACE | Frame_Type | BY | ‘02’H, |
| REPLACE | Version_ID | BY | ‘0000’H |
| REPLACE | Transaction_ID | BY | ‘00000095’H |


Copyright International Organization for Standardization
Provided by IHS under license with ISO
No reproduction or networking permitted without license from IHS
Not for Resale

| ASN.1 PDU Constraint Declaration | | | |
|---|---|---|---|
| **Constraint Name** | **:** Invalid_Response_06 | | |
| **PDU Type** | **:** ERROR_Frame | | |
| **Derivation Path** | **:** ERR_Response | | |
| **Comments** | **:** | | |
| **Constraint Value** | | | |
| REPLACE | Frame_Class | BY | ‘01’H, |
| REPLACE | Version_ID | BY | ‘0002’H |
| REPLACE | Transaction_ID | BY | ‘00000096’H |

| ASN.1 PDU Constraint Declaration | | | |
|---|---|---|---|
| **Constraint Name** | **:** Invalid_Response_07 | | |
| **PDU Type** | **:** ERROR_Frame | | |
| **Derivation Path** | **:** ERR_Response | | |
| **Comments** | **:** | | |
| **Constraint Value** | | | |
| REPLACE | Frame_Class | BY | ‘02’H, |
| REPLACE | Frame_Type | BY | ‘02’H, |
| REPLACE | Version_ID | BY | ‘0002’H |
| REPLACE | Transaction_ID | BY | ‘00000097’H |

| ASN.1 PDU Constraint Declaration | | | |
|---|---|---|---|
| **Constraint Name** | **:** Invalid_Response_08 | | |
| **PDU Type** | **:** ERROR_Frame | | |
| **Derivation Path** | **:** ERR_Response | | |
| **Comments** | **:** | | |
| **Constraint Value** | | | |
| REPLACE | Frame_Class | BY | ‘03’H, |
| REPLACE | Version_ID | BY | ‘0002’H |
| REPLACE | Transaction_ID | BY | ‘00000098’H |



Copyright International Organization for Standardization
Provided by IHS under license with ISO
No reproduction or networking permitted without license from IHS
Not for Resale

#### 9.3.2.10 Synchronous Frame PDU Constraint Declaration

| ASN.1 PDU Constraint Declaration | | |
|---|---|---|
| **Constraint Name** | : | SYNC_Frame00 |
| **PDU Type** | : | SYNC_Frame |
| **Derivation Path** | : | |
| **Comments** | : | |
| **Constraint Value** | | |
| { SD | | JK, |
| FC | | 'D0'H, |
| DA | | TESTER_ADDRESS, |
| SA | | IUT_ADDRESS, |
| InfoField | | ?, |
| FCS | | ? |
| ED | | T |
| FS_E | | RESET, |
| FS_A | | RESET, |
| FS_C | | RESET, |
| FS_2 | | -, |
| FS_T | | T } |

### 9.4 Dynamic Parts

### 9.4.1 Frame Processing Test Cases

| Test Case Dynamic Behavior | | | | | |
|---|---|---|---|---|---|
| **Test Case Name** | : | Unsupported_FrameClass | | | |
| **Group** | : | FDDI/FBM/ERROR/response/ | | | |
| **Purpose** | : | Verify that the IUT should respond with a RDF with 'Reason: frame class not supported' when a received Request frame's Frame Class is invalid. | | | |
| **Default** | : | | | | |
| **Comment** | : | SMT 8.1.3.1 | | | |
| **Nr** | **Label** | **Behavior Description** | **Constraints Ref** | **Verdict** | **Comments** |
| 1 | | +RING_OP | | | (1) |
| 2 | | !ERROR_Frame | Invalid_Request_01 | | (2) |
| 3 | | START TIMER30 | | | |
| 4 | L0 | ?ERROR_Frame | Invalid_Response_01 | FAIL | (3) |
| 5 | | ?RDF_Frame | RDF_IUT_01 | PASS | (4) |
| 6 | | ?OTHERWISE | | | |
| 7 | | GOTO L0 | | | |
| 8 | | ?TIMEOUT TIMER30 | | FAIL | (5) |

**Detailed Comments:**

(1) Operational Ring.
(2) Tester sends an ERROR Frame Class Request frame to the IUT.
(3) IUT responded to an invalid Frame Class frame, thus IUT failed the test.
(4) IUT responded with RDF with Reason:FrameClassNotSupported.
(5) The test timer is now expired and the tester has not received a RDF frame from the IUT. The IUT failed this test.


Copyright International Organization for Standardization
Provided by IHS under license with ISO
No reproduction or networking permitted without license from IHS
Not for Resale

**Test Case Dynamic Behavior**

**Test Case Name** : Unsupported_FrameType
**Group** : FDDI/FBM/ERROR/response/
**Purpose** : Verify that the IUT does not respond when the received frame type is undefined or not defined within the scope of the received frame class.
**Default** :
**Comment** : SMT 8.1.3.2

| Nr | Label | Behavior Description | Constraints Ref | Verdict | Comments |
|---|---|---|---|---|---|
| 1 | | +RING_OP | | | (1) |
| 2 | | !ERROR_Frame | Invalid_Request_02 | | (2) |
| 3 | | START TIMER30 | | | |
| 4 | L0 | ?ERROR_Frame | Invalid_Response_02 | FAIL | (3) |
| 5 | | ?OTHERWISE | | | |
| 6 | | GOTO L0 | | | |
| 7 | | ?TIMEOUT TIMER30 | | PASS | (4) |

**Detailed Comments:**

(1) Operational Ring.
(2) Tester sends an ERROR Frame with invalid Frame Type to the IUT.
(3) IUT responded to an invalid Frame Type frame, thus IUT failed the test.
(4) The test timer is now expired and the tester has not received a Response frame from the IUT. Thus it is assumed that IUT discarded the tester's Request frame.

**Test Case Dynamic Behavior**

**Test Case Name** : Invalid_Version1
**Group** : FDDI/FBM/ERROR/response/
**Purpose** : Verify that the IUT has implemented Version ID correctly.
**Default** :
**Comment** : SMT 8.1.3.3

| Nr | Label | Behavior Description | Constraints Ref | Verdict | Comments |
|---|---|---|---|---|---|
| 1 | | +RING_OP | | | (1) |
| 2 | L1 | !ERROR_Frame | Invalid_Request_03 | | (2) |
| 3 | | START TIMER30 | | | |
| 4 | | ?ERROR_Frame | Invalid-Response_03 | FAIL | (3) |
| 5 | | ?RDF_Frame | RDF_IUT_Res03 | PASS | (4) |
| 6 | | ?OTHERWISE | | | |
| 7 | | GOTO L1 | | | |
| 8 | | ?TIMEOUT TIMER30 | | FAIL | (5) |

**Detailed Comments:**

(1) Operational Ring.
(1) Tester sends ERROR Request frame with invalid version id ('0000'H).
(2) Tester received the ERROR Response frame from the IUT. The IUT failed the test.
(3) Tester received a RDF Response frame with 'Reason: frame version not supported,' the IUT passed the test.
(4) The tester timer expired and the did not received a Response frame from the IUT. The IUT failed the test.



Copyright International Organization for Standardization
Provided by IHS under license with ISO
No reproduction or networking permitted without license from IHS
Not for Resale

**Test Case Dynamic Behavior**

**Test Case Name** : InfoField_Test_01
**Group** : FDDI/FBM/ERROR/response/
**Purpose** : Purpose of this test is to see how the IUT processes an invalid InfoField length by the implementer's option.
**Default** :
**Comment** : SMT 8.1.3.4. None of the IUT will fail on this test.

| Nr | Label | Behavior Description | Constraints Ref | Verdict | Comments |
|---|---|---|---|---|---|
| 1 | | +RING_OP | | | |
| 2 | L1 | !ERROR_Frame | Invalid_Request_04 | | (1) |
| 3 | | START TIMER30 | | | |
| 4 | | ?ERROR_Frame | Invalid_Response_04 | PASS | (2) |
| 5 | | ?RDF_Frame | RDF_IUT_Res03 | PASS | (3) |
| 6 | | ?OTHERWISE | | | |
| 7 | | GOTO L1 | | | |
| 8 | | ?TIMEOUT TIMER30 | | PASS | (4) |

**Detailed Comments:**

(1) Operational Ring.
(1) Tester sends ERROR Request frame with InfoField length is shorter than the remaining INFO field.
(2) Tester received the ERROR Response frame from the IUT. The IUT failed the test.
(3) Tester received a RDF Response frame with 'Reason: length error,' the IUT passed the test.
(4) The tester timer expired and the tester did not received the Response frame from the IUT.

**Test Case Dynamic Behavior**

**Test Case Name** : InfoField_Test_02
**Group** : FDDI/FBM/ERROR/response/
**Purpose** : Purpose of this test is to see how the IUT processes an invalid InfoField length by the implementer's option.
**Default** :
**Comment** : SMT 8.1.3.4. None of the IUT will fail in this test.

| Nr | Label | Behavior Description | Constraints Ref | Verdict | Comments |
|---|---|---|---|---|---|
| 1 | | +RING_OP | | | |
| 2 | L1 | !ERROR_Frame | Invalid_Request_05 | | (1) |
| 3 | | START TIMER30 | | | |
| 4 | | ?ERROR_Frame | Invalid_Response_05 | PASS | (2) |
| 5 | | ?RDF_Frame | RDF_IUT_Res03 | PASS | (3) |
| 6 | | ?OTHERWISE | | | |
| 7 | | GOTO L1 | | | |
| 8 | | ?TIMEOUT TIMER30 | | PASS | (4) |

**Detailed Comments:**

(1) Operational Ring.
(1) Tester sends ERROR Request frame with InfoField length is longer than the remaining INFO field.
(2) Tester received the ERROR Response frame from the IUT.
(3) Tester received a RDF Response frame with 'Reason: length error.'
(4) The tester timer expired and the tester did not received Response frame from the IUT.


Copyright International Organization for Standardization
Provided by IHS under license with ISO
No reproduction or networking permitted without license from IHS
Not for Resale

**Test Case Dynamic Behavior**

**Test Case Name** : StationID_Test
**Group** : FDDI/MIB/PMF/GET/response/
**Purpose** : Verify that IUT operates with the same value from MIB attribute fddiSMTStationIdand the StationID field from the PDU.
**Default** :
**Comment** : SMT 7.1.2.4.

| Nr | Label | Behavior Description | Constraints Ref | Verdict | Comments |
|---|---|---|---|---|---|
| 1 | | +RING_OP | | | |
| 2 | | !PMFGetRequest_Frame | PMFGet_Request_01 | | (1) |
| 3 | | START TIMER30 | | | |
| 4 | | ?PMFGetResponse_Frame | PMFGet_Response_01 | PASS | (2) |
| 5 | | ?OTHERWISE | | | |
| 6 | L0 | GOTO L0 | | | |
| 7 | | ?TIMEOUT TIMER30 | | FAIL | (3) |

**Detailed Comments:**

(1) Operational Ring.
(1) Tester sends PMF Get Request frame with StaionID parameter.
(2) Tester receives a PMF Get Response frame from the IUT which matches its SMTStationId from the MIB and its Station ID field.
(3) The tester timer is now expired and no PMF Get Response frame is received.

**Test Case Dynamic Behavior**

**Test Case Name** : VersionID_Test01
**Group** : FDDI/FBM/PMF/GET/response/
**Purpose** : Verify that the IUT's value of the Version_ID field and that of the SMTOpversionID are the same except ECF, NIF, and SIF.
**Default** :
**Comment** : SMT 7.1.2.2

| Nr | Label | Behavior Description | Constraints Ref | Verdict | Comments |
|---|---|---|---|---|---|
| 1 | | +RING_OP | | | |
| 2 | | !PMFGetRequest_Frame | PMFGet_Request_02 | | (1) |
| 3 | | START TIMER30 | | | |
| 4 | | ?PMFGetResponse_Frame | PMFGet_Resonse_02 | PASS | (2) |
| 5 | | ?OTHERWISE | | | |
| 6 | L0 | GOTO L0 | | | |
| 7 | | ?TIMEOUT TIMER30 | | FAIL | (3) |

**Detailed Comments:**

(1) Operational Ring.
(1) Tester sends PMF Get Request frame with SMTOpVersionId parameter.
(2) Tester receives a PMF Get Response frame from the IUT which has the same values for both SMTOpversionId and Version_ID field.
(3) The tester timer is now expired and no PMF Get Response frame is received.



Copyright International Organization for Standardization
Provided by IHS under license with ISO
No reproduction or networking permitted without license from IHS
Not for Resale

| Test Case Dynamic Behavior | | | | | |
|---|---|---|---|---|---|
| **Test Case Name** : VersionID_Test02<br>**Group** : FDDI/FBM/PMF/GET/response/<br>**Purpose** : Verify that the value of IUT's SMTHiVersionId is '0002'H for this standard.<br>**Default** :<br>**Comment** : SMT 7.1.2.2 | | | | | |
| **Nr** | **Label** | **Behavior Description** | **Constraints Ref** | **Verdict** | **Comments** |
| 1 | | +RING_OP | | | |
| 2 | | !PMFGetRequest_Frame | PMFGet_Request_03 | | (1) |
| 3 | | START TIMER30 | | | |
| 4 | | ?PMFGetResponse_Frame | PMFGet_Response_03 | PASS | (2) |
| 5 | | ?OTHERWISE | | | |
| 6 | L0 | GOTO L0 | | | |
| 7 | | ?TIMEOUT TIMER30 | | FAIL | (3) |
| **Detailed Comments:**<br>(1) Operational Ring.<br>(1) Tester sends PMF Get Request frame with SMTHiVersionId parameter.<br>(2) Tester receives a PMF Get Response frame with SMTHiversionId = '0002'H.<br>(3) The tester timer is now expired and no PMF Get Response frame is received. | | | | | |

| Test Case Dynamic Behavior | | | | | |
|---|---|---|---|---|---|
| **Test Case Name** : VersionID_Test03<br>**Group** : FDDI/MIB/PMF/GET/response/<br>**Purpose** : Verify that the value of IUT's SMTLoVersionId is '0001'H for this standard.<br>**Default** :<br>**Comment** : SMT 7.1.2.2. This guarantees backward compatibility with SMT 6.2. | | | | | |
| **Nr** | **Label** | **Behavior Description** | **Constraints Ref** | **Verdict** | **Comments** |
| 1 | | +RING_OP | | | |
| 2 | | !PMFGetRequest_Frame | PMFGet_Request_04 | | (1) |
| 3 | | START TIMER30 | | | |
| 4 | | ?PMFGetResponse_Frame | PMFGet_Response_04 | PASS | (2) |
| 5 | | ?OTHERWISE | | | |
| 6 | L0 | GOTO L0 | | | |
| 7 | | ?TIMEOUT TIMER30 | | FAIL | (3) |
| **Detailed Comments:**<br>(1) Operational Ring.<br>(1) Tester sends PMF Get Request frame with SMTLoVersionId parameter.<br>(2) Tester receives a PMF Get Response frame with SMTOpversionId = '0001'H.<br>(3) The tester timer is now expired and the tester has not received the PMF Get Request frame from the IUT, thus the IUT failed the test. | | | | | |


Copyright International Organization for Standardization
Provided by IHS under license with ISO
No reproduction or networking permitted without license from IHS
Not for Resale

| Test Case Dynamic Behavior | | | | | |
|---|---|---|---|---|---|
| **Test Case Name** : VersionID_Test04<br>**Group** : FDDI/MIB/NIF/response/<br>**Purpose** : Verify that the Version_ID of the NIF is a constant value of '0001'H.<br>**Default** :<br>**Comment** : SMT 7.2.1.1 | | | | | |
| **Nr** | **Label** | **Behavior Description** | **Constraints Ref** | **Verdict** | **Comments** |
| 1 | | +RING_OP | | | |
| 2 | | !ERROR_Frame | Invalid_Request_06 | | (1) |
| 3 | | START TIMER30 | | | |
| 4 | | ?NIF_Frame | Invalid_Response_06 | FAIL | (2) |
| 5 | | ?RDF_Frame | RDF_IUT_02 | PASS | (3) |
| 6 | L0 | ?OTHERWISE | | | |
| 7 | | GOTO L0 | | | |
| 8 | | ?TIMEOUT TIMER30 | | FAIL | (4) |
| **Detailed Comments:**<br>(1) Operational Ring.<br>(1) Tester sends NIF Request frame with Version_ID = '0002'H.<br>(2) Tester receives a NIF Response frame.<br>(3) Tester receives a RDF with 'Reason: frame version not supported.'<br>(4) The tester timer is now expired and did not receive any response from the IUT. | | | | | |

| Test Case Dynamic Behavior | | | | | |
|---|---|---|---|---|---|
| **Test Case Name** : VersionID_Test05<br>**Group** : FDDI/MIB/SIF/CONF/response/<br>**Purpose** : Verify that the Version_ID of the SIF Configuration is a constant value of '0001'H.<br>**Default** :<br>**Comment** : SMT 7.1.2.2 | | | | | |
| **Nr** | **Label** | **Behavior Description** | **Constraints Ref** | **Verdict** | **Comments** |
| 1 | | +RING_OP | | | |
| 2 | | !ERROR_Frame | Invalid_Request_07 | | (1) |
| 3 | | START TIMER30 | | | |
| 4 | | ?SIF_Frame | Invalid_Response_07 | FAIL | (2) |
| 5 | | ?RDF_Frame | RDF_IUT_02 | PASS | (3) |
| 6 | L0 | ?OTHERWISE | | | |
| 7 | | GOTO L0 | | | |
| 8 | | ?TIMEOUT TIMER30 | | FAIL | (4) |
| **Detailed Comments:**<br>(1) Operational Ring.<br>(1) Tester sends SIF Configuration Request frame with Version_ID = '0002'H.<br>(2) Tester receives a SIF Configuration Response frame.<br>(3) Tester receives a RDF with 'Reason: frame version not supported.'<br>(4) The tester timer is now expired and did not receive any response from the IUT. | | | | | |



Copyright International Organization for Standardization
Provided by IHS under license with ISO
No reproduction or networking permitted without license from IHS
Not for Resale

| Test Case Dynamic Behavior | | | | | |
|---|---|---|---|---|---|
| **Test Case Name** : VersionID_Test06<br>**Group** : FDDI/MIB/SIF/OPER/response/<br>**Purpose** : Verify that the Version_ID of the SIF Operation is a constant value of '0001'H.<br>**Default** :<br>**Comment** : SMT 7.1.2.2 | | | | | |
| **Nr** | **Label** | **Behavior Description** | **Constraints Ref** | **Verdict** | **Comments** |
| 1 | | +RING_OP | | | |
| 2 | | !ERROR_Frame | Invalid_Request_06 | | (1) |
| 3 | | START TIMER30 | | | |
| 4 | | ?SIF_Frame | Invalid_Response_06 | FAIL | (2) |
| 5 | | ?RDF_Frame | RDF_IUT_02 | PASS | (3) |
| 6 | L0 | ?OTHERWISE | | | |
| 7 | | GOTO L0 | | FAIL | (3) |
| | | ?TIMEOUT TIMER30 | | | |
| **Detailed Comments:**<br>(1) Operational Ring.<br>(1) Tester sends SIF Operation Request frame with Version_ID = '0002'H.<br>(2) Tester receives a SIF Operation Response frame.<br>(3) Tester receives a RDF with 'Reason: frame version not supported.'<br>(4) The tester timer is now expired and did not receive any response from the IUT. | | | | | |

| Test Case Dynamic Behavior | | | | | |
|---|---|---|---|---|---|
| **Test Case Name** : VersionID_Test08<br>**Group** : FDDI/MIB/ECF/response/<br>**Purpose** : Verify that the Version ID of the ECF is a constant value of '0001'H.<br>**Default** :<br>**Comment** : SMT 7.1.2.2 | | | | | |
| **Nr** | **Label** | **Behavior Description** | **Constraints Ref** | **Verdict** | **Comments** |
| 1 | | +RING_OP | | | |
| 2 | | !ERROR_Frame | Invalid_Request_09 | | (1) |
| 3 | | START TIMER30 | | | |
| 4 | | ?ECF_Frame | Invalid_Response_09 | FAIL | (2) |
| 5 | | ?RDF_Frame | RDF_IUT_02 | PASS | (3) |
| 6 | L0 | ?OTHERWISE | | | |
| 7 | | GOTO L0 | | FAIL | (3) |
| | | ?TIMEOUT TIMER30 | | | |
| **Detailed Comments:**<br>(1) Operational Ring.<br>(1) Tester sends ECF Request frame with Version_ID = '0002'H.<br>(2) Tester receives a ECF Response frame.<br>(3) Tester receives a RDF with 'Reason: frame version not supported.'<br>(4) The tester timer is now expired and did not receive any response from the IUT. | | | | | |



Copyright International Organization for Standardization
Provided by IHS under license with ISO
No reproduction or networking permitted without license from IHS
Not for Resale

| Test Case Dynamic Behavior | | | | | |
|---|---|---|---|---|---|
| **Test Case Name** : NIF_Version_ID<br>**Group** : FDDI/MIB/NIF/response/<br>**Purpose** : Verify that the IUT does not response to the Version_ID = '0002'H.<br>**Default** :<br>**Comment** : | | | | | |
| **Nr** | **Label** | **Behavior Description** | **Constraints Ref** | **Verdict** | **Comments** |
| 1 | | +RING_OP | | | |
| 2 | | !ERROR_Frame | Invalid_Request_06 | | (1) |
| 3 | | START TIMER30 | | | |
| 4 | | ?PMFGetResponse_Frame | Invalid_Response_06 | FAIL | (2) |
| 5 | | ?RDF_Frame | RDF_IUT_02 | | (3) |
| 6 | L0 | ?OTHERWISE | | | |
| 7 | | GOTO L0 | | FAIL | (3) |
| | | ?TIMEOUT TIMER30 | | | |
| **Detailed Comments:**<br>(1) Operational Ring.<br>(1) Tester sends NIF Request frame with Version_ID = '0002'H.<br>(2) Tester receives a NIF Response frame.<br>(3) Tester receives a RDF with 'Reason: frame version not supported.'<br>(4) The tester timer is now expired and did not receive any response from the IUT. | | | | | |

### 9.4.2 Neighbor Information Frame Test Cases

| Test Case Dynamic Behavior | | | | | |
|---|---|---|---|---|---|
| **Test Case Name** : NIF_Announce1<br>**Group** : FDDI/FBM/NIF/<br>**Purpose** : Verify that the IUT has the capability of generating and transmitting an optional NIF Announcement frame correctly.<br>**Default** :<br>**Comment** : This is an optional test for the IUTs which implement NIF Announcement. | | | | | |
| **Nr** | **Label** | **Behavior Description** | **Constraints Ref** | **Verdict** | **Comments** |
| 1 | | +RING_OP | | | (1) |
| 2 | | <IUT!NIF_Frame> | NIF_IUT_Ann_01 | | (2) |
| 3 | | START OPR_TIMER | | | |
| 4 | L0 | ?NIF_Frame | NIF_IUT_Ann_01 | PASS | (3) |
| 5 | | ?OTHERWISE | | | |
| 6 | | GOTO L0 | | | |
| 7 | | ?TIMEOUT OPR_TIMER | | FAIL | (4) |
| **Detailed Comments:**<br>(1) Operational Ring<br>(2) Forcing IUT to send NIF Announcement Frame by an IUT operator.<br>(3) Tester receives NIF Announcement Frame from the IUT, thus the IUT passed the test.<br>(4) The test timer is now expired and the tester has not received a NIF Announcement frame from the IUT thus fails the test. | | | | | |



Copyright International Organization for Standardization
Provided by IHS under license with ISO
No reproduction or networking permitted without license from IHS
Not for Resale

**Test Case Dynamic Behavior**

**Test Case Name** : NIF_Request1
**Group** : FDDI/FBM/NIF/
**Purpose** : To verify that the IUT generates and transmits a NIF Request frame periodically when Timer TNN expires.
**Default** :
**Comment** :

| Nr | Label | Behavior Description | Constraints Ref | Verdict | Comments |
|---|---|---|---|---|---|
| 1 | | +INIT_RING | | | (1) |
| 2 | | START TIMER60 | | | |
| 3 | L0 | ?NIF_Frame | NIF_IUT_Req_01 | | (2) |
| 4 | | START TIMER30 | | | |
| 5 | L1 | ?NIF_Frame | NIF_IUT_Req_01 | PASS | (3) |
| 6 | | ?OTHERWISE | | | |
| 7 | | GOTO L1 | | | |
| 8 | | ?TIMEOUT TIMER30 | | FAIL | (4) |
| 9 | | ?OTHERWISE | | | |
| 10 | | GOTO L0 | | | |
| 11 | | ?TIMEOUT TIMER60 | | FAIL | (5) |

**Detailed Comments:**

(1) Power up the IUT and wait.
(2) Tester received the first NIF Request frame from the IUT. At this point the IUT should reset its TNN timer and will send an another NIF Request frame upon the expiration of TNN.
(3) Tester received a second NIF Request frame from the IUT. The IUT passed NIF Request test.
(4) Tester does not received second NIF Request frame from the IUT and test timer TNN expired. The IUT failed this test.
(5) The test timer expired and tester has not received any NIF Request frame from the IUT.

**Test Case Dynamic Behavior**

**Test Case Name** : NIF_Response1
**Group** : FDDI/FBM/NIF/
**Purpose** : To verify that the IUT generates and transmits a NIF Response frame when it receives a NIF Request Frame.
**Default** :
**Comment** :

| Nr | Label | Behavior Description | Constraints Ref | Verdict | Comments |
|---|---|---|---|---|---|
| 1 | | +RING_OP | | | (1) |
| 2 | | !NIF_Frame | NIF_TST_Req_01 | | (2) |
| 3 | | START TIMER30 | | | |
| 4 | L0 | ?NIF_Frame | NIF_IUT_Res_01 | PASS | (3) |
| 5 | | ?OTHERWISE | | | |
| 6 | | GOTO L0 | | | |
| 7 | | ?TIMEOUT TIMER30 | | FAIL | (4) |

**Detailed Comments:**

(1) Ring is operational.
(2) Tester sends a NIF Request frame to the IUT.
(3) Tester received a NIF Response frame from the IUT. The IUT passed the test.
(4) Tester does not received a NIF Response frame from the IUT and test timer TNN expired. The IUT failed this test.


Copyright International Organization for Standardization
Provided by IHS under license with ISO
No reproduction or networking permitted without license from IHS
Not for Resale

| Test Case Dynamic Behavior | | | | | |
|---|---|---|---|---|---|
| **Test Case Name** : InValid_UNA<br>**Group** : FDDI/FBM/NIF/<br>**Purpose** : Verify that the IUT invalids Upstream Neighbor Address upon the expiration of timer T_NN_OUt.<br>**Default** :<br>**Comment** : | | | | | |
| **Nr** | **Label** | **Behavior Description** | **Constraints Ref** | **Verdict** | **Comments** |
| 1 | | +RING_OP | | | |
| 2 | | !NIF_Frame | NIF_TST_Req_01 | | (1) |
| 3 | | START TIMER30 | | | (2) |
| 4 | L0 | ?NIF_Frame | NIF_IUT_Req_03 | | |
| 5 | | !NIF_Frame | NIF_TST_Res_01 | | |
| 6 | | START TIMER228 | | | (3) |
| 7 | | ?TIMEOUT TIMER228 | | | |
| 8 | | ?NIF_Frame | NIF_IUT_Req_01 | PASS | (4) |
| | | ?NIF_Frame | NIF_IUT_Req_03 | FAIL | (5) |
| | | ?OTHERWISE | | | |
| | | GOTO L0 | | | |
| | | ?TIMEOUT TIMER30 | | FAIL | |
| **Detailed Comments:**<br>(1) Tester transmits a NIF Announcement frame.<br>(2) Tester received a first NIF Request frame with UNA = TESTER_ADDRESS from the IUT.<br>(3) Tester waits until timer T_NN_OUT expires.<br>(4) Tester receives a NIF Request frame from the IUT with UNA = ‘UnknownSMTAddress.<br>(5) Tester received a NIF Request frame from the IUT with UNA = TESTER_ADDRESS. | | | | | |

| Test Case Dynamic Behavior | | | | | |
|---|---|---|---|---|---|
| **Test Case Name** : Valid_DNA<br>**Group** : FDDI/FBM/PMF/GET/response/<br>**Purpose** : Verify that the IUT has a valid fddiMACDownstreamNbr.<br>**Default** :<br>**Comment** : | | | | | |
| **Nr** | **Label** | **Behavior Description** | **Constraints Ref** | **Verdict** | **Comments** |
| 1 | | +RING_OP | | | |
| 2 | | !NIF_Frame | NIF_TST_Req_01 | | (1) |
| 3 | | START TIMER30 | | | |
| 4 | | ?NIF_Frame | NIF_IUT_Res_01 | | (2) |
| 5 | | !PMFGetRequest_Frame | PMF_Request_05 | | (3) |
| 6 | L0 | START TIMER30 | | | |
| 7 | | ?PMFGetResponse_Frame | PMF_Response_05 | PASS | (4) |
| 8 | | ?OTHERWISE | | | |
| 9 | | GOTO L0 | | | |
| | | ?TIMEOUT TIMER30 | | FAIL | |
| | | ?TIMEOUT TIMER30 | | FAIL | |
| **Detailed Comments:**<br>(1) Tester transmits a NIF Announcement frame.<br>(2) Tester received a first NIF Request frame from the IUT.<br>(3) Tester transmits a PMF Get Request frame with fddiMACDdownstreamNbr parameter to the IUT.<br>(4) Tester receives a PMF Get Response frame from the IUT. | | | | | |



Copyright International Organization for Standardization
Provided by IHS under license with ISO
No reproduction or networking permitted without license from IHS
Not for Resale

**Test Case Dynamic Behavior**

**Test Case Name** : Invalid_DNA
**Group** : FDDI/FBM/PMF/GET/response/
**Purpose** : Verify that the IUT has a invalid its fddiMACDownstreamNbr when T_NN_OUT timer expires.
**Default** :
**Comment** :

| Nr | Label | Behavior Description | Constraints Ref | Verdict | Comments |
|---|---|---|---|---|---|
| 1 | | +RING_OP | | | |
| 2 | | !NIF_Frame | NIF_TST_Req_01 | | (1) |
| 3 | | START TIMER228 | | | |
| 4 | L0 | ?NIF_Frame | NIF_IUT_Res_01 | | (2) |
| 5 | | GOTO L0 | | | |
| 6 | | ?OTHERWISE | | | |
| 7 | | GOTO L0 | | | |
| 8 | | ?TIMEOUT TIMER228 | | | (3) |
| 9 | | !PMFGetRequest_Frame | PMF_Request_05 | | (4) |
| 10 | | START TIMER30 | | | |
| 11 | L1 | ?PMFGetResponse_Frame | PMF_Response_06 | PASS | (5) |
| 12 | | ?OTHERWISE | | | |
| 13 | | GOTO L1 | | | |
| 14 | | ?TIMEOUT TIMER30 | | FAIL | |

**Detailed Comments:**

(1) Tester transmits a NIF Request frame.
(2) Tester received a NIF Response frame from the IUT.
(3) Tester strips all frames until TIMER288 expires. The IUT should invalidate its current DNA.
(4) Tester transmits a PMF Get Request frame with fddiMACDdownstreamNbr parameter to the IUT.
(5) Tester receives a PMF Get Response frame from the IUT with DNA='unknown_address'.


--`,,```,,,,````-`-`,,`,,`,`,,`---
Copyright International Organization for Standardization
Provided by IHS under license with ISO
No reproduction or networking permitted without license from IHS
Not for Resale

**Test Case Dynamic Behavior**

**Test Case Name** : Old_UNA
**Group** : FDDI/FBM/PMF/GET/response/
**Purpose** : Verify that the IUT invalidates its fddiMACUpstreamNbr when timer T_NN_OUT expires and stores fddiMACUpstreamNbr to fddiMACOldUpstreamNbr.
**Default** :
**Comment** :

| Nr | Label | Behavior Description | Constraints Ref | Verdict | Comments |
|---|---|---|---|---|---|
| 1 | | +RING_OP | | | |
| 2 | | !NIF_Frame | NIF_TST_Req_01 | | (1) |
| 3 | | START TIMER228 | | | |
| 4 | L0 | ?NIF_Frame | NIF_IUT_Res_01 | | (2) |
| 5 | | GOTO L0 | | | |
| 6 | | ?OTHERWISE | | | |
| 7 | | GOTO L0 | | | |
| 8 | | ?TIMEOUT TIMER228 | | | (3) |
| 9 | | !PMFGetRequest_Frame | PMF_Request_06 | | (4) |
| 10 | | START TIMER30 | | | |
| 11 | L1 | ?PMFGetResponse_Frame | PMF_Response_07 | PASS | (5) |
| 12 | | ?OTHERWISE | | | |
| 13 | | GOTO L1 | | | |
| 14 | | ?TIMEOUT TIMER30 | | FAIL | |

**Detailed Comments:**

(1) Tester transmits a NIF Request frame.
(2) Tester received a NIF Response frame from the IUT.
(3) Tester strips all frames until TIMER228 expires. The IUT should invalidate its current UNA.
(4) Tester transmits a PMF Get Request frame with fddiMACOldUpstreamNbr parameter to the IUT.
(5) Tester receives a PMF Get Response frame from the IUT with OldUNA='TESTER_ADDRESS'.



Copyright International Organization for Standardization
Provided by IHS under license with ISO
No reproduction or networking permitted without license from IHS
Not for Resale

**Test Case Dynamic Behavior**

**Test Case Name** : Old_DNA
**Group** : FDDI/FBM/PMF/GET/response/
**Purpose** : Verify that the IUT has a invalid its fddiMACDownstreamNbr when T_NN_OUT timer expires and stores to fddiOldDownsteamNbr.
**Default** :
**Comment** :

| Nr | Label | Behavior Description | Constraints Ref | Verdict | Comments |
|---|---|---|---|---|---|
| 1 | | +RING_OP | | | |
| 2 | | !NIF_Frame | NIF_TST_Req_01 | | (1) |
| 3 | | START TIMER228 | | | |
| 4 | L0 | ?NIF_Frame | NIF_IUT_Res_01 | | (2) |
| 5 | | GOTO L0 | | | |
| 6 | | ?OTHERWISE | | | |
| 7 | | GOTO L0 | | | |
| 8 | | ?TIMEOUT TIMER228 | | | (3) |
| 9 | | !PMFGetRequest_Frame | PMF_Request_07 | | (4) |
| 10 | | START TIMER30 | | | |
| 11 | L1 | ?PMFGetResponse_Frame | PMF_Response_08 | PASS | (5) |
| 12 | | ?OTHERWISE | | | |
| 13 | | GOTO L1 | | | |
| 14 | | ?TIMEOUT TIMER30 | | FAIL | |

**Detailed Comments:**

(1) Tester transmits a NIF Request frame.
(2) Tester received a NIF Response frame from the IUT.
(3) Tester strips all frames until timer TNNOUT expires. The IUT should invalidate its current DNA.
(4) Tester transmits a PMF Get Request frame with fddiMACOldDdownstreamNbr parameter to the IUT.
(5) Tester receives a PMF Get Response frame from the IUT with OldDNA='TESTER_ADDRESS'.


Copyright International Organization for Standardization
Provided by IHS under license with ISO
No reproduction or networking permitted without license from IHS
Not for Resale

### 9.4.3 Status Information Frame Test Cases

| Test Case Dynamic Behavior | | | | | |
|---|---|---|---|---|---|
| **Test Case Name** : SIFC_Request1<br>**Group** : FDDI/FBM/SIF/CONF/request/<br>**Purpose** : Verify that the IUT has the capability of generating and transmitting an SIF Configuration Request frame.<br>**Default** :<br>**Comment** : This test only applies to the IUTs which SIF Configuration Request frame is implemented. | | | | | |
| **Nr** | **Label** | **Behavior Description** | **Constraints Ref** | **Verdict** | **Comments** |
| 1 | | +RING_OP | | | |
| 2 | | <IUT!SIF_Frame> | SIF_CONF_Req_IUT | | (1) |
| 3 | | START OPR_TIMER | | | |
| 4 | L1 | ?SIF_Frame | SIF_CONF_Req_IUT | PASS | (2) |
| 5 | | ?OTHERWISE | | | |
| 6 | | GOTO L1 | | | |
| 7 | | ?TIMEOUT OPR_TIMER | | FAIL | (3) |
| **Detailed Comments:**<br>(1) Forcing the IUT to send a SIF Configuration Request frame.<br>(2) Tester received the SIF Configuration Request frame from the IUT.<br>(3) Tester has not received the SIF Configuration Request from the IUT and tester timer has expired thus the IUT fails the test. | | | | | |

| Test Case Dynamic Behavior | | | | | |
|---|---|---|---|---|---|
| **Test Case Name** : SIFC_Resp1<br>**Group** : FDDI/FBM/SIF/CONF/response/<br>**Purpose** : Verify that the IUT has the capability of processing and responding to the SIF Configuration Request frame by transmitting an SIF Configuration Response Frame.<br>**Default** :<br>**Comment** : | | | | | |
| **Nr** | **Label** | **Behavior Description** | **Constraints Ref** | **Verdict** | **Comments** |
| 1 | | +RING_OP | | | |
| 2 | | !SIF_Frame | SIF_CONF_Req_01 | | (1) |
| 3 | | START TIMER30 | | | |
| 4 | L1 | ?SIF_Frame | SIF_CONF_Res_01 | PASS | (2) |
| 5 | | ?OTHERWISE | | | |
| 6 | | GOTO L1 | | | |
| 7 | | ?TIMEOUT TIMER30 | | FAIL | (3) |
| **Detailed Comments:**<br>(1) Tester transmits a SIF Configuration Request frame.<br>(2) Tester received the SIF Configuration Response frame from the IUT.<br>(4) Tester has not received the SIF Configuration Response frame from the IUT and tester timer has expired. | | | | | |



Copyright International Organization for Standardization
Provided by IHS under license with ISO
No reproduction or networking permitted without license from IHS
Not for Resale

**Test Case Dynamic Behavior**

**Test Case Name** : SIFC_Resp2
**Group** : FDDI/FBM/SIF/CONF/response/
**Purpose** : Verify that the IUT has the capability of processing and responding to the SIF Configuration Request frame with FC = '41'H.
**Default** :
**Comment** : To see if the IUT is capable of recognize SIF with FC = '41'H

| Nr | Label | Behavior Description | Constraints Ref | Verdict | Comments |
|---|---|---|---|---|---|
| 1 | | +RING_OP | | | |
| 2 | | !SIF_Frame | SIF_CONF_Req_02 | | (1) |
| 3 | | START TIMER30 | | | |
| 4 | L1 | ?SIF_Frame | SIF_CONF_Res_02 | PASS | (2) |
| 5 | | ?OTHERWISE | | | |
| 6 | | GOTO L1 | | | |
| 7 | | ?TIMEOUT TIMER30 | | FAIL | (3) |

**Detailed Comments:**

(1) Tester transmits a SIF Configuration Request frame.
(2) Tester received the SIF Configuration Response frame from the IUT.
(4) Tester has not received the SIF Configuration Response frame from the IUT and tester timer has expired.

**Test Case Dynamic Behavior**

**Test Case Name** : SIFO_Request1
**Group** : FDDI/FBM/SIF/OPER/response/
**Purpose** : Verify that the IUT has the capability of generating and transmitting an SIF Operation Request frame.
**Default** :
**Comment** :

| Nr | Label | Behavior Description | Constraints Ref | Verdict | Comments |
|---|---|---|---|---|---|
| 1 | | +RING_OP | | | |
| 2 | L1 | <IUT!SIF_Frame> | SIF_OPER_Req_IUT | | |
| 3 | | START OPR_TIMER | | | (1) |
| 4 | | ?SIF_Frame | SIF_OPER_Req_IUT | PASS | (2) |
| 5 | | ?OTHERWISE | | | |
| 6 | | GOTO L1 | | | |
| 7 | | ?TIMEOUT OPR_TIMER | | FAIL | (3) |

**Detailed Comments:**

(1) Forcing the IUT to send a SIF OperationRequest frame.
(2) Tester received the SIF Operation Request frame from the IUT.
(3) Tester has not received the SIF Operation Request from the IUT and tester timer has expired thus the IUT failed the test.


Copyright International Organization for Standardization
Provided by IHS under license with ISO
No reproduction or networking permitted without license from IHS
Not for Resale

| Test Case Dynamic Behavior | | | | | |
|---|---|---|---|---|---|
| **Test Case Name** : SIF_Oper_Response1<br>**Group** : FDDI/FBM/SIF/OPER/response/<br>**Purpose** : Verify that the IUT has the capability of processing and responding to the SIF Operation Request frame by transmitting an SIF Operation Response Frame.<br>**Default** :<br>**Comment** : | | | | | |
| **Nr** | **Label** | **Behavior Description** | **Constraints Ref** | **Verdict** | **Comments** |
| 1 | | +RING_OP | | | |
| 2 | L2 | !SIF_Frame | SIF_OPER_Req_01 | | (1) |
| 3 | | START TIMER30 | | | |
| 4 | L1 | ?SIF_Frame | SIF_OPER_Res_01 | PASS | (2) |
| 5 | | ?OTHERWISE | | | |
| 6 | | GOTO L1 | | | |
| 7 | | ?TIMEOUT TIMER30 | | FAIL | (3) |
| **Detailed Comments:**<br>(1) Tester transmits a SIF Operation Request frame.<br>(2) Tester received the SIF Operation Response frame from the IUT thus the IUT has passed this test.<br>(3) Tester has not received the SIF Operation Response from the IUT and tester timer has expired thus the IUT failed the test. | | | | | |

| Test Case Dynamic Behavior | | | | | |
|---|---|---|---|---|---|
| **Test Case Name** : SIF_Oper_Response2<br>**Group** : FDDI/FBM/SIF/OPER/response/<br>**Purpose** : Verify that the IUT has the capability of processing and responding to the SIF Operation Request frame with FC = ‘41’H.<br>**Default** :<br>**Comment** : To see if the IUT is capable of recognizing SIF with FC = ‘41’H | | | | | |
| **Nr** | **Label** | **Behavior Description** | **Constraints Ref** | **Verdict** | **Comments** |
| 1 | | +RING_OP | | | |
| 2 | | !SIF_Frame | SIF_OPER_Req_02 | | (1) |
| 3 | | START TIMER30 | | | |
| 4 | L1 | ?SIF_Frame | SIF_OPER_Res_02 | PASS | (2) |
| 5 | | ?OTHERWISE | | | |
| 6 | | GOTO L1 | | | |
| 7 | | ?TIMEOUT TIMER30 | | FAIL | (3) |
| **Detailed Comments:**<br>(1) Tester transmits a SIF Operation Request frame.<br>(2) Tester received the SIF Operation Response frame from the IUT.<br>(3) Tester has not received the SIF Operation Response frame from the IUT and tester timer has expired. | | | | | |



Copyright International Organization for Standardization
Provided by IHS under license with ISO
No reproduction or networking permitted without license from IHS
Not for Resale

### 9.4.4 ECHO Test Cases

| Test Case Dynamic Behavior | | | | | |
|---|---|---|---|---|---|
| **Test Case Name** : ECHO_Request1<br>**Group** : FDDI/FBM/ECHO/request/<br>**Purpose** : Verify that the IUT does not transmit an ECF Request frame exceeding the maximum ECF frame length as specified.<br>**Default** :<br>**Comment** : Although this is an optional test for IUTs which implement ECHO Request, the IUT will not forced to exceed the limit of implementation or exceed the frame validity criteria. | | | | | |
| **Nr** | **Label** | **Behavior Description** | **Constraints Ref** | **Verdict** | **Comments** |
| 1 | | +RING_OP | | | |
| 2 | | <IUT!ECF_Frame> | ECHO_VALID | | (1) |
| 3 | | START OPR_TIMER | | | |
| 4 | L0 | ?ECF_Frame | ECHO_VALID | PASS | (2) |
| 5 | | ?OTHERWISE | | | |
| 6 | | GOTO L0 | | | |
| 7 | | ?TIMEOUT OPR_TIMER | | FAIL | (3) |
| **Detailed Comments:**<br>(1) Forcing the IUT to send a valid ECHO Request frame.<br>(2) Tester receives a valid ECHO Request frame from the IUT.<br>(3) The tester timer expired and the tester does not received a valid ECHO frame thus the IUT fails the test. | | | | | |

| Test Case Dynamic Behavior | | | | | |
|---|---|---|---|---|---|
| **Test Case Name** : ECHO_Receive1<br>**Group** : FDDI/FBM/ECHO/response/<br>**Purpose** : Verify that the IUT is capable to receive maximum length of ECHO Request frame and respond with ECHO Response frame.<br>**Default** :<br>**Comment** : SMT 7.1.2.5, maximum size of echo data is 4 454 octets | | | | | |
| **Nr** | **Label** | **Behavior Description** | **Constraints Ref** | **Verdict** | **Comments** |
| 1 | | +RING_OP | | | |
| 2 | | !ECF_Frame | ECHO_MAX | | (1) |
| 3 | | START TIMER30 | | | |
| 4 | L0 | ?ECF_Frame | ECF_IUT_MAX | PASS | (2) |
| 5 | | ?OTHERWISE | | | |
| 6 | | GOTO L0 | | | |
| 7 | | ?TIMEOUT TIMER30 | | FAIL | (3) |
| **Detailed Comments:**<br>(1) The tester transmits a ECF Request frame with maximum echo data length to the IUT.<br>(2) The tester receives a ECF Response frame from the IUT, thus the IUT passes the test.<br>(3) The tester timer has been expired and the tester does not received any ECF frame from the IUT, thus the IUT failed the test. | | | | | |



--`,,```,,,,````-`-`,,`,,`,`,,`---
Copyright International Organization for Standardization
Provided by IHS under license with ISO
No reproduction or networking permitted without license from IHS
Not for Resale

**Test Case Dynamic Behavior**

**Test Case Name** : ECHO_Receive2
**Group** : FDDI/FBM/ECHO/response/
**Purpose** : Verify that the IUT does not process an ECF Request frame exceeding the maximum ECF frame length as specified.
**Default** :
**Comment** : SMT 7.1.2.5.

| Nr | Label | Behavior Description | Constraints Ref | Verdict | Comments |
|---|---|---|---|---|---|
| 1 | | +RING_OP | | | |
| 2 | | !ECF_Frame | ECHO_INVALID | | (1) |
| 3 | | START TIMER30 | | | |
| 4 | L0 | ?ECF_Frame | ECHO_INVALID | FAIL | (2) |
| 5 | | ?ECF_Frame | ECHO_IUT_MAX | PASS | (3) |
| 6 | | ?RDF_Frame | | PASS | (4) |
| 7 | | ?OTHERWISE | | | |
| 8 | | GOTO L0 | | | |
| 9 | | ?TIMEOUT TIMER30 | | FAIL | (5) |

**Detailed Comments:**

(1) Tester transmits a ECF Request frame exceeding maximum ECF frame length to the IUT.
(2) Tester receives a untruncated ECF Response frame from the IUT.
(3) Tester receives a truncated ECF Response frame from the IUT as an implementer's option.
(4) Tester receives a RDF frame from the IUT with ‘Reason:LengthError’.
(5) The tester timer has been expired and the tester does not received any ECF frame from the IUT.



Copyright International Organization for Standardization
Provided by IHS under license with ISO
No reproduction or networking permitted without license from IHS
Not for Resale

### 9.4.5 Resource Allocation Frame Test Cases (Optional)

**Test Case Dynamic Behavior**

**Test Case Name** : SBA_REQ_Req1
**Group** : FDDI/FBM/RAF/ALLOC/request/
**Purpose** : To verify that the IUT does not initiate synchronous transmission before receiving an allocation of synchronous bandwidth from the allocator.
**Default** :
**Comment** : SMT 7.2.4.1. This is an optional test for the IUTs which implement dynamic allocation of SBA. Tester is an allocator.

| Nr | Label | Behavior Description | Constraints Ref | Verdict | Comments |
|---|---|---|---|---|---|
| 1 | | +RING_OP | | | |
| 2 | | <IUT!SBA_Frame> | SBA_ALOC_Request00 | | (1) |
| 3 | | OPR_TIMER | | | |
| 4 | L0 | ?SBA_Frame | SBA_ALOC_Request00 | | (2) |
| 5 | | !SBA_Frame | SBA_ALOC_Response00 | | |
| 6 | | START TIMER30 | SYNC_Frame00 | FAIL | (3) |
| 7 | | ?SYNC_Frame | | | |
| 8 | | ?OTHERWISE | | | |
| 9 | | GOTO L0 | | | (4) |
| | | ?TIMEOUT TIMER30 | | PASS | |
| | | ?TIMEOUT OPR_TIMER | | FAIL | (5) |

**Detailed Comments:**
(1) Force IUT to transmit SBA Resource Allocation Request Frame with SBA Command Value of RequestAllocation (X'0001').
(2) Tester sends SBA Resource Allocation Response frame with no allocatable bandwidth.
(3) The IUT ignored the allocator (Tester), and transmits synchronous frame thus failed the test.
(4) The IUT does not send any Synchronous Frame thus passed the test.
(5) The Tester did not received any SBA Request frame from the IUT thus the IUT fails the test.


Copyright International Organization for Standardization
Provided by IHS under license with ISO
No reproduction or networking permitted without license from IHS
Not for Resale

| Test Case Dynamic Behavior | | | | | |
|---|---|---|---|---|---|
| **Test Case Name** : SBA_REQ_Resp1<br>**Group** : FDDI/FBM/RAF/ALLOC/response/<br>**Purpose** : To verify that the IUT generates RAF Response (Request Allocation) with Destination Address = (Tester Address) and SBA Command = X'0001' when it receives an RAF Request (Request Allocation) from the tester.<br>**Default** :<br>**Comment** : SMT 7.2.4.2. IUT is the allocator | | | | | |
| **Nr** | **Label** | **Behavior Description** | **Constraints Ref** | **Verdict** | **Comments** |
| 1 | | +RING_OP | | | |
| 2 | | !SBA_Frame | SBA_ALOC_Request01 | | (1) |
| 3 | | START TIMER30 | | | |
| 4 | L1 | ?SBA_Frame | SBA_ALOC_Response01 | PASS | (2) |
| 5 | | ?OTHERWISE | | | |
| 6 | | GOTO L1 | | | |
| 7 | | ?TIMEOUT TIMER30 | | FAIL | (3) |
| **Detailed Comments:**<br>(1) The tester transmits SBA Resource Allocation Request, Request Frame with SBA Command Value of Request Allocation (X'0001').<br>(2) The tester received SBA Resource Allocation Request Response Frame from the IUT, thus the IUT has passed the test.<br>(3) The tester has not received SBA Resource Allocation Request Response Frame from the IUT and test timer has expired, thus the IUT has failed the test. | | | | | |

| Test Case Dynamic Behavior | | | | | |
|---|---|---|---|---|---|
| **Test Case Name** : SBA_REP_Req1<br>**Group** : FDDI/FBM/RAF/REPORT/request/<br>**Purpose** : To verify that the IUT generates RAF Request (Report Allocation)with Destination Address = (Tester Address) and SBA Command = X'0002'.<br>**Default** :<br>**Comment** : SMT 7.2.4.1 | | | | | |
| **Nr** | **Label** | **Behavior Description** | **Constraints Ref** | **Verdict** | **Comments** |
| 1 | | +RING_OP | | | |
| 2 | L1 | <IUT!SBA_Frame> | SBA_REP_Request1 | | (1) |
| 3 | | START OPR_TIMER | | | |
| 4 | | ?SBA_Frame | SBA_REP_Request1 | PASS | (2) |
| 5 | | ?OTHERWISE | | | |
| 6 | | GOTO L1 | | | |
| 7 | | ?TIMEOUT OPR_TIMER | | FAIL | (3) |
| **Detailed Comments:**<br>(1) Forcing the IUT to transmit SBA Resource Allocation Report Request Frame with SBA Command Value of Report Allocation (X'0002').<br>(2) The tester received SBA Resource Allocation Report Response Frame from the IUT, thus the IUT has passed the test.<br>(3) The tester has not received SBA Resource Allocation Report Response Frame from the IUT and test timer has expired, thus the IUT has failed the TEST. | | | | | |



Copyright International Organization for Standardization
Provided by IHS under license with ISO
No reproduction or networking permitted without license from IHS
Not for Resale

**Test Case Dynamic Behavior**

**Test Case Name** : SBA_REP_Resp1
**Group** : FDDI/FBM/RAF/REPORT/response/
**Purpose** : To verify that the IUT generates RAF Response (Report Allocation) with Destination Address = (Tester Address) and SBA Command = X'0002' when it receives an RAF Request (Report Allocation) from the tester. The IUT's current allocation for non_local data paths is also included in the InfoField.
**Default** :
**Comment** : SMT 7.2.4.2

| Nr | Label | Behavior Description | Constraints Ref | Verdict | Comments |
|---|---|---|---|---|---|
| 1 | | +RING_OP | | | |
| 2 | L1 | !SBA_Frame | SBA_REP_Request01 | | (1) |
| 3 | | START TIMER30 | | | |
| 4 | | ?SBA_Frame | SBA_REP_Response01 | PASS | (2) |
| 5 | | ?OTHERWISE | | | |
| 6 | | GOTO L1 | | | |
| 7 | | ?TIMEOUT TIMER30 | | FAIL | (3) |

**Detailed Comments:**
(1) The tester transmits SBA Resource Allocation Report Request Frame with SBA Command Value of Report Allocation (X'0002').
(2) The tester received SBA Resource Allocation Report Response Frame from the IUT, thus the IUT has passed the test.
(3) The tester has not received SBA Resource Allocation Report Response Frame from the IUT and test timer has expired, thus the IUT has failed the test.


Copyright International Organization for Standardization
Provided by IHS under license with ISO
No reproduction or networking permitted without license from IHS
Not for Resale

| Test Case Dynamic Behavior | | | | | |
|---|---|---|---|---|---|
| **Test Case Name** : SBA_CHG_Req1<br>**Group** : FDDI/FBM/RAF/CHANGE/request/<br>**Purpose** : To verify that the IUT generates RAF Request (Change Allocation) with Destination Address = (Tester Address) and SBA Command = X'0003'.<br>**Default** :<br>**Comment** : SMT 7.2.4.1 | | | | | |
| **Nr** | **Label** | **Behavior Description** | **Constraints Ref** | **Verdict** | **Comments** |
| 1 | | +RING_OP | | | |
| 2 | L1 | <IUT!SBA_Frame> | SBA_CHG_Request01 | | (1) |
| 3 | | START OPR_TIMER | | | |
| 4 | | ?SBA_Frame | SBA_CHG_Request01 | PASS | (2) |
| 5 | | ?OTHERWISE | | | |
| 6 | | GOTO L1 | | | |
| 7 | | ?TIMEOUT OPR_TIMER | | FAIL | (3) |
| **Detailed Comments:**<br>(1) Forcing the IUT to transmit SBA Resource Allocation Change Request Frame with SBA Command Value of Change Allocation (X'0003').<br>(2) The tester received SBA Resource Allocation Change Request Frame from the IUT, thus the IUT has passed the test.<br>(3) The tester has not received SBA Resource Allocation Change Request Frame from the IUT and test timer has expired, thus the IUT has failed the test. | | | | | |

| Test Case Dynamic Behavior | | | | | |
|---|---|---|---|---|---|
| **Test Case Name** : SBA_CHG_Resp1<br>**Group** : FDDI/FBM/RAF/CHANGE/response/<br>**Purpose** : To verify that the IUT generates RAF Response (Change Allocation) with Destination Address = (Tester Address) and SBA Command = X'0003' when it receives an RAF Request (Change Allocation) from the tester.<br>**Default** :<br>**Comment** : SMT 7.2.4.2 | | | | | |
| **Nr** | **Label** | **Behavior Description** | **Constraints Ref** | **Verdict** | **Comments** |
| 1 | | +RING_OP | | | |
| 2 | L1 | !SBA_Frame | SBA_CHG_Request01 | | (1) |
| 3 | | START TIMER30 | | | |
| 4 | | ?SBA_Frame | SBA_CHG_Response00 | PASS | (2) |
| 5 | | ?OTHERWISE | | | |
| 6 | | GOTO L1 | | | |
| 7 | | ?TIMEOUT TIMER30 | | FAIL | (3) |
| **Detailed Comments:**<br>(1) The tester transmits SBA Resource Allocation Change Request Frame with SBA Command Value of Change Allocation (X'0003').<br>(2) The tester received SBA Resource Allocation Change Response Frame from the IUT, thus the IUT has passed the test.<br>(3) The tester has not received SBA Resource Allocation Change Response Frame from the IUT and test timer has expired, thus the IUT has failed the test. | | | | | |

--`,,```,,,,````-`-`,,`,,`,`,,`---



Copyright International Organization for Standardization
Provided by IHS under license with ISO
No reproduction or networking permitted without license from IHS
Not for Resale

### 9.4.6 Extended Service Frame Test Cases (Optional)

| Test Case Dynamic Behavior | | | | | |
|---|---|---|---|---|---|
| **Test Case Name** : ESF_Request1<br>**Group** : FDDI/FBM/ESF/request/<br>**Purpose** : Verify that the IUT has the capability of transmitting an optional ESF Request frame as specified.<br>**Default** :<br>**Comment** : SMT 7.2.6. This is an optional test for the IUT implementing ESF | | | | | |
| **Nr** | **Label** | **Behavior Description** | **Constraints Ref** | **Verdict** | **Comments** |
| 1 | | +RING_OP | | | |
| 2 | | <IUT!ESF_Frame> | ESF_Request | | (1) |
| 3 | L0 | START OPR_TIMER | | | |
| 4 | | ?ESF_Frame | ESF_Request | PASS | (2) |
| 5 | | ?OTHERWISE | | | |
| 6 | | GOTO L0 | | | |
| 7 | | ?TIMEOUT OPR_TIMER | | FAIL | (3) |
| **Detailed Comments:**<br>(1) The IUT transmits ESF request frame to the IUT.<br>(2) The tester has received a ESF Request frame from the IUT, thus the IUT has passed the test.<br>(3) The tester timer has been expired and the tester has not received a ESF Request frame from the IUT, thus IUT fails the test. | | | | | |



Copyright International Organization for Standardization
Provided by IHS under license with ISO
No reproduction or networking permitted without license from IHS
Not for Resale

### 9.4.7 Status Report Frame Test Cases

| Test Case Dynamic Behavior | | | | | |
|---|---|---|---|---|---|
| **Test Case Name** : SRF_announce<br>**Group** : FDDI/FBM/SRF/announce/<br>**Purpose** : Verify that the IUT generates a correct SRF announcement frame with universally assigned multicast address (SMT_SRF_DA). Conditions are inserted or deinserted within T_Limit to observe the behavior of the IUT. The IUT should not report more than more than one SRF frame within the T_Limit.<br>**Default** :<br>**Comment** : SMT 7.2.7 | | | | | |
| **Nr** | **Label** | **Behavior Description** | **Constraints Ref** | **Verdict** | **Comments** |
| 1 | | +RING_OP | | | |
| 2 | | <IUT!SRF_Frame> | SRF_Announce | | (1) |
| 3 | L1 | ?SRF_Frame | SRF_Announce | | (2) |
| 4 | L2 | <IUT!ERR_FrameS> | Undesirable1 | | (3) |
| 5 | | START TIMER2 | | | |
| 6 | | ?SRF_FrameS | SRF_Announce | FAIL | (4) |
| 7 | | ?TIMEOUT TIMER2 | | | |
| 8 | | ?SRF_Frame | SRF_Announce | PASS | (5) |
| 9 | | ?OTHERWISE | | | |
| 10 | | GOTO L2 | | | |
| 11 | | ?OTHERWISE | | | |
| 12 | | GOTO L1 | | | |
| **Detailed Comments:**<br>(1) Force the IUT to send SRF announcement frame.<br>(2) Tester received a SRF frame from the IUT.<br>(3) An IUT operator inject erroneous conditions to exceed the IUT's specific error threshold conditions.<br>(4) If the IUT sends more than one SRF frame within2 seconds, the IUT fails this test.<br>(5) The IUT sends only 1 frame within 2 seconds (T_Limit). Thus the IUT passed the test. | | | | | |



Copyright International Organization for Standardization
Provided by IHS under license with ISO
No reproduction or networking permitted without license from IHS
Not for Resale

### 9.4.8 Parameter Management Frame Test Cases

| Test Case Dynamic Behavior | | | | | |
|---|---|---|---|---|---|
| **Test Case Name** : SingleAttribute_TX<br>**Group** : FDDI/FBM/PMF/GET/request/<br>**Purpose** : Verify that the IUT has a capability of generating and transmitting an optional PMF Request frame with a single attribute.<br>**Default** :<br>**Comment** : SMT 7.1.3, and 7.2.8.1. This is an optional test for IUTs which implement PMF Get Request. | | | | | |
| **Nr** | **Label** | **Behavior Description** | **Constraints Ref** | **Verdict** | **Comments** |
| 1 | | +RING_OP | | | |
| 2 | | <IUT!PMFGetRequest_Frame> | PMFGet_Request_07 | | (1) |
| 3 | | START OPR_TIMER | | | |
| 4 | L1 | ?PMFGetRequest_Frame | PMFGet_Request_07 | PASS | (2) |
| 5 | | ?OTHERWISE | | | |
| 6 | | GOTO L1 | | | |
| 7 | | ?TIMEOUT OPR_TIMER | | FAIL | (3) |
| **Detailed Comments:**<br>(1) Forcing the IUT to send a PMF Get Request frame.<br>(2) Tester has received a PMF Get Request frame from the IUT, thus the IUT has passed this test.<br>(3) The tester timer is now expired and the tester has not received the PMF Get Request frame from the IUT, thus the IUT failed test. | | | | | |

| Test Case Dynamic Behavior | | | | | |
|---|---|---|---|---|---|
| **Test Case Name** : MultipleAttribute_TX<br>**Group** : FDDI/FBM/PMF/GET/request/<br>**Purpose** : Verify that the IUT has a capability of generating and transmitting an optional PMF Request frame with multiple attributes.<br>**Default** :<br>**Comment** : SMT 7.1.3, and 7.2.8.1. This is an optional test for IUTs which implement PMF Get Request. | | | | | |
| **Nr** | **Label** | **Behavior Description** | **Constraints Ref** | **Verdict** | **Comments** |
| 1 | | +RING_OP | | | |
| 2 | | <IUT!PMFGetRequest_Frame> | PMFGet_Request_08 | | (1) |
| 3 | | START OPR_TIMER | | | |
| 4 | L1 | ?PMFGetRequest_Frame | PMFGet_Request_08 | PASS | (2) |
| 5 | | ?OTHERWISE | | | |
| 6 | | GOTO L1 | | | |
| 7 | | ?TIMEOUT OPR_TIMER | | FAIL | (3) |
| **Detailed Comments:**<br>(1) Forcing the IUT to send a PMF Get Request frame.<br>(2) Tester has received a PMF Get Request frame from the IUT, thus the IUT has passed this test.<br>(3) The tester timer is now expired and the tester has not received the PMF Get Request frame from the IUT, thus the IUT failed test. | | | | | |


Copyright International Organization for Standardization
Provided by IHS under license with ISO
No reproduction or networking permitted without license from IHS
Not for Resale

**Test Case Dynamic Behavior**

**Test Case Name** : MultipleGroupAttributes_TX
**Group** : FDDI/FBM/PMF/GET/request/
**Purpose** : Verify that the IUT has a capability of generating and transmitting an optional PMF Request frame with multiple group attributes.
**Default** :
**Comment** : SMT 7.1.3, and 7.2.8.1. This is an optional test for IUTs which implement PMF Get Request.

| Nr | Label | Behavior Description | Constraints Ref | Verdict | Comments |
|---|---|---|---|---|---|
| 1 | | +RING_OP | | | |
| 2 | | <IUT!PMFGetRequest_Frame> | PMFGet_Request_09 | | (1) |
| 3 | | START OPR_TIMER | | | |
| 4 | L1 | ?PMFGetRequest_Frame | PMFGet_Request_09 | PASS | (2) |
| 5 | | ?OTHERWISE | | | |
| 6 | | GOTO L1 | | | |
| 7 | | ?TIMEOUT OPR_TIMER | | FAIL | (3) |

**Detailed Comments:**
(1) Forcing the IUT to send a PMF Get Request frame.
(2) Tester has received a PMF Get Request frame from the IUT, thus the IUT has passed this test.
(3) The tester timer is now expired and the tester has not received the PMF Get Request frame from the IUT, thus the IUT failed test.

**Test Case Dynamic Behavior**

**Test Case Name** : SingleAttribute_RX
**Group** : FDDI/FBM/PMF/GET/response/
**Purpose** : Verify that the IUT has a capability of generating and transmitting a PMF Response frame when it receives PMF Get Request frame with a single attribute.
**Default** :
**Comment** : SMT 7.1.3, and 7.2.8.2.

| Nr | Label | Behavior Description | Constraints Ref | Verdict | Comments |
|---|---|---|---|---|---|
| 1 | | +RING_OP | | | |
| 2 | | !PMFGetRequest_Frame | PMFGet_Request_01 | | (1) |
| 3 | | START OPR_TIMER | | | |
| 4 | L1 | ?PMFGetResponse_Frame | PMFGet_Response_01 | PASS | (2) |
| 5 | | ?OTHERWISE | | | |
| 6 | | GOTO L1 | | | |
| 7 | | ?TIMEOUT OPR_TIMER | | FAIL | (3) |

**Detailed Comments:**
(1) Tester sends a PMF Get Request frame to the IUT with a single attribute.
(2) Tester has receives a PMF Get Response frame from the IUT, thus the IUT has passed this test.
(3) The tester timer is now expired and the tester has not received the PMF Get Response frame from the IUT, thus the IUT failed test.



Copyright International Organization for Standardization
Provided by IHS under license with ISO
No reproduction or networking permitted without license from IHS
Not for Resale

| Test Case Dynamic Behavior | | | | | |
|---|---|---|---|---|---|
| **Test Case Name** : MultipleAttribute_RX<br>**Group** : FDDI/FBM/PMF/GET/response/<br>**Purpose** : Verify that the IUT has a capability of generating and transmitting a PMF Response frame when it receives PMF Get Request frame with multiple attributes.<br>**Default** :<br>**Comment** : SMT 7.1.3, and 7.2.8.2. | | | | | |
| **Nr** | **Label** | **Behavior Description** | **Constraints Ref** | **Verdict** | **Comments** |
| 1 | | +RING_OP | | | |
| 2 | | !PMFGetRequest_Frame | PMFGet_Request_08.5 | | (1) |
| 3 | | START TIMER30 | | | |
| 4 | L1 | ?PMFGetResponse_Frame | PMFGet_Response_08.5 | PASS | (2) |
| 5 | | ?OTHERWISE | | | |
| 6 | | GOTO L1 | | | |
| 7 | | ?TIMEOUT TIMER30 | | FAIL | (3) |
| **Detailed Comments:**<br>(1) Tester sends a PMF Get Request frame.<br>(2) Tester has received a PMF Get Response frame from the IUT, thus the IUT has passed this test.<br>(3) The tester timer is now expired and the tester has not received the PMF Get Request frame from the IUT, thus the IUT failed test. | | | | | |

| Test Case Dynamic Behavior | | | | | |
|---|---|---|---|---|---|
| **Test Case Name** : MultipleGroupAttributes_RX<br>**Group** : FDDI/FBM/PMF/GET/response/<br>**Purpose** : Verify that the IUT has a capability of generating and transmitting a PMF Response frame when it receives PMF Get Request frame with multiple group attributes.<br>**Default** :<br>**Comment** : SMT 7.1.3, and 7.2.8.2. | | | | | |
| **Nr** | **Label** | **Behavior Description** | **Constraints Ref** | **Verdict** | **Comments** |
| 1 | | +RING_OP | | | |
| 2 | | <IUT!PMFGetRequest_Frame> | PMFGet_Request_09.5 | | (1) |
| 3 | | START TIMER30 | | | |
| 4 | L1 | ?PMFGetRequest_Frame | PMFGet_Response_09.5 | PASS | (2) |
| 5 | | ?OTHERWISE | | | |
| 6 | | GOTO L1 | | | |
| 7 | | ?TIMEOUT TIMER30 | | FAIL | (3) |
| **Detailed Comments:**<br>(1) Tester sends a PMF Get Request frame.<br>(2) Tester has receives a PMF Get Response frame from the IUT, thus the IUT has passed this test.<br>(3) The tester timer is now expired and the tester has not received the PMF Get Response frame from the IUT, thus the IUT failed test. | | | | | |


Copyright International Organization for Standardization
Provided by IHS under license with ISO
No reproduction or networking permitted without license from IHS
Not for Resale

**Test Case Dynamic Behavior**

**Test Case Name** : InvalidMultipleGroupAttributes_RX
**Group** : FDDI/FBM/PMF/GET/response/
**Purpose** : Verify that the IUT generates and transmits either a PMF Response frame with reasoncode = 'no parameter' when it receives a PMF Get Request frame with resource index of zero and non-zero attributes within a single frame.
**Default** :
**Comment** : SMT 7.1.3, and 7.2.8.2.

| Nr | Label | Behavior Description | Constraints Ref | Verdict | Comments |
|---|---|---|---|---|---|
| 1 | | +RING_OP | | | |
| 2 | | !PMFGetRequest_Frame | PMFGet_Request_0A.5 | | (1) |
| 3 | | START TIMER30 | | | |
| 4 | L1 | ?PMFGetResponse_Frame | PMFGet_Response_0A.5 | PASS | (2) |
| 5 | | ?OTHERWISE | | | |
| 6 | | GOTO L1 | | | |
| 7 | | ?TIMEOUT TIMER30 | | FAIL | (3) |

**Detailed Comments:**
(1) Tester sends a PMF Get Request frame.
(2) Tester has received a PMF Get Response frame from the IUT, thus the IUT has passed this test.
(3) The tester timer is now expired and the tester has not received the PMF Get Response frame from the IUT, thus the IUT failed test.



Copyright International Organization for Standardization
Provided by IHS under license with ISO
No reproduction or networking permitted without license from IHS
Not for Resale

# 10 Management Information Base (MIB) - Abstract Test Suite

## 10.1 Test Suite Overview

### 10.1.1 Test Suite Structure

| Test Suite Structure | | | |
|---|---|---|---|
| **Suite Name** : FDDI_MIB<br>**Standards ref.** : ISO/IEC 9314-6:1998<br>**PICS proforma ref.** : ISO/IEC 9314-13:1997<br>**PIXIT proforma ref.** : Annex B of this standard.<br>**PICS/PIXIT use** : Test case selection and test suite parameters.<br>**Test Method(s)** : Remote Single Layer Method<br>**Comments** : | | | |
| **Test Group Reference** | **Selection Ref.** | **Test Group Objective** | **Page** |
| FDDI_MIB/MIBGroups | | Test elements of a MIB attribute group. | 827 |
| FDDI_MIB/SMT | | Test SMT attributes. | 827 |
| FDDI_MIB/MAC | | Test MAC attributes. | 845 |
| FDDI_MIB/PATH | | Test PATH attributes. | 875 |
| FDDI_MIB/PORT | | Test PORT attributes. | 878 |
| FDDI_MIB/ACTIONS_NOTI-FICATIONS | | Test actions and notifications. | 888 |



Copyright International Organization for Standardization
Provided by IHS under license with ISO
No reproduction or networking permitted without license from IHS
Not for Resale

### 10.1.2 Test Case Index

| Test Case Index | | | | |
|---|---|---|---|---|
| **Test Group Reference** | **Test Case Id** | **Selection Ref.** | **Description** | **Page** |
| FDDI_MIB/MIBGroups | fddiMIBAttrGrps | | Verify elements of an SMT, MAC, PATH or PORT attribute group contained in the IUT Management Information Base. | 827 |
| FDDI_MIB/SMT | fddiSMTStationId | | Compare the fddiSMTStationId to the Station ID of the IUT's frame. | 827 |
| FDDI_MIB/SMT | fddiSMTManufacturer-Data | | Verify manufacturer data contained in the IUT Management Information Base. | 828 |
| FDDI_MIB/SMT | fddiSMTMIBVersionId | | Verify MIB Version ID of the IUT. | 828 |
| FDDI_MIB/SMT | fddiSMTUserData | | Verify that the SMTUserData attribute of the IUT can be modified using a PMF Set protocol. | 829 |
| FDDI_MIB/SMT | fddiSMTMac_Ct | | Verify number of MACs in the IUT. | 829 |
| FDDI_MIB/SMT | fddiSMTNonMaster_Ct | | Verify number of A, B, and S ports in the IUT. | 830 |
| FDDI_MIB/SMT | fddiSMTMaster_Ct | | Verify number of M ports in the IUT. | 830 |
| FDDI_MIB/SMT | fddiSMTAvailablePaths | | Verify available paths in the IUT. | 831 |
| FDDI_MIB/SMT | fddiSMTConfig-Capabilities | | Verify configuration capabilities of the IUT. | 831 |
| FDDI_MIB/SMT | fddiSMTConnection-Policy | | Verify that fddiSMTConnectionPolicy attribute can be modified using PMF Set protocol. | 832 |
| FDDI_MIB/SMT | fddiSMTT_Notify | | Verify that fddiSMTT_Notify attribute can be modified using PMF Set protocol. | 833 |
| FDDI_MIB/SMT | fddiSMTStatRptPolicy | | Verify that fddiSMTStatRptPolicy attribute can be modified using PMF Set protocol. | 833 |
| FDDI_MIB/SMT | fddiSMTTrace_Max-Expiration | | Verify that fddiSMTTrace_MaxExpiration attribute can be modified using PMF Set protocol. | 834 |

Continued on next page ....



Copyright International Organization for Standardization
Provided by IHS under license with ISO
No reproduction or networking permitted without license from IHS
Not for Resale

..... Continued from previous page.

| Test Group Reference | Test Case Id | Selection Ref. | Description | Page |
|---|---|---|---|---|
| FDDI_MIB/SMT | fddiSMTCF_State_T | | Check the CF_State of a SM-DAS inThru configuration. | 835 |
| FDDI_MIB/SMT | fddiSMTCF_State_CWA | | Check the CF_State of a SM-DAS in c_wrap_a configuration. | 836 |
| FDDI_MIB/SMT | fddiSMTCF_State_CWB | | Check the CF_State of a SM-DAS in c_wrap_b configuration. | 836 |
| FDDI_MIB/SMT | fddiSMTCF_State_WS | | Check the CF_State of a SM-DAS in wrap_s configuration. | 837 |
| FDDI_MIB/SMT | fddiSMTCF_State_WAB | | Check the CF_State of a DM-DAS in wrap_ab configuration. | 837 |
| FDDI_MIB/SMT | fddiSMTHoldState_Prm | | Check the initial value of the HoldState. If the initial value is “not_holding” and the Hold function is implemented, interrupt the link exiting from the Tester A port, so that the input to the IUT B port is dark. Verify that now “holding_prm” is the value of the HoldState. | 838 |
| FDDI_MIB/SMT | fddiSMTHoldState_Sec | | Check the initial value of the HoldState. If the initial value is “not_holding” and the Hold function is implemented, interrupt the link exiting from the Tester B port, so that the input to the IUT A port is dark. Verify that now “holding_sec” is the value of the HoldState. | 839 |
| FDDI_MIB/SMT | fddiSMTStationStatus_T | | Check the current status of the primary and secondary paths within the IUT in the Thru configuration. | 840 |

Continued on next page .....



--`,,```,,,,````-`-`,,`,,`,`,,`---
Copyright International Organization for Standardization
Provided by IHS under license with ISO
No reproduction or networking permitted without license from IHS
Not for Resale

..... Continued from previous page.

| Test Group Reference | Test Case Id | Selection Ref. | Description | Page |
|---|---|---|---|---|
| FDDI_MIB/SMT | fddiSMTStation-Status_S1 | | Check the current status of the primary and secondary paths within the IUT in the wrap_a configuration. | 841 |
| FDDI_MIB/SMT | fddiSMTStation-Status_S2 | | Check the current status of the primary and secondary paths within the IUT in the wrap_b configuration. | 842 |
| FDDI_MIB/SMT | fddiSMTStation-Status_C | | Check the current status of the primary and secondary paths within the IUT in the c_wrap_a configuration. | 843 |
| FDDI_MIB/SMT | fddiSMTPeerWrap-Flag_DAS | | Check the value of PeerWrapFlag for different configurations. | 844 |
| FDDI_MIB/SMT | fddiSMTPeerWrap-Flag_SAS | | Check the value of PeerWrapFlag for different configurations. | 845 |
| FDDI_MIB/MAC | fddiMACBridge-Functions | | Verify the bridge type of the IUT. | 845 |
| FDDI_MIB/MAC | fddiMACT_Max-Capability | | Verify the maximum T_Max value of an IUT's MAC. | 846 |
| FDDI_MIB/MAC | fddiMACTVXCapa-bility | | Verify the maximum TVX time value of an IUT's MAC. | 846 |
| FDDI_MIB/MAC | fddiMACAvailable-Paths | | Verify paths available for an IUT's MAC. | 847 |
| FDDI_MIB/MAC | fddiMACCurrentPath | | Verify the path into which an IUT's MAC is currently inserted. | 847 |
| FDDI_MIB/MAC | fddiMACUpstreamNbr | | To compare fddiMACUpstreamNbr with a known upstream neighbor address. | 848 |
| FDDI_MIB/MAC | fddiMACDownstream-Nbr | | To compare fddiMACDownstreamNbr with a known downstream neighbor address. | 849 |
| FDDI_MIB/MAC | fddiMACOldUpstream-Nbr | | Verify the previous known upstream neighbor of the IUT. | 850 |
| FDDI_MIB/MAC | fddiMACOldDown-streamNbr | | Verify the previous known downstream neighbor of the IUT. | 851 |
| FDDI_MIB/MAC | fddiMACDupAddress-Test1 | | Verify the MACDupAddressTest of the IUT when there is no duplicate address on the ring. | 852 |
| FDDI_MIB/MAC | fddiMACDupAddress-Test2 | | Verify the MACDupAddressTest of the IUT when there is a duplicate address on the ring. | 853 |

Continued on next page .....

--`,,```,,,,````-`-`,,`,,`,`,,`---



Copyright International Organization for Standardization
Provided by IHS under license with ISO
No reproduction or networking permitted without license from IHS
Not for Resale

..... Continued from previous page.

| Test Group Reference | Test Case Id | Selection Ref. | Description | Page |
|---|---|---|---|---|
| FDDI_MIB/MAC | fddiMACRequested-paths | | Verify that the fddiMACRequestPaths attribute of the IUT can be modified using the PMF Set protocol. | 854 |
| FDDI-MIB/MAC | fddiMACDownstream-PORTType | | Verify the exit port of an IUT MAC. | 854 |
| FDDI_MIB/MAC | fddiMACIndex | | Verify the MACIndex attribute of the IUT. | 855 |
| FDDI_MIB/MAC | fddiMACSMTAddr | | To compare fddiMACSMTAddress to the source address of the frame received. | 855 |
| FDDI_MIB/MAC | fddiMACLongGrp-Address | | Verify the MAC long group address used by the IUT. | 856 |
| FDDI_MIB/MAC | fddiMACShortGrp-Address | | Verify the MAC short group address used by the IUT. | 856 |
| FDDI_MIB/MAC | fddiMACT_Req | | Verify the T_Req value passed to the IUT MAC. | 857 |
| FDDI_MIB/MAC | fddiMACT_Neg | | Verify the T_Neg value of the IUT. | 857 |
| FDDI_MIB/MAC | fddiMACT_Max | | Verify the T_Max value passed to the IUT MAC. | 858 |
| FDDI_MIB/MAC | fddiMACTvxValue | | Verify the TvxValue passed to the IUT MAC. | 858 |
| FDDI_MIB/MAC | fddiMACT_Pri0 | | Verify the T_Pri0 value of the IUT MAC. | 859 |
| FDDI_MIB/MAC | fddiMACT_Pri1 | | Verify the T_Pri1 value of the IUT MAC. | 859 |
| FDDI_MIB/MAC | fddiMACT_Pri2 | | Verify the T_Pri2 value of the IUT MAC. | 860 |
| FDDI_MIB/MAC | fddiMACT_Pri3 | | Verify the T_Pri3 value of the IUT MAC. | 860 |
| FDDI_MIB/MAC | fddiMACT_Pri4 | | Verify the T_Pri4 value of the IUT MAC. | 861 |
| FDDI_MIB/MAC | fddiMACT_Pri5 | | Verify the T_Pri5 value of the IUT MAC. | 861 |

Continued on next page .....



Copyright International Organization for Standardization
Provided by IHS under license with ISO
No reproduction or networking permitted without license from IHS
Not for Resale

..... Continued from previous page.

| Test Group Reference | Test Case Id | Selection Ref. | Description | Page |
|---|---|---|---|---|
| FDDI_MIB/MAC | fddiMACT_Pri6 | | Verify the T_Pri6 value of the IUT MAC. | 862 |
| FDDI_MIB/MAC | fddiMACFrame_Ct | | Verify a count of the number of frames received by the IUT MAC. | 863 |
| FDDI_MIB/MAC | fddiMACCopied_Ct | | Verify a count of the number of frames addressed to and successfully copied into the IUT receive buffers by the IUT MAC. | 864 |
| FDDI_MIB/MAC | fddiMACTransmit_Ct | | Verify a count of the number frames transmitted by the IUT MAC. | 865 |
| FDDI_MIB/MAC | fddiMACToken_Ct | | Verify a count of the number of tokens received by the IUT MAC. | 866 |
| FDDI_MIB/MAC | fddiMACError_Ct | | Verify a count of the number of frames that were detected in error by the IUT MAC that had not been detected in error by another MAC. | 867 |
| FDDI_MIB/MAC | fddiMACLost_Ct | | Verify a count of the number of instances that the IUT MAC detected a format error during frame reception such that the frame was stripped. | 868 |
| FDDI_MIB/MAC | fddiMACTvxExpired_Ct | | Check a count of the number of times that TVX has expired. | 869 |
| FDDI_MIB/MAC | fddiMACLate_Ct | | Check a count of the number TRT expirations since the IUT MAC was reset or a token was received. | 870 |
| FDDI_MIB/MAC | fddiMACRMTState | | Check the current state of the IUT RMT state machine. | 871 |
| FDDI_MIB/MAC | fddiMACDA_Flag | | Check the current RMT Duplicate Address flag (DA_Flag) of the IUT. | 871 |
| FDDI_MIB/MAC | fddiMACUNDA_Flag1 | | Check the current UNDA_Flag of the IUT when there is no duplicate address on the ring. | 872 |
| FDDI_MIB/MAC | fddiMACUNDA_Flag2 | | Check the current UNDA_Flag of the IUT when there is a duplicate address on the ring. | 872 |

Continued on next page .....



Copyright International Organization for Standardization
Provided by IHS under license with ISO
No reproduction or networking permitted without license from IHS
Not for Resale

..... Continued from previous page.

| Test Group Reference | Test Case Id | Selection Ref. | Description | Page |
|---|---|---|---|---|
| FDDI_MIB/MAC | fddiMACFrameError-Flag | | Check the current frame error flag of the IUT. | 873 |
| FDDI_MIB/MAC | fddiMACMA_Unitdata-Available | | Check the current MAC_Available flag of the IUT. | 873 |
| FDDI_MIB/MAC | fddiMACHardware-Present | | Check the presence of underlying hardware support for the IUT MAC object. | 874 |
| FDDI_MIB/MAC | fddiMACMA_Unitdata-Enable | | Check the current MA_UNITDATA_Enable flag of the IUT. | 874 |
| FDDI_MIB/PATH | fddiPATHIndex | | Check the current PATHIndex of the IUT. | 875 |
| FDDI_MIB/PATH | fddiPATHRingLatency | | Check the current accumulated latency of the ring associated with the current IUT path. | 875 |
| FDDI_MIB/PATH | fddiPATHT_Rmode | | Verify that the duration of restricted dialog on a path can be modified using PMF Set protocol. | 876 |
| FDDI_MIB/PATH | fddiPATHTVXLower-Bound | | Check the current PATHTVXLowerBound of the IUT. | 876 |
| FDDI_MIB/PATH | fddiPATHT_MaxLower-Bound | | Check the current PATHT_MaxLowerBound of the IUT. | 877 |
| FDDI_MIB/PATH | fddiPATHMaxT_Req | | Check the current PATHMaxT_Req of the IUT. | 877 |
| FDDI_MIB/PORT | fddiPORTMyType | | Verify the port type of the IUT. | 878 |
| FDDI_MIB/PORT | fddiPORTNeighborType | | Verify the neighbor port type of the IUT. | 878 |
| FDDI_MIB/PORT | fddiPORTCurrentPath | | To check a current path of a port. | 879 |
| FDDI_MIB/PORT | fddiPORTRequested-Paths_A | | Check the requested paths of the IUT port A. | 879 |
| FDDI_MIB/PORT | fddiPORTRequested-Paths_B1 | | Check the requested paths of IUT port B. | 880 |
| FDDI_MIB/PORT | fddiPORTRequested-Paths_B2 | | Check the requested paths of IUT port B. | 880 |
| FDDI_MIB/PORT | fddiPORTRequested-Paths_S | | Check the requested paths of IUT port S. | 881 |

Continued on next page .....



Copyright International Organization for Standardization
Provided by IHS under license with ISO
No reproduction or networking permitted without license from IHS
Not for Resale

..... Continued from previous page.

| Test Group Reference | Test Case Id | Selection Ref. | Description | Page |
|---|---|---|---|---|
| FDDI_MIB/PORT | FddiPORTRequested-Paths_M | | Check the requested paths of IUT port M. | 881 |
| FDDI_MIB/PORT | FddiPORTMAC-Placement | | To check a MAC whose transmit path exits the station via a known port. | 882 |
| FDDI_MIB/PORT | fddiPORTAvailablePaths | | Check the available paths of IUT port A (or port B). | 882 |
| FDDI_MIB/PORT | fddiPORTMAC-Loop_Time | | Verify that the value of MAC Local Loop time, T_Next(9), can be modified using the PMF Set protocol. | 883 |
| FDDI_MIB/PORT | fddiPORTPMDClass | | To check the PMD type of a port. | 883 |
| FDDI_MIB/PORT | fddiPORTIndex | | Check the index for PORT object instances of the IUT. | 884 |
| FDDI_MIB/PORT | fddiPORTPC_LS | | Check the current line state received by an IUT port. | 884 |
| FDDI_MIB/PORT | fddiPORTLer_Cutoff | | Check the link error rate estimate, at which a link connection will be broken, of an IUT port. | 885 |
| FDDI_MIB/PORT | fddiPORTLer_Alarm | | Check the link error rate estimate, at which a link connection will generate an alarm, of an IUT port. | 885 |
| FDDI_MIB/PORT | fddiPORTConnectState | | Check the current connect state of an IUT port. | 886 |
| FDDI_MIB/PORT | fddiPORTPCMState | | Check the current PCM state of an IUT port. | 886 |
| FDDI_MIB/PORT | fddiPORTPC_Withhold | | Check the PC_Withhold value of an IUT port. | 887 |
| FDDI_MIB/PORT | fddiPORTHardware-Present | | Check the presence of underlying hardware support for an IUT port object. | 887 |
| FDDI_MIB/-ACTIONS_NO-TIFICATIONS | fddiSMTStation-Action_DA | | Verify that Disable_A action can be invoked using the PMF Set protocol. | 888 |
| FDDI_MIB/-ACTIONS_NO-TIFICATIONS | fddiSMTStation-Action_DB | | Verify that Disable_B action can be invoked using the PMF Set protocol. | 888 |

Continued on next page .....



Copyright International Organization for Standardization
Provided by IHS under license with ISO
No reproduction or networking permitted without license from IHS
Not for Resale

..... Continued from previous page.

| Test Group Reference | Test Case Id | Selection Ref. | Description | Page |
|---|---|---|---|---|
| FDDI_MIB/-ACTIONS_-NOTIFICATIONS | FddiSMTHold-Condition_Prm | | Check the initial value of the HoldState. If the initial value is “not_holding” and the Hold function is implemented, interrupt the link exiting from the Tester A port, so that the input to the IUT B port is dark. Verify that IUT enters the “holding_prm” state and transmits an SRF with the Hold condition asserted. | 889 |
| FDDI_MIB/-ACTIONS_-NOTIFICATIONS | fddiSMTHold-Condition_Sec | | Check the initial value of the HoldState. If the initial value is “not_holding” and the Hold function is implemented, interrupt the link exiting from the Tester B port, so that the input to the IUT A port is dark. Verify that IUT enters the “holding_sec” state and transmits an SRF with the Hold condition asserted. | 890 |
| FDDI_MIB/-ACTIONS_-NOTIFICATIONS | fddiMACDuplicate-AddressCondition | | Verify that MACDuplicateAddressCondition is active when either fddiMACDA_Flag or fddiMACUNDA_Flag is set. | 891 |

## 10.2 Declaration Part

### 10.2.1 Simple Type Definitions

| Simple Type Definitions | | |
|---|---|---|
| **Type Name** | **Type Definition** | **Comments** |
| SYMBOL | BITSTRING[5] | |



Copyright International Organization for Standardization
Provided by IHS under license with ISO
No reproduction or networking permitted without license from IHS
Not for Resale

### 10.2.2 ASN.1 Type Definitions for General Parameters

| ASN.1 Type Definition |
|---|
| **Type Name :** UNA_GENERAL<br>**Comments :** General parameter. |
| **Type Definition** |

```
SEQUENCE    {Parameter_Type      OCTETSTRING(SIZE(2)),
             Parameter_Length    OCTETSTRING(SIZE(2)),
             PAD2                OCTETSTRING(SIZE(2)),
             UNA                 OCTETSTRING(SIZE(6) -- fddiMACUpstreamNbr--}
```

| ASN.1 Type Definition |
|---|
| **Type Name :** StationDescriptor_GENERAL<br>**Comments :** General parameter. |
| **Type Definition** |

```
SEQUENCE    {Parameter_Type              OCTETSTRING(SIZE(2)),
             Parameter_Length            OCTETSTRING(SIZE(2)),
             Node_Class                  OCTETSTRING(SIZE(1)),
               --station = '00'H; concentrator = '01'H--
             Mac_Ct                      OCTETSTRING(SIZE(1)),      --X'00'-X'FF'--
             NonMaster_Ct                OCTETSTRING(SIZE(1)),      --X'00'-X'02'--
             Master_Ct                   OCTETSTRING(SIZE(1))}      --X'00'-X'FF'--
-- When one or more Ports or MACs physically instantiated in the MIB are not physically present,
-- the Mac_Ct, NonMaster_Ct, and Master_Ct will differ from the corresponding MIB attributes.
```

| ASN.1 Type Definition |
|---|
| **Type Name :** StationState_GENERAL<br>**Comments :** General parameter. |
| **Type Definition** |

```
SEQUENCE    {Parameter_Type      OCTETSTRING(SIZE(2)),
             Parameter_Length    OCTETSTRING(SIZE(2)),
             PAD2                OCTETSTRING(SIZE(2)),
             Topology            TopologyType,   --1 octet--
             DuplAddress         DuplAddressType    --1 octet--    }
```

| ASN.1 Type Definition |
|---|
| **Type Name :** MsgTimeStamp_GENERAL<br>**Comments :** General parameter. |
| **Type Definition** |

```
SEQUENCE    {Parameter_Type              OCTETSTRING(SIZE(2)),
             Parameter_Length            OCTETSTRING(SIZE(2)),
             MsgTimeStamp                INTEGER(0..18446744073709551615) --8 octets--
        }
```



Copyright International Organization for Standardization
Provided by IHS under license with ISO
No reproduction or networking permitted without license from IHS
Not for Resale

| ASN.1 Type Definition | | |
|---|---|---|
| **Type Name :** StationPolicies_GENERAL<br>**Comments :** General parameter. | | |
| **Type Definition** | | |
| SEQUENCE {Parameter_Type | OCTETSTRING(SIZE(2)), | |
| Parameter_Length | OCTETSTRING(SIZE(2)), | |
| ConfigPolicy | ConfigPolicyType, --2 octets-- | |
| ConnectionPolicy | ConnectionType --2 octets-- | } |

| ASN.1 Type Definition | | |
|---|---|---|
| **Type Name :** PathLatency_GENERAL<br>**Comments :** General parameter. This parameter is optional. | | |
| **Type Definition** | | |
| SEQUENCE {Parameter_Type | OCTETSTRING(SIZE(2)), | |
| Parameter_Length | OCTETSTRING(SIZE(2)), | |
| PORTOutIndex | OCTETSTRING(SIZE(2)), | |
| PathLatencyRing1 | OCTETSTRING(SIZE(2)), | |
| PORTOutIndex | OCTETSTRING(SIZE(2)), | |
| PathLatencyRing2 | OCTETSTRING(SIZE(2)) | } |
| -- This is the latency contribution of the Paths within the station. It is not a MIB attribute and is<br>-- optional. The latency is given in octet units. The Port indices are those used to form the Path<br>-- descriptor SMT Parameter, X'0008'. | | |

| ASN.1 Type Definition | | |
|---|---|---|
| **Type Name :** MACNeighbors_GENERAL<br>**Comments :** General parameter. | | |
| **Type Definition** | | |
| SEQUENCE {Parameter_Type | OCTETSTRING(SIZE(2)), | |
| Parameter_Length | OCTETSTRING(SIZE(2)), | |
| MIB_Index | OCTETSTRING(SIZE(2)), | |
| --value of fddiMACIndex-- | | |
| MAC_Index | OCTETSTRING(SIZE(2)), | |
| --as in the PathDescriptor SMT_Parameter X'0008'-- | | |
| UNA | OCTETSTRING(SIZE(6)), | |
| --fddiMACUpstreamNbr-- | | |
| DNA | OCTETSTRING(SIZE(6)), | |
| fddiMACDownstreamNbr-- | } | |



--`,,```,,,,````-`-`,,`,,`,`,,`---
Copyright International Organization for Standardization
Provided by IHS under license with ISO
No reproduction or networking permitted without license from IHS
Not for Resale

| ASN.1 Type Definition |
|---|
| **Type Name :** PathDescriptor_GENERAL<br>**Comments :** General parameter. |
| **Type Definition** |

```
SEQUENCE    {Parameter_Type              OCTETSTRING(SIZE(2)),
             Parameter_Length            OCTETSTRING(SIZE(2)),
                          --***Port Records***--
             MIB_Index                   OCTETSTRING(SIZE(2)),
               --value of fddiPORTIndex--
             PortType                    OCTETSTRING(SIZE(1)),
               --A='00'H; B='01'H; S='02'H; M='03'H--
             ConnectState                OCTETSTRING(SIZE(1)),
               --Disabled='00'H; Connecting='01'H; Stanby='02'H; Active='03'H--
             RemotePORTType              OCTETSTRING(SIZE(1)),
               --A='00'H; B='01'H; S='02'H; M='03'H; Unknown=''04'H--
             RemoteMAC                   OCTETSTRING(SIZE(1)),
               --Non present='00'H; Remote MAC indicated='01'H--
             ConResourceIndex            OCTETSTRING(SIZE(2)),       --X'0001'-X'FFFF'--
               --Index(connection) of Port or MAC on Path--
                          --***MAC Records***--
             MAC_Addr                    OCTETSTRING(SIZE(6)),
             ConResourceIndex            OCTETSTRING(SIZE(2))        --X'0001'-X'FFFF'--
               --Index(connection) of Port or MAC--  }
```

| ASN.1 Type Definition |
|---|
| **Type Name :** MACStatus_GENERAL<br>**Comments :** General parameter. |
| **Type Definition** |

```
SEQUENCE    {Parameter_Type       OCTETSTRING(SIZE(2)),
             Parameter_Length     OCTETSTRING(SIZE(2)),
             MIB_Index            OCTETSTRING(SIZE(2)),
               --value of fddiMACIndex--
             MAC_Index            OCTETSTRING(SIZE(2)),
               --as in PathDescriptor X'0008'--
             T_Req                OCTETSTRING(SIZE(4)),
             T_Neg                OCTETSTRING(SIZE(4)),
             T_Max                OCTETSTRING(SIZE(4)),
             TVXValue             OCTETSTRING(SIZE(4)),
             T_Min                OCTETSTRING(SIZE(4)),
              --these timers are TimerTwosComplement--
             SBA                  INTEGER(0..4294967295), --4 octets--
             Frame_Ct             INTEGER(0..4294967295),
             Error_Ct             INTEGER(0..4294967295),
             Lost_Ct              INTEGER(0..4294967295)       }
```



Copyright International Organization for Standardization
Provided by IHS under license with ISO
No reproduction or networking permitted without license from IHS
Not for Resale

| ASN.1 Type Definition |
|---|
| **Type Name :** PortLEMStatus_GENERAL<br>**Comments :** General parameter. |
| **Type Definition** |

```
SEQUENCE    {Parameter_Type        OCTETSTRING(SIZE(2)),
             Parameter_Length      OCTETSTRING(SIZE(2)),
             MIB_Index             OCTETSTRING(SIZE(2)),
               --value of fddiPORTIndex--
             PORT_Index            OCTETSTRING(SIZE(2)),      --X'0001'-X'FFFF'--
               --as in PathDescriptor X'0008'--
             PAD1                  OCTETSTRING(SIZE(1)),
             Ler_Cutoff            INTEGER(0..255), --1 octet--
             Ler_Alarm             INTEGER(0..255),
             Ler_Estimate          INTEGER(0..255),
             Lem_Reject_Ct         INTEGER(0..4294967295), --4 octets--
             Lem_Ct                INTEGER(0..4294967295)      }
```

| ASN.1 Type Definition |
|---|
| **Type Name :** MACFrameCounters_GENERAL<br>**Comments :** General parameter. |
| **Type Definition** |

```
SEQUENCE    {Parameter_Type        OCTETSTRING(SIZE(2)),
             Parameter_Length      OCTETSTRING(SIZE(2)),
             MIB_Index             OCTETSTRING(SIZE(2)),
               --value of fddiMACIndex--
             MAC-Index             OCTETSTRING(SIZE(2)),
               --as in PathDescriptor X'0008'--
             Copied_Ct             INTEGER(0..4294967295), --4 octets--
             Transmit_Ct           INTEGER(0..4294967295)      }
```

| ASN.1 Type Definition |
|---|
| **Type Name :** MACFrameNotCopiedCount_GENERAL<br>**Comments :** General parameter. This parameter is optional. |
| **Type Definition** |

```
SEQUENCE    {Parameter_Type        OCTETSTRING(SIZE(2)),
             Parameter_Length      OCTETSTRING(SIZE(2)),
             MIB_Index             OCTETSTRING(SIZE(2)),
               --value of fddiMACIndex--
             MAC_Index             OCTETSTRING(SIZE(2)),
               --as in PathDescriptor X'0008"--
             NotCopied_Ct          INTEGER(0..4294967295) --4 octets--    }
```

--`,,```,,,,````-`-`,,`,,`,`,,`---



Copyright International Organization for Standardization
Provided by IHS under license with ISO
No reproduction or networking permitted without license from IHS
Not for Resale

| ASN.1 Type Definition |
|---|
| **Type Name :** MACPriorityValues_GENERAL<br>**Comments :** General parameter. This parameter is optional. |
| **Type Definition** |

```
SEQUENCE    {Parameter_Type         OCTETSTRING(SIZE(2)),
             Parameter_Length       OCTETSTRING(SIZE(2)),
             MIB_Index              OCTETSTRING(SIZE(2)),
               --value of fddiMACIndex--
             MAC_Index              OCTETSTRING(SIZE(2)),
               --as in PathDescriptor X'0008'--
             T_Pri0                 OCTETSTRING(SIZE(4)),
             T_Pri1                 OCTETSTRING(SIZE(4)),
             T_Pri2                 OCTETSTRING(SIZE(4)),
             T_Pri3                 OCTETSTRING(SIZE(4)),
             T_Pri4                 OCTETSTRING(SIZE(4)),
             T_Pri5                 OCTETSTRING(SIZE(4)),
             T_Pri6                 OCTETSTRING(SIZE(4))
               --these timers are TimerTwosComplement--    }
```

| ASN.1 Type Definition |
|---|
| **Type Name :** PortEBStatus_GENERAL<br>**Comments :** General parameter. This parameter is optional. |
| **Type Definition** |

```
SEQUENCE    {Parameter_Type         OCTETSTRING(SIZE(2)),
             Parameter_Length       OCTETSTRING(SIZE(2)),
             MIB_Index              OCTETSTRING(SIZE(2)),
               --value of fddiPORTIndex--
             PORT_Index             OCTETSTRING(SIZE(2)),
               --as in PathDescriptor X'0008'--
             EbError_Ct             INTEGER(0..4294967295) --4 octets--    }
```

| ASN.1 Type Definition |
|---|
| **Type Name :** ManufacturerField_GENERAL<br>**Comments :** General parameter. This parameter is optional. |
| **Type Definition** |

```
SEQUENCE    {Parameter_Type         OCTETSTRING(SIZE(2)),
             Parameter_Length       OCTETSTRING(SIZE(2)),
             manuf_OUI              OCTETSTRING(SIZE(3)),
             manuf_data             OCTETSTRING(SIZE(29))       }
```



Copyright International Organization for Standardization
Provided by IHS under license with ISO
No reproduction or networking permitted without license from IHS
Not for Resale

| ASN.1 Type Definition | | |
|---|---|---|
| **Type Name :** UserField_GENERAL<br>**Comments :** General parameter. | | |
| **Type Definition** | | |
| SEQUENCE | {Parameter_Type<br>Parameter_Length<br>user_data | OCTETSTRING(SIZE(2)),<br>OCTETSTRING(SIZE(2)),<br>OCTETSTRING(SIZE(32), } |

| ASN.1 Type Definition | | |
|---|---|---|
| **Type Name :** ECHOData_GENERAL<br>**Comments :** General parameter. | | |
| **Type Definition** | | |
| SEQUENCE | {Parameter_Type<br>Parameter_Length<br>PAD<br>echo_data | OCTETSTRING(SIZE(2)),<br>OCTETSTRING(SIZE(2)),<br>OCTETSTRING(SIZE(..)) DEFAULT NULL,<br>ECH_DATA(length:INTEGER) } |

| ASN.1 Type Definition | | |
|---|---|---|
| **Type Name :** ReasonCode_GENERAL<br>**Comments :** General parameter. | | |
| **Type Definition** | | |
| SEQUENCE | {Parameter_Type<br>Parameter_Length<br>reason | OCTETSTRING(SIZE(2)),<br>OCTETSTRING(SIZE(2)),<br>OCTETSTRING(SIZE(4)) |
| | --FrameClassNotSupported = ‘00000001’H--<br>--FrameVersionNotSupported = ‘00000002’H--<br>--Success = ‘00000003’H--<br>--BadSetcount = ‘00000004’H--<br>--IllegalOperation = ‘00000005’H--<br>--NoParameter = ‘00000006’H--<br>--OutOfRange = ‘00000008’H--<br>--NotAuthorized = ‘00000009’H--<br>--LengthError = ‘0000000A’H--<br>--FrameTooLong = ‘0000000B’H--<br>--SBADenied = ‘0000000D’H-- } | |


Copyright International Organization for Standardization
Provided by IHS under license with ISO
No reproduction or networking permitted without license from IHS
Not for Resale

| ASN.1 Type Definition | | |
|---|---|---|
| **Type Name :** RejectedFrameBeginning_GENERAL<br>**Comments :** General parameter. | | |
| **Type Definition** | | |
| SEQUENCE {Parameter_Type<br>Parameter_Length<br>PAD3<br>RejectedFrameBeginning | OCTETSTRING(SIZE(2)),<br>OCTETSTRING(SIZE(2)),<br>OCTETSTRING(SIZE(3)),<br>OCTETSTRING(SIZE(..)) | } |

| ASN.1 Type Definition | | |
|---|---|---|
| **Type Name :** SMTSupportedVersions_GENERAL<br>**Comments :** General parameter. | | |
| **Type Definition** | | |
| SEQUENCE {Parameter_Type<br>Parameter_Length<br>PAD2<br>numVersions<br>indexOpVersion<br>Version_1<br>Version_2 | OCTETSTRING(SIZE(2)),<br>OCTETSTRING(SIZE(2)),<br>OCTETSTRING(SIZE(2)),<br>OCTETSTRING(SIZE(1)),<br>OCTETSTRING(SIZE(1)),<br>OCTETSTRING(SIZE(2)),<br>OCTETSTRING(SIZE(2)) | } |

| ASN.1 Type Definition | | |
|---|---|---|
| **Type Name :** ResourceType_GENERAL<br>**Comments :** General parameter. This parameter is optional. | | |
| **Type Definition** | | |
| SEQUENCE {Parameter_Type<br>Parameter_Length<br>ResourceType<br>--synchronous bandwidth-- | OCTETSTRING(SIZE(2)),<br>OCTETSTRING(SIZE(2)),<br>OCTETSTRING(SIZE(4)) | } |

| ASN.1 Type Definition | | |
|---|---|---|
| **Type Name :** SBACommand_GENERAL<br>**Comments :** General parameter. This parameter is optional. | | |
| **Type Definition** | | |
| SEQUENCE {Parameter_Type<br>Parameter_Length<br>SbaCommand<br>--RequestAllocation = ‘00000001’H--<br>--ReportAllocation = ‘00000002’H--<br>--ChangeAllocation = ‘00000003’H-- | OCTETSTRING(SIZE(2)),<br>OCTETSTRING(SIZE(2)),<br>OCTETSTRING(SIZE(4)) | } |



Copyright International Organization for Standardization
Provided by IHS under license with ISO
No reproduction or networking permitted without license from IHS
Not for Resale

| ASN.1 Type Definition | | |
|---|---|---|
| **Type Name :** SBAPayloadRequest_GENERAL<br>**Comments :** General parameter. This parameter is optional. | | |
| **Type Definition** | | |
| SEQUENCE | {Parameter_Type<br>Parameter_Length<br>SbaRequest | OCTETSTRING(SIZE(2)),<br>OCTETSTRING(SIZE(2)),<br>OCTETSTRING(SIZE(4)) } |

| ASN.1 Type Definition | | |
|---|---|---|
| **Type Name :** SBAOverheadRequest_GENERAL<br>**Comments :** General parameter. This parameter is optional. | | |
| **Type Definition** | | |
| SEQUENCE | {Parameter_Type<br>Parameter_Length<br>SbaOverheadReq | OCTETSTRING(SIZE(2)),<br>OCTETSTRING(SIZE(2)),<br>OCTETSTRING(SIZE(4)) } |

| ASN.1 Type Definition | | |
|---|---|---|
| **Type Name :** SBAAllocationAddress_GENERAL<br>**Comments :** General parameter. This parameter is optional. | | |
| **Type Definition** | | |
| SEQUENCE | {Parameter_Type<br>Parameter_Length<br>PAD2<br>SbaAllocationAddr | OCTETSTRING(SIZE(2)),<br>OCTETSTRING(SIZE(2)),<br>OCTETSTRING(SIZE(2)),<br>OCTETSTRING(SIZE(6)) } |

| ASN.1 Type Definition | | |
|---|---|---|
| **Type Name :** SBACategory_GENERAL<br>**Comments :** General parameter. This parameter is optional. | | |
| **Type Definition** | | |
| SEQUENCE | {Parameter_Type<br>Parameter_Length<br>Category | OCTETSTRING(SIZE(2)),<br>OCTETSTRING(SIZE(2)),<br>OCTETSTRING(SIZE(4)) } |

| ASN.1 Type Definition | | |
|---|---|---|
| **Type Name :** MaximumT_Neg_GENERAL<br>**Comments :** General parameter. This parameter is optional. | | |
| **Type Definition** | | |
| SEQUENCE | {Parameter_Type<br>Parameter_Length<br>MaxTneg | OCTETSTRING(SIZE(2)),<br>OCTETSTRING(SIZE(2)),<br>OCTETSTRING(SIZE(4)) } |

--`,,```,,,,````-`-`,,`,,`,`,,`---



Copyright International Organization for Standardization
Provided by IHS under license with ISO
No reproduction or networking permitted without license from IHS
Not for Resale

| ASN.1 Type Definition |
|---|
| **Type Name :** MinimumSBASegmentSize_GENERAL<br>**Comments :** General parameter. This parameter is optional. |
| **Type Definition** |
| SEQUENCE {Parameter_Type OCTETSTRING(SIZE(2)),<br>Parameter_Length OCTETSTRING(SIZE(2)),<br>MinSegment OCTETSTRING(SIZE(4)) DEFAULT '00000001'H } |

| ASN.1 Type Definition |
|---|
| **Type Name :** SBAAllocatable_GENERAL<br>**Comments :** General parameter. This parameter is optional. |
| **Type Definition** |
| SEQUENCE {Parameter_Type OCTETSTRING(SIZE(2)),<br>Parameter_Length OCTETSTRING(SIZE(2)),<br>SbaAllocatable OCTETSTRING(SIZE(4)) } |

| ASN.1 Type Definition |
|---|
| **Type Name :** Authorization_GENERAL<br>**Comments :** General parameter. This parameter is optional. |
| **Type Definition** |
| SEQUENCE {Parameter_Type OCTETSTRING(SIZE(2)),<br>Parameter_Length OCTETSTRING(SIZE(2)),<br>Authorization OCTETSTRING(SIZE(..)) } |

| ASN.1 Type Definition |
|---|
| **Type Name :** ESFID_GENERAL<br>**Comments :** General parameter. |
| **Type Definition** |
| SEQUENCE {Parameter_Type OCTETSTRING(SIZE(2)),<br>Parameter_Length OCTETSTRING(SIZE(2)),<br>PAD2 OCTETSTRING(SIZE(2)),<br>ESF_ID OCTETSTRING(SIZE(6)) } |



Copyright International Organization for Standardization
Provided by IHS under license with ISO
No reproduction or networking permitted without license from IHS
Not for Resale

### 10.2.3 ASN.1 Type Definitions for MIB Attributes

| ASN.1 Type Definition | | |
|---|---|---|
| **Type Name :** MIBGrp<br>**Comments :** MIB attribute groups. | | |
| **Type Definition** | | |
| CHOICE | {smtstationidgrp | SMTGrp, |
| | smtstationconfiggrp | SMTGrp, |
| | smtstatusgrp | SMTGrp, |
| | smtmiboperationgrp | SMTGrp, |
| | maccapabilitiesgrp | MACGrp, |
| | macconfiggrp | MACGrp, |
| | macaddressgrp | MACGrp, |
| | macoperationgrp | MACGrp, |
| | maccountersgrp | MACGrp, |
| | macframeerrorconditiongrp | MACGrp, |
| | macnotcopiedconditiongrp | MACGrp OPTIONAL, |
| | macstatusgrp | MACGrp, |
| | pathconfiggrp | PATHGrp, |
| | portconfiggrp | PORTGrp, |
| | portoperationgrp | PORTGrp, |
| | porterrorctrsgrp | PORTGrp, |
| | portlergrp | PORTGrp, |
| | portstatusgrp | PORTGrp |
| | } | |

#### 10.2.3.1 ASN.1 Type Definitions for SMT Attributes

| ASN.1 Type Definition | | |
|---|---|---|
| **Type Name :** SMTGrp<br>**Comments :** SMT attribute group. | | |
| **Type Definition** | | |
| SEQUENCE | {Parameter_Type | OCTETSTRING(SIZE(2)), |
| | Parameter_Length | OCTETSTRING(SIZE(2)), |
| | Parameter_Value | ANY --SMT attribute group-- } |



Copyright International Organization for Standardization
Provided by IHS under license with ISO
No reproduction or networking permitted without license from IHS
Not for Resale

#### 10.2.3.1.1 SMT Station ID Group Attributes

| ASN.1 Type Definition |
|---|
| **Type Name :** SMTStationIdGrp<br>**Comments :** SMT attribute group. |
| **Type Definition** |
| SET {stationid SMTStationId,<br>opversionid SMTOpVersionId,<br>hiversionid SMTHiVersionId,<br>loversionid SMTLoVersionId,<br>manufacturerdata SMTManufacturerData OPTIONAL,<br>userdata SMTUserData,<br>mibversionid SMTMIBVersionId } |

| ASN.1 Type Definition |
|---|
| **Type Name :** SMTStationId<br>**Comments :** SMT attribute. |
| **Type Definition** |
| SEQUENCE {Parameter_Type OCTETSTRING(SIZE(2)),<br>Parameter_Length OCTETSTRING(SIZE(2)),<br>ImplementerOctet OCTETSTRING(SIZE(2)),<br>Station_Address OCTETSTRING(SIZE(6)), } |

| ASN.1 Type Definition |
|---|
| **Type Name :** SMTOpVersionId<br>**Comments :** SMT attribute. |
| **Type Definition** |
| SEQUENCE {Parameter_Type OCTETSTRING(SIZE(2)),<br>Parameter_Length OCTETSTRING(SIZE(2)),<br>PAD2 OCTETSTRING(SIZE(2)),<br>OpVersionId INTEGER (0..65535) --2 octets-- } |

| ASN.1 Type Definition |
|---|
| **Type Name :** SMTHiVersionId<br>**Comments :** SMT attribute. |
| **Type Definition** |
| SEQUENCE {Parameter_Type OCTETSTRING(SIZE(2)),<br>Parameter_Length OCTETSTRING(SIZE(2)),<br>PAD2 OCTETSTRING(SIZE(2)),<br>HiVersionId INTEGER (0..65535) --2 octets-- } |



Copyright International Organization for Standardization
Provided by IHS under license with ISO
No reproduction or networking permitted without license from IHS
Not for Resale

| ASN.1 Type Definition | | |
|---|---|---|
| **Type Name :** SMTLoVersionId<br>**Comments :** SMT attribute. | | |
| **Type Definition** | | |
| SEQUENCE | {Parameter_Type | OCTETSTRING(SIZE(2)), |
| | Parameter_Length | OCTETSTRING(SIZE(2)), |
| | PAD2 | OCTETSTRING(SIZE(2)), |
| | LoVersionId | INTEGER(0..65535) --2 octets-- } |

| ASN.1 Type Definition | | |
|---|---|---|
| **Type Name :** SMTManufacturerData<br>**Comments :** SMT attribute. This attribute is optional. | | |
| **Type Definition** | | |
| SEQUENCE | {Parameter_Type | OCTETSTRING(SIZE(2)), |
| | Parameter_Length | OCTETSTRING(SIZE(2)), |
| | ManufacturerOUI | OCTETSTRING(SIZE(3)), |
| | ManufacturerData | OCTETSTRING(SIZE(29)) } |

| ASN.1 Type Definition | | |
|---|---|---|
| **Type Name :** SMTUserData<br>**Comments :** SMT attribute. | | |
| **Type Definition** | | |
| SEQUENCE | {Parameter_Type | OCTETSTRING(SIZE(2)), |
| | Parameter_Length | OCTETSTRING(SIZE(2)), |
| | UserData | OCTETSTRING(SIZE(32)) } |

| ASN.1 Type Definition | | |
|---|---|---|
| **Type Name :** SMTMIBVersionId<br>**Comments :** SMT attribute. | | |
| **Type Definition** | | |
| SEQUENCE | {Parameter_Type | OCTETSTRING(SIZE(2)), |
| | Parameter_Length | OCTETSTRING(SIZE(2)), |
| | PAD2 | OCTETSTRING(SIZE(2)), |
| | MIBVersionId | INTEGER(0..65535) --2 octets-- } |


Copyright International Organization for Standardization
Provided by IHS under license with ISO
No reproduction or networking permitted without license from IHS
Not for Resale

#### 10.2.3.1.2 SMT Station Configuration Group Attributes

| ASN.1 Type Definition |
|---|
| **Type Name :** SMTStationConfigGrp<br>**Comments :** SMT attribute group. |
| **Type Definition** |
| SET {macct SMTMac_Ct,<br>nonmasterct SMTNonMaster_Ct,<br>masterct SMTMaster_Ct,<br>availablepaths SMTAvailablePaths,<br>configcapabilities SMTConfigCapabilities,<br>configpolicy SMTConfigPolicy,<br>connectionpolicy SMTConnectionPolicy,<br>tnotify SMTT_Notify,<br>statrptpolicy SMTStatRptPolicy,<br>tracemaxexpiration SMTTrace_MaxExpiration,<br>portindexes SMTPORTIndexes,<br>macindexes SMTMACIndexes,<br>bypasspresent SMTBypassPresent } |

| ASN.1 Type Definition |
|---|
| **Type Name :** SMTMac_Ct<br>**Comments :** SMT attribute. |
| **Type Definition** |
| SEQUENCE {Parameter_Type OCTETSTRING(SIZE(2)),<br>Parameter_Length OCTETSTRING(SIZE(2)),<br>PAD3 OCTETSTRING(SIZE(3)),<br>MAC_Ct INTEGER(0..255) --1 octets-- } |

| ASN.1 Type Definition |
|---|
| **Type Name :** SMTNonMaster_Ct<br>**Comments :** SMT attribute. |
| **Type Definition** |
| SEQUENCE {Parameter_Type OCTETSTRING(SIZE(2)),<br>Parameter_Length OCTETSTRING(SIZE(2)),<br>PAD3 OCTETSTRING(SIZE(3)),<br>NonMaster_Ct INTEGER(0..255) --1 octet-- } |

| ASN.1 Type Definition |
|---|
| **Type Name :** SMTMaster_Ct<br>**Comments :** SMT attribute. |
| **Type Definition** |
| SEQUENCE {Parameter_Type OCTETSTRING(SIZE(2)),<br>Parameter_Length OCTETSTRING(SIZE(2)),<br>PAD3 OCTETSTRING(SIZE(3)),<br>Master_Ct INTEGER(0..255) --1 octet-- } |



Copyright International Organization for Standardization
Provided by IHS under license with ISO
No reproduction or networking permitted without license from IHS
Not for Resale

| ASN.1 Type Definition | | |
|---|---|---|
| **Type Name :** SMTAvailablePaths<br>**Comments :** SMT attribute. | | |
| **Type Definition** | | |
| SEQUENCE | {Parameter_Type | OCTETSTRING(SIZE(2)), |
| | Parameter_Length | OCTETSTRING(SIZE(2)), |
| | PAD3 | OCTETSTRING(SIZE(3)), |
| | AvailablePaths | AvailablePathsType --1 octet-- } |

| ASN.1 Type Definition | | |
|---|---|---|
| **Type Name :** SMTConfigCapabilities<br>**Comments :** SMT attribute. | | |
| **Type Definition** | | |
| SEQUENCE | {Parameter_Type | OCTETSTRING(SIZE(2)), |
| | Parameter_Length | OCTETSTRING(SIZE(2)), |
| | PAD2 | OCTETSTRING(SIZE(2)), |
| | ConfigCapabilities | Capabilities --2 octets-- } |

| ASN.1 Type Definition | | |
|---|---|---|
| **Type Name :** SMTConfigPolicy<br>**Comments :** SMT attribute. | | |
| **Type Definition** | | |
| SEQUENCE | {Parameter_Type | OCTETSTRING(SIZE(2)), |
| | Parameter_Length | OCTETSTRING(SIZE(2)), |
| | PAD2 | OCTETSTRING(SIZE(2)), |
| | ConfigPolicy | ConfigPolicyType --2 octets-- } |

| ASN.1 Type Definition | | |
|---|---|---|
| **Type Name :** SMTConnectionPolicy<br>**Comments :** SMT attribute. | | |
| **Type Definition** | | |
| SEQUENCE | {Parameter_Type | OCTETSTRING(SIZE(2)), |
| | Parameter_Length | OCTETSTRING(SIZE(2)), |
| | PAD2 | OCTETSTRING(SIZE(2)), |
| | ConnectionPolicy | Connection --2 octets--} |

--`,,```,,,,````-`-`,,`,,`,`,,`---



Copyright International Organization for Standardization
Provided by IHS under license with ISO
No reproduction or networking permitted without license from IHS
Not for Resale

| ASN.1 Type Definition | | |
|---|---|---|
| **Type Name :** SMTT_Notify<br>**Comments :** SMT attribute. | | |
| **Type Definition** | | |
| SEQUENCE | {Parameter_Type<br>Parameter_Length<br>PAD2<br>T_NotifyType | OCTETSTRING(SIZE(2)),<br>OCTETSTRING(SIZE(2)),<br>OCTETSTRING(SIZE(2)),<br>INTEGER(0..65535) --2 octets-- } |

| ASN.1 Type Definition | | |
|---|---|---|
| **Type Name :** SMTStatRptPolicy<br>**Comments :** SMT attribute. | | |
| **Type Definition** | | |
| SEQUENCE | {Parameter_Type<br>Parameter_Length<br>PAD3<br>StatRptPolicy | OCTETSTRING(SIZE(2)),<br>OCTETSTRING(SIZE(2)),<br>OCTETSTRING(SIZE(3)),<br>BOOLEAN DEFAULT TRUE } |

| ASN.1 Type Definition | | |
|---|---|---|
| **Type Name :** SMTTrace_MaxExpiration<br>**Comments :** SMT attribute. | | |
| **Type Definition** | | |
| SEQUENCE | {Parameter_Type<br>Parameter_Length<br>TraceMaxExpiration | OCTETSTRING(SIZE(2)),<br>OCTETSTRING(SIZE(2)),<br>INTEGER(0..4294967295) --4 octets-- } |

| ASN.1 Type Definition | | |
|---|---|---|
| **Type Name :** SMTPORTIndexes<br>**Comments :** SMT attribute. | | |
| **Type Definition** | | |
| SEQUENCE | {Parameter_Type<br>Parameter_Length<br>PORTIndexes | OCTETSTRING(SIZE(2)),<br>OCTETSTRING(SIZE(2)),<br>Indexes} |

| ASN.1 Type Definition | | |
|---|---|---|
| **Type Name :** SMTMACIndexes<br>**Comments :** SMT attribute. | | |
| **Type Definition** | | |
| SEQUENCE | {Parameter_Type<br>Parameter_Length<br>MACIndexes | OCTETSTRING(SIZE(2)),<br>OCTETSTRING(SIZE(2)),<br>Indexes} |



Copyright International Organization for Standardization
Provided by IHS under license with ISO
No reproduction or networking permitted without license from IHS
Not for Resale

| ASN.1 Type Definition | |
|---|---|
| **Type Name :** SMTBypassPresent<br>**Comments :** SMT attribute. | |
| **Type Definition** | |
| SEQUENCE {Parameter_Type<br>Parameter_Length<br>PAD3<br>BypassPresent | OCTETSTRING(SIZE(2)),<br>OCTETSTRING(SIZE(2)),<br>OCTETSTRING(SIZE(3)),<br>BOOLEAN } |

### 10.2.3.1.3 SMT Status Group Attributes

| ASN.1 Type Definition | |
|---|---|
| **Type Name :** SMTStatus_Group<br>**Comments :** SMT attribute group. | |
| **Type Definition** | |
| SET {ecmstate<br>cfstate<br>holdstate<br>remotedisconnectflag<br>stationstatus<br>peerwrapflag | SMTECMState,<br>SMTCF_State,<br>SMTHoldState OPTIONAL,<br>SMTRemoteDisconnectFlag,<br>SMTStationStatus,<br>SMTPeerWrapFlag } |

| ASN.1 Type Definition | |
|---|---|
| **Type Name :** SMTECMState<br>**Comments :** SMT attribute. | |
| **Type Definition** | |
| SEQUENCE {Parameter_Type<br>Parameter_Length<br>PAD2<br>ECMStateType | OCTETSTRING(SIZE(2)),<br>OCTETSTRING(SIZE(2)),<br>OCTETSTRING(SIZE(2)),<br>ECMState --2 octets-- } |

| ASN.1 Type Definition | |
|---|---|
| **Type Name :** SMTCF_State<br>**Comments :** SMT attribute. | |
| **Type Definition** | |
| SEQUENCE {Parameter_Type<br>Parameter_Length<br>PAD2<br>CF_StateType | OCTETSTRING(SIZE(2)),<br>OCTETSTRING(SIZE(2)),<br>OCTETSTRING(SIZE(2)),<br>CF_State --2 octets-- } |


Copyright International Organization for Standardization
Provided by IHS under license with ISO
No reproduction or networking permitted without license from IHS
Not for Resale

| ASN.1 Type Definition | | |
|---|---|---|
| **Type Name :** SMTHoldState<br>**Comments :** SMT attribute. This attribute is optional. | | |
| **Type Definition** | | |
| SEQUENCE | {Parameter_Type | OCTETSTRING(SIZE(2)), |
| | Parameter_Length | OCTETSTRING(SIZE(2)), |
| | PAD2 | OCTETSTRING(SIZE(2)), |
| | HoldStateType | HoldState --2 octets-- } |

| ASN.1 Type Definition | | |
|---|---|---|
| **Type Name :** SMTRemoteDisconnectFlag<br>**Comments :** SMT attribute. | | |
| **Type Definition** | | |
| SEQUENCE | {Parameter_Type | OCTETSTRING(SIZE(2)), |
| | Parameter_Length | OCTETSTRING(SIZE(2)), |
| | PAD3 | OCTETSTRING(SIZE(3)), |
| | RemoteDisconnectFlag | BOOLEAN } |

| ASN.1 Type Definition | | |
|---|---|---|
| **Type Name :** SMTStationStatus<br>**Comments :** SMT attribute. | | |
| **Type Definition** | | |
| SEQUENCE | {Parameter_Type | OCTETSTRING(SIZE(2)), |
| | Parameter_Length | OCTETSTRING(SIZE(2)), |
| | PAD2 | OCTETSTRING(SIZE(2)), |
| | StationStatus | Status --2 octets-- } |

| ASN.1 Type Definition | | |
|---|---|---|
| **Type Name :** SMTPeerWrapFlag<br>**Comments :** SMT attribute. | | |
| **Type Definition** | | |
| SEQUENCE | {Parameter_Type | OCTETSTRING(SIZE(2)), |
| | Parameter_Length | OCTETSTRING(SIZE(2)), |
| | PAD3 | OCTETSTRING(SIZE(3)), |
| | PeerWrapFlag | BOOLEAN } |



Copyright International Organization for Standardization
Provided by IHS under license with ISO
No reproduction or networking permitted without license from IHS
Not for Resale

#### 10.2.3.1.4 SMT MIB Operation Group Attributes

| ASN.1 Type Definition |
|---|
| **Type Name :** SMTMIBOperationGrp<br>**Comments :** SMT attribute group. |
| **Type Definition** |
| SET {timestamp SMTTimeStamp,<br>transitiontimestamp SMTTransitionTimeStamp,<br>setcount SMTSetCount OPTIONAL,<br>lastsetstationid SMTLastSetStationId OPTIONAL } |

| ASN.1 Type Definition |
|---|
| **Type Name :** SMTTimeStamp<br>**Comments :** SMT attribute. |
| **Type Definition** |
| SEQUENCE {Parameter_Type OCTETSTRING(SIZE(2)),<br>Parameter_Length OCTETSTRING(SIZE(2)),<br>TimeStamp INTEGER(0..18446744073709551615) --8 octets-- } |

| ASN.1 Type Definition |
|---|
| **Type Name :** SMTTransitionTimeStamp<br>**Comments :** SMT attribute. |
| **Type Definition** |
| SEQUENCE {Parameter_Type OCTETSTRING(SIZE(2)),<br>Parameter_Length OCTETSTRING(SIZE(2)),<br>TransitionTimeStamp INTEGER(0..18446744073709551615) --8 octets-- } |

| ASN.1 Type Definition |
|---|
| **Type Name :** SMTSetCount<br>**Comments :** SMT attribute. This attribute is optional. |
| **Type Definition** |
| SEQUENCE {Parameter_Type OCTETSTRING(SIZE(2)),<br>Parameter_Length OCTETSTRING(SIZE(2)),<br>Count INTEGER(0..4294967295), --4 octets--<br>SetTimeStamp INTEGER(0..18446744073709551615) --8 octets-- } |



Copyright International Organization for Standardization
Provided by IHS under license with ISO
No reproduction or networking permitted without license from IHS
Not for Resale

| ASN.1 Type Definition | | |
|---|---|---|
| **Type Name :** SMTLastSetStationId<br>**Comments :** SMT attribute. This attribute is optional. | | |
| **Type Definition** | | |
| SEQUENCE | {Parameter_Type | OCTETSTRING(SIZE(2)), |
| | Parameter_Length | OCTETSTRING(SIZE(2)), |
| | ImplementerOctet | OCTETSTRING(SIZE(2)), |
| | LastSetStation_Address | OCTETSTRING(SIZE(6)) } |

| ASN.1 Type Definition | | |
|---|---|---|
| **Type Name :** SMTVendorAttrib<br>**Comments :** SMT attribute. This attribute is optional. | | |
| **Type Definition** | | |
| SEQUENCE | {Parameter_Type | OCTETSTRING(SIZE(2)), |
| | Parameter_Length | OCTETSTRING(SIZE(2)), |
| | ManufacturerOUI | OCTETSTRING(SIZE(3)), |
| | VendorOctet | OCTETSTRING(SIZE(1)), |
| | VendorData | SpecificData } |

### 10.2.3.2 ASN.1 Type Definitions for MAC Attributes

| ASN.1 Type Definition | | |
|---|---|---|
| **Type Name :** MACGrp<br>**Comments :** MAC attribute group. | | |
| **Type Definition** | | |
| SEQUENCE | {Parameter_Type | OCTETSTRING(SIZE(2)), |
| | Parameter_Length | OCTETSTRING(SIZE(2)), |
| | Resource_Index | OCTETSTRING(SIZE(4)), |
| | Parameter_Value | ANY --MAC attribute group-- } |

#### 10.2.3.2.1 MAC Capabilities Group Attributes

| ASN.1 Type Definition | | |
|---|---|---|
| **Type Name :** MACCapabilitiesGrp<br>**Comments :** MAC attribute group. | | |
| **Type Definition** | | |
| SET | {framestatusfunctions | MACFrameStatusFunctions, |
| | bridgefunctions | MACBridgeFunctions OPTIONAL, |
| | tmaxcapability | MACT_MaxCapability, |
| | tvxcapability | MACTVXCapability } |



Copyright International Organization for Standardization
Provided by IHS under license with ISO
No reproduction or networking permitted without license from IHS
Not for Resale

| ASN.1 Type Definition |
|---|
| **Type Name :** MACFrameStatusFunctions<br>**Comments :** MAC attribute. |
| **Type Definition** |

```
SEQUENCE    {Parameter_Type          OCTETSTRING(SIZE(2)),
             Parameter_Length        OCTETSTRING(SIZE(2)),
             Resource_Index          OCTETSTRING(SIZE(4)),
             PAD2                    OCTETSTRING(SIZE(2)),
             FrameStatusFunctions    FS_Functions    --2 octets--      }
```

| ASN.1 Type Definition |
|---|
| **Type Name :** MACBridgeFunctions<br>**Comments :** MAC attribute. This attribute is optional. |
| **Type Definition** |

```
SEQUENCE    {Parameter_Type          OCTETSTRING(SIZE(2)),
             Parameter_Length        OCTETSTRING(SIZE(2)),
             Resource_Index          OCTETSTRING(SIZE(4)),
             PAD2                    OCTETSTRING(SIZE(2)) OPTIONAL,
             BridgeFunctions         BridgeType OPTIONAL    --2 octets--     }
```

| ASN.1 Type Definition |
|---|
| **Type Name :** MACT_MaxCapability<br>**Comments :** MAC attribute. |
| **Type Definition** |

```
SEQUENCE    {Parameter_Type          OCTETSTRING(SIZE(2)),
             Parameter_Length        OCTETSTRING(SIZE(2)),
             Resource_Index          OCTETSTRING(SIZE(4)),
             T_MaxCapability         OCTETSTRING(SIZE(4))    --TimerTwosComplement--
        }
```

| ASN.1 Type Definition |
|---|
| **Type Name :** MACTVXCapability<br>**Comments :** MAC attribute. |
| **Type Definition** |

```
SEQUENCE    {Parameter_Type      OCTETSTRING(SIZE(2)),
             Parameter_Length    OCTETSTRING(SIZE(2)),
             Resource_Index      OCTETSTRING(SIZE(4)),
             TVXCapability       OCTETSTRING(SIZE(4))    --TimerTwosComplement--  }
```



Copyright International Organization for Standardization
Provided by IHS under license with ISO
No reproduction or networking permitted without license from IHS
Not for Resale

#### 10.2.3.2.2 MAC Configuration Group Attributes

| ASN.1 Type Definition | | |
|---|---|---|
| **Type Name :** MACConfigGrp<br>**Comments :** MAC attribute group. | | |
| **Type Definition** | | |
| SET | {availablepaths | MACAvailablePaths, |
| | currentpath | MACCurrentPath, |
| | upstreamnbr | MACUpstreamNbr |
| | downstreamnbr | MACDownstreamNbr, |
| | oldupstreamnbr | MACOldUpstreamNbr, |
| | olddownstreamnbr | MACOldDownstreamNbr, |
| | dupaddresstest | MACDupAddressTest, |
| | requestedpaths | MACRequestedPaths, |
| | downstreamporttype | MACDownstreamPORTType, |
| | macindex | MACIndex } |

| ASN.1 Type Definition | | |
|---|---|---|
| **Type Name :** MACAvailablePaths<br>**Comments :** MAC attribute. | | |
| **Type Definition** | | |
| SEQUENCE | {Parameter_Type | OCTETSTRING(SIZE(2)), |
| | Parameter_Length | OCTETSTRING(SIZE(2)), |
| | Resource_Index | OCTETSTRING(SIZE(4)), |
| | PAD3 | OCTETSTRING(SIZE(3)), |
| | AvailablePaths | AvailablePathsType --1 octet-- } |

| ASN.1 Type Definition | | |
|---|---|---|
| **Type Name :** MACCurrentPath<br>**Comments :** MAC attribute. | | |
| **Type Definition** | | |
| SEQUENCE | {Parameter_Type | OCTETSTRING(SIZE(2)), |
| | Parameter_Length | OCTETSTRING(SIZE(2)), |
| | Resource_Index | OCTETSTRING(SIZE(4)), |
| | PAD2 | OCTETSTRING(SIZE(2)), |
| | CurrentPath | CurrentPathType --2 octets-- } |



Copyright International Organization for Standardization
Provided by IHS under license with ISO
No reproduction or networking permitted without license from IHS
Not for Resale

| ASN.1 Type Definition | | | |
|---|---|---|---|
| **Type Name :** MACUpstreamNbr<br>**Comments :** MAC attribute. | | | |
| **Type Definition** | | | |
| SEQUENCE | {Parameter_Type | OCTETSTRING(SIZE(2)), | |
| | Parameter_Length | OCTETSTRING(SIZE(2)), | |
| | Resource_Index | OCTETSTRING(SIZE(4)), | |
| | PAD2 | OCTETSTRING(SIZE(2)), | |
| | UpstreamNbr_Address | OCTETSTRING(SIZE(6)) | } |

| ASN.1 Type Definition | | | |
|---|---|---|---|
| **Type Name :** MACDownstreamNbr<br>**Comments :** MAC attribute. | | | |
| **Type Definition** | | | |
| SEQUENCE | {Parameter_Type | OCTETSTRING(SIZE(2)), | |
| | Parameter_Length | OCTETSTRING(SIZE(2)), | |
| | Resource_Index | OCTETSTRING(SIZE(4)), | |
| | PAD2 | OCTETSTRING(SIZE(2)), | |
| | DownstreamNbr_Address | OCTETSTRING(SIZE(6)) | } |

| ASN.1 Type Definition | | | |
|---|---|---|---|
| **Type Name :** MACOldUpstreamNbr<br>**Comments :** MAC attribute. | | | |
| **Type Definition** | | | |
| SEQUENCE | {Parameter_Type | OCTETSTRING(SIZE(2)), | |
| | Parameter_Length | OCTETSTRING(SIZE(2)), | |
| | Resource_Index | OCTETSTRING(SIZE(4)), | |
| | PAD2 | OCTETSTRING(SIZE(2)), | |
| | OldUpstreamNbr_Address | OCTETSTRING(SIZE(6)) | } |

| ASN.1 Type Definition | | | |
|---|---|---|---|
| **Type Name :** MACOldDownstreamNbr<br>**Comments :** MAC attribute. | | | |
| **Type Definition** | | | |
| SEQUENCE | {Parameter_Type | OCTETSTRING(SIZE(2)), | |
| | Parameter_Length | OCTETSTRING(SIZE(2)), | |
| | Resource_Index | OCTETSTRING(SIZE(4)), | |
| | PAD2 | OCTETSTRING(SIZE(2)), | |
| | OldDownstreamNbr_Address | OCTETSTRING(SIZE(6)) | } |


Copyright International Organization for Standardization
Provided by IHS under license with ISO
No reproduction or networking permitted without license from IHS
Not for Resale

| ASN.1 Type Definition | | |
|---|---|---|
| **Type Name :** MACDupAddressTest<br>**Comments :** MAC attribute. | | |
| **Type Definition** | | |
| SEQUENCE | {Parameter_Type | OCTETSTRING(SIZE(2)), |
| | Parameter_Length | OCTETSTRING(SIZE(2)), |
| | Resource_Index | OCTETSTRING(SIZE(4)), |
| | PAD2 | OCTETSTRING(SIZE(2)), |
| | DupAddressTestType | DupAddressTest --2 octets-- } |

| ASN.1 Type Definition | | |
|---|---|---|
| **Type Name :** MACRequestedPaths<br>**Comments :** MAC attribute. | | |
| **Type Definition** | | |
| SEQUENCE | {Parameter_Type | OCTETSTRING(SIZE(2)), |
| | Parameter_Length | OCTETSTRING(SIZE(2)), |
| | Resource_Index | OCTETSTRING(SIZE(4)), |
| | PAD3 | OCTETSTRING(SIZE(3)), |
| | RequestedPaths | PermittedPaths --1 octet-- } |

| ASN.1 Type Definition | | |
|---|---|---|
| **Type Name :** MACDownstreamPORTType<br>**Comments :** MAC attribute. | | |
| **Type Definition** | | |
| SEQUENCE | {Parameter_Type | OCTETSTRING(SIZE(2)), |
| | Parameter_Length | OCTETSTRING(SIZE(2)), |
| | Resource_Index | OCTETSTRING(SIZE(4)), |
| | PAD2 | OCTETSTRING(SIZE(2)), |
| | DownstreamPORTType | PortTypeType --2 octets-- } |

| ASN.1 Type Definition | | |
|---|---|---|
| **Type Name :** MACIndex<br>**Comments :** MAC attribute. | | |
| **Type Definition** | | |
| SEQUENCE | {Parameter_Type | OCTETSTRING(SIZE(2)), |
| | Parameter_Length | OCTETSTRING(SIZE(2)), |
| | Resource_Index | OCTETSTRING(SIZE(4)), |
| | PAD2 | OCTETSTRING(SIZE(2)), |
| | MACIndx | INTEGER(0..65535) --2 octets-- } |



Copyright International Organization for Standardization
Provided by IHS under license with ISO
No reproduction or networking permitted without license from IHS
Not for Resale

### 10.2.3.2.3 MAC Address Group Attributes

| ASN.1 Type Definition | | |
|---|---|---|
| **Type Name :** MACAddressGrp<br>**Comments :** MAC attribute group. | | |
| **Type Definition** | | |
| SET {smtaddress<br>longgrpaddress<br>shortgrpaddress | MACSMTAddress,<br>MACLongGrpAddress OPTIONAL,<br>MACShortGrpAddress OPTIONAL | } |

| ASN.1 Type Definition | | |
|---|---|---|
| **Type Name :** MACSMTAddress<br>**Comments :** MAC attribute. | | |
| **Type Definition** | | |
| SEQUENCE {Parameter_Type<br>Parameter_Length<br>Resource_Index<br>PAD2<br>SMTAddress | OCTETSTRING(SIZE(2)),<br>OCTETSTRING(SIZE(2)),<br>OCTETSTRING(SIZE(4)),<br>OCTETSTRING(SIZE(2)),<br>OCTETSTRING(SIZE(6)) | } |

| ASN.1 Type Definition | | |
|---|---|---|
| **Type Name :** MACLongGrpAddress<br>**Comments :** MAC attribute. This attribute is optional. | | |
| **Type Definition** | | |
| SEQUENCE {Parameter_Type<br>Parameter_Length<br>Resource_Index<br>LongGrpAddress | OCTETSTRING(SIZE(2)),<br>OCTETSTRING(SIZE(2)),<br>OCTETSTRING(SIZE(4)),<br>LongAddressSet | } |

| ASN.1 Type Definition | | |
|---|---|---|
| **Type Name :** MACShortGrpAddress<br>**Comments :** MAC attribute. This attribute is optional. | | |
| **Type Definition** | | |
| SEQUENCE {Parameter_Type<br>Parameter_Length<br>Resource_Index<br>ShortGrpAddress | OCTETSTRING(SIZE(2)),<br>OCTETSTRING(SIZE(2)),<br>OCTETSTRING(SIZE(4)),<br>ShortAddressSet | } |


Copyright International Organization for Standardization
Provided by IHS under license with ISO
No reproduction or networking permitted without license from IHS
Not for Resale

#### 10.2.3.2.4 MAC Operation Group Attributes

| ASN.1 Type Definition |
|---|
| **Type Name :** MACOperationGrp<br>**Comments :** MAC attribute group. |
| **Type Definition** |

```
SET     {treq           MACT_Req,
         tneg           MACT_Neg,
         tmax           MACT_Max,
         tvxvalue       MACTvxValue,
         tpri0          MACT_Pri OPTIONAL,
         tpri1          MACT_Pri OPTIONAL,
         tpri2          MACT_Pri OPTIONAL,
         tpri3          MACT_Pri OPTIONAL,
         tpri4          MACT_Pri OPTIONAL,
         tpri5          MACT_Pri OPTIONAL,
         tpri6          MACT_Pri OPTIONAL   }
```

| ASN.1 Type Definition |
|---|
| **Type Name :** MACT_Req<br>**Comments :** MAC attribute. |
| **Type Definition** |

```
SEQUENCE    {Parameter_Type     OCTETSTRING(SIZE(2)),
             Parameter_Length   OCTETSTRING(SIZE(2)),
             Resource_Index     OCTETSTRING(SIZE(4)),
             T_ReqType          OCTETSTRING(SIZE(4))    --TimerTwosComplement--   }
```

| ASN.1 Type Definition |
|---|
| **Type Name :** MACT_Neg<br>**Comments :** MAC attribute. |
| **Type Definition** |

```
SEQUENCE    {Parameter_Type     OCTETSTRING(SIZE(2)),
             Parameter_Length   OCTETSTRING(SIZE(2)),
             Resource_Index     OCTETSTRING(SIZE(4)),
             T_NegType          OCTETSTRING(SIZE(4))    --TimerTwosComplement--   }
```



Copyright International Organization for Standardization
Provided by IHS under license with ISO
No reproduction or networking permitted without license from IHS
Not for Resale

| ASN.1 Type Definition | | | |
|---|---|---|---|
| **Type Name :** MACT_Max<br>**Comments :** MAC attribute. | | | |
| **Type Definition** | | | |
| SEQUENCE | {Parameter_Type | OCTETSTRING(SIZE(2)), | |
| | Parameter_Length | OCTETSTRING(SIZE(2)), | |
| | Resource_Index | OCTETSTRING(SIZE(4)), | |
| | T_MaxType | OCTETSTRING(SIZE(4)) | --TimerTwosComplement-- } |

| ASN.1 Type Definition | | | |
|---|---|---|---|
| **Type Name :** MACTvxValue<br>**Comments :** MAC attribute. | | | |
| **Type Definition** | | | |
| SEQUENCE | {Parameter_Type | OCTETSTRING(SIZE(2)), | |
| | Parameter_Length | OCTETSTRING(SIZE(2)), | |
| | Resource_Index | OCTETSTRING(SIZE(4)), | |
| | TvxValueType | OCTETSTRING(SIZE(4)) | --TimerTwosComplement-- } |

| ASN.1 Type Definition | | | |
|---|---|---|---|
| **Type Name :** MACT_Pri<br>**Comments :** MAC attribute. This attribute is optional. | | | |
| **Type Definition** | | | |
| SEQUENCE | {Parameter_Type | OCTETSTRING(SIZE(2)), | |
| | Parameter_Length | OCTETSTRING(SIZE(2)), | |
| | Resource_Index | OCTETSTRING(SIZE(4)), | |
| | T_PriType | OCTETSTRING(SIZE(4)) | --TimerTwosComplement-- } |


Copyright International Organization for Standardization
Provided by IHS under license with ISO
No reproduction or networking permitted without license from IHS
Not for Resale

### 10.2.3.2.5 MAC Counters Group Attributes

| ASN.1 Type Definition |
|---|
| **Type Name :** MACCounters_Group<br>**Comments :** MAC attribute group. |
| **Type Definition** |
| SET {framect MACFrame_Ct,<br>copiedct MACCopied_Ct,<br>transmitct MACTransmit_Ct,<br>tokenct MACToken_Ct OPTIONAL,<br>errorct MACError_Ct,<br>lostct MACLost_Ct,<br>tvxexpiredct MACTvxExpired_Ct OPTIONAL,<br>notcopiedct MACNotCopied_Ct OPTIONAL,<br>latect MACLate_Ct OPTIONAL,<br>ringopct MACRingOp_Ct OPTIONAL } |

| ASN.1 Type Definition |
|---|
| **Type Name :** MACFrame_Ct<br>**Comments :** MAC attribute. |
| **Type Definition** |
| SEQUENCE {Parameter_Type OCTETSTRING(SIZE(2)),<br>Parameter_Length OCTETSTRING(SIZE(2)),<br>Resource_Index OCTETSTRING(SIZE(4)),<br>Frame_Ct INTEGER(0..4294967295) --4 octets-- } |

| ASN.1 Type Definition |
|---|
| **Type Name :** MACCopied_Ct<br>**Comments :** MAC attribute. |
| **Type Definition** |
| SEQUENCE {Parameter_Type OCTETSTRING(SIZE(2)),<br>Parameter_Length OCTETSTRING(SIZE(2)),<br>Resource_Index OCTETSTRING(SIZE(4)),<br>Copied_Ct INTEGER(0..4294967295) --4 octets-- } |

| ASN.1 Type Definition |
|---|
| **Type Name :** MACTransmit_Ct<br>**Comments :** MAC attribute. |
| **Type Definition** |
| SEQUENCE {Parameter_Type OCTETSTRING(SIZE(2)),<br>Parameter_Length OCTETSTRING(SIZE(2)),<br>Resource_Index OCTETSTRING(SIZE(4)),<br>Transmit_Ct INTEGER(0..4294967295) --4 octets-- } |



Copyright International Organization for Standardization
Provided by IHS under license with ISO
No reproduction or networking permitted without license from IHS
Not for Resale

| ASN.1 Type Definition |
|---|
| **Type Name :** MACToken_Ct<br>**Comments :** MAC attribute. This attribute is optional. |
| **Type Definition** |

```
SEQUENCE    {Parameter_Type      OCTETSTRING(SIZE(2)),
             Parameter_Length    OCTETSTRING(SIZE(2)),
             Resource_Index      OCTETSTRING(SIZE(4)),
             Token_Ct            INTEGER(0..4294967295)   --4 octets--  }
```

| ASN.1 Type Definition |
|---|
| **Type Name :** MACError_Ct<br>**Comments :** MAC attribute. |
| **Type Definition** |

```
SEQUENCE    {Parameter_Type      OCTETSTRING(SIZE(2)),
             Parameter_Length    OCTETSTRING(SIZE(2)),
             Resource_Index      OCTETSTRING(SIZE(4)),
             Error_Ct            INTEGER(0..4294967295)   --4 octets--  }
```

| ASN.1 Type Definition |
|---|
| **Type Name :** MACLost_Ct<br>**Comments :** MAC attribute. |
| **Type Definition** |

```
SEQUENCE    {Parameter_Type      OCTETSTRING(SIZE(2)),
             Parameter_Length    OCTETSTRING(SIZE(2)),
             Resource_Index      OCTETSTRING(SIZE(4)),
             Lost_Ct             INTEGER(0..4294967295)   --4 octets--  }
```

| ASN.1 Type Definition |
|---|
| **Type Name :** MACTvxExpired_Ct<br>**Comments :** MAC attribute. This attribute is optional. |
| **Type Definition** |

```
SEQUENCE    {Parameter_Type      OCTETSTRING(SIZE(2)),
             Parameter_Length    OCTETSTRING(SIZE(2)),
             Resource_Index      OCTETSTRING(SIZE(4)),
             TvxExpired_Ct       INTEGER(0..4294967295)   --4 octets--  }
```



Copyright International Organization for Standardization
Provided by IHS under license with ISO
No reproduction or networking permitted without license from IHS
Not for Resale

| ASN.1 Type Definition | | |
|---|---|---|
| **Type Name :** MACNotCopied_Ct<br>**Comments :** MAC attribute. This attribute is optional. | | |
| **Type Definition** | | |
| SEQUENCE | {Parameter_Type<br>Parameter_Length<br>Resource_Index<br>NotCopied_Ct | OCTETSTRING(SIZE(2)),<br>OCTETSTRING(SIZE(2)),<br>OCTETSTRING(SIZE(4)),<br>INTEGER(0..4294967295) --4 octets-- } |

| ASN.1 Type Definition | | |
|---|---|---|
| **Type Name :** MACLate_Ct<br>**Comments :** MAC attribute. This attribute is optional. | | |
| **Type Definition** | | |
| SEQUENCE | {Parameter_Type<br>Parameter_Length<br>Resource_Index<br>Late_Ct | OCTETSTRING(SIZE(2)),<br>OCTETSTRING(SIZE(2)),<br>OCTETSTRING(SIZE(4)),<br>INTEGER(0..4294967295) --4 octets-- } |

| ASN.1 Type Definition | | |
|---|---|---|
| **Type Name :** MACRingOp_Ct<br>**Comments :** MAC attribute. This attribute is optional. | | |
| **Type Definition** | | |
| SEQUENCE | {Parameter_Type<br>Parameter_Length<br>Resource_Index<br>RingOp_Ct | OCTETSTRING(SIZE(2)),<br>OCTETSTRING(SIZE(2)),<br>OCTETSTRING(SIZE(4)),<br>INTEGER(0..4294967295) --4 octets-- } |

#### 10.2.3.2.6 MAC Frame Error Condition Group Attributes

| ASN.1 Type Definition | | |
|---|---|---|
| **Type Name :** MACFrameErrorConditionGrp<br>**Comments :** MAC attribute group. | | |
| **Type Definition** | | |
| SET | {frameerrorthreshold<br>frameerrorratio | MACFrameErrorThreshold,<br>MACFrameErrorRatio } |



Copyright International Organization for Standardization
Provided by IHS under license with ISO
No reproduction or networking permitted without license from IHS
Not for Resale

| ASN.1 Type Definition | | |
|---|---|---|
| **Type Name :** MACFrameErrorThreshold<br>**Comments :** MAC attribute. | | |
| **Type Definition** | | |
| SEQUENCE | {Parameter_Type | OCTETSTRING(SIZE(2)), |
| | Parameter_Length | OCTETSTRING(SIZE(2)), |
| | Resource_Index | OCTETSTRING(SIZE(4)), |
| | PAD2 | OCTETSTRING(SIZE(2)), |
| | FrameErrorThreshold | INTEGER(0..65535) --2 octets-- } |

| ASN.1 Type Definition | | |
|---|---|---|
| **Type Name :** MACFrameErrorRatio<br>**Comments :** MAC attribute. | | |
| **Type Definition** | | |
| SEQUENCE | {Parameter_Type | OCTETSTRING(SIZE(2)), |
| | Parameter_Length | OCTETSTRING(SIZE(2)), |
| | Resource_Index | OCTETSTRING(SIZE(4)), |
| | PAD2 | OCTETSTRING(SIZE(2)), |
| | FrameErrorRatio | INTEGER(0..65535) --2 octets-- } |

### 10.2.3.2.7 MAC Not Copied Condition Group Attributes

| ASN.1 Type Definition | | |
|---|---|---|
| **Type Name :** MACNotCopiedConditionGrp<br>**Comments :** MAC attribute group. This group is optional. | | |
| **Type Definition** | | |
| SET | {macnotcopiedthreshold | MACNotCopiedThreshold OPTIONAL, |
| | macnotcopiedratio | MACNotCopiedRatio OPTIONAL } |

| ASN.1 Type Definition | | |
|---|---|---|
| **Type Name :** MACNotCopiedThreshold<br>**Comments :** MAC attribute. This attribute is optional. | | |
| **Type Definition** | | |
| SEQUENCE | {Parameter_Type | OCTETSTRING(SIZE(2)), |
| | Parameter_Length | OCTETSTRING(SIZE(2)), |
| | Resource_Index | OCTETSTRING(SIZE(4)), |
| | PAD2 | OCTETSTRING(SIZE(2)), |
| | NotCopiedThreshold | INTEGER(0..65535) --2 octets-- } |


Copyright International Organization for Standardization
Provided by IHS under license with ISO
No reproduction or networking permitted without license from IHS Not for Resale

| ASN.1 Type Definition | | |
|---|---|---|
| **Type Name :** MACNotCopiedRatio<br>**Comments :** MAC attribute. This attribute is optional. | | |
| **Type Definition** | | |
| SEQUENCE | {Parameter_Type | OCTETSTRING(SIZE(2)), |
| | Parameter_Length | OCTETSTRING(SIZE(2)), |
| | Resource_Index | OCTETSTRING(SIZE(4)), |
| | PAD | OCTETSTRING(SIZE(2)), |
| | NotCopiedRatio | INTEGER(0..65535) --2 octets-- } |

### 10.2.3.2.8 MAC Status Group Attributes

| ASN.1 Type Definition | | |
|---|---|---|
| **Type Name :** MACStatusGrp<br>**Comments :** MAC attribute group. | | |
| **Type Definition** | | |
| SET | {rmtstate | MACRMTState, |
| | daflag | MACDA_Flag, |
| | undaflag | MACUNDA_Flag, |
| | frameerrorflag | MACFrameErrorFlag, |
| | notcopiedflag | MACNotCopiedFlag OPTIONAL |
| | unitdataavailable | MACMA_UnitDataAvailable, |
| | hardwarepresent | MACHardwarePresent, |
| | maunitdataenable | MACMA_UnitdataEnable } |

| ASN.1 Type Definition | | |
|---|---|---|
| **Type Name :** MACRMTState<br>**Comments :** MAC attribute. | | |
| **Type Definition** | | |
| SEQUENCE | {Parameter_Type | OCTETSTRING(SIZE(2)), |
| | Parameter_Length | OCTETSTRING(SIZE(2)), |
| | Resource_Index | OCTETSTRING(SIZE(4)), |
| | PAD2 | OCTETSTRING(SIZE(2)), |
| | RMTStateType | RMTState --2 octets-- } |

--`,,```,,,,````-`-`,,`,,`,`,,`---



Copyright International Organization for Standardization
Provided by IHS under license with ISO
No reproduction or networking permitted without license from IHS
Not for Resale

| ASN.1 Type Definition | |
|---|---|
| **Type Name :** MACDA_Flag<br>**Comments :** MAC attribute. | |
| **Type Definition** | |
| SEQUENCE {Parameter_Type<br>Parameter_Length<br>Resource_Index<br>PAD3<br>DA_Flag | OCTETSTRING(SIZE(2)),<br>OCTETSTRING(SIZE(2)),<br>OCTETSTRING(SIZE(4)),<br>OCTETSTRING(SIZE(3)),<br>BOOLEAN } |

| ASN.1 Type Definition | |
|---|---|
| **Type Name :** MACUNDA_Flag<br>**Comments :** MAC attribute. | |
| **Type Definition** | |
| SEQUENCE {Parameter_Type<br>Parameter_Length<br>Resource_Index<br>PAD3<br>UNDA_Flag | OCTETSTRING(SIZE(2)),<br>OCTETSTRING(SIZE(2)),<br>OCTETSTRING(SIZE(4)),<br>OCTETSTRING(SIZE(3))<br>BOOLEAN } |

| ASN.1 Type Definition | |
|---|---|
| **Type Name :** MACFrameErrorFlag<br>**Comments :** MAC attribute. | |
| **Type Definition** | |
| SEQUENCE {Parameter_Type<br>Parameter_Length<br>Resource_Index<br>PAD3<br>FrameErrorFlag | OCTETSTRING(SIZE(2)),<br>OCTETSTRING(SIZE(2)),<br>OCTETSTRING(SIZE(4)),<br>OCTETSTRING(SIZE(3)),<br>BOOLEAN DEFAULT FALSE } |

| ASN.1 Type Definition | |
|---|---|
| **Type Name :** MACNotCopiedFlag<br>**Comments :** MAC attribute. This attribute is optional. | |
| **Type Definition** | |
| SEQUENCE {Parameter_Type<br>Parameter_Length<br>Resource_Index<br>PAD3<br>NotCopiedFlag | OCTETSTRING(SIZE(2)),<br>OCTETSTRING(SIZE(2)),<br>OCTETSTRING(SIZE(4)),<br>OCTETSTRING(SIZE(3)),<br>BOOLEAN DEFAULT FALSE } |



Copyright International Organization for Standardization
Provided by IHS under license with ISO
No reproduction or networking permitted without license from IHS
Not for Resale

| ASN.1 Type Definition | | |
|---|---|---|
| **Type Name :** MACMA_UnitdataAvailable<br>**Comments :** MAC attribute. | | |
| **Type Definition** | | |
| SEQUENCE | {Parameter_Type | OCTETSTRING(SIZE(2)), |
| | Parameter_Length | OCTETSTRING(SIZE(2)), |
| | Resource_Index | OCTETSTRING(SIZE(4)), |
| | PAD3 | OCTETSTRING(SIZE(3)), |
| | MA_UnitdataAvailable | BOOLEAN } |

| ASN.1 Type Definition | | |
|---|---|---|
| **Type Name :** MACHardwarePresent<br>**Comments :** MAC attribute. | | |
| **Type Definition** | | |
| SEQUENCE | {Parameter_Type | OCTETSTRING(SIZE(2)), |
| | Parameter_Length | OCTETSTRING(SIZE(2)), |
| | Resource_Index | OCTETSTRING(SIZE(4)), |
| | PAD2 | OCTETSTRING(SIZE(2)), |
| | HWPresent | Present --2 octets-- } |

| ASN.1 Type Definition | | |
|---|---|---|
| **Type Name :** MACMA_UnitdataEnable<br>**Comments :** MAC attribute. | | |
| **Type Definition** | | |
| SEQUENCE | {Parameter_Type | OCTETSTRING(SIZE(2)), |
| | Parameter_Length | OCTETSTRING(SIZE(2)), |
| | Resource_Index | OCTETSTRING(SIZE(4)), |
| | PAD3 | OCTETSTRING(SIZE(3)), |
| | MA_UnitdataEnable | BOOLEAN DEFAULT TRUE } |

| ASN.1 Type Definition | | |
|---|---|---|
| **Type Name :** MACVendorAttrib<br>**Comments :** MAC attribute. This attribute is optional. | | |
| **Type Definition** | | |
| SEQUENCE | {Parameter_Type | OCTETSTRING(SIZE(2)), |
| | Parameter_Length | OCTETSTRING(SIZE(2)), |
| | ManufacturerOUI | OCTETSTRING(SIZE(3)), |
| | VendorOctet | OCTETSTRING(SIZE(1)), |
| | VendorData | SpecificData } |



--`,,```,,,,````-`-`,,`,,`,`,,`---
Copyright International Organization for Standardization
Provided by IHS under license with ISO
No reproduction or networking permitted without license from IHS
Not for Resale

### 10.2.3.3 ASN.1 Type Definitions for PATH Attributes

| ASN.1 Type Definition |
|---|
| **Type Name :** PATHGrp<br>**Comments :** PATH attribute group. |
| **Type Definition** |
| SEQUENCE {Parameter_Type OCTETSTRING(SIZE(2)),<br>Parameter_Length OCTETSTRING(SIZE(2)),<br>Resource_Index OCTETSTRING(SIZE(4)),<br>Parameter_Value ANY --PATH attribute group-- |

| ASN.1 Type Definition |
|---|
| **Type Name :** PATHConfigGrp<br>**Comments :** PATH attribute group. |
| **Type Definition** |
| SET {index PATHIndex,<br>ringlatency PATHRingLatency OPTIONAL,<br>tracestatus PATHTraceStatus OPTIONAL,<br>sbapayload PATHSbaPayload OPTIONAL,<br>sbaoverhead PATHSbaOverhead OPTIONAL,<br>configuration PATHConfiguration,<br>trmode PATHT_Rmode OPTIONAL,<br>sbaavailable PATHSbaAvailable OPTIONAL,<br>tvxlowerbound PATHTVXLowerBound,<br>tmaxlowerbound PATHT_MaxLowerBound,<br>maxtreq PATHMaxT_Req } |

| ASN.1 Type Definition |
|---|
| **Type Name :** PATHIndex<br>**Comments :** PATH attribute. |
| **Type Definition** |
| SEQUENCE {Parameter_Type OCTETSTRING(SIZE(2)),<br>Parameter_Length OCTETSTRING(SIZE(2)),<br>Resource_Index OCTETSTRING(SIZE(4)),<br>PAD2 OCTETSTRING(SIZE(2)),<br>Index INTEGER(0..65535) --2 octets--<br>--Primary(1); Secondary(2); Local(3..255)-- } |



Copyright International Organization for Standardization
Provided by IHS under license with ISO
No reproduction or networking permitted without license from IHS
Not for Resale

| ASN.1 Type Definition |
|---|
| **Type Name :** PATHRingLatency<br>**Comments :** PATH attribute. This attribute is optional. |
| **Type Definition** |

```
SEQUENCE    {Parameter_Type      OCTETSTRING(SIZE(2)),
             Parameter_Length    OCTETSTRING(SIZE(2)),
             Resource_Index      OCTETSTRING(SIZE(4)),
             RingLatency         INTEGER(0..4294967295)   --4 octets-- }
```

| ASN.1 Type Definition |
|---|
| **Type Name :** PATHTraceStatus<br>**Comments :** PATH attribute. This attribute is optional. |
| **Type Definition** |

```
SEQUENCE    {Parameter_Type          OCTETSTRING(SIZE(2)),
             Parameter_Length        OCTETSTRING(SIZE(2)),
             Resource_Index          OCTETSTRING(SIZE(4)),
             PAD2                    OCTETSTRING(SIZE(2)),
             TraceStatusType         TraceStatus   --2 octets--        }
```

| ASN.1 Type Definition |
|---|
| **Type Name :** PATHSbaPayload<br>**Comments :** PATH attribute. This attribute is optional. |
| **Type Definition** |

```
SEQUENCE    {Parameter_Type      OCTETSTRING(SIZE(2)),
             Parameter_Length    OCTETSTRING(SIZE(2)),
             Resource_Index      OCTETSTRING(SIZE(4)),
             SbaPayload          INTEGER(0..4294967295)   --4 octets--  }
```

| ASN.1 Type Definition |
|---|
| **Type Name :** PATHSbaOverhead<br>**Comments :** PATH attribute. This attribute is optional. |
| **Type Definition** |

```
SEQUENCE    {Parameter_Type      OCTETSTRING(SIZE(2)),
             Parameter_Length    OCTETSTRING(SIZE(2)),
             Resource_Index      OCTETSTRING(SIZE(4)),
             SbaOverhead         INTEGER(0..4294967295)   --4 octets--  }
```



Copyright International Organization for Standardization
Provided by IHS under license with ISO
No reproduction or networking permitted without license from IHS
Not for Resale

| ASN.1 Type Definition | | |
|---|---|---|
| **Type Name :** PATHConfiguration<br>**Comments :** PATH attribute. | | |
| **Type Definition** | | |
| SEQUENCE | {Parameter_Type | OCTETSTRING(SIZE(2)), |
| | Parameter_Length | OCTETSTRING(SIZE(2)), |
| | Resource_Index | OCTETSTRING(SIZE(4)), |
| | Configuration | PathConfig } |

| ASN.1 Type Definition | | |
|---|---|---|
| **Type Name :** PATHT_Rmode<br>**Comments :** PATH attribute. This attribute is optional. | | |
| **Type Definition** | | |
| SEQUENCE | {Parameter_Type | OCTETSTRING(SIZE(2)), |
| | Parameter_Length | OCTETSTRING(SIZE(2)), |
| | Resource_Index | OCTETSTRING(SIZE(4)), |
| | T_RmodeType | INTEGER(0..4294967295) --4 octets-- } |

| ASN.1 Type Definition | | |
|---|---|---|
| **Type Name :** PATHSbaAvailable<br>**Comments :** PATH attribute. This attribute is optional. | | |
| **Type Definition** | | |
| SEQUENCE | {Parameter_Type | OCTETSTRING(SIZE(2)), |
| | Parameter_Length | OCTETSTRING(SIZE(2)), |
| | Resource_Index | OCTETSTRING(SIZE(4)), |
| | SbaAvailable | INTEGER(0..4294967295) --4 octets-- } |

| ASN.1 Type Definition | | |
|---|---|---|
| **Type Name :** PATHTVXLowerBound<br>**Comments :** PATH attribute. | | |
| **Type Definition** | | |
| SEQUENCE | {Parameter_Type | OCTETSTRING(SIZE(2)), |
| | Parameter_Length | OCTETSTRING(SIZE(2)), |
| | Resource_Index | OCTETSTRING(SIZE(4)), |
| | TVXLowerBound | OCTETSTRING(SIZE(4)) --TimerTwosComplement-- |
| } | | |



Copyright International Organization for Standardization
Provided by IHS under license with ISO
No reproduction or networking permitted without license from IHS
Not for Resale

| ASN.1 Type Definition |
|---|
| **Type Name :** PATHTT_MaxLowerBound<br>**Comments :** PATH attribute. |
| **Type Definition** |

```
SEQUENCE    {Parameter_Type          OCTETSTRING(SIZE(2)),
             Parameter_Length        OCTETSTRING(SIZE(2)),
             Resource_Index          OCTETSTRING(SIZE(4)),
             T_MaxLowerBound         OCTETSTRING(SIZE(4))    --TimerTwosComplement--
    }
```

| ASN.1 Type Definition |
|---|
| **Type Name :** PATHMaxT_Req<br>**Comments :** PATH attribute. |
| **Type Definition** |

```
SEQUENCE    {Parameter_Type      OCTETSTRING(SIZE(2)),
             Parameter_Length    OCTETSTRING(SIZE(2)),
             Resource_Index      OCTETSTRING(SIZE(4)),
             MaxT_Req            OCTETSTRING(SIZE(4))    --TimerTwosComplement--  }
```

| ASN.1 Type Definition |
|---|
| **Type Name :** PATHVendorAttrib<br>**Comments :** PATH attribute. This attribute is optional. |
| **Type Definition** |

```
SEQUENCE    {Parameter_Type      OCTETSTRING(SIZE(2)),
             Parameter_Length    OCTETSTRING(SIZE(2)),
             ManufacturerOUI     OCTETSTRING(SIZE(3)),
             VendorOctet         OCTETSTRING(SIZE(1)),
             VendorData          SpecificData     }
```

### 10.2.3.4 ASN.1 Type Definitions for PORT Attributes

| ASN.1 Type Definition |
|---|
| **Type Name :** PORTGrp<br>**Comments :** PORT attribute group. |
| **Type Definition** |

```
SEQUENCE    { Parameter_Type          OCTETSTRING(SIZE(2)),
              Parameter_Length        OCTETSTRING(SIZE(2)),
              Resource_Index          OCTETSTRING(SIZE(4)),
              Parameter_Value         ANY    --PORT attribute group--}
```



Copyright International Organization for Standardization
Provided by IHS under license with ISO
No reproduction or networking permitted without license from IHS
Not for Resale

#### 10.2.3.4.1 PORT Configuration Group Attributes

| ASN.1 Type Definition |
|---|
| **Type Name :** PORTConfigGrp<br>**Comments :** PORT attribute group. |
| **Type Definition** |
| SET {mytype PORTMyType,<br>neighbortype PORTNeighborType,<br>connectionpolicies PORTConnectionPolicies,<br>macindicated PORTMACIndicated,<br>currentpath PORTCurrentPath,<br>requestedpath PORTRequestedPaths,<br>macplacement PORTMACPlacement,<br>availablepath PORTAvailablePaths,<br>macllooptime PORTMACLoop_Time OPTIONAL,<br>pmdclass PORTPMDClass,<br>connectioncapabilities PORTConnectionCapabilities,<br>index PORTIndex } |

| ASN.1 Type Definition |
|---|
| **Type Name :** PORTMyType<br>**Comments :** PORT attribute. |
| **Type Definition** |
| SEQUENCE {Parameter_Type OCTETSTRING(SIZE(2)),<br>Parameter_Length OCTETSTRING(SIZE(2)),<br>Resource_Index OCTETSTRING(SIZE(4)),<br>PAD2 OCTETSTRING(SIZE(2)),<br>MyType PortTypeType --2 octets-- } |

| ASN.1 Type Definition |
|---|
| **Type Name :** PORTNeighborType<br>**Comments :** PORT attribute. |
| **Type Definition** |
| SEQUENCE {Parameter_Type OCTETSTRING(SIZE(2)),<br>Parameter_Length OCTETSTRING(SIZE(2)),<br>Resource_Index OCTETSTRING(SIZE(4)),<br>PAD2 OCTETSTRING(SIZE(2)),<br>NeighborType PortTypeType --2 octets-- } |


--`,,```,,,,````-`-`,,`,,`,`,,`---
Copyright International Organization for Standardization
Provided by IHS under license with ISO
No reproduction or networking permitted without license from IHS
Not for Resale

| ASN.1 Type Definition | | |
|---|---|---|
| **Type Name :** PORTConnectionPolicies<br>**Comments :** PORT attribute. | | |
| **Type Definition** | | |
| SEQUENCE | {Parameter_Type | OCTETSTRING(SIZE(2)), |
| | Parameter_Length | OCTETSTRING(SIZE(2)), |
| | Resource_Index | OCTETSTRING(SIZE(4)), |
| | PAD3 | OCTETSTRING(SIZE(3)), |
| | ConnectionPoliciesType | ConnectionPolicies --1 octet-- } |

| ASN.1 Type Definition | | |
|---|---|---|
| **Type Name :** PORTMACIndicated<br>**Comments :** PORT attribute. | | |
| **Type Definition** | | |
| SEQUENCE | {Parameter_Type | OCTETSTRING(SIZE(2)), |
| | Parameter_Length | OCTETSTRING(SIZE(2)), |
| | Resource_Index | OCTETSTRING(SIZE(4)), |
| | PAD2 | OCTETSTRING(SIZE(2)) |
| | T_Val9 | BOOLEAN, |
| | R_Val9 | BOOLEAN } |

| ASN.1 Type Definition | | |
|---|---|---|
| **Type Name :** PORTCurrentPath<br>**Comments :** PORT attribute. | | |
| **Type Definition** | | |
| SEQUENCE | {Parameter_Type | OCTETSTRING(SIZE(2)), |
| | Parameter_Length | OCTETSTRING(SIZE(2)), |
| | Resource_Index | OCTETSTRING(SIZE(4)), |
| | PAD2 | OCTETSTRING(SIZE(2)), |
| | CurrentPath | CurrentPathType --2 octets-- } |

| ASN.1 Type Definition | | |
|---|---|---|
| **Type Name :** PORTRequestedPaths<br>**Comments :** PORT attribute. | | |
| **Type Definition** | | |
| SEQUENCE | {Parameter_Type | OCTETSTRING(SIZE(2)), |
| | Parameter_Length | OCTETSTRING(SIZE(2)), |
| | Resource_Index | OCTETSTRING(SIZE(4)), |
| | RequestedPaths | RequestedPathsType --4 octets-- } |



Copyright International Organization for Standardization
Provided by IHS under license with ISO
No reproduction or networking permitted without license from IHS
Not for Resale

| ASN.1 Type Definition | | |
|---|---|---|
| **Type Name :** PORTMACPlacement<br>**Comments :** PORT attribute. | | |
| **Type Definition** | | |
| SEQUENCE | {Parameter_Type | OCTETSTRING(SIZE(2)), |
| | Parameter_Length | OCTETSTRING(SIZE(2)), |
| | Resource_Index | OCTETSTRING(SIZE(4)), |
| | PAD2 | OCTETSTRING(SIZE(2)), |
| | MACPlacement | INTEGER(0..65535) --2 octets-- } |

| ASN.1 Type Definition | | |
|---|---|---|
| **Type Name :** PORTAvailablePaths<br>**Comments :** PORT attribute. | | |
| **Type Definition** | | |
| SEQUENCE | {Parameter_Type | OCTETSTRING(SIZE(2)), |
| | Parameter_Length | OCTETSTRING(SIZE(2)), |
| | Resource_Index | OCTETSTRING(SIZE(4)), |
| | PAD3 | OCTETSTRING(SIZE(3)), |
| | AvailablePaths | AvailablePathsType --1 octet-- } |

| ASN.1 Type Definition | | |
|---|---|---|
| **Type Name :** PORTMACLoop_Time<br>**Comments :** PORT attribute. This attribute is optional. | | |
| **Type Definition** | | |
| SEQUENCE | {Parameter_Type | OCTETSTRING(SIZE(2)), |
| | Parameter_Length | OCTETSTRING(SIZE(2)), |
| | Resource_Index | OCTETSTRING(SIZE(4)), |
| | MACLoopTime | INTEGER(0..4294967295) --4 octets-- } |

| ASN.1 Type Definition | | |
|---|---|---|
| **Type Name :** PORTPMDClass<br>**Comments :** PORT attribute. | | |
| **Type Definition** | | |
| SEQUENCE | {Parameter_Type | OCTETSTRING(SIZE(2)), |
| | Parameter_Length | OCTETSTRING(SIZE(2)), |
| | Resource_Index | OCTETSTRING(SIZE(4)), |
| | PAD2 | OCTETSTRING(SIZE(2)), |
| | PMDClassType | PMDClass --2 octets-- } |



Copyright International Organization for Standardization
Provided by IHS under license with ISO
No reproduction or networking permitted without license from IHS
Not for Resale

| ASN.1 Type Definition | | |
|---|---|---|
| **Type Name :** PORTConnectionCapabilities<br>**Comments :** PORT attribute. | | |
| **Type Definition** | | |
| SEQUENCE | {Parameter_Type | OCTETSTRING(SIZE(2)), |
| | Parameter_Length | OCTETSTRING(SIZE(2)), |
| | Resource_Index | OCTETSTRING(SIZE(4)), |
| | PAD3 | OCTETSTRING(SIZE(3)), |
| | ConnectionCapabilities | ConnectionPolicies --1 octet-- } |

| ASN.1 Type Definition | | |
|---|---|---|
| **Type Name :** PORTIndex<br>**Comments :** PORT attribute. | | |
| **Type Definition** | | |
| SEQUENCE | {Parameter_Type | OCTETSTRING(SIZE(2)), |
| | Parameter_Length | OCTETSTRING(SIZE(2)), |
| | Resource_Index | OCTETSTRING(SIZE(4)), |
| | PAD2 | OCTETSTRING(SIZE(2)), |
| | PortIndx | INTEGER(0..65535) --2 octets-- } |

### 10.2.3.4.2 PORT Operation Group Attributes

| ASN.1 Type Definition | | |
|---|---|---|
| **Type Name :** PORTOperationGrp<br>**Comments :** PORT attribute group. | | |
| **Type Definition** | | |
| SET | {maintls | PORTMaint_LS OPTIONAL, |
| | bsflag | PORTBS_Flag, |
| | pcls | PORTPC_LS OPTIONAL } |

| ASN.1 Type Definition | | |
|---|---|---|
| **Type Name :** PORTMaint_LS<br>**Comments :** PORT attribute. This attribute is optional. | | |
| **Type Definition** | | |
| SEQUENCE | {Parameter_Type | OCTETSTRING(SIZE(2)), |
| | Parameter_Length | OCTETSTRING(SIZE(2)), |
| | Resource_Index | OCTETSTRING(SIZE(4)), |
| | PAD2 | OCTETSTRING(SIZE(2)), |
| | Maint_LS | LineState --2 octets-- } |



Copyright International Organization for Standardization
Provided by IHS under license with ISO
No reproduction or networking permitted without license from IHS
Not for Resale

| ASN.1 Type Definition | | |
|---|---|---|
| **Type Name :** PORTBS_Flag<br>**Comments :** PORT attribute. | | |
| **Type Definition** | | |
| SEQUENCE | {Parameter_Type<br>Parameter_Length<br>Resource_Index<br>PAD3<br>BS_Flag | OCTETSTRING(SIZE(2)),<br>OCTETSTRING(SIZE(2)),<br>OCTETSTRING(SIZE(4)),<br>OCTETSTRING(SIZE(3)),<br>BOOLEAN } |

| ASN.1 Type Definition | | |
|---|---|---|
| **Type Name :** PORTPC_LS<br>**Comments :** PORT attribute. This attribute is optional. | | |
| **Type Definition** | | |
| SEQUENCE | {Parameter_Type<br>Parameter_Length<br>Resource_Index<br>PAD2<br>PC_LS | OCTETSTRING(SIZE(2)),<br>OCTETSTRING(SIZE(2)),<br>OCTETSTRING(SIZE(4)),<br>OCTETSTRING(SIZE(2)),<br>LineState --2 octets-- } |

### 10.2.3.4.3 PORT Error Counters Group Attributes

| ASN.1 Type Definition | | |
|---|---|---|
| **Type Name :** PORTErrorCtrsGrp<br>**Comments :** PORT attribute group. | | |
| **Type Definition** | | |
| SET | {eberrorct<br>lctfailct | PORTEBError_Ct OPTIONAL,<br>PORTLCTFail_Ct } |

| ASN.1 Type Definition | | |
|---|---|---|
| **Type Name :** PORTEBError_Ct<br>**Comments :** PORT attribute. This attribute is optional. | | |
| **Type Definition** | | |
| SEQUENCE | {Parameter_Type<br>Parameter_Length<br>Resource_Index<br>EBError_Ct | OCTETSTRING(SIZE(2)),<br>OCTETSTRING(SIZE(2)),<br>OCTETSTRING(SIZE(4)),<br>INTEGER(0..4294967295) --4 octets-- } |


Copyright International Organization for Standardization
Provided by IHS under license with ISO
No reproduction or networking permitted without license from IHS
Not for Resale

| ASN.1 Type Definition | | |
|---|---|---|
| **Type Name :** PORTLCTFail_Ct<br>**Comments :** PORT attribute. | | |
| **Type Definition** | | |
| SEQUENCE {Parameter_Type<br>Parameter_Length<br>Resource_Index<br>LCTFail_Ct | OCTETSTRING(SIZE(2)),<br>OCTETSTRING(SIZE(2)),<br>OCTETSTRING(SIZE(4)),<br>INTEGER(0..4294967295) --4 octets-- } | |

### 10.2.3.4.4 PORT LER Group Attributes

| ASN.1 Type Definition | | |
|---|---|---|
| **Type Name :** PORTLerGrp<br>**Comments :** PORT attribute group. | | |
| **Type Definition** | | |
| SET {lerestimate<br>lemrejectct<br>lemct<br>lercutoff<br>leralarm | PORTLer_Estimate,<br>PORTLem_Reject_Ct,<br>PORTLem_Ct,<br>PORTLer_Cutoff,<br>PORTLer_Alarm } | |

| ASN.1 Type Definition | | |
|---|---|---|
| **Type Name :** PORTLer_Estimate<br>**Comments :** PORT attribute. | | |
| **Type Definition** | | |
| SEQUENCE {Parameter_Type<br>Parameter_Length<br>Resource_Index<br>PAD3<br>Ler_Estimate | OCTETSTRING(SIZE(2)),<br>OCTETSTRING(SIZE(2)),<br>OCTETSTRING(SIZE(4)),<br>OCTETSTRING(SIZE(3)),<br>INTEGER(0..255) --1 octet-- } | |

| ASN.1 Type Definition | | |
|---|---|---|
| **Type Name :** PORTLem_Reject_Ct<br>**Comments :** PORT attribute. | | |
| **Type Definition** | | |
| SEQUENCE {Parameter_Type<br>Parameter_Length<br>Resource_Index<br>Lem_Reject_Ct | OCTETSTRING(SIZE(2)),<br>OCTETSTRING(SIZE(2)),<br>OCTETSTRING(SIZE(4)),<br>INTEGER(0..4294967295) --4 octets-- } | |



Copyright International Organization for Standardization
Provided by IHS under license with ISO
No reproduction or networking permitted without license from IHS
Not for Resale

| ASN.1 Type Definition | | |
|---|---|---|
| **Type Name :** PORTLem_Ct<br>**Comments :** PORT attribute. | | |
| **Type Definition** | | |
| SEQUENCE | {Parameter_Type | OCTETSTRING(SIZE(2)), |
| | Parameter_Length | OCTETSTRING(SIZE(2)), |
| | Resource_Index | OCTETSTRING(SIZE(4)), |
| | Lem_Ct | INTEGER(0..4294967295) --4 octets-- } |

| ASN.1 Type Definition | | |
|---|---|---|
| **Type Name :** PORTLer_Cutoff<br>**Comments :** PORT attribute. | | |
| **Type Definition** | | |
| SEQUENCE | {Parameter_Type | OCTETSTRING(SIZE(2)), |
| | Parameter_Length | OCTETSTRING(SIZE(2)), |
| | Resource_Index | OCTETSTRING(SIZE(4)), |
| | PAD3 | OCTETSTRING(SIZE(3)), |
| | Ler_Cutoff | INTEGER(0..255) --1 octet-- } |

| ASN.1 Type Definition | | |
|---|---|---|
| **Type Name :** PORTLer_Alarm<br>**Comments :** PORT attribute. | | |
| **Type Definition** | | |
| SEQUENCE | {Parameter_Type | OCTETSTRING(SIZE(2)), |
| | Parameter_Length | OCTETSTRING(SIZE(2)), |
| | Resource_Index | OCTETSTRING(SIZE(4)), |
| | PAD3 | OCTETSTRING(SIZE(3)), |
| | Ler_Alarm | INTEGER(0..255) --1octet-- } |

### 10.2.3.4.5 PORT Status Group Attributes

| ASN.1 Type Definition | | |
|---|---|---|
| **Type Name :** PORTStatusGrp<br>**Comments :** PORT attribute group. | | |
| **Type Definition** | | |
| SET | {connectstate | PORTConnectState, |
| | pcmstate | PORTPCMState, |
| | pcwithhold | PORTPC_Withhold, |
| | lerflag | PORTLerFlag, |
| | hardwarepresent | PORTHardwarePresent } |


Copyright International Organization for Standardization
Provided by IHS under license with ISO
No reproduction or networking permitted without license from IHS Not for Resale

| ASN.1 Type Definition | | |
|---|---|---|
| **Type Name :** PORTConnectState<br>**Comments :** PORT attribute. | | |
| **Type Definition** | | |
| SEQUENCE | {Parameter_Type | OCTETSTRING(SIZE(2)), |
| | Parameter_Length | OCTETSTRING(SIZE(2)), |
| | Resource_Index | OCTETSTRING(SIZE(4)), |
| | PAD2 | OCTETSTRING(SIZE(2)), |
| | ConnectStateType | ConnectState --2 octets-- } |

| ASN.1 Type Definition | | |
|---|---|---|
| **Type Name :** PORTPCMState<br>**Comments :** PORT attribute. | | |
| **Type Definition** | | |
| SEQUENCE | {Parameter_Type | OCTETSTRING(SIZE(2)), |
| | Parameter_Length | OCTETSTRING(SIZE(2)), |
| | Resource_Index | OCTETSTRING(SIZE(4)), |
| | PAD2 | OCTETSTRING(SIZE(2)), |
| | PCMStateType | PCMState --2 octet-- } |

| ASN.1 Type Definition | | |
|---|---|---|
| **Type Name :** PORTPC_Withhold<br>**Comments :** PORT attribute. | | |
| **Type Definition** | | |
| SEQUENCE | {Parameter_Type | OCTETSTRING(SIZE(2)), |
| | Parameter_Length | OCTETSTRING(SIZE(2)), |
| | Resource_Index | OCTETSTRING(SIZE(4)), |
| | PAD2 | OCTETSTRING(SIZE(2)), |
| | PC_WithholdType | PC_Withhold --2 octets-- } |

| ASN.1 Type Definition | | |
|---|---|---|
| **Type Name :** PORTLerFlag<br>**Comments :** PORT attribute. | | |
| **Type Definition** | | |
| SEQUENCE | {Parameter_Type | OCTETSTRING(SIZE(2)), |
| | Parameter_Length | OCTETSTRING(SIZE(2)), |
| | Resource_Index | OCTETSTRING(SIZE(4)), |
| | PAD3 | OCTETSTRING(SIZE(3)), |
| | LerFlag | BOOLEAN } |



Copyright International Organization for Standardization
Provided by IHS under license with ISO
No reproduction or networking permitted without license from IHS
Not for Resale

| ASN.1 Type Definition | | |
|---|---|---|
| **Type Name :** PORTHardwarePresent<br>**Comments :** PORT attribute. | | |
| **Type Definition** | | |
| SEQUENCE | {Parameter_Type | OCTETSTRING(SIZE(2)), |
| | Parameter_Length | OCTETSTRING(SIZE(2)), |
| | Resource_Index | OCTETSTRING(SIZE(4)), |
| | PAD2 | OCTETSTRING(SIZE(2)), |
| | HWPresent | Present --2 octets-- } |

| ASN.1 Type Definition | | |
|---|---|---|
| **Type Name :** PORTVendorAttrib<br>**Comments :** PORT attribute. This attribute is optional. | | |
| **Type Definition** | | |
| SEQUENCE | {Parameter_Type | OCTETSTRING(SIZE(2)), |
| | Parameter_Length | OCTETSTRING(SIZE(2)), |
| | ManufacturerOUI | OCTETSTRING(SIZE(3)), |
| | VendorOctet | OCTETSTRING(SIZE(1)), |
| | VendorData | SpecificData } |

### 10.2.3.5 ASN.1 Type Definitions for Actions and Notifications

#### 10.2.3.5.1 Actions

| ASN.1 Type Definition | | |
|---|---|---|
| **Type Name :** SMTStationAction<br>**Comments :** SMT action. | | |
| **Type Definition** | | |
| SEQUENCE | {Parameter_Type | OCTETSTRING(SIZE(2)), |
| | Parameter_Length | OCTETSTRING(SIZE(2)), |
| | PAD2 | OCTETSTRING(SIZE(2)), |
| | SMTAction | ActionInfo --2 octets-- } |

| ASN.1 Type Definition | | |
|---|---|---|
| **Type Name :** SMTVendorAction<br>**Comments :** SMT action. This action is optional. | | |
| **Type Definition** | | |
| SEQUENCE | {Parameter_Type | OCTETSTRING(SIZE(2)), |
| | Parameter_Length | OCTETSTRING(SIZE(2)), |
| | ManufacturerOUI | OCTETSTRING(SIZE(3)), |
| | VendorOctet | OCTETSTRING(SIZE(1)), |
| | VendorData | SpecificData } |


Copyright International Organization for Standardization
Provided by IHS under license with ISO
No reproduction or networking permitted without license from IHS
Not for Resale

| ASN.1 Type Definition | |
|---|---|
| **Type Name :** MACVendorAction<br>**Comments :** MAC action. This action is optional. | |
| **Type Definition** | |
| SEQUENCE {Parameter_Type<br>Parameter_Length<br>ManufacturerOUI<br>VendorOctet<br>VendorData | OCTETSTRING(SIZE(2)),<br>OCTETSTRING(SIZE(2)),<br>OCTETSTRING(SIZE(3)),<br>OCTETSTRING(SIZE(1)),<br>SpecificData } |

| ASN.1 Type Definition | |
|---|---|
| **Type Name :** PATHVendorAction<br>**Comments :** PATH action. This action is optional. | |
| **Type Definition** | |
| SEQUENCE {Parameter_Type<br>Parameter_Length<br>ManufacturerOUI<br>VendorOctet<br>VendorData | OCTETSTRING(SIZE(2)),<br>OCTETSTRING(SIZE(2)),<br>OCTETSTRING(SIZE(3)),<br>OCTETSTRING(SIZE(1)),<br>SpecificData } |

| ASN.1 Type Definition | |
|---|---|
| **Type Name :** PORTAction<br>**Comments :** PORT action. | |
| **Type Definition** | |
| SEQUENCE {Parameter_Type<br>Parameter_Length<br>Resource_Index<br>PAD2<br>PortAction | OCTETSTRING(SIZE(2)),<br>OCTETSTRING(SIZE(2)),<br>OCTETSTRING(SIZE(4)),<br>OCTETSTRING(SIZE(2)),<br>ActionType --2 octets--} |

| ASN.1 Type Definition | |
|---|---|
| **Type Name :** PORTVendorAction<br>**Comments :** PORT action. This action is optional. | |
| **Type Definition** | |
| SEQUENCE {Parameter_Type<br>Parameter_Length<br>ManufacturerOUI<br>VendorOctet<br>VendorData | OCTETSTRING(SIZE(2)),<br>OCTETSTRING(SIZE(2)),<br>OCTETSTRING(SIZE(3)),<br>OCTETSTRING(SIZE(1)),<br>SpecificData } |

--`,,```,,,,````-`-`,,`,,`,`,,`---



Copyright International Organization for Standardization
Provided by IHS under license with ISO
No reproduction or networking permitted without license from IHS
Not for Resale

### 10.2.3.5.2 Notifications

| ASN.1 Type Definition | | |
|---|---|---|
| **Type Name :** SMTHoldCondition<br>**Comments :** SMT notification. This notification is optional. | | |
| **Type Definition** | | |
| SEQUENCE | {Parameter_Type | OCTETSTRING(SIZE(2)), |
| | Parameter_Length | OCTETSTRING(SIZE(2)), |
| | PAD3 | OCTETSTRING(SIZE(3)), |
| | ConditionState | BOOLEAN, |
| | PAD2 | OCTETSTRING(SIZE(2)), |
| | HoldCondition | HoldState --2 octets-- } |

| ASN.1 Type Definition | | |
|---|---|---|
| **Type Name :** SMTPeerWrapCondition<br>**Comments :** SMT notification. | | |
| **Type Definition** | | |
| SEQUENCE | {Parameter_Type | OCTETSTRING(SIZE(2)), |
| | Parameter_Length | OCTETSTRING(SIZE(2)), |
| | PAD3 | OCTETSTRING(SIZE(3)), |
| | ConditionState | BOOLEAN, |
| | PAD2 | OCTETSTRING(SIZE(2)), |
| | PeerWrapCondition | CF_State --2 octets-- } |

| ASN.1 Type Definition | | |
|---|---|---|
| **Type Name :** SMTVendorNotification<br>**Comments :** SMT notification. This notation is optional. | | |
| **Type Definition** | | |
| SEQUENCE | {Parameter_Type | OCTETSTRING(SIZE(2)), |
| | Parameter_Length | OCTETSTRING(SIZE(2)), |
| | SMTVendor | VendorType } |

| ASN.1 Type Definition | | |
|---|---|---|
| **Type Name :** MACDuplicateAddressCondition<br>**Comments :** MAC notification. | | |
| **Type Definition** | | |
| SEQUENCE | {Parameter_Type | OCTETSTRING(SIZE(2)), |
| | Parameter_Length | OCTETSTRING(SIZE(2)), |
| | Resource_Index | OCTETSTRING(SIZE(4)), |
| | PAD3 | OCTETSTRING(SIZE(3)), |
| | ConditionState | BOOLEAN, |
| | PAD2 | OCTETSTRING(SIZE(2)), |
| | DupCondition | DupConditionType, --2 octets-- |
| | LongAddress | OCTETSTRING(SIZE(6)), |
| | UNALong | OCTETSTRING(SIZE(6)) } |



Copyright International Organization for Standardization
Provided by IHS under license with ISO
No reproduction or networking permitted without license from IHS
Not for Resale

| ASN.1 Type Definition | | |
|---|---|---|
| **Type Name :** MACFrameErrorCondition<br>**Comments :** MAC notification. | | |
| **Type Definition** | | |
| SEQUENCE | {Parameter_Type | OCTETSTRING(SIZE(2)), |
| | Parameter_Length | OCTETSTRING(SIZE(2)), |
| | Resource_Index | OCTETSTRING(SIZE(4)), |
| | PAD3 | OCTETSTRING(SIZE(3)), |
| | ConditionState | BOOLEAN, |
| | Frame_Ct | INTEGER(0..4294967295), --4 octets-- |
| | Error_Ct | INTEGER(0..4294967295), |
| | Lost_Ct | INTEGER(0..4294967295), |
| | PAD2 | OCTETSTRING(SIZE(2)), |
| | FrameErrorRatio | INTEGER(0..65535) --2octets--} |

| ASN.1 Type Definition | | |
|---|---|---|
| **Type Name :** MACNotCopiedCondition<br>**Comments :** MAC notification. This notification is optional. | | |
| **Type Definition** | | |
| SEQUENCE | {Parameter_Type | OCTETSTRING(SIZE(2)), |
| | Parameter_Length | OCTETSTRING(SIZE(2)), |
| | Resource_Index | OCTETSTRING(SIZE(4)), |
| | PAD3 | OCTETSTRING(SIZE(3)), |
| | ConditionState | BOOLEAN, |
| | NotCopied_Ct | INTEGER(0..4294967295), --4 octets-- |
| | Copied_Ct | INTEGER(0..4294967295), |
| | PAD2 | OCTETSTRING(SIZE(2)), |
| | NotCopiedRatio | INTEGER(0..65535) --2octets--} |

| ASN.1 Type Definition | | |
|---|---|---|
| **Type Name :** MACNeighborChangeEvent<br>**Comments :** MAC notification. | | |
| **Type Definition** | | |
| SEQUENCE | {Parameter_Type | OCTETSTRING(SIZE(2)), |
| | Parameter_Length | OCTETSTRING(SIZE(2)), |
| | Resource_Index | OCTETSTRING(SIZE(4)), |
| | PAD3 | OCTETSTRING(SIZE(3)), |
| | MultipleOccurrence | BOOLEAN, |
| | PAD3 | OCTETSTRING(SIZE(3)), |
| | NACondition | NAConditionType, --1 octet-- |
| | Old_UNA | OCTETSTRING(SIZE(6)), |
| | New_UNA | OCTETSTRING(SIZE(6)), |
| | Old_DNA | OCTETSTRING(SIZE(6)), |
| | New_DNA | OCTETSTRING(SIZE(6)), |
| | CurrentPath | CurrentPathType, --2 octets-- |
| | SMTAddress | OCTETSTRING(SIZE(6)), } |



Copyright International Organization for Standardization
Provided by IHS under license with ISO
No reproduction or networking permitted without license from IHS
Not for Resale

| ASN.1 Type Definition | | |
|---|---|---|
| **Type Name :** MACPathChangeEvent<br>**Comments :** MAC notification. | | |
| **Type Definition** | | |
| SEQUENCE | {Parameter_Type | OCTETSTRING(SIZE(2)), |
| | Parameter_Length | OCTETSTRING(SIZE(2)), |
| | Resource_Index | OCTETSTRING(SIZE(4)), |
| | PAD3 | OCTETSTRING(SIZE(3)), |
| | MultipleOccurrence | BOOLEAN, |
| | PAD1 | OCTETSTRING(SIZE(1)), |
| | AvailablePaths | AvailablePathsType, --1 octet-- |
| | CurrentPath | CurrentPathType, --2 octets-- |
| | PAD3 | OCTETSTRING(SIZE(3)), |
| | RequestedPaths | PermittedPaths --1 octet-- } |

| ASN.1 Type Definition | | |
|---|---|---|
| **Type Name :** MACVendorNotification<br>**Comments :** MAC notification. This notification is optional. | | |
| **Type Definition** | | |
| SEQUENCE | {Parameter_Type | OCTETSTRING(SIZE(2)), |
| | Parameter_Length | OCTETSTRING(SIZE(2)), |
| | MACVendor | VendorType } |

| ASN.1 Type Definition | | |
|---|---|---|
| **Type Name :** PATHVendorNotification<br>**Comments :** PATH notification. This notification is optional. | | |
| **Type Definition** | | |
| SEQUENCE | {Parameter_Type | OCTETSTRING(SIZE(2)), |
| | Parameter_Length | OCTETSTRING(SIZE(2)), |
| | PATHVendor | VendorType } |

| ASN.1 Type Definition | | |
|---|---|---|
| **Type Name :** PORTLerCondition<br>**Comments :** PORT notification. | | |
| **Type Definition** | | |
| SEQUENCE | {Parameter_Type | OCTETSTRING(SIZE(2)), |
| | Parameter_Length | OCTETSTRING(SIZE(2)), |
| | Resource_Index | OCTETSTRING(SIZE(4)), |
| | PAD3 | OCTETSTRING(SIZE(3)), |
| | ConditionState | BOOLEAN, |
| | PAD1 | OCTETSTRING(SIZE(1)), |
| | Ler_Cutoff | INTEGER(0..255), --1 octet-- |
| | Ler_Alarm | INTEGER(0..255), |
| | Ler_Estimate | INTEGER(0..255), |
| | Ler_Reject_Ct | INTEGER(0..4294967295), --4 octets-- |
| | Ler_Ct | INTEGER(0..4294967295) } |


Copyright International Organization for Standardization
Provided by IHS under license with ISO
No reproduction or networking permitted without license from IHS
Not for Resale

| ASN.1 Type Definition | | |
|---|---|---|
| **Type Name :** PORTUndesiredConnectionAttemptEvent<br>**Comments :** PORT notification. | | |
| **Type Definition** | | |
| SEQUENCE | {Parameter_Type | OCTETSTRING(SIZE(2)), |
| | Parameter_Length | OCTETSTRING(SIZE(2)), |
| | Resource_Index | OCTETSTRING(SIZE(4)), |
| | PAD3 | OCTETSTRING(SIZE(3)), |
| | MultipleOccurrence | BOOLEAN, |
| | PortType | PortTypeType, --2 octets-- |
| | ConnectStateType | ConnectState, --2 octets-- |
| | PC_Neighbor | PortTypeType, |
| | PC_WithholdType | PC_Withhold --2 octets-- } |

| ASN.1 Type Definition | | |
|---|---|---|
| **Type Name :** PORTEBErrorCondition<br>**Comments :** PORT notification. This notification is optional. | | |
| **Type Definition** | | |
| SEQUENCE | {Parameter_Type | OCTETSTRING(SIZE(2)), |
| | Parameter_Length | OCTETSTRING(SIZE(2)), |
| | Resource_Index | OCTETSTRING(SIZE(4)), |
| | PAD3 | OCTETSTRING(SIZE(3)), |
| | ConditionState | BOOLEAN, |
| | EBErrorCount | INTEGER(0..4294967295) --4 octets-- } |

| ASN.1 Type Definition | | |
|---|---|---|
| **Type Name :** PORTPathChangeEvent<br>**Comments :** PORT notification. | | |
| **Type Definition** | | |
| SEQUENCE | {Parameter_Type | OCTETSTRING(SIZE(2)), |
| | Parameter_Length | OCTETSTRING(SIZE(2)), |
| | Resource_Index | OCTETSTRING(SIZE(4)), |
| | PAD3 | OCTETSTRING(SIZE(3)), |
| | MultipleOccurrence | BOOLEAN, |
| | PAD1 | OCTETSTRING(SIZE(1)), |
| | AvailablePaths | AvailablePathsType, --1 octet-- |
| | CurrentPath | CurrentPathType, --2 octets-- |
| | RequestedPaths | RequestedPathsType, --4 octets-- |
| | MyType | PortTypeType, --2 octet-- |
| | NeighborType | PortTypeType } |

--`,,```,,,,````-`-`,,`,,`,`,,`---



Copyright International Organization for Standardization
Provided by IHS under license with ISO
No reproduction or networking permitted without license from IHS
Not for Resale

| ASN.1 Type Definition | |
|---|---|
| **Type Name :** PORTVendorNotification<br>**Comments :** PORT notification This notification is optional. | |
| **Type Definition** | |
| SEQUENCE {Parameter_Type<br>Parameter_Length<br>PORTVendor | OCTETSTRING(SIZE(2)),<br>OCTETSTRING(SIZE(2)),<br>VendorType } |

### 10.2.3.6 ASN.1 Common Type Definitions

| ASN.1 Type Definition | |
|---|---|
| **Type Name :** ActionInfo<br>**Comments :** Common type definition. | |
| **Type Definition** | |
| ENUMERATED | {connect(0),<br>disconnect(1),<br>path_test(2),<br>self_test(3),<br>disable_a(4),<br>disable_b(5),<br>disable_m(6) } |

| ASN.1 Type Definition | | |
|---|---|---|
| **Type Name :** ActionType<br>**Comments :** Common type definition. | | |
| **Type Definition** | | |
| ENUMERATED | {mainport(0),<br>enableport(1),<br>disableport(2),<br>startport(3),<br>stopport(4) | -- signal PC_Maint<br>-- signal PC_Enable<br>-- signal PC_Disable<br>-- signal PC_Start<br>-- signal PC_Stop } |

| ASN.1 Type Definition |
|---|
| **Type Name :** AvailablePathsType<br>**Comments :** Common type definition. |
| **Type Definition** |
| [8] IMPLICIT BITSTRING<br>{primary(0),<br>secondary(1),<br>local(2)} --(SIZE(8))-- |


Copyright International Organization for Standardization
Provided by IHS under license with ISO
No reproduction or networking permitted without license from IHS Not for Resale

| ASN.1 Type Definition |
|---|
| **Type Name :** BridgeType<br>**Comments :** Common type definition. |
| **Type Definition** |
| [16] IMPLICIT BITSTRING<br>{tb(0), --Transparent Bridging Active--<br>sr(1), --Source Routing Active--<br>srt(2) --Source Routing Transparent Active-- } --(SIZE(16))-- |

| ASN.1 Type Definition |
|---|
| **Type Name :** Capabilities<br>**Comments :** Common type definition. |
| **Type Definition** |
| [16] IMPLICIT BITSTRING<br>{holdavailable(0),<br>cf_wrap_ab(1) } (SIZE(16))-- |

| ASN.1 Type Definition |
|---|
| **Type Name :** CF_State<br>**Comments :** Common type definition. |
| **Type Definition** |
| ENUMERATED {isolated(0),<br>local_a(1),<br>local_b(2),<br>local_ab(3),<br>local_s(4),<br>wrap_a(5),<br>wrap_b(6),<br>wrap_ab(7),<br>wrap_s(8),<br>c_wrap_a(9),<br>c_wrap_b(10),<br>c_wrap_s(11),<br>thru(12) } |

| ASN.1 Type Definition |
|---|
| **Type Name :** ConfigPolicyType<br>**Comments :** Common type definition. |
| **Type Definition** |
| [16] IMPLICIT BITSTRING<br>{configurationhold(0) } --(SIZE(16))-- |



Copyright International Organization for Standardization
Provided by IHS under license with ISO
No reproduction or networking permitted without license from IHS
Not for Resale

| ASN.1 Type Definition |
|---|
| **Type Name :** Connection<br>**Comments :** Common type definition. |
| **Type Definition** |
| [16] IMPLICIT BITSTRING<br>{rejectA_A(0),<br>rejectA_B(1),<br>rejectA_S(2),<br>rejectA_M(3),<br>rejectB_A(4),<br>rejectB_B(5),<br>rejectB_S(6),<br>rejectB_M(7),<br>rejectS_A(8),<br>rejectS_B(9),<br>rejectS_S(10),<br>rejectS_M(11),<br>rejectM_A(12),<br>rejectM_B(13),<br>rejectM_S(14),<br>rejectM_M(15) } --(SIZE(16))--<br>-- Note that bit 15, reject M-M, is always set and cannot be cleared -- |

| ASN.1 Type Definition |
|---|
| **Type Name :** ConnectionType<br>**Comments :** Common type definition. |
| **Type Definition** |
| [16] IMPLICIT BITSTRING<br>{rejectA_A(0),<br>rejectB_B(1),<br>rejectS_S(2),<br>rejectA_M(3),<br>rejectB_M(4),<br>rejectA_S(5),<br>rejectB_S(6),<br>rejectA_B(7),<br>rejectB_A(8),<br>rejectS_A(9),<br>rejectS_B(10),<br>rejectS_M(11),<br>rejectM_A(12),<br>rejectM_B(13),<br>rejectM_S(14),<br>rejectM_M(15) } --(SIZE(16))--<br>-- Note that bit 15, reject M-M, is always set and cannot be cleared -- |


Copyright International Organization for Standardization
Provided by IHS under license with ISO
No reproduction or networking permitted without license from IHS
Not for Resale

| ASN.1 Type Definition |
|---|
| **Type Name :** ConnectionPolicies<br>**Comments :** Common type definition. |
| **Type Definition** |
| [8] IMPLICIT BITSTRING<br>{pc_mac_lct(0),<br>pc_mac_loop(1) } --(SIZE(8))-- |

| ASN.1 Type Definition |
|---|
| **Type Name :** ConnectState<br>**Comments :** Common type definition. |
| **Type Definition** |
| ENUMERATED {disabled(0),<br>connecting(1),<br>standby(2),<br>active(3) } |

| ASN.1 Type Definition |
|---|
| **Type Name :** CurrentPathType<br>**Comments :** Common type definition. |
| **Type Definition** |
| ENUMERATED {isolated(0),<br>local(1),<br>secondary(2),<br>primary(3),<br>concatenated(4),<br>thru(5) } |

| ASN.1 Type Definition |
|---|
| **Type Name :** DupAddressTest<br>**Comments :** Common type definition. |
| **Type Definition** |
| ENUMERATED {none(0),<br>pass(1),<br>fail(2) } |



Copyright International Organization for Standardization
Provided by IHS under license with ISO
No reproduction or networking permitted without license from IHS Not for Resale

| ASN.1 Type Definition |
|---|
| **Type Name :** DuplAddressType<br>**Comments :** Common type definition. |
| **Type Definition** |
| [8] IMPLICIT BITSTRING<br>{MyDuplicate(0), --value of fddiMACDA_Flag for this MAC--<br>MyUNADuplicate(1) --value of fddiMACUNDA_Flag for this MAC--} --(SIZE(8))-- |

| ASN.1 Type Definition |
|---|
| **Type Name :** DupConditionType<br>**Comments :** Common type definition. |
| **Type Definition** |
| [16] IMPLICIT BITSTRING<br>{mydup(0), --DA_Flag--<br>unadup(1) --UNDA_Flag-- } --(SIZE(16))-- |

| ASN.1 Type Definition |
|---|
| **Type Name :** ECMState<br>**Comments :** Common type definition. |
| **Type Definition** |
| ENUMERATED {ec0(0), --Out--<br>ec1(1), --In--<br>ec2(2), --Trace--<br>ec3(3), --Leave--<br>ec4(4), --Path_Test--<br>ec5(5), --Insert--<br>ec6(6), --Check--<br>ec7(7) --Deinsert-- } |

| ASN.1 Type Definition |
|---|
| **Type Name :** FS_Functions<br>**Comments :** Common type definition. |
| **Type Definition** |
| [16] IMPLICIT BITSTRING<br>{fs_repeating(0),<br>fs_setting(1),<br>fs_clearing(2) } --(SIZE(16))-- |



Copyright International Organization for Standardization
Provided by IHS under license with ISO
No reproduction or networking permitted without license from IHS Not for Resale

| ASN.1 Type Definition |
|---|
| **Type Name :** HoldState<br>**Comments :** Common type definition. |
| **Type Definition** |
| ENUMERATED {not_holding(0),<br>holding_prm(1), -- holding on primary--<br>holding_sec(2) -- holding on secondary-- } |

| ASN.1 Type Definition |
|---|
| **Type Name :** Indexes<br>**Comments :** Common type definition. |
| **Type Definition** |
| SET OF { ResourceId INTEGER(0..65535) --2 octets-- } |

| ASN.1 Type Definition |
|---|
| **Type Name :** LineState<br>**Comments :** Common type definition. |
| **Type Definition** |
| ENUMERATED {qls(0), -- quiet--<br>ils(1), -- idle--<br>mls(2), -- master--<br>hls(3), -- halt--<br>pdr(4), -- receive = active, transmit = PDR--<br>lsu(5), -- receive = unknown--<br>nls(6) -- receive = noise-- } |

| ASN.1 Type Definition |
|---|
| **Type Name :** LongAddressSet<br>**Comments :** Common type definition. |
| **Type Definition** |
| SET OF {LongAddressType OCTETSTRING(SIZE(6))} |

| ASN.1 Type Definition |
|---|
| **Type Name :** NAConditionType<br>**Comments :** Common type definition. |
| **Type Definition** |
| [8] IMPLICIT BITSTRING<br>{unachange(0),<br>dnachange(1) } --(SIZE(8))-- |



Copyright International Organization for Standardization
Provided by IHS under license with ISO
No reproduction or networking permitted without license from IHS
Not for Resale

| ASN.1 Type Definition |
|---|
| **Type Name :** PathConfig<br>**Comments :** Common type definition. |
| **Type Definition** |
| SEQUENCE OF {ResourceTagType ResourceTag} |

| ASN.1 Type Definition | | |
|---|---|---|
| **Type Name :** PCMState<br>**Comments :** Common type definition. | | |
| **Type Definition** | | |
| ENUMERATED | {pc0(0),<br>pc1(1),<br>pc2(2),<br>pc3(3),<br>pc4(4),<br>pc5(5),<br>pc6(6),<br>pc7(7),<br>pc8(8),<br>pc9(9) | -- Off--<br>-- Break--<br>-- Trace--<br>-- Connect--<br>-- Next--<br>-- Signal--<br>-- Join--<br>-- Verify--<br>-- Active--<br>-- Maint--} |

| ASN.1 Type Definition | |
|---|---|
| **Type Name :** PC_Withhold<br>**Comments :** Common type definition. | |
| **Type Definition** | |
| ENUMERATED | {none(0),<br>m_m(1),<br>otherincompatible(2),<br>pathnotavailable(3)} |

| ASN.1 Type Definition |
|---|
| **Type Name :** PermittedPaths<br>**Comments :** Common type definition. |
| **Type Definition** |
| [8] IMPLICIT BITSTRING<br>{local(0),<br>secondary_alternate(1),<br>primary_alternate(2),<br>concatenate_alternate(3),<br>secondary_preferred(4),<br>primary_preferred(5),<br>concatenated_preferred(6),<br>thru(7) } --(SIZE(8))-- |


Copyright International Organization for Standardization
Provided by IHS under license with ISO
No reproduction or networking permitted without license from IHS
Not for Resale

| ASN.1 Type Definition |
|---|
| **Type Name :** PMDClass<br>**Comments :** Common type definition. |
| **Type Definition** |
| EMUNERATED {multimode(0),<br>single_mode1(1),<br>single_mode2(2),<br>sonet(3),<br>low_cost_fiber(4),<br>twisted_pair(5),<br>unknown(6),<br>unspecified(7) } |

| ASN.1 Type Definition |
|---|
| **Type Name :** PortTypeType<br>**Comments :** Common type definition. |
| **Type Definition** |
| ENUMERATED {a(0),<br>b(1),<br>s(2),<br>m(3),<br>none(4) } |

| ASN.1 Type Definition |
|---|
| **Type Name :** Present<br>**Comments :** Common type definition. |
| **Type Definition** |
| ENUMERATED {notpresent(0),<br>present(1) } |

| ASN.1 Type Definition |
|---|
| **Type Name :** RequestedPathsType<br>**Comments :** Common type definition. |
| **Type Definition** |
| SEQUENCE {none PermittedPaths,<br>tree PermittedPaths,<br>peer PermittedPaths } |



Copyright International Organization for Standardization
Provided by IHS under license with ISO
No reproduction or networking permitted without license from IHS
Not for Resale

| ASN.1 Type Definition |
|---|
| **Type Name :** ResourceTag<br>**Comments :** Common type definition. |
| **Type Definition** |
| SEQUENCE {resource_type ResourceType, --2 octets--<br>resource_index INTEGER(0..65535), --2 octets--<br>current_path CurrentPathType --2 octets-- } |

| ASN.1 Type Definition |
|---|
| **Type Name :** ResourceType<br>**Comments :** Common type definition. |
| **Type Definition** |
| ENUMERATED {mac(2),<br>port(4) --2 octets-- } |

| ASN.1 Type Definition | | |
|---|---|---|
| **Type Name :** RMTState<br>**Comments :** Common type definition. | | |
| **Type Definition** | | |
| ENUMERATED | {rm0(0), | -- Isolated-- |
| | rm1(1), | -- Non_Op-- |
| | rm2(2), | -- Ring_Op-- |
| | rm3(3), | -- Detect-- |
| | rm4(4), | -- Non_Op_Dup-- |
| | rm5(5), | -- Ring_Op_Dup-- |
| | rm6(6), | -- Directed-- |
| | rm7(7) | -- Trace-- } |

| ASN.1 Type Definition |
|---|
| **Type Name :** ShortAddressSet<br>**Comments :** Common type definition. |
| **Type Definition** |
| SET OF {ShortAddressType OCTETSTRING(SIZE(2))} |

| ASN.1 Type Definition |
|---|
| **Type Name :** SpecificData<br>**Comments :** Common type definition. |
| **Type Definition** |
| SET {Data ANY }<br>--The syntax for the data is defined by the vendor identified by the manufacturerOUI-- |

--`,,```,,,,````-`-`,,`,,`,`,,`---



Copyright International Organization for Standardization
Provided by IHS under license with ISO
No reproduction or networking permitted without license from IHS
Not for Resale

| ASN.1 Type Definition |
|---|
| **Type Name :** Status<br>**Comments :** Common type definition. |
| **Type Definition** |
| ENUMERATED {concatenated(0),<br>separated(1),<br>thru(2) } |

| ASN.1 Type Definition |
|---|
| **Type Name :** TopologyType<br>**Comments :** Common type definition. |
| **Type Definition** |
| [8] IMPLICIT BITSTRING<br>{PeerWrap(0),<br>UnattachedConcentrator(1),<br>TwistedRing_AA(2),<br>TwistedRing_BB(3),<br>RootedStation(4),<br>StatusReporting(5), --fddiSMTStatRptPolicy--<br>SynchronousService(6) --fddiPATHSbaOverhead--} --(SIZE(8))-- |

| ASN.1 Type Definition |
|---|
| **Type Name :** TraceStatus<br>**Comments :** Common type definition. |
| **Type Definition** |
| [16] IMPLICIT BITSTRING<br>{traceinitiated(0),<br>tracepropagated(1),<br>traceterminated(2),<br>tracetimeout(3) } --(SIZE(16))-- |

| ASN.1 Type Definition |
|---|
| **Type Name :** VendorType<br>**Comments :** Common type definition. |
| **Type Definition** |
| SET OF {VendorMIBType VMType } |



Copyright International Organization for Standardization
Provided by IHS under license with ISO
No reproduction or networking permitted without license from IHS Not for Resale

| ASN.1 Type Definition | | |
|---|---|---|
| **Type Name :** VMType<br>**Comments :** Common type definition. | | |
| **Type Definition** | | |
| SEQUENCE | {ManufacturerOUI<br>VendorOctet<br>VendorData | OCTETSTRING(SIZE(3)),<br>OCTETSTRING(SIZE(1)),<br>SpecificData } |

### 10.2.3.7 SMT Information Field Type Definitions

#### 10.2.3.7.1 NIF InfoField Type Definition

| ASN.1 Type Definition | | |
|---|---|---|
| **Type Name :** NIF_Info<br>**Comments :** NIF information field. | | |
| **Type Definition** | | |
| SET | {upstreamneighboraddress<br>stationdescriptor<br>stationstate<br>macframestatusfunctions | UNA_GENERAL,<br>StationDescriptor_GENERAL,<br>StationState_GENERAL,<br>MACFrameStatusFunctions } |

#### 10.2.3.7.2 SRF InfoField Type Definition

| ASN.1 Type Definition | | |
|---|---|---|
| **Type Name :** SRF_Info<br>**Comments :** SRF information field. | | |
| **Type Definition** | | |
| SET | {timestamp<br>transitiontimestamp<br>eventcondition | SMTTimeStamp,<br>SMTTransitionTimeStamp,<br>ANY --notifications-- } |

#### 10.2.3.7.3 PMF InfoField Type Definition

| ASN.1 Type Definition | | |
|---|---|---|
| **Type Name :** PMFRequest_Info<br>**Comments :** PMF request information field. | | |
| **Type Definition** | | |
| SET | {authorization<br>setcount<br>targetattribute<br>--an attribute to be modified or an action to be invoked. One attribute permitted per PMF set request.--} | Authorization_GENERAL OPTIONAL,<br>SMTSetCount OPTIONAL,<br>ANY |



Copyright International Organization for Standardization
Provided by IHS under license with ISO
No reproduction or networking permitted without license from IHS
Not for Resale

| ASN.1 Type Definition |
|---|
| **Type Name :** PMFResponse_Info<br>**Comments :** PMF response information field. |
| **Type Definition** |
| SET {reasoncode ReasonCode_GENERAL,<br>timestamp SMTTimeStamp,<br>setcount SMTSetCount OPTIONAL,<br>--Included if PMF Set protocol is implemented--<br>lastsetstationid SMTLastSetStationId OPTIONAL,<br>--Included if PMF Set protocol is implemented--<br>requestedinfo ANY --requested parameter(s)-- } |

### 10.2.4 Test Suite Operation Definition

| Test Suite Operation Definition |
|---|
| **Operation Name** : ECH_DATA(length: INTEGER)<br>**Result Type** : OCTETSTRING<br>**Comments** : |
| **Description** |
| ECH_DATA is an operator defined any length characters.<br>For example: ECH_DATA(5) = “sgGer”<br>ECH_DATA(21) = “Any Length Characters” |

| Test Suite Operation Definition |
|---|
| **Operation Name** : TIME(Value: INTEGER)<br>**Result Type** : INTEGER<br>**Comments** : |
| **Description** |
| TIME(Value) specifies octet units of 80 nanoseconds as an integer value where Value must be in milliseconds.<br><br>For example:<br>TIME(2ms) = (2x10E6) / 80 = 25,000<br>TIME(3ms) = (3x10E6) / 80 = 37,500 |

| Test Suite Operation Definition |
|---|
| **Operation Name** : TTC(TIME(Value))<br>**Result Type** : INTEGER<br>**Comments** : |
| **Description** |
| This operator will convert the integer TIME(Value) into two’s complement format. |



--`,,```,,,,````-`-`,,`,,`,`,,`---
Copyright International Organization for Standardization
Provided by IHS under license with ISO
No reproduction or networking permitted without license from IHS
Not for Resale

| Test Suite Operation Definition | |
|---|---|
| **Operation Name** | : USR_DATA(Length: INTEGER) |
| **Result Type** | : OCTETSTRING |
| **Comments** | : |
| **Description** | |
| USR_DATA(Length) is an ASCII string of “Length” octets in length.<br>For example: USR_DATA(5) = ASCII string of 5 octets in length.<br>USR_DATA(10) = ASCII string of 10 octets in length.<br>USR_DATA(32) = ASCII string of 32 octets in length. | |

### 10.2.5 Test Suite Parameter Declarations

| Test Suite Parameter Declarations | | | |
|---|---|---|---|
| **Parameter Name** | **Type** | **PICS/PIXIT Ref** | **Comments** |
| AvailablePaths_IUT | AvailablePathsType | PIXIT 5.1 | Path types that are available in the IUT. |
| BridgeType_IUT | BridgeType | PIXIT 11 | Bridge types present in the IUT. |
| Capabilities_IUT | Capabilities | PIXIT 7 & 8 | Configuration capabilities that are supported by the IUT. |
| Connection_IUT | Connection | PIXIT 9 | Connection policies in the IUT. |
| IUT_ADDRESS | OCTETSTRING | PIXIT 1.1 | 48-bit address assigned to IUT. MSB on the left. |
| TESTER_ADDRESS | OCTETSTRING | PIXIT 1.2 | 48-bit address assigned to the tester. MSB on the left. |
| OTHER_ADDRESS | OCTETSTRING | PIXIT 1.3 | 48-bit address assigned to a station other than IUT and tester. MSB on the left. |
| MANUF_OUI | OCTETSTRING | PIXIT 3.1 | Manufacturer OUI, the three octet Organizationally Unique Identifier (OUI) assigned by IEEE. |
| MANUF_DATA | OCTETSTRING | PIXIT 3.2 | 32 octets of manufacturer data. |
| IUT_MACs | INTEGER | PIXIT 4.1.1 | Number of MACs in the IUT (station or concentrator). This number includes MAC instances that are not supported by underlying hardware. |
| IUT_NonMasters | INTEGER | PIXIT 4.1.2 | Number of A, B, and S ports in the IUT (station or concentrator). This number includes port instances that are not supported by underlying hardware. |
| IUT_Masters | INTEGER | PIXIT 4.1.3 | Number of M ports in the IUT if IUT is a concentrator. This number includes port instances that are not supported by underlying hardware. |
| D_Max | INTEGER | PIXIT 2.5 | Maximum ring latency that IUT supports (in milliseconds). |
| IUT_T_Max | INTEGER | PIXIT 2.6.1 | Maximum Token-Rotation-Timer (TRT) of the IUT (in milliseconds). |
| TSTR_T_Max | INTEGER | PIXIT 2.6.2 | Maximum TRT of the tester (in milliseconds). |
| IUT_TvxValue | INTEGER | PIXIT 2.7.1 | Maximum Valid-Transmission-Timer (TVX) of the IUT (in milliseconds). |
| TSTR_TvxValue | INTEGER | PIXIT 2.7.2 | Maximum TVX of the tester (in milliseconds). |
| Trace_Max | INTEGER | PIXIT 2.2 | Maximum propagation time for a Trace on an FDDI topology (in seconds). |

Continued on next page ....



Copyright International Organization for Standardization
Provided by IHS under license with ISO
No reproduction or networking permitted without license from IHS
Not for Resale

..... Continued from previous page.

| Test Suite Parameter Declarations | | | |
|---|---|---|---|
| **Parameter Name** | **Type** | **PICS/PIXIT Ref** | **Comments** |
| T_Limit | INTEGER | PIXIT 2.3 | The rate-limiting interval for the Status Report protocol (in seconds). |
| T_Notify | INTEGER | PIXIT 2.1 | |
| T_NN_Out | INTEGER | PIXIT 2.4 | The interval between successive iterations of the Neighbor Notification protocol (in seconds). |
| P_CurrentPath | CurrentPathType | PIXIT 6.2 | The maximum interval between successive NIF receptions from the upstream and downstream neighbors to maintain neighbor information validity (in seconds). |
| P_Indx | INTEGER | PIXIT 2.8 | Port Current Path. Path(s) into which this port is currently inserted. |
| PORT_Indx | INTEGER | PIXIT 2.8 | Port Index. An index used to refer to an instance of a port Resource ID. |
| M_Indx | INTEGER | PIXIT 2.9 | Port Index. An index used to refer to all instances of a port object. |
| M_Indx1 | INTEGER | PIXIT 2.9 | MAC Index. An index used to refer to an instance of a MAC Resource ID. |
| MAC_Indx | INTEGER | PIXIT 2.9 | MAC Index. An index used to refer to the first instance of a MAC Resource ID. |
| PMD_Type | PMDClass | PIXIT 10 | Type of PMD entity associated with a port. |
| MACAvailPaths | AvailablePathsType | PIXIT 5.2 | Path types that are available in an IUT MAC. |
| MACCurrPath | CurrentPathType | PIXIT 6.1 | Path type into which an IUT MAC is currently inserted. |
| LONG_GRP_ADD | OCTETSTRING | PIXIT 12.1 | 48-Bit long group address of an IUT MAC. |
| SHORT_GRP_ADD | OCTETSTRING | PIXIT 12.2 | 16-bit short group address of an IUT MAC. |
| T_Pri0 | INTEGER | PIXIT 13.1 | T_Pri0 value that IUT supports (in milliseconds). |
| T_Pri1 | INTEGER | PIXIT 13.2 | T_Pri1 value that IUT supports (in milliseconds). |
| T_Pri2 | INTEGER | PIXIT 13.3 | T_Pri2 value that IUT supports (in milliseconds). |
| T_Pri3 | INTEGER | PIXIT 13.4 | T_Pri3 value that IUT supports (in milliseconds). |
| T_Pri4 | INTEGER | PIXIT 13.5 | T_Pri4 value that IUT supports (in milliseconds). |
| T_Pri5 | INTEGER | PIXIT 13.6 | T_Pri5 value that IUT supports (in milliseconds). |
| T_Pri6 | INTEGER | PIXIT 13.7 | T_Pri6 value that IUT supports (in milliseconds). |
| T_Rmode | INTEGER | PIXIT 14 | Time for which a restricted dialogue may persist on the ring (in milliseconds). |
| T_Next9 | INTEGER | PIXIT 15 | Time for MAC Local Loop to prevent deadlock (in milliseconds). |

--`,,```,,,,````-`-`,,`,,`,`,,`---



Copyright International Organization for Standardization
Provided by IHS under license with ISO
No reproduction or networking permitted without license from IHS
Not for Resale

### 10.2.6 Test Suite Constant Declarations

| Test Suite Constant Declarations | | | |
|---|---|---|---|
| **Constant Name** | **Type** | **Value** | **Comments** |
| JK | SYMBOL[2] | '1100010001'B | Start Delimiter |
| TT | SYMBOL[2] | '0110101101'B | End Delimiter |
| T | SYMBOL | '01101'B | T Symbol |
| I | SYMBOL | '11111'B | Idle symbol |
| SET | SYMBOL | '11001'B | SET Symbol |
| RESET | SYMBOL | '00111'B | RESET Symbol |
| PAD_1 | OCTETSTRING | '00'H | |
| PAD_2 | OCTETSTRING[2] | '0000'H | |
| PAD_3 | OCTETSTRING[3] | '000000'H | |
| SMT_Directed_Beacon_DA | OCTETSTRING[6] | '800143008000'H | MSB Representation |
| SMT_SRF_DA | OCTETSTRING[6] | '800143008008'H | MSB Representation |
| All_FDDIConcentratorMACs | OCTETSTRING[6] | '800143008004'H | MSB Representation |
| SMT_SBA_DA | OCTETSTRING[6] | '80014300800C'H | MSB Representation |
| SMT_Unknown_Address | OCTETSTRING[6] | '00001F000000'H | MSB Representation |
| Broadcast | OCTETSTRING[6] | 'FFFFFFFFFFFF'H | MSB Representation |
| LLC_DATA | OCTETSTRING[6] | '0123456789ABCDEF'H | |

### 10.2.7 Test Suite Variable Declarations

| Test Suite Variable Declarations | | | |
|---|---|---|---|
| **Variable Name** | **Type** | **Value** | **Comments** |
| NN_Transaction_ID | OCTETSTRING | | Current Transaction_ID used by the Neighbor Notification protocol. |
| New_SetCount | OCTETSTRING | | New SetCount used by the IUT (fddiSMTSetCount). |
| FRM_CT1 | INTEGER(0..4294967295) | | Initial Frame_Ct received by an IUT MAC. |
| FRM_CT2 | INTEGER(0..4294967295) | | Final Frame_Ct received by an IUT MAC. |
| CP_CT1 | INTEGER(0..4294967295) | | Initial Copied_Ct of an IUT MAC. |
| CP_CT2 | INTEGER(0..4294967295) | | Final Copied_Ct of an IUT MAC. |
| XMIT_CT1 | INTEGER(0..4294967295) | | Initial Transmit_Ct of an IUT MAC. |
| XMIT_CT2 | INTEGER(0..4294967295) | | Final Transmit_Ct of an IUT MAC. |
| TK_CT1 | INTEGER(0..4294967295) | | Initial Token_Ct of an IUT MAC. |
| TK_CT2 | INTEGER(0..4294967295) | | Final Token_Ct of an IUT MAC. |
| BAD_FCS | OCTETSTRING[8] | | A bad Frame Check Sequence (FCS) generated by the tester for testing Error_Ct purpose. |
| ER_CT1 | INTEGER(0..4294967295) | | Initial Error_Ct of an IUT MAC. |
| ER_CT2 | INTEGER(0..4294967295) | | Final Error_Ct of an IUT MAC. |
| LST_CT1 | INTEGER(0..4294967295) | | Initial Lost_Ct of an IUT MAC. |
| LST_CT2 | INTEGER(0..4294967295) | | Final Lost_Ct of an IUT MAC. |
| TE_CT1 | INTEGER(0..4294967295) | | Initial TvxExpired_Ct. |
| TE_CT2 | INTEGER(0..4294967295) | | Final TvxExpired_Ct. |
| LT_CT1 | INTEGER(0..4294967295) | | Initial Late_Ct of an IUT MAC. |
| LT_CT2 | INTEGER(0..4294967295) | | Final Late_Ct of an IUT MAC. |
| R_Latency | INTEGER(0..4294967295) | | Current accumulated latency of the ring associated with the current IUT path (fddiPATHRingLatency). |

--`,,```,,,,````-`-`,,`,,`,`,,`---



Copyright International Organization for Standardization
Provided by IHS under license with ISO
No reproduction or networking permitted without license from IHS
Not for Resale

| Test Case Variable Declarations | | | |
|---|---|---|---|
| **Variable Name** | **Type** | **Value** | **Comments** |
| NUM1 | INTEGER(0..4294967295) | | Number of frames received from the IUT. |
| NUM2 | INTEGER(0..4294967295) | | Number of frames copied into the IUT. |
| NUM3 | INTEGER(0..4294967295) | | Number of frames transmitted by the IUT. |
| NUM4 | INTEGER(0..4294967295) | | Number of tokens received by the IUT. |
| NUM5 | INTEGER(0..4294967295) | | Number of frames having bad FCS received by the IUT. |
| NUM6 | INTEGER(0..4294967295) | | Number of frames having invalid symbol received by the IUT. |
| **Detailed Comments:** | | | |

### 10.2.8 Timer Declarations

| Timer Declarations | | | |
|---|---|---|---|
| **Timer Name** | **Duration** | **Unit** | **Comments** |
| Timer_30 | 30 | sec | Maximum time for a station to respond to a request. |
| Timer_60 | 60 | sec | Time for waiting to receive a NIF request frame from the IUT. |
| Timer_TNN | T_Notify | sec | Timer, Neighbor Notification. |
| Trace_Max | 7 | sec | Maximum propagation time for a Trace on an FDDI topology. |
| Timer_TSR | T_Limit | sec | Timer, Status Report. |
| Timer_TVU | T_NN_Out | sec | Timer, Valid Upstream Neighbor. |
| Timer_TVD | T_NN_Out | sec | Timer, Valid Downstream Neighbor. |



Copyright International Organization for Standardization
Provided by IHS under license with ISO
No reproduction or networking permitted without license from IHS
Not for Resale

### 10.2.9 ASN.1 PDU Type Definition

#### 10.2.9.1 NIF PDU Type Definition

| ASN.1 PDU Type Definition | | |
|---|---|---|
| **PDU Name** : NIF_Frame<br>**PCO Type** :<br>**Comments** : Neighbor Information Frame (NIF). | | |
| **Type Definition** | | |
| SEQUENCE | {SD | SYMBOL(SIZE(2)), |
| | FC | OCTETSTRING(SIZE(1)), |
| | DA | OCTETSTRING(SIZE(6)), |
| | SA | OCTETSTRING(SIZE(6)), |
| | Frame_Class | OCTETSTRING(SIZE(1)), |
| | Frame_Type | OCTETSTRING(SIZE(1)), |
| | Version_ID | OCTETSTRING(SIZE(2)), |
| | Transaction_ID | OCTETSTRING(SIZE(4)), |
| | Station_ID1 | OCTETSTRING(SIZE(2)), |
| | Station_ID2 | OCTETSTRING(SIZE(6)), |
| | PAD | OCTETSTRING(SIZE(2)), |
| | InfoField_Length | OCTETSTRING(SIZE(2)), |
| | Info | NIF_Info, |
| | FCS | OCTETSTRING(SIZE(4)), |
| | ED | SYMBOL(SIZE(1)), |
| | FS_E | SYMBOL(SIZE(1)), |
| | FS_A | SYMBOL(SIZE(1)), |
| | FS_C | SYMBOL(SIZE(1)), |
| | FS_2 | SYMBOL(SIZE(0..4)) OPTIONAL, |
| | FS_T | SYMBOL(SIZE(1)) } |



Copyright International Organization for Standardization
Provided by IHS under license with ISO
No reproduction or networking permitted without license from IHS
Not for Resale

### 10.2.9.2 SRF PDU Type Definition

| ASN.1 PDU Type Definition | | |
|---|---|---|
| **PDU Name** : SRF_Frame<br>**PCO Type** :<br>**Comments** : Status Report Frame (SRF). | | |
| **Type Definition** | | |
| SEQUENCE | {SD | SYMBOL(SIZE(2)), |
| | FC | OCTETSTRING(SIZE(1)), |
| | DA | OCTETSTRING(SIZE(6)), |
| | SA | OCTETSTRING(SIZE(6)), |
| | Frame_Class | OCTETSTRING(SIZE(1)), |
| | Frame_Type | OCTETSTRING(SIZE(1)), |
| | Version_ID | OCTETSTRING(SIZE(2)), |
| | Transaction_ID | OCTETSTRING(SIZE(4)), |
| | Station_ID1 | OCTETSTRING(SIZE(2)), |
| | Station_ID2 | OCTETSTRING(SIZE(6)), |
| | PAD | OCTETSTRING(SIZE(2)), |
| | InfoField_Length | OCTETSTRING(SIZE(2)), |
| | Info | SRF_Info, |
| | FCS | OCTETSTRING(SIZE(4)), |
| | ED | SYMBOL(SIZE(1)), |
| | FS_E | SYMBOL(SIZE(1)), |
| | FS_A | SYMBOL(SIZE(1)), |
| | FS_C | SYMBOL(SIZE(1)), |
| | FS_2 | SYMBOL(SIZE(0..4)) OPTIONAL, |
| | FS_T | SYMBOL(SIZE(1)) } |



Copyright International Organization for Standardization
Provided by IHS under license with ISO
No reproduction or networking permitted without license from IHS
Not for Resale

### 10.2.9.3 PMF PDU Type Definition

| ASN.1 PDU Type Definition | | |
|---|---|---|
| **PDU Name** : PMF_Frame1<br>**PCO Type** :<br>**Comments** : Parameter Management Frame (PMF) get request. | | |
| **Type Definition** | | |
| SEQUENCE | {SD | SYMBOL(SIZE(2)), |
| | FC | OCTETSTRING(SIZE(1)), |
| | --NSA = ‘4F’H; SMT_Info = ‘41’H-- | |
| | DA | OCTETSTRING(SIZE(6)), |
| | SA | OCTETSTRING(SIZE(6)), |
| | Frame_Class | OCTETSTRING(SIZE(1)), |
| | Frame_Type | OCTETSTRING(SIZE(1)), |
| | Version_ID | OCTETSTRING(SIZE(2)), |
| | Transaction_ID | OCTETSTRING(SIZE(4)), |
| | Station_ID1 | OCTETSTRING(SIZE(2)), |
| | Station_ID2 | OCTETSTRING(SIZE(6)), |
| | PAD | OCTETSTRING(SIZE(2)), |
| | InfoField_Length | OCTETSTRING(SIZE(2)), |
| | getrequest | ANY, |
| | --an attribute, attribute group, multiple attributes or groups-- | |
| | FCS | OCTETSTRING(SIZE(4)), |
| | ED | SYMBOL(SIZE(1)), |
| | FS_E | SYMBOL(SIZE(1)), |
| | FS_A | SYMBOL(SIZE(1)), |
| | FS_C | SYMBOL(SIZE(1)), |
| | FS_2 | SYMBOL(SIZE(0..4)) OPTIONAL, |
| | FS_T | SYMBOL(SIZE(1)) |
| | } | |



--`,,```,,,,````-`-`,,`,,`,`,,`---
Copyright International Organization for Standardization
Provided by IHS under license with ISO
No reproduction or networking permitted without license from IHS
Not for Resale

| ASN.1 PDU Type Definition | | |
|---|---|---|
| **PDU Name** : PMF_Frame2<br>**PCO Type** :<br>**Comments** : Parameter Management Frame (PMF) get response. | | |
| **Type Definition** | | |
| SEQUENCE | {SD | SYMBOL(SIZE(2)), |
| | FC | OCTETSTRING(SIZE(1)), |
| | DA | OCTETSTRING(SIZE(6)), |
| | SA | OCTETSTRING(SIZE(6)), |
| | Frame_Class | OCTETSTRING(SIZE(1)), |
| | Frame_Type | OCTETSTRING(SIZE(1)), |
| | Version_ID | OCTETSTRING(SIZE(2)), |
| | Transaction_ID | OCTETSTRING(SIZE(4)), |
| | Station_ID1 | OCTETSTRING(SIZE(2)), |
| | Station_ID2 | OCTETSTRING(SIZE(6)), |
| | PAD | OCTETSTRING(SIZE(2)), |
| | InfoField_Length | OCTETSTRING(SIZE(2)), |
| | getresponse | PMFResponse_Info, |
| | FCS | OCTETSTRING(SIZE(4)), |
| | ED | SYMBOL(SIZE(1)), |
| | FS_E | SYMBOL(SIZE(1)), |
| | FS_A | SYMBOL(SIZE(1)), |
| | FS_C | SYMBOL(SIZE(1)), |
| | FS_2 | SYMBOL(SIZE(0..4)) OPTIONAL, |
| | FS_T | SYMBOL(SIZE(1)) |
| | } | |



Copyright International Organization for Standardization
Provided by IHS under license with ISO
No reproduction or networking permitted without license from IHS
Not for Resale

| ASN.1 PDU Type Definition | | |
|---|---|---|
| **PDU Name** : PMF_Frame3<br>**PCO Type** :<br>**Comments** : Parameter Management Frame (PMF) set request. | | |
| **Type Definition** | | |
| SEQUENCE | {SD | SYMBOL(SIZE(2)), |
| | FC | OCTETSTRING(SIZE(1)), |
| | --NSA = '4F'H; SMT_Info = '41'H-- | |
| | DA | OCTETSTRING(SIZE(6)), |
| | SA | OCTETSTRING(SIZE(6)), |
| | Frame_Class | OCTETSTRING(SIZE(1)), |
| | Frame_Type | OCTETSTRING(SIZE(1)), |
| | Version_ID | OCTETSTRING(SIZE(2)), |
| | Transaction_ID | OCTETSTRING(SIZE(4)), |
| | Station_ID1 | OCTETSTRING(SIZE(2)), |
| | Station_ID2 | OCTETSTRING(SIZE(6)), |
| | PAD | OCTETSTRING(SIZE(2)), |
| | InfoField_Length | OCTETSTRING(SIZE(2)), |
| | setrequest | PMFRequest_Info, |
| | FCS | OCTETSTRING(SIZE(4)), |
| | ED | SYMBOL(SIZE(1)), |
| | FS_E | SYMBOL(SIZE(1)), |
| | FS_A | SYMBOL(SIZE(1)), |
| | FS_C | SYMBOL(SIZE(1)), |
| | FS_2 | SYMBOL(SIZE(0..4)) OPTIONAL, |
| | FS_T | SYMBOL(SIZE(1)) |
| | } | |



Copyright International Organization for Standardization
Provided by IHS under license with ISO
No reproduction or networking permitted without license from IHS
Not for Resale

| ASN.1 PDU Type Definition | | |
|---|---|---|
| **PDU Name** : PMF_Frame4<br>**PCO Type** :<br>**Comments** : Parameter Management Frame (PMF) set response. | | |
| **Type Definition** | | |
| SEQUENCE | {SD | SYMBOL(SIZE(2)), |
| | FC | OCTETSTRING(SIZE(1)), |
| | DA | OCTETSTRING(SIZE(6)), |
| | SA | OCTETSTRING(SIZE(6)), |
| | Frame_Class | OCTETSTRING(SIZE(1)), |
| | Frame_Type | OCTETSTRING(SIZE(1)), |
| | Version_ID | OCTETSTRING(SIZE(2)), |
| | Transaction_ID | OCTETSTRING(SIZE(4)), |
| | Station_ID1 | OCTETSTRING(SIZE(2)), |
| | Station_ID2 | OCTETSTRING(SIZE(6)), |
| | PAD | OCTETSTRING(SIZE(2)), |
| | InfoField_Length | OCTETSTRING(SIZE(2)), |
| | setresponse | PMFResponse_Info, |
| | FCS | OCTETSTRING(SIZE(4)), |
| | ED | SYMBOL(SIZE(1)), |
| | FS_E | SYMBOL(SIZE(1)), |
| | FS_A | SYMBOL(SIZE(1)), |
| | FS_C | SYMBOL(SIZE(1)), |
| | FS_2 | SYMBOL(SIZE(0..4)) OPTIONAL, |
| | FS_T | SYMBOL(SIZE(1)) |
| | } | |

### 10.2.9.4 LLC PDU Type Definition

| ASN.1 PDU Type Definition | | |
|---|---|---|
| **PDU Name** : LLC_Frame<br>**PCO Type** :<br>**Comments** : Logical Link Control frame (LLC). | | |
| **Type Definition** | | |
| SEQUENCE | {SD | SYMBOL(SIZE(2)), |
| | FC | OCTETSTRING(SIZE(1)), |
| | DA | OCTETSTRING(SIZE(6)), |
| | SA | OCTETSTRING(SIZE(6)), |
| | Info | OCTETSTRING[8], --LLC information-- |
| | FCS | OCTETSTRING(SIZE(4)), |
| | ED | SYMBOL(SIZE(1)), |
| | FS_E | SYMBOL(SIZE(1)), |
| | FS_A | SYMBOL(SIZE(1)), |
| | FS_C | SYMBOL(SIZE(1)), |
| | FS_2 | SYMBOL(SIZE(0..4)) OPTIONAL, |
| | FS_T | SYMBOL(SIZE(1)) |
| | } | |



Copyright International Organization for Standardization
Provided by IHS under license with ISO
No reproduction or networking permitted without license from IHS
Not for Resale

#### 10.2.9.5 Idle PDU Type Definition

| PDU Type Definition | | |
|---|---|---|
| **PDU Name** : ILS_FRM<br>**PCO Type** :<br>**Comments** : A frame contains idle symbols only. | | |
| **Field Name** | **Field Type** | **Comments** |
| ILS | SYMBOL[8] | Idle line state symbols. |

### 10.3 Constraint Parts

#### 10.3.1 ASN.1 Type Constraint Declaration for General Parameters

| ASN.1 Type Constraint Declaration | | |
|---|---|---|
| **Constraint Name** : UNA_UNKNOWN<br>**Structured Type** : UNA_GENERAL<br>**Derivation Path** :<br>**Comments** : General parameter. | | |
| **Constraint Value** | | |
| { Parameter_Type<br>Parameter_Length<br>PAD<br>UNA | ‘0001’H,<br>‘0008’H,<br>PAD_2,<br>SMT_Unknown_Address } | |

| ASN.1 Type Constraint Declaration |
|---|
| **Constraint Name** : UNA_IUT<br>**Structured Type** : UNA_GENERAL<br>**Derivation Path** : UNA_UNKNOWN<br>**Comments** : General parameter. |
| **Constraint Value** |
| REPLACE UNA BY IUT_ADDRESS |

| ASN.1 Type Constraint Declaration |
|---|
| **Constraint Name** : UNA_TSTR<br>**Structured Type** : UNA_GENERAL<br>**Derivation Path** : UNA_UNKNOWN<br>**Comments** : General parameter. |
| **Constraint Value** |
| REPLACE UNA BY TESTER_ADDRESS |


Copyright International Organization for Standardization
Provided by IHS under license with ISO
No reproduction or networking permitted without license from IHS Not for Resale

| ASN.1 Type Constraint Declaration | |
|---|---|
| **Constraint Name** | : StationDescriptor_Q |
| **Structured Type** | : StationDescriptor_GENERAL |
| **Derivation Path** | : |
| **Comments** | : General parameter. |

**Constraint Value**

```
{   Parameter_Type      '0002'H,
    Parameter_Length    '0004'H,
    Node_Class          ?,
    Mac_Ct              ?,
    NonMaster_Ct        ?,
    Master_Ct           ?       }
```

| ASN.1 Type Constraint Declaration | |
|---|---|
| **Constraint Name** | : StationDescriptor_IUT |
| **Structured Type** | : StationDescriptor_GENERAL |
| **Derivation Path** | : StationDescriptor_Q |
| **Comments** | : General parameter. |

**Constraint Value**

```
    REPLACE     Node_Class      BY      '00'H,    --IUT is a station--
    REPLACE     Mac_Ct          BY      IUT_MACs,
    REPLACE     NonMaster_Ct    BY      IUT_NonMasters,
    REPLACE     Mac_Ct          BY      IUT_Masters
```

| ASN.1 Type Constraint Declaration | |
|---|---|
| **Constraint Name** | : StationDescriptor_TSTR |
| **Structured Type** | : StationDescriptor_GENERAL |
| **Derivation Path** | : StationDescriptor_Q |
| **Comments** | : General parameter. |

**Constraint Value**

```
    REPLACE     Node_Class      BY      '00'H,    --Tester is a station--
```

| ASN.1 Type Constraint Declaration | |
|---|---|
| **Constraint Name** | : StationState_Q |
| **Structured Type** | : StationState_GENERAL |
| **Derivation Path** | : |
| **Comments** | : General parameter. |

**Constraint Value**

```
{   Parameter_Type          '0003'H,
    Parameter_Length        '0004'H,
    PAD                     PAD_2,
    Topology                Topology_Q,
    DuplAddress             DuplAddress_Q}
```



Copyright International Organization for Standardization
Provided by IHS under license with ISO
No reproduction or networking permitted without license from IHS
Not for Resale

| ASN.1 Type Constraint Declaration | | | |
|---|---|---|---|
| **Constraint Name** : StationState_TSTR | | | |
| **Structured Type** : StationState_GENERAL | | | |
| **Derivation Path** : StationState_Q | | | |
| **Comments** : General parameter. | | | |
| **Constraint Value** | | | |
| REPLACE | Topology | BY | Topology_05, |
| REPLACE | DuplAddress | BY | DuplAddress_R |

| ASN.1 Type Constraint Declaration | | | |
|---|---|---|---|
| **Constraint Name** : StationState_Dup | | | |
| **Structured Type** : StationState_GENERAL | | | |
| **Derivation Path** : StationState_Q | | | |
| **Comments** : General parameter. | | | |
| **Constraint Value** | | | |
| REPLACE | Topology | BY | Topology_05, |
| REPLACE | DuplAddress | BY | DuplAddress_S |

| ASN.1 Type Constraint Declaration | | |
|---|---|---|
| **Constraint Name** : ReasonCode_Q | | |
| **Structured Type** : ReasonCode_GENERAL | | |
| **Derivation Path** : | | |
| **Comments** : General parameter. | | |
| **Constraint Value** | | |
| { Parameter_Type | ‘0012’H, | |
| Parameter_Length | ‘0004’H, | |
| reason | ? | } |

| ASN.1 Type Constraint Declaration | | | | |
|---|---|---|---|---|
| **Constraint Name** : ReasonCode_03 | | | | |
| **Structured Type** : ReasonCode_GENERAL | | | | |
| **Derivation Path** : Reason_Code_Q | | | | |
| **Comments** : General parameter. | | | | |
| **Constraint Value** | | | | |
| REPLACE | reason | BY | ‘00000003’H | --success-- |


Copyright International Organization for Standardization
Provided by IHS under license with ISO
No reproduction or networking permitted without license from IHS
Not for Resale

| ASN.1 Type Constraint Declaration | | |
|---|---|---|
| **Constraint Name** | : | Authorization_Req |
| **Structured Type** | : | Authorization_GENERAL |
| **Derivation Path** | : | |
| **Comments** | : | General parameter. This parameter is optional. |

| Constraint Value | | |
|---|---|---|
| { | Parameter_Type | ‘0021’H, |
| | Parameter_Length | OMIT, |
| | Authorization | OMIT } |

### 10.3.2 ASN.1 Type Constraint for MIB Attributes

| ASN.1 Type Constraint Declaration | | |
|---|---|---|
| **Constraint Name** | : | MIBGrp_Req |
| **Structured Type** | : | MIBGrp |
| **Derivation Path** | : | |
| **Comments** | : | MIB attribute groups. |

| Constraint Value | | | |
|---|---|---|---|
| { | smtstationidgrp | SMTGrp1_Req, | |
| | smtstationconfiggrp | SMTGrp2_Req, | |
| | smtstatusgrp | SMTGrp3_Req | |
| | smtmiboperationgrp | SMTGrp4_Req, | |
| | maccapabilitiesgrp | MACGrp1_Req, | |
| | macconfiggrp | MACGrp2_Req, | |
| | macaddressgrp | MACGrp3_Req, | |
| | macoperationgrp | MACGrp4_Req, | |
| | maccountersgrp | MACGrp5_Req, | |
| | macframeerrorconditiongrp | MACGrp6_Req, | |
| | macnotcopiedconditiongrp | MACGrp7_Req, | --optional-- |
| | macstatusgrp | MACGrp8_Req, | |
| | pathconfiggrp | PATHGrp_Req | |
| | portconfiggrp | PORTGrp1_Req, | |
| | portoperationgrp | PORTGrp2_Req, | |
| | porterrorctrsgrp | PORTGrp3_Req, | |
| | portlergrp | PORTGrp4_Req, | |
| | portstatusgrp | PORTGrp5_Req | } |



Copyright International Organization for Standardization
Provided by IHS under license with ISO
No reproduction or networking permitted without license from IHS
Not for Resale

| ASN.1 Type Constraint Declaration | | |
|---|---|---|
| **Constraint Name** : MIBGrp_Resp<br>**Structured Type** : MIBGrp<br>**Derivation Path** :<br>**Comments** : MIB attribute groups. | | |
| **Constraint Value** | | |
| { | smtstationidgrp | SMTGrp1_Resp, |
| | smtstationconfiggrp | SMTGrp2_Resp, |
| | smtstatusgrp | SMTGrp3_Resp |
| | smtmiboperationgrp | SMTGrp4_Resp, |
| | maccapabilitiesgrp | MACGrp1_Resp, |
| | macconfiggrp | MACGrp2_Resp, |
| | macaddressgrp | MACGrp3_Resp, |
| | macoperationgrp | MACGrp4_Resp, |
| | maccountersgrp | MACGrp5_Resp, |
| | macframeerrorconditiongrp | MACGrp6_Resp, |
| | macnotcopiedconditiongrp | MACGrp7_Resp, --optional-- |
| | macstatusgrp | MACGrp8_Resp, |
| | pathconfiggrp | PATHGrp_Resp |
| | portconfiggrp | PORTGrp1_Resp, |
| | portoperationgrp | PORTGrp2_Resp, |
| | porterrorctrsgrp | PORTGrp3_Resp, |
| | portlergrp | PORTGrp4_Resp, |
| | portstatusgrp | PORTGrp5_Resp } |

### 10.3.2.1 ASN.1 Type Constraint for SMT Attributes

| ASN.1 Type Constraint Declaration | | |
|---|---|---|
| **Constraint Name** : SMTGrp1_Req<br>**Structured Type** : SMTGrp<br>**Derivation Path** :<br>**Comments** : fddiSMTStationIdGrp. | | |
| **Constraint Value** | | |
| { | Parameter_Type | ‘100A’H, |
| | Parameter_Length | OMIT, |
| | Parameter_Value | OMIT } |

| ASN.1 Type Constraint Declaration | | | |
|---|---|---|---|
| **Constraint Name** : SMTGrp2_Req<br>**Structured Type** : SMTGrp<br>**Derivation Path** : SMTGrp1_Req<br>**Comments** : fddiSMTStationConfigGrp. | | | |
| **Constraint Value** | | | |
| REPLACE | Parameter_Type | BY | ‘1014’H |



Copyright International Organization for Standardization
Provided by IHS under license with ISO
No reproduction or networking permitted without license from IHS
Not for Resale

| ASN.1 Type Constraint Declaration | | | |
|---|---|---|---|
| **Constraint Name** : SMTGrp3_Req<br>**Structured Type** : SMTGrp<br>**Derivation Path** : SMTGrp1_Req<br>**Comments** : fddiSMTStatusGrp. | | | |
| **Constraint Value** | | | |
| REPLACE | Parameter_Type | BY | ‘1028’H |

| ASN.1 Type Constraint Declaration | | | |
|---|---|---|---|
| **Constraint Name** : SMTGrp4_Req<br>**Structured Type** : SMTGrp<br>**Derivation Path** : SMTGrp1_Req<br>**Comments** : fddiSMTMIBOperationGrp. | | | |
| **Constraint Value** | | | |
| REPLACE | Parameter_Type | BY | ‘1032’H |

| ASN.1 Type Constraint Declaration | | |
|---|---|---|
| **Constraint Name** : SMTGrp1_Resp<br>**Structured Type** : SMTGrp<br>**Derivation Path** :<br>**Comments** : fddiSMTStationIdGrp. | | |
| **Constraint Value** | | |
| { | Parameter_Type | ‘100A’H, |
| | Parameter_Length | ?, |
| | Parameter_Value | SMTStationIdGrp_Resp } |

| ASN.1 Type Constraint Declaration | | |
|---|---|---|
| **Constraint Name** : SMTGrp2_Resp<br>**Structured Type** : SMTGrp<br>**Derivation Path** :<br>**Comments** : fddiSMTStationConfigGrp. | | |
| **Constraint Value** | | |
| { | Parameter_Type | ‘1014’H, |
| | Parameter_Length | ?, |
| | Parameter_Value | SMTStationConfigGrp_Resp } |



Copyright International Organization for Standardization
Provided by IHS under license with ISO
No reproduction or networking permitted without license from IHS
Not for Resale

| ASN.1 Type Constraint Declaration | |
|---|---|
| **Constraint Name** | : SMTGrp3_Resp |
| **Structured Type** | : SMTGrp |
| **Derivation Path** | : |
| **Comments** | : fddiSMTStatusGrp. |

| Constraint Value | | |
|---|---|---|
| { | Parameter_Type | '1028'H, |
| | Parameter_Length | ?, |
| | Parameter_Value | SMTStatusGrp_Resp } |

| **ASN.1 Type Constraint Declaration** | |
|---|---|
| **Constraint Name** | : SMTGrp4_Resp |
| **Structured Type** | : SMTGrp |
| **Derivation Path** | : |
| **Comments** | : fddiSMTMIBOperationGrp. |

| **Constraint Value** | | |
|---|---|---|
| { | Parameter_Type | '1032'H, |
| | Parameter_Length | ?, |
| | Parameter_Value | SMTMIBOperationGrp_Resp } |

#### 10.3.2.1.1 SMT Station ID Group Attributes Constraints

| **ASN.1 Type Constraint Declaration** | |
|---|---|
| **Constraint Name** | : SMTStationIdGrp_Resp |
| **Structured Type** | : SMTStationIdGrp |
| **Derivation Path** | : |
| **Comments** | : SMT attribute group. |

| **Constraint Value** | | | |
|---|---|---|---|
| { | stationid | SMTStationId_Resp, | |
| | opversionid | SMTOpVersionId_Resp, | |
| | hiversionid | SMTHiVersionId_Resp, | |
| | loversionid | SMTLoVersionId_Resp, | |
| | manufacturerdata | SMTManufacturerData_Resp, | -- optional-- |
| | userdata | SMTUserData_Resp, | |
| | mibversionid | SMTMIBVersionId_Resp } | |


Copyright International Organization for Standardization
Provided by IHS under license with ISO
No reproduction or networking permitted without license from IHS
Not for Resale

| ASN.1 Type Constraint Declaration | | |
|---|---|---|
| **Constraint Name** : SMTStationId_Req<br>**Structured Type** : SMTStationId<br>**Derivation Path** :<br>**Comments** : SMT attribute. | | |
| **Constraint Value** | | |
| { | Parameter_Type | ‘100B’H, |
| | Parameter_Length | ‘0008’H, |
| | ImplementerOctet | OMIT, |
| | Station_Address | OMIT } |

| ASN.1 Type Constraint Declaration | | |
|---|---|---|
| **Constraint Name** : SMTStationId_Resp<br>**Structured Type** : SMTStationId<br>**Derivation Path** :<br>**Comments** : SMT attribute. | | |
| **Constraint Value** | | |
| { | Parameter_Type | ‘100B’H, |
| | Parameter_Length | ‘0008’H, |
| | ImplementerOctet | ‘0000’H, |
| | Station_Address | IUT_ADDRESS } |

| ASN.1 Type Constraint Declaration | | |
|---|---|---|
| **Constraint Name** : SMTOpVersionId_Resp<br>**Structured Type** : SMTOpVersionId<br>**Derivation Path** :<br>**Comments** : SMT attribute. | | |
| **Constraint Value** | | |
| { | Parameter_Type | ‘100D’H, |
| | Parameter_Length | ‘0004’H, |
| | PAD2 | PAD_2, |
| | OpVersionId | ‘0002’H } |

| ASN.1 Type Constraint Declaration | | |
|---|---|---|
| **Constraint Name** : SMTHiVersionId_Resp<br>**Structured Type** : SMTHiVersionId<br>**Derivation Path** :<br>**Comments** : SMT attribute. | | |
| **Constraint Value** | | |
| { | Parameter_Type | ‘100E’H, |
| | Parameter_Length | ‘0004’H, |
| | PAD2 | PAD_2, |
| | HiVersionId | ‘0002’H } |



Copyright International Organization for Standardization
Provided by IHS under license with ISO
No reproduction or networking permitted without license from IHS
Not for Resale

| ASN.1 Type Constraint Declaration | | |
|---|---|---|
| **Constraint Name** | : | SMTLoVersionId_Resp |
| **Structured Type** | : | SMTLoVersionId |
| **Derivation Path** | : | |
| **Comments** | : | SMT attribute. |

| Constraint Value | | |
|---|---|---|
| { | Parameter_Type | ‘100F’H, |
| | Parameter_Length | ‘0004’H, |
| | PAD2 | PAD_2, |
| | LoVersionId | ‘0001’H } |

| ASN.1 Type Constraint Declaration | | |
|---|---|---|
| **Constraint Name** | : | SMTManufacturerData_Req |
| **Structured Type** | : | SMTManufacturerData |
| **Derivation Path** | : | |
| **Comments** | : | SMT attribute. This attribute is optional. |

| Constraint Value | | |
|---|---|---|
| { | Parameter_Type | ‘1010’H, |
| | Parameter_Length | ‘0020’H, |
| | ManufacturerOUI | OMIT, |
| | ManufacturerData | OMIT } |

| ASN.1 Type Constraint Declaration | | |
|---|---|---|
| **Constraint Name** | : | SMTManufacturerData_Resp |
| **Structured Type** | : | SMTManufacturerData |
| **Derivation Path** | : | |
| **Comments** | : | SMT attribute. This attribute is optional. |

| Constraint Value | | |
|---|---|---|
| { | Parameter_Type | ‘1010’H, |
| | Parameter_Length | ‘0020’H, |
| | ManufacturerOUI | *, |
| | ManufacturerData | * } |

| ASN.1 Type Constraint Declaration | | |
|---|---|---|
| **Constraint Name** | : | SMTManufacturerData_IUT |
| **Structured Type** | : | SMTManufacturerData |
| **Derivation Path** | : | SMTManufacturerData_Resp |
| **Comments** | : | SMT attribute. This attribute is optional. |

| Constraint Value | | | |
|---|---|---|---|
| REPLACE | ManufacturerOUI | BY | MANUF_OUI, |
| REPLACE | ManufacturerData | BY | MANUF_DATA } |



Copyright International Organization for Standardization
Provided by IHS under license with ISO
No reproduction or networking permitted without license from IHS
Not for Resale

| ASN.1 Type Constraint Declaration | |
|---|---|
| **Constraint Name** | : SMTUserData_Req |
| **Structured Type** | : SMTUserData |
| **Derivation Path** | : |
| **Comments** | : SMT attribute. |

**Constraint Value**

```
{       Parameter_Type          ‘1011’H,
        Parameter_Length        ‘0020’H,
        UserData                OMIT
          --an ASCII string of 32 octets in length--        }
```

| ASN.1 Type Constraint Declaration | |
|---|---|
| **Constraint Name** | : SMTUserData_Resp |
| **Structured Type** | : SMTUserData |
| **Derivation Path** | : |
| **Comments** | : SMT attribute. |

**Constraint Value**

```
{       Parameter_Type          ‘1011’H,
        Parameter_Length        ‘0020’H,
        UserData                ?       }
```

| ASN.1 Type Constraint Declaration | |
|---|---|
| **Constraint Name** | : SMTUserData_IUT |
| **Structured Type** | : SMTUserData |
| **Derivation Path** | : SMTUserData_Resp |
| **Comments** | : SMT attribute. |

**Constraint Value**

```
REPLACE     UserData            BY      USR_DATA(32)
        --an ASCII string of 32 octets in length--
```

| ASN.1 Type Constraint Declaration | |
|---|---|
| **Constraint Name** | : SMTMIBVersionId_Req |
| **Structured Type** | : SMTMIBVersionId |
| **Derivation Path** | : |
| **Comments** | : SMT attribute. |

**Constraint Value**

```
{       Parameter_Type      ‘1012’H,
        Parameter_Length    ‘0004’H,
        PAD2                OMIT,
        MIBVersionId        OMIT    }
```



Copyright International Organization for Standardization
Provided by IHS under license with ISO
No reproduction or networking permitted without license from IHS
Not for Resale

| ASN.1 Type Constraint Declaration | |
|---|---|
| **Constraint Name** | : SMTMIBVersionId_Resp |
| **Structured Type** | : SMTMIBVersionId |
| **Derivation Path** | : |
| **Comments** | : SMT attribute. |

| Constraint Value | | |
|---|---|---|
| { | Parameter_Type | ‘1012’H, |
| | Parameter_Length | ‘0004’H, |
| | PAD2 | PAD_2, |
| | MIBVersionId | ? } |

| ASN.1 Type Constraint Declaration | |
|---|---|
| **Constraint Name** | : SMTMIBVersionId_IUT |
| **Structured Type** | : SMTMIBVersionId |
| **Derivation Path** | : SMTMIBVersionId_Resp |
| **Comments** | : SMT attribute. |

| Constraint Value | | | |
|---|---|---|---|
| REPLACE | MIBVersionId | BY | ‘0001’H } |

### 10.3.2.1.2 SMT Station Configuration Group Attributes Constraints

| ASN.1 Type Constraint Declaration | |
|---|---|
| **Constraint Name** | : SMTStationConfigGrp_Resp |
| **Structured Type** | : SMTStationConfigGrp |
| **Derivation Path** | : |
| **Comments** | : SMT attribute group. |

| Constraint Value | | |
|---|---|---|
| { | macct | SMTMac_Ct_Resp, |
| | nonmasterct | SMTNonMaster_Ct_Resp, |
| | masterct | SMTMaster_Ct_Resp, |
| | availablepaths | SMTAvailablePaths_Resp, |
| | configcapabilities | SMTConfigCapabilities_Resp, |
| | configpolicy | SMTConfigPolicy_Resp, |
| | connectionpolicy | SMTConnectionPolicy_Resp, |
| | tnotify | SMTT_Notify_Resp, |
| | statrptpolicy | SMTStatRptPolicy_Resp, |
| | tracemaxexpiration | SMTTrace_MaxExpiration_Resp, |
| | portindexes | SMTPORTIndexes_Resp, |
| | macindexes | SMTMACIndexes_Resp, |
| | bypasspresent | SMTBypassPresent_Resp } |



Copyright International Organization for Standardization
Provided by IHS under license with ISO
No reproduction or networking permitted without license from IHS
Not for Resale

| ASN.1 Type Constraint Declaration | | |
|---|---|---|
| **Constraint Name** : SMTMac_Ct_Req<br>**Structured Type** : SMTMac_Ct<br>**Derivation Path** :<br>**Comments** : SMT attribute. | | |
| **Constraint Value** | | |
| { | Parameter_Type | ‘1015’H, |
| | Parameter_Length | ‘0004’H, |
| | PAD3 | OMIT, |
| | MAC_Ct | OMIT } |

| ASN.1 Type Constraint Declaration | | |
|---|---|---|
| **Constraint Name** : SMTMac_Ct_Resp<br>**Structured Type** : SMTMac_Ct<br>**Derivation Path** :<br>**Comments** : SMT attribute. | | |
| **Constraint Value** | | |
| { | Parameter_Type | ‘1015’H, |
| | Parameter_Length | ‘0004’H, |
| | PAD3 | PAD_3, |
| | MAC_Ct | ? } |

| ASN.1 Type Constraint Declaration | | | |
|---|---|---|---|
| **Constraint Name** : SMTMac_Ct_IUT<br>**Structured Type** : SMTMac_Ct<br>**Derivation Path** : SMTMac_Ct_Resp<br>**Comments** : SMT attribute. | | | |
| **Constraint Value** | | | |
| REPLACE | MAC_Ct | BY | IUT_MACs |

| ASN.1 Type Constraint Declaration | | |
|---|---|---|
| **Constraint Name** : SMTNonMaster_Ct_Req<br>**Structured Type** : SMTNonMaster_Ct<br>**Derivation Path** :<br>**Comments** : SMT attribute. | | |
| **Constraint Value** | | |
| { | Parameter_Type | ‘1016’H, |
| | Parameter_Length | ‘0004’H, |
| | PAD3 | OMIT, |
| | NonMaster_Ct | OMIT } |



Copyright International Organization for Standardization
Provided by IHS under license with ISO
No reproduction or networking permitted without license from IHS
Not for Resale

| ASN.1 Type Constraint Declaration | | |
|---|---|---|
| **Constraint Name** : SMTNonMaster_Ct_Resp<br>**Structured Type** : SMTNonMaster_Ct<br>**Derivation Path** :<br>**Comments** : SMT attribute. | | |
| **Constraint Value** | | |
| { | Parameter_Type | ‘1016’H, |
| | Parameter_Length | ‘0004’H, |
| | PAD3 | PAD_3, |
| | NonMaster_Ct | ? } |

| ASN.1 Type Constraint Declaration | | | |
|---|---|---|---|
| **Constraint Name** : SMTNonMaster_Ct_IUT<br>**Structured Type** : SMTNonMaster_Ct<br>**Derivation Path** : SMTNonMaster_Ct_Resp<br>**Comments** : SMT attribute. | | | |
| **Constraint Value** | | | |
| REPLACE | NonMaster_Ct | BY | IUT_NonMasters |

| ASN.1 Type Constraint Declaration | | |
|---|---|---|
| **Constraint Name** : SMTMaster_Ct_Req<br>**Structured Type** : SMTMaster_Ct<br>**Derivation Path** :<br>**Comments** : SMT attribute. | | |
| **Constraint Value** | | |
| { | Parameter_Type | ‘1017’H, |
| | Parameter_Length | ‘0004’H, |
| | PAD3 | OMIT, |
| | Master_Ct | OMIT } |

| ASN.1 Type Constraint Declaration | | |
|---|---|---|
| **Constraint Name** : SMTMaster_Ct_Resp<br>**Structured Type** : SMTMaster_Ct<br>**Derivation Path** :<br>**Comments** : SMT attribute. | | |
| **Constraint Value** | | |
| { | Parameter_Type | ‘1017’H, |
| | Parameter_Length | ‘0004’H, |
| | PAD3 | PAD_3, |
| | Master_Ct | ? } |


Copyright International Organization for Standardization
Provided by IHS under license with ISO
No reproduction or networking permitted without license from IHS
Not for Resale

| ASN.1 Type Constraint Declaration | | | |
|---|---|---|---|
| **Constraint Name** : SMTMaster_Ct_IUT<br>**Structured Type** : SMTMaster_Ct<br>**Derivation Path** : SMTMaster_Ct_Resp<br>**Comments** : SMT attribute. | | | |
| **Constraint Value** | | | |
| REPLACE | Master_Ct | BY | IUT_Masters |

| ASN.1 Type Constraint Declaration | | |
|---|---|---|
| **Constraint Name** : SMTAvailablePaths_Req<br>**Structured Type** : SMTAvailablePaths<br>**Derivation Path** :<br>**Comments** : SMT attribute. | | |
| **Constraint Value** | | |
| { | Parameter_Type | ‘1018’H, |
| | Parameter_Length | ‘0004’H, |
| | PAD3 | OMIT, |
| | AvailablePaths | OMIT } |



Copyright International Organization for Standardization
Provided by IHS under license with ISO
No reproduction or networking permitted without license from IHS
Not for Resale

| ASN.1 Type Constraint Declaration | | |
|---|---|---|
| **Constraint Name** : SMTAvailablePaths_Resp<br>**Structured Type** : SMTAvailablePaths<br>**Derivation Path** :<br>**Comments** : SMT attribute. | | |
| **Constraint Value** | | |
| { | Parameter_Type | ‘1018’H, |
| | Parameter_Length | ‘0004’H, |
| | PAD3 | PAD_3, |
| | AvailablePaths | AvailablePaths_Q } |

| ASN.1 Type Constraint Declaration | | | |
|---|---|---|---|
| **Constraint Name** : SMTAvailablePaths_IUT<br>**Structured Type** : SMTAvailablePaths<br>**Derivation Path** : SMTAvailablePaths_Resp<br>**Comments** : SMT attribute. | | | |
| **Constraint Value** | | | |
| REPLACE | AvailablePaths | BY | AvailablePaths_IUT |

| ASN.1 Type Constraint Declaration | | |
|---|---|---|
| **Constraint Name** : SMTConfigCapabilities_Req<br>**Structured Type** : SMTConfigCapabilities<br>**Derivation Path** :<br>**Comments** : SMT attribute. | | |
| **Constraint Value** | | |
| { | Parameter_Type | ‘1019’H, |
| | Parameter_Length | ‘0004’H, |
| | PAD2 | OMIT, |
| | ConfigCapabilities | OMIT } |

| ASN.1 Type Constraint Declaration | | |
|---|---|---|
| **Constraint Name** : SMTConfigCapabilities_Resp<br>**Structured Type** : SMTConfigCapabilities<br>**Derivation Path** :<br>**Comments** : SMT attribute. | | |
| **Constraint Value** | | |
| { | Parameter_Type | ‘1019’H, |
| | Parameter_Length | ‘0004’H, |
| | PAD2 | PAD_2, |
| | ConfigCapabilities | Capabilities_Q } |


Copyright International Organization for Standardization
Provided by IHS under license with ISO
No reproduction or networking permitted without license from IHS
Not for Resale

| ASN.1 Type Constraint Declaration | |
|---|---|
| **Constraint Name** | : SMTConfigCapabilities_IUT |
| **Structured Type** | : SMTConfigCapabilities |
| **Derivation Path** | : SMTConfigCapabilities_Resp |
| **Comments** | : SMT attribute. |
| **Constraint Value** | |
| REPLACE ConfigCapabilities BY Capabilities_IUT | |

| ASN.1 Type Constraint Declaration | |
|---|---|
| **Constraint Name** | : SMTConfigCapabilities_IUT1 |
| **Structured Type** | : SMTConfigCapabilities |
| **Derivation Path** | : SMTConfigcapabilities_Resp |
| **Comments** | : SMT attribute. |
| **Constraint Value** | |
| REPLACE ConfigCapabilities BY Capabilities_H | |

| ASN.1 Type Constraint Declaration | |
|---|---|
| **Constraint Name** | : SMTConfigCapabilities_IUT2 |
| **Structured Type** | : SMTConfigCapabilities |
| **Derivation Path** | : SMTConfigcapabilities_Resp |
| **Comments** | : SMT attribute. |
| **Constraint Value** | |
| REPLACE ConfigCapabilities BY Capabilities_W | |

| ASN.1 Type Constraint Declaration | |
|---|---|
| **Constraint Name** | : SMTConfigPolicy_Resp |
| **Structured Type** | : SMTConfigPolicy |
| **Derivation Path** | : |
| **Comments** | : SMT attribute. |
| **Constraint Value** | |
| { Parameter_Type ‘101A’H,<br>Parameter_Length ‘0004’H,<br>PAD2 PAD_2,<br>ConfigPolicy ConfigPolicy_Q } | |



Copyright International Organization for Standardization
Provided by IHS under license with ISO
No reproduction or networking permitted without license from IHS
Not for Resale

| ASN.1 Type Constraint Declaration | | |
|---|---|---|
| **Constraint Name** | : | SMTConnectionPolicy_Req |
| **Structured Type** | : | SMTConnectionPolicy |
| **Derivation Path** | : | |
| **Comments** | : | SMT attribute. |

| Constraint Value | | |
|---|---|---|
| { | Parameter_Type | ‘101B’H, |
| | Parameter_Length | ‘0004’H, |
| | PAD2 | OMIT, |
| | ConnectionPolicy | OMIT } |

| ASN.1 Type Constraint Declaration | | |
|---|---|---|
| **Constraint Name** | : | SMTConnectionPolicy_Resp |
| **Structured Type** | : | SMTConnectionPolicy |
| **Derivation Path** | : | |
| **Comments** | : | SMT attribute. |

| Constraint Value | | |
|---|---|---|
| { | Parameter_Type | ‘101B’H, |
| | Parameter_Length | ‘0004’H, |
| | PAD2 | PAD_2, |
| | ConnectionPolicy | Connection_Q } |

| ASN.1 Type Constraint Declaration | | |
|---|---|---|
| **Constraint Name** | : | SMTConnectionPolicy_IUT |
| **Structured Type** | : | SMTConnectionPolicy |
| **Derivation Path** | : | SMTConnectionPolicy_Resp |
| **Comments** | : | SMT attribute. |

| Constraint Value | | | |
|---|---|---|---|
| REPLACE | ConnectionPolicy | BY | Connection_IUT |

| ASN.1 Type Constraint Declaration | | |
|---|---|---|
| **Constraint Name** | : | SMTConnectionPolicy_Test |
| **Structured Type** | : | SMTConnectionPolicy |
| **Derivation Path** | : | SMTConnectionPolicy_Resp |
| **Comments** | : | SMT attribute. |

| Constraint Value | | | |
|---|---|---|---|
| REPLACE | ConnectionPolicy | BY | Connection_Test |


Copyright International Organization for Standardization
Provided by IHS under license with ISO
No reproduction or networking permitted without license from IHS
Not for Resale

| ASN.1 Type Constraint Declaration | |
|---|---|
| **Constraint Name** | : SMTT_Notify_Req |
| **Structured Type** | : SMTT_Notify |
| **Derivation Path** | : |
| **Comments** | : SMT attribute. |

**Constraint Value**

```
{       Parameter_Type      '101D'H,
        Parameter_Length    '0004'H,
        PAD2                OMIT,
        T_NotifyType        OMIT    }
```

| ASN.1 Type Constraint Declaration | |
|---|---|
| **Constraint Name** | : SMTT_Notify_Resp |
| **Structured Type** | : SMTT_Notify |
| **Derivation Path** | : |
| **Comments** | : SMT attribute. |

**Constraint Value**

```
{       Parameter_Type      '101D'H,
        Parameter_Length    '0004'H,
        PAD2                PAD_2,
        T_NotifyType        T_Notify        }
```

| ASN.1 Type Constraint Declaration | |
|---|---|
| **Constraint Name** | : SMTT_Notify_Test |
| **Structured Type** | : SMTT_Notify |
| **Derivation Path** | : SMTT_Notify_Resp |
| **Comments** | : SMT attribute. |

**Constraint Value**

```
REPLACE     T_NotifyType    BY      '0014'H
--Assume 20 seconds is the desired T_Notify requested by Tester's PMF set request frame.  Note:  Any
desired T_Notify within a range of 2 seconds to 30 seconds is acceptable.--
```

| ASN.1 Type Constraint Declaration | |
|---|---|
| **Constraint Name** | : SMTStatRptPolicy_Req |
| **Structured Type** | : SMTStatRptPolicy |
| **Derivation Path** | : |
| **Comments** | : SMT attribute. |

**Constraint Value**

```
{       Parameter_Type      '101E'H,
        Parameter_Length    '0004'H,
        PAD3                OMIT,
        StatRptPolicy       OMIT    }
```



Copyright International Organization for Standardization
Provided by IHS under license with ISO
No reproduction or networking permitted without license from IHS
Not for Resale

| ASN.1 Type Constraint Declaration | |
|---|---|
| **Constraint Name** | : SMTStatRptPolicy_Resp |
| **Structured Type** | : SMTStatRptPolicy |
| **Derivation Path** | : |
| **Comments** | : SMT attribute. |

**Constraint Value**

```
{       Parameter_Type          ‘101E’H,
        Parameter_Length        ‘0004’H,
        PAD3                    PAD_3,
        StatRptPolicy           TRUE   }
```

| ASN.1 Type Constraint Declaration | |
|---|---|
| **Constraint Name** | : SMTStatRptPolicy_Test |
| **Structured Type** | : SMTStatRptPolicy |
| **Derivation Path** | : SMTStatRptPolicy_Resp |
| **Comments** | : SMT attribute. |

**Constraint Value**

REPLACE StatRptPolicy BY FALSE

| ASN.1 Type Constraint Declaration | |
|---|---|
| **Constraint Name** | : SMTTrace_MaxExpiration_Req |
| **Structured Type** | : SMTTrace_MaxExpiration |
| **Derivation Path** | : |
| **Comments** | : SMT attribute. |

**Constraint Value**

```
{       Parameter_Type          ‘101F’H,
        Parameter_Length        ‘0004’H,
        Trace_MaxExpiration     OMIT   }
```

| ASN.1 Type Constraint Declaration | |
|---|---|
| **Constraint Name** | : SMTTrace_MaxExpiration_Resp |
| **Structured Type** | : SMTTrace_MaxExpiration |
| **Derivation Path** | : |
| **Comments** | : SMT attribute. |

**Constraint Value**

```
{       Parameter_Type          ‘101F’H,
        Parameter_Length        ‘0004’H,
        Trace_MaxExpiration     ?       }
```



--`,,```,,,,````-`-`,,`,,`,`,,`---
Copyright International Organization for Standardization
Provided by IHS under license with ISO
No reproduction or networking permitted without license from IHS
Not for Resale

| ASN.1 Type Constraint Declaration | |
|---|---|
| **Constraint Name** | : SMTTrace_MaxExpiration_IUT |
| **Structured Type** | : SMTTrace_MaxExpiration |
| **Derivation Path** | : SMTTrace_MaxExpiration_Resp |
| **Comments** | : SMT attribute. |
| **Constraint Value** | |
| REPLACE Trace_MaxExpiration BY TIME(Trace_Max) | |

| ASN.1 Type Constraint Declaration | |
|---|---|
| **Constraint Name** | : SMTTrace_MaxExpiration_Test |
| **Structured Type** | : SMTTrace_MaxExpiration |
| **Derivation Path** | : SMTTrace_MaxExpiration_Resp |
| **Comments** | : SMT attribute. |
| **Constraint Value** | |
| REPLACE Trace_MaxExpiration BY TIME(7500)<br>--Assume 7.5 seconds is the desired Trace_Max requested by tester's PMF set request frame.--<br>--Note: Any desired Trace_max >=6.001773 seconds is acceptable.-- | |

| ASN.1 Type Constraint Declaration | |
|---|---|
| **Constraint Name** | : SMTPORTIndexes_Resp |
| **Structured Type** | : SMTPORTIndexes |
| **Derivation Path** | : |
| **Comments** | : SMT attribute. |
| **Constraint Value** | |
| { Parameter_Type ‘1020’H,<br>Parameter_Length ‘0004’H,<br>PORTIndexes SMTPORTIndx } | |

| ASN.1 Type Constraint Declaration | |
|---|---|
| **Constraint Name** | : SMTMACIndexes_Resp |
| **Structured Type** | : SMTMACIndexes |
| **Derivation Path** | : |
| **Comments** | : SMT attribute. |
| **Constraint Value** | |
| { Parameter_Type ‘1021’H,<br>Parameter_Length ‘0004’H,<br>MACIndexes SMTMACIndx } | |



Copyright International Organization for Standardization
Provided by IHS under license with ISO
No reproduction or networking permitted without license from IHS
Not for Resale

| ASN.1 Type Constraint Declaration | |
|---|---|
| **Constraint Name** | : SMTBypassPresent_Resp |
| **Structured Type** | : SMTBypassPresent |
| **Derivation Path** | : |
| **Comments** | : SMT attribute. |

| Constraint Value | | |
|---|---|---|
| { | Parameter_Type | ‘1022’H, |
| | Parameter_Length | ‘0004’H, |
| | PAD3 | PAD_3, |
| | BypassPresent | ? } |

### 10.3.2.1.3 SMT Status Group Attribures Constraints

| ASN.1 Type Constraint Declaration | |
|---|---|
| **Constraint Name** | : SMTStatusGrp_Resp |
| **Structured Type** | : SMTStatusGrp |
| **Derivation Path** | : |
| **Comments** | : SMT attributegroup. |

| Constraint Value | | |
|---|---|---|
| { | ecmstate | SMTECMState_Resp, |
| | cfstate | SMTCF_State_Resp, |
| | holdstate | SMTHoldState_Resp, --optional-- |
| | remotedisconnectflag | SMTRemoteDisconnectFlag_Resp, |
| | stationstatus | SMTStationStatus_Resp, |
| | peerwrapflag | SMTPeerWrapFlag_Resp } |

| ASN.1 Type Constraint Declaration | |
|---|---|
| **Constraint Name** | : SMTECMState_Resp |
| **Structured Type** | : SMTECMState |
| **Derivation Path** | : |
| **Comments** | : SMT attribute. |

| Constraint Value | | |
|---|---|---|
| { | Parameter_Type | ‘1029’H, |
| | Parameter_Length | ‘0004’H, |
| | PAD2 | PAD_2, |
| | ECMStateType | ECMState_Q } |

| ASN.1 Type Constraint Declaration | |
|---|---|
| **Constraint Name** | : SMTCF_State_Req |
| **Structured Type** | : SMTCF_State |
| **Derivation Path** | : |
| **Comments** | : SMT attribute. |

| Constraint Value | | |
|---|---|---|
| { | Parameter_Type | ‘102A’H, |
| | Parameter_Length | ‘0004’H, |
| | PAD2 | OMIT, |
| | CF_StateType | OMIT } |


Copyright International Organization for Standardization
Provided by IHS under license with ISO
No reproduction or networking permitted without license from IHS Not for Resale

| ASN.1 Type Constraint Declaration | |
|---|---|
| **Constraint Name** | : SMTCF_State_Resp |
| **Structured Type** | : SMTCF_State |
| **Derivation Path** | : |
| **Comments** | : SMT attribute. |

**Constraint Value**

```
{       Parameter_Type      ‘102A’H,
        Parameter_Length    ‘0004’H,
        PAD2                PAD_2,
        CF_StateType        CF_State_Q    }
```

| ASN.1 Type Constraint Declaration | |
|---|---|
| **Constraint Name** | : SMTCF_State_Thru |
| **Structured Type** | : SMTCF_State |
| **Derivation Path** | : SMTCF_State_Resp |
| **Comments** | : SMT attribute. |

**Constraint Value**

REPLACE CF_StateType BY CF_State_Thru

| ASN.1 Type Constraint Declaration | |
|---|---|
| **Constraint Name** | : SMTCF_State_Cwrpa |
| **Structured Type** | : SMTCF_State |
| **Derivation Path** | : SMTCF_State_Resp |
| **Comments** | : SMT attribute. |

**Constraint Value**

REPLACE CF_StateType BY CF_State_Cwrpa

| ASN.1 Type Constraint Declaration | |
|---|---|
| **Constraint Name** | : SMTCF_State_Cwrpb |
| **Structured Type** | : SMTCF_State |
| **Derivation Path** | : SMTCF_State_Resp |
| **Comments** | : SMT attribute. |

**Constraint Value**

REPLACE CF_StateType BY CF_State_Cwrpb



Copyright International Organization for Standardization
Provided by IHS under license with ISO
No reproduction or networking permitted without license from IHS
Not for Resale

| ASN.1 Type Constraint Declaration | | | |
|---|---|---|---|
| **Constraint Name** : SMTCF_State_Wrps<br>**Structured Type** : SMTCF_State<br>**Derivation Path** : SMTCF_State_Resp<br>**Comments** : SMT attribute. | | | |
| **Constraint Value** | | | |
| REPLACE | CF_StateType | BY | CF_State_Wrps |

| ASN.1 Type Constraint Declaration | | | |
|---|---|---|---|
| **Constraint Name** : SMTCF_State_Wrpab<br>**Structured Type** : SMTCF_State<br>**Derivation Path** : SMTCF_State_Resp<br>**Comments** : SMT attribute. | | | |
| **Constraint Value** | | | |
| REPLACE | CF_StateType | BY | CF_State_Wrpab |

| ASN.1 Type Constraint Declaration | | |
|---|---|---|
| **Constraint Name** : SMTHoldState_Req<br>**Structured Type** : SMTHoldState<br>**Derivation Path** :<br>**Comments** : SMT attribute. This attribute is optional. | | |
| **Constraint Value** | | |
| { | Parameter_Type | ‘102B’H, |
| | Parameter_Length | ‘0004’H, |
| | PAD2 | OMIT, |
| | HoldStateType | OMIT } |

| ASN.1 Type Constraint Declaration | | |
|---|---|---|
| **Constraint Name** : SMTHoldState_Resp<br>**Structured Type** : SMTHoldState<br>**Derivation Path** :<br>**Comments** : SMT attribute. This attribute is optional. | | |
| **Constraint Value** | | |
| { | Parameter_Type | ‘102B’H, |
| | Parameter_Length | ‘0004’H, |
| | PAD2 | PAD_2, |
| | HoldStateType | HoldState_NH<br>--not_holding; default and initial value--} |


Copyright International Organization for Standardization
Provided by IHS under license with ISO
No reproduction or networking permitted without license from IHS
Not for Resale

| ASN.1 Type Constraint Declaration | |
|---|---|
| **Constraint Name** | : SMTHoldState_HP |
| **Structured Type** | : SMTHoldState |
| **Derivation Path** | : SMTHoldState_Resp |
| **Comments** | : SMT attribute. This attribute is optional. |

**Constraint Value**

```
REPLACE      HoldStateType      BY      HoldState_HP
  --holding_prm--
```

| ASN.1 Type Constraint Declaration | |
|---|---|
| **Constraint Name** | : SMTHoldState_HS |
| **Structured Type** | : SMTHoldState |
| **Derivation Path** | : SMTHoldState_Resp |
| **Comments** | : SMT attribute. This attribute is optional. |

**Constraint Value**

```
REPLACE      HoldStateType      BY      HoldState_HS
  --holding_sec--
```

| ASN.1 Type Constraint Declaration | |
|---|---|
| **Constraint Name** | : SMTRemoteDisconnectFlag_Resp |
| **Structured Type** | : SMTRemoteDisconnectFlag |
| **Derivation Path** | : |
| **Comments** | : SMT attribute. |

**Constraint Value**

```
{    Parameter_Type        '102C'H,
     Parameter_Length      '0004'H,
     PAD3                  PAD_3,
     RemoteDisconnectFlag  ?       }
```

| ASN.1 Type Constraint Declaration | |
|---|---|
| **Constraint Name** | : SMTStationStatus_Req |
| **Structured Type** | : SMTStationStatus |
| **Derivation Path** | : |
| **Comments** | : SMT attribute. |

**Constraint Value**

```
{    Parameter_Type        '102D'H,
     Parameter_Length      '0004'H,
     PAD2                  OMIT,
     StationStatus         OMIT    }
```



Copyright International Organization for Standardization
Provided by IHS under license with ISO
No reproduction or networking permitted without license from IHS
Not for Resale

| ASN.1 Type Constraint Declaration | | | |
|---|---|---|---|
| **Constraint Name** | : | SMTStationStatus_Resp | |
| **Structured Type** | : | SMTStationStatus | |
| **Derivation Path** | : | | |
| **Comments** | : | SMT attribute. | |
| **Constraint Value** | | | |
| { | Parameter_Type | ‘102D’H, | |
| | Parameter_Length | ‘0004’H, | |
| | PAD2 | PAD_2, | |
| | StationStatus | Status_Q | } |

| ASN.1 Type Constraint Declaration | | | |
|---|---|---|---|
| **Constraint Name** | : | SMTStationStatus_T | |
| **Structured Type** | : | SMTStationStatus | |
| **Derivation Path** | : | SMTStationStatus_Resp | |
| **Comments** | : | SMT attribute. | |
| **Constraint Value** | | | |
| REPLACE | stationstatus | BY | Status_T --thru-- |

| ASN.1 Type Constraint Declaration | | | |
|---|---|---|---|
| **Constraint Name** | : | SMTStationStatus_S | |
| **Structured Type** | : | SMTStationStatus | |
| **Derivation Path** | : | SMTStationStatus_Resp | |
| **Comments** | : | SMT attribute. | |
| **Constraint Value** | | | |
| REPLACE | stationstatus | BY | Status_S --separated-- |

| ASN.1 Type Constraint Declaration | | | |
|---|---|---|---|
| **Constraint Name** | : | SMTStationStatus_C | |
| **Structured Type** | : | SMTStationStatus | |
| **Derivation Path** | : | SMTStationStatus_Resp | |
| **Comments** | : | SMT attribute. | |
| **Constraint Value** | | | |
| REPLACE | stationstatus | BY | Status_C --concatenated-- |



Copyright International Organization for Standardization
Provided by IHS under license with ISO
No reproduction or networking permitted without license from IHS
Not for Resale

| ASN.1 Type Constraint Declaration | |
|---|---|
| **Constraint Name** | : SMTPeerWrapFlag_Req |
| **Structured Type** | : SMTPeerWrapFlag |
| **Derivation Path** | : |
| **Comments** | : SMT attribute. |

**Constraint Value**

```
{       Parameter_Type      ‘102E’H,
        Parameter_Length    ‘0004’H,
        PAD3                OMIT,
        PeerWrapFlag        OMIT    }
```

| ASN.1 Type Constraint Declaration | |
|---|---|
| **Constraint Name** | : SMTPeerWrapFlag_Resp |
| **Structured Type** | : SMTPeerWrapFlag |
| **Derivation Path** | : |
| **Comments** | : SMT attribute. |

**Constraint Value**

```
{       Parameter_Type      ‘102E’H,
        Parameter_Length    ‘0004’H,
        PAD3                PAD_3,
        PeerWrapFlag        ?       }
```

| ASN.1 Type Constraint Declaration | |
|---|---|
| **Constraint Name** | : SMTPeerWrapFlag_S |
| **Structured Type** | : SMTPeerWrapFlag |
| **Derivation Path** | : SMTPeerWrapFalg_Resp |
| **Comments** | : SMT attribute. |

**Constraint Value**

```
REPLACE     PeerWrapFlag        BY      TRUE    }
```

| ASN.1 Type Constraint Declaration | |
|---|---|
| **Constraint Name** | : SMTPeerWrapFlag_C |
| **Structured Type** | : SMTPeerWrapFlag |
| **Derivation Path** | : SMTPeerWrapFalg_Resp |
| **Comments** | : SMT attribute. |

**Constraint Value**

```
REPLACE     PeerWrapFlag        BY      FALSE   }
```



Copyright International Organization for Standardization
Provided by IHS under license with ISO
No reproduction or networking permitted without license from IHS
Not for Resale

#### 10.3.2.1.4 SMT MIB Operation Group Attributes Constraints

| ASN.1 Type Constraint Declaration | |
|---|---|
| **Constraint Name** | : SMTMIBOperationGrp_Resp |
| **Structured Type** | : SMTMIBOperationGrp |
| **Derivation Path** | : |
| **Comments** | : SMT attribute group. |

**Constraint Value**

```
{   timestamp              SMTTimeStamp_Resp,
    transitiontimestamp    SMTTransitionTimeStamp_Resp,
    setcount               SMTSetCount_Resp,            -- optional--
    lastsetstationid       SMTLastSetStationId_Resp     -- optional--   }
```

| ASN.1 Type Constraint Declaration | |
|---|---|
| **Constraint Name** | : SMTTimeStamp_Resp |
| **Structured Type** | : SMTTimeStamp |
| **Derivation Path** | : |
| **Comments** | : SMT attribute. |

**Constraint Value**

```
{   Parameter_Type          '1033'H,
    Parameter_Length        '0008'H,
    TimeStamp          ?    }
```

| ASN.1 Type Constraint Declaration | |
|---|---|
| **Constraint Name** | : SMTTransitionTimeStamp_Resp |
| **Structured Type** | : SMTTransitionTimeStamp |
| **Derivation Path** | : |
| **Comments** | : SMT attribute. |

**Constraint Value**

```
{   Parameter_Type          '1034'H,
    Parameter_Length        '0008'H,
    TransitionTimeStamp ?   }
```

| ASN.1 Type Constraint Declaration | |
|---|---|
| **Constraint Name** | : SMTSetCount_Req |
| **Structured Type** | : SMTSetCount |
| **Derivation Path** | : |
| **Comments** | : SMT attribute. This attribute is optional. |

**Constraint Value**

```
{   Parameter_Type      '1035'H,
    Parameter_Length    OMIT,
    Count               OMIT,
    SetTimeStamp        OMIT   }
```



Copyright International Organization for Standardization
Provided by IHS under license with ISO
No reproduction or networking permitted without license from IHS Not for Resale

| ASN.1 Type Constraint Declaration | | | |
|---|---|---|---|
| **Constraint Name** : SMTSetCount_Resp<br>**Structured Type** : SMTSetCount<br>**Derivation Path** :<br>**Comments** : SMT attribute. This attribute is optional. | | | |
| **Constraint Value** | | | |
| { | Parameter_Type | ‘1035’H, | |
| | Parameter_Length | ?, | |
| | Count | *, | |
| | SetTimeStamp | * | } |

| ASN.1 Type Constraint Declaration | | | |
|---|---|---|---|
| **Constraint Name** : SMTSetCount_New<br>**Structured Type** : SMTSetCount<br>**Derivation Path** : SMTSetCount_Resp<br>**Comments** : SMT attribute. This attribute is carried in PMF set response frame if the PMF Set protocol is implemented. | | | |
| **Constraint Value** | | | |
| REPLACE | Count | BY | New_SetCount, |
| REPLACE | SetTimeStamp | BY | ? |

| ASN.1 Type Constraint Declaration | | |
|---|---|---|
| **Constraint Name** : SMTLastSetStationId_Resp<br>**Structured Type** : SMTLastSetStationId<br>**Derivation Path** :<br>**Comments** : SMT attribute. This attribute is optional. | | |
| **Constraint Value** | | |
| { | Parameter_Type | ‘1036’H, |
| | Parameter_Length | ?, |
| | ImplementerOctet | *, |
| | LastSetStation_Address | * } |

| ASN.1 Type Constraint Declaration | | | |
|---|---|---|---|
| **Constraint Name** : SMTLastSetStationId_IUT<br>**Structured Type** : SMTLastSetStationId<br>**Derivation Path** : SMTLastSetStationId_Resp<br>**Comments** : SMT attribute. This attribute is carried in PMF set response frame if the PMF Set protocol is implemented. | | | |
| **Constraint Value** | | | |
| REPLACE | ImplementerOctet | BY | ?, |
| REPLACE | LastSetStation_Address | BY | IUT_ADDRESS |



Copyright International Organization for Standardization
Provided by IHS under license with ISO
No reproduction or networking permitted without license from IHS
Not for Resale

### 10.3.2.2 ASN.1 Type Constraint for MAC Attributes

| ASN.1 Type Constraint Declaration |
|---|
| **Constraint Name** : MACGrp1_Req<br>**Structured Type** : MACGrp<br>**Derivation Path** :<br>**Comments** : fddiMACCapabilitiesGrp. |
| **Constraint Value** |
| { Parameter_Type ‘200A’H,<br>Parameter_Length OMIT,<br>Resource_Index OMIT,<br>Parameter_Value OMIT } |

| ASN.1 Type Constraint Declaration |
|---|
| **Constraint Name** : MACGrp2_Req<br>**Structured Type** : MACGrp<br>**Derivation Path** : MACGrp1_Req<br>**Comments** : fddiMACConfigGrp. |
| **Constraint Value** |
| REPLACE Parameter_Type BY ‘2014’H |

| ASN.1 Type Constraint Declaration |
|---|
| **Constraint Name** : MACGrp3_Req<br>**Structured Type** : MACGrp<br>**Derivation Path** : MACGrp1_Req<br>**Comments** : fddiMACAddressGrp. |
| **Constraint Value** |
| REPLACE Parameter_Type BY ‘2028’H |


Copyright International Organization for Standardization
Provided by IHS under license with ISO
No reproduction or networking permitted without license from IHS
Not for Resale

| ASN.1 Type Constraint Declaration | | | |
|---|---|---|---|
| **Constraint Name** : MACGrp4_Req<br>**Structured Type** : MACGrp<br>**Derivation Path** : MACGrp1_Req<br>**Comments** : fddiMACOperationGrp. | | | |
| **Constraint Value** | | | |
| REPLACE | Parameter_Type | BY | ‘2032’H |

| ASN.1 Type Constraint Declaration | | | |
|---|---|---|---|
| **Constraint Name** : MACGrp5_Req<br>**Structured Type** : MACGrp<br>**Derivation Path** : MACGrp1_Req<br>**Comments** : fddiMACCountersGrp. | | | |
| **Constraint Value** | | | |
| REPLACE | Parameter_Type | BY | ‘2046’H |

| ASN.1 Type Constraint Declaration | | | |
|---|---|---|---|
| **Constraint Name** : MACGrp6_Req<br>**Structured Type** : MACGrp<br>**Derivation Path** : MACGrp1_Req<br>**Comments** : fddiMACFrameErrorConditionGrp. | | | |
| **Constraint Value** | | | |
| REPLACE | Parameter_Type | BY | ‘205A’H |

| ASN.1 Type Constraint Declaration | | | |
|---|---|---|---|
| **Constraint Name** : MACGrp7_Req<br>**Structured Type** : MACGrp<br>**Derivation Path** : MACGrp1_Req<br>**Comments** : fddiMACNotCopiedConditionGrp. This attribute group is optional. | | | |
| **Constraint Value** | | | |
| REPLACE | Parameter_Type | BY | ‘2064’H |

| ASN.1 Type Constraint Declaration | | | |
|---|---|---|---|
| **Constraint Name** : MACGrp8_Req<br>**Structured Type** : MACGrp<br>**Derivation Path** : MACGrp1_Req<br>**Comments** : fddiMACStatusGrp. | | | |
| **Constraint Value** | | | |
| REPLACE | Parameter_Type | BY | ‘206E’H |

--`,,```,,,,````-`-`,,`,,`,`,,`---



Copyright International Organization for Standardization
Provided by IHS under license with ISO
No reproduction or networking permitted without license from IHS
Not for Resale

| ASN.1 Type Constraint Declaration | |
|---|---|
| **Constraint Name** | : MACGrp1_Resp |
| **Structured Type** | : MACGrp |
| **Derivation Path** | : |
| **Comments** | : fddiMACCapabilitiesGrp. |

| Constraint Value | | |
|---|---|---|
| { | Parameter_Type | ‘200A’H, |
| | Parameter_Length | ? |
| | Resource_Index | ? |
| | Parameter_Value | MACCapabilitiesGrp_Resp } |

| ASN.1 Type Constraint Declaration | |
|---|---|
| **Constraint Name** | : MACGrp2_Resp |
| **Structured Type** | : MACGrp |
| **Derivation Path** | : |
| **Comments** | : fddiMACConfigGrp. |

| Constraint Value | | |
|---|---|---|
| { | Parameter_Type | ‘2014’H, |
| | Parameter_Length | ? |
| | Resource_Index | ? |
| | Parameter_Value | MACConfigGrp_Resp } |

| ASN.1 Type Constraint Declaration | |
|---|---|
| **Constraint Name** | : MACGrp3_Resp |
| **Structured Type** | : MACGrp |
| **Derivation Path** | : |
| **Comments** | : fddiMACAddressGrp. |

| Constraint Value | | |
|---|---|---|
| { | Parameter_Type | ‘2028’H, |
| | Parameter_Length | ? |
| | Resource_Index | ? |
| | Parameter_Value | MACAddressGrp_Resp } |

| ASN.1 Type Constraint Declaration | |
|---|---|
| **Constraint Name** | : MACGrp4_Resp |
| **Structured Type** | : MACGrp |
| **Derivation Path** | : |
| **Comments** | : fddiMACOperationGrp. |

| Constraint Value | | |
|---|---|---|
| { | Parameter_Type | ‘2032’H, |
| | Parameter_Length | ? |
| | Resource_Index | ? |
| | Parameter_Value | MACOperationGrp_Resp } |


--`,,```,,,,````-`-`,,`,,`,`,,`---
Copyright International Organization for Standardization
Provided by IHS under license with ISO
No reproduction or networking permitted without license from IHS
Not for Resale

| ASN.1 Type Constraint Declaration | |
|---|---|
| **Constraint Name** | : MACGrp5_Resp |
| **Structured Type** | : MACGrp |
| **Derivation Path** | : |
| **Comments** | : fddiMACCountersGrp. |

| Constraint Value | | |
|---|---|---|
| { | Parameter_Type | '2046'H, |
| | Parameter_Length | ? |
| | Resource_Index | ? |
| | Parameter_Value | MACCountersGrp_Resp } |

| ASN.1 Type Constraint Declaration | |
|---|---|
| **Constraint Name** | : MACGrp6_Resp |
| **Structured Type** | : MACGrp |
| **Derivation Path** | : |
| **Comments** | : fddiMACFrameErrorConditionGrp. |

| Constraint Value | | |
|---|---|---|
| { | Parameter_Type | '205A'H, |
| | Parameter_Length | ? |
| | Resource_Index | ? |
| | Parameter_Value | MACFrameErrorConditionGrp_Resp } |

| ASN.1 Type Constraint Declaration | |
|---|---|
| **Constraint Name** | : MACGrp7_Resp |
| **Structured Type** | : MACGrp |
| **Derivation Path** | : |
| **Comments** | : fddiMACNotCopiedConditionGrp. This attribute group is optional. |

| Constraint Value | | |
|---|---|---|
| { | Parameter_Type | '2064'H, |
| | Parameter_Length | ? |
| | Resource_Index | ? |
| | Parameter_Value | MACNotCopiedConditionGrp_Resp } |

| ASN.1 Type Constraint Declaration | |
|---|---|
| **Constraint Name** | : MACGrp8_Resp |
| **Structured Type** | : MACGrp |
| **Derivation Path** | : |
| **Comments** | : fddiMACStatusGrp. |

| Constraint Value | | |
|---|---|---|
| { | Parameter_Type | '206E'H, |
| | Parameter_Length | ? |
| | Resource_Index | ? |
| | Parameter_Value | MACStatusGrp_Resp } |



Copyright International Organization for Standardization
Provided by IHS under license with ISO
No reproduction or networking permitted without license from IHS
Not for Resale

#### 10.3.2.2.1 MAC Capabilities Group Attributes Constraints

| ASN.1 Type Constraint Declaration | | |
|---|---|---|
| **Constraint Name** : MACCapabilitiesGrp_Resp<br>**Structured Type** : MACCapabilitiesGrp<br>**Derivation Path** :<br>**Comments** : MAC attribute group. | | |
| **Constraint Value** | | |
| { | framestatusfunctions | MACFrameStatusFunctions_Resp, |
| | bridgefunctions | MACBridgeFunctions_Resp, --optional-- |
| | tmaxcapability | MACT_MaxCapability_Resp, |
| | tvxcapability | MACTVXCapability_Resp } |

| ASN.1 Type Constraint Declaration | | |
|---|---|---|
| **Constraint Name** : MACFrameStatusFunctions_Resp<br>**Structured Type** : MACFrameStatusFunctions<br>**Derivation Path** :<br>**Comments** : MAC attribute. | | |
| **Constraint Value** | | |
| { | Parameter_Type | '200B'H, |
| | Parameter_Length | '0008'H, |
| | Resource_Index | ?, |
| | PAD2 | PAD_2, |
| | FrameStatusFunctions | FS_Functions_Q } |

| ASN.1 Type Constraint Declaration | | |
|---|---|---|
| **Constraint Name** : MACBridgeFunction_Req<br>**Structured Type** : MACBridgeFunctions<br>**Derivation Path** :<br>**Comments** : MAC attribute. This attribute is optional. | | |
| **Constraint Value** | | |
| { | Parameter_Type | '200C'H, |
| | Parameter_Length | ?, |
| | Resource_Index | M_Indx, |
| | PAD2 | OMIT, |
| | BridgeFunctions | OMIT } |

--`,,```,,,,````-`-`,,`,,`,`,,`---



Copyright International Organization for Standardization
Provided by IHS under license with ISO
No reproduction or networking permitted without license from IHS Not for Resale

| ASN.1 Type Constraint Declaration | | |
|---|---|---|
| **Constraint Name** | : | MACBridgeFunctions_Resp |
| **Structured Type** | : | MACBridgeFunctions |
| **Derivation Path** | : | |
| **Comments** | : | MAC attribute. This attribute is optional. |

| Constraint Value | | |
|---|---|---|
| { | Parameter_Type | ‘200C’H, |
| | Parameter_Length | ?, |
| | Resource_Index | ?, |
| | PAD2 | PAD_2, |
| | BridgeFunctions | BridgeType_Q } |

| ASN.1 Type Constraint Declaration | | |
|---|---|---|
| **Constraint Name** | : | MACBridgeFunction_IUT |
| **Structured Type** | : | MACBridgeFunctions |
| **Derivation Path** | : | MACBridgeFunction_Resp |
| **Comments** | : | MAC attribute. This attribute is optional. |

| Constraint Value | | | |
|---|---|---|---|
| REPLACE | Resource_Index | BY | M_Indx, |
| REPLACE | BridgeFunctions | BY | BridgeType_IUT |

| ASN.1 Type Constraint Declaration | | |
|---|---|---|
| **Constraint Name** | : | MACT_MaxCapability_Req |
| **Structured Type** | : | MACT_MaxCapability |
| **Derivation Path** | : | |
| **Comments** | : | MAC attribute. |

| Constraint Value | | |
|---|---|---|
| { | Parameter_Type | ‘200D’H, |
| | Parameter_Length | ‘0008’H, |
| | Resource_Index | M_Indx, |
| | T_MaxCapability | OMIT } |

| ASN.1 Type Constraint Declaration | | |
|---|---|---|
| **Constraint Name** | : | MACT_MaxCapability_Resp |
| **Structured Type** | : | MACT_MaxCapability |
| **Derivation Path** | : | |
| **Comments** | : | MAC attribute. |

| Constraint Value | | |
|---|---|---|
| { | Parameter_Type | ‘200D’H, |
| | Parameter_Length | ‘0008’H, |
| | Resource_Index | ?, |
| | T_MaxCapability | ? } |



Copyright International Organization for Standardization
Provided by IHS under license with ISO
No reproduction or networking permitted without license from IHS
Not for Resale

| ASN.1 Type Constraint Declaration | | | |
|---|---|---|---|
| **Constraint Name** : MACT_MaxCapability_IUT<br>**Structured Type** : MACT_MaxCapability<br>**Derivation Path** : MACT_MaxCapability_Resp<br>**Comments** : MAC attribute. | | | |
| **Constraint Value** | | | |
| REPLACE | Resource_Index | BY | M_Indx, |
| REPLACE | T_MaxCapability | BY | INT_TO_HEX(TTC(TIME(IUT_T_Max)), 8) |

| ASN.1 Type Constraint Declaration | | |
|---|---|---|
| **Constraint Name** : MACTVXCapability_Req<br>**Structured Type** : MACTVXCapability<br>**Derivation Path** :<br>**Comments** : MAC attribute. | | |
| **Constraint Value** | | |
| { | Parameter_Type | ‘200E’H, |
| | Parameter_Length | ‘0008’H, |
| | Resource_Index | M_Indx, |
| | TVXCapability | OMIT } |

| ASN.1 Type Constraint Declaration | | |
|---|---|---|
| **Constraint Name** : MACTVXCapability_Resp<br>**Structured Type** : MACTVXCapability<br>**Derivation Path** :<br>**Comments** : MAC attribute. | | |
| **Constraint Value** | | |
| { | Parameter_Type | ‘200E’H, |
| | Parameter_Length | ‘0008’H, |
| | Resource_Index | ?, |
| | TVXCapability | ? } |

| ASN.1 Type Constraint Declaration | | | |
|---|---|---|---|
| **Constraint Name** : MACTVXCapability_IUT<br>**Structured Type** : MACTVXCapability<br>**Derivation Path** : MACTVXCapability_Resp<br>**Comments** : MAC attribute. | | | |
| **Constraint Value** | | | |
| REPLACE | Resource_Index | BY | M_Indx, |
| REPLACE | TVXCapability | BY | INT_TO_HEX(TTC(TIME(IUT_TVX_Value)), 8) |


Copyright International Organization for Standardization
Provided by IHS under license with ISO
No reproduction or networking permitted without license from IHS
Not for Resale

#### 10.3.2.2.2 MAC Configuration Group Attributes Constraints

| ASN.1 Type Constraint Declaration | | |
|---|---|---|
| **Constraint Name** : MACConfigGrp_Resp | | |
| **Structured Type** : MACConfigGroup | | |
| **Derivation Path** : | | |
| **Comments** : MAC attribute group. | | |
| **Constraint Value** | | |
| { | availablepaths | MACAvailablePaths_Resp, |
| | currentpath | MACCurrentPath_Resp, |
| | upstreamnbr | MACUpstreamNbr_Resp, |
| | downstreamnbr | MACDownstreamNbr_Resp, |
| | oldupstreamnbr | MACOldUpstreamNbr_Resp, |
| | olddownstreamnbr | MACOldDownstreamNbr_Resp, |
| | dupaddresstest | MACDupAddressTest_Resp, |
| | requestedpaths | MACRequestedPaths_Resp, |
| | downstreamporttype | MACDownstreamPORTType_Resp, |
| | macindex | MACIndex_Resp } |

| ASN.1 Type Constraint Declaration | | |
|---|---|---|
| **Constraint Name** : MACAvailablePaths_Req | | |
| **Structured Type** : MACAvailablePaths | | |
| **Derivation Path** : | | |
| **Comments** : MAC attribute. | | |
| **Constraint Value** | | |
| { | Parameter_Type | ‘2016’H, |
| | Parameter_Length | ‘0008’H, |
| | Resource_Index | M_Indx, |
| | PAD3 | OMIT, |
| | AvailablePaths | OMIT } |

| ASN.1 Type Constraint Declaration | | |
|---|---|---|
| **Constraint Name** : MACAvailablePaths_Resp | | |
| **Structured Type** : MACAvailablePaths | | |
| **Derivation Path** : | | |
| **Comments** : MAC attribute. | | |
| **Constraint Value** | | |
| { | Parameter_Type | ‘2016’H, |
| | Parameter_Length | ‘0008’H, |
| | Resource_Index | ?, |
| | PAD3 | PAD_3, |
| | AvailablePaths | AvailablePaths_Q } |



Copyright International Organization for Standardization
Provided by IHS under license with ISO
No reproduction or networking permitted without license from IHS
Not for Resale

| ASN.1 Type Constraint Declaration | | | |
|---|---|---|---|
| **Constraint Name** : MACAvailablePaths_IUT | | | |
| **Structured Type** : MACAvailablePaths | | | |
| **Derivation Path** : | | | |
| **Comments** : MAC attribute. | | | |
| **Constraint Value** | | | |
| REPLACE | Resource_Index | BY | M_Indx, |
| REPLACE | AvailablePaths BY | | MACAvailablePaths |

| ASN.1 Type Constraint Declaration | | |
|---|---|---|
| **Constraint Name** : MACCurrentPath_Req | | |
| **Structured Type** : MACCurrentPath | | |
| **Derivation Path** : | | |
| **Comments** : MAC attribute. | | |
| **Constraint Value** | | |
| { | Parameter_Type | ‘2017’H, |
| | Parameter_Length | ‘0008’H, |
| | Resource_Index | M_Indx, |
| | PAD2 | OMIT, |
| | CurrentPath | OMIT } |

| ASN.1 Type Constraint Declaration | | |
|---|---|---|
| **Constraint Name** : MACCurrentPath_Resp | | |
| **Structured Type** : MACCurrentPath | | |
| **Derivation Path** : | | |
| **Comments** : MAC attribute. | | |
| **Constraint Value** | | |
| { | Parameter_Type | ‘2017’H, |
| | Parameter_Length | ‘0008’H, |
| | Resource_Index | ?, |
| | PAD2 | PAD_2, |
| | CurrentPath | CurrentPathType_Q } |

| ASN.1 Type Constraint Declaration | | | |
|---|---|---|---|
| **Constraint Name** : MACCurrentPath_IUT | | | |
| **Structured Type** : MACCurrentPath | | | |
| **Derivation Path** : MACCurrentPath_Resp | | | |
| **Comments** : MAC attribute. | | | |
| **Constraint Value** | | | |
| REPLACE | Resource_Index | BY | M_Indx, |
| REPLACE | CurrentPath | BY | MACCurrPath |



--`,,```,,,,````-`-`,,`,,`,`,,`---
Copyright International Organization for Standardization
Provided by IHS under license with ISO
No reproduction or networking permitted without license from IHS
Not for Resale

| ASN.1 Type Constraint Declaration | | |
|---|---|---|
| **Constraint Name** | : | MACUpstreamNbr_Req |
| **Structured Type** | : | MACUpstreamNbr |
| **Derivation Path** | : | |
| **Comments** | : | MAC attribute. |

| Constraint Value | | |
|---|---|---|
| { | Parameter_Type | ‘2018’H, |
| | Parameter_Length | ‘000C’H, |
| | Resource_Index | M_Indx, |
| | PAD2 | OMIT, |
| | UpstreamNbr_Address | OMIT } |

| ASN.1 Type Constraint Declaration | | |
|---|---|---|
| **Constraint Name** | : | MACUpstreamNbr_Resp |
| **Structured Type** | : | MACUpstreamNbr |
| **Derivation Path** | : | |
| **Comments** | : | MAC attribute. |

| Constraint Value | | |
|---|---|---|
| { | Parameter_Type | ‘2018’H, |
| | Parameter_Length | ‘000C’H, |
| | Resource_Index | ?, |
| | PAD2 | PAD_2, |
| | UpstreamNbr_Address | ? } |

| ASN.1 Type Constraint Declaration | | |
|---|---|---|
| **Constraint Name** | : | MACUpstreamNbr_TSTR |
| **Structured Type** | : | MACUpstreamNbr |
| **Derivation Path** | : | MACUpstreamNbr_Resp |
| **Comments** | : | MAC attribute. |

| Constraint Value | | | | |
|---|---|---|---|---|
| REPLACE | Resource_Index | BY | M_Indx, |
| REPLACE | UpstreamNbr_Address | BY | TESTER_ADDRESS |

| ASN.1 Type Constraint Declaration | | |
|---|---|---|
| **Constraint Name** | : | MACUpstreamNbr_UNK |
| **Structured Type** | : | MACUpstreamNbr |
| **Derivation Path** | : | MACUpstreamNbr_TSTR |
| **Comments** | : | MAC attribute. |

| Constraint Value | | | |
|---|---|---|---|
| REPLACE | UpstreamNbr_Address | BY | SMT_Unknown_Address |



Copyright International Organization for Standardization
Provided by IHS under license with ISO
No reproduction or networking permitted without license from IHS
Not for Resale

| ASN.1 Type Constraint Declaration | | |
|---|---|---|
| **Constraint Name** | : | MACDownstreamNbr_Req |
| **Structured Type** | : | MACDownstreamNbr |
| **Derivation Path** | : | |
| **Comments** | : | MAC attribute. |

| Constraint Value | | |
|---|---|---|
| { | Parameter_Type | ‘2019’H, |
| | Parameter_Length | ‘000C’H, |
| | Resource_Index | M_Indx, |
| | PAD2 | OMIT, |
| | DownstreamNbr_Address | OMIT } |

| ASN.1 Type Constraint Declaration | | |
|---|---|---|
| **Constraint Name** | : | MACDownstreamNbr_Resp |
| **Structured Type** | : | MACDownstreamNbr |
| **Derivation Path** | : | |
| **Comments** | : | MAC attribute. |

| Constraint Value | | |
|---|---|---|
| { | Parameter_Type | ‘2019’H, |
| | Parameter_Length | ‘000C’H, |
| | Resource_Index | ?, |
| | PAD2 | PAD_2, |
| | DownstreamNbr_Address | ? } |

| ASN.1 Type Constraint Declaration | | |
|---|---|---|
| **Constraint Name** | : | MACDownstreamNbr_TSTR |
| **Structured Type** | : | MACDownstreamNbr |
| **Derivation Path** | : | MACDownstreamNbr_Resp |
| **Comments** | : | MAC attribute. |

| Constraint Value | | | |
|---|---|---|---|
| REPLACE | Resource_Index | BY | M_Indx |
| REPLACE | DownstreamNbr_Address | BY | TESTER_ADDRESS |

| ASN.1 Type Constraint Declaration | | |
|---|---|---|
| **Constraint Name** | : | MACDownstreamNbr_UNK |
| **Structured Type** | : | MACDownstreamNbr |
| **Derivation Path** | : | MACDownstreamNbr_TSTR |
| **Comments** | : | MAC attribute. |

| Constraint Value | | | |
|---|---|---|---|
| REPLACE | DownstreamNbr_Address | BY | SMT_Unknown_Address |


Copyright International Organization for Standardization
Provided by IHS under license with ISO
No reproduction or networking permitted without license from IHS
Not for Resale

| ASN.1 Type Constraint Declaration | | |
|---|---|---|
| **Constraint Name** | : | MACOldUpstreamNbr_Req |
| **Structured Type** | : | MACOldUpstreamNbr |
| **Derivation Path** | : | |
| **Comments** | : | MAC attribute. |

| Constraint Value | | |
|---|---|---|
| { | Parameter_Type | ‘201A’H, |
| | Parameter_Length | ‘000C’H, |
| | Resource_Index | M_Indx, |
| | PAD2 | OMIT, |
| | OldUpstreamNbr_Address | OMIT } |

| ASN.1 Type Constraint Declaration | | |
|---|---|---|
| **Constraint Name** | : | MACOldUpstreamNbr_Resp |
| **Structured Type** | : | MACOldUpstreamNbr |
| **Derivation Path** | : | |
| **Comments** | : | MAC attribute. |

| Constraint Value | | |
|---|---|---|
| { | Parameter_Type | ‘201A’H, |
| | Parameter_Length | ‘000C’H, |
| | Resource_Index | ?, |
| | PAD2 | PAD_2, |
| | OldUpstreamNbr_Address | ? } |

| ASN.1 Type Constraint Declaration | | |
|---|---|---|
| **Constraint Name** | : | MACOldUpstreamNbr_IUT |
| **Structured Type** | : | MACOldUpstreamNbr |
| **Derivation Path** | : | MACOldUpstreamNbr_Resp |
| **Comments** | : | MAC attribute. |

| Constraint Value | | | |
|---|---|---|---|
| REPLACE | Resource_Index | BY | M_Indx, |
| REPLACE | OldUpstreamNbr_Address | BY | TESTER_ADDRESS |

| ASN.1 Type Constraint Declaration | | |
|---|---|---|
| **Constraint Name** | : | MACOldDownstreamNbr_Req |
| **Structured Type** | : | MACOldDownstreamNbr |
| **Derivation Path** | : | |
| **Comments** | : | MAC attribute. |

| Constraint Value | | |
|---|---|---|
| { | Parameter_Type | ‘201B’H, |
| | Parameter_Length | ‘000C’H, |
| | Resource_Index | M_Indx, |
| | PAD2 | OMIT, |
| | OldDownstreamNbr_Address | OMIT } |



Copyright International Organization for Standardization
Provided by IHS under license with ISO
No reproduction or networking permitted without license from IHS
Not for Resale

| ASN.1 Type Constraint Declaration | | |
|---|---|---|
| **Constraint Name** | : | MACOldDownstreamNbr_Resp |
| **Structured Type** | : | MACOldDownstreamNbr |
| **Derivation Path** | : | |
| **Comments** | : | MAC attribute. |

| Constraint Value | | |
|---|---|---|
| { | Parameter_Type | ‘201B’H, |
| | Parameter_Length | ‘000C’H, |
| | Resource_Index | ?, |
| | PAD2 | PAD_2, |
| | OldDownstreamNbr_Address | ? } |

| ASN.1 Type Constraint Declaration | | |
|---|---|---|
| **Constraint Name** | : | MACOldDownstreamNbr_IUT |
| **Structured Type** | : | MACOldDownstreamNbr |
| **Derivation Path** | : | MACOldDownstreamNbr_Resp |
| **Comments** | : | MAC attribute. |

| Constraint Value | | | |
|---|---|---|---|
| REPLACE | Resource_Index | BY | M_Indx, |
| REPLACE | OldDownstreamNbr_Address | BY | TESTER_ADDRESS |

| ASN.1 Type Constraint Declaration | | |
|---|---|---|
| **Constraint Name** | : | MACDupAddressTest_Req |
| **Structured Type** | : | MACDupAddressTest |
| **Derivation Path** | : | |
| **Comments** | : | MAC attribute. |

| Constraint Value | | |
|---|---|---|
| { | Parameter_Type | ‘201D’H, |
| | Parameter_Length | ‘0004’H, |
| | Resource_Index | M_Indx, |
| | PAD2 | OMIT, |
| | DupAddressTestType | OMIT } |

| ASN.1 Type Constraint Declaration | | |
|---|---|---|
| **Constraint Name** | : | MACDupAddressTest_Resp |
| **Structured Type** | : | MACDupAddressTest |
| **Derivation Path** | : | |
| **Comments** | : | MAC attribute. |

| Constraint Value | | |
|---|---|---|
| { | Parameter_Type | ‘201D’H, |
| | Parameter_Length | ‘0004’H, |
| | Resource_Index | ?, |
| | PAD2 | PAD_2, |
| | DupAddressTestType | DupAddressTest_Q } |


Copyright International Organization for Standardization
Provided by IHS under license with ISO
No reproduction or networking permitted without license from IHS
Not for Resale

| ASN.1 Type Constraint Declaration | | | |
|---|---|---|---|
| **Constraint Name** : MACDupAddressTest_IUT1 | | | |
| **Structured Type** : MACDupAddressTest | | | |
| **Derivation Path** : MACDupAddressTest_Resp | | | |
| **Comments** : MAC attribute. | | | |
| **Constraint Value** | | | |
| REPLACE | Resource_Index | BY | M_Indx, |
| REPLACE | DupAddressTestType | BY | DupAdressTest_P |

| ASN.1 Type Constraint Declaration | | | |
|---|---|---|---|
| **Constraint Name** : MACDupAddressTest_IUT2 | | | |
| **Structured Type** : MACDupAddressTest | | | |
| **Derivation Path** : MACDupAddressTest_Resp | | | |
| **Comments** : MAC attribute. | | | |
| **Constraint Value** | | | |
| REPLACE | Resource_Index | BY | M_Indx, |
| REPLACE | DupAddressTestType | BY | DupAdressTest_F |

| ASN.1 Type Constraint Declaration | | |
|---|---|---|
| **Constraint Name** : MACRequestedPaths_Req | | |
| **Structured Type** : MACRequestedPaths | | |
| **Derivation Path** : | | |
| **Comments** : MAC attribute. | | |
| **Constraint Value** | | |
| { | Parameter_Type | ‘2020’H, |
| | Parameter_Length | ‘0008’H, |
| | Resource_Index | M_Indx, |
| | PAD3 | OMIT, |
| | RequestedPaths | OMIT } |

| ASN.1 Type Constraint Declaration | | |
|---|---|---|
| **Constraint Name** : MACRequestedPaths_Resp | | |
| **Structured Type** : MACRequestedPaths | | |
| **Derivation Path** : | | |
| **Comments** : MAC attribute. | | |
| **Constraint Value** | | |
| { | Parameter_Type | ‘2020’H, |
| | Parameter_Length | ‘0008’H, |
| | Resource_Index | ?, |
| | PAD3 | PAD_3, |
| | RequestedPaths | PermittedPaths_Q } |



Copyright International Organization for Standardization
Provided by IHS under license with ISO
No reproduction or networking permitted without license from IHS
Not for Resale

| ASN.1 Type Constraint Declaration | | | |
|---|---|---|---|
| **Constraint Name** : MACRequestedPaths_IUT1 | | | |
| **Structured Type** : MACRequestedPaths | | | |
| **Derivation Path** : MACRequestedPaths_Resp | | | |
| **Comments** : MAC attribute. | | | |
| **Constraint Value** | | | |
| REPLACE | Resource_Index | BY | M_Indx, |
| REPLACE | RequestedPaths | BY | PermittedPaths_MAC1 |

| ASN.1 Type Constraint Declaration | | | |
|---|---|---|---|
| **Constraint Name** : MACRequestedPaths_IUT2 | | | |
| **Structured Type** : MACRequestedPaths | | | |
| **Derivation Path** : MACRequestedPaths_Resp | | | |
| **Comments** : MAC attribute. | | | |
| **Constraint Value** | | | |
| REPLACE | Resource_Index | BY | M_Indx, |
| REPLACE | RequestedPaths | BY | PermittedPaths_MAC2 |

| ASN.1 Type Constraint Declaration | | |
|---|---|---|
| **Constraint Name** : MACDownstreamPORTType_Req | | |
| **Structured Type** : MACDownstreamPORTType | | |
| **Derivation Path** : | | |
| **Comments** : MAC attribute. | | |
| **Constraint Value** | | |
| { | Parameter_Type | ‘2021’H, |
| | Parameter_Length | ‘0008’H, |
| | Resource_Index | M_Indx, |
| | PAD2 | OMIT, |
| | DownstreamPORTType | OMIT } |

| ASN.1 Type Constraint Declaration | | |
|---|---|---|
| **Constraint Name** : MACDownstreamPORTType_Resp | | |
| **Structured Type** : MACDownstreamPORTType | | |
| **Derivation Path** : | | |
| **Comments** : MAC attribute. | | |
| **Constraint Value** | | |
| { | Parameter_Type | ‘2021’H, |
| | Parameter_Length | ‘0008’H, |
| | Resource_Index | ?, |
| | PAD2 | PAD_2, |
| | DownstreamPORTType | PortType_Q } |



Copyright International Organization for Standardization
Provided by IHS under license with ISO
No reproduction or networking permitted without license from IHS
Not for Resale

| ASN.1 Type Constraint Declaration | | | |
|---|---|---|---|
| **Constraint Name** : MACDownstreamPORTType_IUT<br>**Structured Type** : MACDownstreamPORTType<br>**Derivation Path** : MACDownstreamPORTType_Resp<br>**Comments** : MAC attribute. | | | |
| **Constraint Value** | | | |
| REPLACE | Resource_Index | BY | M_Indx, |
| REPLACE | DownstreamPORTType | BY | PortType_B |

| ASN.1 Type Constraint Declaration | | |
|---|---|---|
| **Constraint Name** : MACIndex_Req0<br>**Structured Type** : MACIndex<br>**Derivation Path** :<br>**Comments** : MAC attribute. | | |
| **Constraint Value** | | |
| { | Parameter_Type | ‘2022’H, |
| | Parameter_Length | ‘0008’H, |
| | Resource_Index | ‘00000000’H, |
| | PAD2 | OMIT, |
| | MACIndx | OMIT } |

| ASN.1 Type Constraint Declaration | | | |
|---|---|---|---|
| **Constraint Name** : MACIndex_Req1<br>**Structured Type** : MACIndex<br>**Derivation Path** : MACIndex_Req0<br>**Comments** : MAC attribute. | | | |
| **Constraint Value** | | | |
| REPLACE | Resource_Index | BY | ‘00000001’H |

| ASN.1 Type Constraint Declaration | | |
|---|---|---|
| **Constraint Name** : MACIndex_Resp<br>**Structured Type** : MACIndex<br>**Derivation Path** :<br>**Comments** : MAC attribute. | | |
| **Constraint Value** | | |
| { | Parameter_Type | ‘2022’H, |
| | Parameter_Length | ‘0008’H, |
| | Resource_Index | ?, |
| | PAD2 | PAD_2, |
| | MACIndx | ? } |



Copyright International Organization for Standardization
Provided by IHS under license with ISO
No reproduction or networking permitted without license from IHS
Not for Resale

| ASN.1 Type Constraint Declaration | | | |
|---|---|---|---|
| **Constraint Name** : MACIndex_0 | | | |
| **Structured Type** : MACIndex | | | |
| **Derivation Path** : MACIndex_Resp | | | |
| **Comments** : MAC attribute. | | | |
| **Constraint Value** | | | |
| REPLACE | Resource_Index | BY | ‘00000000’H |
| REPLACE | MACIndx | BY | MAC_Indx |

| ASN.1 Type Constraint Declaration | | | |
|---|---|---|---|
| **Constraint Name** : MACIndex_1 | | | |
| **Structured Type** : MACIndex | | | |
| **Derivation Path** : MACIndex_Resp | | | |
| **Comments** : MAC attribute. | | | |
| **Constraint Value** | | | |
| REPLACE | Resource_Index | BY | ‘00000001’H |
| REPLACE | MACIndx | BY | M_Indx1 |

### 10.3.2.2.3 MAC Address Group Attributes Constraints

| ASN.1 Type Constraint Declaration | | | |
|---|---|---|---|
| **Constraint Name** : MACAddressGrp_Resp | | | |
| **Structured Type** : MACAddressGrp | | | |
| **Derivation Path** : | | | |
| **Comments** : MAC attribute group. | | | |
| **Constraint Value** | | | |
| { | smtaddress | MACSMTAddress_Resp, | |
| | longgrpaddress | MACLongGrpAddress_Resp, | --optional-- |
| | shortgrpaddress | MACShortGrpAddress_Resp | --optional-- } |

| ASN.1 Type Constraint Declaration | | |
|---|---|---|
| **Constraint Name** : MACSMTAddress_Req | | |
| **Structured Type** : MACSMTAddress | | |
| **Derivation Path** : | | |
| **Comments** : MAC attribute. | | |
| **Constraint Value** | | |
| { | Parameter_Type | ‘2029’H, |
| | Parameter_Length | ‘000C’H, |
| | Resource_Index | M_Indx, |
| | PAD2 | OMIT, |
| | SMTAdderss | OMIT } |


Copyright International Organization for Standardization
Provided by IHS under license with ISO
No reproduction or networking permitted without license from IHS
Not for Resale

| ASN.1 Type Constraint Declaration | | |
|---|---|---|
| **Constraint Name** : MACSMTAddress_Resp<br>**Structured Type** : MACSMTAddress<br>**Derivation Path** :<br>**Comments** : MAC attribute. | | |
| **Constraint Value** | | |
| { | Parameter_Type | ‘2029’H, |
| | Parameter_Length | ‘000C’H, |
| | Resource_Index | ?, |
| | PAD2 | PAD_2, |
| | SMTAdderss | IUT_ADDRESS } |

| ASN.1 Type Constraint Declaration |
|---|
| **Constraint Name** : MACSMTAddress_IUT<br>**Structured Type** : MACSMTAddress<br>**Derivation Path** : MACSMTAddress_Resp<br>**Comments** : MAC attribute. |
| **Constraint Value** |
| REPLACE Resource_Index BY M_Indx |

| ASN.1 Type Constraint Declaration | | |
|---|---|---|
| **Constraint Name** : MACLongGrpAddress_Req<br>**Structured Type** : MACLongGrpAddress<br>**Derivation Path** :<br>**Comments** : MAC attribute. This attribute is optional. | | |
| **Constraint Value** | | |
| { | Parameter_Type | ‘202C’H, |
| | Parameter_Length | OMIT, |
| | Resource_Index | M_Indnx, |
| | LongGrpAddress | OMIT } |

| ASN.1 Type Constraint Declaration | | |
|---|---|---|
| **Constraint Name** : MACLongGrpAddress_Resp<br>**Structured Type** : MACLongGrpAddress<br>**Derivation Path** :<br>**Comments** : MAC attribute. This attribute is optional. | | |
| **Constraint Value** | | |
| { | Parameter_Type | ‘202C’H, |
| | Parameter_Length | ?, |
| | Resource_Index | ?, |
| | LongGrpAddress | LongAddressSet_S } |



Copyright International Organization for Standardization
Provided by IHS under license with ISO
No reproduction or networking permitted without license from IHS
Not for Resale

| ASN.1 Type Constraint Declaration | | | |
|---|---|---|---|
| **Constraint Name** : MACLongGrpAddress_IUT<br>**Structured Type** : MACLongGrpAddress<br>**Derivation Path** : MACLongGrpAddress_Resp<br>**Comments** : MAC attribute. This attribute is optional. | | | |
| **Constraint Value** | | | |
| REPLACE | Resource_Index | BY | M_Indx, |
| REPLACE | LongGrpAddress | BY | LongAddressSet_IUT |

| ASN.1 Type Constraint Declaration | | |
|---|---|---|
| **Constraint Name** : MACShortGrpAddress_Req<br>**Structured Type** : MACShortGrpAddress<br>**Derivation Path** :<br>**Comments** : MAC attribute. This attribute is optional. | | |
| **Constraint Value** | | |
| { | Parameter_Type | ‘202D’H, |
| | Parameter_Length | OMIT, |
| | Resource_Index | M_Indx, |
| | ShortGrpAddress | OMIT } |

| ASN.1 Type Constraint Declaration | | |
|---|---|---|
| **Constraint Name** : MACShortGrpAddress_Resp<br>**Structured Type** : MACShortGrpAddress<br>**Derivation Path** :<br>**Comments** : MAC attribute. This attribute is optional. | | |
| **Constraint Value** | | |
| { | Parameter_Type | ‘202D’H, |
| | Parameter_Length | ?, |
| | Resource_Index | ?, |
| | ShortGrpAddress | ShortAddressSet_S } |

| ASN.1 Type Constraint Declaration | | | |
|---|---|---|---|
| **Constraint Name** : MACShortGrpAddress_IUT<br>**Structured Type** : MACShortGrpAddress<br>**Derivation Path** : MACShortGrpAddress_Resp<br>**Comments** : MAC attribute. This attribute is optional. | | | |
| **Constraint Value** | | | |
| REPLACE | Resource_Index | BY | M_Indx, |
| REPLACE | ShortGrpAddress | BY | ShortAddressSet_IUT |



--`,,```,,,,````-`-`,,`,,`,`,,`---
Copyright International Organization for Standardization
Provided by IHS under license with ISO
No reproduction or networking permitted without license from IHS
Not for Resale

#### 10.3.2.2.4 MAC Operation Group Attributes Constraints

| ASN.1 Type Constraint Declaration | |
|---|---|
| **Constraint Name** | : MACOperationGrp_Resp |
| **Structured Type** | : MACOperationGrp |
| **Derivation Path** | : |
| **Comments** | : MAC attribute group. |

**Constraint Value**

```
{       treq            MACT_Req_Resp,
        tneg            MACT_Neg_Resp,
        tmax            MACT_Max_Resp,
        tvxvalue        MACTvxValue_Resp,
        tpri0           MACT_Pri0_Resp,         --optional--
        tpri1           MACT_Pri1_Resp,         --optional--
        tpri2           MACT_Pri2_Resp,         --optional--
        tpri3           MACT_Pri3_Resp,         --optional--
        tpri4           MACT_Pri4_Resp,         --optional--
        tpri5           MACT_Pri5_Resp,         --optional--
        tpri6           MACT_Pri6_Resp          --optional--    }
```

| ASN.1 Type Constraint Declaration | |
|---|---|
| **Constraint Name** | : MACT_Req_Req |
| **Structured Type** | : MACT_Req |
| **Derivation Path** | : |
| **Comments** | : MAC attribute. |

**Constraint Value**

```
{       Parameter_Type          ‘2033’H,
        Parameter_Length        ‘0008’H,
        Resource_Index          M_Indx,
        T_ReqType               OMIT    }
```

| ASN.1 Type Constraint Declaration | |
|---|---|
| **Constraint Name** | : MACT_Req_Resp |
| **Structured Type** | : MACT_Req |
| **Derivation Path** | : |
| **Comments** | : MAC attribute. |

**Constraint Value**

```
{       Parameter_Type          ‘2033’H,
        Parameter_Length        ‘0008’H,
        Resource_Index          ?,
        T_ReqType               ?       }
```



Copyright International Organization for Standardization
Provided by IHS under license with ISO
No reproduction or networking permitted without license from IHS
Not for Resale

| ASN.1 Type Constraint Declaration | | | |
|---|---|---|---|
| **Constraint Name** : MACT_Req_IUT<br>**Structured Type** : MACT_Req<br>**Derivation Path** : MACT_Req_Resp<br>**Comments** : MAC attribute. | | | |
| **Constraint Value** | | | |
| REPLACE | Resource_Index | BY | M_Indx, |
| REPLACE | T_ReqType | BY | INT_TO_HEX(HIGHER_T_BID, 8) |
| --Refer to “INIT_BID” test step in the RMT ATS for HIGHER_T_BID value-- | | | |

| ASN.1 Type Constraint Declaration | | |
|---|---|---|
| **Constraint Name** : MACT_Neg_Req<br>**Structured Type** : MACT_Neg<br>**Derivation Path** :<br>**Comments** : MAC attribute. | | |
| **Constraint Value** | | |
| { | Parameter_Type | ‘2034’H, |
| | Parameter_Length | ‘0008’H, |
| | Resource_Index | M_Indx, |
| | T_NegType | OMIT } |

| ASN.1 Type Constraint Declaration | | |
|---|---|---|
| **Constraint Name** : MACT_Neg_Resp<br>**Structured Type** : MACT_Neg<br>**Derivation Path** :<br>**Comments** : MAC attribute. | | |
| **Constraint Value** | | |
| { | Parameter_Type | ‘2034’H, |
| | Parameter_Length | ‘0008’H, |
| | Resource_Index | ?, |
| | T_NegType | ? } |

| ASN.1 Type Constraint Declaration | | | |
|---|---|---|---|
| **Constraint Name** : MACT_Neg_IUT<br>**Structured Type** : MACT_Neg<br>**Derivation Path** : MACT_Neg_Resp<br>**Comments** : MAC attribute. | | | |
| **Constraint Value** | | | |
| REPLACE | Resource_Index | BY | M_Indx, |
| REPLACE | T_NegType | BY | INT_TO_HEX(HIGHER_T_BID,8) |


Copyright International Organization for Standardization
Provided by IHS under license with ISO
No reproduction or networking permitted without license from IHS
Not for Resale

| ASN.1 Type Constraint Declaration | |
|---|---|
| **Constraint Name** | : MACT_Max_Req |
| **Structured Type** | : MACT_Max |
| **Derivation Path** | : |
| **Comments** | : MAC attribute. |

| Constraint Value | | |
|---|---|---|
| { | Parameter_Type | ‘2035’H, |
| | Parameter_Length | ‘0008’H, |
| | Resource_Index | M_Index, |
| | T_MaxType | OMIT } |

| ASN.1 Type Constraint Declaration | |
|---|---|
| **Constraint Name** | : MACT_Max_Resp |
| **Structured Type** | : MACT_Max |
| **Derivation Path** | : |
| **Comments** | : MAC attribute. |

| Constraint Value | | |
|---|---|---|
| { | Parameter_Type | ‘2035’H, |
| | Parameter_Length | ‘0008’H, |
| | Resource_Index | ?, |
| | T_MaxType | ? } |

| ASN.1 Type Constraint Declaration | |
|---|---|
| **Constraint Name** | : MACT_Max_IUT |
| **Structured Type** | : MACT_Max |
| **Derivation Path** | : MACT_Max_Resp |
| **Comments** | : MAC attribute. |

| Constraint Value | | | |
|---|---|---|---|
| REPLACE | Resource_Index | BY | M_Indx, |
| REPLACE | T_NegType | BY | INT_TO_HEX(TTC(TIME(TSTR_T_Max)),8) |

| ASN.1 Type Constraint Declaration | |
|---|---|
| **Constraint Name** | : MACTvxValue_Req |
| **Structured Type** | : MACTvxValue |
| **Derivation Path** | : |
| **Comments** | : MAC attribute. |

| Constraint Value | | |
|---|---|---|
| { | Parameter_Type | ‘2036’H, |
| | Parameter_Length | ‘0008’H, |
| | Resource_Index | M_Indx, |
| | TvxValueType | OMIT } |



--`,,```,,,,````-`-`,,`,,`,`,,`---
Copyright International Organization for Standardization
Provided by IHS under license with ISO
No reproduction or networking permitted without license from IHS
Not for Resale

| ASN.1 Type Constraint Declaration | | |
|---|---|---|
| **Constraint Name** | : | MACTvxValue_Resp |
| **Structured Type** | : | MACTvxValue |
| **Derivation Path** | : | |
| **Comments** | : | MAC attribute. |

| Constraint Value | | |
|---|---|---|
| { | Parameter_Type | ‘2036’H, |
| | Parameter_Length | ‘0008’H, |
| | Resource_Index | ?, |
| | TvxValueType | ? } |

| ASN.1 Type Constraint Declaration | | |
|---|---|---|
| **Constraint Name** | : | MACTvxValue_IUT |
| **Structured Type** | : | MACTvxValue |
| **Derivation Path** | : | MACTvxValue_Resp |
| **Comments** | : | MAC attribute. |

| Constraint Value | | | |
|---|---|---|---|
| REPLACE | Resource_Index | BY | M_Indx, |
| REPLACE | T_NegType | BY | INT_TO_HEX(TTC(TIME(TSTR_TvxValue)),8) |

| ASN.1 Type Constraint Declaration | | |
|---|---|---|
| **Constraint Name** | : | MACT_Pri0_Req |
| **Structured Type** | : | MACT_Pri |
| **Derivation Path** | : | |
| **Comments** | : | MAC attribute. This attribute is optional. |

| Constraint Value | | |
|---|---|---|
| { | Parameter_Type | ‘2038’H, |
| | Parameter_Length | ‘0008’H, |
| | Resource_Index | M_Indx, |
| | T_PriType | OMIT } |

| ASN.1 Type Constraint Declaration | | |
|---|---|---|
| **Constraint Name** | : | MACT_Pri0_Resp |
| **Structured Type** | : | MACT_Pri |
| **Derivation Path** | : | |
| **Comments** | : | MAC attribute. This attribute is optional. |

| Constraint Value | | |
|---|---|---|
| { | Parameter_Type | ‘2038’H, |
| | Parameter_Length | ?, |
| | Resource_Index | ?, |
| | T_PriType | * } |



Copyright International Organization for Standardization
Provided by IHS under license with ISO
No reproduction or networking permitted without license from IHS Not for Resale

| ASN.1 Type Constraint Declaration | | |
|---|---|---|
| **Constraint Name** : MACT_Pri0_IUT<br>**Structured Type** : MACT_Pri<br>**Derivation Path** :<br>**Comments** : MAC attribute. This attribute is optional. | | |
| **Constraint Value** | | |
| { | Parameter_Type | ‘2038’H, |
| | Parameter_Length | ‘0008’H, |
| | Resource_Index | M_Indx, |
| | T_PriType | INT_TO_HEX(TTC(TIME(T_Pri0)), 8) } |

| ASN.1 Type Constraint Declaration | | |
|---|---|---|
| **Constraint Name** : MACT_Pri1_Req<br>**Structured Type** : MACT_Pri<br>**Derivation Path** :<br>**Comments** : MAC attribute. This attribute is optional. | | |
| **Constraint Value** | | |
| { | Parameter_Type | ‘2039’H, |
| | Parameter_Length | ‘0008’H, |
| | Resource_Index | M_Indx, |
| | T_PriType | OMIT } |

| ASN.1 Type Constraint Declaration | | |
|---|---|---|
| **Constraint Name** : MACT_Pri1_Resp<br>**Structured Type** : MACT_Pri<br>**Derivation Path** :<br>**Comments** : MAC attribute. This attribute is optional. | | |
| **Constraint Value** | | |
| { | Parameter_Type | ‘2039’H, |
| | Parameter_Length | ?, |
| | Resource_Index | ?, |
| | T_PriType | * } |

| ASN.1 Type Constraint Declaration | | |
|---|---|---|
| **Constraint Name** : MACT_Pri1_IUT<br>**Structured Type** : MACT_Pri<br>**Derivation Path** :<br>**Comments** : MAC attribute. This attribute is optional. | | |
| **Constraint Value** | | |
| { | Parameter_Type | ‘2039’H, |
| | Parameter_Length | ‘0008’H, |
| | Resource_Index | M_Indx, |
| | T_PriType | INT_TO_HEX(TTC(TIME(T_Pri1)), 8) } |



Copyright International Organization for Standardization
Provided by IHS under license with ISO
No reproduction or networking permitted without license from IHS
Not for Resale

| ASN.1 Type Constraint Declaration | |
|---|---|
| **Constraint Name** | : MACT_Pri2_Req |
| **Structured Type** | : MACT_Pri |
| **Derivation Path** | : |
| **Comments** | : MAC attribute. This attribute is optional. |

| Constraint Value | | |
|---|---|---|
| { | Parameter_Type | ‘203A’H, |
| | Parameter_Length | ‘0008’H, |
| | Resource_Index | M_Indx, |
| | T_PriType | OMIT } |

| ASN.1 Type Constraint Declaration | |
|---|---|
| **Constraint Name** | : MACT_Pri2_Resp |
| **Structured Type** | : MACT_Pri |
| **Derivation Path** | : |
| **Comments** | : MAC attribute. This attribute is optional. |

| Constraint Value | | |
|---|---|---|
| { | Parameter_Type | ‘203A’H, |
| | Parameter_Length | ?, |
| | Resource_Index | ?, |
| | T_PriType | * } |

| ASN.1 Type Constraint Declaration | |
|---|---|
| **Constraint Name** | : MACT_Pri2_IUT |
| **Structured Type** | : MACT_Pri |
| **Derivation Path** | : |
| **Comments** | : MAC attribute. This attribute is optional. |

| Constraint Value | | |
|---|---|---|
| { | Parameter_Type | ‘203A’H, |
| | Parameter_Length | ‘0008’H, |
| | Resource_Index | M_Indx, |
| | T_PriType | INT_TO_HEX(TTC(TIME(T_Pri2)), 8) } |

| ASN.1 Type Constraint Declaration | |
|---|---|
| **Constraint Name** | : MACT_Pri3_Req |
| **Structured Type** | : MACT_Pri |
| **Derivation Path** | : |
| **Comments** | : MAC attribute. This attribute is optional. |

| Constraint Value | | |
|---|---|---|
| { | Parameter_Type | ‘203B’H, |
| | Parameter_Length | ‘0008’H, |
| | Resource_Index | M_Indx, |
| | T_PriType | OMIT } |


Copyright International Organization for Standardization
Provided by IHS under license with ISO
No reproduction or networking permitted without license from IHS Not for Resale

| ASN.1 Type Constraint Declaration | | |
|---|---|---|
| **Constraint Name** : MACT_Pri3_Resp<br>**Structured Type** : MACT_Pri<br>**Derivation Path** :<br>**Comments** : MAC attribute. This attribute is optional. | | |
| **Constraint Value** | | |
| { | Parameter_Type | ‘203B’H, |
| | Parameter_Length | ?, |
| | Resource_Index | ?, |
| | T_PriType | * } |

| ASN.1 Type Constraint Declaration | | |
|---|---|---|
| **Constraint Name** : MACT_Pri3_IUT<br>**Structured Type** : MACT_Pri<br>**Derivation Path** :<br>**Comments** : MAC attribute. This attribute is optional. | | |
| **Constraint Value** | | |
| { | Parameter_Type | ‘203B’H, |
| | Parameter_Length | ‘0008’H, |
| | Resource_Index | M_Indx, |
| | T_PriType | INT_TO_HEX(TTC(TIME(T_Pri3)), 8) } |

| ASN.1 Type Constraint Declaration | | |
|---|---|---|
| **Constraint Name** : MACT_Pri4_Req<br>**Structured Type** : MACT_Pri<br>**Derivation Path** :<br>**Comments** : MAC attribute. This attribute is optional. | | |
| **Constraint Value** | | |
| { | Parameter_Type | ‘203C’H, |
| | Parameter_Length | ‘0008’H, |
| | Resource_Index | M_Indx, |
| | T_PriType | OMIT } |

| ASN.1 Type Constraint Declaration | | |
|---|---|---|
| **Constraint Name** : MACT_Pri4_Resp<br>**Structured Type** : MACT_Pri<br>**Derivation Path** :<br>**Comments** :+MAC attribute. This attribute is optional. | | |
| **Constraint Value** | | |
| { | Parameter_Type | ‘203C’H, |
| | Parameter_Length | ?, |
| | Resource_Index | ?, |
| | T_PriType | * } |



Copyright International Organization for Standardization
Provided by IHS under license with ISO
No reproduction or networking permitted without license from IHS
Not for Resale

| ASN.1 Type Constraint Declaration | | |
|---|---|---|
| **Constraint Name** : MACT_Pri4_IUT<br>**Structured Type** : MACT_Pri<br>**Derivation Path** :<br>**Comments** : MAC attribute. This attribute is optional. | | |
| **Constraint Value** | | |
| { | Parameter_Type | ‘203C’H, |
| | Parameter_Length | ‘0008’H, |
| | Resource_Index | M_Indx, |
| | T_PriType | INT_TO_HEX(TTC(TIME(T_Pri4)), 8) } |

| ASN.1 Type Constraint Declaration | | |
|---|---|---|
| **Constraint Name** : MACT_Pri5_Req<br>**Structured Type** : MACT_Pri<br>**Derivation Path** :<br>**Comments** : MAC attribute. This attribute is optional. | | |
| **Constraint Value** | | |
| { | Parameter_Type | ‘203D’H, |
| | Parameter_Length | ‘0008’H, |
| | Resource_Index | M_Indx, |
| | T_PriType | OMIT } |

| ASN.1 Type Constraint Declaration | | |
|---|---|---|
| **Constraint Name** : MACT_Pri5_Resp<br>**Structured Type** : MACT_Pri<br>**Derivation Path** :<br>**Comments** : MAC attribute. This attribute is optional. | | |
| **Constraint Value** | | |
| { | Parameter_Type | ‘203D’H, |
| | Parameter_Length | ?, |
| | Resource_Index | ?, |
| | T_PriType | * } |

| ASN.1 Type Constraint Declaration | | |
|---|---|---|
| **Constraint Name** : MACT_Pri5_IUT<br>**Structured Type** : MACT_Pri<br>**Derivation Path** :<br>**Comments** : MAC attribute. This attribute is optional. | | |
| **Constraint Value** | | |
| { | Parameter_Type | ‘203D’H, |
| | Parameter_Length | ‘0008’H, |
| | Resource_Index | M_Idnx, |
| | T_PriType | INT_TO_HEX(TTC(TIME(T_Pri5)), 8) } |



--`,,```,,,,````-`-`,,`,,`,`,,`---
Copyright International Organization for Standardization
Provided by IHS under license with ISO
No reproduction or networking permitted without license from IHS
Not for Resale

| ASN.1 Type Constraint Declaration | |
|---|---|
| **Constraint Name** | : MACT_Pri6_Req |
| **Structured Type** | : MACT_Pri |
| **Derivation Path** | : |
| **Comments** | : MAC attribute. This attribute is optional. |

| Constraint Value | | |
|---|---|---|
| { | Parameter_Type | ‘203E’H, |
| | Parameter_Length | ‘0008’H, |
| | Resource_Index | M_Indx, |
| | T_PriType | OMIT } |

| ASN.1 Type Constraint Declaration | |
|---|---|
| **Constraint Name** | : MACT_Pri6_Resp |
| **Structured Type** | : MACT_Pri |
| **Derivation Path** | : |
| **Comments** | : MAC attribute. This attribute is optional. |

| Constraint Value | | |
|---|---|---|
| { | Parameter_Type | ‘203E’H, |
| | Parameter_Length | ?, |
| | Resource_Index | ?, |
| | T_PriType | * } |

| ASN.1 Type Constraint Declaration | |
|---|---|
| **Constraint Name** | : MACT_Pri6_IUT |
| **Structured Type** | : MACT_Pri |
| **Derivation Path** | : |
| **Comments** | : MAC attribute. This attribute is optional. |

| Constraint Value | | |
|---|---|---|
| { | Parameter_Type | ‘203E’H, |
| | Parameter_Length | ‘0008’H, |
| | Resource_Index | M_Indx, |
| | T_PriType | INT_TO_HEX(TTC(TIME(T_Pri6)), 8) } |



Copyright International Organization for Standardization
Provided by IHS under license with ISO
No reproduction or networking permitted without license from IHS
Not for Resale

### 10.3.2.2.5 MAC Counters Group Attributes Constraints

| ASN.1 Type Constraint Declaration | | | |
|---|---|---|---|
| **Constraint Name** : MACCountersGrp_Resp | | | |
| **Structured Type** : MACCountersGrp | | | |
| **Derivation Path** : | | | |
| **Comments** : MAC attribute group. | | | |
| **Constraint Value** | | | |
| { | framect | MACFrame_Ct_Resp, | |
| | copiedct | MACCopied_Ct_Resp, | |
| | transmitct | MACTransmit_Ct_Resp, | |
| | tokenct | MACToken_Ct_Resp, | --optional-- |
| | errorct | MACError_Ct_Resp, | |
| | lostct | MACLost_Ct_Resp, | |
| | tvxexpiredct | MACTvxExpired_Ct_Resp, | --optional-- |
| | notcopiedct | MACNotCopied_Ct_Resp, | --optional-- |
| | latect | MACLate_Ct_Resp, | --optional-- |
| | ringopct | MACRingOp_Ct_Resp | --optional-- } |

| ASN.1 Type Constraint Declaration | | |
|---|---|---|
| **Constraint Name** : MACFrame_Ct_Req | | |
| **Structured Type** : MACFrame_Ct | | |
| **Derivation Path** : | | |
| **Comments** : MAC attribute. | | |
| **Constraint Value** | | |
| { | Parameter_Type | ‘2047’H, |
| | Parameter_Length | ‘0008’H, |
| | Resource_Index | M_Indx, |
| | Frame_Ct | OMIT } |

| ASN.1 Type Constraint Declaration | | |
|---|---|---|
| **Constraint Name** : MACFrame_Ct_Resp | | |
| **Structured Type** : MACFrame_Ct | | |
| **Derivation Path** : | | |
| **Comments** : MAC attribute. | | |
| **Constraint Value** | | |
| { | Parameter_Type | ‘2047’H, |
| | Parameter_Length | ‘0008’H, |
| | Resource_Index | ?, |
| | Frame_Ct | ? } |


Copyright International Organization for Standardization
Provided by IHS under license with ISO
No reproduction or networking permitted without license from IHS Not for Resale

| ASN.1 Type Constraint Declaration | | | |
|---|---|---|---|
| **Constraint Name** : MACFrame_Ct_IUT1 | | | |
| **Structured Type** : MACFrame_Ct | | | |
| **Derivation Path** : MACFrame_Ct_Resp | | | |
| **Comments** : MAC attribute. | | | |
| **Constraint Value** | | | |
| REPLACE | Resource_Index | BY | M_Indx, |
| REPLACE | Frame_Ct | BY | FRM_CT1 |

| ASN.1 Type Constraint Declaration | | | |
|---|---|---|---|
| **Constraint Name** : MACFrame_Ct_IUT2 | | | |
| **Structured Type** : MACFrame_Ct | | | |
| **Derivation Path** : MACFrame_Ct_Resp | | | |
| **Comments** : MAC attribute. | | | |
| **Constraint Value** | | | |
| REPLACE | Resource_Index | BY | M_Indx, |
| REPLACE | Frame_Ct | BY | FRM_CT2 |

| ASN.1 Type Constraint Declaration | | |
|---|---|---|
| **Constraint Name** : MACCopied_Ct_Req | | |
| **Structured Type** : MACCopied_Ct | | |
| **Derivation Path** : | | |
| **Comments** : MAC attribute. | | |
| **Constraint Value** | | |
| { | Parameter_Type | ‘2048’H, |
| | Parameter_Length | ‘0008’H, |
| | Resource_Index | M_Indx, |
| | Copied_Ct | OMIT } |

| ASN.1 Type Constraint Declaration | | |
|---|---|---|
| **Constraint Name** : MACCopied_Ct_Resp | | |
| **Structured Type** : MACCopied_Ct | | |
| **Derivation Path** : | | |
| **Comments** : MAC attribute. | | |
| **Constraint Value** | | |
| { | Parameter_Type | ‘2048’H, |
| | Parameter_Length | ‘0008’H, |
| | Resource_Index | ?, |
| | Copied_Ct | ? } |



Copyright International Organization for Standardization
Provided by IHS under license with ISO
No reproduction or networking permitted without license from IHS
Not for Resale

| ASN.1 Type Constraint Declaration | | | |
|---|---|---|---|
| **Constraint Name** : MACCopied_Ct_IUT1 | | | |
| **Structured Type** : MACCopied_Ct | | | |
| **Derivation Path** : MACCopied_Ct_Resp | | | |
| **Comments** : MAC attribute. | | | |
| **Constraint Value** | | | |
| REPLACE | Resource_Index | BY | M_Indx, |
| REPLACE | Copied_Ct | BY | CP_CT1 |

| ASN.1 Type Constraint Declaration | | | |
|---|---|---|---|
| **Constraint Name** : MACCopied_Ct_IUT2 | | | |
| **Structured Type** : MACCopied_Ct | | | |
| **Derivation Path** : MACCopied_Ct_Resp | | | |
| **Comments** : MAC attribute. | | | |
| **Constraint Value** | | | |
| REPLACE | Resource_Index | BY | M_Indx, |
| REPLACE | Copied_Ct | BY | CP_CT2 |

| ASN.1 Type Constraint Declaration | | |
|---|---|---|
| **Constraint Name** : MACTransmit_Ct_Req | | |
| **Structured Type** : MACTransmit_Ct | | |
| **Derivation Path** : | | |
| **Comments** : MAC attribute. | | |
| **Constraint Value** | | |
| { | Parameter_Type | ‘2049’H, |
| | Parameter_Length | ‘0008’H, |
| | Resource_Index | M_Indx, |
| | Transmit_Ct | OMIT } |

| ASN.1 Type Constraint Declaration | | |
|---|---|---|
| **Constraint Name** : MACTransmit_Ct_Resp | | |
| **Structured Type** : MACTransmit_Ct | | |
| **Derivation Path** : | | |
| **Comments** : MAC attribute. | | |
| **Constraint Value** | | |
| { | Parameter_Type | ‘2049’H, |
| | Parameter_Length | ‘0008’H, |
| | Resource_Index | ?, |
| | Transmit_Ct | ? } |

--`,,```,,,,````-`-`,,`,,`,`,,`---



Copyright International Organization for Standardization
Provided by IHS under license with ISO
No reproduction or networking permitted without license from IHS
Not for Resale

| ASN.1 Type Constraint Declaration | | | |
|---|---|---|---|
| **Constraint Name** : MACTransmit_Ct_IUT1 | | | |
| **Structured Type** : MACTransmit_Ct | | | |
| **Derivation Path** : MACTransmit_Ct_Resp | | | |
| **Comments** : MAC attribute. | | | |
| **Constraint Value** | | | |
| REPLACE | Resource_Index | BY | M_Indx, |
| REPLACE | Transmit_Ct | BY | XMIT_CT1 |

| ASN.1 Type Constraint Declaration | | | |
|---|---|---|---|
| **Constraint Name** : MACTransmit_Ct_IUT2 | | | |
| **Structured Type** : MACTransmit_Ct | | | |
| **Derivation Path** : MACTransmit_Ct_Resp | | | |
| **Comments** : MAC attribute. | | | |
| **Constraint Value** | | | |
| REPLACE | Resource_Index | BY | M_Indx, |
| REPLACE | Transmit_Ct | BY | XMIT_CT2 |

| ASN.1 Type Constraint Declaration | | |
|---|---|---|
| **Constraint Name** : MACToken_Ct_Req | | |
| **Structured Type** : MACToken_Ct | | |
| **Derivation Path** : | | |
| **Comments** : MAC attribute. This attribute is optional. | | |
| **Constraint Value** | | |
| { | Parameter_Type | ‘204A’H, |
| | Parameter_Length | ‘0008’H, |
| | Resource_Index | M_Indx, |
| | Token_Ct | OMIT } |

| ASN.1 Type Constraint Declaration | | |
|---|---|---|
| **Constraint Name** : MACToken_Ct_Resp | | |
| **Structured Type** : MACToken_Ct | | |
| **Derivation Path** : | | |
| **Comments** : MAC attribute. This attribute is optional. | | |
| **Constraint Value** | | |
| { | Parameter_Type | ‘204A’H, |
| | Parameter_Length | ?, |
| | Resource_Index | ?, |
| | Token_Ct | * } |



Copyright International Organization for Standardization
Provided by IHS under license with ISO
No reproduction or networking permitted without license from IHS
Not for Resale

| ASN.1 Type Constraint Declaration | | |
|---|---|---|
| **Constraint Name** : MACToken_Ct_IUT1 | | |
| **Structured Type** : MACToken_Ct | | |
| **Derivation Path** : | | |
| **Comments** : MAC attribute. This attribute is optional. | | |
| **Constraint Value** | | |
| { | Parameter_Type | ‘204A’H, |
| | Parameter_Length | ‘0008’H, |
| | Resource_Index | M_Indx, |
| | Token_Ct | TK_CT1 } |

| ASN.1 Type Constraint Declaration | | | |
|---|---|---|---|
| **Constraint Name** : MACToken_Ct_IUT2 | | | |
| **Structured Type** : MACToken_Ct | | | |
| **Derivation Path** : MACToken_Ct_IUT1 | | | |
| **Comments** : MAC attribute. This attribute is optional. | | | |
| **Constraint Value** | | | |
| REPLACE | Token_Ct | BY | TK_CT2 |

| ASN.1 Type Constraint Declaration | | |
|---|---|---|
| **Constraint Name** : MACError_Ct_Req | | |
| **Structured Type** : MACError_Ct | | |
| **Derivation Path** : | | |
| **Comments** : MAC attribute. | | |
| **Constraint Value** | | |
| { | Parameter_Type | ‘2051’H, |
| | Parameter_Length | ‘0008’H, |
| | Resource_Index | M_Indx, |
| | Error_Ct | OMIT } |

| ASN.1 Type Constraint Declaration | | |
|---|---|---|
| **Constraint Name** : MACError_Ct_Resp | | |
| **Structured Type** : MACError_Ct | | |
| **Derivation Path** : | | |
| **Comments** : MAC attribute. | | |
| **Constraint Value** | | |
| { | Parameter_Type | ‘2051’H, |
| | Parameter_Length | ‘0008’H, |
| | Resource_Index | ?, |
| | Error_Ct | ? } |


--`,,```,,,,````-`-`,,`,,`,`,,`---
Copyright International Organization for Standardization
Provided by IHS under license with ISO
No reproduction or networking permitted without license from IHS
Not for Resale

| ASN.1 Type Constraint Declaration | | | |
|---|---|---|---|
| **Constraint Name** : MACError_Ct_IUT1 | | | |
| **Structured Type** : MACError_Ct | | | |
| **Derivation Path** : MACError_Ct_Resp | | | |
| **Comments** : MAC attribute. | | | |
| **Constraint Value** | | | |
| REPLACE | Resource_Index | BY | M_Indx, |
| REPLACE | Error_Ct | BY | ER_CT1 |

| ASN.1 Type Constraint Declaration | | | |
|---|---|---|---|
| **Constraint Name** : MACError_Ct_IUT2 | | | |
| **Structured Type** : MACError_Ct | | | |
| **Derivation Path** : MACError_Ct_Resp | | | |
| **Comments** : MAC attribute. | | | |
| **Constraint Value** | | | |
| REPLACE | Resource_Index | BY | M_Indx, |
| REPLACE | Error_Ct | BY | ER_CT2 |

| ASN.1 Type Constraint Declaration | | |
|---|---|---|
| **Constraint Name** : MACLost_Ct_Req | | |
| **Structured Type** : MACLost_Ct | | |
| **Derivation Path** : | | |
| **Comments** : MAC attribute. | | |
| **Constraint Value** | | |
| { | Parameter_Type | ‘2052’H, |
| | Parameter_Length | ‘0008’H, |
| | Resource_Index | M_Indx, |
| | Lost_Ct | OMIT } |

| ASN.1 Type Constraint Declaration | | |
|---|---|---|
| **Constraint Name** : MACLost_Ct_Resp | | |
| **Structured Type** : MACLost_Ct | | |
| **Derivation Path** : | | |
| **Comments** : MAC attribute. | | |
| **Constraint Value** | | |
| { | Parameter_Type | ‘2052’H, |
| | Parameter_Length | ‘0008’H, |
| | Resource_Index | ?, |
| | Lost_Ct | ? } |



Copyright International Organization for Standardization
Provided by IHS under license with ISO
No reproduction or networking permitted without license from IHS
Not for Resale

| ASN.1 Type Constraint Declaration | | | |
|---|---|---|---|
| **Constraint Name** : MACLost_Ct_IUT1<br>**Structured Type** : MACLost_Ct<br>**Derivation Path** : MACLost_Ct_Resp<br>**Comments** : MAC attribute. | | | |
| **Constraint Value** | | | |
| REPLACE | Resource_Index | BY | M_Indx, |
| REPLACE | Lost_Ct | BY | LST_CT1 |

| ASN.1 Type Constraint Declaration | | | |
|---|---|---|---|
| **Constraint Name** : MACLost_Ct_IUT2<br>**Structured Type** : MACLost_Ct<br>**Derivation Path** : MACLost_Ct_Resp<br>**Comments** : MAC attribute. | | | |
| **Constraint Value** | | | |
| REPLACE | Resource_Index | BY | M_Indx, |
| REPLACE | Lost_Ct | BY | LST_CT2 |

| ASN.1 Type Constraint Declaration | | |
|---|---|---|
| **Constraint Name** : MACTvxExpired_Ct_Req<br>**Structured Type** : MACTvxExpired_Ct<br>**Derivation Path** :<br>**Comments** : MAC attribute. This attribute is optional. | | |
| **Constraint Value** | | |
| { | Parameter_Type | ‘2053’H, |
| | Parameter_Length | ‘0008’H, |
| | Resource_Index | M_Indx, |
| | TvxExpired_Ct | OMIT } |

| ASN.1 Type Constraint Declaration | | |
|---|---|---|
| **Constraint Name** : MACTvxExpired_Ct_Resp<br>**Structured Type** : MACTvxExpired_Ct<br>**Derivation Path** :<br>**Comments** : MAC attribute. This attribute is optional. | | |
| **Constraint Value** | | |
| { | Parameter_Type | ‘2053’H, |
| | Parameter_Length | ?, |
| | Resource_Index | ?, |
| | TvxExpired_Ct | * } |



--`,,```,,,,````-`-`,,`,,`,`,,`---
Copyright International Organization for Standardization
Provided by IHS under license with ISO
No reproduction or networking permitted without license from IHS
Not for Resale

| ASN.1 Type Constraint Declaration | | |
|---|---|---|
| **Constraint Name** : MACTvxExpired_Ct_IUT1 | | |
| **Structured Type** : MACTvxExpired_Ct | | |
| **Derivation Path** : | | |
| **Comments** : MAC attribute. This attribute is optional. | | |
| **Constraint Value** | | |
| { | Parameter_Type | ‘2053’H, |
| | Parameter_Length | ‘0008’H, |
| | Resource_Index | M_Indx, |
| | TvxExpired_Ct | TE_CT1 } |

| ASN.1 Type Constraint Declaration | | |
|---|---|---|
| **Constraint Name** : MACTvxExpired_Ct_IUT2 | | |
| **Structured Type** : MACTvxExpired_Ct | | |
| **Derivation Path** : MACTvxExpired_Ct_IUT1 | | |
| **Comments** : MAC attribute. This attribute is optional. | | |
| **Constraint Value** | | |
| REPLACE | TvxExpired_Ct BY | TE_CT2 |

| ASN.1 Type Constraint Declaration | | |
|---|---|---|
| **Constraint Name** : MACNotCopied_Ct_Resp | | |
| **Structured Type** : MACNotCopied_Ct | | |
| **Derivation Path** : | | |
| **Comments** : MAC attribute. This attribute is optional. | | |
| **Constraint Value** | | |
| { | Parameter_Type | ‘2054’H, |
| | Parameter_Length | ?, |
| | Resource_Index | ?, |
| | NotCopied_Ct | * } |

| ASN.1 Type Constraint Declaration | | |
|---|---|---|
| **Constraint Name** : MACLate_Ct_Req | | |
| **Structured Type** : MACLate_Ct | | |
| **Derivation Path** : | | |
| **Comments** : MAC attribute. This attribute is optional. | | |
| **Constraint Value** | | |
| { | Parameter_Type | ‘2055’H, |
| | Parameter_Length | ‘0008’H, |
| | Resource_Index | M_Indx, |
| | Late_Ct | OMIT } |



Copyright International Organization for Standardization
Provided by IHS under license with ISO
No reproduction or networking permitted without license from IHS
Not for Resale

| ASN.1 Type Constraint Declaration | |
|---|---|
| **Constraint Name** | : MACLate_Ct_Resp |
| **Structured Type** | : MACLate_Ct |
| **Derivation Path** | : |
| **Comments** | : MAC attribute. This attribute is optional. |

| Constraint Value | | |
|---|---|---|
| { | Parameter_Type | ‘2055’H, |
| | Parameter_Length | ?, |
| | Resource_Index | ?, |
| | Late_Ct | * } |

| ASN.1 Type Constraint Declaration | |
|---|---|
| **Constraint Name** | : MACLate_Ct_IUT1 |
| **Structured Type** | : MACLate_Ct |
| **Derivation Path** | : |
| **Comments** | : MAC attribute. This attribute is optional. |

| Constraint Value | | |
|---|---|---|
| { | Parameter_Type | ‘2055’H, |
| | Parameter_Length | ‘0008’H, |
| | Resource_Index | M_Indx, |
| | Late_Ct | LT_CT1 } |

| ASN.1 Type Constraint Declaration | |
|---|---|
| **Constraint Name** | : MACLate_Ct_IUT2 |
| **Structured Type** | : MACLate_Ct |
| **Derivation Path** | : MACLate_Ct_IUT1 |
| **Comments** | : MAC attribute. This attribute is optional. |

| Constraint Value | | | |
|---|---|---|---|
| REPLACE | Late_Ct | BY | LT_CT2 |

| ASN.1 Type Constraint Declaration | |
|---|---|
| **Constraint Name** | : MACRingOp_Ct_Resp |
| **Structured Type** | : MACRingOp_Ct |
| **Derivation Path** | : |
| **Comments** | : MAC attribute. This attribute is optional. |

| Constraint Value | | |
|---|---|---|
| { | Parameter_Type | ‘2056’H, |
| | Parameter_Length | ?, |
| | Resource_Index | ?, |
| | RingOp_Ct | * } |


Copyright International Organization for Standardization
Provided by IHS under license with ISO
No reproduction or networking permitted without license from IHS
Not for Resale

#### 10.3.2.2.6 MAC Frame Error Condition Group Attributes Constraints

| ASN.1 Type Constraint Declaration | | |
|---|---|---|
| **Constraint Name** | : | MACFrameErrorConditionGrp_Resp |
| **Structured Type** | : | MACFrameErrorConditionGrp |
| **Derivation Path** | : | |
| **Comments** | : | MAC attribute group. |

| Constraint Value | | |
|---|---|---|
| { | frameerrorthreshold | MACFrameErrorThreshold_Resp, |
| | frameerrorratio | MACFrameErrorRatio_Resp } |

| ASN.1 Type Constraint Declaration | | |
|---|---|---|
| **Constraint Name** | : | MACFrameErrorThreshold_Resp |
| **Structured Type** | : | MACFrameErrorThreshold |
| **Derivation Path** | : | |
| **Comments** | : | MAC attribute. |

| Constraint Value | | |
|---|---|---|
| { | Parameter_Type | ‘205F’H, |
| | Parameter_Length | ‘0008’H, |
| | Resource_Index | ?, |
| | PAD2 | PAD_2, |
| | FrameErrorThreshold | ? } |

| ASN.1 Type Constraint Declaration | | |
|---|---|---|
| **Constraint Name** | : | MACFrameErrorRatio_Resp |
| **Structured Type** | : | MACFrameErrorRatio |
| **Derivation Path** | : | |
| **Comments** | : | MAC attribute. |

| Constraint Value | | |
|---|---|---|
| { | Parameter_Type | ‘2060’H, |
| | Parameter_Length | ‘0008’H, |
| | Resource_Index | ?, |
| | PAD2 | PAD_2, |
| | FrameErrorRatio | ? } |



Copyright International Organization for Standardization
Provided by IHS under license with ISO
No reproduction or networking permitted without license from IHS
Not for Resale

### 10.3.2.2.7 MAC Not Copied Condition Group Attributes Constraints

| ASN.1 Type Constraint Declaration | | | |
|---|---|---|---|
| **Constraint Name** : MACNotCopiedConditionGrp_Resp<br>**Structured Type** : MACNotCopiedConditionGrp<br>**Derivation Path** :<br>**Comments** : MAC attribute group. | | | |
| **Constraint Value** | | | |
| { | notcopiedthreshold | MACNotCopiedThreshold_Resp, | --optional-- |
| | notcopiedratio | MACNotCopiedRatio_Resp | --optional-- } |

| ASN.1 Type Constraint Declaration | | |
|---|---|---|
| **Constraint Name** : MACNotCopiedThreshold_Resp<br>**Structured Type** : MACNotCopiedThreshold<br>**Derivation Path** :<br>**Comments** : MAC attribute. This attribute is optional. | | |
| **Constraint Value** | | |
| { | Parameter_Type | ‘2067’H, |
| | Parameter_Length | ?, |
| | Resource_Index | ?, |
| | PAD2 | *, |
| | NotCopiedThreshold | * } |

| ASN.1 Type Constraint Declaration | | |
|---|---|---|
| **Constraint Name** : MACNotCopiedRatio_Resp<br>**Structured Type** : MACNotCopiedRatio<br>**Derivation Path** :<br>**Comments** : MAC attribute. This attribute is optional. | | |
| **Constraint Value** | | |
| { | Parameter_Type | ‘2069’H, |
| | Parameter_Length | ?, |
| | Resource_Index | ?, |
| | PAD2 | *, |
| | NotCopiedRatio * | } |


Copyright International Organization for Standardization
Provided by IHS under license with ISO
No reproduction or networking permitted without license from IHS
Not for Resale

### 10.3.2.2.8 MAC Status Group Attributes Constraints

| ASN.1 Type Constraint Declaration | | |
|---|---|---|
| **Constraint Name** | : | MACStatusGrp_Resp |
| **Structured Type** | : | MACStatusGrp |
| **Derivation Path** | : | |
| **Comments** | : | MAC attribute group. |

| Constraint Value | | |
|---|---|---|
| { | rmtstate | MACRMTState_Resp, |
| | daflag | MACDA_Flag_Resp, |
| | undaflag | MACUNDA_Flag_Resp, |
| | frameerrorflag | MACFrameErrorFlag_Resp, |
| | notcopiedflag | MACNotCopiedFlag_Resp, --optional-- |
| | unitdataavailable | MACUnitDataAvailable_Resp, |
| | hardwarepresent | MACHardwarePresent_Resp, |
| | maunitdataavailable | MACMA_UnitdataEnable_Resp } |

| ASN.1 Type Constraint Declaration | | |
|---|---|---|
| **Constraint Name** | : | MACRMTState_Req |
| **Structured Type** | : | MACRMTState |
| **Derivation Path** | : | |
| **Comments** | : | MAC attribute. |

| Constraint Value | | |
|---|---|---|
| { | Parameter_Type | ‘206F’H, |
| | Parameter_Length | ‘0008’H, |
| | Resource_Index | OMIT, |
| | PAD2 | OMIT, |
| | RMTStateType | OMIT } |

| ASN.1 Type Constraint Declaration | | |
|---|---|---|
| **Constraint Name** | : | MACRMTState_Resp |
| **Structured Type** | : | MACRMTState |
| **Derivation Path** | : | |
| **Comments** | : | MAC attribute. |

| Constraint Value | | |
|---|---|---|
| { | Parameter_Type | ‘206F’H, |
| | Parameter_Length | ‘0008’H, |
| | Resource_Index | ?, |
| | PAD2 | PAD_2, |
| | RMTStateType | RMTState_Q } |

--`,,```,,,,````-`-`,,`,,`,`,,`---



Copyright International Organization for Standardization
Provided by IHS under license with ISO
No reproduction or networking permitted without license from IHS
Not for Resale

| ASN.1 Type Constraint Declaration | | |
|---|---|---|
| **Constraint Name** | : | MACRMTState_IUT |
| **Structured Type** | : | MACRMTState |
| **Derivation Path** | : | MACRMTState_Resp |
| **Comments** | : | MAC attribute. |

| Constraint Value | | |
|---|---|---|
| REPLACE | RMTStateType BY | RMTState_2 |

| ASN.1 Type Constraint Declaration | | |
|---|---|---|
| **Constraint Name** | : | MACDA_Flag_Req |
| **Structured Type** | : | MACDA_Flag |
| **Derivation Path** | : | |
| **Comments** | : | MAC attribute. |

| Constraint Value | | |
|---|---|---|
| { | Parameter_Type | '2070'H, |
| | Parameter_Length | '0008'H, |
| | Resource_Index | OMIT, |
| | PAD3 | OMIT, |
| | DA_Flag | OMIT } |

| ASN.1 Type Constraint Declaration | | |
|---|---|---|
| **Constraint Name** | : | MACDA_Flag_Resp |
| **Structured Type** | : | MACDA_Flag |
| **Derivation Path** | : | |
| **Comments** | : | MAC attribute. |

| Constraint Value | | |
|---|---|---|
| { | Parameter_Type | '2070'H, |
| | Parameter_Length | '0008'H, |
| | Resource_Index | ?, |
| | PAD3 | PAD_3, |
| | DA_Flag | ? } |

| ASN.1 Type Constraint Declaration | | |
|---|---|---|
| **Constraint Name** | : | MACDA_Flag_IUT |
| **Structured Type** | : | MACDA_Flag |
| **Derivation Path** | : | MACDA_Flag_Resp |
| **Comments** | : | MAC attribute. |

| Constraint Value | | |
|---|---|---|
| REPLACE | DA_Flag | BY FALSE |



Copyright International Organization for Standardization
Provided by IHS under license with ISO
No reproduction or networking permitted without license from IHS
Not for Resale

| ASN.1 Type Constraint Declaration | | |
|---|---|---|
| **Constraint Name** | : | MACUNDA_Flag_Req |
| **Structured Type** | : | MACUNDA_Flag |
| **Derivation Path** | : | |
| **Comments** | : | MAC attribute. |

| Constraint Value | | |
|---|---|---|
| { | Parameter_Type | '2071'H, |
| | Parameter_Length | '0008'H, |
| | Resource_Index | OMIT, |
| | PAD3 | OMIT, |
| | UNDA_Flag | OMIT } |

| ASN.1 Type Constraint Declaration | | |
|---|---|---|
| **Constraint Name** | : | MACUNDA_Flag_Resp |
| **Structured Type** | : | MACUNDA_Flag |
| **Derivation Path** | : | |
| **Comments** | : | MAC attribute. |

| Constraint Value | | |
|---|---|---|
| { | Parameter_Type | '2071'H, |
| | Parameter_Length | '0008'H, |
| | Resource_Index | ?, |
| | PAD3 | PAD_3, |
| | UNDA_Flag | ? } |

| ASN.1 Type Constraint Declaration | | |
|---|---|---|
| **Constraint Name** | : | MACUNDA_Flag_IUT1 |
| **Structured Type** | : | MACUNDA_Flag |
| **Derivation Path** | : | MACUNDA_Flag_Resp |
| **Comments** | : | MAC attribute. |

| Constraint Value | | | |
|---|---|---|---|
| REPLACE | UNDA_Flag | BY | FALSE |

| ASN.1 Type Constraint Declaration | | |
|---|---|---|
| **Constraint Name** | : | MACUNDA_Flag_IUT2 |
| **Structured Type** | : | MACUNDA_Flag |
| **Derivation Path** | : | MACUNDA_Flag_Resp |
| **Comments** | : | MAC attribute. |

| Constraint Value | | | |
|---|---|---|---|
| REPLACE | UNDA_Flag | BY | TRUE |



Copyright International Organization for Standardization
Provided by IHS under license with ISO
No reproduction or networking permitted without license from IHS
Not for Resale

| ASN.1 Type Constraint Declaration | | |
|---|---|---|
| **Constraint Name** : MACFrameErrorFlag_Req<br>**Structured Type** : MACFrameErrorFlag<br>**Derivation Path** :<br>**Comments** : MAC attribute. | | |
| **Constraint Value** | | |
| { | Parameter_Type | ‘2072’H, |
| | Parameter_Length | ‘0008’H, |
| | Resource_Index | OMIT, |
| | PAD3 | OMIT, |
| | FrameErrorfFag | OMIT } |

| ASN.1 Type Constraint Declaration | | |
|---|---|---|
| **Constraint Name** : MACFrameErrorFlag_Resp<br>**Structured Type** : MACFrameErrorFlag<br>**Derivation Path** :<br>**Comments** : MAC attribute. | | |
| **Constraint Value** | | |
| { | Parameter_Type | ‘2072’H, |
| | Parameter_Length | ‘0008’H, |
| | Resource_Index | ?, |
| | PAD3 | PAD_3, |
| | FrameErrorfFag | FALSE } |

| ASN.1 Type Constraint Declaration | | |
|---|---|---|
| **Constraint Name** : MACNotCopiedFlag_Resp<br>**Structured Type** : MACNotCopiedFlag<br>**Derivation Path** :<br>**Comments** : MAC attribute. This attribute is optional. | | |
| **Constraint Value** | | |
| { | Parameter_Type | ‘2073’H, |
| | Parameter_Length | ?, |
| | Resource_Index | ?, |
| | PAD3 | *, |
| | NotCopiedFlag | * } |


Copyright International Organization for Standardization
Provided by IHS under license with ISO
No reproduction or networking permitted without license from IHS
Not for Resale

| ASN.1 Type Constraint Declaration | | |
|---|---|---|
| **Constraint Name** | : | MACMA_UnitdataAvailable_Req |
| **Structured Type** | : | MACMA_UnitdataAvailable |
| **Derivation Path** | : | |
| **Comments** | : | MAC attribute. |

| Constraint Value | | |
|---|---|---|
| { | Parameter_Type | ‘2074’H, |
| | Parameter_Length | ‘0008’H, |
| | Resource_Index | OMIT, |
| | PAD3 | OMIT, |
| | MA_UnitdataAvailable | OMIT } |

| ASN.1 Type Constraint Declaration | | |
|---|---|---|
| **Constraint Name** | : | MACMA_UnitdataAvailable_Resp |
| **Structured Type** | : | MACMA_UnitdataAvailable |
| **Derivation Path** | : | |
| **Comments** | : | MAC attribute. |

| Constraint Value | | |
|---|---|---|
| { | Parameter_Type | ‘2074’H, |
| | Parameter_Length | ‘0008’H, |
| | Resource_Index | ?, |
| | PAD3 | PAD_3, |
| | MA_UnitdataAvailable | ? } |

| ASN.1 Type Constraint Declaration | | |
|---|---|---|
| **Constraint Name** | : | MACMA_UnitdataAvailable_IUT |
| **Structured Type** | : | MACMA_UnitdataAvailable |
| **Derivation Path** | : | MACMA_UnitdataAvailable_Resp |
| **Comments** | : | MAC attribute. |

| Constraint Value | | | |
|---|---|---|---|
| REPLACE | MA_UnitdataAvailable | BY | TRUE |



Copyright International Organization for Standardization
Provided by IHS under license with ISO
No reproduction or networking permitted without license from IHS
Not for Resale

| ASN.1 Type Constraint Declaration | | |
|---|---|---|
| **Constraint Name** | : | MACHardwarePresent_Req |
| **Structured Type** | : | MACHardwarePresent |
| **Derivation Path** | : | |
| **Comments** | : | MAC attribute. |

| Constraint Value | | |
|---|---|---|
| { | Parameter_Type | ‘2075’H, |
| | Parameter_Length | ‘0008’H, |
| | Resource_Index | M_Indx, |
| | PAD2 | OMIT, |
| | HWPresent | OMIT } |

| ASN.1 Type Constraint Declaration | | |
|---|---|---|
| **Constraint Name** | : | MACHardwarePresent_Resp |
| **Structured Type** | : | MACHardwarePresent |
| **Derivation Path** | : | |
| **Comments** | : | MAC attribute. |

| Constraint Value | | |
|---|---|---|
| { | Parameter_Type | ‘2075’H, |
| | Parameter_Length | ‘0008’H, |
| | Resource_Index | ?, |
| | PAD2 | PAD_2, |
| | HWPresent | Present_Q } |

| ASN.1 Type Constraint Declaration | | |
|---|---|---|
| **Constraint Name** | : | MACHardwarePresent_IUT |
| **Structured Type** | : | MACHardwarePresent |
| **Derivation Path** | : | MACHardwarePresent_Resp |
| **Comments** | : | MAC attribute. |

| Constraint Value | | | |
|---|---|---|---|
| REPLACE | Resource_Index | BY | M_Indx, |
| REPLACE | HWPresent | BY | Present_1 |

| ASN.1 Type Constraint Declaration | | |
|---|---|---|
| **Constraint Name** | : | MACMA_UnitdataEnable_Req |
| **Structured Type** | : | MACMA_UnitdataEnable |
| **Derivation Path** | : | |
| **Comments** | : | MAC attribute. |

| Constraint Value | | |
|---|---|---|
| { | Parameter_Type | ‘2076’H, |
| | Parameter_Length | ‘0008’H, |
| | Resource_Index | OMIT, |
| | PAD3 | OMIT, |
| | MA_UnitdataEnable | OMIT } |


Copyright International Organization for Standardization
Provided by IHS under license with ISO
No reproduction or networking permitted without license from IHS
Not for Resale

| ASN.1 Type Constraint Declaration | | |
|---|---|---|
| **Constraint Name** | : | MACMA_UnitdataEnable_Resp |
| **Structured Type** | : | MACMA_UnitdataEnable |
| **Derivation Path** | : | |
| **Comments** | : | MAC attribute. |

| Constraint Value | | |
|---|---|---|
| { | Parameter_Type | ‘2076’H, |
| | Parameter_Length | ‘0008’H, |
| | Resource_Index | ?, |
| | PAD3 | PAD_3, |
| | MA_UnitdataEnable | TRUE --default value--} |

### 10.3.2.3 ASN.1 Type Constraint for PATH Attributes

| ASN.1 Type Constraint Declaration | | |
|---|---|---|
| **Constraint Name** | : | PATHGrp_Req |
| **Structured Type** | : | PATHGrp |
| **Derivation Path** | : | |
| **Comments** | : | fddiPATHConfigGrp. |

| Constraint Value | | |
|---|---|---|
| { | Parameter_Type | ‘320A’H, |
| | Parameter_Length | OMIT, |
| | Resource_Index | OMIT, |
| | Parameter_Value | OMIT } |

| ASN.1 Type Constraint Declaration | | |
|---|---|---|
| **Constraint Name** | : | PATHGrp_Resp |
| **Structured Type** | : | PATHGrp |
| **Derivation Path** | : | |
| **Comments** | : | fddiPATHConfigGrp. |

| Constraint Value | | |
|---|---|---|
| { | Parameter_Type | ‘320A’H, |
| | Parameter_Length | ?, |
| | Resource_Index | ?, |
| | Parameter_Value | PATHConfigGrp_Resp } |



Copyright International Organization for Standardization
Provided by IHS under license with ISO
No reproduction or networking permitted without license from IHS
Not for Resale

| ASN.1 Type Constraint Declaration | | |
|---|---|---|
| **Constraint Name** | : | PATHConfigGrp_Resp |
| **Structured Type** | : | PATHConfigGrp |
| **Derivation Path** | : | |
| **Comments** | : | PATH attribute group. |

**Constraint Value**

```
{       index           PATHIndex_Resp,
        ringlatency     PATHRingLatency_Resp,       --optional--
        tracestatus     PATHTraceStatus_Resp,       --optional--
        sbapayload      PATHSbaPayload_Resp,        --optional--
        sbaoverhead     PATHSbaOverhead_Resp,       --optional--
        configuration   PATHConfiguration_Resp,
        trmode          PATHT_Rmode_Resp,           --optional--
        sbaavailable    PATHSbaAvailable_Resp,      --optional--
        tvxlowerbound   PATHTVXLowerBound_Resp,
        tmaxlowerbound  PATHT_MaxLowerBound_Resp,
        maxtreq         PATHMaxT_Req_Resp }
```

| ASN.1 Type Constraint Declaration | | |
|---|---|---|
| **Constraint Name** | : | PATHIndex_Req |
| **Structured Type** | : | PATHIndex |
| **Derivation Path** | : | |
| **Comments** | : | PATH attribute. |

**Constraint Value**

```
{       Parameter_Type      '320B'H,
        Parameter_Length    '0008'H,
        Resource_Index      OMIT,
        PAD2                OMIT,
        Index               OMIT    }
```

| ASN.1 Type Constraint Declaration | | |
|---|---|---|
| **Constraint Name** | : | PATHIndex_Resp |
| **Structured Type** | : | PATHIndex |
| **Derivation Path** | : | |
| **Comments** | : | PATH attribute. |

**Constraint Value**

```
{       Parameter_Type      '320B'H,
        Parameter_Length    '0008'H,
        Resource_Index      ?,
        PAD2                PAD_2,
        Index               ?       }
```



Copyright International Organization for Standardization
Provided by IHS under license with ISO
No reproduction or networking permitted without license from IHS
Not for Resale

| ASN.1 Type Constraint Declaration | | | |
|---|---|---|---|
| **Constraint Name** : PATHIndex_IUT<br>**Structured Type** : PATHIndex<br>**Derivation Path** :<br>**Comments** : PATH attribute. | | | |
| **Constraint Value** | | | |
| REPLACE | Index | BY | ‘0001’H --primary-- |

| ASN.1 Type Constraint Declaration | | |
|---|---|---|
| **Constraint Name** : PATHRingLatency_Req<br>**Structured Type** : PATHRingLatency<br>**Derivation Path** :<br>**Comments** : PATH attribute. This attribute is optional. | | |
| **Constraint Value** | | |
| { | Parameter_Type | ‘320D’H, |
| | Parameter_Length | ‘0008’H, |
| | Resource_Index | OMIT, |
| | RingLatency | OMIT } |

| ASN.1 Type Constraint Declaration | | |
|---|---|---|
| **Constraint Name** : PATHRingLatency_Resp<br>**Structured Type** : PATHRingLatency<br>**Derivation Path** :<br>**Comments** : PATH attribute. This attribute is optional. | | |
| **Constraint Value** | | |
| { | Parameter_Type | ‘320D’H, |
| | Parameter_Length | ?, |
| | Resource_Index | ?, |
| | RingLatency | * } |

| ASN.1 Type Constraint Declaration | | | |
|---|---|---|---|
| **Constraint Name** : PATHRingLatency_IUT<br>**Structured Type** : PATHRingLatency<br>**Derivation Path** : PATHRingLatency_Resp<br>**Comments** : PATH attribute. This attribute is optional. | | | |
| **Constraint Value** | | | |
| REPLACE | RingLatency | BY | R_Latency |



Copyright International Organization for Standardization
Provided by IHS under license with ISO
No reproduction or networking permitted without license from IHS
Not for Resale

| ASN.1 Type Constraint Declaration | | |
|---|---|---|
| **Constraint Name** : PATHTraceStatus_Resp | | |
| **Structured Type** : PATHTraceStatus | | |
| **Derivation Path** : | | |
| **Comments** : PATH attribute. This attribute is optional. | | |
| **Constraint Value** | | |
| { | Parameter_Type | '320E'H, |
| | Parameter_Length | ?, |
| | Resource_Index | ?, |
| | PAD2 | PAD_2, |
| | TraceStatusType | TraceStatus_S } |

| ASN.1 Type Constraint Declaration | | |
|---|---|---|
| **Constraint Name** : PATHSbaPayload_Resp | | |
| **Structured Type** : PATHSbaPayload | | |
| **Derivation Path** : | | |
| **Comments** : PATH attribute. This attribute is optional. | | |
| **Constraint Value** | | |
| { | Parameter_Type | '320F'H, |
| | Parameter_Length | ?, |
| | Resource_Index | ?, |
| | SbaPayload | * } |

| ASN.1 Type Constraint Declaration | | |
|---|---|---|
| **Constraint Name** : PATHSbaOverhead_Resp | | |
| **Structured Type** : PATHSbaOverhead | | |
| **Derivation Path** : | | |
| **Comments** : PATH attribute. This attribute is optional. | | |
| **Constraint Value** | | |
| { | Parameter_Type | '3210'H, |
| | Parameter_Length | ?, |
| | Resource_Index | ?, |
| | SbaOverhead | * } |

| ASN.1 Type Constraint Declaration | | |
|---|---|---|
| **Constraint Name** : PATHConfiguration_Resp | | |
| **Structured Type** : PATHConfiguration | | |
| **Derivation Path** : | | |
| **Comments** : PATH attribute. | | |
| **Constraint Value** | | |
| { | Parameter_Type | '3212'H, |
| | Parameter_Length | ?, |
| | Resource_Index | ?, |
| | Configuration | PathConfig_Q } |



Copyright International Organization for Standardization
Provided by IHS under license with ISO
No reproduction or networking permitted without license from IHS
Not for Resale

| ASN.1 Type Constraint Declaration | | | |
|---|---|---|---|
| **Constraint Name** : PATHT_Rmode_Req<br>**Structured Type** : PATHT_Rmode<br>**Derivation Path** :<br>**Comments** : PATH attribute. This attribute is optional. | | | |
| **Constraint Value** | | | |
| { | Parameter_Type | ‘3213’H, | |
| | Parameter_Length | ‘0008’H, | |
| | Resource_Index | OMIT, | |
| | T_RmodeType | OMIT | } |

| ASN.1 Type Constraint Declaration | | | |
|---|---|---|---|
| **Constraint Name** : PATHT_Rmode_Resp<br>**Structured Type** : PATHT_Rmode<br>**Derivation Path** :<br>**Comments** : PATH attribute. This attribute is optional. | | | |
| **Constraint Value** | | | |
| { | Parameter_Type | ‘3213’H, | |
| | Parameter_Length | ?, | |
| | Resource_Index | ?, | |
| | T_RmodeType | * | } |

| ASN.1 Type Constraint Declaration | | | |
|---|---|---|---|
| **Constraint Name** : PATHT_Rmode_IUT1<br>**Structured Type** : PATHT_Rmode<br>**Derivation Path** :<br>**Comments** : PATH attribute. This attribute is optional. | | | |
| **Constraint Value** | | | |
| REPLACE | Resource_Index | BY | ‘0008’H, |
| REPLACE | T_RmodeType | BY | TIME(T_Rmode) |

| ASN.1 Type Constraint Declaration | | | |
|---|---|---|---|
| **Constraint Name** : PATHT_Rmode_IUT2<br>**Structured Type** : PATHT_Rmode<br>**Derivation Path** :<br>**Comments** : PATH attribute. This attribute is optional. | | | |
| **Constraint Value** | | | |
| REPLACE | Resource_Index | BY | ‘0008’H, |
| REPLACE | T_RmodeType | BY | TIME(2000) |
| --Assume 2 seconds is the desired T_Rmode requested by the tester’s PMF set request frame.-- | | | |
| --Note: Any desired T_Rmode within a range of zero second to 343.597 seconds is acceptable-- | | | |



Copyright International Organization for Standardization
Provided by IHS under license with ISO
No reproduction or networking permitted without license from IHS
Not for Resale

| ASN.1 Type Constraint Declaration | | |
|---|---|---|
| **Constraint Name** | : | PATHSbaAvailable_Resp |
| **Structured Type** | : | PATHSbaAvailable |
| **Derivation Path** | : | |
| **Comments** | : | PATH attribute. This attribute is optional. |

| Constraint Value | | |
|---|---|---|
| { | Parameter_Type | ‘3214’H, |
| | Parameter_Length | ?, |
| | Resource_Index | ? |
| | SbaAvailable | * } |

| ASN.1 Type Constraint Declaration | | |
|---|---|---|
| **Constraint Name** | : | PATHTVXLowerBound_Req |
| **Structured Type** | : | PATHTVXLowerBound |
| **Derivation Path** | : | |
| **Comments** | : | PATH attribute. |

| Constraint Value | | |
|---|---|---|
| { | Parameter_Type | ‘3215’H, |
| | Parameter_Length | ‘0008’H, |
| | Resource_Index | OMIT, |
| | TVXLowerBound | OMIT } |

| ASN.1 Type Constraint Declaration | | |
|---|---|---|
| **Constraint Name** | : | PATHTVXLowerBound_Resp |
| **Structured Type** | : | PATHTVXLowerBound |
| **Derivation Path** | : | |
| **Comments** | : | PATH attribute. |

| Constraint Value | | |
|---|---|---|
| { | Parameter_Type | ‘3215’H, |
| | Parameter_Length | ‘0008’H, |
| | Resource_Index | ?, |
| | TVXLowerBound | ? } |

| ASN.1 Type Constraint Declaration | | |
|---|---|---|
| **Constraint Name** | : | PATHTVXLowerBound_IUT |
| **Structured Type** | : | PATHTVXLowerBound |
| **Derivation Path** | : | PATHTVXLowerBound_Resp |
| **Comments** | : | PATH attribute. |

| Constraint Value | | | |
|---|---|---|---|
| REPLACE | TVXLowerBound | BY | INT_TO_HEX(TTC(TIME(2500)), 8) |



--`,,```,,,,````-`-`,,`,,`,`,,`---
Copyright International Organization for Standardization
Provided by IHS under license with ISO
No reproduction or networking permitted without license from IHS
Not for Resale

| ASN.1 Type Constraint Declaration | | |
|---|---|---|
| **Constraint Name** | : | PATHT_MaxLowerBound_Req |
| **Structured Type** | : | PATHT_MaxLowerBound |
| **Derivation Path** | : | |
| **Comments** | : | PATH attribute. |

| Constraint Value | | |
|---|---|---|
| { | Parameter_Type | ‘3216’H, |
| | Parameter_Length | ‘0008’H, |
| | Resource_Index | OMIT, |
| | T_MaxLowerBound | OMIT } |

| ASN.1 Type Constraint Declaration | | |
|---|---|---|
| **Constraint Name** | : | PATHT_MaxLowerBound_Resp |
| **Structured Type** | : | PATHT_MaxLowerBound |
| **Derivation Path** | : | |
| **Comments** | : | PATH attribute. |

| Constraint Value | | |
|---|---|---|
| { | Parameter_Type | ‘3216’H, |
| | Parameter_Length | ‘0008’H, |
| | Resource_Index | ?, |
| | T_MaxLowerBound | ? } |

| ASN.1 Type Constraint Declaration | | |
|---|---|---|
| **Constraint Name** | : | PATHT_MaxLowerBound_IUT |
| **Structured Type** | : | PATHT_MaxLowerBound |
| **Derivation Path** | : | PATHT_MaxLowerBound_Resp |
| **Comments** | : | PATH attribute. |

| Constraint Value | | | |
|---|---|---|---|
| REPLACE | T_MaxLowerBound | BY | INT_TO_HEX(TTC(TIME(165)), 8) |

| ASN.1 Type Constraint Declaration | | |
|---|---|---|
| **Constraint Name** | : | PATHMaxT_Req_Req |
| **Structured Type** | : | PATHMaxT_Req |
| **Derivation Path** | : | |
| **Comments** | : | PATH attribute. |

| Constraint Value | | |
|---|---|---|
| { | Parameter_Type | ‘3217’H, |
| | Parameter_Length | ‘0008’H, |
| | Resource_Index | OMIT, |
| | MaxT_Req | OMIT } |



--`,,```,,,,````-`-`,,`,,`,`,,`---
Copyright International Organization for Standardization
Provided by IHS under license with ISO
No reproduction or networking permitted without license from IHS
Not for Resale

| ASN.1 Type Constraint Declaration | | |
|---|---|---|
| **Constraint Name** : PATHMaxT_Req_Resp<br>**Structured Type** : PATHMaxT_Req<br>**Derivation Path** :<br>**Comments** : PATH attribute. | | |
| **Constraint Value** | | |
| { | Parameter_Type | ‘3217’H, |
| | Parameter_Length | ‘0008’H, |
| | Resource_Index | ?, |
| | MaxT_Req | ? } |

| ASN.1 Type Constraint Declaration | | | |
|---|---|---|---|
| **Constraint Name** : PATHMaxT_Req_IUT<br>**Structured Type** : PATHMaxT_Req<br>**Derivation Path** : PATHMaxT_Req_Resp<br>**Comments** : PATH attribute. | | | |
| **Constraint Value** | | | |
| REPLACE | MaxT_Req | BY | INT_TO_HEX(TTC(TIME(165)), 8) |

### 10.3.2.4 ASN.1 Type Constraint for PORT Attributes

| ASN.1 Type Constraint Declaration | | |
|---|---|---|
| **Constraint Name** : PORTGrp1_Req<br>**Structured Type** : PORTGrp<br>**Derivation Path** :<br>**Comments** : fddiPORTConfigGrp. | | |
| **Constraint Value** | | |
| { | Parameter_Type | ‘400A’H, |
| | Parameter_Length | OMIT, |
| | Resource_Index | OMIT, |
| | Parameter_Value | OMIT } |

| ASN.1 Type Constraint Declaration | | | |
|---|---|---|---|
| **Constraint Name** : PORTGrp2_Req<br>**Structured Type** : PORTGrp<br>**Derivation Path** : PORTGrp1_resp<br>**Comments** : fddiPORTOperationGrp. | | | |
| **Constraint Value** | | | |
| REPLACE | Parameter_Type | BY | ‘401E’H |


Copyright International Organization for Standardization
Provided by IHS under license with ISO
No reproduction or networking permitted without license from IHS
Not for Resale

| ASN.1 Type Constraint Declaration | | | |
|---|---|---|---|
| **Constraint Name** : PORTGrp3_Req<br>**Structured Type** : PORTGrp<br>**Derivation Path** : PORTGrp1_Resp<br>**Comments** : fddiPORTErrorCtrsGrp. | | | |
| **Constraint Value** | | | |
| REPLACE | Parameter_Type | BY | ‘4028’H |

| ASN.1 Type Constraint Declaration | | | |
|---|---|---|---|
| **Constraint Name** : PORTGrp4_Req<br>**Structured Type** : PORTGrp<br>**Derivation Path** : PORTGrp1_Resp<br>**Comments** : fddiPORTLerGrp. | | | |
| **Constraint Value** | | | |
| REPLACE | Parameter_Type | BY | ‘4032’H |

| ASN.1 Type Constraint Declaration | | | |
|---|---|---|---|
| **Constraint Name** : PORTGrp5_Req<br>**Structured Type** : PORTGrp<br>**Derivation Path** : PORTGrp1_Resp<br>**Comments** : fddiPORTStatusGrp. | | | |
| **Constraint Value** | | | |
| REPLACE | Parameter_Type | BY | ‘403C’H |

| ASN.1 Type Constraint Declaration | | |
|---|---|---|
| **Constraint Name** : PORTGrp1_Resp<br>**Structured Type** : PORTGrp<br>**Derivation Path** :<br>**Comments** : fddiPORTConfigGrp. | | |
| **Constraint Value** | | |
| { | Parameter_Type | ‘400A’H, |
| | Parameter_Length | ?, |
| | Resource_Index | ?, |
| | Parameter_Value | PORTConfigGrp_Resp } |



Copyright International Organization for Standardization
Provided by IHS under license with ISO
No reproduction or networking permitted without license from IHS
Not for Resale

| ASN.1 Type Constraint Declaration | |
|---|---|
| **Constraint Name** | : PORTGrp2_Resp |
| **Structured Type** | : PORTGrp |
| **Derivation Path** | : |
| **Comments** | : fddiPORTOperationGrp. |

| Constraint Value | | |
|---|---|---|
| { | Parameter_Type | ‘401E’H, |
| | Parameter_Length | ?, |
| | Resource_Index | ?, |
| | Parameter_Value | PORTOperationGrp_Resp } |

| ASN.1 Type Constraint Declaration | |
|---|---|
| **Constraint Name** | : PORTGrp3_Resp |
| **Structured Type** | : PORTGrp |
| **Derivation Path** | : |
| **Comments** | : fddiPORTErrorCtrsGrp. |

| Constraint Value | | |
|---|---|---|
| { | Parameter_Type | ‘4028’H, |
| | Parameter_Length | ?, |
| | Resource_Index | ?, |
| | Parameter_Value | PORTErrorCtrsGrp_Resp } |

| ASN.1 Type Constraint Declaration | |
|---|---|
| **Constraint Name** | : PORTGrp4_Resp |
| **Structured Type** | : PORTGrp |
| **Derivation Path** | : |
| **Comments** | : fddiPORTLerGrp. |

| Constraint Value | | |
|---|---|---|
| { | Parameter_Type | ‘4032’H, |
| | Parameter_Length | ?, |
| | Resource_Index | ?, |
| | Parameter_Value | PORTLerGrp_Resp } |

| ASN.1 Type Constraint Declaration | |
|---|---|
| **Constraint Name** | : PORTGrp5_Resp |
| **Structured Type** | : PORTGrp |
| **Derivation Path** | : |
| **Comments** | : fddiPORTStatusGrp. |

| Constraint Value | | |
|---|---|---|
| { | Parameter_Type | ‘403C’H, |
| | Parameter_Length | ?, |
| | Resource_Index | ?, |
| | Parameter_Value | PORTStatusGrp_Resp } |


Copyright International Organization for Standardization
Provided by IHS under license with ISO
No reproduction or networking permitted without license from IHS Not for Resale

#### 10.3.2.4.1 PORT Configuration Group Attributes Constraints

| ASN.1 Type Constraint Declaration | | |
|---|---|---|
| **Constraint Name** : PORTConfigGrp_Resp<br>**Structured Type** : PORTConfigGrp<br>**Derivation Path** :<br>**Comments** : PORT attribute group. | | |
| **Constraint Value** | | |
| { | mytype | PORTMyType_Resp, |
| | neighbortype | PORTNeighborType_Resp, |
| | connectionpolicies | PORTConnectionPolicies_Resp, |
| | macindicated | PORTMACIndicated_Resp, |
| | currentpath | PORTCurrentPath_Resp, |
| | requestedpath | PORTRequestedPaths_Resp, |
| | macplacement | PORTMACPlacement_Resp, |
| | availablepath | PORTAvailablePaths_Resp, |
| | maclooptime | PORTMACLoop_Time_Resp, -- optional-- |
| | pmdclass | PORTPMDClass_Resp, |
| | connectioncapabilities | PORTConnectionCapabilities_Resp, |
| | index | PORTIndex_Resp } |

| ASN.1 Type Constraint Declaration | | |
|---|---|---|
| **Constraint Name** : PORTMyType_Req<br>**Structured Type** : PORTMyType<br>**Derivation Path** :<br>**Comments** : PORT attribute. | | |
| **Constraint Value** | | |
| { | Parameter_Type | ‘400C’H, |
| | Parameter_Length | ‘0008’H, |
| | Resource_Index | P_Indx, --Index of port A-- |
| | PAD2 | OMIT, |
| | MyType | OMIT } |

| ASN.1 Type Constraint Declaration | | |
|---|---|---|
| **Constraint Name** : PORTMyType_Resp<br>**Structured Type** : PORTMyType<br>**Derivation Path** :<br>**Comments** : PORT attribute. | | |
| **Constraint Value** | | |
| { | Parameter_Type | ‘400C’H, |
| | Parameter_Length | ‘0008’H, |
| | Resource_Index | ?, |
| | PAD2 | PAD_2, |
| | MyType | PortType_Q } |



Copyright International Organization for Standardization
Provided by IHS under license with ISO
No reproduction or networking permitted without license from IHS
Not for Resale

| ASN.1 Type Constraint Declaration | | | |
|---|---|---|---|
| **Constraint Name** : PORTMyType_IUT<br>**Structured Type** : PORTMyType<br>**Derivation Path** : PORTMyType_Resp<br>**Comments** : PORT attribute. | | | |
| **Constraint Value** | | | |
| REPLACE | Resource_Index | BY | P_Indx, |
| REPLACE | MyType | BY | PortType_A |

| ASN.1 Type Constraint Declaration | | |
|---|---|---|
| **Constraint Name** : PORTNeighborType_Req<br>**Structured Type** : PORTNeighborType<br>**Derivation Path** :<br>**Comments** : PORT attribute. | | |
| **Constraint Value** | | |
| { | Parameter_Type | ‘400D’H, |
| | Parameter_Length | ‘0008’H, |
| | Resource_Index | P_Indx, --Index of port A-- |
| | PAD2 | OMIT, |
| | NeighborType | OMIT } |

| ASN.1 Type Constraint Declaration | | |
|---|---|---|
| **Constraint Name** : PORTNeighborType_Resp<br>**Structured Type** : PORTNeighborType<br>**Derivation Path** :<br>**Comments** : PORT attribute. | | |
| **Constraint Value** | | |
| { | Parameter_Type | ‘400D’H, |
| | Parameter_Length | ‘0008’H, |
| | Resource_Index | ?, |
| | PAD2 | PAD_2, |
| | NeighborType | PortType_Q } |

| ASN.1 Type Constraint Declaration | | | |
|---|---|---|---|
| **Constraint Name** : PORTNeighborType_IUT<br>**Structured Type** : PORTNeighborType<br>**Derivation Path** : PORTNeighborType_Resp<br>**Comments** : PORT attribute. | | | |
| **Constraint Value** | | | |
| REPLACE | Resource_Index | BY | P_Indx, |
| REPLACE | NeighborType | BY | PortType_B |



Copyright International Organization for Standardization
Provided by IHS under license with ISO
No reproduction or networking permitted without license from IHS
Not for Resale

| ASN.1 Type Constraint Declaration | | |
|---|---|---|
| **Constraint Name** : PORTConnectionPolicies_Resp<br>**Structured Type** : PORTConnectionPolicies<br>**Derivation Path** :<br>**Comments** : PORT attribute. | | |
| **Constraint Value** | | |
| { | Parameter_Type | ‘400E’H, |
| | Parameter_Length | ‘0008’H, |
| | Resource_Index | ?, |
| | PAD3 | PAD_3, |
| | ConnectionPoliciesType | ConnectionPolicies_Q } |

| ASN.1 Type Constraint Declaration | | |
|---|---|---|
| **Constraint Name** : PORTMACIndicated_Resp<br>**Structured Type** : PORTMACIndicated<br>**Derivation Path** :<br>**Comments** : PORT attribute. | | |
| **Constraint Value** | | |
| { | Parameter_Type | ‘400F’H, |
| | Parameter_Length | ‘0008’H, |
| | Resource_Index | ?, |
| | PAD2 | PAD_2, |
| | T_Val9 | ?, |
| | R_Val9 | ? } |

| ASN.1 Type Constraint Declaration | | |
|---|---|---|
| **Constraint Name** : PORTCurrentPath_Req<br>**Structured Type** : PORTCurrentPath<br>**Derivation Path** :<br>**Comments** : PORT attribute. | | |
| **Constraint Value** | | |
| { | Parameter_Type | ‘4010’H, |
| | Parameter_Length | ‘0008’H, |
| | Resource_Index | P_Indx, |
| | PAD2 | OMIT, |
| | CurrentPath | OMIT } |



Copyright International Organization for Standardization
Provided by IHS under license with ISO
No reproduction or networking permitted without license from IHS
Not for Resale

| ASN.1 Type Constraint Declaration | | |
|---|---|---|
| **Constraint Name** | : | PORTCurrentPath_Resp |
| **Structured Type** | : | PORTCurrentPath |
| **Derivation Path** | : | |
| **Comments** | : | PORT attribute. |

| Constraint Value | | |
|---|---|---|
| { | Parameter_Type | ‘4010’H, |
| | Parameter_Length | ‘0008’H, |
| | Resource_Index | ?, |
| | PAD2 | PAD_2, |
| | CurrentPath | CurrentPathType_Q } |

| ASN.1 Type Constraint Declaration | | |
|---|---|---|
| **Constraint Name** | : | PORTCurrentPath_IUT |
| **Structured Type** | : | PORTCurrentPath |
| **Derivation Path** | : | PORTCurrentPath_Resp |
| **Comments** | : | PORT attribute. |

| Constraint Value | | | |
|---|---|---|---|
| REPLACE | Resource_Index | BY | P_Indx, |
| REPLACE | CurrentPath | BY | P_CurrentPath |

| ASN.1 Type Constraint Declaration | | |
|---|---|---|
| **Constraint Name** | : | PORTRequestedPaths_Req |
| **Structured Type** | : | PORTRequestedPaths |
| **Derivation Path** | : | |
| **Comments** | : | PORT attribute. |

| Constraint Value | | |
|---|---|---|
| { | Parameter_Type | ‘4011’H, |
| | Parameter_Length | ‘0008’H, |
| | Resource_Index | P_Indx, --use appropriate index for the requested port-- |
| | PAD2 | OMIT, |
| | RequestedPaths | OMIT } |

| ASN.1 Type Constraint Declaration | | |
|---|---|---|
| **Constraint Name** | : | PORTRequestedPaths_Resp |
| **Structured Type** | : | PORTRequestedPaths |
| **Derivation Path** | : | |
| **Comments** | : | PORT attribute. |

| Constraint Value | | |
|---|---|---|
| { | Parameter_Type | ‘4011’H, |
| | Parameter_Length | ‘0008’H, |
| | Resource_Index | ?, |
| | PAD2 | PAD_2, |
| | RequestedPaths | RequestedPaths_Q } |


Copyright International Organization for Standardization
Provided by IHS under license with ISO
No reproduction or networking permitted without license from IHS
Not for Resale

| ASN.1 Type Constraint Declaration | | | |
|---|---|---|---|
| **Constraint Name** : PORTRequestedPaths_A<br>**Structured Type** : PORTRequestedPaths<br>**Derivation Path** : PORTRequestedPaths_Resp<br>**Comments** : PORT attribute. | | | |
| **Constraint Value** | | | |
| REPLACE | Resource_Index | BY | P_Indx, --Index of port A-- |
| REPLACE | RequestedPaths | BY | RequestedPaths_A |

| ASN.1 Type Constraint Declaration | | | |
|---|---|---|---|
| **Constraint Name** : PORTRequestedPaths_B1<br>**Structured Type** : PORTRequestedPaths<br>**Derivation Path** : PORTRequestedPaths_Resp<br>**Comments** : PORT attribute. | | | |
| **Constraint Value** | | | |
| REPLACE | Resource_Index | BY | P_Indx, --Index of port B-- |
| REPLACE | RequestedPaths | BY | RequestedPaths_B1 |

| ASN.1 Type Constraint Declaration | | | |
|---|---|---|---|
| **Constraint Name** : PORTRequestedPaths_B2<br>**Structured Type** : PORTRequestedPaths<br>**Derivation Path** : PORTRequestedPaths_Resp<br>**Comments** : PORT attribute. | | | |
| **Constraint Value** | | | |
| REPLACE | Resource_Index | BY | P_Indx, --Index of port B-- |
| REPLACE | RequestedPaths | BY | RequestedPaths_B2 |



Copyright International Organization for Standardization
Provided by IHS under license with ISO
No reproduction or networking permitted without license from IHS
Not for Resale

| ASN.1 Type Constraint Declaration | | | |
|---|---|---|---|
| **Constraint Name** : PORTRequestedPaths_S<br>**Structured Type** : PORTRequestedPaths<br>**Derivation Path** : PORTRequestedPaths_Resp<br>**Comments** : PORT attribute. | | | |
| **Constraint Value** | | | |
| REPLACE | Resource_Index | BY | P_Indx, --Index of port S-- |
| REPLACE | RequestedPaths | BY | RequestedPaths_S |

| ASN.1 Type Constraint Declaration | | | |
|---|---|---|---|
| **Constraint Name** : PORTRequestedPaths_M<br>**Structured Type** : PORTRequestedPaths<br>**Derivation Path** : PORTRequestedPaths_Resp<br>**Comments** : PORT attribute. | | | |
| **Constraint Value** | | | |
| REPLACE | Resource_Index | BY | P_Indx, --Index of port M-- |
| REPLACE | RequestedPaths | BY | RequestedPaths_M |

| ASN.1 Type Constraint Declaration | | |
|---|---|---|
| **Constraint Name** : PORTMACPlacement_Req<br>**Structured Type** : PORTMACPlacement<br>**Derivation Path** :<br>**Comments** : PORT attribute. | | |
| **Constraint Value** | | |
| { | Parameter_Type | ‘4012’H, |
| | Parameter_Length | ‘0008’H, |
| | Resource_Index | P_Indx, --Index of port B (exit port)-- |
| | PAD2 | OMIT, |
| | MACPlacement | OMIT } |

| ASN.1 Type Constraint Declaration | | |
|---|---|---|
| **Constraint Name** : PORTMACPlacement_Resp<br>**Structured Type** : PORTMACPlacement<br>**Derivation Path** :<br>**Comments** : PORT attribute. | | |
| **Constraint Value** | | |
| { | Parameter_Type | ‘4012’H, |
| | Parameter_Length | ‘0008’H, |
| | Resource_Index | ?, |
| | PAD2 | PAD_2, |
| | MACPlacement | ? } |


Copyright International Organization for Standardization
Provided by IHS under license with ISO
No reproduction or networking permitted without license from IHS
Not for Resale

| ASN.1 Type Constraint Declaration | | | |
|---|---|---|---|
| **Constraint Name** : PORTMACPlacement_IUT<br>**Structured Type** : PORTMACPlacement<br>**Derivation Path** : PORTMACPlacement_Resp<br>**Comments** : PORT attribute. | | | |
| **Constraint Value** | | | |
| REPLACE | Resource_Index | BY | P_Indx, --Index of port B (exit port)-- |
| REPLACE | MACPlacement | BY | M_Indx |

| ASN.1 Type Constraint Declaration | | |
|---|---|---|
| **Constraint Name** : PORTAvailablePaths_Req<br>**Structured Type** : PORTAvailablePaths<br>**Derivation Path** :<br>**Comments** : PORT attribute. | | |
| **Constraint Value** | | |
| { | Parameter_Type | ‘4013’H, |
| | Parameter_Length | ‘0008’H, |
| | Resource_Index | P_Indx, --Index of port A (or port B)-- |
| | PAD3 | OMIT, |
| | AvailablePaths | OMIT } |

| ASN.1 Type Constraint Declaration | | |
|---|---|---|
| **Constraint Name** : PORTAvailablePaths_Resp<br>**Structured Type** : PORTAvailablePaths<br>**Derivation Path** :<br>**Comments** : PORT attribute. | | |
| **Constraint Value** | | |
| { | Parameter_Type | ‘4013’H, |
| | Parameter_Length | ‘0008’H, |
| | Resource_Index | ?, |
| | PAD3 | PAD_3, |
| | AvailablePaths | AvailablePaths_Q } |

| ASN.1 Type Constraint Declaration | | | |
|---|---|---|---|
| **Constraint Name** : PORTAvailablePaths_IUT<br>**Structured Type** : PORTAvailablePaths<br>**Derivation Path** : PORTAvailablePaths_Resp<br>**Comments** : PORT attribute. | | | |
| **Constraint Value** | | | |
| REPLACE | Resource_Index | BY | P_Indx, --Index of port A (or port B)-- |
| REPLACE | AvailablePaths | BY | AvailablePaths_PS |



Copyright International Organization for Standardization
Provided by IHS under license with ISO
No reproduction or networking permitted without license from IHS
Not for Resale

| ASN.1 Type Constraint Declaration | |
|---|---|
| **Constraint Name** | : PORTMACLoop_Time_Req |
| **Structured Type** | : PORTMACLoop_Time |
| **Derivation Path** | : |
| **Comments** | : PORT attribute. This attribute is optional. |

**Constraint Value**

```
{       Parameter_Type          ‘4015’H,
        Parameter_Length        ‘0008’H,
        Resource_Index          P_Indx, --assume index of port A--
        MACLoop_Time            OMIT    }
```

| ASN.1 Type Constraint Declaration | |
|---|---|
| **Constraint Name** | : PORTMACLoop_Time_Resp |
| **Structured Type** | : PORTMACLoop_Time |
| **Derivation Path** | : |
| **Comments** | : PORT attribute. This attribute is optional. |

**Constraint Value**

```
{       Parameter_Type          ‘4015’H,
        Parameter_Length        ?,
        Resource_Index          ?,
        MACLoop_Time            *       }
```

| ASN.1 Type Constraint Declaration | |
|---|---|
| **Constraint Name** | : PORTMACLoop_Time_IUT1 |
| **Structured Type** | : PORTMACLoop_Time |
| **Derivation Path** | : |
| **Comments** | : PORT attribute. This attribute is optional. |

**Constraint Value**

```
{       Parameter_Type          ‘4015’H,
        Parameter_Length        ‘0008’H,
        Resource_Index          P_Indx,
        MACLoop_Time            TIME(T_Next9) }
```

| ASN.1 Type Constraint Declaration | |
|---|---|
| **Constraint Name** | : PORTMACLoop_Time_IUT2 |
| **Structured Type** | : PORTMACLoop_Time |
| **Derivation Path** | : PORTMACLoop_Time_IUT1 |
| **Comments** | : PORT attribute. This attribute is optional. |

**Constraint Value**

```
REPLACE         MACLoop_Time            BY      TIME(210)
--Assume 210 milliseconds is the desired T_Next(9) requested by tester’s PMF set request frame.--
--Note: Any desired T_Next(9) >= 200ms is acceptable.--
```



Copyright International Organization for Standardization
Provided by IHS under license with ISO
No reproduction or networking permitted without license from IHS
Not for Resale

| ASN.1 Type Constraint Declaration | | |
|---|---|---|
| **Constraint Name** | : | PORTPMDClass_Req |
| **Structured Type** | : | PORTPMDClass |
| **Derivation Path** | : | |
| **Comments** | : | PORT attribute. |

| Constraint Value | | |
|---|---|---|
| { | Parameter_Type | ‘4016’H, |
| | Parameter_Length | ‘0008’H, |
| | Resource_Index | P_Indx, |
| | PAD2 | OMIT, |
| | PMDClassType | OMIT } |

| ASN.1 Type Constraint Declaration | | |
|---|---|---|
| **Constraint Name** | : | PORTPMDClass_Resp |
| **Structured Type** | : | PORTPMDClass |
| **Derivation Path** | : | |
| **Comments** | : | PORT attribute. |

| Constraint Value | | |
|---|---|---|
| { | Parameter_Type | ‘4016’H, |
| | Parameter_Length | ‘0008’H, |
| | Resource_Index | ?, |
| | PAD2 | PAD_2, |
| | PMDClassType | PMDClass_Q } |

| ASN.1 Type Constraint Declaration | | |
|---|---|---|
| **Constraint Name** | : | PORTPMDClass_IUT |
| **Structured Type** | : | PORTPMDClass |
| **Derivation Path** | : | PORTPMDClass_Resp |
| **Comments** | : | PORT attribute. |

| Constraint Value | | | |
|---|---|---|---|
| REPLACE | Resource_Index | BY | P_Indx, |
| REPLACE | PMDClassType | BY | PMD_Type |

| ASN.1 Type Constraint Declaration | | |
|---|---|---|
| **Constraint Name** | : | PORTConnectionCapabilities_Resp |
| **Structured Type** | : | PORTConnectionCapabilities |
| **Derivation Path** | : | |
| **Comments** | : | PORT attribute. |

| Constraint Value | | |
|---|---|---|
| { | Parameter_Type | ‘4017’H, |
| | Parameter_Length | ‘0008’H, |
| | Resource_Index | ?, |
| | PAD3 | PAD_3, |
| | ConnectionCapabilities | ConnectionPolicies_Q } |



Copyright International Organization for Standardization
Provided by IHS under license with ISO
No reproduction or networking permitted without license from IHS
Not for Resale

| ASN.1 Type Constraint Declaration | | |
|---|---|---|
| **Constraint Name** | : | PORTIndex_Req |
| **Structured Type** | : | PORTIndex |
| **Derivation Path** | : | |
| **Comments** | : | PORT attribute. |

| Constraint Value | | |
|---|---|---|
| { | Parameter_Type | ‘401D’H, |
| | Parameter_Length | ‘0008’H, |
| | Resource_Index | ‘00000000’H, |
| | PAD2 | OMIT, |
| | PortIndx | OMIT } |

| ASN.1 Type Constraint Declaration | | |
|---|---|---|
| **Constraint Name** | : | PORTIndex_Resp |
| **Structured Type** | : | PORTIndex |
| **Derivation Path** | : | |
| **Comments** | : | PORT attribute. |

| Constraint Value | | |
|---|---|---|
| { | Parameter_Type | ‘401D’H, |
| | Parameter_Length | ‘0008’H, |
| | Resource_Index | ?, |
| | PAD2 | PAD_2, |
| | PortIndx | ? } |

| ASN.1 Type Constraint Declaration | | |
|---|---|---|
| **Constraint Name** | : | PORTIndex_IUT |
| **Structured Type** | : | PORTIndex |
| **Derivation Path** | : | PORTIndex_Resp |
| **Comments** | : | PORT attribute. |

| Constraint Value | | | |
|---|---|---|---|
| REPLACE | Resource_Index | BY | ‘00000000’H, |
| REPLACE | PortIndx | BY | PORT_Indx |

### 10.3.2.4.2 PORT Operation Group Attributes Constraints

| ASN.1 Type Constraint Declaration | | |
|---|---|---|
| **Constraint Name** | : | PORTOperationGrp_Resp |
| **Structured Type** | : | PORTOperationGrp |
| **Derivation Path** | : | |
| **Comments** | : | PORT attribute group. |

| Constraint Value | | | |
|---|---|---|---|
| { | maintls | PORTMaint_LS_Resp, | --optional-- |
| | bsflag | PORTBS_Flag_Resp, | |
| | pcls | PORTPC_LS_Resp | --optional (OP)-- } |


Copyright International Organization for Standardization
Provided by IHS under license with ISO
No reproduction or networking permitted without license from IHS
Not for Resale

| ASN.1 Type Constraint Declaration | | |
|---|---|---|
| **Constraint Name** | : | PORTMaint_LS_Resp |
| **Structured Type** | : | PORTMaint_LS |
| **Derivation Path** | : | |
| **Comments** | : | PORT attribute. This attribute is optional. |

| Constraint Value | | |
|---|---|---|
| { | Parameter_Type | ‘401F’H, |
| | Parameter_Length | ?, |
| | Resource_Index | ?, |
| | PAD2 | *, |
| | Maint_LS | LineState_S } |

| ASN.1 Type Constraint Declaration | | |
|---|---|---|
| **Constraint Name** | : | PORTBS_Flag_Resp |
| **Structured Type** | : | PORTBS_Flag |
| **Derivation Path** | : | |
| **Comments** | : | PORT attribute. |

| Constraint Value | | |
|---|---|---|
| { | Parameter_Type | ‘4021’H, |
| | Parameter_Length | ‘0008’H, |
| | Resource_Index | ?, |
| | PAD3 | PAD_3, |
| | BS_Flag | ? } |

| ASN.1 Type Constraint Declaration | | |
|---|---|---|
| **Constraint Name** | : | PORTPC_LS_Req |
| **Structured Type** | : | PORTPC_LS |
| **Derivation Path** | : | |
| **Comments** | : | PORT attribute. This attribute is optional. |

| Constraint Value | | |
|---|---|---|
| { | Parameter_Type | ‘4022’H, |
| | Parameter_Length | ‘0008’H, |
| | Resource_Index | P_Indx, --assume index of port A-- |
| | PAD2 | OMIT, |
| | PC_LS | OMIT } |



Copyright International Organization for Standardization
Provided by IHS under license with ISO
No reproduction or networking permitted without license from IHS
Not for Resale

| ASN.1 Type Constraint Declaration | | |
|---|---|---|
| **Constraint Name** | : | PORTPC_LS_Resp |
| **Structured Type** | : | PORTPC_LS |
| **Derivation Path** | : | |
| **Comments** | : | PORT attribute. This attribute is optional. |

| Constraint Value | | |
|---|---|---|
| { | Parameter_Type | ‘4022’H, |
| | Parameter_Length | ?, |
| | Resource_Index | ?, |
| | PAD2 | *, |
| | PC_LS | LIneState_S } |

| ASN.1 Type Constraint Declaration | | |
|---|---|---|
| **Constraint Name** | : | PORTPC_LS_IUT |
| **Structured Type** | : | PORTPC_LS |
| **Derivation Path** | : | PORTPC_LS_Resp |
| **Comments** | : | PORT attribute. This attribute is optional. |

| Constraint Value | | |
|---|---|---|
| { | Parameter_Type | ‘4022’H, |
| | Parameter_Length | ‘0008’H, |
| | Resource_Index | P_Indx, |
| | PAD2 | PAD_2, |
| | PC_LS | LIneState_Pdr } |

#### 10.3.2.4.3 PORT Error Counters Group Attributes Constraints

| ASN.1 Type Constraint Declaration | | |
|---|---|---|
| **Constraint Name** | : | PORTErrorCtrsGrp_Resp |
| **Structured Type** | : | PORTErrorCtrsGrp |
| **Derivation Path** | : | |
| **Comments** | : | PORT attribute group. |

| Constraint Value | | | |
|---|---|---|---|
| { | eberrorct | PORTEBError_Ct_Resp, | --optional (OP)-- |
| | lctfailct | PORTLCTFail_Ct_Resp} | |

| ASN.1 Type Constraint Declaration | | |
|---|---|---|
| **Constraint Name** | : | PORTEBError_Ct_Resp |
| **Structured Type** | : | PORTEBError_Ct |
| **Derivation Path** | : | |
| **Comments** | : | PORT attribute. This attribute is optional. |

| Constraint Value | | |
|---|---|---|
| { | Parameter_Type | ‘4029’H, |
| | Parameter_Length | ?, |
| | Resource_Index | ?, |
| | EBError_Ct | * } |


Copyright International Organization for Standardization
Provided by IHS under license with ISO
No reproduction or networking permitted without license from IHS Not for Resale

| ASN.1 Type Constraint Declaration | | |
|---|---|---|
| **Constraint Name** | : | PORTLCTFail_Ct_Resp |
| **Structured Type** | : | PORTLCTFail_Ct |
| **Derivation Path** | : | |
| **Comments** | : | PORT attribute. |

| Constraint Value | | |
|---|---|---|
| { | Parameter_Type | ‘402A’H, |
| | Parameter_Length | ‘0008’H, |
| | Resource_Index | ?, |
| | LCTFail_Ct | ? } |

### 10.3.2.4.4 PORT LER Group Attributes Constraints

| ASN.1 Type Constraint Declaration | | |
|---|---|---|
| **Constraint Name** | : | PORTLerGrp_Resp |
| **Structured Type** | : | PORTLerGrp |
| **Derivation Path** | : | |
| **Comments** | : | POR attribute group. |

| Constraint Value | | |
|---|---|---|
| { | lerestimate | PORTLer_Estimate_Resp, |
| | lemrejectct | PORTLem_Reject_Ct_Resp, |
| | lemct | PORTLem_Ct_Resp, |
| | lercutoff | PORTLer_Cutoff_Resp, |
| | leralarm | PORTLer_Alarm_Resp } |

| ASN.1 Type Constraint Declaration | | |
|---|---|---|
| **Constraint Name** | : | PORTLer_Estimate_Resp |
| **Structured Type** | : | PORTLer_Estimate |
| **Derivation Path** | : | |
| **Comments** | : | PORT attribute. |

| Constraint Value | | |
|---|---|---|
| { | Parameter_Type | ‘4033’H, |
| | Parameter_Length | ‘0008’H, |
| | Resource_Index | ?, |
| | PAD3 | PAD_3, |
| | Ler_Estimate | ? } |



Copyright International Organization for Standardization
Provided by IHS under license with ISO
No reproduction or networking permitted without license from IHS
Not for Resale

| ASN.1 Type Constraint Declaration | |
|---|---|
| **Constraint Name** | : PORTLem_Reject_Ct_Resp |
| **Structured Type** | : PORTLem_Reject_Ct |
| **Derivation Path** | : |
| **Comments** | : PORT attribute. |

| Constraint Value | | |
|---|---|---|
| { | Parameter_Type | ‘4034’H, |
| | Parameter_Length | ‘0008’H, |
| | Resource_Index | ?, |
| | Lem_Reject_Ct | ? } |

| ASN.1 Type Constraint Declaration | |
|---|---|
| **Constraint Name** | : PORTLem_Ct_Resp |
| **Structured Type** | : PORTLem_Ct |
| **Derivation Path** | : |
| **Comments** | : PORT attribute. |

| Constraint Value | | |
|---|---|---|
| { | Parameter_Type | ‘4035’H, |
| | Parameter_Length | ‘0008’H, |
| | Resource_Index | ?, |
| | Lem_Ct | ? } |

| ASN.1 Type Constraint Declaration | |
|---|---|
| **Constraint Name** | : PORTLer_Cutoff_Req |
| **Structured Type** | : PORTLer_Cutoff |
| **Derivation Path** | : |
| **Comments** | : PORT attribute. |

| Constraint Value | | |
|---|---|---|
| { | Parameter_Type | ‘403A’H, |
| | Parameter_Length | ‘0008’H, |
| | Resource_Index | P_Indx, --assume index of port A-- |
| | PAD3 | OMIT, |
| | Ler_Cutoff | OMIT } |

| ASN.1 Type Constraint Declaration | |
|---|---|
| **Constraint Name** | : PORTLer_Cutoff_Resp |
| **Structured Type** | : PORTLer_Cutoff |
| **Derivation Path** | : |
| **Comments** | : PORT attribute. |

| Constraint Value | | |
|---|---|---|
| { | Parameter_Type | ‘403A’H, |
| | Parameter_Length | ‘0008’H, |
| | Resource_Index | ?, |
| | PAD3 | PAD_3, |
| | Ler_Cutoff | ? } |


Copyright International Organization for Standardization
Provided by IHS under license with ISO
No reproduction or networking permitted without license from IHS
Not for Resale

| ASN.1 Type Constraint Declaration | | | |
|---|---|---|---|
| **Constraint Name** : PORTLer_Cutoff_IUT<br>**Structured Type** : PORTLer_Cutoff<br>**Derivation Path** : PORTLer_Cutoff_Resp<br>**Comments** : PORT attribute. | | | |
| **Constraint Value** | | | |
| REPLACE | Resource_Index | BY | P_Indx, |
| REPLACE | Ler_Cutoff | BY | '07'H --default value-- |

| ASN.1 Type Constraint Declaration | | |
|---|---|---|
| **Constraint Name** : PORTLer_Alarm_Req<br>**Structured Type** : PORTLer_Alarm<br>**Derivation Path** :<br>**Comments** : PORT attribute. | | |
| **Constraint Value** | | |
| { | Parameter_Type | '403B'H, |
| | Parameter_Length | '0008'H, |
| | Resource_Index | P_Indx, --assume index of port A-- |
| | PAD3 | OMIT, |
| | Ler_Alarm | OMIT } |

| ASN.1 Type Constraint Declaration | | |
|---|---|---|
| **Constraint Name** : PORTLer_Alarm_Resp<br>**Structured Type** : PORTLer_Alarm<br>**Derivation Path** :<br>**Comments** : PORT attribute. | | |
| **Constraint Value** | | |
| { | Parameter_Type | '403B'H, |
| | Parameter_Length | '0008'H, |
| | Resource_Index | ?, |
| | PAD3 | PAD_3, |
| | Ler_Alarm | ? } |

| ASN.1 Type Constraint Declaration | | | |
|---|---|---|---|
| **Constraint Name** : PORTLer_Alarm_IUT<br>**Structured Type** : PORTLer_Alarm<br>**Derivation Path** : PORTLer_Alarm_Resp<br>**Comments** : PORT attribute. | | | |
| **Constraint Value** | | | |
| REPLACE | Resource_Index | BY | P_Indx, |
| REPLACE | Ler_Alarm | BY | '08'H --default value-- |

--`,,```,,,,````-`-`,,`,,`,`,,`---



Copyright International Organization for Standardization
Provided by IHS under license with ISO
No reproduction or networking permitted without license from IHS
Not for Resale

### 10.3.2.4.5 PORT Status Group Attributes Constraints

| ASN.1 Type Constraint Declaration | | |
|---|---|---|
| **Constraint Name** | : | PORTStatusGrp_Resp |
| **Structured Type** | : | PORTStatusGrp |
| **Derivation Path** | : | |
| **Comments** | : | PORT attribute group. |

| Constraint Value | | |
|---|---|---|
| { | connectionstate | PORTConnectState_Resp, |
| | pcmstate | PORTPCMState_Resp, |
| | pcwithhold | PORTPC_Withhold_Resp, |
| | lerflag | PORTLerFlag_Resp, |
| | hardwarepresent | PORTHardwarePresent_Resp } |

| ASN.1 Type Constraint Declaration | | |
|---|---|---|
| **Constraint Name** | : | PORTConnectState_Req |
| **Structured Type** | : | PORTConnectState |
| **Derivation Path** | : | |
| **Comments** | : | PORT attribute. |

| Constraint Value | | |
|---|---|---|
| { | Parameter_Type | '403D'H, |
| | Parameter_Length | '0008'H, |
| | Resource_Index | P_Indx, --assume index of port A-- |
| | PAD2 | OMIT, |
| | ConnectStateType | OMIT } |

| ASN.1 Type Constraint Declaration | | |
|---|---|---|
| **Constraint Name** | : | PORTConnectState_Resp |
| **Structured Type** | : | PORTConnectState |
| **Derivation Path** | : | |
| **Comments** | : | PORT attribute. |

| Constraint Value | | |
|---|---|---|
| { | Parameter_Type | '403D'H, |
| | Parameter_Length | '0008'H, |
| | Resource_Index | ?, |
| | PAD2 | PAD_2, |
| | ConnectStateType | ConnectState_Q } |

| ASN.1 Type Constraint Declaration | | |
|---|---|---|
| **Constraint Name** | : | PORTConnectState_IUT |
| **Structured Type** | : | PORTConnectState |
| **Derivation Path** | : | PORTConnectState_Resp |
| **Comments** | : | PORT attribute. |

| Constraint Value | | | |
|---|---|---|---|
| REPLACE | Resource_Index | BY | P_Indx, |
| REPLACE | ConnectStateType | BY | ConnectState_A } |



Copyright International Organization for Standardization
Provided by IHS under license with ISO
No reproduction or networking permitted without license from IHS
Not for Resale

| ASN.1 Type Constraint Declaration | | |
|---|---|---|
| **Constraint Name** | : | PORTPCMState_Req |
| **Structured Type** | : | PORTPCMState |
| **Derivation Path** | : | |
| **Comments** | : | PORT attribute. |

| Constraint Value | | |
|---|---|---|
| { | Parameter_Type | ‘403E’H, |
| | Parameter_Length | ‘0008’H, |
| | Resource_Index | P_Indx, --assume index of port A-- |
| | PAD2 | OMIT, |
| | PCMStateType | OMIT } |

| ASN.1 Type Constraint Declaration | | |
|---|---|---|
| **Constraint Name** | : | PORTPCMState_Resp |
| **Structured Type** | : | PORTPCMState |
| **Derivation Path** | : | |
| **Comments** | : | PORT attribute. |

| Constraint Value | | |
|---|---|---|
| { | Parameter_Type | ‘403E’H, |
| | Parameter_Length | ‘0008’H, |
| | Resource_Index | ?, |
| | PAD2 | PAD_2, |
| | PCMStateType | PCMState_Q } |

| ASN.1 Type Constraint Declaration | | |
|---|---|---|
| **Constraint Name** | : | PORTPCMState_IUT |
| **Structured Type** | : | PORTPCMState |
| **Derivation Path** | : | PORTPCMState_Resp |
| **Comments** | : | PORT attribute. |

| Constraint Value | | | |
|---|---|---|---|
| REPLACE | Resource_Index | BY | P_Indx, |
| REPLACE | PCMStateType | BY | PCMState_A } |

| ASN.1 Type Constraint Declaration | | |
|---|---|---|
| **Constraint Name** | : | PORTPC_Withhold_Req |
| **Structured Type** | : | PORTPC_Withhold |
| **Derivation Path** | : | |
| **Comments** | : | PORT attribute. |

| Constraint Value | | |
|---|---|---|
| { | Parameter_Type | ‘403F’H, |
| | Parameter_Length | ‘0008’H, |
| | Resource_Index | P_Indx, --assume index of port A-- |
| | PAD2 | OMIT, |
| | PC_WithholdType | OMIT } |



Copyright International Organization for Standardization
Provided by IHS under license with ISO
No reproduction or networking permitted without license from IHS
Not for Resale

| ASN.1 Type Constraint Declaration | | |
|---|---|---|
| **Constraint Name** | : | PORTPC_Withhold_Resp |
| **Structured Type** | : | PORTPC_Withhold |
| **Derivation Path** | : | |
| **Comments** | : | PORT attribute. |

| Constraint Value | | |
|---|---|---|
| { | Parameter_Type | ‘403F’H, |
| | Parameter_Length | ‘0008’H, |
| | Resource_Index | ?, |
| | PAD2 | PAD_2, |
| | PC_WithholdType | PC_Withhold_Q } |

| ASN.1 Type Constraint Declaration | | |
|---|---|---|
| **Constraint Name** | : | PORTPC_Withhold_IUT |
| **Structured Type** | : | PORTPC_Withhold |
| **Derivation Path** | : | PORTPC_Withhold_Resp |
| **Comments** | : | PORT attribute. |

| Constraint Value | | | |
|---|---|---|---|
| REPLACE | Resource_Index | BY | P_Indx, |
| REPLACE | PC_WithholdType | BY | PC_Withhold_N |

| ASN.1 Type Constraint Declaration | | |
|---|---|---|
| **Constraint Name** | : | PORTLerFlag_Resp |
| **Structured Type** | : | PORTLerFlag |
| **Derivation Path** | : | |
| **Comments** | : | PORT attribute. |

| Constraint Value | | |
|---|---|---|
| { | Parameter_Type | ‘4040’H, |
| | Parameter_Length | ‘0008’H, |
| | Resource_Index | ?, |
| | PAD3 | PAD_3, |
| | LerFlag | ? } |

| ASN.1 Type Constraint Declaration | | |
|---|---|---|
| **Constraint Name** | : | PORTHardwarePresent_Req |
| **Structured Type** | : | PORTHardwarePresent |
| **Derivation Path** | : | |
| **Comments** | : | PORT attribute. |

| Constraint Value | | |
|---|---|---|
| { | Parameter_Type | ‘4041’H, |
| | Parameter_Length | ‘0008’H, |
| | Resource_Index | P_Indx, |
| | PAD2 | OMIT, |
| | HWPresent | OMIT } |


Copyright International Organization for Standardization
Provided by IHS under license with ISO
No reproduction or networking permitted without license from IHS
Not for Resale

| ASN.1 Type Constraint Declaration | | |
|---|---|---|
| **Constraint Name** | : | PORTHardwarePresent_Resp |
| **Structured Type** | : | PORTHardwarePresent |
| **Derivation Path** | : | |
| **Comments** | : | PORT attribute. |

| Constraint Value | | |
|---|---|---|
| { | Parameter_Type | ‘4041’H, |
| | Parameter_Length | ‘0008’H, |
| | Resource_Index | ?, |
| | PAD2 | PAD_2, |
| | HWPresent | Present_Q } |

| ASN.1 Type Constraint Declaration | | |
|---|---|---|
| **Constraint Name** | : | PORTHardwarePresent_IUT |
| **Structured Type** | : | PORTHardwarePresent |
| **Derivation Path** | : | PORTHardwarePresent_Resp |
| **Comments** | : | PORT attribute. |

| Constraint Value | | | |
|---|---|---|---|
| REPLACE | Resource_Index | BY | P_Indx, |
| REPLACE | HWPresent | BY | Present_1 |

### 10.3.2.5 ASN.1 Type Constraint for Actions and Notifications

#### 10.3.2.5.1 Actions

| ASN.1 Type Constraint Declaration | | |
|---|---|---|
| **Constraint Name** | : | SMTStationAction_Q |
| **Structured Type** | : | SMTStationAction |
| **Derivation Path** | : | |
| **Comments** | : | SMT action. |

| Constraint Value | | |
|---|---|---|
| { | Parameter_Type | ‘103C’H, |
| | Parameter_Length | ‘0004’H, |
| | PAD2 | PAD_2, |
| | SMTAction | ActionInfo_Q } |

| ASN.1 Type Constraint Declaration | | |
|---|---|---|
| **Constraint Name** | : | SMTStationAction_DisableA |
| **Structured Type** | : | SMTStationAction |
| **Derivation Path** | : | SMTStationAction_Q |
| **Comments** | : | SMT action. |

| Constraint Value | | | |
|---|---|---|---|
| REPLACE | SMTAction | BY | ActionInfo_DisA |



Copyright International Organization for Standardization
Provided by IHS under license with ISO
No reproduction or networking permitted without license from IHS
Not for Resale

| ASN.1 Type Constraint Declaration | | | |
|---|---|---|---|
| **Constraint Name** : SMTStationAction_DisableB<br>**Structured Type** : SMTStationAction<br>**Derivation Path** : SMTStationAction_Q<br>**Comments** : SMT action. | | | |
| **Constraint Value** | | | |
| REPLACE | SMTAction | BY | ActionInfo_DisB |

### 10.3.2.5.2 Notifications

| ASN.1 Type Constraint Declaration | | |
|---|---|---|
| **Constraint Name** : SMTHoldCondition_Q<br>**Structured Type** : SMTHoldCondition<br>**Derivation Path** :<br>**Comments** : SMT notification. | | |
| **Constraint Value** | | |
| { | Parameter_Type | '1047'H, |
| | Parameter_Length | '0008'H, |
| | PAD3 | PAD_3, |
| | ConditionState | ?, |
| | PAD2 | PAD_2, |
| | HoldCondition | HoldState_Q } |

| ASN.1 Type Constraint Declaration | | | |
|---|---|---|---|
| **Constraint Name** : SMTHoldCondition_HP<br>**Structured Type** : SMTHoldCondition<br>**Derivation Path** : SMTHoldCondition_Q<br>**Comments** : SMT notification. | | | |
| **Constraint Value** | | | |
| REPLACE | ConditionState | BY | TRUE, |
| REPLACE | HoldCondition | BY | HoldState_HP |

| ASN.1 Type Constraint Declaration | | | |
|---|---|---|---|
| **Constraint Name** : SMTHoldCondition_HS<br>**Structured Type** : SMTHoldCondition<br>**Derivation Path** : SMTHoldCondition_HP<br>**Comments** : SMT notification. | | | |
| **Constraint Value** | | | |
| REPLACE | HoldCondition | BY | HoldState_HS |


Copyright International Organization for Standardization
Provided by IHS under license with ISO
No reproduction or networking permitted without license from IHS
Not for Resale

| ASN.1 Type Constraint Declaration | | |
|---|---|---|
| **Constraint Name** | : | SMTPeerWrapCondition_Q |
| **Structured Type** | : | SMTPeerWrapCondition |
| **Derivation Path** | : | |
| **Comments** | : | SMT notification. |

**Constraint Value**

```
{       Parameter_Type          ‘1048’H,
        Parameter_Length        ‘0008’H,
        PAD3                    PAD_3,
        ConditionState          ?,
        PAD2                    PAD_2,
        PeerWrapCondition       CF_State_Q    }
```

| ASN.1 Type Constraint Declaration | | |
|---|---|---|
| **Constraint Name** | : | SMTPeerWrapCondition_CWB |
| **Structured Type** | : | SMTPeerWrapCondition |
| **Derivation Path** | : | SMTPeerWrapCondition_Q |
| **Comments** | : | SMT notification. |

**Constraint Value**

```
REPLACE     ConditionState          BY      TRUE,
REPLACE     PeerWrapCondition       BY      CF_State_Cwrpb
```

| ASN.1 Type Constraint Declaration | | |
|---|---|---|
| **Constraint Name** | : | SMTPeerWrapCondition_CWA |
| **Structured Type** | : | SMTPeerWrapCondition |
| **Derivation Path** | : | SMTPeerWrapCondition_Q |
| **Comments** | : | SMT notification. |

**Constraint Value**

```
REPLACE     ConditionState          BY      TRUE,
REPLACE     PeerWrapCondition       BY      CF_State_Cwrpa
```

| ASN.1 Type Constraint Declaration | | |
|---|---|---|
| **Constraint Name** | : | MACDuplicateAddressCondition_UNDA |
| **Structured Type** | : | MACDuplicateAddressCondition |
| **Derivation Path** | : | |
| **Comments** | : | MAC notification. |

**Constraint Value**

```
{       Parameter_Type          ‘208C’H,
        Parameter_Length        ‘0018’H,
        Resource_Index          M_Indx,
        PAD3                    PAD_3,
        ConditionState          TRUE,
        PAD2                    PAD_2,
        DupCondition            DupCondition_UNDA,
        LongAddress             TESTER_ADDRESS,
        UNALong                 ?       }
```



Copyright International Organization for Standardization
Provided by IHS under license with ISO
No reproduction or networking permitted without license from IHS
Not for Resale

### 10.3.2.6 Common Type Constraint Definitions

| ASN.1 Type Constraint Declaration | |
|---|---|
| **Constraint Name** | : ActionInfo_Q |
| **Structured Type** | : ActionInfo |
| **Derivation Path** | : |
| **Comments** | : Common type constraint definition. |
| **Constraint Value** | |
| ? | |

| ASN.1 Type Constraint Declaration | |
|---|---|
| **Constraint Name** | : ActionInfo_DisA |
| **Structured Type** | : ActionInfo |
| **Derivation Path** | : |
| **Comments** | : Common type constraint definition. |
| **Constraint Value** | |
| ‘0004’H --disable_a-- | |

| ASN.1 Type Constraint Declaration | |
|---|---|
| **Constraint Name** | : ActionInfo_DisB |
| **Structured Type** | : ActionInfo |
| **Derivation Path** | : |
| **Comments** | : Common type constraint definition. |
| **Constraint Value** | |
| ‘0005’H --disable_b-- | |

| ASN.1 Type Constraint Declaration | |
|---|---|
| **Constraint Name** | : AvailablePaths_Q |
| **Structured Type** | : AvailablePathsType |
| **Derivation Path** | : |
| **Comments** | : Common type constraint definition. |
| **Constraint Value** | |
| ‘00000???’B | |

| ASN.1 Type Constraint Declaration | |
|---|---|
| **Constraint Name** | : AvailablePaths_PS |
| **Structured Type** | : AvailablePathsType |
| **Derivation Path** | : |
| **Comments** | : Common type constraint definition. |
| **Constraint Value** | |
| ‘00000011’B --primary and secondary paths-- | |

--`,,```,,,,````-`-`,,`,,`,`,,`---



Copyright International Organization for Standardization
Provided by IHS under license with ISO
No reproduction or networking permitted without license from IHS
Not for Resale

| ASN.1 Type Constraint Declaration | |
|---|---|
| **Constraint Name** | : BridgeType_Q |
| **Structured Type** | : BridgeType |
| **Derivation Path** | : |
| **Comments** | : Common type constraint definition. |
| **Constraint Value** | |
| ‘0000000000000???’B | |

| ASN.1 Type Constraint Declaration | |
|---|---|
| **Constraint Name** | : Capabilities_Q |
| **Structured Type** | : Capabilities |
| **Derivation Path** | : |
| **Comments** | : Common type constraint definition. |
| **Constraint Value** | |
| ‘00000000000000??’B --Refer to PIXIT 7& 8-- | |

| ASN.1 Type Constraint Declaration | |
|---|---|
| **Constraint Name** | : Capabilities_H |
| **Structured Type** | : Capabilities |
| **Derivation Path** | : |
| **Comments** | : Common type constraint definition. |
| **Constraint Value** | |
| ‘0000000000000001’B --holdavailable-- | |

| ASN.1 Type Constraint Declaration | |
|---|---|
| **Constraint Name** | : Capabilities_W |
| **Structured Type** | : Capabilities |
| **Derivation Path** | : |
| **Comments** | : Common type constraint definition. |
| **Constraint Value** | |
| ‘0000000000000010’B --cf_wrap_ab-- | |

| ASN.1 Type Constraint Declaration | |
|---|---|
| **Constraint Name** | : CF_State_Q |
| **Structured Type** | : CF_State |
| **Derivation Path** | : |
| **Comments** | : Common type constraint definition. |
| **Constraint Value** | |
| ? | |



Copyright International Organization for Standardization
Provided by IHS under license with ISO
No reproduction or networking permitted without license from IHS
Not for Resale

| ASN.1 Type Constraint Declaration | |
|---|---|
| **Constraint Name** | : CF_State_Thru |
| **Structured Type** | : CF_State |
| **Derivation Path** | : |
| **Comments** | : Common type constraint definition. |
| **Constraint Value** | |
| ‘000C’H | --Thru-- |

| ASN.1 Type Constraint Declaration | |
|---|---|
| **Constraint Name** | : CF_State_Cwrpa |
| **Structured Type** | : CF_State |
| **Derivation Path** | : |
| **Comments** | : Common type constraint definition. |
| **Constraint Value** | |
| ‘0009’H | --c_wrap_a-- |

| ASN.1 Type Constraint Declaration | |
|---|---|
| **Constraint Name** | : CF_State_Cwrpb |
| **Structured Type** | : CF_State |
| **Derivation Path** | : |
| **Comments** | : Common type constraint definition. |
| **Constraint Value** | |
| ‘000A’H | --c_wrap_b-- |

| ASN.1 Type Constraint Declaration | |
|---|---|
| **Constraint Name** | : CF_State_Wrps |
| **Structured Type** | : CF_State |
| **Derivation Path** | : |
| **Comments** | : Common type constraint definition. |
| **Constraint Value** | |
| ‘0008’H | --wrap_s-- |

| ASN.1 Type Constraint Declaration | |
|---|---|
| **Constraint Name** | : CF_State_Wrpab |
| **Structured Type** | : CF_State |
| **Derivation Path** | : |
| **Comments** | : Common type constraint definition. |
| **Constraint Value** | |
| ‘0007’H | --wrap_ab-- |


Copyright International Organization for Standardization
Provided by IHS under license with ISO
No reproduction or networking permitted without license from IHS
Not for Resale

| ASN.1 Type Constraint Declaration | |
|---|---|
| **Constraint Name** | : ConfigPolicy_Q |
| **Structured Type** | : ConfigPolicyType |
| **Derivation Path** | : |
| **Comments** | : Common type constraint definition. |
| **Constraint Value** | |
| '000000000000000?'B --Refer to PIXIT 7-- | |

| ASN.1 Type Constraint Declaration | |
|---|---|
| **Constraint Name** | : Connection_Q |
| **Structured Type** | : Connection |
| **Derivation Path** | : |
| **Comments** | : Common type constraint definition. |
| **Constraint Value** | |
| '1??????????????'B | |

| ASN.1 Type Constraint Declaration | |
|---|---|
| **Constraint Name** | : Connection_Test |
| **Structured Type** | : Connection |
| **Derivation Path** | : |
| **Comments** | : Common type constraint definition. |
| **Constraint Value** | |
| '1000001101100101'B<br>--Assume that rejectA-A, rejectA-S, rejectB-B, rejectB-S, rejectS-A, rejectS-B and rejectM-M is the desired connection policy --<br>--requested by tester's PMF set request frame. Note: Enter your own desired connectionpolicy value as you please.-- | |

| ASN.1 Type Constraint Declaration | |
|---|---|
| **Constraint Name** | : ConnectionPolicies_Q |
| **Structured Type** | : ConnectPolicies |
| **Derivation Path** | : |
| **Comments** | : Common type constraint definition. |
| **Constraint Value** | |
| '000000??'B | |



Copyright International Organization for Standardization
Provided by IHS under license with ISO
No reproduction or networking permitted without license from IHS
Not for Resale

| ASN.1 Type Constraint Declaration | |
|---|---|
| **Constraint Name** | : ConnectState_Q |
| **Structured Type** | : ConnectState |
| **Derivation Path** | : |
| **Comments** | : Common type constraint definition. |
| **Constraint Value** | |
| ? | |

| ASN.1 Type Constraint Declaration | |
|---|---|
| **Constraint Name** | : ConnectState_A |
| **Structured Type** | : ConnectState |
| **Derivation Path** | : |
| **Comments** | : Common type constraint definition. |
| **Constraint Value** | |
| ‘0003’H --active-- | |

| ASN.1 Type Constraint Declaration | |
|---|---|
| **Constraint Name** | : CurrentPath_Q |
| **Structured Type** | : CurrentPathType |
| **Derivation Path** | : |
| **Comments** | : Common type constraint definition. |
| **Constraint Value** | |
| ? | |

| ASN.1 Type Constraint Declaration | |
|---|---|
| **Constraint Name** | : DupAddressTest_Q |
| **Structured Type** | : DupAddressTest |
| **Derivation Path** | : |
| **Comments** | : Common type constraint definition. |
| **Constraint Value** | |
| ? | |


Copyright International Organization for Standardization
Provided by IHS under license with ISO
No reproduction or networking permitted without license from IHS
Not for Resale

| ASN.1 Type Constraint Declaration | |
|---|---|
| **Constraint Name** | : DupAddressTest_P |
| **Structured Type** | : DupAddressTest |
| **Derivation Path** | : |
| **Comments** | : Common type constraint definition. |
| **Constraint Value** | |
| ‘0001’H --pass-- | |

| ASN.1 Type Constraint Declaration | |
|---|---|
| **Constraint Name** | : DupAddressTest_F |
| **Structured Type** | : DupAddressTest |
| **Derivation Path** | : |
| **Comments** | : Common type constraint definition. |
| **Constraint Value** | |
| ‘0002’H --fail-- | |

| ASN.1 Type Constraint Declaration | |
|---|---|
| **Constraint Name** | : DupCondition_UNDA |
| **Structured Type** | : DupConditionType |
| **Derivation Path** | : |
| **Comments** | : Common type constraint definition. |
| **Constraint Value** | |
| ‘0000000000000010’H --UNDA_Flag-- | |

| ASN.1 Type Constraint Declaration | |
|---|---|
| **Constraint Name** | : DuplAddress_Q |
| **Structured Type** | : DuplAddressType |
| **Derivation Path** | : |
| **Comments** | : Common type constraint definition. |
| **Constraint Value** | |
| ‘000000??’B | |

| ASN.1 Type Constraint Declaration | |
|---|---|
| **Constraint Name** | : DuplAddress_R |
| **Structured Type** | : DuplAddressType |
| **Derivation Path** | : |
| **Comments** | : Common type constraint definition. |
| **Constraint Value** | |
| ‘00000000’B --no duplicate address on the ring-- | |



Copyright International Organization for Standardization
Provided by IHS under license with ISO
No reproduction or networking permitted without license from IHS
Not for Resale

| ASN.1 Type Constraint Declaration | |
|---|---|
| **Constraint Name** | : DuplAddress_S |
| **Structured Type** | : DuplAddressType |
| **Derivation Path** | : |
| **Comments** | : Common type constraint definition. |
| **Constraint Value** | |
| ‘00000001’B --MyDuplicate bit SET-- | |

| ASN.1 Type Constraint Declaration | |
|---|---|
| **Constraint Name** | : ECMState_Q |
| **Structured Type** | : ECMState |
| **Derivation Path** | : |
| **Comments** | : Common type constraint definition. |
| **Constraint Value** | |
| ? | |

| ASN.1 Type Constraint Declaration | |
|---|---|
| **Constraint Name** | : FS_Functions_Q |
| **Structured Type** | : FS_Functions |
| **Derivation Path** | : |
| **Comments** | : Common type constraint definition. |
| **Constraint Value** | |
| ‘0000000000000???’B | |


Copyright International Organization for Standardization
Provided by IHS under license with ISO
No reproduction or networking permitted without license from IHS
Not for Resale

| ASN.1 Type Constraint Declaration | |
|---|---|
| **Constraint Name** | : HoldState_Q |
| **Structured Type** | : HoldState |
| **Derivation Path** | : |
| **Comments** | : Common type constraint definition. |
| **Constraint Value** | |
| ? | |

| ASN.1 Type Constraint Declaration | |
|---|---|
| **Constraint Name** | : HoldState_HP |
| **Structured Type** | : HoldState |
| **Derivation Path** | : |
| **Comments** | : Common type constraint definition. |
| **Constraint Value** | |
| ‘0001’H | --holding_prm-- |

| ASN.1 Type Constraint Declaration | |
|---|---|
| **Constraint Name** | : HoldState_HS |
| **Structured Type** | : HoldState |
| **Derivation Path** | : |
| **Comments** | : Common type constraint definition. |
| **Constraint Value** | |
| ‘0002’H | --holding_sec-- |

| ASN.1 Type Constraint Declaration | |
|---|---|
| **Constraint Name** | : HoldState_NH |
| **Structured Type** | : HoldState |
| **Derivation Path** | : |
| **Comments** | : Common type constraint definition. |
| **Constraint Value** | |
| ‘0000’H | --not holding-- |

| ASN.1 Type Constraint Declaration | |
|---|---|
| **Constraint Name** | : LineState_S |
| **Structured Type** | : LineState |
| **Derivation Path** | : |
| **Comments** | : Common type constraint definition. |
| **Constraint Value** | |
| * | |



Copyright International Organization for Standardization
Provided by IHS under license with ISO
No reproduction or networking permitted without license from IHS
Not for Resale

| ASN.1 Type Constraint Declaration | |
|---|---|
| **Constraint Name** | : LineState_Pdr |
| **Structured Type** | : LineState |
| **Derivation Path** | : |
| **Comments** | : Common type constraint definition. |
| **Constraint Value** | |
| ‘0004’H --pdr (active)-- | |

| ASN.1 Type Constraint Declaration | |
|---|---|
| **Constraint Name** | : LongAddressSet_S |
| **Structured Type** | : LongAddressSet |
| **Derivation Path** | : |
| **Comments** | : Common type constraint definition. |
| **Constraint Value** | |
| { LongAddressType * } | |

| ASN.1 Type Constraint Declaration | |
|---|---|
| **Constraint Name** | : LongAddressSet_IUT |
| **Structured Type** | : LongAddressSet |
| **Derivation Path** | : |
| **Comments** | : Common type constraint definition. |
| **Constraint Value** | |
| { LongAddressType LONG_GRP_ADD } | |

| ASN.1 Type Constraint Declaration | |
|---|---|
| **Constraint Name** | : PathConfig_Q |
| **Structured Type** | : PathConfig |
| **Derivation Path** | : |
| **Comments** | : Common type constraint definition. |
| **Constraint Value** | |
| {ResourceTagType ResourceTag_Q } | |

| ASN.1 Type Constraint Declaration | |
|---|---|
| **Constraint Name** | : PCMState_Q |
| **Structured Type** | : PCMState |
| **Derivation Path** | : |
| **Comments** | : Common type constraint definition. |
| **Constraint Value** | |
| ? | |


--`,,```,,,,````-`-`,,`,,`,`,,`---
Copyright International Organization for Standardization
Provided by IHS under license with ISO
No reproduction or networking permitted without license from IHS
Not for Resale

| ASN.1 Type Constraint Declaration | |
|---|---|
| **Constraint Name** | : PCMState_A |
| **Structured Type** | : PCMState |
| **Derivation Path** | : |
| **Comments** | : Common type constraint definition. |
| **Constraint Value** | |
| ‘0008’H | --active-- |

| ASN.1 Type Constraint Declaration | |
|---|---|
| **Constraint Name** | : PC_Withhold_Q |
| **Structured Type** | : PC_Withhold |
| **Derivation Path** | : |
| **Comments** | : Common type constraint definition. |
| **Constraint Value** | |
| ? | |

| ASN.1 Type Constraint Declaration | |
|---|---|
| **Constraint Name** | : PC_Withhold_N |
| **Structured Type** | : PC_Withhold |
| **Derivation Path** | : |
| **Comments** | : Common type constraint definition. |
| **Constraint Value** | |
| ‘0000’H - | -none-- |

| ASN.1 Type Constraint Declaration | |
|---|---|
| **Constraint Name** | : PermittedPaths_Q |
| **Structured Type** | : PermittedPaths |
| **Derivation Path** | : |
| **Comments** | : Common type constraint definition. |
| **Constraint Value** | |
| ‘????????’B | |

| ASN.1 Type Constraint Declaration | |
|---|---|
| **Constraint Name** | : PermittedPaths_MAC1 |
| **Structured Type** | : PermittedPaths |
| **Derivation Path** | : |
| **Comments** | : Common type constraint definition. |
| **Constraint Value** | |
| ‘00000111’B | --default value of MAC permitted paths-- |



Copyright International Organization for Standardization
Provided by IHS under license with ISO
No reproduction or networking permitted without license from IHS
Not for Resale

| ASN.1 Type Constraint Declaration | |
|---|---|
| **Constraint Name** | : PermittedPaths_MAC2 |
| **Structured Type** | : PermittedPaths |
| **Derivation Path** | : |
| **Comments** | : Common type constraint definition. |
| **Constraint Value** | |
| ‘00000100’B | --primary-alternate-- |

| ASN.1 Type Constraint Declaration | |
|---|---|
| **Constraint Name** | : PermittedPaths_L |
| **Structured Type** | : PermittedPaths |
| **Derivation Path** | : |
| **Comments** | : Common type constraint definition. |
| **Constraint Value** | |
| ‘00000001’B | --local-- |

| ASN.1 Type Constraint Declaration | |
|---|---|
| **Constraint Name** | : PermittedPaths_TA |
| **Structured Type** | : PermittedPaths |
| **Derivation Path** | : |
| **Comments** | : Common type constraint definition. |
| **Constraint Value** | |
| ‘00011001’B | --local, concatenated-alternate and secondary-preferred-- |

| ASN.1 Type Constraint Declaration | |
|---|---|
| **Constraint Name** | : PermittedPaths_TB |
| **Structured Type** | : PermittedPaths |
| **Derivation Path** | : |
| **Comments** | : Common type constraint definition. |
| **Constraint Value** | |
| ‘00101001’B | --local, concatenated-alternate and primary-preferred-- |

| ASN.1 Type Constraint Declaration | |
|---|---|
| **Constraint Name** | : PermittedPaths_TM |
| **Structured Type** | : PermittedPaths |
| **Derivation Path** | : |
| **Comments** | : Common type constraint definition. |
| **Constraint Value** | |
| ‘00000111’B | --local, secondary-alternate and primary-alternate-- |


Copyright International Organization for Standardization
Provided by IHS under license with ISO
No reproduction or networking permitted without license from IHS
Not for Resale

| ASN.1 Type Constraint Declaration | |
|---|---|
| **Constraint Name** | : PermittedPaths_PA |
| **Structured Type** | : PermittedPaths |
| **Derivation Path** | : |
| **Comments** | : Common type constraint definition. |
| **Constraint Value** | |
| ‘10011001’B | --local, concatenated-alternate, secondary-preferred and thru-- |

| ASN.1 Type Constraint Declaration | |
|---|---|
| **Constraint Name** | : PermittedPaths_PB1 |
| **Structured Type** | : PermittedPaths |
| **Derivation Path** | : |
| **Comments** | : Common type constraint definition. |
| **Constraint Value** | |
| ‘11100001’B | --local, primary-preferred, concatenated-preferred and thru-- |

| ASN.1 Type Constraint Declaration | |
|---|---|
| **Constraint Name** | : PermittedPaths_PB2 |
| **Structured Type** | : PermittedPaths |
| **Derivation Path** | : |
| **Comments** | : Common type constraint definition. |
| **Constraint Value** | |
| ‘10101001’B | --local, concatenated-alternate, primary-preferred and thru-- |

| ASN.1 Type Constraint Declaration | |
|---|---|
| **Constraint Name** | : PermittedPaths_PS |
| **Structured Type** | : PermittedPaths |
| **Derivation Path** | : |
| **Comments** | : Common type constraint definition. |
| **Constraint Value** | |
| ‘00101001’B | --local, concatenated-alternate and primary-preferred-- |

| ASN.1 Type Constraint Declaration | |
|---|---|
| **Constraint Name** | : PermittedPaths_PM |
| **Structured Type** | : PermittedPaths |
| **Derivation Path** | : |
| **Comments** | : Common type constraint definition. |
| **Constraint Value** | |
| ‘00000000’B | |



Copyright International Organization for Standardization
Provided by IHS under license with ISO
No reproduction or networking permitted without license from IHS
Not for Resale

| ASN.1 Type Constraint Declaration | |
|---|---|
| **Constraint Name** | : PMDClass_Q |
| **Structured Type** | : PMDClass |
| **Derivation Path** | : |
| **Comments** | : Common type constraint definition. |
| **Constraint Value** | |
| ? | |

| ASN.1 Type Constraint Declaration | |
|---|---|
| **Constraint Name** | : PortType_Q |
| **Structured Type** | : PortTypeType |
| **Derivation Path** | : |
| **Comments** | : Common type constraint definition. |
| **Constraint Value** | |
| ? | |

| ASN.1 Type Constraint Declaration | |
|---|---|
| **Constraint Name** | : PortType_A |
| **Structured Type** | : PortTypeType |
| **Derivation Path** | : |
| **Comments** | : Common type constraint definition. |
| **Constraint Value** | |
| ‘0000’H --port A-- | |

| ASN.1 Type Constraint Declaration | |
|---|---|
| **Constraint Name** | : PortType_B |
| **Structured Type** | : PortTypeType |
| **Derivation Path** | : |
| **Comments** | : Common type constraint definition. |
| **Constraint Value** | |
| ‘0001’H --port B-- | |

| ASN.1 Type Constraint Declaration | |
|---|---|
| **Constraint Name** | : Present_Q |
| **Structured Type** | : Present |
| **Derivation Path** | : |
| **Comments** | : Common type constraint definition. |
| **Constraint Value** | |
| ? | |


--`,,```,,,,````-`-`,,`,,`,`,,`---
Copyright International Organization for Standardization
Provided by IHS under license with ISO
No reproduction or networking permitted without license from IHS
Not for Resale

| ASN.1 Type Constraint Declaration | |
|---|---|
| **Constraint Name** | : Present_1 |
| **Structured Type** | : Present |
| **Derivation Path** | : |
| **Comments** | : Common type constraint definition. |
| **Constraint Value** | |
| ‘0001’H - -Present-- | |

| ASN.1 Type Constraint Declaration | |
|---|---|
| **Constraint Name** | : RequestedPaths_Q |
| **Structured Type** | : RequestedPathsType |
| **Derivation Path** | : |
| **Comments** | : Common type constraint definition. |
| **Constraint Value** | |
| { none PermittedPaths_Q,<br>tree PermittedPaths_Q,<br>peer PermittedPaths_Q } | |

| ASN.1 Type Constraint Declaration | |
|---|---|
| **Constraint Name** | : RequestedPaths_A |
| **Structured Type** | : RequestedPathsType |
| **Derivation Path** | : |
| **Comments** | : Common type constraint definition. |
| **Constraint Value** | |
| { none PermittedPaths_L,<br>tree PermittedPaths_TA,<br>peer PermittedPaths_PA } | |

| ASN.1 Type Constraint Declaration | |
|---|---|
| **Constraint Name** | : RequestedPaths_B1 |
| **Structured Type** | : RequestedPathsType |
| **Derivation Path** | : |
| **Comments** | : Common type constraint definition. |
| **Constraint Value** | |
| { none PermittedPaths_L,<br>tree PermittedPaths_TB,<br>peer PermittedPaths_PB1 } | |



Copyright International Organization for Standardization
Provided by IHS under license with ISO
No reproduction or networking permitted without license from IHS
Not for Resale

| ASN.1 Type Constraint Declaration | | |
|---|---|---|
| **Constraint Name** | : | RequestedPaths_B2 |
| **Structured Type** | : | RequestedPathsType |
| **Derivation Path** | : | |
| **Comments** | : | Common type constraint definition. |

| Constraint Value | | |
|---|---|---|
| { | none | PermittedPaths_L, |
| | tree | PermittedPaths_TB, |
| | peer | PermittedPaths_PB2 } |

| ASN.1 Type Constraint Declaration | | |
|---|---|---|
| **Constraint Name** | : | RequestedPaths_S |
| **Structured Type** | : | RequestedPathsType |
| **Derivation Path** | : | |
| **Comments** | : | Common type constraint definition. |

| Constraint Value | | |
|---|---|---|
| { | none | PermittedPaths_L, |
| | tree | PermittedPaths_TB, |
| | peer | PermittedPaths_PS } |

| ASN.1 Type Constraint Declaration | | |
|---|---|---|
| **Constraint Name** | : | RequestedPaths_M |
| **Structured Type** | : | RequestedPathsType |
| **Derivation Path** | : | |
| **Comments** | : | Common type constraint definition. |

| Constraint Value | | |
|---|---|---|
| { | none | PermittedPaths_L, |
| | tree | PermittedPaths_TM, |
| | peer | PermittedPaths_PM } |

| ASN.1 Type Constraint Declaration | | |
|---|---|---|
| **Constraint Name** | : | ResourceTag_Q |
| **Structured Type** | : | ResourceTag |
| **Derivation Path** | : | |
| **Comments** | : | Common type constraint definition. |

| Constraint Value | | |
|---|---|---|
| { | resource_type | ResourceType_Q, |
| | resource_index | ?, |
| | current_path | CurrentPath_Q } |


Copyright International Organization for Standardization
Provided by IHS under license with ISO
No reproduction or networking permitted without license from IHS
Not for Resale

| ASN.1 Type Constraint Declaration | |
|---|---|
| **Constraint Name** | : ResourceType_Q |
| **Structured Type** | : ResourceType |
| **Derivation Path** | : |
| **Comments** | : Common type constraint definition. |
| **Constraint Value** | |
| ? | |

| ASN.1 Type Constraint Declaration | |
|---|---|
| **Constraint Name** | : RMTState_Q |
| **Structured Type** | : RMTState |
| **Derivation Path** | : |
| **Comments** | : Common type constraint definition. |
| **Constraint Value** | |
| ? | |

| ASN.1 Type Constraint Declaration | |
|---|---|
| **Constraint Name** | : RMTState_2 |
| **Structured Type** | : RMTState |
| **Derivation Path** | : |
| **Comments** | : Common type constraint definition. |
| **Constraint Value** | |
| ‘0002’H --Ring_Op-- | |

| ASN.1 Type Constraint Declaration | |
|---|---|
| **Constraint Name** | : SMTMACIndx |
| **Structured Type** | : Indexes |
| **Derivation Path** | : |
| **Comments** | : Common type constraint definition. |
| **Constraint Value** | |
| { ResourceId ‘0000’H } | |

| ASN.1 Type Constraint Declaration | |
|---|---|
| **Constraint Name** | : SMTPORTIndx |
| **Structured Type** | : Indexes |
| **Derivation Path** | : |
| **Comments** | : Common type constraint definition. |
| **Constraint Value** | |
| { ResourceId ‘0000’H } | |



Copyright International Organization for Standardization
Provided by IHS under license with ISO
No reproduction or networking permitted without license from IHS
Not for Resale

| ASN.1 Type Constraint Declaration | |
|---|---|
| **Constraint Name** | : ShortAddressSet_S |
| **Structured Type** | : ShortAddressSet |
| **Derivation Path** | : |
| **Comments** | : Common type constraint definition. |
| **Constraint Value** | |
| { ShortAddressType * } | |

| ASN.1 Type Constraint Declaration | |
|---|---|
| **Constraint Name** | : ShortAddressSet_IUT |
| **Structured Type** | : ShortAddressSet |
| **Derivation Path** | : |
| **Comments** | : Common type constraint definition. |
| **Constraint Value** | |
| { ShortAddressType SHORT_GRP_ADD } | |

| ASN.1 Type Constraint Declaration | |
|---|---|
| **Constraint Name** | : Status_Q |
| **Structured Type** | : Status |
| **Derivation Path** | : |
| **Comments** | : Common type constraint definition. |
| **Constraint Value** | |
| ? | |

| ASN.1 Type Constraint Declaration | |
|---|---|
| **Constraint Name** | : Status_T |
| **Structured Type** | : Status |
| **Derivation Path** | : |
| **Comments** | : Common type constraint definition. |
| **Constraint Value** | |
| ‘0002’H --thru-- | |

| ASN.1 Type Constraint Declaration | |
|---|---|
| **Constraint Name** | : Status_S |
| **Structured Type** | : Status |
| **Derivation Path** | : |
| **Comments** | : Common type constraint definition. |
| **Constraint Value** | |
| ‘0001’H --separated-- | |


Copyright International Organization for Standardization
Provided by IHS under license with ISO
No reproduction or networking permitted without license from IHS Not for Resale

| ASN.1 Type Constraint Declaration | |
|---|---|
| **Constraint Name** | : Status_C |
| **Structured Type** | : Status |
| **Derivation Path** | : |
| **Comments** | : Common type constraint definition. |
| **Constraint Value** | |
| ‘0000’H --concatenated-- | |

| ASN.1 Type Constraint Declaration | |
|---|---|
| **Constraint Name** | : Topology_Q |
| **Structured Type** | : TopologyType |
| **Derivation Path** | : |
| **Comments** | : Common type constraints definition. |
| **Constraint Value** | |
| ‘0?1?????’B --SRF protocol is enabled (initial value)-- | |

| ASN.1 Type Constraint Declaration | |
|---|---|
| **Constraint Name** | : Topology_05 |
| **Structured Type** | : TopologyType |
| **Derivation Path** | : |
| **Comments** | : Common type constraints definition. |
| **Constraint Value** | |
| ‘0?100000’B --normal topology with SRF protocol is enabled (initial value)-- | |

| ASN.1 Type Constraint Declaration | |
|---|---|
| **Constraint Name** | : TraceStatus_S |
| **Structured Type** | : TraceStatus |
| **Derivation Path** | : |
| **Comments** | : Common type constraint definition. |
| **Constraint Value** | |
| * | |



Copyright International Organization for Standardization
Provided by IHS under license with ISO
No reproduction or networking permitted without license from IHS
Not for Resale

### 10.3.2.7 SMT Information Field Constraint Declarations

| ASN.1 Type Constraint Declaration | | |
|---|---|---|
| **Constraint Name** : NIF_Data<br>**Structured Type** : NIF_Info<br>**Derivation Path** :<br>**Comments** : NIF information field. | | |
| **Constraint Value** | | |
| { | upstreamneighboraddress | UNA_UNKNOWN, |
| | stationdescriptor | StationDescriptor_Q, |
| | stationstate | StationState_Q, |
| | macframestatusfunctions | MACFrameStatusFunctions_Resp } |

| ASN.1 Type Constraint Declaration | | | |
|---|---|---|---|
| **Constraint Name** : NIF_IUT_Data1<br>**Structured Type** : NIF_Info<br>**Derivation Path** : NIF_Data<br>**Comments** : IUT NIF information field. | | | |
| **Constraint Value** | | | |
| REPLACE | stationdescriptor | BY | StationDescriptor_IUT |

| ASN.1 Type Constraint Declaration | | | |
|---|---|---|---|
| **Constraint Name** : NIF_IUT_Data2<br>**Structured Type** : NIF_Info<br>**Derivation Path** : NIF_Data<br>**Comments** : IUT NIF information field. | | | |
| **Constraint Value** | | | |
| REPLACE | upstreamneighboraddress | BY | UNA_TSTR, |
| REPLACE | stationdescriptor | BY | StationDescriptor_IUT |

| ASN.1 Type Constraint Declaration | | | |
|---|---|---|---|
| **Constraint Name** : NIF_TSTR_Data1<br>**Structured Type** : NIF_Info<br>**Derivation Path** : NIF_Data<br>**Comments** : Tester NIF information field. | | | |
| **Constraint Value** | | | |
| REPLACE | stationdescriptor | BY | StationDescriptor_TSTR, |
| REPLACE | stationstate | BY | StationState_TSTR |


Copyright International Organization for Standardization
Provided by IHS under license with ISO
No reproduction or networking permitted without license from IHS
Not for Resale

| ASN.1 Type Constraint Declaration | | | |
|---|---|---|---|
| **Constraint Name** : NIF_TSTR_Data2 | | | |
| **Structured Type** : NIF_Info | | | |
| **Derivation Path** : NIF_Data | | | |
| **Comments** : Tester NIF information field. | | | |
| **Constraint Value** | | | |
| REPLACE | upstreamneighboraddress | BY | UNA_IUT |
| REPLACE | stationdescriptor | BY | StationDescriptor_TSTR, |
| REPLACE | stationstate | BY | StationState_TSTR |

| ASN.1 Type Constraint Declaration | | | |
|---|---|---|---|
| **Constraint Name** : NIF_TSTR_Dup | | | |
| **Structured Type** : NIF_Info | | | |
| **Derivation Path** : NIF_Data | | | |
| **Comments** : Tester NIF information field with StationState.DuplAddress.MyDuplicate=SET. | | | |
| **Constraint Value** | | | |
| REPLACE | stationdescriptor | BY | StationDescriptor_TSTR, |
| REPLACE | stationstate | BY | StationState_Dup |

| ASN.1 Type Constraint Declaration | | |
|---|---|---|
| **Constraint Name** : SRF_Base | | |
| **Structured Type** : SRF_Info | | |
| **Derivation Path** : | | |
| **Comments** : SRF information field. | | |
| **Constraint Value** | | |
| { | timestamp | SMTTimeStamp_Resp, |
| | transitiontimestamp | SMTTransitionTimeStamp_Resp, |
| | eventcondition | ? } |

| ASN.1 Type Constraint Declaration | | | |
|---|---|---|---|
| **Constraint Name** : SRF_HP | | | |
| **Structured Type** : SRF_Info | | | |
| **Derivation Path** : SRF_Base | | | |
| **Comments** : SRF information field. | | | |
| **Constraint Value** | | | |
| REPLACE | eventcondition | BY | SMTHoldCondition_HP |

--`,,```,,,,````-`-`,,`,,`,`,,`---



Copyright International Organization for Standardization
Provided by IHS under license with ISO
No reproduction or networking permitted without license from IHS
Not for Resale

| ASN.1 Type Constraint Declaration | | | |
|---|---|---|---|
| **Constraint Name** : SRF_HS<br>**Structured Type** : SRF_Info<br>**Derivation Path** : SRF_Base<br>**Comments** : SRF information field. | | | |
| **Constraint Value** | | | |
| REPLACE | eventcondition | BY | SMTHoldCondition_HS |

| ASN.1 Type Constraint Declaration | | | |
|---|---|---|---|
| **Constraint Name** : SRF_CWB<br>**Structured Type** : SRF_Info<br>**Derivation Path** : SRF_Base<br>**Comments** : SRF information field. | | | |
| **Constraint Value** | | | |
| REPLACE | eventcondition | BY | SMTPeerWrapCondition_CWB |

| ASN.1 Type Constraint Declaration | | | |
|---|---|---|---|
| **Constraint Name** : SRF_CWA<br>**Structured Type** : SRF_Info<br>**Derivation Path** : SRF_Base<br>**Comments** : SRF information field. | | | |
| **Constraint Value** | | | |
| REPLACE | eventcondition | BY | SMTPeerWrapCondition_CWA |

| ASN.1 Type Constraint Declaration | | | |
|---|---|---|---|
| **Constraint Name** : SRF_UNDA<br>**Structured Type** : SRF_Info<br>**Derivation Path** : SRF_Base<br>**Comments** : SRF information field. | | | |
| **Constraint Value** | | | |
| REPLACE | eventcondition | BY | MACDuplicateAddressCondition_UNDA |

| ASN.1 Type Constraint Declaration | | |
|---|---|---|
| **Constraint Name** : PMFRequest_Base<br>**Structured Type** : PMFRequest_Info<br>**Derivation Path** :<br>**Comments** : PMF information field. | | |
| **Constraint Value** | | |
| { | authorization | Authorization_Req, |
| | setcount | SMTSetCount_Req, |
| | targetattribute ? | } |


Copyright International Organization for Standardization
Provided by IHS under license with ISO
No reproduction or networking permitted without license from IHS
Not for Resale

| ASN.1 Type Constraint Declaration | | | |
|---|---|---|---|
| **Constraint Name** : PMFRequest_SUD<br>**Structured Type** : PMFRequest_Info<br>**Derivation Path** : PMFRequest_Base<br>**Comments** : PMF information field. | | | |
| **Constraint Value** | | | |
| REPLACE | targetattribute | BY | SMTUserData_IUT |

| ASN.1 Type Constraint Declaration | | | |
|---|---|---|---|
| **Constraint Name** : PMFRequest_SCP<br>**Structured Type** : PMFRequest_Info<br>**Derivation Path** : PMFRequest_Base<br>**Comments** : PMF information field. | | | |
| **Constraint Value** | | | |
| REPLACE | targetattribute | BY | SMTConnectionPolicy_Test |

| ASN.1 Type Constraint Declaration | | | |
|---|---|---|---|
| **Constraint Name** : PMFRequest_TN<br>**Structured Type** : PMFRequest_Info<br>**Derivation Path** : PMFRequest_Base<br>**Comments** : PMF information field. | | | |
| **Constraint Value** | | | |
| REPLACE | targetattribute | BY | SMTT_Notify_Test |

| ASN.1 Type Constraint Declaration | | | |
|---|---|---|---|
| **Constraint Name** : PMFRequest_SRP<br>**Structured Type** : PMFRequest_Info<br>**Derivation Path** : PMFRequest_Base<br>**Comments** : PMF information field. | | | |
| **Constraint Value** | | | |
| REPLACE | targetattribute | BY | SMTStatRptPolicy_Test |

| ASN.1 Type Constraint Declaration | | | |
|---|---|---|---|
| **Constraint Name** : PMFRequest_TME<br>**Structured Type** : PMFRequest_Info<br>**Derivation Path** : PMFRequest_Base<br>**Comments** : PMF information field. | | | |
| **Constraint Value** | | | |
| REPLACE | targetattribute | BY | SMTTrace_MaxExpiration_Test |



Copyright International Organization for Standardization
Provided by IHS under license with ISO
No reproduction or networking permitted without license from IHS
Not for Resale

| ASN.1 Type Constraint Declaration | | | |
|---|---|---|---|
| **Constraint Name** : PMFRequest_MRP<br>**Structured Type** : PMFRequest_Info<br>**Derivation Path** : PMFRequest_Base<br>**Comments** : PMF information field. | | | |
| **Constraint Value** | | | |
| REPLACE | targetattribute | BY | MACRequestedPaths_IUT2 |

| ASN.1 Type Constraint Declaration | | | |
|---|---|---|---|
| **Constraint Name** : PMFRequest_PTR<br>**Structured Type** : PMFRequest_Info<br>**Derivation Path** : PMFRequest_Base<br>**Comments** : PMF information field. | | | |
| **Constraint Value** | | | |
| REPLACE | targetattribute | BY | PATHT_Rmode_IUT2 |

| ASN.1 Type Constraint Declaration | | | |
|---|---|---|---|
| **Constraint Name** : PMFRequest_PMLT<br>**Structured Type** : PMFRequest_Info<br>**Derivation Path** : PMFRequest_Base<br>**Comments** : PMF information field. | | | |
| **Constraint Value** | | | |
| REPLACE | targetattribute | BY | PORTMACLoop_Time_IUT2 |

| ASN.1 Type Constraint Declaration | | | |
|---|---|---|---|
| **Constraint Name** : PMFRequest_DisableA<br>**Structured Type** : PMFRequest_Info<br>**Derivation Path** : PMFRequest_Base<br>**Comments** : PMF information field. | | | |
| **Constraint Value** | | | |
| REPLACE | targetattribute | BY | SMTStationAction_DisableA |

| ASN.1 Type Constraint Declaration | | | |
|---|---|---|---|
| **Constraint Name** : PMFRequest_DisableB<br>**Structured Type** : PMFRequest_Info<br>**Derivation Path** : PMFRequest_Base<br>**Comments** : PMF information field. | | | |
| **Constraint Value** | | | |
| REPLACE | targetattribute | BY | SMTStationAction_DisableB |



Copyright International Organization for Standardization
Provided by IHS under license with ISO
No reproduction or networking permitted without license from IHS
Not for Resale

| ASN.1 Type Constraint Declaration | | |
|---|---|---|
| **Constraint Name** | : | PMFResponse_Base |
| **Structured Type** | : | PMFResponse_Info |
| **Derivation Path** | : | |
| **Comments** | : | PMF information field. |

| Constraint Value | | |
|---|---|---|
| { | reasoncode | ReasonCode_Q, |
| | timestamp | SMTTimeStamp_Resp, |
| | setcount | SMTSetCount_Resp, |
| | lastsetstationid | SMTLastSetStationId_Resp, |
| | requestedinfo ? | } |

| ASN.1 Type Constraint Declaration | | |
|---|---|---|
| **Constraint Name** | : | PMFResponse_MIBGrp |
| **Structured Type** | : | PMFResponse_Info |
| **Derivation Path** | : | PMFResponse_Base |
| **Comments** | : | PMF information field. |

| Constraint Value | | | |
|---|---|---|---|
| REPLACE | reasoncode | BY | ReasonCode_03, |
| REPLACE | requestedinfo | BY | MIBGrp_Resp |

| ASN.1 Type Constraint Declaration | | |
|---|---|---|
| **Constraint Name** | : | PMFResponse_SI |
| **Structured Type** | : | PMFResponse_Info |
| **Derivation Path** | : | PMFResponse_Base |
| **Comments** | : | PMF information field. |

| Constraint Value | | | |
|---|---|---|---|
| REPLACE | reasoncode | BY | ReasonCode_03, |
| REPLACE | requestedinfo | BY | SMTStationId_Resp |

| ASN.1 Type Constraint Declaration | | |
|---|---|---|
| **Constraint Name** | : | PMFResponse_SMD |
| **Structured Type** | : | PMFResponse_Info |
| **Derivation Path** | : | PMFResponse_Base |
| **Comments** | : | PMF information field. |

| Constraint Value | | | |
|---|---|---|---|
| REPLACE | reasoncode | BY | ReasonCode_03, |
| REPLACE | requestedinfo | BY | SMTManufacturerData_IUT |



Copyright International Organization for Standardization
Provided by IHS under license with ISO
No reproduction or networking permitted without license from IHS
Not for Resale

| ASN.1 Type Constraint Declaration | | | |
|---|---|---|---|
| **Constraint Name** : PMFResponse_SUD1 | | | |
| **Structured Type** : PMFResponse_Info | | | |
| **Derivation Path** : PMFResponse_Base | | | |
| **Comments** : PMF information field. | | | |
| **Constraint Value** | | | |
| REPLACE | reasoncode | BY | ReasonCode_03, |
| REPLACE | requestedinfo | BY | SMTUserData_Resp |

| ASN.1 Type Constraint Declaration | | | |
|---|---|---|---|
| **Constraint Name** : PMFResponse_SUD2 | | | |
| **Structured Type** : PMFResponse_Info | | | |
| **Derivation Path** : PMFResponse_Base | | | |
| **Comments** : PMF information field. | | | |
| **Constraint Value** | | | |
| REPLACE | reasoncode | BY | ReasonCode_03, |
| REPLACE | setcount | BY | SMTSetCount_New, |
| REPLACE | lastsetstationid | BY | SMTLastSetStationId_IUT, |
| REPLACE | requestedinfo | BY | SMTUserData_IUT |

| ASN.1 Type Constraint Declaration | | | |
|---|---|---|---|
| **Constraint Name** : PMFResponse_SMVI | | | |
| **Structured Type** : PMFResponse_Info | | | |
| **Derivation Path** : PMFResponse_Base | | | |
| **Comments** : PMF information field. | | | |
| **Constraint Value** | | | |
| REPLACE | reasoncode | BY | ReasonCode_03, |
| REPLACE | requestedinfo | BY | SMTMIBVersionId_IUT |

| ASN.1 Type Constraint Declaration | | | |
|---|---|---|---|
| **Constraint Name** : PMFResponse_MacCt | | | |
| **Structured Type** : PMFResponse_Info | | | |
| **Derivation Path** : PMFResponse_Base | | | |
| **Comments** : PMF information field. | | | |
| **Constraint Value** | | | |
| REPLACE | reasoncode | BY | ReasonCode_03, |
| REPLACE | requestedinfo | BY | SMTMac_Ct_IUT |


Copyright International Organization for Standardization
Provided by IHS under license with ISO
No reproduction or networking permitted without license from IHS
Not for Resale

| ASN.1 Type Constraint Declaration | | | |
|---|---|---|---|
| **Constraint Name** : PMFResponse_NonMasterCt<br>**Structured Type** : PMFResponse_Info<br>**Derivation Path** : PMFResponse_Base<br>**Comments** : PMF information field. | | | |
| **Constraint Value** | | | |
| REPLACE | reasoncode | BY | ReasonCode_03, |
| REPLACE | requestedinfo | BY | SMTNonMaster_Ct_IUT |

| ASN.1 Type Constraint Declaration | | | |
|---|---|---|---|
| **Constraint Name** : PMFResponse_MasterCt<br>**Structured Type** : PMFResponse_Info<br>**Derivation Path** : PMFResponse_Base<br>**Comments** : PMF information field. | | | |
| **Constraint Value** | | | |
| REPLACE | reasoncode | BY | ReasonCode_03, |
| REPLACE | requestedinfo | BY | SMTMaster_Ct_IUT |

| ASN.1 Type Constraint Declaration | | | |
|---|---|---|---|
| **Constraint Name** : PMFResponse_SAP<br>**Structured Type** : PMFResponse_Info<br>**Derivation Path** : PMFResponse_Base<br>**Comments** : PMF information field. | | | |
| **Constraint Value** | | | |
| REPLACE | reasoncode | BY | ReasonCode_03, |
| REPLACE | requestedinfo | BY | SMTAvailablePaths_IUT |

| ASN.1 Type Constraint Declaration | | | |
|---|---|---|---|
| **Constraint Name** : PMFResponse_SCC<br>**Structured Type** : PMFResponse_Info<br>**Derivation Path** : PMFResponse_Base<br>**Comments** : PMF information field. | | | |
| **Constraint Value** | | | |
| REPLACE | reasoncode | BY | ReasonCode_03, |
| REPLACE | requestedinfo | BY | SMTConfigCapabilities_IUT |



Copyright International Organization for Standardization
Provided by IHS under license with ISO
No reproduction or networking permitted without license from IHS
Not for Resale

| ASN.1 Type Constraint Declaration | | | |
|---|---|---|---|
| **Constraint Name** : PMFResponse_SCC1 | | | |
| **Structured Type** : PMFResponse_Info | | | |
| **Derivation Path** : PMFResponse_Base | | | |
| **Comments** : PMF information field. | | | |
| **Constraint Value** | | | |
| REPLACE | reasoncode | BY | ReasonCode_03, |
| REPLACE | requestedinfo | BY | SMTConfigCapabilities_IUT1 |

| ASN.1 Type Constraint Declaration | | | |
|---|---|---|---|
| **Constraint Name** : PMFResponse_SCC2 | | | |
| **Structured Type** : PMFResponse_Info | | | |
| **Derivation Path** : PMFResponse_Base | | | |
| **Comments** : PMF information field. | | | |
| **Constraint Value** | | | |
| REPLACE | reasoncode | BY | ReasonCode_03, |
| REPLACE | requestedinfo | BY | SMTConfigCapabilities_IUT2 |

| ASN.1 Type Constraint Declaration | | | |
|---|---|---|---|
| **Constraint Name** : PMFResponse_SCP1 | | | |
| **Structured Type** : PMFResponse_Info | | | |
| **Derivation Path** : PMFResponse_Base | | | |
| **Comments** : PMF information field. | | | |
| **Constraint Value** | | | |
| REPLACE | reasoncode | BY | ReasonCode_03, |
| REPLACE | requestedinfo | BY | SMTConnectionPolicy_IUT |

| ASN.1 Type Constraint Declaration | | | |
|---|---|---|---|
| **Constraint Name** : PMFResponse_SCP2 | | | |
| **Structured Type** : PMFResponse_Info | | | |
| **Derivation Path** : PMFResponse_Base | | | |
| **Comments** : PMF information field. | | | |
| **Constraint Value** | | | |
| REPLACE | reasoncode | BY | ReasonCode_03, |
| REPLACE | setcount | BY | SMTSetCount_New, |
| REPLACE | lastsetstationid | BY | SMTLastSetStationId_IUT, |
| REPLACE | requestedinfo | BY | SMTConnectionPolicy_Test |


Copyright International Organization for Standardization
Provided by IHS under license with ISO
No reproduction or networking permitted without license from IHS
Not for Resale

| ASN.1 Type Constraint Declaration | | | |
|---|---|---|---|
| **Constraint Name** : PMFResponse_TN1 | | | |
| **Structured Type** : PMFResponse_Info | | | |
| **Derivation Path** : PMFResponse_Base | | | |
| **Comments** : PMF information field. | | | |
| **Constraint Value** | | | |
| REPLACE | reasoncode | BY | ReasonCode_03, |
| REPLACE | requestedinfo | BY | SMTT_Notify_Resp |

| ASN.1 Type Constraint Declaration | | | |
|---|---|---|---|
| **Constraint Name** : PMFResponse_TN2 | | | |
| **Structured Type** : PMFResponse_Info | | | |
| **Derivation Path** : PMFResponse_Base | | | |
| **Comments** : PMF information field. | | | |
| **Constraint Value** | | | |
| REPLACE | reasoncode | BY | ReasonCode_03, |
| REPLACE | setcount | BY | SMTSetCount_New, |
| REPLACE | lastsetstationid | BY | SMTLastSetStationId_IUT, |
| REPLACE | requestedinfo | BY | SMTT_Notify_Test |

| ASN.1 Type Constraint Declaration | | | |
|---|---|---|---|
| **Constraint Name** : PMFResponse_SRP1 | | | |
| **Structured Type** : PMFResponse_Info | | | |
| **Derivation Path** : PMFResponse_Base | | | |
| **Comments** : PMF information field. | | | |
| **Constraint Value** | | | |
| REPLACE | reasoncode | BY | ReasonCode_03, |
| REPLACE | requestedinfo | BY | SMTStatRptPolicy_Resp |

| ASN.1 Type Constraint Declaration | | | |
|---|---|---|---|
| **Constraint Name** : PMFResponse_SRP2 | | | |
| **Structured Type** : PMFResponse_Info | | | |
| **Derivation Path** : PMFResponse_Base | | | |
| **Comments** : PMF information field. | | | |
| **Constraint Value** | | | |
| REPLACE | reasoncode | BY | ReasonCode_03, |
| REPLACE | setcount | BY | SMTSetCount_New, |
| REPLACE | lastsetstationid | BY | SMTLastSetStationId_IUT, |
| REPLACE | requestedinfo | BY | SMTStatRptPolicy_Test |



Copyright International Organization for Standardization
Provided by IHS under license with ISO
No reproduction or networking permitted without license from IHS
Not for Resale

| ASN.1 Type Constraint Declaration | | | |
|---|---|---|---|
| **Constraint Name** : PMFResponse_TME1 | | | |
| **Structured Type** : PMFResponse_Info | | | |
| **Derivation Path** : PMFResponse_Base | | | |
| **Comments** : PMF information field. | | | |
| **Constraint Value** | | | |
| REPLACE | reasoncode | BY | ReasonCode_03, |
| REPLACE | requestedinfo | BY | SMTTrace_MaxExpiration_IUT |

| ASN.1 Type Constraint Declaration | | | |
|---|---|---|---|
| **Constraint Name** : PMFResponse_TME2 | | | |
| **Structured Type** : PMFResponse_Info | | | |
| **Derivation Path** : PMFResponse_Base | | | |
| **Comments** : PMF information field. | | | |
| **Constraint Value** | | | |
| REPLACE | reasoncode | BY | ReasonCode_03, |
| REPLACE | setcount | BY | SMTSetCount_New, |
| REPLACE | lastsetstationid | BY | SMTLastSetStationId_IUT, |
| REPLACE | requestedinfo | BY | SMTTrace_MaxExpiration_Test |

| ASN.1 Type Constraint Declaration | | | |
|---|---|---|---|
| **Constraint Name** : PMFResponse_Thru | | | |
| **Structured Type** : PMFResponse_Info | | | |
| **Derivation Path** : PMFResponse_Base | | | |
| **Comments** : PMF information field. | | | |
| **Constraint Value** | | | |
| REPLACE | reasoncode | BY | ReasonCode_03, |
| REPLACE | requestedinfo | BY | SMTCF_State_Thru |

| ASN.1 Type Constraint Declaration | | | |
|---|---|---|---|
| **Constraint Name** : PMFResponse_CWRPA | | | |
| **Structured Type** : PMFResponse_Info | | | |
| **Derivation Path** : PMFResponse_Base | | | |
| **Comments** : PMF information field. | | | |
| **Constraint Value** | | | |
| REPLACE | reasoncode | BY | ReasonCode_03, |
| REPLACE | requestedinfo | BY | SMTCF_State_Cwrpa |


Copyright International Organization for Standardization
Provided by IHS under license with ISO
No reproduction or networking permitted without license from IHS
Not for Resale

| ASN.1 Type Constraint Declaration | | | |
|---|---|---|---|
| **Constraint Name** : PMFResponse_CWRPB<br>**Structured Type** : PMFResponse_Info<br>**Derivation Path** : PMFResponse_Base<br>**Comments** : PMF information field. | | | |
| **Constraint Value** | | | |
| REPLACE | reasoncode | BY | ReasonCode_03, |
| REPLACE | requestedinfo | BY | SMTCF_State_Cwrpb |

| ASN.1 Type Constraint Declaration | | | |
|---|---|---|---|
| **Constraint Name** : PMFResponse_WRPS<br>**Structured Type** : PMFResponse_Info<br>**Derivation Path** : PMFResponse_Base<br>**Comments** : PMF information field. | | | |
| **Constraint Value** | | | |
| REPLACE | reasoncode | BY | ReasonCode_03, |
| REPLACE | requestedinfo | BY | SMTCF_State_Wrps |

| ASN.1 Type Constraint Declaration | | | |
|---|---|---|---|
| **Constraint Name** : PMFResponse_WRPAB<br>**Structured Type** : PMFResponse_Info<br>**Derivation Path** : PMFResponse_Base<br>**Comments** : PMF information field. | | | |
| **Constraint Value** | | | |
| REPLACE | reasoncode | BY | ReasonCode_03, |
| REPLACE | requestedinfo | BY | SMTCF_State_Wrpab |

| ASN.1 Type Constraint Declaration | | | |
|---|---|---|---|
| **Constraint Name** : PMFResponse_WRPA<br>**Structured Type** : PMFResponse_Info<br>**Derivation Path** : PMFResponse_Base<br>**Comments** : PMF information field. | | | |
| **Constraint Value** | | | |
| REPLACE | reasoncode | BY | ReasonCode_03, |
| REPLACE | requestedinfo | BY | SMTCF_State_Wrpa |

| ASN.1 Type Constraint Declaration | | | |
|---|---|---|---|
| **Constraint Name** : PMFResponse_WRPB<br>**Structured Type** : PMFResponse_Info<br>**Derivation Path** : PMFResponse_Base<br>**Comments** : PMF information field. | | | |
| **Constraint Value** | | | |
| REPLACE | reasoncode | BY | ReasonCode_03, |
| REPLACE | requestedinfo | BY | SMTCF_State_Wrpb |



Copyright International Organization for Standardization
Provided by IHS under license with ISO
No reproduction or networking permitted without license from IHS
Not for Resale

| ASN.1 Type Constraint Declaration | | | |
|---|---|---|---|
| **Constraint Name** : PMFResponse_HS1 | | | |
| **Structured Type** : PMFResponse_Info | | | |
| **Derivation Path** : PMFResponse_Base | | | |
| **Comments** : PMF information field. | | | |
| **Constraint Value** | | | |
| REPLACE | reasoncode | BY | ReasonCode_03, |
| REPLACE | requestedinfo | BY | SMTHoldState_Resp |

| ASN.1 Type Constraint Declaration | | | |
|---|---|---|---|
| **Constraint Name** : PMFResponse_HS2 | | | |
| **Structured Type** : PMFResponse_Info | | | |
| **Derivation Path** : PMFResponse_Base | | | |
| **Comments** : PMF information field. | | | |
| **Constraint Value** | | | |
| REPLACE | reasoncode | BY | ReasonCode_03, |
| REPLACE | requestedinfo | BY | SMTHoldState_HP |

| ASN.1 Type Constraint Declaration | | | |
|---|---|---|---|
| **Constraint Name** : PMFResponse_HS3 | | | |
| **Structured Type** : PMFResponse_Info | | | |
| **Derivation Path** : PMFResponse_Base | | | |
| **Comments** : PMF information field. | | | |
| **Constraint Value** | | | |
| REPLACE | reasoncode | BY | ReasonCode_03, |
| REPLACE | requestedinfo | BY | SMTHoldState_HS |

| ASN.1 Type Constraint Declaration | | | |
|---|---|---|---|
| **Constraint Name** : PMFResponse_SST | | | |
| **Structured Type** : PMFResponse_Info | | | |
| **Derivation Path** : PMFResponse_Base | | | |
| **Comments** : PMF information field. | | | |
| **Constraint Value** | | | |
| REPLACE | reasoncode | BY | ReasonCode_03, |
| REPLACE | requestedinfo | BY | SMTStationStatus_T |

| ASN.1 Type Constraint Declaration | | | |
|---|---|---|---|
| **Constraint Name** : PMFResponse_SSS | | | |
| **Structured Type** : PMFResponse_Info | | | |
| **Derivation Path** : PMFResponse_Base | | | |
| **Comments** : PMF information field. | | | |
| **Constraint Value** | | | |
| REPLACE | reasoncode | BY | ReasonCode_03, |
| REPLACE | requestedinfo | BY | SMTStationStatus_S |

--`,,```,,,,````-`-`,,`,,`,`,,`---



Copyright International Organization for Standardization
Provided by IHS under license with ISO
No reproduction or networking permitted without license from IHS
Not for Resale

| ASN.1 Type Constraint Declaration | | | |
|---|---|---|---|
| **Constraint Name** : PMFResponse_SSC<br>**Structured Type** : PMFResponse_Info<br>**Derivation Path** : PMFResponse_Base<br>**Comments** : PMF information field. | | | |
| **Constraint Value** | | | |
| REPLACE | reasoncode | BY | ReasonCode_03, |
| REPLACE | requestedinfo | BY | SMTStationStatus_C |

| ASN.1 Type Constraint Declaration | | | |
|---|---|---|---|
| **Constraint Name** : PMFResponse_PWFS<br>**Structured Type** : PMFResponse_Info<br>**Derivation Path** : PMFResponse_Base<br>**Comments** : PMF information field. | | | |
| **Constraint Value** | | | |
| REPLACE | reasoncode | BY | ReasonCode_03, |
| REPLACE | requestedinfo | BY | SMTPeerWrapFlag_S |

| ASN.1 Type Constraint Declaration | | | |
|---|---|---|---|
| **Constraint Name** : PMFResponse_PWFC<br>**Structured Type** : PMFResponse_Info<br>**Derivation Path** : PMFResponse_Base<br>**Comments** : PMF information field. | | | |
| **Constraint Value** | | | |
| REPLACE | reasoncode | BY | ReasonCode_03, |
| REPLACE | requestedinfo | BY | SMTPeerWrapFlag_C |

| ASN.1 Type Constraint Declaration | | | |
|---|---|---|---|
| **Constraint Name** : PMFResponse_MBF<br>**Structured Type** : PMFResponse_Info<br>**Derivation Path** : PMFResponse_Base<br>**Comments** : PMF information field. | | | |
| **Constraint Value** | | | |
| REPLACE | reasoncode | BY | ReasonCode_03, |
| REPLACE | requestedinfo | BY | MACBridgeFunctions_IUT |



Copyright International Organization for Standardization
Provided by IHS under license with ISO
No reproduction or networking permitted without license from IHS
Not for Resale

| ASN.1 Type Constraint Declaration | | | |
|---|---|---|---|
| **Constraint Name** : PMFResponse_TMC | | | |
| **Structured Type** : PMFResponse_Info | | | |
| **Derivation Path** : PMFResponse_Base | | | |
| **Comments** : PMF information field. | | | |
| **Constraint Value** | | | |
| REPLACE | reasoncode | BY | ReasonCode_03, |
| REPLACE | requestedinfo | BY | MACT_MaxCapability_IUT |

| ASN.1 Type Constraint Declaration | | | |
|---|---|---|---|
| **Constraint Name** : PMFResponse_TVXC | | | |
| **Structured Type** : PMFResponse_Info | | | |
| **Derivation Path** : PMFResponse_Base | | | |
| **Comments** : PMF information field. | | | |
| **Constraint Value** | | | |
| REPLACE | reasoncode | BY | ReasonCode_03, |
| REPLACE | requestedinfo | BY | MACTVXCapability_IUT |

| ASN.1 Type Constraint Declaration | | | |
|---|---|---|---|
| **Constraint Name** : PMFResponse_MAP | | | |
| **Structured Type** : PMFResponse_Info | | | |
| **Derivation Path** : PMFResponse_Base | | | |
| **Comments** : PMF information field. | | | |
| **Constraint Value** | | | |
| REPLACE | reasoncode | BY | ReasonCode_03, |
| REPLACE | requestedinfo | BY | MACAvailablePaths_IUT |

| ASN.1 Type Constraint Declaration | | | |
|---|---|---|---|
| **Constraint Name** : PMFResponse_MCP | | | |
| **Structured Type** : PMFResponse_Info | | | |
| **Derivation Path** : PMFResponse_Base | | | |
| **Comments** : PMF information field. | | | |
| **Constraint Value** | | | |
| REPLACE | reasoncode | BY | ReasonCode_03, |
| REPLACE | requestedinfo | BY | MACCurrentPath_IUT |

--`,,```,,,,````-`-`,,`,,`,`,,`---



Copyright International Organization for Standardization
Provided by IHS under license with ISO
No reproduction or networking permitted without license from IHS
Not for Resale

| ASN.1 Type Constraint Declaration | | | |
|---|---|---|---|
| **Constraint Name** : PMFResponse_UNA<br>**Structured Type** : PMFResponse_Info<br>**Derivation Path** : PMFResponse_Base<br>**Comments** : PMF information field. | | | |
| **Constraint Value** | | | |
| REPLACE | reasoncode | BY | ReasonCode_03, |
| REPLACE | requestedinfo | BY | MACUpstreamNbr_TSTR |

| ASN.1 Type Constraint Declaration | | | |
|---|---|---|---|
| **Constraint Name** : PMFResponse_UNK1<br>**Structured Type** : PMFResponse_Info<br>**Derivation Path** : PMFResponse_UNA<br>**Comments** : PMF information field. | | | |
| **Constraint Value** | | | |
| REPLACE | requestedinfo | BY | MACUpstreamNbr_UNK |

| ASN.1 Type Constraint Declaration | | | |
|---|---|---|---|
| **Constraint Name** : PMFResponse_DNA<br>**Structured Type** : PMFResponse_Info<br>**Derivation Path** : PMFResponse_Base<br>**Comments** : PMF information field. | | | |
| **Constraint Value** | | | |
| REPLACE | reasoncode | BY | ReasonCode_03, |
| REPLACE | requestedinfo | BY | MACDownstreamNbr_TSTR |

| ASN.1 Type Constraint Declaration | | | |
|---|---|---|---|
| **Constraint Name** : PMFResponse_UNK2<br>**Structured Type** : PMFResponse_Info<br>**Derivation Path** : PMFResponse_DNA<br>**Comments** : PMF information field. | | | |
| **Constraint Value** | | | |
| REPLACE | requestedinfo | BY | MACDownstreamNbr_UNK |

| ASN.1 Type Constraint Declaration | | | |
|---|---|---|---|
| **Constraint Name** : PMFResponse_OUNA<br>**Structured Type** : PMFResponse_Info<br>**Derivation Path** : PMFResponse_Base<br>**Comments** : PMF information field. | | | |
| **Constraint Value** | | | |
| REPLACE | reasoncode | BY | ReasonCode_03, |
| REPLACE | requestedinfo | BY | MACOldUpstreamNbr_IUT |



Copyright International Organization for Standardization
Provided by IHS under license with ISO
No reproduction or networking permitted without license from IHS
Not for Resale

| ASN.1 Type Constraint Declaration | | | |
|---|---|---|---|
| **Constraint Name** : PMFResponse_ODNA | | | |
| **Structured Type** : PMFResponse_Info | | | |
| **Derivation Path** : PMFResponse_Base | | | |
| **Comments** : PMF information field. | | | |
| **Constraint Value** | | | |
| REPLACE | reasoncode | BY | ReasonCode_03, |
| REPLACE | requestedinfo | BY | MACOldDownstreamNbr_IUT |

| ASN.1 Type Constraint Declaration | | | |
|---|---|---|---|
| **Constraint Name** : PMFResponse_MDAT1 | | | |
| **Structured Type** : PMFResponse_Info | | | |
| **Derivation Path** : PMFResponse_Base | | | |
| **Comments** : PMF information field. | | | |
| **Constraint Value** | | | |
| REPLACE | reasoncode | BY | ReasonCode_03, |
| REPLACE | requestedinfo | BY | MACDupAddressTest_IUT1 |

| ASN.1 Type Constraint Declaration | | | |
|---|---|---|---|
| **Constraint Name** : PMFResponse_MDAT2 | | | |
| **Structured Type** : PMFResponse_Info | | | |
| **Derivation Path** : PMFResponse_Base | | | |
| **Comments** : PMF information field. | | | |
| **Constraint Value** | | | |
| REPLACE | reasoncode | BY | ReasonCode_03, |
| REPLACE | requestedinfo | BY | MACDupAddressTest_IUT2 |

| ASN.1 Type Constraint Declaration | | | |
|---|---|---|---|
| **Constraint Name** : PMFResponse_MRP1 | | | |
| **Structured Type** : PMFResponse_Info | | | |
| **Derivation Path** : PMFResponse_Base | | | |
| **Comments** : PMF information field. | | | |
| **Constraint Value** | | | |
| REPLACE | reasoncode | BY | ReasonCode_03, |
| REPLACE | requestedinfo | BY | MACRequestedPaths_IUT1 |

| ASN.1 Type Constraint Declaration | | | |
|---|---|---|---|
| **Constraint Name** : PMFResponse_MRP2 | | | |
| **Structured Type** : PMFResponse_Info | | | |
| **Derivation Path** : PMFResponse_Base | | | |
| **Comments** : PMF information field. | | | |
| **Constraint Value** | | | |
| REPLACE | reasoncode | BY | ReasonCode_03, |
| REPLACE | setcount | BY | SMTSetCount_New, |
| REPLACE | lastsetstationid | BY | SMTLastSetStationId_IUT, |
| REPLACE | requestedinfo | BY | MACRequestedPaths_IUT2 |


Copyright International Organization for Standardization
Provided by IHS under license with ISO
No reproduction or networking permitted without license from IHS
Not for Resale

| ASN.1 Type Constraint Declaration | | | |
|---|---|---|---|
| **Constraint Name** : PMFResponse_MDPT | | | |
| **Structured Type** : PMFResponse_Info | | | |
| **Derivation Path** : PMFResponse_Base | | | |
| **Comments** : PMF information field. | | | |
| **Constraint Value** | | | |
| REPLACE | reasoncode | BY | ReasonCode_03, |
| REPLACE | requestedinfo | BY | MACDownstreamPORTType_IUT |

| ASN.1 Type Constraint Declaration | | | |
|---|---|---|---|
| **Constraint Name** : PMFResponse_MI0 | | | |
| **Structured Type** : PMFResponse_Info | | | |
| **Derivation Path** : PMFResponse_Base | | | |
| **Comments** : PMF information field. | | | |
| **Constraint Value** | | | |
| REPLACE | reasoncode | BY | ReasonCode_03, |
| REPLACE | requestedinfo | BY | MACIndex_0 |

| ASN.1 Type Constraint Declaration | | | |
|---|---|---|---|
| **Constraint Name** : PMFResponse_MI1 | | | |
| **Structured Type** : PMFResponse_Info | | | |
| **Derivation Path** : PMFResponse_Base | | | |
| **Comments** : PMF information field. | | | |
| **Constraint Value** | | | |
| REPLACE | reasoncode | BY | ReasonCode_03, |
| REPLACE | requestedinfo | BY | MACIndex_1 |

| ASN.1 Type Constraint Declaration | | | |
|---|---|---|---|
| **Constraint Name** : PMFResponse_MSA | | | |
| **Structured Type** : PMFResponse_Info | | | |
| **Derivation Path** : PMFResponse_Base | | | |
| **Comments** : PMF information field. | | | |
| **Constraint Value** | | | |
| REPLACE | reasoncode | BY | ReasonCode_03, |
| REPLACE | requestedinfo | BY | MACSMTAddress_IUT |

| ASN.1 Type Constraint Declaration | | | |
|---|---|---|---|
| **Constraint Name** : PMFResponse_MLGA | | | |
| **Structured Type** : PMFResponse_Info | | | |
| **Derivation Path** : PMFResponse_Base | | | |
| **Comments** : PMF information field. | | | |
| **Constraint Value** | | | |
| REPLACE | reasoncode | BY | ReasonCode_03, |
| REPLACE | requestedinfo | BY | MACLongGrpAddress_IUT |



Copyright International Organization for Standardization
Provided by IHS under license with ISO
No reproduction or networking permitted without license from IHS
Not for Resale

| ASN.1 Type Constraint Declaration | | | |
|---|---|---|---|
| **Constraint Name** : PMFResponse_MSGA<br>**Structured Type** : PMFResponse_Info<br>**Derivation Path** : PMFResponse_Base<br>**Comments** : PMF information field. | | | |
| **Constraint Value** | | | |
| REPLACE | reasoncode | BY | ReasonCode_03, |
| REPLACE | requestedinfo | BY | MACShortGrpAddress_IUT |

| ASN.1 Type Constraint Declaration | | | |
|---|---|---|---|
| **Constraint Name** : PMFResponse_MT_Req<br>**Structured Type** : PMFResponse_Info<br>**Derivation Path** : PMFResponse_Base<br>**Comments** : PMF information field. | | | |
| **Constraint Value** | | | |
| REPLACE | reasoncode | BY | ReasonCode_03, |
| REPLACE | requestedinfo | BY | MACT_Req_IUT |

| ASN.1 Type Constraint Declaration | | | |
|---|---|---|---|
| **Constraint Name** : PMFResponse_MT_Neg<br>**Structured Type** : PMFResponse_Info<br>**Derivation Path** : PMFResponse_Base<br>**Comments** : PMF information field. | | | |
| **Constraint Value** | | | |
| REPLACE | reasoncode | BY | ReasonCode_03, |
| REPLACE | requestedinfo | BY | MACT_Neg_IUT |

| ASN.1 Type Constraint Declaration | | | |
|---|---|---|---|
| **Constraint Name** : PMFResponse_MT_Max<br>**Structured Type** : PMFResponse_Info<br>**Derivation Path** : PMFResponse_Base<br>**Comments** : PMF information field. | | | |
| **Constraint Value** | | | |
| REPLACE | reasoncode | BY | ReasonCode_03, |
| REPLACE | requestedinfo | BY | MACT_Max_IUT |


--`,,```,,,,````-`-`,,`,,`,`,,`---
Copyright International Organization for Standardization
Provided by IHS under license with ISO
No reproduction or networking permitted without license from IHS
Not for Resale

| ASN.1 Type Constraint Declaration | | | |
|---|---|---|---|
| **Constraint Name** : PMFResponse_MTvx<br>**Structured Type** : PMFResponse_Info<br>**Derivation Path** : PMFResponse_Base<br>**Comments** : PMF information field. | | | |
| **Constraint Value** | | | |
| REPLACE | reasoncode | BY | ReasonCode_03, |
| REPLACE | requestedinfo | BY | MACTvxValue_IUT |

| ASN.1 Type Constraint Declaration | | | |
|---|---|---|---|
| **Constraint Name** : PMFResponse_MT_Pri0<br>**Structured Type** : PMFResponse_Info<br>**Derivation Path** : PMFResponse_Base<br>**Comments** : PMF information field. | | | |
| **Constraint Value** | | | |
| REPLACE | reasoncode | BY | ReasonCode_03, |
| REPLACE | requestedinfo | BY | MACT_Pri0_IUT |

| ASN.1 Type Constraint Declaration | | | |
|---|---|---|---|
| **Constraint Name** : PMFResponse_MT_Pri1<br>**Structured Type** : PMFResponse_Info<br>**Derivation Path** : PMFResponse_Base<br>**Comments** : PMF information field. | | | |
| **Constraint Value** | | | |
| REPLACE | reasoncode | BY | ReasonCode_03, |
| REPLACE | requestedinfo | BY | MACT_Pri1_IUT |

| ASN.1 Type Constraint Declaration | | | |
|---|---|---|---|
| **Constraint Name** : PMFResponse_MT_Pri2<br>**Structured Type** : PMFResponse_Info<br>**Derivation Path** : PMFResponse_Base<br>**Comments** : PMF information field. | | | |
| **Constraint Value** | | | |
| REPLACE | reasoncode | BY | ReasonCode_03, |
| REPLACE | requestedinfo | BY | MACT_Pri2_IUT |

| ASN.1 Type Constraint Declaration | | | |
|---|---|---|---|
| **Constraint Name** : PMFResponse_MT_Pri3<br>**Structured Type** : PMFResponse_Info<br>**Derivation Path** : PMFResponse_Base<br>**Comments** : PMF information field. | | | |
| **Constraint Value** | | | |
| REPLACE | reasoncode | BY | ReasonCode_03, |
| REPLACE | requestedinfo | BY | MACT_Pri3_IUT |



Copyright International Organization for Standardization
Provided by IHS under license with ISO
No reproduction or networking permitted without license from IHS
Not for Resale

| ASN.1 Type Constraint Declaration | | | |
|---|---|---|---|
| **Constraint Name** : PMFResponse_MT_Pri4 | | | |
| **Structured Type** : PMFResponse_Info | | | |
| **Derivation Path** : PMFResponse_Base | | | |
| **Comments** : PMF information field. | | | |
| **Constraint Value** | | | |
| REPLACE | reasoncode | BY | ReasonCode_03, |
| REPLACE | requestedinfo | BY | MACT_Pri4_IUT |

| ASN.1 Type Constraint Declaration | | | |
|---|---|---|---|
| **Constraint Name** : PMFResponse_MT_Pri5 | | | |
| **Structured Type** : PMFResponse_Info | | | |
| **Derivation Path** : PMFResponse_Base | | | |
| **Comments** : PMF information field. | | | |
| **Constraint Value** | | | |
| REPLACE | reasoncode | BY | ReasonCode_03, |
| REPLACE | requestedinfo | BY | MACT_Pri5_IUT |

| ASN.1 Type Constraint Declaration | | | |
|---|---|---|---|
| **Constraint Name** : PMFResponse_MT_Pri6 | | | |
| **Structured Type** : PMFResponse_Info | | | |
| **Derivation Path** : PMFResponse_Base | | | |
| **Comments** : PMF information field. | | | |
| **Constraint Value** | | | |
| REPLACE | reasoncode | BY | ReasonCode_03, |
| REPLACE | requestedinfo | BY | MACT_Pri6_IUT |

| ASN.1 Type Constraint Declaration | | | |
|---|---|---|---|
| **Constraint Name** : PMFResponse_MFC1 | | | |
| **Structured Type** : PMFResponse_Info | | | |
| **Derivation Path** : PMFResponse_Base | | | |
| **Comments** : PMF information field. | | | |
| **Constraint Value** | | | |
| REPLACE | reasoncode | BY | ReasonCode_03, |
| REPLACE | requestedinfo | BY | MACFrame_Ct_IUT1 |

| ASN.1 Type Constraint Declaration | | | |
|---|---|---|---|
| **Constraint Name** : PMFResponse_MFC2 | | | |
| **Structured Type** : PMFResponse_Info | | | |
| **Derivation Path** : PMFResponse_Base | | | |
| **Comments** : PMF information field. | | | |
| **Constraint Value** | | | |
| REPLACE | reasoncode | BY | ReasonCode_03, |
| REPLACE | requestedinfo | BY | MACFrame_Ct_IUT2 |

--`,,```,,,,````-`-`,,`,,`,`,,`---



Copyright International Organization for Standardization
Provided by IHS under license with ISO
No reproduction or networking permitted without license from IHS
Not for Resale

| ASN.1 Type Constraint Declaration | | | |
|---|---|---|---|
| **Constraint Name** : PMFResponse_MCC1 | | | |
| **Structured Type** : PMFResponse_Info | | | |
| **Derivation Path** : PMFResponse_Base | | | |
| **Comments** : PMF information field. | | | |
| **Constraint Value** | | | |
| REPLACE | reasoncode | BY | ReasonCode_03, |
| REPLACE | requestedinfo | BY | MACCopied_Ct_IUT1 |

| ASN.1 Type Constraint Declaration | | | |
|---|---|---|---|
| **Constraint Name** : PMFResponse_MCC2 | | | |
| **Structured Type** : PMFResponse_Info | | | |
| **Derivation Path** : PMFResponse_Base | | | |
| **Comments** : PMF information field. | | | |
| **Constraint Value** | | | |
| REPLACE | reasoncode | BY | ReasonCode_03, |
| REPLACE | requestedinfo | BY | MACCopied_Ct_IUT2 |

| ASN.1 Type Constraint Declaration | | | |
|---|---|---|---|
| **Constraint Name** : PMFResponse_MTC1 | | | |
| **Structured Type** : PMFResponse_Info | | | |
| **Derivation Path** : PMFResponse_Base | | | |
| **Comments** : PMF information field. | | | |
| **Constraint Value** | | | |
| REPLACE | reasoncode | BY | ReasonCode_03, |
| REPLACE | requestedinfo | BY | MACTransmit_Ct_IUT1 |

| ASN.1 Type Constraint Declaration | | | |
|---|---|---|---|
| **Constraint Name** : PMFResponse_MTC2 | | | |
| **Structured Type** : PMFResponse_Info | | | |
| **Derivation Path** : PMFResponse_Base | | | |
| **Comments** : PMF information field. | | | |
| **Constraint Value** | | | |
| REPLACE | reasoncode | BY | ReasonCode_03, |
| REPLACE | requestedinfo | BY | MACTransmit_Ct_IUT2 |

--`,,```,,,,````-`-`,,`,,`,`,,`---



Copyright International Organization for Standardization
Provided by IHS under license with ISO
No reproduction or networking permitted without license from IHS
Not for Resale

| ASN.1 Type Constraint Declaration | | | |
|---|---|---|---|
| **Constraint Name** : PMFResponse_MTKC1 | | | |
| **Structured Type** : PMFResponse_Info | | | |
| **Derivation Path** : PMFResponse_Base | | | |
| **Comments** : PMF information field. | | | |
| **Constraint Value** | | | |
| REPLACE | reasoncode | BY | ReasonCode_03, |
| REPLACE | requestedinfo | BY | MACToken_Ct_IUT1 |

| ASN.1 Type Constraint Declaration | | | |
|---|---|---|---|
| **Constraint Name** : PMFResponse_MTKC2 | | | |
| **Structured Type** : PMFResponse_Info | | | |
| **Derivation Path** : PMFResponse_Base | | | |
| **Comments** : PMF information field. | | | |
| **Constraint Value** | | | |
| REPLACE | reasoncode | BY | ReasonCode_03, |
| REPLACE | requestedinfo | BY | MACToken_Ct_IUT2 |

| ASN.1 Type Constraint Declaration | | | |
|---|---|---|---|
| **Constraint Name** : PMFResponse_MEC1 | | | |
| **Structured Type** : PMFResponse_Info | | | |
| **Derivation Path** : PMFResponse_Base | | | |
| **Comments** : PMF information field. | | | |
| **Constraint Value** | | | |
| REPLACE | reasoncode | BY | ReasonCode_03, |
| REPLACE | requestedinfo | BY | MACError_Ct_IUT1 |

| ASN.1 Type Constraint Declaration | | | |
|---|---|---|---|
| **Constraint Name** : PMFResponse_MEC2 | | | |
| **Structured Type** : PMFResponse_Info | | | |
| **Derivation Path** : PMFResponse_Base | | | |
| **Comments** : PMF information field. | | | |
| **Constraint Value** | | | |
| REPLACE | reasoncode | BY | ReasonCode_03, |
| REPLACE | requestedinfo | BY | MACError_Ct_IUT2 |

| ASN.1 Type Constraint Declaration | | | |
|---|---|---|---|
| **Constraint Name** : PMFResponse_MLC1 | | | |
| **Structured Type** : PMFResponse_Info | | | |
| **Derivation Path** : PMFResponse_Base | | | |
| **Comments** : PMF information field. | | | |
| **Constraint Value** | | | |
| REPLACE | reasoncode | BY | ReasonCode_03, |
| REPLACE | requestedinfo | BY | MACLost_Ct_IUT1 |


Copyright International Organization for Standardization
Provided by IHS under license with ISO
No reproduction or networking permitted without license from IHS
Not for Resale

| ASN.1 Type Constraint Declaration | | | |
|---|---|---|---|
| **Constraint Name** : PMFResponse_MLC2 | | | |
| **Structured Type** : PMFResponse_Info | | | |
| **Derivation Path** : PMFResponse_Base | | | |
| **Comments** : PMF information field. | | | |
| **Constraint Value** | | | |
| REPLACE | reasoncode | BY | ReasonCode_03, |
| REPLACE | requestedinfo | BY | MACLost_Ct_IUT2 |

| ASN.1 Type Constraint Declaration | | | |
|---|---|---|---|
| **Constraint Name** : PMFResponse_MTEC1 | | | |
| **Structured Type** : PMFResponse_Info | | | |
| **Derivation Path** : PMFResponse_Base | | | |
| **Comments** : PMF information field. | | | |
| **Constraint Value** | | | |
| REPLACE | reasoncode | BY | ReasonCode_03, |
| REPLACE | requestedinfo | BY | MACTvxExpired_Ct_IUT1 |

| ASN.1 Type Constraint Declaration | | | |
|---|---|---|---|
| **Constraint Name** : PMFResponse_MTEC2 | | | |
| **Structured Type** : PMFResponse_Info | | | |
| **Derivation Path** : PMFResponse_Base | | | |
| **Comments** : PMF information field. | | | |
| **Constraint Value** | | | |
| REPLACE | reasoncode | BY | ReasonCode_03, |
| REPLACE | requestedinfo | BY | MACTvxExpired_Ct_IUT2 |

| ASN.1 Type Constraint Declaration | | | |
|---|---|---|---|
| **Constraint Name** : PMFResponse_MLC1 | | | |
| **Structured Type** : PMFResponse_Info | | | |
| **Derivation Path** : PMFResponse_Base | | | |
| **Comments** : PMF information field. | | | |
| **Constraint Value** | | | |
| REPLACE | reasoncode | BY | ReasonCode_03, |
| REPLACE | requestedinfo | BY | MACLate_Ct_IUT1 |



Copyright International Organization for Standardization
Provided by IHS under license with ISO
No reproduction or networking permitted without license from IHS
Not for Resale

| ASN.1 Type Constraint Declaration | | | |
|---|---|---|---|
| **Constraint Name** : PMFResponse_MLC2 | | | |
| **Structured Type** : PMFResponse_Info | | | |
| **Derivation Path** : PMFResponse_Base | | | |
| **Comments** : PMF information field. | | | |
| **Constraint Value** | | | |
| REPLACE | reasoncode | BY | ReasonCode_03, |
| REPLACE | requestedinfo | BY | MACLate_Ct_IUT2 |

| ASN.1 Type Constraint Declaration | | | |
|---|---|---|---|
| **Constraint Name** : PMFResponse_MRS | | | |
| **Structured Type** : PMFResponse_Info | | | |
| **Derivation Path** : PMFResponse_Base | | | |
| **Comments** : PMF information field. | | | |
| **Constraint Value** | | | |
| REPLACE | reasoncode | BY | ReasonCode_03, |
| REPLACE | requestedinfo | BY | MACRMTState_IUT |

| ASN.1 Type Constraint Declaration | | | |
|---|---|---|---|
| **Constraint Name** : PMFResponse_MDAF | | | |
| **Structured Type** : PMFResponse_Info | | | |
| **Derivation Path** : PMFResponse_Base | | | |
| **Comments** : PMF information field. | | | |
| **Constraint Value** | | | |
| REPLACE | reasoncode | BY | ReasonCode_03, |
| REPLACE | requestedinfo | BY | MACDA_Flag_IUT |

| ASN.1 Type Constraint Declaration | | | |
|---|---|---|---|
| **Constraint Name** : PMFResponse_MUNDAF1 | | | |
| **Structured Type** : PMFResponse_Info | | | |
| **Derivation Path** : PMFResponse_Base | | | |
| **Comments** : PMF information field. | | | |
| **Constraint Value** | | | |
| REPLACE | reasoncode | BY | ReasonCode_03, |
| REPLACE | requestedinfo | BY | MACUNDA_Flag_IUT1 |


Copyright International Organization for Standardization
Provided by IHS under license with ISO
No reproduction or networking permitted without license from IHS
Not for Resale

| ASN.1 Type Constraint Declaration | | | |
|---|---|---|---|
| **Constraint Name** : PMFResponse_MUNDAF2 | | | |
| **Structured Type** : PMFResponse_Info | | | |
| **Derivation Path** : PMFResponse_Base | | | |
| **Comments** : PMF information field. | | | |
| **Constraint Value** | | | |
| REPLACE | reasoncode | BY | ReasonCode_03, |
| REPLACE | requestedinfo | BY | MACUNDA_Flag_IUT2 |

| ASN.1 Type Constraint Declaration | | | |
|---|---|---|---|
| **Constraint Name** : PMFResponse_MFEF | | | |
| **Structured Type** : PMFResponse_Info | | | |
| **Derivation Path** : PMFResponse_Base | | | |
| **Comments** : PMF information field. | | | |
| **Constraint Value** | | | |
| REPLACE | reasoncode | BY | ReasonCode_03, |
| REPLACE | requestedinfo | BY | MACFrameErrorFlag_Resp |

| ASN.1 Type Constraint Declaration | | | |
|---|---|---|---|
| **Constraint Name** : PMFResponse_MAUA | | | |
| **Structured Type** : PMFResponse_Info | | | |
| **Derivation Path** : PMFResponse_Base | | | |
| **Comments** : PMF information field. | | | |
| **Constraint Value** | | | |
| REPLACE | reasoncode | BY | ReasonCode_03, |
| REPLACE | requestedinfo | BY | MACMA_UnitdataAvailable_IUT |

| ASN.1 Type Constraint Declaration | | | |
|---|---|---|---|
| **Constraint Name** : PMFResponse_MHP | | | |
| **Structured Type** : PMFResponse_Info | | | |
| **Derivation Path** : PMFResponse_Base | | | |
| **Comments** : PMF information field. | | | |
| **Constraint Value** | | | |
| REPLACE | reasoncode | BY | ReasonCode_03, |
| REPLACE | requestedinfo | BY | MACHardwarePresent_IUT |

| ASN.1 Type Constraint Declaration | | | |
|---|---|---|---|
| **Constraint Name** : PMFResponse_MAUE | | | |
| **Structured Type** : PMFResponse_Info | | | |
| **Derivation Path** : PMFResponse_Base | | | |
| **Comments** : PMF information field. | | | |
| **Constraint Value** | | | |
| REPLACE | reasoncode | BY | ReasonCode_03, |
| REPLACE | requestedinfo | BY | MACMA_UnitdataEnable_Resp |



Copyright International Organization for Standardization
Provided by IHS under license with ISO
No reproduction or networking permitted without license from IHS
Not for Resale

| ASN.1 Type Constraint Declaration | | | |
|---|---|---|---|
| **Constraint Name** : PMFResponse_PI | | | |
| **Structured Type** : PMFResponse_Info | | | |
| **Derivation Path** : PMFResponse_Base | | | |
| **Comments** : PMF information field. | | | |
| **Constraint Value** | | | |
| REPLACE | reasoncode | BY | ReasonCode_03, |
| REPLACE | requestedinfo | BY | PATHIndex_IUT |

| ASN.1 Type Constraint Declaration | | | |
|---|---|---|---|
| **Constraint Name** : PMFResponse_PRL | | | |
| **Structured Type** : PMFResponse_Info | | | |
| **Derivation Path** : PMFResponse_Base | | | |
| **Comments** : PMF information field. | | | |
| **Constraint Value** | | | |
| REPLACE | reasoncode | BY | ReasonCode_03, |
| REPLACE | requestedinfo | BY | PATHRingLatency_IUT |

| ASN.1 Type Constraint Declaration | | | |
|---|---|---|---|
| **Constraint Name** : PMFResponse_PTR1 | | | |
| **Structured Type** : PMFResponse_Info | | | |
| **Derivation Path** : PMFResponse_Base | | | |
| **Comments** : PMF information field. | | | |
| **Constraint Value** | | | |
| REPLACE | reasoncode | BY | ReasonCode_03, |
| REPLACE | requestedinfo | BY | PATHT_Rmode_IUT1 |

| ASN.1 Type Constraint Declaration | | | |
|---|---|---|---|
| **Constraint Name** : PMFResponse_PTR2 | | | |
| **Structured Type** : PMFResponse_Info | | | |
| **Derivation Path** : PMFResponse_Base | | | |
| **Comments** : PMF information field. | | | |
| **Constraint Value** | | | |
| REPLACE | reasoncode | BY | ReasonCode_03, |
| REPLACE | setcount | BY | SMTSetCount_New, |
| REPLACE | lastsetstationid | BY | SMTLastSetStationId_IUT, |
| REPLACE | requestedinfo | BY | PATHT_Rmode_IUT2 |

| ASN.1 Type Constraint Declaration | | | |
|---|---|---|---|
| **Constraint Name** : PMFResponse_PTR3 | | | |
| **Structured Type** : PMFResponse_Info | | | |
| **Derivation Path** : PMFResponse_Base | | | |
| **Comments** : PMF information field. | | | |
| **Constraint Value** | | | |
| REPLACE | reasoncode | BY | ReasonCode_03, |
| REPLACE | requestedinfo | BY | PATHT_Rmode_IUT2 |


Copyright International Organization for Standardization
Provided by IHS under license with ISO
No reproduction or networking permitted without license from IHS
Not for Resale

| ASN.1 Type Constraint Declaration | | | |
|---|---|---|---|
| **Constraint Name** : PMFResponse_PTLB<br>**Structured Type** : PMFResponse_Info<br>**Derivation Path** : PMFResponse_Base<br>**Comments** : PMF information field. | | | |
| **Constraint Value** | | | |
| REPLACE | reasoncode | BY | ReasonCode_03, |
| REPLACE | requestedinfo | BY | PATHTVXLowerBound_IUT |

| ASN.1 Type Constraint Declaration | | | |
|---|---|---|---|
| **Constraint Name** : PMFResponse_PTMLB<br>**Structured Type** : PMFResponse_Info<br>**Derivation Path** : PMFResponse_Base<br>**Comments** : PMF information field. | | | |
| **Constraint Value** | | | |
| REPLACE | reasoncode | BY | ReasonCode_03, |
| REPLACE | requestedinfo | BY | PATHT_MaxLowerBound_IUT |

| ASN.1 Type Constraint Declaration | | | |
|---|---|---|---|
| **Constraint Name** : PMFResponse_PMTR<br>**Structured Type** : PMFResponse_Info<br>**Derivation Path** : PMFResponse_Base<br>**Comments** : PMF information field. | | | |
| **Constraint Value** | | | |
| REPLACE | reasoncode | BY | ReasonCode_03, |
| REPLACE | requestedinfo | BY | PATHMaxT_Req_IUT |

| ASN.1 Type Constraint Declaration | | | |
|---|---|---|---|
| **Constraint Name** : PMFResponse_PMT<br>**Structured Type** : PMFResponse_Info<br>**Derivation Path** : PMFResponse_Base<br>**Comments** : PMF information field. | | | |
| **Constraint Value** | | | |
| REPLACE | reasoncode | BY | ReasonCode_03, |
| REPLACE | requestedinfo | BY | PORTMyType_IUT |

| ASN.1 Type Constraint Declaration | | | |
|---|---|---|---|
| **Constraint Name** : PMFResponse_PNT<br>**Structured Type** : PMFResponse_Info<br>**Derivation Path** : PMFResponse_Base<br>**Comments** : PMF information field. | | | |
| **Constraint Value** | | | |
| REPLACE | reasoncode | BY | ReasonCode_03, |
| REPLACE | requestedinfo | BY | PORTNeighborType_IUT |



Copyright International Organization for Standardization
Provided by IHS under license with ISO
No reproduction or networking permitted without license from IHS
Not for Resale

| ASN.1 Type Constraint Declaration | | | |
|---|---|---|---|
| **Constraint Name** : PMFResponse_PCP | | | |
| **Structured Type** : PMFResponse_Info | | | |
| **Derivation Path** : PMFResponse_Base | | | |
| **Comments** : PMF information field. | | | |
| **Constraint Value** | | | |
| REPLACE | reasoncode | BY | ReasonCode_03, |
| REPLACE | requestedinfo | BY | PORTCurrentPath_IUT |

| ASN.1 Type Constraint Declaration | | | |
|---|---|---|---|
| **Constraint Name** : PMFResponse_PRPA | | | |
| **Structured Type** : PMFResponse_Info | | | |
| **Derivation Path** : PMFResponse_Base | | | |
| **Comments** : PMF information field. | | | |
| **Constraint Value** | | | |
| REPLACE | reasoncode | BY | ReasonCode_03, |
| REPLACE | requestedinfo | BY | PORTRequestedPaths_A |

| ASN.1 Type Constraint Declaration | | | |
|---|---|---|---|
| **Constraint Name** : PMFResponse_PRPB1 | | | |
| **Structured Type** : PMFResponse_Info | | | |
| **Derivation Path** : PMFResponse_Base | | | |
| **Comments** : PMF information field. | | | |
| **Constraint Value** | | | |
| REPLACE | reasoncode | BY | ReasonCode_03, |
| REPLACE | requestedinfo | BY | PORTRequestedPaths_B1 |

| ASN.1 Type Constraint Declaration | | | |
|---|---|---|---|
| **Constraint Name** : PMFResponse_PRPB2 | | | |
| **Structured Type** : PMFResponse_Info | | | |
| **Derivation Path** : PMFResponse_Base | | | |
| **Comments** : PMF information field. | | | |
| **Constraint Value** | | | |
| REPLACE | reasoncode | BY | ReasonCode_03, |
| REPLACE | requestedinfo | BY | PORTRequestedPaths_B2 |

| ASN.1 Type Constraint Declaration | | | |
|---|---|---|---|
| **Constraint Name** : PMFResponse_PRPS | | | |
| **Structured Type** : PMFResponse_Info | | | |
| **Derivation Path** : PMFResponse_Base | | | |
| **Comments** : PMF information field. | | | |
| **Constraint Value** | | | |
| REPLACE | reasoncode | BY | ReasonCode_03, |
| REPLACE | requestedinfo | BY | PORTRequestedPaths_S |


--`,,```,,,,````-`-`,,`,,`,`,,`---
Copyright International Organization for Standardization
Provided by IHS under license with ISO
No reproduction or networking permitted without license from IHS
Not for Resale

| ASN.1 Type Constraint Declaration | | | |
|---|---|---|---|
| **Constraint Name** : PMFResponse_PRPM<br>**Structured Type** : PMFResponse_Info<br>**Derivation Path** : PMFResponse_Base<br>**Comments** : PMF information field. | | | |
| **Constraint Value** | | | |
| REPLACE | reasoncode | BY | ReasonCode_03, |
| REPLACE | requestedinfo | BY | PORTRequestedPaths_M |

| ASN.1 Type Constraint Declaration | | | |
|---|---|---|---|
| **Constraint Name** : PMFResponse_PMP<br>**Structured Type** : PMFResponse_Info<br>**Derivation Path** : PMFResponse_Base<br>**Comments** : PMF information field. | | | |
| **Constraint Value** | | | |
| REPLACE | reasoncode | BY | ReasonCode_03, |
| REPLACE | requestedinfo | BY | PORTMACPlacement_IUT |

| ASN.1 Type Constraint Declaration | | | |
|---|---|---|---|
| **Constraint Name** : PMFResponse_PAP<br>**Structured Type** : PMFResponse_Info<br>**Derivation Path** : PMFResponse_Base<br>**Comments** : PMF information field. | | | |
| **Constraint Value** | | | |
| REPLACE | reasoncode | BY | ReasonCode_03, |
| REPLACE | requestedinfo | BY | PORTAvailablePaths_IUT |

| ASN.1 Type Constraint Declaration | | | |
|---|---|---|---|
| **Constraint Name** : PMFResponse_PMLT1<br>**Structured Type** : PMFResponse_Info<br>**Derivation Path** : PMFResponse_Base<br>**Comments** : PMF information field. | | | |
| **Constraint Value** | | | |
| REPLACE | reasoncode | BY | ReasonCode_03, |
| REPLACE | requestedinfo | BY | PORTMACLoop_Time_IUT1 |



Copyright International Organization for Standardization
Provided by IHS under license with ISO
No reproduction or networking permitted without license from IHS
Not for Resale

| ASN.1 Type Constraint Declaration | | | |
|---|---|---|---|
| **Constraint Name** : PMFResponse_PMLT2 | | | |
| **Structured Type** : PMFResponse_Info | | | |
| **Derivation Path** : PMFResponse_Base | | | |
| **Comments** : PMF information field. | | | |
| **Constraint Value** | | | |
| REPLACE | reasoncode | BY | ReasonCode_03, |
| REPLACE | setcount | BY | SMTSetCount_New, |
| REPLACE | lastsetstationid | BY | SMTLastSetStationId_IUT, |
| REPLACE | requestedinfo | BY | PORTMACLoop_Time_IUT2 |

| ASN.1 Type Constraint Declaration | | | |
|---|---|---|---|
| **Constraint Name** : PMFResponse_PMLT3 | | | |
| **Structured Type** : PMFResponse_Info | | | |
| **Derivation Path** : PMFResponse_Base | | | |
| **Comments** : PMF information field. | | | |
| **Constraint Value** | | | |
| REPLACE | reasoncode | BY | ReasonCode_03, |
| REPLACE | requestedinfo | BY | PORTMACLoop_Time_IUT2 |

| ASN.1 Type Constraint Declaration | | | |
|---|---|---|---|
| **Constraint Name** : PMFResponse_PPC | | | |
| **Structured Type** : PMFResponse_Info | | | |
| **Derivation Path** : PMFResponse_Base | | | |
| **Comments** : PMF information field. | | | |
| **Constraint Value** | | | |
| REPLACE | reasoncode | BY | ReasonCode_03, |
| REPLACE | requestedinfo | BY | PORTPMDClass_IUT |

| ASN.1 Type Constraint Declaration | | | |
|---|---|---|---|
| **Constraint Name** : PMFResponse_PRTI | | | |
| **Structured Type** : PMFResponse_Info | | | |
| **Derivation Path** : PMFResponse_Base | | | |
| **Comments** : PMF information field. | | | |
| **Constraint Value** | | | |
| REPLACE | reasoncode | BY | ReasonCode_03, |
| REPLACE | requestedinfo | BY | PORTIndex_IUT |


Copyright International Organization for Standardization
Provided by IHS under license with ISO
No reproduction or networking permitted without license from IHS
Not for Resale

| ASN.1 Type Constraint Declaration | | | |
|---|---|---|---|
| **Constraint Name** : PMFResponse_PPL<br>**Structured Type** : PMFResponse_Info<br>**Derivation Path** : PMFResponse_Base<br>**Comments** : PMF information field. | | | |
| **Constraint Value** | | | |
| REPLACE | reasoncode | BY | ReasonCode_03, |
| REPLACE | requestedinfo | BY | PORTPC_LS_IUT |

| ASN.1 Type Constraint Declaration | | | |
|---|---|---|---|
| **Constraint Name** : PMFResponse_PLC<br>**Structured Type** : PMFResponse_Info<br>**Derivation Path** : PMFResponse_Base<br>**Comments** : PMF information field. | | | |
| **Constraint Value** | | | |
| REPLACE | reasoncode | BY | ReasonCode_03, |
| REPLACE | requestedinfo | BY | PORTLer_Cutoff_IUT |

| ASN.1 Type Constraint Declaration | | | |
|---|---|---|---|
| **Constraint Name** : PMFResponse_PLA<br>**Structured Type** : PMFResponse_Info<br>**Derivation Path** : PMFResponse_Base<br>**Comments** : PMF information field. | | | |
| **Constraint Value** | | | |
| REPLACE | reasoncode | BY | ReasonCode_03, |
| REPLACE | requestedinfo | BY | PORTLer_Alarm_IUT |

| ASN.1 Type Constraint Declaration | | | |
|---|---|---|---|
| **Constraint Name** : PMFResponse_PCS<br>**Structured Type** : PMFResponse_Info<br>**Derivation Path** : PMFResponse_Base<br>**Comments** : PMF information field. | | | |
| **Constraint Value** | | | |
| REPLACE | reasoncode | BY | ReasonCode_03, |
| REPLACE | requestedinfo | BY | PORTConnectState_IUT |



Copyright International Organization for Standardization
Provided by IHS under license with ISO
No reproduction or networking permitted without license from IHS
Not for Resale

| ASN.1 Type Constraint Declaration | | | |
|---|---|---|---|
| **Constraint Name** : PMFResponse_PPS | | | |
| **Structured Type** : PMFResponse_Info | | | |
| **Derivation Path** : PMFResponse_Base | | | |
| **Comments** : PMF information field. | | | |
| **Constraint Value** | | | |
| REPLACE | reasoncode | BY | ReasonCode_03, |
| REPLACE | requestedinfo | BY | PORTPCMState_IUT |

| ASN.1 Type Constraint Declaration | | | |
|---|---|---|---|
| **Constraint Name** : PMFResponse_PPW | | | |
| **Structured Type** : PMFResponse_Info | | | |
| **Derivation Path** : PMFResponse_Base | | | |
| **Comments** : PMF information field. | | | |
| **Constraint Value** | | | |
| REPLACE | reasoncode | BY | ReasonCode_03, |
| REPLACE | requestedinfo | BY | PORTPC_Withhold_IUT |

| ASN.1 Type Constraint Declaration | | | |
|---|---|---|---|
| **Constraint Name** : PMFResponse_PHP | | | |
| **Structured Type** : PMFResponse_Info | | | |
| **Derivation Path** : PMFResponse_Base | | | |
| **Comments** : PMF information field. | | | |
| **Constraint Value** | | | |
| REPLACE | reasoncode | BY | ReasonCode_03, |
| REPLACE | requestedinfo | BY | PORTHardwarePresent_IUT |



Copyright International Organization for Standardization
Provided by IHS under license with ISO
No reproduction or networking permitted without license from IHS
Not for Resale

### 10.3.3 ASN.1 PDU Constraint Declarations

| ASN.1 PDU Constraint Declaration | | |
|---|---|---|
| **Constraint Name** | : | NIF_Req |
| **PDU Type** | : | NIF_Frame |
| **Derivation Path** | : | |
| **Comments** | : | NIF request. |

| Constraint Value | | |
|---|---|---|
| { | SD | JK, |
| | FC | ‘4F’H, |
| | DA | Broadcast, |
| | SA | ?, |
| | Frame_Class | ‘01’H, |
| | Frame_Type | ‘02’H, --request-- |
| | Version_ID | ‘0001’H, |
| | Transaction_ID | NN_Transaction_ID, |
| | Station_ID1 | ‘0000’H, |
| | Station_ID2 | ?, |
| | PAD | PAD_2, |
| | InfoField_Length | ‘0028’H, |
| | Info | NIF_Data, |
| | FCS | ? |
| | ED | T |
| | FS_E | RESET, |
| | FS_A | RESET, |
| | FS_C | RESET, |
| | FS_2 | OMIT, |
| | FS_T | T } |

| ASN.1 PDU Constraint Declaration | | |
|---|---|---|
| **Constraint Name** | : | NIF_IUT_Req |
| **PDU Type** | : | NIF_Frame |
| **Derivation Path** | : | NIF_Req |
| **Comments** | : | IUT NIF request. |

| Constraint Value | | | |
|---|---|---|---|
| REPLACE | SA | BY | IUT_ADDRESS, |
| REPLACE | Station_ID2 | BY | IUT_ADDRESS, |
| REPLACE | Info | BY | NIF_IUT_Data1 |



Copyright International Organization for Standardization
Provided by IHS under license with ISO
No reproduction or networking permitted without license from IHS
Not for Resale

| ASN.1 PDU Constraint Declaration | | | |
|---|---|---|---|
| **Constraint Name** : NIF_TSTR_Req | | | |
| **PDU Type** : NIF_Frame | | | |
| **Derivation Path** : NIF_Req | | | |
| **Comments** : Tester NIF request. | | | |
| **Constraint Value** | | | |
| REPLACE | SA | BY | TESTER_ADDRESS, |
| REPLACE | Transaction_ID | BY | ‘0000071F’H, |
| REPLACE | Station_ID2 | BY | TESTER_ADDRESS, |
| REPLACE | Info | BY | NIF_TSTR_Data1 |

| ASN.1 PDU Constraint Declaration | | | |
|---|---|---|---|
| **Constraint Name** : NIF_Test_Req | | | |
| **PDU Type** : NIF_Frame | | | |
| **Derivation Path** : NIF_Req | | | |
| **Comments** : Tester NIF request used for frame count purpose. | | | |
| **Constraint Value** | | | |
| REPLACE | DA | BY | IUT_ADDRESS, |
| REPLACE | SA | BY | TESTER_ADDRESS, |
| REPLACE | Transaction_ID | BY | ‘00000A24’H, |
| REPLACE | Station_ID2 | BY | TESTER_ADDRESS, |
| REPLACE | Info | BY | NIF_TSTR_Data1 |

| ASN.1 PDU Constraint Declaration | | | |
|---|---|---|---|
| **Constraint Name** : NIF_TSTR_Ann | | | |
| **PDU Type** : NIF_Frame | | | |
| **Derivation Path** : NIF_Req | | | |
| **Comments** : Tester NIF announcement. | | | |
| **Constraint Value** | | | |
| REPLACE | SA | BY | TESTER_ADDRESS, |
| REPLACE | Frame_Type | BY | ‘01’H, --announcement-- |
| REPLACE | Transaction_ID | BY | ‘00000D22’H, |
| REPLACE | Station_ID2 | BY | TESTER_ADDRESS, |
| REPLACE | Info | BY | NIF_TSTR_Dup |


Copyright International Organization for Standardization
Provided by IHS under license with ISO
No reproduction or networking permitted without license from IHS
Not for Resale

| ASN.1 PDU Constraint Declaration | | |
|---|---|---|
| **Constraint Name** | : | NIF_Resp |
| **PDU Type** | : | NIF_Frame |
| **Derivation Path** | : | |
| **Comments** | : | NIF response. |

**Constraint Value**

| | | |
|---|---|---|
| { | SD | JK, |
| | FC | ‘41’H, |
| | DA | ?, |
| | SA | ?, |
| | Frame_Class | ‘01’H, |
| | Frame_Type | ‘03’H, --response-- |
| | Version_ID | ‘0001’H, |
| | Transaction_ID | ?, |
| | Station_ID1 | ‘0000’H, |
| | Station_ID2 | ?, |
| | PAD | PAD_2, |
| | InfoField_Length | ‘0028’H, |
| | Info | NIF_Data, |
| | FCS | ? |
| | ED | T |
| | FS_E | RESET, |
| | FS_A | RESET, |
| | FS_C | RESET, |
| | FS_2 | OMIT, |
| | FS_T | T } |

| ASN.1 PDU Constraint Declaration | | |
|---|---|---|
| **Constraint Name** | : | NIF_IUT_Resp |
| **PDU Type** | : | NIF_Frame |
| **Derivation Path** | : | NIF_Resp |
| **Comments** | : | IUT NIF response. |

**Constraint Value**

| | | | |
|---|---|---|---|
| REPLACE | DA | BY | TESTER_ADDRESS, |
| REPLACE | SA | BY | IUT_ADDRESS, |
| REPLACE | Transaction_ID | BY | ‘0000071F’H, |
| REPLACE | Station_ID2 | BY | IUT_ADDRESS, |
| REPLACE | Info | BY | NIF_IUT_Data2 |



Copyright International Organization for Standardization
Provided by IHS under license with ISO
No reproduction or networking permitted without license from IHS
Not for Resale

| ASN.1 PDU Constraint Declaration | | | |
|---|---|---|---|
| **Constraint Name** : NIF_TSTR_Resp | | | |
| **PDU Type** : NIF_Frame | | | |
| **Derivation Path** : NIF_Resp | | | |
| **Comments** : Tester NIF response. | | | |
| **Constraint Value** | | | |
| REPLACE | DA | BY | IUT_ADDRESS, |
| REPLACE | SA | BY | TESTER_ADDRESS, |
| REPLACE | Transaction_ID | BY | NN_Transaction_ID, |
| REPLACE | Station_ID2 | BY | TESTER_ADDRESS, |
| REPLACE | Info | BY | NIF_TSTR_Data2 |

| ASN.1 PDU Constraint Declaration | | | |
|---|---|---|---|
| **Constraint Name** : NIF_DUP_Resp | | | |
| **PDU Type** : NIF_Frame | | | |
| **Derivation Path** : NIF_Resp | | | |
| **Comments** : Tester NIF response with A bit set to simulate a duplicate address condition on the ring. | | | |
| **Constraint Value** | | | |
| REPLACE | DA | BY | IUT_ADDRESS, |
| REPLACE | SA | BY | TESTER_ADDRESS, |
| REPLACE | Transaction_ID | BY | NN_Transaction_ID, |
| REPLACE | Station_ID2 | BY | TESTER_ADDRESS, |
| REPLACE | Info | BY | NIF_TSTR_Data2, |
| REPLACE | FS_A | BY | SET |

| ASN.1 PDU Constraint Declaration | | | |
|---|---|---|---|
| **Constraint Name** : NIF_Test_Resp | | | |
| **PDU Type** : NIF_Frame | | | |
| **Derivation Path** : NIF_Resp | | | |
| **Comments** : IUT NIF response used for frame count purpose. | | | |
| **Constraint Value** | | | |
| REPLACE | DA | BY | TESTER_ADDRESS, |
| REPLACE | SA | BY | IUT_ADDRESS, |
| REPLACE | Transaction_ID | BY | ‘00000A24’H, |
| REPLACE | Station_ID2 | BY | IUT_ADDRESS, |
| REPLACE | Info | BY | NIF_IUT_Data2 |



Copyright International Organization for Standardization
Provided by IHS under license with ISO
No reproduction or networking permitted without license from IHS
Not for Resale

| ASN.1 PDU Constraint Declaration | |
|---|---|
| **Constraint Name** | : SRF_Ann |
| **PDU Type** | : SRF_Frame |
| **Derivation Path** | : |
| **Comments** | : IUT SRF announcement |

**Constraint Value**

```
{       SD                  JK,
        FC                  '41'H,
        DA                  SMT_SRF_DA,
        SA                  IUT_ADDRESS,
        Frame_Class         '07'H,
        Frame_Type          '01'H,    --announcement--
        Version_ID          '0002'H,
        Transaction_ID      ?,
        Station_ID1         '0000'H,
        Station_ID2         IUT_ADDRESS,
        PAD                 PAD_2,
        InfoField_Length    ?,
        Info                SRF_Data,
        FCS                 ?,
        ED                  T,
        FS_E                RESET,
        FS_A                RESET,
        FS_C                RESET,
        FS_2                OMIT,
        FS_T                T       }
```

| ASN.1 PDU Constraint Declaration | |
|---|---|
| **Constraint Name** | : SRF_Ann_HP |
| **PDU Type** | : SRF_Frame |
| **Derivation Path** | : SRF_Ann |
| **Comments** | : IUT SRF announcement for hold condition assertion. |

**Constraint Value**

REPLACE Info BY SRF_HP

| ASN.1 PDU Constraint Declaration | |
|---|---|
| **Constraint Name** | : SRF_Ann_HS |
| **PDU Type** | : SRF_Frame |
| **Derivation Path** | : SRF_Ann |
| **Comments** | : IUT SRF announcement for hold condition assertion. |

**Constraint Value**

REPLACE Info BY SRF_HS



Copyright International Organization for Standardization
Provided by IHS under license with ISO
No reproduction or networking permitted without license from IHS
Not for Resale

| ASN.1 PDU Constraint Declaration | | | |
|---|---|---|---|
| **Constraint Name** : SRF_Ann_CWB<br>**PDU Type** : SRF_Frame<br>**Derivation Path** : SRF_Ann<br>**Comments** : IUT SRF announcement. | | | |
| **Constraint Value** | | | |
| REPLACE | Info | BY | SRF_CWB |

| ASN.1 PDU Constraint Declaration | | | |
|---|---|---|---|
| **Constraint Name** : SRF_Ann_CWA<br>**PDU Type** : SRF_Frame<br>**Derivation Path** : SRF_Ann<br>**Comments** : IUT SRF announcement. | | | |
| **Constraint Value** | | | |
| REPLACE | Info | BY | SRF_CWA |

| ASN.1 PDU Constraint Declaration | | | |
|---|---|---|---|
| **Constraint Name** : SRF_Ann_UNDA<br>**PDU Type** : SRF_Frame<br>**Derivation Path** : SRF_Ann<br>**Comments** : IUT SRF announcement. | | | |
| **Constraint Value** | | | |
| REPLACE | Info | BY | SRF_UNDA |


Copyright International Organization for Standardization
Provided by IHS under license with ISO
No reproduction or networking permitted without license from IHS
Not for Resale

| ASN.1 PDU Constraint Declaration | |
|---|---|
| **Constraint Name** | : PMFGetReq |
| **PDU Type** | : PMF_Frame1 |
| **Derivation Path** | : |
| **Comments** | : PMF get request. |

**Constraint Value**

```
{       SD                  JK,
        FC                  '41'H,
        DA                  IUT_ADDRESS,
        SA                  TESTER_ADDRESS,
        Frame_Class         '08'H,
        Frame_Type          '02'H,    --request--
        Version_ID          '0002'H,
        Transaction_ID      ?,
        Station_ID1         '0000'H,
        Station_ID2         TESTER_ADDRESS,
        PAD                 PAD_2,
        InfoField_Length    ?,
        getrequest          ?,
        FCS                 ?
        ED                  T
        FS_E                RESET,
        FS_A                RESET,
        FS_C                RESET,
        FS_2                OMIT,
        FS_T                T       }
```

| ASN.1 PDU Constraint Declaration | |
|---|---|
| **Constraint Name** | : PMFGetReq_MIBGrp |
| **PDU Type** | : PMF_Frame1 |
| **Derivation Path** | : PMFGetReq |
| **Comments** | : Get request any MIB attribute group. |

**Constraint Value**

```
REPLACE     Transaction_ID      BY      '00000100'H,
REPLACE     getrequest          BY      MIBGrp_Req
```

| ASN.1 PDU Constraint Declaration | |
|---|---|
| **Constraint Name** | : PMFGetReq_SI |
| **PDU Type** | : PMF_Frame1 |
| **Derivation Path** | : PMFGetReq |
| **Comments** | : Get request SMTStationId. |

**Constraint Value**

```
REPLACE     Transaction_ID      BY      '00000110'H,
REPLACE     getrequest          BY      SMTStationId_Req
```



Copyright International Organization for Standardization
Provided by IHS under license with ISO
No reproduction or networking permitted without license from IHS
Not for Resale

| ASN.1 PDU Constraint Declaration | | | |
|---|---|---|---|
| **Constraint Name** : PMFGetReq_SMD<br>**PDU Type** : PMF_Frame1<br>**Derivation Path** : PMFGetReq<br>**Comments** : Get request SMTManufacturerdata. | | | |
| **Constraint Value** | | | |
| REPLACE | Transaction_ID | BY | ‘00000120’H, |
| REPLACE | getrequest | BY | SMTManufacturerData_Req |

| ASN.1 PDU Constraint Declaration | | | |
|---|---|---|---|
| **Constraint Name** : PMFGetReq_SUD<br>**PDU Type** : PMF_Frame1<br>**Derivation Path** : PMFGetReq<br>**Comments** : Get request SMTUserData. | | | |
| **Constraint Value** | | | |
| REPLACE | Transaction_ID | BY | ‘00000130’H, |
| REPLACE | getrequest | BY | SMTUserData_Req |

| ASN.1 PDU Constraint Declaration | | | |
|---|---|---|---|
| **Constraint Name** : PMFGetReq_SMVI<br>**PDU Type** : PMF_Frame1<br>**Derivation Path** : PMFGetReq<br>**Comments** : Get request SMTMIBVersionId. | | | |
| **Constraint Value** | | | |
| REPLACE | Transaction_ID | BY | ‘00000140’H, |
| REPLACE | getrequest | BY | SMTMIBVersionId_Req |

| ASN.1 PDU Constraint Declaration | | | |
|---|---|---|---|
| **Constraint Name** : PMFGetReq_MacCt<br>**PDU Type** : PMF_Frame1<br>**Derivation Path** : PMFGetReq<br>**Comments** : Get request SMTMac_Ct. | | | |
| **Constraint Value** | | | |
| REPLACE | Transaction_ID | BY | ‘00000200’H, |
| REPLACE | getrequest | BY | SMTMacCt_Req |



--`,,```,,,,````-`-`,,`,,`,`,,`---
Copyright International Organization for Standardization
Provided by IHS under license with ISO
No reproduction or networking permitted without license from IHS
Not for Resale

| ASN.1 PDU Constraint Declaration | | | |
|---|---|---|---|
| **Constraint Name** : PMFGetReq_NonMasterCt<br>**PDU Type** : PMF_Frame1<br>**Derivation Path** : PMFGetReq<br>**Comments** : Get request SMTNonMaster_Ct. | | | |
| **Constraint Value** | | | |
| REPLACE | Transaction_ID | BY | ‘00000210’H, |
| REPLACE | getrequest | BY | SMTNonMasterCt_Req |

| ASN.1 PDU Constraint Declaration | | | |
|---|---|---|---|
| **Constraint Name** : PMFGetReq_MasterCt<br>**PDU Type** : PMF_Frame1<br>**Derivation Path** : PMFGetReq<br>**Comments** : Get request SMTMaster_Ct. | | | |
| **Constraint Value** | | | |
| REPLACE | Transaction_ID | BY | ‘00000220’H, |
| REPLACE | getrequest | BY | SMTMasterCt_Req |

| ASN.1 PDU Constraint Declaration | | | |
|---|---|---|---|
| **Constraint Name** : PMFGetReq_SAP<br>**PDU Type** : PMF_Frame1<br>**Derivation Path** : PMFGetReq<br>**Comments** : Get request SMTAvailablePaths. | | | |
| **Constraint Value** | | | |
| REPLACE | Transaction_ID | BY | ‘00000230’H, |
| REPLACE | getrequest | BY | SMTAvailablePaths_Req |

| ASN.1 PDU Constraint Declaration | | | |
|---|---|---|---|
| **Constraint Name** : PMFGetReq_SCC<br>**PDU Type** : PMF_Frame1<br>**Derivation Path** : PMFGetReq<br>**Comments** : Get request SMTConfigCapabilities. | | | |
| **Constraint Value** | | | |
| REPLACE | Transaction_ID | BY | ‘00000240’H, |
| REPLACE | getrequest | BY | SMTConfigCapabilities_Req |



Copyright International Organization for Standardization
Provided by IHS under license with ISO
No reproduction or networking permitted without license from IHS
Not for Resale

| ASN.1 PDU Constraint Declaration | | | |
|---|---|---|---|
| **Constraint Name** : PMFGetReq_SCC1 | | | |
| **PDU Type** : PMF_Frame1 | | | |
| **Derivation Path** : PMFGetReq | | | |
| **Comments** : Get request SMTConfigCapabilities. | | | |
| **Constraint Value** | | | |
| REPLACE | Transaction_ID | BY | '00000241'H, |
| REPLACE | getrequest | BY | SMTConfigCapabilities_Req |

| ASN.1 PDU Constraint Declaration | | | |
|---|---|---|---|
| **Constraint Name** : PMFGetReq_SCC2 | | | |
| **PDU Type** : PMF_Frame1 | | | |
| **Derivation Path** : PMFGetReq | | | |
| **Comments** : Get request SMTConfigCapabilities. | | | |
| **Constraint Value** | | | |
| REPLACE | Transaction_ID | BY | '00000242'H, |
| REPLACE | getrequest | BY | SMTConfigCapabilities_Req |

| ASN.1 PDU Constraint Declaration | | | |
|---|---|---|---|
| **Constraint Name** : PMFGetReq_SCP | | | |
| **PDU Type** : PMF_Frame1 | | | |
| **Derivation Path** : PMFGetReq | | | |
| **Comments** : Get request SMTConnectionPolicy. | | | |
| **Constraint Value** | | | |
| REPLACE | Transaction_ID | BY | '00000260'H, |
| REPLACE | getrequest | BY | SMTConnectionPolicy_Req |

| ASN.1 PDU Constraint Declaration | | | |
|---|---|---|---|
| **Constraint Name** : PMFGetReq_TN | | | |
| **PDU Type** : PMF_Frame1 | | | |
| **Derivation Path** : PMFGetReq | | | |
| **Comments** : Get request SMTT_Notify. | | | |
| **Constraint Value** | | | |
| REPLACE | Transaction_ID | BY | '00000270'H, |
| REPLACE | getrequest | BY | SMTT_Notify_Req |

| ASN.1 PDU Constraint Declaration | | | |
|---|---|---|---|
| **Constraint Name** : PMFGetReq_SRP | | | |
| **PDU Type** : PMF_Frame1 | | | |
| **Derivation Path** : PMFGetReq | | | |
| **Comments** : Get request SMTStatRptPolicy. | | | |
| **Constraint Value** | | | |
| REPLACE | Transaction_ID | BY | '00000280'H, |
| REPLACE | getrequest | BY | SMTStatRptPolicy_Req |


Copyright International Organization for Standardization
Provided by IHS under license with ISO
No reproduction or networking permitted without license from IHS
Not for Resale

| ASN.1 PDU Constraint Declaration | | | |
|---|---|---|---|
| **Constraint Name** : PMFGetReq_TME<br>**PDU Type** : PMF_Frame1<br>**Derivation Path** : PMFGetReq<br>**Comments** : Get request SMTTrace_Max_Expiration. | | | |
| **Constraint Value** | | | |
| REPLACE | Transaction_ID | BY | ‘00000290’H, |
| REPLACE | getrequest | BY | SMTTrace_MaxExpiration_Req |

| ASN.1 PDU Constraint Declaration | | | |
|---|---|---|---|
| **Constraint Name** : PMFGetReq_Thru1<br>**PDU Type** : PMF_Frame1<br>**Derivation Path** : PMFGetReq<br>**Comments** : Get request SMTCF_State. | | | |
| **Constraint Value** | | | |
| REPLACE | Transaction_ID | BY | ‘00000310’H, |
| REPLACE | getrequest | BY | SMTCF_State_Req |

| ASN.1 PDU Constraint Declaration | | | |
|---|---|---|---|
| **Constraint Name** : PMFGetReq_Thru2<br>**PDU Type** : PMF_Frame1<br>**Derivation Path** : PMFGetReq<br>**Comments** : Get request SMTCF_State. | | | |
| **Constraint Value** | | | |
| REPLACE | Transaction_ID | BY | ‘00000311’H, |
| REPLACE | getrequest | BY | SMTCF_State_Req |

| ASN.1 PDU Constraint Declaration | | | |
|---|---|---|---|
| **Constraint Name** : PMFGetReq_CWRPA<br>**PDU Type** : PMF_Frame1<br>**Derivation Path** : PMFGetReq<br>**Comments** : Get request SMTCF_State. | | | |
| **Constraint Value** | | | |
| REPLACE | Transaction_ID | BY | ‘00000312’H, |
| REPLACE | getrequest | BY | SMTCF_State_Req |



Copyright International Organization for Standardization
Provided by IHS under license with ISO
No reproduction or networking permitted without license from IHS
Not for Resale

| ASN.1 PDU Constraint Declaration | | | |
|---|---|---|---|
| **Constraint Name** : PMFGetReq_CWRPB | | | |
| **PDU Type** : PMF_Frame1 | | | |
| **Derivation Path** : PMFGetReq | | | |
| **Comments** : Get request SMTCF_State | | | |
| **Constraint Value** | | | |
| REPLACE | Transaction_ID | BY | ‘00000313’H, |
| REPLACE | getrequest | BY | SMTCF_State_Req |

| ASN.1 PDU Constraint Declaration | | | |
|---|---|---|---|
| **Constraint Name** : PMFGetReq_WRPS | | | |
| **PDU Type** : PMF_Frame1 | | | |
| **Derivation Path** : PMFGetReq | | | |
| **Comments** : Get request SMTCF_State. | | | |
| **Constraint Value** | | | |
| REPLACE | Transaction_ID | BY | ‘00000314’H, |
| REPLACE | getrequest | BY | SMTCF_State_Req |

| ASN.1 PDU Constraint Declaration | | | |
|---|---|---|---|
| **Constraint Name** : PMFGetReq_WRPAB | | | |
| **PDU Type** : PMF_Frame1 | | | |
| **Derivation Path** : PMFGetReq | | | |
| **Comments** : Get request SMTCF_State. | | | |
| **Constraint Value** | | | |
| REPLACE | Transaction_ID | BY | ‘00000315’H, |
| REPLACE | getrequest | BY | SMTCF_State_Req |

| ASN.1 PDU Constraint Declaration | | | |
|---|---|---|---|
| **Constraint Name** : PMFGetReq_WRPA | | | |
| **PDU Type** : PMF_Frame1 | | | |
| **Derivation Path** : PMFGetReq | | | |
| **Comments** : Get request SMTCF_State. | | | |
| **Constraint Value** | | | |
| REPLACE | Transaction_ID | BY | ‘00000316’H, |
| REPLACE | getrequest | BY | SMTCF_State_Req |

--`,,```,,,,````-`-`,,`,,`,`,,`---



Copyright International Organization for Standardization
Provided by IHS under license with ISO
No reproduction or networking permitted without license from IHS
Not for Resale

| ASN.1 PDU Constraint Declaration | | | |
|---|---|---|---|
| **Constraint Name** : PMFGetReq_WRPB<br>**PDU Type** : PMF_Frame1<br>**Derivation Path** : PMFGetReq<br>**Comments** : SMTCF_State. | | | |
| **Constraint Value** | | | |
| REPLACE | Transaction_ID | BY | ‘00000317’H, |
| REPLACE | getrequest | BY | SMTCF_State_Req |

| ASN.1 PDU Constraint Declaration | | | |
|---|---|---|---|
| **Constraint Name** : PMFGetReq_HS1<br>**PDU Type** : PMF_Frame1<br>**Derivation Path** : PMFGetReq<br>**Comments** : Get request SMTHoldState. | | | |
| **Constraint Value** | | | |
| REPLACE | Transaction_ID | BY | ‘00000320’H, |
| REPLACE | getrequest | BY | SMTHoldState_Req |

| ASN.1 PDU Constraint Declaration | | | |
|---|---|---|---|
| **Constraint Name** : PMFGetReq_HS2<br>**PDU Type** : PMF_Frame1<br>**Derivation Path** : PMFGetReq<br>**Comments** : Get request SMTHoldState. | | | |
| **Constraint Value** | | | |
| REPLACE | Transaction_ID | BY | ‘00000321’H, |
| REPLACE | getrequest | BY | SMTHoldState_Req |

| ASN.1 PDU Constraint Declaration | | | |
|---|---|---|---|
| **Constraint Name** : PMFGetReq_HS3<br>**PDU Type** : PMF_Frame1<br>**Derivation Path** : PMFGetReq<br>**Comments** : Get request SMTHoldState. | | | |
| **Constraint Value** | | | |
| REPLACE | Transaction_ID | BY | ‘00000322’H, |
| REPLACE | getrequest | BY | SMTHoldState_Req |



Copyright International Organization for Standardization
Provided by IHS under license with ISO
No reproduction or networking permitted without license from IHS
Not for Resale

| ASN.1 PDU Constraint Declaration | | | |
|---|---|---|---|
| **Constraint Name** : PMFGetReq_SST | | | |
| **PDU Type** : PMF_Frame1 | | | |
| **Derivation Path** : PMFGetReq | | | |
| **Comments** : Get request SMTStationStatus. | | | |
| **Constraint Value** | | | |
| REPLACE | Transaction_ID | BY | ‘00000340’H, |
| REPLACE | getrequest | BY | SMTStationStatus_Req |

| ASN.1 PDU Constraint Declaration | | | |
|---|---|---|---|
| **Constraint Name** : PMFGetReq_SSS1 | | | |
| **PDU Type** : PMF_Frame1 | | | |
| **Derivation Path** : PMFGetReq | | | |
| **Comments** : Get request SMTStationStatus. | | | |
| **Constraint Value** | | | |
| REPLACE | Transaction_ID | BY | ‘00000341’H, |
| REPLACE | getrequest | BY | SMTStationStatus_Req |

| ASN.1 PDU Constraint Declaration | | | |
|---|---|---|---|
| **Constraint Name** : PMFGetReq_SSS2 | | | |
| **PDU Type** : PMF_Frame1 | | | |
| **Derivation Path** : PMFGetReq | | | |
| **Comments** : Get request SMTStationStatus. | | | |
| **Constraint Value** | | | |
| REPLACE | Transaction_ID | BY | ‘00000342’H, |
| REPLACE | getrequest | BY | SMTStationStatus_Req |

| ASN.1 PDU Constraint Declaration | | | |
|---|---|---|---|
| **Constraint Name** : PMFGetReq_SSC | | | |
| **PDU Type** : PMF_Frame1 | | | |
| **Derivation Path** : PMFGetReq | | | |
| **Comments** : Get request SMTStationStatus. | | | |
| **Constraint Value** | | | |
| REPLACE | Transaction_ID | BY | ‘00000343’H, |
| REPLACE | getrequest | BY | SMTStationStatus_Req |


Copyright International Organization for Standardization
Provided by IHS under license with ISO
No reproduction or networking permitted without license from IHS
Not for Resale

| ASN.1 PDU Constraint Declaration | | | |
|---|---|---|---|
| **Constraint Name** : PMFGetReq_PWF1 | | | |
| **PDU Type** : PMF_Frame1 | | | |
| **Derivation Path** : PMFGetReq | | | |
| **Comments** : Get request SMTPeerWrapFlag. | | | |
| **Constraint Value** | | | |
| REPLACE | Transaction_ID | BY | ‘00000350’H, |
| REPLACE | getrequest | BY | SMTPeerWrapFlag_Req |

| ASN.1 PDU Constraint Declaration | | | |
|---|---|---|---|
| **Constraint Name** : PMFGetReq_PWF2 | | | |
| **PDU Type** : PMF_Frame1 | | | |
| **Derivation Path** : PMFGetReq | | | |
| **Comments** : Get request SMTPeerWrapFlag. | | | |
| **Constraint Value** | | | |
| REPLACE | Transaction_ID | BY | ‘00000351’H, |
| REPLACE | getrequest | BY | SMTPeerWrapFlag_Req |

| ASN.1 PDU Constraint Declaration | | | |
|---|---|---|---|
| **Constraint Name** : PMFGetReq_PWF3 | | | |
| **PDU Type** : PMF_Frame1 | | | |
| **Derivation Path** : PMFGetReq | | | |
| **Comments** : Get request SMTPeerWrapFlag. | | | |
| **Constraint Value** | | | |
| REPLACE | Transaction_ID | BY | ‘00000352’H, |
| REPLACE | getrequest | BY | SMTPeerWrapFlag_Req |

| ASN.1 PDU Constraint Declaration | | | |
|---|---|---|---|
| **Constraint Name** : PMFGetReq_PWF4 | | | |
| **PDU Type** : PMF_Frame1 | | | |
| **Derivation Path** : PMFGetReq | | | |
| **Comments** : Get request SMTPeerWrapFlag. | | | |
| **Constraint Value** | | | |
| REPLACE | Transaction_ID | BY | ‘00000353’H, |
| REPLACE | getrequest | BY | SMTPeerWrapFlag_Req |



--`,,```,,,,````-`-`,,`,,`,`,,`---
Copyright International Organization for Standardization
Provided by IHS under license with ISO
No reproduction or networking permitted without license from IHS
Not for Resale

| ASN.1 PDU Constraint Declaration | | | |
|---|---|---|---|
| **Constraint Name** : PMFGetReq_MBF<br>**PDU Type** : PMF_Frame1<br>**Derivation Path** : PMFGetReq<br>**Comments** : Get request MACBridgeFunctions. | | | |
| **Constraint Value** | | | |
| REPLACE | Transaction_ID | BY | ‘00000620’H, |
| REPLACE | getrequest | BY | MACBridgeFunctions_Req |

| ASN.1 PDU Constraint Declaration | | | |
|---|---|---|---|
| **Constraint Name** : PMFGetReq_TMC<br>**PDU Type** : PMF_Frame1<br>**Derivation Path** : PMFGetReq<br>**Comments** : Get request MACT_MaxCapability. | | | |
| **Constraint Value** | | | |
| REPLACE | Transaction_ID | BY | ‘00000630’H, |
| REPLACE | getrequest | BY | MACT_MaxCapability_Req |

| ASN.1 PDU Constraint Declaration | | | |
|---|---|---|---|
| **Constraint Name** : PMFGetReq_TVXC<br>**PDU Type** : PMF_Frame1<br>**Derivation Path** : PMFGetReq<br>**Comments** : Get request MACTVXCapability. | | | |
| **Constraint Value** | | | |
| REPLACE | Transaction_ID | BY | ‘00000640’H, |
| REPLACE | getrequest | BY | MACTVXCapability_Req |

| ASN.1 PDU Constraint Declaration | | | |
|---|---|---|---|
| **Constraint Name** : PMFGetReq_MAP<br>**PDU Type** : PMF_Frame1<br>**Derivation Path** : PMFGetReq<br>**Comments** : Get request MACAvailablePaths. | | | |
| **Constraint Value** | | | |
| REPLACE | Transaction_ID | BY | ‘00000700’H, |
| REPLACE | getrequest | BY | MACAvailablePaths_Req |


Copyright International Organization for Standardization
Provided by IHS under license with ISO
No reproduction or networking permitted without license from IHS
Not for Resale

| ASN.1 PDU Constraint Declaration | | | |
|---|---|---|---|
| **Constraint Name** : PMFGetReq_MCP<br>**PDU Type** : PMF_Frame1<br>**Derivation Path** : PMFGetReq<br>**Comments** : Get request MACCurrentPath. | | | |
| **Constraint Value** | | | |
| REPLACE | Transaction_ID | BY | ‘00000710’H, |
| REPLACE | getrequest | BY | MACCurrentPath_Req |

| ASN.1 PDU Constraint Declaration | | | |
|---|---|---|---|
| **Constraint Name** : PMFGetReq_UNA<br>**PDU Type** : PMF_Frame1<br>**Derivation Path** : PMFGetReq<br>**Comments** : Get request MACUpstreamNbr. | | | |
| **Constraint Value** | | | |
| REPLACE | Transaction_ID | BY | ‘00000720’H, |
| REPLACE | getrequest | BY | MACUpstreamNbr_Req |

| ASN.1 PDU Constraint Declaration | | | |
|---|---|---|---|
| **Constraint Name** : PMFGetReq_DNA<br>**PDU Type** : PMF_Frame1<br>**Derivation Path** : PMFGetReq<br>**Comments** : Get request MACDownstreamNbr. | | | |
| **Constraint Value** | | | |
| REPLACE | Transaction_ID | BY | ‘00000730’H, |
| REPLACE | getrequest | BY | MACDownstreamNbr_Req |

| ASN.1 PDU Constraint Declaration | | | |
|---|---|---|---|
| **Constraint Name** : PMFGetReq_OUNA<br>**PDU Type** : PMF_Frame1<br>**Derivation Path** : PMFGetReq<br>**Comments** : Get request MACOldUpstreamNbr. | | | |
| **Constraint Value** | | | |
| REPLACE | Transaction_ID | BY | ‘00000740’H, |
| REPLACE | getrequest | BY | MACOldUpstreamNbr_Req |

| ASN.1 PDU Constraint Declaration | | | |
|---|---|---|---|
| **Constraint Name** : PMFGetReq_ODNA<br>**PDU Type** : PMF_Frame1<br>**Derivation Path** : PMFGetReq<br>**Comments** : Get request MACOldDownstreamNbr. | | | |
| **Constraint Value** | | | |
| REPLACE | Transaction_ID | BY | ‘00000750’H, |
| REPLACE | getrequest | BY | MACOldDownstreamNbr_Req |



Copyright International Organization for Standardization
Provided by IHS under license with ISO
No reproduction or networking permitted without license from IHS
Not for Resale

| ASN.1 PDU Constraint Declaration | | | |
|---|---|---|---|
| **Constraint Name** : PMFGetReq_MDAT1 | | | |
| **PDU Type** : PMF_Frame1 | | | |
| **Derivation Path** : PMFGetReq | | | |
| **Comments** : Get request MACDupAddressTest. | | | |
| **Constraint Value** | | | |
| REPLACE | Transaction_ID | BY | ‘00000760’H, |
| REPLACE | getrequest | BY | MACDupAddressTest_Req |

| ASN.1 PDU Constraint Declaration | | | |
|---|---|---|---|
| **Constraint Name** : PMFGetReq_MDAT2 | | | |
| **PDU Type** : PMF_Frame1 | | | |
| **Derivation Path** : PMFGetReq | | | |
| **Comments** : Get request MACDupAddressTest. | | | |
| **Constraint Value** | | | |
| REPLACE | Transaction_ID | BY | ‘00000762’H, |
| REPLACE | getrequest | BY | MACDupAddressTest_Req |

| ASN.1 PDU Constraint Declaration | | | |
|---|---|---|---|
| **Constraint Name** : PMFGetReq_MRP | | | |
| **PDU Type** : PMF_Frame1 | | | |
| **Derivation Path** : PMFGetReq | | | |
| **Comments** : Get request MACRequestedPaths. | | | |
| **Constraint Value** | | | |
| REPLACE | Transaction_ID | BY | ‘00000770’H, |
| REPLACE | getrequest | BY | MACRequestedPaths_Req |

| ASN.1 PDU Constraint Declaration | | | |
|---|---|---|---|
| **Constraint Name** : PMFGetReq_MDPT | | | |
| **PDU Type** : PMF_Frame1 | | | |
| **Derivation Path** : PMFGetReq | | | |
| **Comments** : Get request MACDownstreamPortType. | | | |
| **Constraint Value** | | | |
| REPLACE | Transaction_ID | BY | ‘00000780’H, |
| REPLACE | getrequest | BY | MACDownstreamPORTType_Req |

--`,,```,,,,````-`-`,,`,,`,`,,`---



Copyright International Organization for Standardization
Provided by IHS under license with ISO
No reproduction or networking permitted without license from IHS
Not for Resale

| ASN.1 PDU Constraint Declaration | | | |
|---|---|---|---|
| **Constraint Name** : PMFGetReq_MI0 | | | |
| **PDU Type** : PMF_Frame1 | | | |
| **Derivation Path** : PMFGetReq | | | |
| **Comments** : Get request MACIndex. | | | |
| **Constraint Value** | | | |
| REPLACE | Transaction_ID | BY | ‘00000790’H, |
| REPLACE | getrequest | BY | MACIndex_Req0 |

| ASN.1 PDU Constraint Declaration | | | |
|---|---|---|---|
| **Constraint Name** : PMFGetReq_MI1 | | | |
| **PDU Type** : PMF_Frame1 | | | |
| **Derivation Path** : PMFGetReq | | | |
| **Comments** : Get request MACIndex. | | | |
| **Constraint Value** | | | |
| REPLACE | Transaction_ID | BY | ‘00000792’H, |
| REPLACE | getrequest | BY | MACIndex_Req1 |

| ASN.1 PDU Constraint Declaration | | | |
|---|---|---|---|
| **Constraint Name** : PMFGetReq_MSA | | | |
| **PDU Type** : PMF_Frame1 | | | |
| **Derivation Path** : PMFGetReq | | | |
| **Comments** : Get request MACSMTAddress. | | | |
| **Constraint Value** | | | |
| REPLACE | Transaction_ID | BY | ‘00000800’H, |
| REPLACE | getrequest | BY | MACSMTAddress_Req |

| ASN.1 PDU Constraint Declaration | | | |
|---|---|---|---|
| **Constraint Name** : PMFGetReq_MLGA | | | |
| **PDU Type** : PMF_Frame1 | | | |
| **Derivation Path** : PMFGetReq | | | |
| **Comments** : Get request MACLongGrpAddress. | | | |
| **Constraint Value** | | | |
| REPLACE | Transaction_ID | BY | ‘00000810’H, |
| REPLACE | getrequest | BY | MACLongGrpAddress_Req |

| ASN.1 PDU Constraint Declaration | | | |
|---|---|---|---|
| **Constraint Name** : PMFGetReq_MSGA | | | |
| **PDU Type** : PMF_Frame1 | | | |
| **Derivation Path** : PMFGetReq | | | |
| **Comments** : Get request MACShortGrpAddress. | | | |
| **Constraint Value** | | | |
| REPLACE | Transaction_ID | BY | ‘00000820’H, |
| REPLACE | getrequest | BY | MACShortGrpAddress_Req |



Copyright International Organization for Standardization
Provided by IHS under license with ISO
No reproduction or networking permitted without license from IHS
Not for Resale

| ASN.1 PDU Constraint Declaration | | | |
|---|---|---|---|
| **Constraint Name** : PMFGetReq_MT_Req | | | |
| **PDU Type** : PMF_Frame1 | | | |
| **Derivation Path** : PMFGetReq | | | |
| **Comments** : Get request MACT_Req. | | | |
| **Constraint Value** | | | |
| REPLACE | Transaction_ID | BY | ‘00000900’H, |
| REPLACE | getrequest | BY | MACT_Req_Req |

| ASN.1 PDU Constraint Declaration | | | |
|---|---|---|---|
| **Constraint Name** : PMFGetReq_MT_Neg | | | |
| **PDU Type** : PMF_Frame1 | | | |
| **Derivation Path** : PMFGetReq | | | |
| **Comments** : Get request MACT_Neg. | | | |
| **Constraint Value** | | | |
| REPLACE | Transaction_ID | BY | ‘00000910’H, |
| REPLACE | getrequest | BY | MACT_Neg_Req |

| ASN.1 PDU Constraint Declaration | | | |
|---|---|---|---|
| **Constraint Name** : PMFGetReq_MT_Max | | | |
| **PDU Type** : PMF_Frame1 | | | |
| **Derivation Path** : PMFGetReq | | | |
| **Comments** : Get request MACT_Max. | | | |
| **Constraint Value** | | | |
| REPLACE | Transaction_ID | BY | ‘00000920’H, |
| REPLACE | getrequest | BY | MACT_Max_Req |

| ASN.1 PDU Constraint Declaration | | | |
|---|---|---|---|
| **Constraint Name** : PMFGetReq_MTvx | | | |
| **PDU Type** : PMF_Frame1 | | | |
| **Derivation Path** : PMFGetReq | | | |
| **Comments** : Get request MACTvxValue. | | | |
| **Constraint Value** | | | |
| REPLACE | Transaction_ID | BY | ‘00000930’H, |
| REPLACE | getrequest | BY | MACTvxValue_Req |


Copyright International Organization for Standardization
Provided by IHS under license with ISO
No reproduction or networking permitted without license from IHS
Not for Resale

| ASN.1 PDU Constraint Declaration | | | |
|---|---|---|---|
| **Constraint Name** : PMFGetReq_MT_Pri0<br>**PDU Type** : PMF_Frame1<br>**Derivation Path** : PMFGetReq<br>**Comments** : Get request MACT_Pri0. | | | |
| **Constraint Value** | | | |
| REPLACE | Transaction_ID | BY | ‘00000940’H, |
| REPLACE | getrequest | BY | MACT_Pri0_Req |

| ASN.1 PDU Constraint Declaration | | | |
|---|---|---|---|
| **Constraint Name** : PMFGetReq_MT_Pri1<br>**PDU Type** : PMF_Frame1<br>**Derivation Path** : PMFGetReq<br>**Comments** : Get request MACT_Pri1. | | | |
| **Constraint Value** | | | |
| REPLACE | Transaction_ID | BY | ‘00000950’H, |
| REPLACE | getrequest | BY | MACT_Pri1_Req |

| ASN.1 PDU Constraint Declaration | | | |
|---|---|---|---|
| **Constraint Name** : PMFGetReq_MT_Pri2<br>**PDU Type** : PMF_Frame1<br>**Derivation Path** : PMFGetReq<br>**Comments** : Get request MACT_Pri2. | | | |
| **Constraint Value** | | | |
| REPLACE | Transaction_ID | BY | ‘00000960’H, |
| REPLACE | getrequest | BY | MACT_Pri2_Req |

| ASN.1 PDU Constraint Declaration | | | |
|---|---|---|---|
| **Constraint Name** : PMFGetReq_MT_Pri3<br>**PDU Type** : PMF_Frame1<br>**Derivation Path** : PMFGetReq<br>**Comments** : Get request MACT_Pri3. | | | |
| **Constraint Value** | | | |
| REPLACE | Transaction_ID | BY | ‘00000970’H, |
| REPLACE | getrequest | BY | MACT_Pri3_Req |



Copyright International Organization for Standardization
Provided by IHS under license with ISO
No reproduction or networking permitted without license from IHS
Not for Resale

| ASN.1 PDU Constraint Declaration | | | |
|---|---|---|---|
| **Constraint Name** : PMFGetReq_MT_Pri4 | | | |
| **PDU Type** : PMF_Frame1 | | | |
| **Derivation Path** : PMFGetReq | | | |
| **Comments** : Get request MACT_Pri4. | | | |
| **Constraint Value** | | | |
| REPLACE | Transaction_ID | BY | ‘00000980’H, |
| REPLACE | getrequest | BY | MACT_Pri4_Req |

| ASN.1 PDU Constraint Declaration | | | |
|---|---|---|---|
| **Constraint Name** : PMFGetReq_MT_Pri5 | | | |
| **PDU Type** : PMF_Frame1 | | | |
| **Derivation Path** : PMFGetReq | | | |
| **Comments** : Get request MACT_Pri5. | | | |
| **Constraint Value** | | | |
| REPLACE | Transaction_ID | BY | ‘00000990’H, |
| REPLACE | getrequest | BY | MACT_Pri5_Req |

| ASN.1 PDU Constraint Declaration | | | |
|---|---|---|---|
| **Constraint Name** : PMFGetReq_MT_Pri6 | | | |
| **PDU Type** : PMF_Frame1 | | | |
| **Derivation Path** : PMFGetReq | | | |
| **Comments** : Get request MACT_Pri6. | | | |
| **Constraint Value** | | | |
| REPLACE | Transaction_ID | BY | ‘000009A0’H, |
| REPLACE | getrequest | BY | MACT_Pri6_Req |

| ASN.1 PDU Constraint Declaration | | | |
|---|---|---|---|
| **Constraint Name** : PMFGetReq_MFC1 | | | |
| **PDU Type** : PMF_Frame1 | | | |
| **Derivation Path** : PMFGetReq | | | |
| **Comments** : Get request MACFrame_Ct. | | | |
| **Constraint Value** | | | |
| REPLACE | Transaction_ID | BY | ‘00000A00’H, |
| REPLACE | getrequest | BY | MACFrame_Ct_Req |



Copyright International Organization for Standardization
Provided by IHS under license with ISO
No reproduction or networking permitted without license from IHS
Not for Resale

| ASN.1 PDU Constraint Declaration | | | |
|---|---|---|---|
| **Constraint Name** : PMFGetReq_MFC2 | | | |
| **PDU Type** : PMF_Frame1 | | | |
| **Derivation Path** : PMFGetReq | | | |
| **Comments** : Get request MACFrame_Ct. | | | |
| **Constraint Value** | | | |
| REPLACE | Transaction_ID | BY | ‘00000A02’H, |
| REPLACE | getrequest | BY | MACFrame_Ct_Req |

| ASN.1 PDU Constraint Declaration | | | |
|---|---|---|---|
| **Constraint Name** : PMFGetReq_MCC1 | | | |
| **PDU Type** : PMF_Frame1 | | | |
| **Derivation Path** : PMFGetReq | | | |
| **Comments** : Get request MACCopied_Ct. | | | |
| **Constraint Value** | | | |
| REPLACE | Transaction_ID | BY | ‘00000A10’H, |
| REPLACE | getrequest | BY | MACCopied_Ct_Req |

| ASN.1 PDU Constraint Declaration | | | |
|---|---|---|---|
| **Constraint Name** : PMFGetReq_MCC2 | | | |
| **PDU Type** : PMF_Frame1 | | | |
| **Derivation Path** : PMFGetReq | | | |
| **Comments** : Get request MACCopied_Ct. | | | |
| **Constraint Value** | | | |
| REPLACE | Transaction_ID | BY | ‘00000A12’H, |
| REPLACE | getrequest | BY | MACCopied_Ct_Req |

| ASN.1 PDU Constraint Declaration | | | |
|---|---|---|---|
| **Constraint Name** : PMFGetReq_MTC1 | | | |
| **PDU Type** : PMF_Frame1 | | | |
| **Derivation Path** : PMFGetReq | | | |
| **Comments** : Get request MACTransmit_Ct. | | | |
| **Constraint Value** | | | |
| REPLACE | Transaction_ID | BY | ‘00000A20’H, |
| REPLACE | getrequest | BY | MACTransmit_Ct_Req |



Copyright International Organization for Standardization
Provided by IHS under license with ISO
No reproduction or networking permitted without license from IHS
Not for Resale

| ASN.1 PDU Constraint Declaration | | | |
|---|---|---|---|
| **Constraint Name** : PMFGetReq_MTC2 | | | |
| **PDU Type** : PMF_Frame1 | | | |
| **Derivation Path** : PMFGetReq | | | |
| **Comments** : Get request MACTransmit_Ct. | | | |
| **Constraint Value** | | | |
| REPLACE | Transaction_ID | BY | '00000A22'H, |
| REPLACE | getrequest | BY | MACTransmit_Ct_Req |

| ASN.1 PDU Constraint Declaration | | | |
|---|---|---|---|
| **Constraint Name** : PMFGetReq_MTKC1 | | | |
| **PDU Type** : PMF_Frame1 | | | |
| **Derivation Path** : PMFGetReq | | | |
| **Comments** : Get request MACToken_Ct. | | | |
| **Constraint Value** | | | |
| REPLACE | Transaction_ID | BY | '00000A30'H, |
| REPLACE | getrequest | BY | MACToken_Ct_Req |

| ASN.1 PDU Constraint Declaration | | | |
|---|---|---|---|
| **Constraint Name** : PMFGetReq_MTKC2 | | | |
| **PDU Type** : PMF_Frame1 | | | |
| **Derivation Path** : PMFGetReq | | | |
| **Comments** : Get request MACToken_Ct. | | | |
| **Constraint Value** | | | |
| REPLACE | Transaction_ID | BY | '00000A32'H, |
| REPLACE | getrequest | BY | MACToken_Ct_Req |

| ASN.1 PDU Constraint Declaration | | | |
|---|---|---|---|
| **Constraint Name** : PMFGetReq_MEC1 | | | |
| **PDU Type** : PMF_Frame1 | | | |
| **Derivation Path** : PMFGetReq | | | |
| **Comments** : Get request MACError_Ct. | | | |
| **Constraint Value** | | | |
| REPLACE | Transaction_ID | BY | '00000A40'H, |
| REPLACE | getrequest | BY | MACError_Ct_Req |

| ASN.1 PDU Constraint Declaration | | | |
|---|---|---|---|
| **Constraint Name** : PMFGetReq_MEC2 | | | |
| **PDU Type** : PMF_Frame1 | | | |
| **Derivation Path** : PMFGetReq | | | |
| **Comments** : Get request MACError_Ct. | | | |
| **Constraint Value** | | | |
| REPLACE | Transaction_ID | BY | '00000A42'H, |
| REPLACE | getrequest | BY | MACError_Ct_Req |


Copyright International Organization for Standardization
Provided by IHS under license with ISO
No reproduction or networking permitted without license from IHS
Not for Resale

| ASN.1 PDU Constraint Declaration | | | |
|---|---|---|---|
| **Constraint Name** : PMFGetReq_MLC1 | | | |
| **PDU Type** : PMF_Frame1 | | | |
| **Derivation Path** : PMFGetReq | | | |
| **Comments** : Get request MACLost_Ct. | | | |
| **Constraint Value** | | | |
| REPLACE | Transaction_ID | BY | ‘00000A50’H, |
| REPLACE | getrequest | BY | MACLost_Ct_Req |

| ASN.1 PDU Constraint Declaration | | | |
|---|---|---|---|
| **Constraint Name** : PMFGetReq_MLC2 | | | |
| **PDU Type** : PMF_Frame1 | | | |
| **Derivation Path** : PMFGetReq | | | |
| **Comments** : Get request MACLost_Ct. | | | |
| **Constraint Value** | | | |
| REPLACE | Transaction_ID | BY | ‘00000A52’H, |
| REPLACE | getrequest | BY | MACLost_Ct_Req |

| ASN.1 PDU Constraint Declaration | | | |
|---|---|---|---|
| **Constraint Name** : PMFGetReq_MTEC1 | | | |
| **PDU Type** : PMF_Frame1 | | | |
| **Derivation Path** : PMFGetReq | | | |
| **Comments** : Get request MACTvxExpired_Ct. | | | |
| **Constraint Value** | | | |
| REPLACE | Transaction_ID | BY | ‘00000A60’H, |
| REPLACE | getrequest | BY | MACTvxExpired_Ct_Req |

| ASN.1 PDU Constraint Declaration | | | |
|---|---|---|---|
| **Constraint Name** : PMFGetReq_MTEC2 | | | |
| **PDU Type** : PMF_Frame1 | | | |
| **Derivation Path** : PMFGetReq | | | |
| **Comments** : Get request MACTvxExpired_Ct. | | | |
| **Constraint Value** | | | |
| REPLACE | Transaction_ID | BY | ‘00000A62’H, |
| REPLACE | getrequest | BY | MACTvxExpired_Ct_Req |

| ASN.1 PDU Constraint Declaration | | | |
|---|---|---|---|
| **Constraint Name** : PMFGetReq_MLC1 | | | |
| **PDU Type** : PMF_Frame1 | | | |
| **Derivation Path** : PMFGetReq | | | |
| **Comments** : Get request MACLate_Ct. | | | |
| **Constraint Value** | | | |
| REPLACE | Transaction_ID | BY | ‘00000A80’H, |
| REPLACE | getrequest | BY | MACLate_Ct_Req |



Copyright International Organization for Standardization
Provided by IHS under license with ISO
No reproduction or networking permitted without license from IHS
Not for Resale

| ASN.1 PDU Constraint Declaration | | | |
|---|---|---|---|
| **Constraint Name** : PMFGetReq_MLC2 | | | |
| **PDU Type** : PMF_Frame1 | | | |
| **Derivation Path** : PMFGetReq | | | |
| **Comments** : Get request MACLate_Ct. | | | |
| **Constraint Value** | | | |
| REPLACE | Transaction_ID | BY | ‘00000A82’H, |
| REPLACE | getrequest | BY | MACLate_Ct_Req |

| ASN.1 PDU Constraint Declaration | | | |
|---|---|---|---|
| **Constraint Name** : PMFGetReq_MRS | | | |
| **PDU Type** : PMF_Frame1 | | | |
| **Derivation Path** : PMFGetReq | | | |
| **Comments** : Get request MACRMTState. | | | |
| **Constraint Value** | | | |
| REPLACE | Transaction_ID | BY | ‘00000D00’H, |
| REPLACE | getrequest | BY | MACRMTState_Req |

| ASN.1 PDU Constraint Declaration | | | |
|---|---|---|---|
| **Constraint Name** : PMFGetReq_MDAF | | | |
| **PDU Type** : PMF_Frame1 | | | |
| **Derivation Path** : PMFGetReq | | | |
| **Comments** : Get request MACDA_Flag. | | | |
| **Constraint Value** | | | |
| REPLACE | Transaction_ID | BY | ‘00000D10’H, |
| REPLACE | getrequest | BY | MACDA_Flag_Req |

| ASN.1 PDU Constraint Declaration | | | |
|---|---|---|---|
| **Constraint Name** : PMFGetReq_MUNDAF1 | | | |
| **PDU Type** : PMF_Frame1 | | | |
| **Derivation Path** : PMFGetReq | | | |
| **Comments** : Get request MACUNDA_Flag. | | | |
| **Constraint Value** | | | |
| REPLACE | Transaction_ID | BY | ‘00000D20’H, |
| REPLACE | getrequest | BY | MACUNDA_Flag_Req |


Copyright International Organization for Standardization
Provided by IHS under license with ISO
No reproduction or networking permitted without license from IHS
Not for Resale

| ASN.1 PDU Constraint Declaration | | | |
|---|---|---|---|
| **Constraint Name** : PMFGetReq_MUNDAF2 | | | |
| **PDU Type** : PMF_Frame1 | | | |
| **Derivation Path** : PMFGetReq | | | |
| **Comments** : Get request MACUNDA_Flag. | | | |
| **Constraint Value** | | | |
| REPLACE | Transaction_ID | BY | ‘00000D24’H, |
| REPLACE | getrequest | BY | MACUNDA_Flag_Req |

| ASN.1 PDU Constraint Declaration | | | |
|---|---|---|---|
| **Constraint Name** : PMFGetReq_MFEF | | | |
| **PDU Type** : PMF_Frame1 | | | |
| **Derivation Path** : PMFGetReq | | | |
| **Comments** : Get request MACFrameErrorFlag. | | | |
| **Constraint Value** | | | |
| REPLACE | Transaction_ID | BY | ‘00000D30’H, |
| REPLACE | getrequest | BY | MACFrameErrorFlag_Req |

| ASN.1 PDU Constraint Declaration | | | |
|---|---|---|---|
| **Constraint Name** : PMFGetReq_MAUA | | | |
| **PDU Type** : PMF_Frame1 | | | |
| **Derivation Path** : PMFGetReq | | | |
| **Comments** : Get request MACMA_UnitdataAvailable. | | | |
| **Constraint Value** | | | |
| REPLACE | Transaction_ID | BY | ‘00000D50’H, |
| REPLACE | getrequest | BY | MACMA_UnitdataAvailable_Req |

| ASN.1 PDU Constraint Declaration | | | |
|---|---|---|---|
| **Constraint Name** : PMFGetReq_MHP | | | |
| **PDU Type** : PMF_Frame1 | | | |
| **Derivation Path** : PMFGetReq | | | |
| **Comments** : Get request MACHardwarePresent. | | | |
| **Constraint Value** | | | |
| REPLACE | Transaction_ID | BY | ‘00000D60’H, |
| REPLACE | getrequest | BY | MACHardwarePresent_Req |

| ASN.1 PDU Constraint Declaration | | | |
|---|---|---|---|
| **Constraint Name** : PMFGetReq_MAUE | | | |
| **PDU Type** : PMF_Frame1 | | | |
| **Derivation Path** : PMFGetReq | | | |
| **Comments** : Get request MACMA_UnitdataEnable. | | | |
| **Constraint Value** | | | |
| REPLACE | Transaction_ID | BY | ‘00000D70’H, |
| REPLACE | getrequest | BY | MACMA_UnitdataEnable_Req |



Copyright International Organization for Standardization
Provided by IHS under license with ISO
No reproduction or networking permitted without license from IHS
Not for Resale

| ASN.1 PDU Constraint Declaration | | | |
|---|---|---|---|
| **Constraint Name** : PMFGetReq_PI<br>**PDU Type** : PMF_Frame1<br>**Derivation Path** : PMFGetReq<br>**Comments** : Get request PATHIndex. | | | |
| **Constraint Value** | | | |
| REPLACE | Transaction_ID | BY | ‘00000F00’H, |
| REPLACE | getrequest | BY | PATHIndex_Req |

| ASN.1 PDU Constraint Declaration | | | |
|---|---|---|---|
| **Constraint Name** : PMFGetReq_PRL<br>**PDU Type** : PMF_Frame1<br>**Derivation Path** : PMFGetReq<br>**Comments** : Get request PATHRingLatency. | | | |
| **Constraint Value** | | | |
| REPLACE | Transaction_ID | BY | ‘00000F10’H, |
| REPLACE | getrequest | BY | PATHRingLatency_Req |

| ASN.1 PDU Constraint Declaration | | | |
|---|---|---|---|
| **Constraint Name** : PMFGetReq_PTR1<br>**PDU Type** : PMF_Frame1<br>**Derivation Path** : PMFGetReq<br>**Comments** : Get request PATHT_Rmode. | | | |
| **Constraint Value** | | | |
| REPLACE | Transaction_ID | BY | ‘00000F60’H, |
| REPLACE | getrequest | BY | PATHT_Rmode_Req |

| ASN.1 PDU Constraint Declaration | | | |
|---|---|---|---|
| **Constraint Name** : PMFGetReq_PTR2<br>**PDU Type** : PMF_Frame1<br>**Derivation Path** : PMFGetReq<br>**Comments** : Get request PATHT_Rmode. | | | |
| **Constraint Value** | | | |
| REPLACE | Transaction_ID | BY | ‘00000F64’H, |
| REPLACE | getrequest | BY | PATHT_Rmode_Req |


Copyright International Organization for Standardization
Provided by IHS under license with ISO
No reproduction or networking permitted without license from IHS
Not for Resale

| ASN.1 PDU Constraint Declaration | | | |
|---|---|---|---|
| **Constraint Name** : PMFGetReq_PTLB | | | |
| **PDU Type** : PMF_Frame1 | | | |
| **Derivation Path** : PMFGetReq | | | |
| **Comments** : Get request PATHTVXLowerBound. | | | |
| **Constraint Value** | | | |
| REPLACE | Transaction_ID | BY | ‘00000F80’H, |
| REPLACE | getrequest | BY | PATHTVXLowerBound_Req |

| ASN.1 PDU Constraint Declaration | | | |
|---|---|---|---|
| **Constraint Name** : PMFGetReq_PTMLB | | | |
| **PDU Type** : PMF_Frame1 | | | |
| **Derivation Path** : PMFGetReq | | | |
| **Comments** : Get request PATHT_MaxLowerBound. | | | |
| **Constraint Value** | | | |
| REPLACE | Transaction_ID | BY | ‘00000F90’H, |
| REPLACE | getrequest | BY | PATHT_MaxLowerBound_Req |

| ASN.1 PDU Constraint Declaration | | | |
|---|---|---|---|
| **Constraint Name** : PMFGetReq_PMTR | | | |
| **PDU Type** : PMF_Frame1 | | | |
| **Derivation Path** : PMFGetReq | | | |
| **Comments** : Get request PATHMaxT_Req. | | | |
| **Constraint Value** | | | |
| REPLACE | Transaction_ID | BY | ‘00000FA0’H, |
| REPLACE | getrequest | BY | PATHMaxT_Req_Req |

| ASN.1 PDU Constraint Declaration | | | |
|---|---|---|---|
| **Constraint Name** : PMFGetReq_PMT | | | |
| **PDU Type** : PMF_Frame1 | | | |
| **Derivation Path** : PMFGetReq | | | |
| **Comments** : Get request PORTMyType. | | | |
| **Constraint Value** | | | |
| REPLACE | Transaction_ID | BY | ‘00001000’H, |
| REPLACE | getrequest | BY | PORTMyType_Req |



Copyright International Organization for Standardization
Provided by IHS under license with ISO
No reproduction or networking permitted without license from IHS
Not for Resale

| ASN.1 PDU Constraint Declaration | | | |
|---|---|---|---|
| **Constraint Name** : PMFGetReq_PNT<br>**PDU Type** : PMF_Frame1<br>**Derivation Path** : PMFGetReq<br>**Comments** : Get request PORTNeighborType. | | | |
| **Constraint Value** | | | |
| REPLACE | Transaction_ID | BY | ‘00001010’H, |
| REPLACE | getrequest | BY | PORTNeighborType_Req |

| ASN.1 PDU Constraint Declaration | | | |
|---|---|---|---|
| **Constraint Name** : PMFGetReq_PCP<br>**PDU Type** : PMF_Frame1<br>**Derivation Path** : PMFGetReq<br>**Comments** : Get request PORTCurrentPath. | | | |
| **Constraint Value** | | | |
| REPLACE | Transaction_ID | BY | ‘00001040’H, |
| REPLACE | getrequest | BY | PORTCurrentPath_Req |

| ASN.1 PDU Constraint Declaration | | | |
|---|---|---|---|
| **Constraint Name** : PMFGetReq_PRPA<br>**PDU Type** : PMF_Frame1<br>**Derivation Path** : PMFGetReq<br>**Comments** : Get request PORTRequestedPaths. | | | |
| **Constraint Value** | | | |
| REPLACE | Transaction_ID | BY | ‘00001050’H, |
| REPLACE | getrequest | BY | PORTRequestedPaths_Req |

| ASN.1 PDU Constraint Declaration | | | |
|---|---|---|---|
| **Constraint Name** : PMFGetReq_PRPB1<br>**PDU Type** : PMF_Frame1<br>**Derivation Path** : PMFGetReq<br>**Comments** : Get request PORTRequestedPaths. | | | |
| **Constraint Value** | | | |
| REPLACE | Transaction_ID | BY | ‘00001052’H, |
| REPLACE | getrequest | BY | PORTRequestedPaths_Req |

| ASN.1 PDU Constraint Declaration | | | |
|---|---|---|---|
| **Constraint Name** : PMFGetReq_PRPB2<br>**PDU Type** : PMF_Frame1<br>**Derivation Path** : PMFGetReq<br>**Comments** : Get request PORTRequestedPaths. | | | |
| **Constraint Value** | | | |
| REPLACE | Transaction_ID | BY | ‘00001054’H, |
| REPLACE | getrequest | BY | PORTRequestedPaths_Req |



--`,,```,,,,````-`-`,,`,,`,`,,`---
Copyright International Organization for Standardization
Provided by IHS under license with ISO
No reproduction or networking permitted without license from IHS
Not for Resale

| ASN.1 PDU Constraint Declaration | | | |
|---|---|---|---|
| **Constraint Name** : PMFGetReq_PRPS<br>**PDU Type** : PMF_Frame1<br>**Derivation Path** : PMFGetReq<br>**Comments** : Get request PORTRequestedPaths. | | | |
| **Constraint Value** | | | |
| REPLACE | Transaction_ID | BY | ‘00001056’H, |
| REPLACE | getrequest | BY | PORTRequestedPaths_Req |

| ASN.1 PDU Constraint Declaration | | | |
|---|---|---|---|
| **Constraint Name** : PMFGetReq_PRPM<br>**PDU Type** : PMF_Frame1<br>**Derivation Path** : PMFGetReq<br>**Comments** : Get request PORTRequestedPaths. | | | |
| **Constraint Value** | | | |
| REPLACE | Transaction_ID | BY | ‘00001058’H, |
| REPLACE | getrequest | BY | PORTRequestedPaths_Req |

| ASN.1 PDU Constraint Declaration | | | |
|---|---|---|---|
| **Constraint Name** : PMFGetReq_PMP<br>**PDU Type** : PMF_Frame1<br>**Derivation Path** : PMFGetReq<br>**Comments** : Get request PORTMACPlacement. | | | |
| **Constraint Value** | | | |
| REPLACE | Transaction_ID | BY | ‘00001060’H, |
| REPLACE | getrequest | BY | PORTMACPlacement_Req |

| ASN.1 PDU Constraint Declaration | | | |
|---|---|---|---|
| **Constraint Name** : PMFGetReq_PAP<br>**PDU Type** : PMF_Frame1<br>**Derivation Path** : PMFGetReq<br>**Comments** : Get request PORTAvailablePaths. | | | |
| **Constraint Value** | | | |
| REPLACE | Transaction_ID | BY | ‘00001070’H, |
| REPLACE | getrequest | BY | PORTAvailablePaths_Req |



Copyright International Organization for Standardization
Provided by IHS under license with ISO
No reproduction or networking permitted without license from IHS
Not for Resale

| ASN.1 PDU Constraint Declaration | | | |
|---|---|---|---|
| **Constraint Name** : PMFGetReq_PMLT1 | | | |
| **PDU Type** : PMF_Frame1 | | | |
| **Derivation Path** : PMFGetReq | | | |
| **Comments** : Get request PORTMACLoop_Time. | | | |
| **Constraint Value** | | | |
| REPLACE | Transaction_ID | BY | ‘00001080’H, |
| REPLACE | getrequest | BY | PORTMACLoop_Time_Req |

| ASN.1 PDU Constraint Declaration | | | |
|---|---|---|---|
| **Constraint Name** : PMFGetReq_PMLT2 | | | |
| **PDU Type** : PMF_Frame1 | | | |
| **Derivation Path** : PMFGetReq | | | |
| **Comments** : Get request PORTMACLoop_Time. | | | |
| **Constraint Value** | | | |
| REPLACE | Transaction_ID | BY | ‘00001084’H, |
| REPLACE | getrequest | BY | PORTMACLoop_Time_Req |

| ASN.1 PDU Constraint Declaration | | | |
|---|---|---|---|
| **Constraint Name** : PMFGetReq_PPC | | | |
| **PDU Type** : PMF_Frame1 | | | |
| **Derivation Path** : PMFGetReq | | | |
| **Comments** : Get request PORTPMDClass. | | | |
| **Constraint Value** | | | |
| REPLACE | Transaction_ID | BY | ‘00001090’H, |
| REPLACE | getrequest | BY | PORTPMDClass_Req |

| ASN.1 PDU Constraint Declaration | | | |
|---|---|---|---|
| **Constraint Name** : PMFGetReq_PRTI | | | |
| **PDU Type** : PMF_Frame1 | | | |
| **Derivation Path** : PMFGetReq | | | |
| **Comments** : Get request PORTIndex. | | | |
| **Constraint Value** | | | |
| REPLACE | Transaction_ID | BY | ‘000010B0’H, |
| REPLACE | getrequest | BY | PORTIndex_Req |


Copyright International Organization for Standardization
Provided by IHS under license with ISO
No reproduction or networking permitted without license from IHS
Not for Resale

| ASN.1 PDU Constraint Declaration | | | |
|---|---|---|---|
| **Constraint Name** : PMFGetReq_PPL<br>**PDU Type** : PMF_Frame1<br>**Derivation Path** : PMFGetReq<br>**Comments** : Get request PORTPC_LS. | | | |
| **Constraint Value** | | | |
| REPLACE | Transaction_ID | BY | ‘000010E0’H, |
| REPLACE | getrequest | BY | PORTPC_LS_Req |

| ASN.1 PDU Constraint Declaration | | | |
|---|---|---|---|
| **Constraint Name** : PMFGetReq_PLC<br>**PDU Type** : PMF_Frame1<br>**Derivation Path** : PMFGetReq<br>**Comments** : Get request PORTLer_Cutoff. | | | |
| **Constraint Value** | | | |
| REPLACE | Transaction_ID | BY | ‘00001140’H, |
| REPLACE | getrequest | BY | PORTLer_Cutoff_Req |

| ASN.1 PDU Constraint Declaration | | | |
|---|---|---|---|
| **Constraint Name** : PMFGetReq_PLA<br>**PDU Type** : PMF_Frame1<br>**Derivation Path** : PMFGetReq<br>**Comments** : Get request PORTLer_Alarm. | | | |
| **Constraint Value** | | | |
| REPLACE | Transaction_ID | BY | ‘00001150’H, |
| REPLACE | getrequest | BY | PORTLer_Alarm_Req |

| ASN.1 PDU Constraint Declaration | | | |
|---|---|---|---|
| **Constraint Name** : PMFGetReq_PCS<br>**PDU Type** : PMF_Frame1<br>**Derivation Path** : PMFGetReq<br>**Comments** : Get request PORTConnectState. | | | |
| **Constraint Value** | | | |
| REPLACE | Transaction_ID | BY | ‘00001160’H, |
| REPLACE | getrequest | BY | PORTConnectState_Req |



Copyright International Organization for Standardization
Provided by IHS under license with ISO
No reproduction or networking permitted without license from IHS
Not for Resale

| ASN.1 PDU Constraint Declaration | | | |
|---|---|---|---|
| **Constraint Name** : PMFGetReq_PPS | | | |
| **PDU Type** : PMF_Frame1 | | | |
| **Derivation Path** : PMFGetReq | | | |
| **Comments** : Get request PORTPCMState. | | | |
| **Constraint Value** | | | |
| REPLACE | Transaction_ID | BY | ‘00001170’H, |
| REPLACE | getrequest | BY | PORTPCMState_Req |

| ASN.1 PDU Constraint Declaration | | | |
|---|---|---|---|
| **Constraint Name** : PMFGetReq_PPW | | | |
| **PDU Type** : PMF_Frame1 | | | |
| **Derivation Path** : PMFGetReq | | | |
| **Comments** : Get request PORTPC_Withhold. | | | |
| **Constraint Value** | | | |
| REPLACE | Transaction_ID | BY | ‘00001180’H, |
| REPLACE | getrequest | BY | PORTPC_Withhold_Req |

| ASN.1 PDU Constraint Declaration | | | |
|---|---|---|---|
| **Constraint Name** : PMFGetReq_PHP | | | |
| **PDU Type** : PMF_Frame1 | | | |
| **Derivation Path** : PMFGetReq | | | |
| **Comments** : Get request PORTHardwarePresent. | | | |
| **Constraint Value** | | | |
| REPLACE | Transaction_ID | BY | ‘000011A0’H, |
| REPLACE | getrequest | BY | PORTHardwarePresnt_Req |


--`,,```,,,,````-`-`,,`,,`,`,,`---
Copyright International Organization for Standardization
Provided by IHS under license with ISO
No reproduction or networking permitted without license from IHS
Not for Resale

| ASN.1 PDU Constraint Declaration | |
|---|---|
| **Constraint Name** | : PMFGetResp |
| **PDU Type** | : PMF_Frame2 |
| **Derivation Path** | : |
| **Comments** | : PMF get response. |

**Constraint Value**

```
{       SD                      JK,
        FC                      '41'H,
        DA                      TESTER_ADDRESS,
        SA                      IUT_ADDRESS,
        Frame_Class             '08'H,
        Frame_Type              '03'H,    --response--
        Version_ID              '0002'H,
        Transaction_ID          ?,
        Station_ID1             '0000'H,
        Station_ID2             IUT_ADDRESS,
        PAD                     PAD_2,
        InfoField_Length        ?,
        getresponse             PMFResponse_Base,
        FCS                     ?,
        ED                      T,
        FS_E                    RESET,
        FS_A                    RESET,
        FS_C                    RESET,
        FS_2                    OMIT,
        FS_T                    T       }
```

| ASN.1 PDU Constraint Declaration | |
|---|---|
| **Constraint Name** | : PMFGetResp_MIBGrp |
| **PDU Type** | : PMF_Frame2 |
| **Derivation Path** | : PMFGetResp |
| **Comments** | : Get response any MIB attribute group. |

**Constraint Value**

```
REPLACE     Transaction_ID      BY      '00000100'H,
REPLACE     getresponse         BY      PMFResponse_MIBGrp
```

| ASN.1 PDU Constraint Declaration | |
|---|---|
| **Constraint Name** | : PMFGetResp_SI |
| **PDU Type** | : PMF_Frame2 |
| **Derivation Path** | : PMFGetResp |
| **Comments** | : Get response SMTStationId. |

**Constraint Value**

```
REPLACE     Transaction_ID      BY      '00000110'H,
REPLACE     getresponse         BY      PMFResponse_SI
```

--`,,```,,,,````-`-`,,`,,`,`,,`---



Copyright International Organization for Standardization
Provided by IHS under license with ISO
No reproduction or networking permitted without license from IHS
Not for Resale

| ASN.1 PDU Constraint Declaration | | | |
|---|---|---|---|
| **Constraint Name** : PMFGetResp_SMD | | | |
| **PDU Type** : PMF_Frame2 | | | |
| **Derivation Path** : PMFGetResp | | | |
| **Comments** : Get response SMTManufacturerData. | | | |
| **Constraint Value** | | | |
| REPLACE | Transaction_ID | BY | ‘00000120’H, |
| REPLACE | getresponse | BY | PMFResponse_SMD |

| ASN.1 PDU Constraint Declaration | | | |
|---|---|---|---|
| **Constraint Name** : PMFGetResp_SUD | | | |
| **PDU Type** : PMF_Frame2 | | | |
| **Derivation Path** : PMFGetResp | | | |
| **Comments** : Get response SMTUserData. | | | |
| **Constraint Value** | | | |
| REPLACE | Transaction_ID | BY | ‘00000130’H, |
| REPLACE | getresponse | BY | PMFResponse_SUD1 |

| ASN.1 PDU Constraint Declaration | | | |
|---|---|---|---|
| **Constraint Name** : PMFGetResp_SMVI | | | |
| **PDU Type** : PMF_Frame2 | | | |
| **Derivation Path** : PMFGetResp | | | |
| **Comments** : Get response SMTMIBVersionId. | | | |
| **Constraint Value** | | | |
| REPLACE | Transaction_ID | BY | ‘00000140’H, |
| REPLACE | getresponse | BY | PMFResponse_SMVI |

| ASN.1 PDU Constraint Declaration | | | |
|---|---|---|---|
| **Constraint Name** : PMFGetResp_MacCt | | | |
| **PDU Type** : PMF_Frame2 | | | |
| **Derivation Path** : PMFGetResp | | | |
| **Comments** : Get response SMTMacCt. | | | |
| **Constraint Value** | | | |
| REPLACE | Transaction_ID | BY | ‘00000200’H, |
| REPLACE | getresponse | BY | PMFResponse_MacCt |

| ASN.1 PDU Constraint Declaration | | | |
|---|---|---|---|
| **Constraint Name** : PMFGetResp_NonMasterCt | | | |
| **PDU Type** : PMF_Frame2 | | | |
| **Derivation Path** : PMFGetResp | | | |
| **Comments** : Get response SMTNonMasterCt. | | | |
| **Constraint Value** | | | |
| REPLACE | Transaction_ID | BY | ‘00000210’H, |
| REPLACE | getresponse | BY | PMFResponse_NonMasterCt |


Copyright International Organization for Standardization
Provided by IHS under license with ISO
No reproduction or networking permitted without license from IHS
Not for Resale

| ASN.1 PDU Constraint Declaration | | | |
|---|---|---|---|
| **Constraint Name** : PMFGetResp_MasterCt | | | |
| **PDU Type** : PMF_Frame2 | | | |
| **Derivation Path** : PMFGetResp | | | |
| **Comments** : Get response SMTMasterCt. | | | |
| **Constraint Value** | | | |
| REPLACE | Transaction_ID | BY | ‘00000220’H, |
| REPLACE | getresponse | BY | PMFResponse_MasterCt |

| ASN.1 PDU Constraint Declaration | | | |
|---|---|---|---|
| **Constraint Name** : PMFGetResp_SAP | | | |
| **PDU Type** : PMF_Frame2 | | | |
| **Derivation Path** : PMFGetResp | | | |
| **Comments** : Get response SMTAvailablePaths. | | | |
| **Constraint Value** | | | |
| REPLACE | Transaction_ID | BY | ‘00000230’H, |
| REPLACE | getresponse | BY | PMFResponse_SAP |

| ASN.1 PDU Constraint Declaration | | | |
|---|---|---|---|
| **Constraint Name** : PMFGetResp_SCC | | | |
| **PDU Type** : PMF_Frame2 | | | |
| **Derivation Path** : PMFGetResp | | | |
| **Comments** : Get response SMTConfigCapabilities. | | | |
| **Constraint Value** | | | |
| REPLACE | Transaction_ID | BY | ‘00000240’H, |
| REPLACE | getresponse | BY | PMFResponse_SCC |

| ASN.1 PDU Constraint Declaration | | | |
|---|---|---|---|
| **Constraint Name** : PMFGetResp_SCC1 | | | |
| **PDU Type** : PMF_Frame2 | | | |
| **Derivation Path** : PMFGetResp | | | |
| **Comments** : Get response SMTConfigCapabilities. | | | |
| **Constraint Value** | | | |
| REPLACE | Transaction_ID | BY | ‘00000241’H, |
| REPLACE | getresponse | BY | PMFResponse_SCC1 |



Copyright International Organization for Standardization
Provided by IHS under license with ISO
No reproduction or networking permitted without license from IHS
Not for Resale

| ASN.1 PDU Constraint Declaration | | | |
|---|---|---|---|
| **Constraint Name** : PMFGetResp_SCC2 | | | |
| **PDU Type** : PMF_Frame2 | | | |
| **Derivation Path** : PMFGetResp | | | |
| **Comments** : Get response SMTConfigCapabilities. | | | |
| **Constraint Value** | | | |
| REPLACE | Transaction_ID | BY | ‘00000242’H, |
| REPLACE | getresponse | BY | PMFResponse_SCC2 |

| ASN.1 PDU Constraint Declaration | | | |
|---|---|---|---|
| **Constraint Name** : PMFGetResp_SCP | | | |
| **PDU Type** : PMF_Frame2 | | | |
| **Derivation Path** : PMFGetResp | | | |
| **Comments** : Get response SMTConnectionPolicy. | | | |
| **Constraint Value** | | | |
| REPLACE | Transaction_ID | BY | ‘00000260’H, |
| REPLACE | getresponse | BY | PMFResponse_SCP1 |

| ASN.1 PDU Constraint Declaration | | | |
|---|---|---|---|
| **Constraint Name** : PMFGetResp_TN | | | |
| **PDU Type** : PMF_Frame2 | | | |
| **Derivation Path** : PMFGetResp | | | |
| **Comments** : Get response SMTT_Notify. | | | |
| **Constraint Value** | | | |
| REPLACE | Transaction_ID | BY | ‘00000270’H, |
| REPLACE | getresponse | BY | PMFResponse_TN1 |

| ASN.1 PDU Constraint Declaration | | | |
|---|---|---|---|
| **Constraint Name** : PMFGetResp_SRP | | | |
| **PDU Type** : PMF_Frame2 | | | |
| **Derivation Path** : PMFGetResp | | | |
| **Comments** : Get response SMTStatRptPolicy. | | | |
| **Constraint Value** | | | |
| REPLACE | Transaction_ID | BY | ‘00000280’H, |
| REPLACE | getresponse | BY | PMFResponse_SRP1 |


Copyright International Organization for Standardization
Provided by IHS under license with ISO
No reproduction or networking permitted without license from IHS
Not for Resale

| ASN.1 PDU Constraint Declaration | | | |
|---|---|---|---|
| **Constraint Name** : PMFGetResp_TME | | | |
| **PDU Type** : PMF_Frame2 | | | |
| **Derivation Path** : PMFGetResp | | | |
| **Comments** : Get response SMTTrace_MaxExpiration. | | | |
| **Constraint Value** | | | |
| REPLACE | Transaction_ID | BY | ‘00000290’H, |
| REPLACE | getresponse | BY | PMFResponse_TME1 |

| ASN.1 PDU Constraint Declaration | | | |
|---|---|---|---|
| **Constraint Name** : PMFGetResp_Thru1 | | | |
| **PDU Type** : PMF_Frame2 | | | |
| **Derivation Path** : PMFGetResp | | | |
| **Comments** : Get response SMTCF_State. | | | |
| **Constraint Value** | | | |
| REPLACE | Transaction_ID | BY | ‘00000310’H, |
| REPLACE | getresponse | BY | PMFResponse_Thru |

| ASN.1 PDU Constraint Declaration | | | |
|---|---|---|---|
| **Constraint Name** : PMFGetResp_Thru2 | | | |
| **PDU Type** : PMF_Frame2 | | | |
| **Derivation Path** : PMFGetResp | | | |
| **Comments** : Get response SMTCF_State. | | | |
| **Constraint Value** | | | |
| REPLACE | Transaction_ID | BY | ‘00000311’H, |
| REPLACE | getresponse | BY | PMFResponse_Thru |

| ASN.1 PDU Constraint Declaration | | | |
|---|---|---|---|
| **Constraint Name** : PMFGetResp_CWRPA | | | |
| **PDU Type** : PMF_Frame2 | | | |
| **Derivation Path** : PMFGetResp | | | |
| **Comments** : Get response SMTCF-State. | | | |
| **Constraint Value** | | | |
| REPLACE | Transaction_ID | BY | ‘00000312’H, |
| REPLACE | getresponse | BY | PMFResponse_CWRPA |



Copyright International Organization for Standardization
Provided by IHS under license with ISO
No reproduction or networking permitted without license from IHS
Not for Resale

| ASN.1 PDU Constraint Declaration | | | |
|---|---|---|---|
| **Constraint Name** : PMFGetResp_CWRPB | | | |
| **PDU Type** : PMF_Frame2 | | | |
| **Derivation Path** : PMFGetResp | | | |
| **Comments** : Get response SMTCF_State. | | | |
| **Constraint Value** | | | |
| REPLACE | Transaction_ID | BY | ‘00000313’H, |
| REPLACE | getresponse | BY | PMFResponse_CWRPB |

| ASN.1 PDU Constraint Declaration | | | |
|---|---|---|---|
| **Constraint Name** : PMFGetResp_WRPS | | | |
| **PDU Type** : PMF_Frame2 | | | |
| **Derivation Path** : PMFGetResp | | | |
| **Comments** : Get response SMTCF_State. | | | |
| **Constraint Value** | | | |
| REPLACE | Transaction_ID | BY | ‘00000314’H, |
| REPLACE | getresponse | BY | PMFResponse_WRPS |

| ASN.1 PDU Constraint Declaration | | | |
|---|---|---|---|
| **Constraint Name** : PMFGetResp_WRPAB | | | |
| **PDU Type** : PMF_Frame2 | | | |
| **Derivation Path** : PMFGetResp | | | |
| **Comments** : Get response SMTCF_State. | | | |
| **Constraint Value** | | | |
| REPLACE | Transaction_ID | BY | ‘00000315’H, |
| REPLACE | getresponse | BY | PMFResponse_WRPAB |

| ASN.1 PDU Constraint Declaration | | | |
|---|---|---|---|
| **Constraint Name** : PMFGetResp_WRPA | | | |
| **PDU Type** : PMF_Frame2 | | | |
| **Derivation Path** : PMFGetResp | | | |
| **Comments** : Get response SMTCF_State. | | | |
| **Constraint Value** | | | |
| REPLACE | Transaction_ID | BY | ‘00000316’H, |
| REPLACE | getresponse | BY | PMFResponse_WRPA |



--`,,```,,,,````-`-`,,`,,`,`,,`---
Copyright International Organization for Standardization
Provided by IHS under license with ISO
No reproduction or networking permitted without license from IHS
Not for Resale

| ASN.1 PDU Constraint Declaration | | | |
|---|---|---|---|
| **Constraint Name** : PMFGetResp_WRPB | | | |
| **PDU Type** : PMF_Frame2 | | | |
| **Derivation Path** : PMFGetResp | | | |
| **Comments** : Get response SMTCF_State. | | | |
| **Constraint Value** | | | |
| REPLACE | Transaction_ID | BY | ‘00000317’H, |
| REPLACE | getresponse | BY | PMFResponse_WRPB |

| ASN.1 PDU Constraint Declaration | | | |
|---|---|---|---|
| **Constraint Name** : PMFGetResp_HS1 | | | |
| **PDU Type** : PMF_Frame2 | | | |
| **Derivation Path** : PMFGetResp | | | |
| **Comments** : Get response SMTHoldState. | | | |
| **Constraint Value** | | | |
| REPLACE | Transaction_ID | BY | ‘00000320’H, |
| REPLACE | getresponse | BY | PMFResponse_HS1 |

| ASN.1 PDU Constraint Declaration | | | |
|---|---|---|---|
| **Constraint Name** : PMFGetResp_HS2 | | | |
| **PDU Type** : PMF_Frame2 | | | |
| **Derivation Path** : PMFGetResp | | | |
| **Comments** : Get response SMTHoldState. | | | |
| **Constraint Value** | | | |
| REPLACE | Transaction_ID | BY | ‘00000321’H, |
| REPLACE | getresponse | BY | PMFResponse_HS2 |

| ASN.1 PDU Constraint Declaration | | | |
|---|---|---|---|
| **Constraint Name** : PMFGetResp_HS3 | | | |
| **PDU Type** : PMF_Frame2 | | | |
| **Derivation Path** : PMFGetResp | | | |
| **Comments** : Get response SMTHoldState. | | | |
| **Constraint Value** | | | |
| REPLACE | Transaction_ID | BY | ‘00000322’H, |
| REPLACE | getresponse | BY | PMFResponse_HS3 |



Copyright International Organization for Standardization
Provided by IHS under license with ISO
No reproduction or networking permitted without license from IHS
Not for Resale

| ASN.1 PDU Constraint Declaration | | | |
|---|---|---|---|
| **Constraint Name** : PMFGetResp_SST | | | |
| **PDU Type** : PMF_Frame2 | | | |
| **Derivation Path** : PMFGetResp | | | |
| **Comments** : Get response SMTStationStatus. | | | |
| **Constraint Value** | | | |
| REPLACE | Transaction_ID | BY | ‘00000340’H, |
| REPLACE | getresponse | BY | PMFResponse_SST |

| ASN.1 PDU Constraint Declaration | | | |
|---|---|---|---|
| **Constraint Name** : PMFGetResp_SSS1 | | | |
| **PDU Type** : PMF_Frame2 | | | |
| **Derivation Path** : PMFGetResp | | | |
| **Comments** : Get response SMTStationStatus. | | | |
| **Constraint Value** | | | |
| REPLACE | Transaction_ID | BY | ‘00000341’H, |
| REPLACE | getresponse | BY | PMFResponse_SSS |

| ASN.1 PDU Constraint Declaration | | | |
|---|---|---|---|
| **Constraint Name** : PMFGetResp_SSS2 | | | |
| **PDU Type** : PMF_Frame2 | | | |
| **Derivation Path** : PMFGetResp | | | |
| **Comments** : Get response SMTStationStatus. | | | |
| **Constraint Value** | | | |
| REPLACE | Transaction_ID | BY | ‘00000342’H, |
| REPLACE | getresponse | BY | PMFResponse_SSS |

| ASN.1 PDU Constraint Declaration | | | |
|---|---|---|---|
| **Constraint Name** : PMFGetResp_SSC | | | |
| **PDU Type** : PMF_Frame2 | | | |
| **Derivation Path** : PMFGetResp | | | |
| **Comments** : Get response SMTStationStatus. | | | |
| **Constraint Value** | | | |
| REPLACE | Transaction_ID | BY | ‘00000343’H, |
| REPLACE | getresponse | BY | PMFResponse_SSC |

| ASN.1 PDU Constraint Declaration | | | |
|---|---|---|---|
| **Constraint Name** : PMFGetResp_PWF1 | | | |
| **PDU Type** : PMF_Frame2 | | | |
| **Derivation Path** : PMFGetResp | | | |
| **Comments** : Get response SMTPeerWrapFlag. | | | |
| **Constraint Value** | | | |
| REPLACE | Transaction_ID | BY | ‘00000350’H, |
| REPLACE | getresponse | BY | PMFResponse_PWFS |

--`,,```,,,,````-`-`,,`,,`,`,,`---



Copyright International Organization for Standardization
Provided by IHS under license with ISO
No reproduction or networking permitted without license from IHS
Not for Resale

| ASN.1 PDU Constraint Declaration | | | |
|---|---|---|---|
| **Constraint Name** : PMFGetResp_PWF2 | | | |
| **PDU Type** : PMF_Frame2 | | | |
| **Derivation Path** : PMFGetResp | | | |
| **Comments** : Get response SMTPeerWrapFlag. | | | |
| **Constraint Value** | | | |
| REPLACE | Transaction_ID | BY | ‘00000351’H, |
| REPLACE | getresponse | BY | PMFResponse_PWFC |

| ASN.1 PDU Constraint Declaration | | | |
|---|---|---|---|
| **Constraint Name** : PMFGetResp_PWF3 | | | |
| **PDU Type** : PMF_Frame2 | | | |
| **Derivation Path** : PMFGetResp | | | |
| **Comments** : Get response SMTPeerWrapFlag. | | | |
| **Constraint Value** | | | |
| REPLACE | Transaction_ID | BY | ‘00000352’H, |
| REPLACE | getresponse | BY | PMFResponse_PWFS |

| ASN.1 PDU Constraint Declaration | | | |
|---|---|---|---|
| **Constraint Name** : PMFGetResp_PWF4 | | | |
| **PDU Type** : PMF_Frame2 | | | |
| **Derivation Path** : PMFGetResp | | | |
| **Comments** : Get response SMTPeerWrapFlag. | | | |
| **Constraint Value** | | | |
| REPLACE | Transaction_ID | BY | ‘00000353’H, |
| REPLACE | getresponse | BY | PMFResponse_PWFC |

| ASN.1 PDU Constraint Declaration | | | |
|---|---|---|---|
| **Constraint Name** : PMFGetResp_MBF | | | |
| **PDU Type** : PMF_Frame2 | | | |
| **Derivation Path** : PMFGetResp | | | |
| **Comments** : Get response MACBridgeFunctions. | | | |
| **Constraint Value** | | | |
| REPLACE | Transaction_ID | BY | ‘00000620’H, |
| REPLACE | getresponse | BY | PMFResponse_MBF |

| ASN.1 PDU Constraint Declaration | | | |
|---|---|---|---|
| **Constraint Name** : PMFGetResp_TMC | | | |
| **PDU Type** : PMF_Frame2 | | | |
| **Derivation Path** : PMFGetResp | | | |
| **Comments** : Get response MACT_MaxCapability. | | | |
| **Constraint Value** | | | |
| REPLACE | Transaction_ID | BY | ‘00000630’H, |
| REPLACE | getresponse | BY | PMFResponse_TMC |



Copyright International Organization for Standardization
Provided by IHS under license with ISO
No reproduction or networking permitted without license from IHS
Not for Resale

| ASN.1 PDU Constraint Declaration | | | |
|---|---|---|---|
| **Constraint Name** : PMFGetResp_TVXC | | | |
| **PDU Type** : PMF_Frame2 | | | |
| **Derivation Path** : PMFGetResp | | | |
| **Comments** : Get response MACTVXCapability. | | | |
| **Constraint Value** | | | |
| REPLACE | Transaction_ID | BY | ‘00000640’H, |
| REPLACE | getresponse | BY | PMFResponse_TVXC |

| ASN.1 PDU Constraint Declaration | | | |
|---|---|---|---|
| **Constraint Name** : PMFGetResp_MAP | | | |
| **PDU Type** : PMF_Frame2 | | | |
| **Derivation Path** : PMFGetResp | | | |
| **Comments** : Get response MACAvailablePaths. | | | |
| **Constraint Value** | | | |
| REPLACE | Transaction_ID | BY | ‘00000700’H, |
| REPLACE | getresponse | BY | PMFResponse_MAP |

| ASN.1 PDU Constraint Declaration | | | |
|---|---|---|---|
| **Constraint Name** : PMFGetResp_MCP | | | |
| **PDU Type** : PMF_Frame2 | | | |
| **Derivation Path** : PMFGetResp | | | |
| **Comments** : Get response MACCurrentPath. | | | |
| **Constraint Value** | | | |
| REPLACE | Transaction_ID | BY | ‘00000710’H, |
| REPLACE | getresponse | BY | PMFResponse_MCP |

| ASN.1 PDU Constraint Declaration | | | |
|---|---|---|---|
| **Constraint Name** : PMFGetResp_UNA | | | |
| **PDU Type** : PMF_Frame2 | | | |
| **Derivation Path** : PMFGetResp | | | |
| **Comments** : Get response MACUpstreamNbr. | | | |
| **Constraint Value** | | | |
| REPLACE | Transaction_ID | BY | ‘00000720’H, |
| REPLACE | getresponse | BY | PMFResponse_UNA |


Copyright International Organization for Standardization
Provided by IHS under license with ISO
No reproduction or networking permitted without license from IHS
Not for Resale

| ASN.1 PDU Constraint Declaration | | | |
|---|---|---|---|
| **Constraint Name** : PMFGetResp_UNK1 | | | |
| **PDU Type** : PMF_Frame2 | | | |
| **Derivation Path** : PMFGetResp_UNA | | | |
| **Comments** : Get response MACUpstreamNbr. | | | |
| **Constraint Value** | | | |
| REPLACE | getresponse | BY | PMFResponse_UNK1 |

| ASN.1 PDU Constraint Declaration | | | |
|---|---|---|---|
| **Constraint Name** : PMFGetResp_DNA | | | |
| **PDU Type** : PMF_Frame2 | | | |
| **Derivation Path** : PMFGetResp | | | |
| **Comments** : Get response MACDownstreamNbr. | | | |
| **Constraint Value** | | | |
| REPLACE | Transaction_ID | BY | ‘00000730’H, |
| REPLACE | getresponse | BY | PMFResponse_DNA |

| ASN.1 PDU Constraint Declaration | | | |
|---|---|---|---|
| **Constraint Name** : PMFGetResp_UNK2 | | | |
| **PDU Type** : PMF_Frame2 | | | |
| **Derivation Path** : PMFGetResp_DNA | | | |
| **Comments** : Get response MACDownstreamNbr. | | | |
| **Constraint Value** | | | |
| REPLACE | getresponse | BY | PMFResponse_UNK2 |

| ASN.1 PDU Constraint Declaration | | | |
|---|---|---|---|
| **Constraint Name** : PMFGetResp_OUNA | | | |
| **PDU Type** : PMF_Frame2 | | | |
| **Derivation Path** : PMFGetResp | | | |
| **Comments** : Get response MACOldUpstreamNbr. | | | |
| **Constraint Value** | | | |
| REPLACE | Transaction_ID | BY | ‘00000740’H, |
| REPLACE | getresponse | BY | PMFResponse_OUNA |

| ASN.1 PDU Constraint Declaration | | | |
|---|---|---|---|
| **Constraint Name** : PMFGetResp_ODNA | | | |
| **PDU Type** : PMF_Frame2 | | | |
| **Derivation Path** : PMFGetResp | | | |
| **Comments** : Get response MACOldDownstreamNbr. | | | |
| **Constraint Value** | | | |
| REPLACE | Transaction_ID | BY | ‘00000750’H, |
| REPLACE | getresponse | BY | PMFResponse_ODNA |

--`,,```,,,,````-`-`,,`,,`,`,,`---



Copyright International Organization for Standardization
Provided by IHS under license with ISO
No reproduction or networking permitted without license from IHS
Not for Resale

| ASN.1 PDU Constraint Declaration | | | |
|---|---|---|---|
| **Constraint Name** : PMFGetResp_MDAT1 | | | |
| **PDU Type** : PMF_Frame2 | | | |
| **Derivation Path** : PMFGetResp | | | |
| **Comments** : Get response MACDupAddressTest. | | | |
| **Constraint Value** | | | |
| REPLACE | Transaction_ID | BY | ‘00000760’H, |
| REPLACE | getresponse | BY | PMFResponse_MDAT1 |

| ASN.1 PDU Constraint Declaration | | | |
|---|---|---|---|
| **Constraint Name** : PMFGetResp_MDAT2 | | | |
| **PDU Type** : PMF_Frame2 | | | |
| **Derivation Path** : PMFGetResp | | | |
| **Comments** : Get response MACDupAddressTest. | | | |
| **Constraint Value** | | | |
| REPLACE | Transaction_ID | BY | ‘00000762’H, |
| REPLACE | getresponse | BY | PMFResponse_MDAT2 |

| ASN.1 PDU Constraint Declaration | | | |
|---|---|---|---|
| **Constraint Name** : PMFGetResp_MRP | | | |
| **PDU Type** : PMF_Frame2 | | | |
| **Derivation Path** : PMFGetResp | | | |
| **Comments** : Get response MACRequestedPaths. | | | |
| **Constraint Value** | | | |
| REPLACE | Transaction_ID | BY | ‘00000770’H, |
| REPLACE | getresponse | BY | PMFResponse_MRP1 |

| ASN.1 PDU Constraint Declaration | | | |
|---|---|---|---|
| **Constraint Name** : PMFGetResp_MDPT | | | |
| **PDU Type** : PMF_Frame2 | | | |
| **Derivation Path** : PMFGetResp | | | |
| **Comments** : Get response MACDownstreamPORTType. | | | |
| **Constraint Value** | | | |
| REPLACE | Transaction_ID | BY | ‘00000780’H, |
| REPLACE | getresponse | BY | PMFResponse_MDPT |

| ASN.1 PDU Constraint Declaration | | | |
|---|---|---|---|
| **Constraint Name** : PMFGetResp_MI0 | | | |
| **PDU Type** : PMF_Frame2 | | | |
| **Derivation Path** : PMFGetResp | | | |
| **Comments** : Get response MACIndex. | | | |
| **Constraint Value** | | | |
| REPLACE | Transaction_ID | BY | ‘00000790’H, |
| REPLACE | getresponse | BY | PMFResponse_MI0 |


Copyright International Organization for Standardization
Provided by IHS under license with ISO
No reproduction or networking permitted without license from IHS
Not for Resale

| ASN.1 PDU Constraint Declaration | | | |
|---|---|---|---|
| **Constraint Name** : PMFGetResp_MI1 | | | |
| **PDU Type** : PMF_Frame2 | | | |
| **Derivation Path** : PMFGetResp | | | |
| **Comments** : Get response MACIndex. | | | |
| **Constraint Value** | | | |
| REPLACE | Transaction_ID | BY | '00000792'H, |
| REPLACE | getresponse | BY | PMFResponse_MI1 |

| ASN.1 PDU Constraint Declaration | | | |
|---|---|---|---|
| **Constraint Name** : PMFGetResp_MSA | | | |
| **PDU Type** : PMF_Frame2 | | | |
| **Derivation Path** : PMFGetResp | | | |
| **Comments** : Get response MACSMTAddress. | | | |
| **Constraint Value** | | | |
| REPLACE | Transaction_ID | BY | '00000800'H, |
| REPLACE | getresponse | BY | PMFResponse_MSA |

| ASN.1 PDU Constraint Declaration | | | |
|---|---|---|---|
| **Constraint Name** : PMFGetResp_MLGA | | | |
| **PDU Type** : PMF_Frame2 | | | |
| **Derivation Path** : PMFGetResp | | | |
| **Comments** : Get response MACLongGrpAddress. | | | |
| **Constraint Value** | | | |
| REPLACE | Transaction_ID | BY | '00000810'H, |
| REPLACE | getresponse | BY | PMFResponse_MLGA |

| ASN.1 PDU Constraint Declaration | | | |
|---|---|---|---|
| **Constraint Name** : PMFGetResp_MSGA | | | |
| **PDU Type** : PMF_Frame2 | | | |
| **Derivation Path** : PMFGetResp | | | |
| **Comments** : Get response MACShortGrpAddress. | | | |
| **Constraint Value** | | | |
| REPLACE | Transaction_ID | BY | '00000820'H, |
| REPLACE | getresponse | BY | PMFResponse_MSGA |

| ASN.1 PDU Constraint Declaration | | | |
|---|---|---|---|
| **Constraint Name** : PMFGetResp_MT_Req | | | |
| **PDU Type** : PMF_Frame2 | | | |
| **Derivation Path** : PMFGetResp | | | |
| **Comments** : Get response MACT_Req. | | | |
| **Constraint Value** | | | |
| REPLACE | Transaction_ID | BY | '00000900'H, |
| REPLACE | getresponse | BY | PMFResponse_MT_Req |



Copyright International Organization for Standardization
Provided by IHS under license with ISO
No reproduction or networking permitted without license from IHS
Not for Resale

| ASN.1 PDU Constraint Declaration | | | |
|---|---|---|---|
| **Constraint Name** : PMFGetResp_MT_Neg<br>**PDU Type** : PMF_Frame2<br>**Derivation Path** : PMFGetResp<br>**Comments** : Get response MACT_Neg. | | | |
| **Constraint Value** | | | |
| REPLACE | Transaction_ID | BY | ‘00000910’H, |
| REPLACE | getresponse | BY | PMFResponse_MT_Neg |

| ASN.1 PDU Constraint Declaration | | | |
|---|---|---|---|
| **Constraint Name** : PMFGetResp_MT_Max<br>**PDU Type** : PMF_Frame2<br>**Derivation Path** : PMFGetResp<br>**Comments** : Get response MACT_Max. | | | |
| **Constraint Value** | | | |
| REPLACE | Transaction_ID | BY | ‘00000920’H, |
| REPLACE | getresponse | BY | PMFResponse_MT_Max |

| ASN.1 PDU Constraint Declaration | | | |
|---|---|---|---|
| **Constraint Name** : PMFGetResp_MTvx<br>**PDU Type** : PMF_Frame2<br>**Derivation Path** : PMFGetResp<br>**Comments** : Get response MACTvxValue. | | | |
| **Constraint Value** | | | |
| REPLACE | Transaction_ID | BY | ‘00000930’H, |
| REPLACE | getresponse | BY | PMFResponse_MTvx |

| ASN.1 PDU Constraint Declaration | | | |
|---|---|---|---|
| **Constraint Name** : PMFGetResp_MT_Pri0<br>**PDU Type** : PMF_Frame2<br>**Derivation Path** : PMFGetResp<br>**Comments** : Get response MACT_Pri0. | | | |
| **Constraint Value** | | | |
| REPLACE | Transaction_ID | BY | ‘00000940’H, |
| REPLACE | getresponse | BY | PMFResponse_MT_Pri0 |

| ASN.1 PDU Constraint Declaration | | | |
|---|---|---|---|
| **Constraint Name** : PMFGetResp_MT_Pri1<br>**PDU Type** : PMF_Frame2<br>**Derivation Path** : PMFGetResp<br>**Comments** : Get response MACT_Pri1. | | | |
| **Constraint Value** | | | |
| REPLACE | Transaction_ID | BY | ‘00000950’H, |
| REPLACE | getresponse | BY | PMFResponse_MT_Pri1 |

--`,,```,,,,````-`-`,,`,,`,`,,`---



Copyright International Organization for Standardization
Provided by IHS under license with ISO
No reproduction or networking permitted without license from IHS
Not for Resale

| ASN.1 PDU Constraint Declaration | | | |
|---|---|---|---|
| **Constraint Name** : PMFGetResp_MT_Pri2 | | | |
| **PDU Type** : PMF_Frame2 | | | |
| **Derivation Path** : PMFGetResp | | | |
| **Comments** : Get response MACT_Pri2. | | | |
| **Constraint Value** | | | |
| REPLACE | Transaction_ID | BY | ‘00000960’H, |
| REPLACE | getresponse | BY | PMFResponse_MT_Pri2 |

| ASN.1 PDU Constraint Declaration | | | |
|---|---|---|---|
| **Constraint Name** : PMFGetResp_MT_Pri3 | | | |
| **PDU Type** : PMF_Frame2 | | | |
| **Derivation Path** : PMFGetResp | | | |
| **Comments** : Get response MACT_Pri3. | | | |
| **Constraint Value** | | | |
| REPLACE | Transaction_ID | BY | ‘00000970’H, |
| REPLACE | getresponse | BY | PMFResponse_MT_Pri3 |

| ASN.1 PDU Constraint Declaration | | | |
|---|---|---|---|
| **Constraint Name** : PMFGetResp_MT_Pri4 | | | |
| **PDU Type** : PMF_Frame2 | | | |
| **Derivation Path** : PMFGetResp | | | |
| **Comments** : Get response MACT_Pri4. | | | |
| **Constraint Value** | | | |
| REPLACE | Transaction_ID | BY | ‘00000980’H, |
| REPLACE | getresponse | BY | PMFResponse_MT_Pri4 |

| ASN.1 PDU Constraint Declaration | | | |
|---|---|---|---|
| **Constraint Name** : PMFGetResp_MT_Pri5 | | | |
| **PDU Type** : PMF_Frame2 | | | |
| **Derivation Path** : PMFGetResp | | | |
| **Comments** : Get response MACT_Pri5. | | | |
| **Constraint Value** | | | |
| REPLACE | Transaction_ID | BY | ‘00000990’H, |
| REPLACE | getresponse | BY | PMFResponse_MT_Pri5 |



Copyright International Organization for Standardization
Provided by IHS under license with ISO
No reproduction or networking permitted without license from IHS
Not for Resale

| ASN.1 PDU Constraint Declaration | | | |
|---|---|---|---|
| **Constraint Name** : PMFGetResp_MT_Pri6 | | | |
| **PDU Type** : PMF_Frame2 | | | |
| **Derivation Path** : PMFGetResp | | | |
| **Comments** : Get response MACT_Pri6. | | | |
| **Constraint Value** | | | |
| REPLACE | Transaction_ID | BY | ‘000009A0’H, |
| REPLACE | getresponse | BY | PMFResponse_MT_Pri6 |

| ASN.1 PDU Constraint Declaration | | | |
|---|---|---|---|
| **Constraint Name** : PMFGetResp_MFC1 | | | |
| **PDU Type** : PMF_Frame2 | | | |
| **Derivation Path** : PMFGetResp | | | |
| **Comments** : Get response MACFrame_Ct. | | | |
| **Constraint Value** | | | |
| REPLACE | Transaction_ID | BY | ‘00000A00’H, |
| REPLACE | getresponse | BY | PMFResponse_MFC1 |

| ASN.1 PDU Constraint Declaration | | | |
|---|---|---|---|
| **Constraint Name** : PMFGetResp_MFC2 | | | |
| **PDU Type** : PMF_Frame2 | | | |
| **Derivation Path** : PMFGetResp | | | |
| **Comments** : Get response MACFrame_Ct. | | | |
| **Constraint Value** | | | |
| REPLACE | Transaction_ID | BY | ‘00000A02’H, |
| REPLACE | getresponse | BY | PMFResponse_MFC2 |

| ASN.1 PDU Constraint Declaration | | | |
|---|---|---|---|
| **Constraint Name** : PMFGetResp_MCC1 | | | |
| **PDU Type** : PMF_Frame2 | | | |
| **Derivation Path** : PMFGetResp | | | |
| **Comments** : Get response MACCopied_Ct. | | | |
| **Constraint Value** | | | |
| REPLACE | Transaction_ID | BY | ‘00000A10’H, |
| REPLACE | getresponse | BY | PMFResponse_MCC1 |

| ASN.1 PDU Constraint Declaration | | | |
|---|---|---|---|
| **Constraint Name** : PMFGetResp_MCC2 | | | |
| **PDU Type** : PMF_Frame2 | | | |
| **Derivation Path** : PMFGetResp | | | |
| **Comments** : Get response MACCopied_Ct. | | | |
| **Constraint Value** | | | |
| REPLACE | Transaction_ID | BY | ‘00000A12’H, |
| REPLACE | getresponse | BY | PMFResponse_MCC2 |



Copyright International Organization for Standardization
Provided by IHS under license with ISO
No reproduction or networking permitted without license from IHS
Not for Resale

| ASN.1 PDU Constraint Declaration | | | |
|---|---|---|---|
| **Constraint Name** : PMFGetResp_MTC1 | | | |
| **PDU Type** : PMF_Frame2 | | | |
| **Derivation Path** : PMFGetResp | | | |
| **Comments** : Get response MACTransmit_Ct. | | | |
| **Constraint Value** | | | |
| REPLACE | Transaction_ID | BY | ‘00000A20’H, |
| REPLACE | getresponse | BY | PMFResponse_MTC1 |

| ASN.1 PDU Constraint Declaration | | | |
|---|---|---|---|
| **Constraint Name** : PMFGetResp_MTC2 | | | |
| **PDU Type** : PMF_Frame2 | | | |
| **Derivation Path** : PMFGetResp | | | |
| **Comments** : Get response MACTransmit_Ct. | | | |
| **Constraint Value** | | | |
| REPLACE | Transaction_ID | BY | ‘00000A22’H, |
| REPLACE | getresponse | BY | PMFResponse_MTC2 |

| ASN.1 PDU Constraint Declaration | | | |
|---|---|---|---|
| **Constraint Name** : PMFGetResp_MTKC1 | | | |
| **PDU Type** : PMF_Frame2 | | | |
| **Derivation Path** : PMFGetResp | | | |
| **Comments** : Get response MACToken_Ct. | | | |
| **Constraint Value** | | | |
| REPLACE | Transaction_ID | BY | ‘00000A30’H, |
| REPLACE | getresponse | BY | PMFResponse_MTKC1 |

| ASN.1 PDU Constraint Declaration | | | |
|---|---|---|---|
| **Constraint Name** : PMFGetResp_MTKC2 | | | |
| **PDU Type** : PMF_Frame2 | | | |
| **Derivation Path** : PMFGetResp | | | |
| **Comments** : Get response MACToken_Ct. | | | |
| **Constraint Value** | | | |
| REPLACE | Transaction_ID | BY | ‘00000A32’H, |
| REPLACE | getresponse | BY | PMFResponse_MTKC2 |

| ASN.1 PDU Constraint Declaration | | | |
|---|---|---|---|
| **Constraint Name** : PMFGetResp_MEC1 | | | |
| **PDU Type** : PMF_Frame2 | | | |
| **Derivation Path** : PMFGetResp | | | |
| **Comments** : Get response MACError_Ct. | | | |
| **Constraint Value** | | | |
| REPLACE | Transaction_ID | BY | ‘00000A40’H, |
| REPLACE | getresponse | BY | PMFResponse_MEC1 |



Copyright International Organization for Standardization
Provided by IHS under license with ISO
No reproduction or networking permitted without license from IHS
Not for Resale

| ASN.1 PDU Constraint Declaration | | | |
|---|---|---|---|
| **Constraint Name** : PMFGetResp_MEC2 | | | |
| **PDU Type** : PMF_Frame2 | | | |
| **Derivation Path** : PMFGetResp | | | |
| **Comments** : Get response MACError_Ct. | | | |
| **Constraint Value** | | | |
| REPLACE | Transaction_ID | BY | ‘00000A42’H, |
| REPLACE | getresponse | BY | PMFResponse_MEC2 |

| ASN.1 PDU Constraint Declaration | | | |
|---|---|---|---|
| **Constraint Name** : PMFGetResp_MLC1 | | | |
| **PDU Type** : PMF_Frame2 | | | |
| **Derivation Path** : PMFGetResp | | | |
| **Comments** : Get response MACLost_Ct. | | | |
| **Constraint Value** | | | |
| REPLACE | Transaction_ID | BY | ‘00000A50’H, |
| REPLACE | getresponse | BY | PMFResponse_MLC1 |

| ASN.1 PDU Constraint Declaration | | | |
|---|---|---|---|
| **Constraint Name** : PMFGetResp_MLC2 | | | |
| **PDU Type** : PMF_Frame2 | | | |
| **Derivation Path** : PMFGetResp | | | |
| **Comments** : Get response MACLost_Ct. | | | |
| **Constraint Value** | | | |
| REPLACE | Transaction_ID | BY | ‘00000A52’H, |
| REPLACE | getresponse | BY | PMFResponse_MLC2 |

| ASN.1 PDU Constraint Declaration | | | |
|---|---|---|---|
| **Constraint Name** : PMFGetResp_MTEC1 | | | |
| **PDU Type** : PMF_Frame2 | | | |
| **Derivation Path** : PMFGetResp | | | |
| **Comments** : Get response MACTvxExpired_Ct. | | | |
| **Constraint Value** | | | |
| REPLACE | Transaction_ID | BY | ‘00000A60’H, |
| REPLACE | getresponse | BY | PMFResponse_MTEC1 |


Copyright International Organization for Standardization
Provided by IHS under license with ISO
No reproduction or networking permitted without license from IHS
Not for Resale

| ASN.1 PDU Constraint Declaration | | | |
|---|---|---|---|
| **Constraint Name** : PMFGetResp_MTEC2 | | | |
| **PDU Type** : PMF_Frame2 | | | |
| **Derivation Path** : PMFGetResp | | | |
| **Comments** : Get response MACTvxExpired_Ct. | | | |
| **Constraint Value** | | | |
| REPLACE | Transaction_ID | BY | ‘00000A62’H, |
| REPLACE | getresponse | BY | PMFResponse_MTEC2 |

| ASN.1 PDU Constraint Declaration | | | |
|---|---|---|---|
| **Constraint Name** : PMFGetResp_MLC1 | | | |
| **PDU Type** : PMF_Frame2 | | | |
| **Derivation Path** : PMFGetResp | | | |
| **Comments** : Get response MACLate_Ct. | | | |
| **Constraint Value** | | | |
| REPLACE | Transaction_ID | BY | ‘00000A80’H, |
| REPLACE | getresponse | BY | PMFResponse_MLC1 |

| ASN.1 PDU Constraint Declaration | | | |
|---|---|---|---|
| **Constraint Name** : PMFGetResp_MLC2 | | | |
| **PDU Type** : PMF_Frame2 | | | |
| **Derivation Path** : PMFGetResp | | | |
| **Comments** : Get response MACLate_Ct. | | | |
| **Constraint Value** | | | |
| REPLACE | Transaction_ID | BY | ‘00000A82’H, |
| REPLACE | getresponse | BY | PMFResponse_MLC2 |

| ASN.1 PDU Constraint Declaration | | | |
|---|---|---|---|
| **Constraint Name** : PMFGetResp_MRS | | | |
| **PDU Type** : PMF_Frame2 | | | |
| **Derivation Path** : PMFGetResp | | | |
| **Comments** : Get response MACRMTState. | | | |
| **Constraint Value** | | | |
| REPLACE | Transaction_ID | BY | ‘00000D00’H, |
| REPLACE | getresponse | BY | PMFResponse_MRS |



--`,,```,,,,````-`-`,,`,,`,`,,`---
Copyright International Organization for Standardization
Provided by IHS under license with ISO
No reproduction or networking permitted without license from IHS
Not for Resale

| ASN.1 PDU Constraint Declaration | | | |
|---|---|---|---|
| **Constraint Name** : PMFGetResp_MDAF | | | |
| **PDU Type** : PMF_Frame2 | | | |
| **Derivation Path** : PMFGetResp | | | |
| **Comments** : Get response MACDA_Flag. | | | |
| **Constraint Value** | | | |
| REPLACE | Transaction_ID | BY | ‘00000D10’H, |
| REPLACE | getresponse | BY | PMFResponse_MDAF |

| ASN.1 PDU Constraint Declaration | | | |
|---|---|---|---|
| **Constraint Name** : PMFGetResp_MUNDAF1 | | | |
| **PDU Type** : PMF_Frame2 | | | |
| **Derivation Path** : PMFGetResp | | | |
| **Comments** : Get response MACUNDA_Flag. | | | |
| **Constraint Value** | | | |
| REPLACE | Transaction_ID | BY | ‘00000D20’H, |
| REPLACE | getresponse | BY | PMFResponse_MUNDAF1 |

| ASN.1 PDU Constraint Declaration | | | |
|---|---|---|---|
| **Constraint Name** : PMFGetResp_MUNDAF2 | | | |
| **PDU Type** : PMF_Frame2 | | | |
| **Derivation Path** : PMFGetResp | | | |
| **Comments** : Get response MACUNDA_Flag. | | | |
| **Constraint Value** | | | |
| REPLACE | Transaction_ID | BY | ‘00000D24’H, |
| REPLACE | getresponse | BY | PMFResponse_MUNDAF2 |

| ASN.1 PDU Constraint Declaration | | | |
|---|---|---|---|
| **Constraint Name** : PMFGetResp_MFEF | | | |
| **PDU Type** : PMF_Frame2 | | | |
| **Derivation Path** : PMFGetResp | | | |
| **Comments** : Get response MACFrameErrorFlag. | | | |
| **Constraint Value** | | | |
| REPLACE | Transaction_ID | BY | ‘00000D30’H, |
| REPLACE | getresponse | BY | PMFResponse_MFEF |


Copyright International Organization for Standardization
Provided by IHS under license with ISO
No reproduction or networking permitted without license from IHS
Not for Resale

| ASN.1 PDU Constraint Declaration | | | |
|---|---|---|---|
| **Constraint Name** : PMFGetResp_MAUA<br>**PDU Type** : PMF_Frame2<br>**Derivation Path** : PMFGetResp<br>**Comments** : Get response MACMA_UnitdataAvailable. | | | |
| **Constraint Value** | | | |
| REPLACE | Transaction_ID | BY | ‘00000D50’H, |
| REPLACE | getresponse | BY | PMFResponse_MAUA |

| ASN.1 PDU Constraint Declaration | | | |
|---|---|---|---|
| **Constraint Name** : PMFGetResp_MHP<br>**PDU Type** : PMF_Frame2<br>**Derivation Path** : PMFGetResp<br>**Comments** : Get response MACHardwarePresent. | | | |
| **Constraint Value** | | | |
| REPLACE | Transaction_ID | BY | ‘00000D60’H, |
| REPLACE | getresponse | BY | PMFResponse_MHP |

| ASN.1 PDU Constraint Declaration | | | |
|---|---|---|---|
| **Constraint Name** : PMFGetResp_MAUE<br>**PDU Type** : PMF_Frame2<br>**Derivation Path** : PMFGetResp<br>**Comments** : Get response MACMA_UnitdataEnable. | | | |
| **Constraint Value** | | | |
| REPLACE | Transaction_ID | BY | ‘00000D70’H, |
| REPLACE | getresponse | BY | PMFResponse_MAUE |

| ASN.1 PDU Constraint Declaration | | | |
|---|---|---|---|
| **Constraint Name** : PMFGetResp_PI<br>**PDU Type** : PMF_Frame2<br>**Derivation Path** : PMFGetResp<br>**Comments** : Get response PATHIndex. | | | |
| **Constraint Value** | | | |
| REPLACE | Transaction_ID | BY | ‘00000F00’H, |
| REPLACE | getresponse | BY | PMFResponse_PI |

| ASN.1 PDU Constraint Declaration | | | |
|---|---|---|---|
| **Constraint Name** : PMFGetResp_PRL<br>**PDU Type** : PMF_Frame2<br>**Derivation Path** : PMFGetResp<br>**Comments** : Get response PATHRingLatency. | | | |
| **Constraint Value** | | | |
| REPLACE | Transaction_ID | BY | ‘00000F10’H, |
| REPLACE | getresponse | BY | PMFResponse_PRL |

--`,,```,,,,````-`-`,,`,,`,`,,`---



Copyright International Organization for Standardization
Provided by IHS under license with ISO
No reproduction or networking permitted without license from IHS
Not for Resale

| ASN.1 PDU Constraint Declaration | | | |
|---|---|---|---|
| **Constraint Name** : PMFGetResp_PTR1 | | | |
| **PDU Type** : PMF_Frame2 | | | |
| **Derivation Path** : PMFGetResp | | | |
| **Comments** : Get response PATHT_Rmode. | | | |
| **Constraint Value** | | | |
| REPLACE | Transaction_ID | BY | ‘00000F60’H, |
| REPLACE | getresponse | BY | PMFResponse_PTR1 |

| ASN.1 PDU Constraint Declaration | | | |
|---|---|---|---|
| **Constraint Name** : PMFGetResp_PTR2 | | | |
| **PDU Type** : PMF_Frame2 | | | |
| **Derivation Path** : PMFGetResp | | | |
| **Comments** : Get response PATHT_Rmode. | | | |
| **Constraint Value** | | | |
| REPLACE | Transaction_ID | BY | ‘00000F64’H, |
| REPLACE | getresponse | BY | PMFResponse_PTR3 |

| ASN.1 PDU Constraint Declaration | | | |
|---|---|---|---|
| **Constraint Name** : PMFGetResp_PTLB | | | |
| **PDU Type** : PMF_Frame2 | | | |
| **Derivation Path** : PMFGetResp | | | |
| **Comments** : Get response PATHTVXLowerBound. | | | |
| **Constraint Value** | | | |
| REPLACE | Transaction_ID | BY | ‘00000F80’H, |
| REPLACE | getresponse | BY | PMFResponse_PTLB |

| ASN.1 PDU Constraint Declaration | | | |
|---|---|---|---|
| **Constraint Name** : PMFGetResp_PTMLB | | | |
| **PDU Type** : PMF_Frame2 | | | |
| **Derivation Path** : PMFGetResp | | | |
| **Comments** : Get response PATHT_MaxLowerBound. | | | |
| **Constraint Value** | | | |
| REPLACE | Transaction_ID | BY | ‘00000F90’H, |
| REPLACE | getresponse | BY | PMFResponse_PTMLB |


Copyright International Organization for Standardization
Provided by IHS under license with ISO
No reproduction or networking permitted without license from IHS
Not for Resale

| ASN.1 PDU Constraint Declaration | | | |
|---|---|---|---|
| **Constraint Name** : PMFGetResp_PMTR | | | |
| **PDU Type** : PMF_Frame2 | | | |
| **Derivation Path** : PMFGetResp | | | |
| **Comments** : Get response PATHMaxT_Req. | | | |
| **Constraint Value** | | | |
| REPLACE | Transaction_ID | BY | ‘00000FA0’H, |
| REPLACE | getresponse | BY | PMFResponse_PMTR |

| ASN.1 PDU Constraint Declaration | | | |
|---|---|---|---|
| **Constraint Name** : PMFGetResp_PMT | | | |
| **PDU Type** : PMF_Frame2 | | | |
| **Derivation Path** : PMFGetResp | | | |
| **Comments** : Get response PORTMyType. | | | |
| **Constraint Value** | | | |
| REPLACE | Transaction_ID | BY | ‘00001000’H, |
| REPLACE | getresponse | BY | PMFResponse_PMT |

| ASN.1 PDU Constraint Declaration | | | |
|---|---|---|---|
| **Constraint Name** : PMFGetResp_PNT | | | |
| **PDU Type** : PMF_Frame2 | | | |
| **Derivation Path** : PMFGetResp | | | |
| **Comments** : Get response PORTNeighborType. | | | |
| **Constraint Value** | | | |
| REPLACE | Transaction_ID | BY | ‘00001010’H, |
| REPLACE | getresponse | BY | PMFResponse_PNT |

| ASN.1 PDU Constraint Declaration | | | |
|---|---|---|---|
| **Constraint Name** : PMFGetResp_PCP | | | |
| **PDU Type** : PMF_Frame2 | | | |
| **Derivation Path** : PMFGetResp | | | |
| **Comments** : Get response PORTCurrentPath. | | | |
| **Constraint Value** | | | |
| REPLACE | Transaction_ID | BY | ‘00001040’H, |
| REPLACE | getresponse | BY | PMFResponse_PCP |



Copyright International Organization for Standardization
Provided by IHS under license with ISO
No reproduction or networking permitted without license from IHS
Not for Resale

| ASN.1 PDU Constraint Declaration | | | |
|---|---|---|---|
| **Constraint Name** : PMFGetResp_PRPA<br>**PDU Type** : PMF_Frame2<br>**Derivation Path** : PMFGetResp<br>**Comments** : Get response PORTRequestedPaths. | | | |
| **Constraint Value** | | | |
| REPLACE | Transaction_ID | BY | ‘00001050’H, |
| REPLACE | getresponse | BY | PMFResponse_PRPA |

| ASN.1 PDU Constraint Declaration | | | |
|---|---|---|---|
| **Constraint Name** : PMFGetResp_PRPB1<br>**PDU Type** : PMF_Frame2<br>**Derivation Path** : PMFGetResp<br>**Comments** : Get response PORTRequestedPaths. | | | |
| **Constraint Value** | | | |
| REPLACE | Transaction_ID | BY | ‘00001052’H, |
| REPLACE | getresponse | BY | PMFResponse_PRPB1 |

| ASN.1 PDU Constraint Declaration | | | |
|---|---|---|---|
| **Constraint Name** : PMFGetResp_PRPB2<br>**PDU Type** : PMF_Frame2<br>**Derivation Path** : PMFGetResp<br>**Comments** : Get response PORTRequestedPaths. | | | |
| **Constraint Value** | | | |
| REPLACE | Transaction_ID | BY | ‘00001054’H, |
| REPLACE | getresponse | BY | PMFResponse_PRPB2 |

| ASN.1 PDU Constraint Declaration | | | |
|---|---|---|---|
| **Constraint Name** : PMFGetResp_PRPS<br>**PDU Type** : PMF_Frame2<br>**Derivation Path** : PMFGetResp<br>**Comments** : Get response PORTRequestedPaths. | | | |
| **Constraint Value** | | | |
| REPLACE | Transaction_ID | BY | ‘00001056’H, |
| REPLACE | getresponse | BY | PMFResponse_PRPS |


--`,,```,,,,````-`-`,,`,,`,`,,`---
Copyright International Organization for Standardization
Provided by IHS under license with ISO
No reproduction or networking permitted without license from IHS
Not for Resale

| ASN.1 PDU Constraint Declaration | | | |
|---|---|---|---|
| **Constraint Name** : PMFGetResp_PRPM | | | |
| **PDU Type** : PMF_Frame2 | | | |
| **Derivation Path** : PMFGetResp | | | |
| **Comments** : Get response PORTRequestedPaths. | | | |
| **Constraint Value** | | | |
| REPLACE | Transaction_ID | BY | ‘00001058’H, |
| REPLACE | getresponse | BY | PMFResponse_PRPM |

| ASN.1 PDU Constraint Declaration | | | |
|---|---|---|---|
| **Constraint Name** : PMFGetResp_PMP | | | |
| **PDU Type** : PMF_Frame2 | | | |
| **Derivation Path** : PMFGetResp | | | |
| **Comments** : Get response PORTMACPlacement. | | | |
| **Constraint Value** | | | |
| REPLACE | Transaction_ID | BY | ‘00001060’H, |
| REPLACE | getresponse | BY | PMFResponse_PMP |

| ASN.1 PDU Constraint Declaration | | | |
|---|---|---|---|
| **Constraint Name** : PMFGetResp_PAP | | | |
| **PDU Type** : PMF_Frame2 | | | |
| **Derivation Path** : PMFGetResp | | | |
| **Comments** : Get response PORTAvailablePaths. | | | |
| **Constraint Value** | | | |
| REPLACE | Transaction_ID | BY | ‘00001070’H, |
| REPLACE | getresponse | BY | PMFResponse_PAP |

| ASN.1 PDU Constraint Declaration | | | |
|---|---|---|---|
| **Constraint Name** : PMFGetResp_PMLT1 | | | |
| **PDU Type** : PMF_Frame2 | | | |
| **Derivation Path** : PMFGetResp | | | |
| **Comments** : Get response PORTMACLoop_Time. | | | |
| **Constraint Value** | | | |
| REPLACE | Transaction_ID | BY | ‘00001080’H, |
| REPLACE | getresponse | BY | PMFResponse_PMLT1 |



--`,,```,,,,````-`-`,,`,,`,`,,`---
Copyright International Organization for Standardization
Provided by IHS under license with ISO
No reproduction or networking permitted without license from IHS
Not for Resale

| ASN.1 PDU Constraint Declaration | | | |
|---|---|---|---|
| **Constraint Name** : PMFGetResp_PMLT2 | | | |
| **PDU Type** : PMF_Frame2 | | | |
| **Derivation Path** : PMFGetResp | | | |
| **Comments** : Get response PORTMACLoop_Time. | | | |
| **Constraint Value** | | | |
| REPLACE | Transaction_ID | BY | ‘00001084’H, |
| REPLACE | getresponse | BY | PMFResponse_PMLT3 |

| ASN.1 PDU Constraint Declaration | | | |
|---|---|---|---|
| **Constraint Name** : PMFGetResp_PPC | | | |
| **PDU Type** : PMF_Frame2 | | | |
| **Derivation Path** : PMFGetResp | | | |
| **Comments** : Get response PORTPMDClass. | | | |
| **Constraint Value** | | | |
| REPLACE | Transaction_ID | BY | ‘00001090’H, |
| REPLACE | getresponse | BY | PMFResponse_PPC |

| ASN.1 PDU Constraint Declaration | | | |
|---|---|---|---|
| **Constraint Name** : PMFGetResp_PRTI | | | |
| **PDU Type** : PMF_Frame2 | | | |
| **Derivation Path** : PMFGetResp | | | |
| **Comments** : Get response PORTIndex. | | | |
| **Constraint Value** | | | |
| REPLACE | Transaction_ID | BY | ‘000010B0’H, |
| REPLACE | getresponse | BY | PMFResponse_PRTI |

| ASN.1 PDU Constraint Declaration | | | |
|---|---|---|---|
| **Constraint Name** : PMFGetResp_PPL | | | |
| **PDU Type** : PMF_Frame2 | | | |
| **Derivation Path** : PMFGetResp | | | |
| **Comments** : Get response PORTPC_LS. | | | |
| **Constraint Value** | | | |
| REPLACE | Transaction_ID | BY | ‘000010E0’H, |
| REPLACE | getresponse | BY | PMFResponse_PPL |


--`,,```,,,,````-`-`,,`,,`,`,,`---
Copyright International Organization for Standardization
Provided by IHS under license with ISO
No reproduction or networking permitted without license from IHS
Not for Resale

| ASN.1 PDU Constraint Declaration | | | |
|---|---|---|---|
| **Constraint Name** : PMFGetResp_PLC<br>**PDU Type** : PMF_Frame2<br>**Derivation Path** : PMFGetResp<br>**Comments** : Get response PORTLer_Cutoff. | | | |
| **Constraint Value** | | | |
| REPLACE | Transaction_ID | BY | ‘00001140’H, |
| REPLACE | getresponse | BY | PMFResponse_PLC |

| ASN.1 PDU Constraint Declaration | | | |
|---|---|---|---|
| **Constraint Name** : PMFGetResp_PLA<br>**PDU Type** : PMF_Frame2<br>**Derivation Path** : PMFGetResp<br>**Comments** : Get response PORTLer_Alarm. | | | |
| **Constraint Value** | | | |
| REPLACE | Transaction_ID | BY | ‘00001150’H, |
| REPLACE | getresponse | BY | PMFResponse_PLA |

| ASN.1 PDU Constraint Declaration | | | |
|---|---|---|---|
| **Constraint Name** : PMFGetResp_PCS<br>**PDU Type** : PMF_Frame2<br>**Derivation Path** : PMFGetResp<br>**Comments** : Get response PORTConnectState. | | | |
| **Constraint Value** | | | |
| REPLACE | Transaction_ID | BY | ‘00001160’H, |
| REPLACE | getresponse | BY | PMFResponse_PCS |

| ASN.1 PDU Constraint Declaration | | | |
|---|---|---|---|
| **Constraint Name** : PMFGetResp_PPS<br>**PDU Type** : PMF_Frame2<br>**Derivation Path** : PMFGetResp<br>**Comments** : Get response PORTPCMState. | | | |
| **Constraint Value** | | | |
| REPLACE | Transaction_ID | BY | ‘00001170’H, |
| REPLACE | getresponse | BY | PMFResponse_PPS |



Copyright International Organization for Standardization
Provided by IHS under license with ISO
No reproduction or networking permitted without license from IHS
Not for Resale

| ASN.1 PDU Constraint Declaration | | | |
|---|---|---|---|
| **Constraint Name** : PMFGetResp_PPW<br>**PDU Type** : PMF_Frame2<br>**Derivation Path** : PMFGetResp<br>**Comments** : Get response PORTPC_Withhold. | | | |
| **Constraint Value** | | | |
| REPLACE | Transaction_ID | BY | ‘00001180’H, |
| REPLACE | getresponse | BY | PMFResponse_PPW |

| ASN.1 PDU Constraint Declaration | | | |
|---|---|---|---|
| **Constraint Name** : PMFGetResp_PHP<br>**PDU Type** : PMF_Frame2<br>**Derivation Path** : PMFGetResp<br>**Comments** : Get response PORTHardwarePresent. | | | |
| **Constraint Value** | | | |
| REPLACE | Transaction_ID | BY | ‘000011A0’H, |
| REPLACE | getresponse | BY | PMFResponse_PHP |

| ASN.1 PDU Constraint Declaration | | |
|---|---|---|
| **Constraint Name** : PMFSetReq<br>**PDU Type** : PMF_Frame3<br>**Derivation Path** :<br>**Comments** : PMF set request. | | |
| **Constraint Value** | | |
| { | SD | JK, |
| | FC | ‘41’H, |
| | DA | IUT_ADDRESS, |
| | SA | TESTER_ADDRESS, |
| | Frame_Class | ‘09’H, |
| | Frame_Type | ‘02’H, --request-- |
| | Version_ID | ‘0002’H, |
| | Transaction_ID | ?, |
| | Station_ID1 | ‘0000’H, |
| | Station_ID2 | TESTER_ADDRESS, |
| | PAD | PAD_2, |
| | InfoField_Length | ?, |
| | setrequest | PMFRequest_Base, |
| | FCS | ? |
| | ED | T |
| | FS_E | RESET, |
| | FS_A | RESET, |
| | FS_C | RESET, |
| | FS_2 | OMIT, |
| | FS_T | T } |


Copyright International Organization for Standardization
Provided by IHS under license with ISO
No reproduction or networking permitted without license from IHS
Not for Resale

| ASN.1 PDU Constraint Declaration | | | |
|---|---|---|---|
| **Constraint Name** : PMFSetReq_SUD | | | |
| **PDU Type** : PMF_Frame3 | | | |
| **Derivation Path** : PMFSetReq | | | |
| **Comments** : Set request SMTUserData. | | | |
| **Constraint Value** | | | |
| REPLACE | Transaction_ID | BY | ‘00000132’H, |
| REPLACE | setrequest | BY | PMFRequest_SUD |

| ASN.1 PDU Constraint Declaration | | | |
|---|---|---|---|
| **Constraint Name** : PMFSetReq_SCP | | | |
| **PDU Type** : PMF_Frame3 | | | |
| **Derivation Path** : PMFSetReq | | | |
| **Comments** : Set request SMTConnectionPolicy. | | | |
| **Constraint Value** | | | |
| REPLACE | Transaction_ID | BY | ‘00000262’H, |
| REPLACE | setrequest | BY | PMFRequest_SCP |

| ASN.1 PDU Constraint Declaration | | | |
|---|---|---|---|
| **Constraint Name** : PMFSetReq_TN | | | |
| **PDU Type** : PMF_Frame3 | | | |
| **Derivation Path** : PMFSetReq | | | |
| **Comments** : Set request SMTT_Notify. | | | |
| **Constraint Value** | | | |
| REPLACE | Transaction_ID | BY | ‘00000272’H, |
| REPLACE | setrequest | BY | PMFRequest_TN |

| ASN.1 PDU Constraint Declaration | | | |
|---|---|---|---|
| **Constraint Name** : PMFSetReq_SRP | | | |
| **PDU Type** : PMF_Frame3 | | | |
| **Derivation Path** : PMFSetReq | | | |
| **Comments** : Set request SMTStatRptPolicy. | | | |
| **Constraint Value** | | | |
| REPLACE | Transaction_ID | BY | ‘00000282’H, |
| REPLACE | setrequest | BY | PMFRequest_SRP |



Copyright International Organization for Standardization
Provided by IHS under license with ISO
No reproduction or networking permitted without license from IHS
Not for Resale

| ASN.1 PDU Constraint Declaration | | | |
|---|---|---|---|
| **Constraint Name** : PMFSetReq_TME | | | |
| **PDU Type** : PMF_Frame3 | | | |
| **Derivation Path** : PMFSetReq | | | |
| **Comments** : Set request SMTTrace_MaxExpiration. | | | |
| **Constraint Value** | | | |
| REPLACE | Transaction_ID | BY | ‘00000292’H, |
| REPLACE | setrequest | BY | PMFRequest_TME |

| ASN.1 PDU Constraint Declaration | | | |
|---|---|---|---|
| **Constraint Name** : PMFSetReq_MRP | | | |
| **PDU Type** : PMF_Frame3 | | | |
| **Derivation Path** : PMFSetReq | | | |
| **Comments** : Set request MACRequestedPaths. | | | |
| **Constraint Value** | | | |
| REPLACE | Transaction_ID | BY | ‘00000772’H, |
| REPLACE | setrequest | BY | PMFRequest_MRP |

| ASN.1 PDU Constraint Declaration | | | |
|---|---|---|---|
| **Constraint Name** : PMFSetReq_PTR | | | |
| **PDU Type** : PMF_Frame3 | | | |
| **Derivation Path** : PMFSetReq | | | |
| **Comments** : Set request PATHT_Rmode. | | | |
| **Constraint Value** | | | |
| REPLACE | Transaction_ID | BY | ‘00000F62’H, |
| REPLACE | setrequest | BY | PMFRequest_PTR |

| ASN.1 PDU Constraint Declaration | | | |
|---|---|---|---|
| **Constraint Name** : PMFSetReq_PMLT | | | |
| **PDU Type** : PMF_Frame3 | | | |
| **Derivation Path** : PMFSetReq | | | |
| **Comments** : Set request PORTMACLoop_Time. | | | |
| **Constraint Value** | | | |
| REPLACE | Transaction_ID | BY | ‘00001082’H, |
| REPLACE | setrequest | BY | PMFRequest_PMLT |

--`,,```,,,,````-`-`,,`,,`,`,,`---



Copyright International Organization for Standardization
Provided by IHS under license with ISO
No reproduction or networking permitted without license from IHS
Not for Resale

| ASN.1 PDU Constraint Declaration | | | |
|---|---|---|---|
| **Constraint Name** : PMFSetReq_DisableA<br>**PDU Type** : PMF_Frame3<br>**Derivation Path** : PMFSetReq<br>**Comments** : Set request SMTStationAction. | | | |
| **Constraint Value** | | | |
| REPLACE | Transaction_ID | BY | ‘000011C0’H, |
| REPLACE | setrequest | BY | PMFRequest_DisableA |

| ASN.1 PDU Constraint Declaration | | | |
|---|---|---|---|
| **Constraint Name** : PMFSetReq_DisableB<br>**PDU Type** : PMF_Frame3<br>**Derivation Path** : PMFSetReq<br>**Comments** : Set request SMTStationAction. | | | |
| **Constraint Value** | | | |
| REPLACE | Transaction_ID | BY | ‘000011C2’H, |
| REPLACE | setrequest | BY | PMFRequest_DisableB |

| ASN.1 PDU Constraint Declaration | | |
|---|---|---|
| **Constraint Name** : PMFSetResp<br>**PDU Type** : PMF_Frame4<br>**Derivation Path** :<br>**Comments** : PMF set response. | | |
| **Constraint Value** | | |
| { | SD | JK, |
| | FC | ‘41’H, |
| | DA | TESTER_ADDRESS, |
| | SA | IUT_ADDRESS, |
| | Frame_Class | ‘09’H, |
| | Frame_Type | ‘03’H, --response-- |
| | Version_ID | ‘0002’H, |
| | Transaction_ID | ?, |
| | Station_ID1 | ‘0000’H, |
| | Station_ID2 | IUT_ADDRESS, |
| | PAD | PAD_2, |
| | InfoField_Length | ?, |
| | setresponse | PMFResponse_Base, |
| | FCS | ?, |
| | ED | T, |
| | FS_E | RESET, |
| | FS_A | RESET, |
| | FS_C | RESET, |
| | FS_2 | OMIT, |
| | FS_T | T } |



Copyright International Organization for Standardization
Provided by IHS under license with ISO
No reproduction or networking permitted without license from IHS
Not for Resale

| ASN.1 PDU Constraint Declaration | | | |
|---|---|---|---|
| **Constraint Name** : PMFSetResp_SUD | | | |
| **PDU Type** : PMF_Frame4 | | | |
| **Derivation Path** : PMFSetResp | | | |
| **Comments** : Set response SMTUserData. | | | |
| **Constraint Value** | | | |
| REPLACE | Transaction_ID | BY | '00000132'H, |
| REPLACE | setresponse | BY | PMFResponse_SUD2 |

| ASN.1 PDU Constraint Declaration | | | |
|---|---|---|---|
| **Constraint Name** : PMFSetResp_SCP | | | |
| **PDU Type** : PMF_Frame4 | | | |
| **Derivation Path** : PMFSetResp | | | |
| **Comments** : Set response SMTConnectionPolicy. | | | |
| **Constraint Value** | | | |
| REPLACE | Transaction_ID | BY | '00000262'H, |
| REPLACE | setresponse | BY | PMFResponse_SCP2 |

| ASN.1 PDU Constraint Declaration | | | |
|---|---|---|---|
| **Constraint Name** : PMFSetResp_TN | | | |
| **PDU Type** : PMF_Frame4 | | | |
| **Derivation Path** : PMFSetResp | | | |
| **Comments** : Set response SMTT_Notify. | | | |
| **Constraint Value** | | | |
| REPLACE | Transaction_ID | BY | '00000272'H, |
| REPLACE | setresponse | BY | PMFResponse_TN2 |

| ASN.1 PDU Constraint Declaration | | | |
|---|---|---|---|
| **Constraint Name** : PMFSetResp_SRP | | | |
| **PDU Type** : PMF_Frame4 | | | |
| **Derivation Path** : PMFSetResp | | | |
| **Comments** : Set response SMTStatRptPolicy. | | | |
| **Constraint Value** | | | |
| REPLACE | Transaction_ID | BY | '00000282'H, |
| REPLACE | setresponse | BY | PMFResponse_SRP2 |

| ASN.1 PDU Constraint Declaration | | | |
|---|---|---|---|
| **Constraint Name** : PMFSetResp_TME | | | |
| **PDU Type** : PMF_Frame4 | | | |
| **Derivation Path** : PMFSetResp | | | |
| **Comments** : Set response SMTTrace_MaxExpiration. | | | |
| **Constraint Value** | | | |
| REPLACE | Transaction_ID | BY | '00000292'H, |
| REPLACE | setresponse | BY | PMFResponse_TME2 |


Copyright International Organization for Standardization
Provided by IHS under license with ISO
No reproduction or networking permitted without license from IHS Not for Resale

| ASN.1 PDU Constraint Declaration | | | |
|---|---|---|---|
| **Constraint Name** : PMFSetResp_MRP | | | |
| **PDU Type** : PMF_Frame4 | | | |
| **Derivation Path** : PMFSetResp | | | |
| **Comments** : Set response MACRequestedPaths. | | | |
| **Constraint Value** | | | |
| REPLACE | Transaction_ID | BY | ‘00000772’H, |
| REPLACE | setresponse | BY | PMFResponse_MRP2 |

| ASN.1 PDU Constraint Declaration | | | |
|---|---|---|---|
| **Constraint Name** : PMFSetResp_PTR | | | |
| **PDU Type** : PMF_Frame4 | | | |
| **Derivation Path** : PMFSetResp | | | |
| **Comments** : Set response PATHT_Rmode. | | | |
| **Constraint Value** | | | |
| REPLACE | Transaction_ID | BY | ‘00000F62’H, |
| REPLACE | setresponse | BY | PMFResponse_PTR2 |

| ASN.1 PDU Constraint Declaration | | | |
|---|---|---|---|
| **Constraint Name** : PMFSetResp_PMLT | | | |
| **PDU Type** : PMF_Frame4 | | | |
| **Derivation Path** : PMFSetResp | | | |
| **Comments** : Set response PORTMACLoop_Time. | | | |
| **Constraint Value** | | | |
| REPLACE | Transaction_ID | BY | ‘00001082’H, |
| REPLACE | setresponse | BY | PMFResponse_PMLT2 |

| ASN.1 PDU Constraint Declaration | | |
|---|---|---|
| **Constraint Name** : LLC_FRM1 | | |
| **PDU Type** : LLC_Frame | | |
| **Derivation Path** : | | |
| **Comments** : LLC frame not addressed to IUT. | | |
| **Constraint Value** | | |
| { | SD | JK, |
| | FC | ‘D0’H, --LLC frame-- |
| | DA | OTHER_ADDRESS, |
| | SA | TESTER_ADDRESS, |
| | Info | LLC_DATA, |
| | FCS | ?, |
| | ED | T, |
| | FS_E | RESET, |
| | FS_A | RESET, |
| | FS_C | RESET, |
| | FS_2 | OMIT, |
| | FS_T | T } |



Copyright International Organization for Standardization
Provided by IHS under license with ISO
No reproduction or networking permitted without license from IHS
Not for Resale

| ASN.1 PDU Constraint Declaration | | | |
|---|---|---|---|
| **Constraint Name** : LLC_FRM2<br>**PDU Type** : LLC_Frame<br>**Derivation Path** : LLC_FRM1<br>**Comments** : LLC frame not addressed to IUT. | | | |
| **Constraint Value** | | | |
| REPLACE | DA | BY | IUT_ADDRESS |

| ASN.1 PDU Constraint Declaration | | | |
|---|---|---|---|
| **Constraint Name** : LLC_Err1<br>**PDU Type** : LLC_Frame<br>**Derivation Path** : LLC_FRM1<br>**Comments** : LLC frame with bad FCS addressed to IUT. | | | |
| **Constraint Value** | | | |
| REPLACE | DA | BY | IUT_ADDRESS, |
| REPLACE | FCS | BY | BAD_FCS |

| ASN.1 PDU Constraint Declaration | | | |
|---|---|---|---|
| **Constraint Name** : LLC_Err2<br>**PDU Type** : LLC_Frame<br>**Derivation Path** : LLC_FRM1<br>**Comments** : LLC frame with invalid symbol addressed to IUT. | | | |
| **Constraint Value** | | | |
| REPLACE | DA | BY | IUT_ADDRESS, |
| REPLACE | ED | BY | J |

| PDU Constraint Declaration | | |
|---|---|---|
| **Constraint Name** : IDLES<br>**PDU Type** : ILS_FRM<br>**Derivation Path** :<br>**Comments** : Frame with idle symbols only. | | |
| **Field Name** | **Field Value** | **Comments** |
| ILS | IIIIIIII | |



--`,,```,,,,````-`-`,,`,,`,`,,`---
Copyright International Organization for Standardization
Provided by IHS under license with ISO
No reproduction or networking permitted without license from IHS
Not for Resale

## 10.4 Dynamic Parts

### 10.4.1 MIB Test Case dynamic behavior

| Test Case Dynamic Behavior | | | | | |
|---|---|---|---|---|---|
| **Test Case Name** : fddiMIBAttrGrps<br>**Group** : FDDI_MIB/MIBGroups<br>**Purpose** : Verify elements of an SMT, MAC, PATH or PORT attribute group contained in the IUT Management Information Base.<br>**Default** :<br>**Comments** : | | | | | |
| **Nr** | **Label** | **Behavior Description** | **Constraints Ref** | **Verdict** | **Comments** |
| 1 | | +INIT_RING | | | (1) |
| 2 | | !PMF_Frame1 | PMFGetReq_MIBGrp | | (2) |
| 3 | | START Timer_30 | | | |
| 4 | L0 | ?PMF_Frame2 | PMFGetResp_MIBGrp | PASS | (3) |
| 5 | | ?OTHERWISE | | | |
| 6 | | GOTO L0 | | | |
| 7 | | ?TIMEOUT Timer_30 | | FAIL | (4) |
| **Detailed Comments:**<br>(1) Call the subroutine “INIT_RING” from the RMT ATS to bring the ring up. The ring is operational.<br>(2) Tester sends a PMF get request frame to inquire elements of an SMT, MAC, PATH or PORT attribute group of the IUT Management Information Base.<br>(3) IUT responds with appropriate elements as expected from the requested attribute group.<br>(4) IUT does not respond within 30 seconds since it receives the request frame. | | | | | |

| Test Case Dynamic Behavior | | | | | |
|---|---|---|---|---|---|
| **Test Case Name** : fddiSMTStationId<br>**Group** : FDDI_MIB/SMT<br>**Purpose** : Compare the fddiSMTStationId to the Station ID field of the IUT’s frame.<br>**Default** :<br>**Comments** : Assume IUT is a single MAC dual attachment station. | | | | | |
| **Nr** | **Label** | **Behavior Description** | **Constraints Ref** | **Verdict** | **Comments** |
| 1 | | +INIT_RING | | | (1) |
| 2 | | !PMF_Frame1 | PMFGetReq_SI | | (2) |
| 3 | | START Timer_30 | | | |
| 4 | L0 | ?PMF_Frame2 | PMFGetResp_SI | PASS | (3) |
| 5 | | ?OTHERWISE | | | |
| 6 | | GOTO L0 | | | |
| 7 | | ?TIMEOUT Timer_30 | | FAIL | (4) |
| **Detailed Comments:**<br>(1) Call the subroutine “INIT_RING” from the RMT ATS to bring the ring up. The ring is operational.<br>(2) Tester sends a PMF get request frame to inquire the fddiSMTStationId of the IUT.<br>(3) Receive a PMF get response frame from the IUT where the value of the fddiSMTStationId is matched the value in the Station ID field of the frame. | | | | | |



--`,,```,,,,````-`-`,,`,,`,`,,`---
Copyright International Organization for Standardization
Provided by IHS under license with ISO
No reproduction or networking permitted without license from IHS
Not for Resale

**Test Case Dynamic Behavior**

**Test Case Name** : fddiSMTManufacturerData
**Group** : FDDI_MIB/SMT
**Purpose** : Verify manufacturer data contained in the IUT Management Information Base.
**Default** :
**Comments** : This test case is optional. It is performed only if IUT supports fddiSMTManufacturerData attribute.

| Nr | Label | Behavior Description | Constraints Ref | Verdict | Comments |
|---|---|---|---|---|---|
| 1 | | +INIT_RING | | | (1) |
| 2 | | !PMF_Frame1 | PMFGetReq_SMD | | (2) |
| 3 | | START Timer_30 | | | |
| 4 | L0 | ?PMF_Frame2 | PMFGetResp_SMD | PASS | (3) |
| 5 | | ?OTHERWISE | | | |
| 6 | | GOTO L0 | | | |
| 7 | | ?TIMEOUT Timer_30 | | FAIL | (4) |

**Detailed Comments:**

(1) Call the subroutine “INIT_RING” from the RMT ATS to bring the ring up. The ring is operational.
(2) Tester sends a PMF get request frame to inquire the fddiSMTManufacturerData attribute contained in the IUT.
(3) IUT responds with its manufacturer data as entered into the PIXIT proforma.
(4) IUT does not respond within 30 seconds.

**Test Case Dynamic Behavior**

**Test Case Name** : fddiSMTMIBVersionId
**Group** : FDDI_MIB/SMT
**Purpose** : Verify MIB Version ID of the IUT.
**Default** :
**Comments** :

| Nr | Label | Behavior Description | Constraints Ref | Verdict | Comments |
|---|---|---|---|---|---|
| 1 | | +INIT_RING | | | (1) |
| 2 | | !PMF_Frame1 | PMFGetReq_SMVI | | (2) |
| 3 | | START Timer_30 | | | |
| 4 | L0 | ?PMF_Frame2 | PMFGetResp_SMVI | PASS | (3) |
| 5 | | ?OTHERWISE | | | |
| 6 | | GOTO L0 | | | |
| 7 | | ?TIMEOUT Timer_30 | | FAIL | (4) |

**Detailed Comments:**

(1) Call the subroutine “INIT_RING” from the RMT ATS to bring the ring up. The ring is operational.
(2) Tester sends a PMF get request frame to inquire the fddiSMTMIBVersion attribute contained in the IUT.
(3) IUT responds with its Version Id of 1 for this SMT revision.
(4) IUT does not respond within 30 seconds.


Copyright International Organization for Standardization
Provided by IHS under license with ISO
No reproduction or networking permitted without license from IHS
Not for Resale

**Test Case Dynamic Behavior**

**Test Case Name** : fddiSMTUserData
**Group** : FDDI_MIB/SMT
**Purpose** : Verify that the SMTUserData attribute of the IUT can be modified using a PMF Set protocol.
**Default** :
**Comments** :

| Nr | Label | Behavior Description | Constraints Ref | Verdict | Comments |
|---|---|---|---|---|---|
| 1 | | +INIT_RING | | | (1) |
| 2 | | !PMF_Frame1 | PMFGetReq_SUD | | (2) |
| 3 | | START Timer_30 | | | |
| 4 | L1 | ?PMF_Frame2 | PMFGetResp_SUD | | (3) |
| 5 | | !PMF_Frame3 | PMFSetReq_SUD | | (4) |
| 6 | | START Timer_30 | | | |
| 7 | L0 | ?PMF_Frame4 | PMFSetResp_SUD | PASS | (5) |
| 8 | | ?OTHERWISE | | | |
| 9 | | GOTO L0 | | | |
| 10 | | ?TIMEOUT Timer_30 | | FAIL | (6) |
| 11 | | ?OTHERWISE | | | |
| 12 | | GOTO L1 | | | |
| 13 | | ?TIMEOUT Timer_30 | | FAIL | (6) |

**Detailed Comments:**

(1) Call the subroutine “INIT_RING” from the RMT ATS to bring the ring up. The ring is operational.
(2) Tester sends a PMF get request to inquire the fddiSMTUserData attribute contained in the IUT.
(3) IUT responds with its fddiSMTUserData.
(4) Tester sends a PMF set request to modify the fddiSMTUserData attribute of the IUT.
(5) Receive PMF set response with the modified fddiSMTUserData attribute as requested from the IUT.
(6) IUT does not respond within 30 seconds.

**Test Case Dynamic Behavior**

**Test Case Name** : fddiSMTMac_Ct
**Group** : FDDI_MIB/SMT
**Purpose** : Verify number of MACs in the IUT.
**Default** :
**Comments** :

| Nr | Label | Behavior Description | Constraints Ref | Verdict | Comments |
|---|---|---|---|---|---|
| 1 | | +INIT_RING | | | (1) |
| 2 | | !PMF_Frame1 | PMFGetReq_MacCt | | (2) |
| 3 | | START Timer_30 | | | |
| 4 | L0 | ?PMF_Frame2 | PMFGetResp_MacCt | PASS | (3) |
| 5 | | ?OTHERWISE | | | |
| 6 | | GOTO L0 | | | |
| 7 | | ?TIMEOUT Timer_30 | | FAIL | (4) |

**Detailed Comments:**

(1) Call the subroutine “INIT_RING” from the RMT ATS to bring the ring up. The ring is operational.
(2) Tester sends a PMF get request to inquire the fddiSMTMacCt attribute contained in the IUT.
(3) IUT responds with the number of MACs as entered into the PIXIT proforma.
(4) IUT does not respond within 30 seconds.



Copyright International Organization for Standardization
Provided by IHS under license with ISO
No reproduction or networking permitted without license from IHS
Not for Resale

**Test Case Dynamic Behavior**

**Test Case Name** : fddiSMTNonMaster_Ct
**Group** : FDDI_MIB/SMT
**Purpose** : Verify number of A, B and S ports in the IUT.
**Default** :
**Comments** :

| Nr | Label | Behavior Description | Constraints Ref | Verdict | Comments |
|---|---|---|---|---|---|
| 1 | | +INIT_RING | | | (1) |
| 2 | | !PMF_Frame1 | PMFGetReq_NonMasterCt | | (2) |
| 3 | | START Timer_30 | | | |
| 4 | L0 | ?PMF_Frame2 | PMFGetResp_NonMasterC | PASS | (3) |
| 5 | | ?OTHERWISE | t | | |
| 6 | | GOTO L0 | | | |
| 7 | | ?TIMEOUT Timer_30 | | FAIL | (4) |

**Detailed Comments:**

(1) Call the subroutine “INIT_RING” from the RMT ATS to bring the ring up. The ring is operational.
(2) Tester sends a PMF get request to inquire the fddiSMTNonMaster_Ct attribute contained in the IUT.
(3) IUT responds with the number of A, B and S ports as entered into the PIXIT proforma.
(4) IUT does not respond within 30 seconds.

**Test Case Dynamic Behavior**

**Test Case Name** : fddiSMTMaster_Ct
**Group** : FDDI_MIB/SMT
**Purpose** : Verify number of M ports in the IUT.
**Default** :
**Comments** : Assume IUT is a concentrator.

| Nr | Label | Behavior Description | Constraints Ref | Verdict | Comments |
|---|---|---|---|---|---|
| 1 | | +INIT_RING | | | (1) |
| 2 | | !PMF_Frame1 | PMFGetReq_MasterCt | | (2) |
| 3 | | START Timer_30 | | | |
| 4 | L0 | ?PMF_Frame2 | PMFGetResp_MasterCt | PASS | (3) |
| 5 | | ?OTHERWISE | | | |
| 6 | | GOTO L0 | | | |
| 7 | | ?TIMEOUT Timer_30 | | FAIL | (4) |

**Detailed Comments:**

(1) Call the subroutine “INIT_RING” from the RMT ATS to bring the ring up. The ring is operational.
(2) Tester sends a PMF get request to inquire the fddiSMTMaster_Ct attribute contained in the IUT.
(3) IUT responds with the number of M ports as entered into the PIXIT proforma.
(4) IUT does not respond within 30 seconds.


Copyright International Organization for Standardization
Provided by IHS under license with ISO
No reproduction or networking permitted without license from IHS
Not for Resale

| Test Case Dynamic Behavior | | | | | |
|---|---|---|---|---|---|
| **Test Case Name** : fddiSMTAvailablePaths<br>**Group** : FDDI_MIB/SMT<br>**Purpose** : Verify available paths in the IUT.<br>**Default** :<br>**Comments** : | | | | | |
| **Nr** | **Label** | **Behavior Description** | **Constraints Ref** | **Verdict** | **Comments** |
| 1 | | +INIT_RING | | | (1) |
| 2 | | !PMF_Frame1 | PMFGetReq_SAP | | (2) |
| 3 | | START Timer_30 | | | |
| 4 | L0 | ?PMF_Frame2 | PMFGetResp_SAP | PASS | (3) |
| 5 | | ?OTHERWISE | | | |
| 6 | | GOTO L0 | | | |
| 7 | | ?TIMEOUT Timer-30 | | FAIL | (4) |
| **Detailed Comments:**<br>(1) Call the subroutine “INIT_RING” from the RMT ATS to bring the ring up. The ring is operational.<br>(2) Tester sends a PMF get request to inquire the fddiSMTAvailablePaths attribute contained in the IUT.<br>(3) IUT responds with available path types as entered into the PIXIT proforma.<br>(4) IUT does not respond within 30 seconds. | | | | | |

| Test Case Dynamic Behavior | | | | | |
|---|---|---|---|---|---|
| **Test Case Name** : fddiSMTConfigCapabilities<br>**Group** : FDDI_MIB/SMT<br>**Purpose** : Verify configuration capabilities of the IUT.<br>**Default** :<br>**Comments** : Assume that IUT is a dual MAC dual attachment station whose Hold function and wrap_ab capabilities are supported. | | | | | |
| **Nr** | **Label** | **Behavior Description** | **Constraints Ref** | **Verdict** | **Comments** |
| 1 | | +INIT_RING | | | (1) |
| 2 | | !PMF_Frame1 | PMFGetReq_SCC | | (2) |
| 3 | | START Timer-30 | | | |
| 4 | L0 | ?PMF_Frame2 | PMFGetResp_SCC | PASS | (3) |
| 5 | | ?OTHERWISE | | | |
| 6 | | GOTO L0 | | | |
| 7 | | ?TIMEOUT Timer_30 | | FAIL | (4) |
| **Detailed Comments:**<br>(1) Call the subroutine “INIT_RING” from the RMT ATS to bring the ring up. The ring is operational.<br>(2) Tester sends a PMF get request to inquire the fddiSMTConfigCapabilities attribute contained in the IUT.<br>(3) IUT responds with configuration capabilities as entered into the PIXIT proforma.<br>(4) IUT does not respond within 30 seconds. | | | | | |



Copyright International Organization for Standardization
Provided by IHS under license with ISO
No reproduction or networking permitted without license from IHS
Not for Resale

| Test Case Dynamic Behavior | | | | | |
|---|---|---|---|---|---|
| **Test Case Name** : fddiSMTConnectionPolicy<br>**Group** : FDDI_MIB/SMT<br>**Purpose** : Verify that fddiSMTConnectionPolicy attribute can be modified using PMF Set protocol.<br>**Default** :<br>**Comments** : | | | | | |
| **Nr** | **Label** | **Behavior Description** | **Constraints Ref** | **Verdict** | **Comments** |
| 1 | | +INIT_RING | | | (1) |
| 2 | | !PMF_Frame1 | PMFGetReq_SCP | | (2) |
| 3 | | START Timer_30 | | | |
| 4 | L1 | ?PMF_Frame2 | PMFGetResp_SCP | | (3) |
| 5 | | !PMF_Frame3 | PMFSetReq_SCP | | (4) |
| 6 | | START Timer_30 | | | |
| 7 | L0 | ?PMF_Frame4 | PMFSetResp_SCP | PASS | (5) |
| 8 | | ?OTHERWISE | | | |
| 9 | | GOTO L0 | | | |
| 10 | | ?TIMEOUT Timer_30 | | FAIL | (6) |
| 11 | | ?OTHERWISE | | | |
| 12 | | GOTO L1 | | | |
| 13 | | ?TIMEOUT Timer_30 | | FAIL | (6) |
| **Detailed Comments:**<br>(1) Call the subroutine “INIT_RING” from the RMT ATS to bring the ring up. The ring is operational.<br>(2) Tester sends a PMF get request to inquire the fddiSMTConnectionPolicy attribute contained in the IUT.<br>(3) IUT responds with its connection policies as entered into the PIXIT proforma.<br>(4) Tester sends a PMF set request to modify the fddiSMTConnectionPolicy attribute of the IUT.<br>(5) Receive PMF set response with the modified fddiSMTConnectionPolicy attribute from the IUT.<br>(6) IUT does not respond within 30 seconds. | | | | | |

| Test Case Dynamic Behavior | | | | | |
|---|---|---|---|---|---|
| **Test Case Name** : fddiSMTT_Notify<br>**Group** : FDDI_MIB/SMT<br>**Purpose** : Verify that fddiSMTT_Notify attribute can be modified using PMF set protocol.<br>**Default** :<br>**Comments** : | | | | | |
| **Nr** | **Label** | **Behavior Description** | **Constraints Ref** | **Verdict** | **Comments** |
| 1 | | +INIT_RING | | | (1) |
| 2 | | !PMF_Frame1 | PMFGetReq_TN | | (2) |
| 3 | | START Timer_30 | | | |
| 4 | L1 | ?PMF_Frame2 | PMFGetResp_TN | | (3) |
| 5 | | !PMF_Frame3 | PMFSetReq_TN | | (4) |
| 6 | | START Timer_30 | | | |
| 7 | L0 | ?PMF_Frame4 | PMFSetResp_TN | PASS | (5) |
| 8 | | ?OTHERWISE | | | |
| 9 | | GOTO L0 | | | |
| 10 | | ?TIMEOUT Timer_30 | | FAIL | (6) |
| 11 | | ?OTHERWISE | | | |
| 12 | | GOTO L1 | | | |
| 13 | | ?TIMEOUT Timer_30 | | FAIL | (6) |
| **Detailed Comments:**<br>(1) Call the subroutine “INIT_RING” from the RMT ATS to bring the ring up. The ring is operational.<br>(2) Tester sends a PMF get request to inquire the fddiSMTT_Notify attribute contained in the IUT.<br>(3) IUT responds with T_Notify as entered into the PIXIT proforma<br>(4) Tester sends a PMF set request to modify the fddiSMTT_Notify attribute of the IUT.<br>(5) Receive PMF set response with the modified fddiSMTT_Notify attribute from the IUT.<br>(6) IUT does not respond within 30 seconds. | | | | | |


Copyright International Organization for Standardization
Provided by IHS under license with ISO
No reproduction or networking permitted without license from IHS
Not for Resale

**Test Case Dynamic Behavior**

**Test Case Name** : fddiSMTStatRptPolicy
**Group** : FDDI_MIB/SMT
**Purpose** : Verify that fddiSMTStatRptPolicy attribute can be modified using PMF set protocol.
**Default** :
**Comments** :

| Nr | Label | Behavior Description | Constraints Ref | Verdict | Comments |
|---|---|---|---|---|---|
| 1 | | +INIT-RING | | | (1) |
| 2 | | !PMF_Frame1 | PMFGetReq_SRP | | (2) |
| 3 | | START Timer_30 | | | |
| 4 | L1 | ?PMF_Frame2 | PMFGetResp_SRP | | (3) |
| 5 | | !PMF_Frame3 | PMFSetReq_SRP | | (4) |
| 6 | | START Timer_30 | | | |
| 7 | L0 | ?PMF_FRAME4 | PMFSetResp_SRP | PASS | (5) |
| 8 | | ?OTHERWISE | | | |
| 9 | | GOTO L0 | | | |
| 10 | | ?TIMEOUT Timer_30 | | FAIL | (6) |
| 11 | | ?OTHERWISE | | | |
| 12 | | GOTO L1 | | | |
| 13 | | ?TIMEOUT Timer_30 | | FAIL | (6) |

**Detailed Comments:**

(1) Call the subroutine “INIT_RING” from the RMT ATS to bring the ring up. The ring is operational.
(2) Tester sends a PMF get request to inquire the fddiSMTStatRptPolicy attribute contained in the IUT.
(3) IUT responds with its initial value of TRUE.
(4) Tester sends a PMF set request to modify the value of the fddiSMTStatRptPolicy to FALSE.
(5) Receive PMF set response with the modified fddiSMTStatRptPolicy value of FALSE from the IUT.
(6) IUT does not respond within 30 seconds.



Copyright International Organization for Standardization
Provided by IHS under license with ISO
No reproduction or networking permitted without license from IHS
Not for Resale

**Test Case Dynamic Behavior**

**Test Case Name** : fddiSMTTrace_MaxExpiration
**Group** : FDDI_MIB/SMT
**Purpose** : Verify that fddiSMTTrace_MaxExpiration attribute can be modified using PM set protocol.
**Default** :
**Comments** :

| Nr | Label | Behavior Description | Constraints Ref | Verdict | Comments |
|---|---|---|---|---|---|
| 1 | | +INIT_RING | | | (1) |
| 2 | | !PMF_Frame1 | PMFGetReq_TME | | (2) |
| 3 | | START Timer_30 | | | |
| 4 | L1 | ?PMF_Frame2 | PMFGetResp_TME | | (3) |
| 5 | | !PMF_Frame3 | PMFSetReq_TME | | (4) |
| 6 | | START Timer_30 | | | |
| 7 | L0 | ?PMF_Frame4 | PMFSetResp_TME | PASS | (5) |
| 8 | | ?OTHERWISE | | | |
| 9 | | GOTO L0 | | | |
| 10 | | ?TIMEOUT Timer_30 | | FAIL | (6) |
| 11 | | ?OTHERWISE | | | |
| 12 | | GOTO L1 | | | |
| 13 | | ?TIMEOUT Timer_30 | | FAIL | (6) |

**Detailed Comments:**

(1) Call the subroutine “INIT_RING” from the RMT ATS to bring the ring up. The ring is operational.
(2) Tester sends a PMF get request to inquire the fddiSMTTrace_MaxExpiration attribute contained in the IUT.
(3) IUT responds with its Trace_Max value as entered into the PIXIT proforma.
(4) Tester sends a PMF set request to modify the value of the fddiSMTTrace_MaxExpiration.
(5) IUT responds with the fddiSMTTrace_MaxExpiration value as requested.
(6) IUT does not respond within 30 seconds.


--`,,```,,,,````-`-`,,`,,`,`,,`---
Copyright International Organization for Standardization
Provided by IHS under license with ISO
No reproduction or networking permitted without license from IHS
Not for Resale

**Test Case Dynamic Behavior**

**Test Case Name** : fddiSMTCF_State_T
**Group** : FDDI_MIB/SMT
**Purpose** : Check the CF_State of a SM-DAS in Thru configuration.
**Default** :
**Comments** : This test case is applied to a PeerDAS connection.

Refer to the following for connection definitions where naming is biased towards IUT perspective.
If not specified, the connecting type will default to "Preferred".

**Connection definitions:**

PeerDAS - For DAS IUT, IUT:A to LT:B and IUT B to LT:A.
PeerWrpA - For DAS IUT, IUT:A to LT:B and LT:A withheld from IUT B.
PeerWrpB - For DAS IUT, IUT:B to LT:A and LT:B withheld from IUT:A.
PeerSA - For SAS IUT, IUT:S to LT:A
PeerSB - For SAS IUT, IUT:S to LT:B
PeerOne - PeerWrpA (DAS) or PeerSA (SAS) as applicable
Preferred - PeerDAS (DAS) or TreeSM (SAS) as applicable
None - No connection, all ports withheld.
TreeAM - For DAS IUT, IUT:A to LT:M
TreeBM - For DAS IUT, IUT:B to LT:M
TreeSM - For DAS IUT, IUT:S to LT:M
Any - any valid connection, not limited to the above set.

| Nr | Label | Behavior Description | Constraints Ref | Verdict | Comments |
|---|---|---|---|---|---|
| 1 | | +INIT_RING | | | (1) |
| 2 | | !PMF_Frame1 | PMFGetReq_Thru1 | | (2) |
| 3 | | START Timer_30 | | | |
| 4 | L0 | ?PMF_Frame2 | PMFGetResp_Thru1 | PASS | (3) |
| 5 | | ?OTHERWISE | | | |
| 6 | | GOTO L0 | | | |
| 7 | | ?TIMEOUT Timer_30 | | FAIL | (4) |

**Detailed Comments:**

(1) Call the subroutine “INIT_RING” from the RMT ATS to bring the ring up. The ring is operational.
(2) Tester sends a PMF get request frame to check the CF_State of the Thru configuration.
(3) The CF_State of the Thru configuration is “Thru”.
(4) IUT does not respond within 30 seconds.



Copyright International Organization for Standardization
Provided by IHS under license with ISO
No reproduction or networking permitted without license from IHS
Not for Resale

| Test Case Dynamic Behavior | | | | | |
|---|---|---|---|---|---|
| **Test Case Name** : fddiSMTCF_State_CWA<br>**Group** : FDDI_MIB/SMT<br>**Purpose** : Check the CF_State of a SM-DAS in c_wrap_a configuration.<br>**Default** :<br>**Comments** : This test is applied to the PeerWrpA and TreeAM connections. Refer to fddiSMTCF_State_T test case for connection definitions. | | | | | |
| **Nr** | **Label** | **Behavior Description** | **Constraints Ref** | **Verdict** | **Comments** |
| 1 | | +INIT_RING | | | (1) |
| 2 | | !PMF_Frame1 | PMFGetReq_CWRPA | | (2) |
| 3 | | START Timer_30 | | | |
| 4 | L0 | ?PMF_Frame2 | PMFGetResp_CWRPA | PASS | (3) |
| 5 | | ?OTHERWISE | | | |
| 6 | | GOTO L0 | | | |
| 7 | | ?TIMEOUT Timer_30 | | FAIL | (4) |
| **Detailed Comments:**<br>(1) Call the subroutine “INIT_RING” from the RMT ATS to bring the ring up. The ring is operational.<br>(2) Send a PMF get request frame to check the CF_State of the c_wrap_a configuration.<br>(3) The CF_State of the c_wrap_a configuration is “c_wrap_a”.<br>(4) IUT does not respond within 30 seconds. | | | | | |

| Test Case Dynamic Behavior | | | | | |
|---|---|---|---|---|---|
| **Test Case Name** : fddiSMTCF_State_CWB<br>**Group** : FDDI_MIB/SMT<br>**Purpose** : Check the CF_State of a SM-DAS in c_wrap_b configuration.<br>**Default** :<br>**Comments** : This test is applied to the PeerWrpB and TreeBM connections. Refer to fddiSMTCF_State_T test case for connection definitions. | | | | | |
| **Nr** | **Label** | **Behavior Description** | **Constraints Ref** | **Verdict** | **Comments** |
| 1 | | +INIT_RING | | | (1) |
| 2 | | !PMF_Frame1 | PMFGetReq_CWRPB | | (2) |
| 3 | | START Timer_30 | | | |
| 4 | L0 | ?PMF_Frame2 | PMFGetResp_CWRPB | PASS | (3) |
| 5 | | ?OTHERWISE | | | |
| 6 | | GOTO L0 | | | |
| 7 | | ?TIMEOUT Timer_30 | | FAIL | (4) |
| **Detailed Comments:**<br>(1) Call the subroutine “INIT_RING” from the RMT ATS to bring the ring up. The ring is operational.<br>(2) Send a PMF get request frame to check the CF_State of the c_wrap_b configuration.<br>(3) The CF_State of the c_wrap_b configuration is “c_wrap_b”.<br>(4) IUT does not respond within 30 seconds. | | | | | |



Copyright International Organization for Standardization
Provided by IHS under license with ISO
No reproduction or networking permitted without license from IHS
Not for Resale

**Test Case Dynamic Behavior**

**Test Case Name** : fddiSMTCF_State_WS
**Group** : FDDI_MIB/SMT
**Purpose** : Check the CF_State of a SM-DAS in wrap_s configuration.
**Default** :
**Comments** : This test is applied to the PeerSA, PeerSB or TreeSM connections. Refer to fddiSMTCF_State_T test case for connection definitions.

| Nr | Label | Behavior Description | Constraints Ref | Verdict | Comments |
|---|---|---|---|---|---|
| 1 | | +INIT_RING | | | (1) |
| 2 | | !PMF_Frame1 | PMFGetReq_WRPS | | (2) |
| 3 | | START Timer_30 | | | |
| 4 | L0 | ?PMF_Frame2 | PMFGetResp_WRPS | PASS | (3) |
| 5 | | ?OTHERWISE | | | |
| 6 | | GOTO L0 | | | |
| 7 | | ?TIMEOUT Timer_30 | | FAIL | (4) |

**Detailed Comments:**

(1) Call the subroutine “INIT_RING” from the RMT ATS to bring the ring up. The ring is operational.
(2) Send a PMF get request frame to check the CF_State of the wrap_s configuration.
(3) The CF_State of the wrap_s configuration is “wrap_s”.
(4) IUT does not respond within 30 seconds.

**Test Case Dynamic Behavior**

**Test Case Name** : fddiSMTCF_State_WAB
**Group** : FDDI_MIB/SMT
**Purpose** : Check the CF_State of a DM-DAS in wrap_ab configuration.
**Default** :
**Comments** : This test is applied to a DM-DAS which has the capability of performing a wrap_ab.

| Nr | Label | Behavior Description | Constraints Ref | Verdict | Comments |
|---|---|---|---|---|---|
| 1 | | +INIT_RING | | | (1) |
| 2 | | !PMF_Frame1 | PMFGetReq_SCC2 | | (2) |
| 3 | | START Timer_30 | | | |
| 4 | L1 | ?PMF_Frame2 | PMFGetResp_SCC2 | | (3) |
| 5 | | !PMF_Frame1 | PMFGetReq_WRPAB | | (4) |
| 6 | | START Timer_30 | | | |
| 7 | L0 | ?PMF_Frame2 | PMFGetResp_WRPAB | PASS | (5) |
| 8 | | ?OTHERWISE | | | |
| 9 | | GOTO L0 | | | |
| 10 | | ?TIMEOUT Timer_30 | | FAIL | (6) |
| 11 | | ?OTHERWISE | | | |
| 12 | | GOTO L1 | | | |
| 13 | | ?TIMEOUT Timer_30 | | FAIL | (6) |

**Detailed Comments:**

(1) Call the subroutine “INIT_RING” from the RMT ATS to bring the ring up. The ring is operational.
(2) Send a PMF get request frame to check the configuration capabilities of the IUT.
(3) IUT has the capability of performing a wrap_ab.
(4) Send a PMF get request frame to check the CF_State of the wrap_ab configuration.
(5) The CF_State of the wrap_ab configuration is “wrap_ab”.
(6) IUT does not respond within 30 seconds.



Copyright International Organization for Standardization
Provided by IHS under license with ISO
No reproduction or networking permitted without license from IHS
Not for Resale

**Test Case Dynamic Behavior**

**Test Case Name** : fddiSMTHoldState_Prm
**Group** : FDDI_MIB/SMT
**Purpose** : Check the initial value of the HoldState. If the initial value is "not_holding" and the Hold function is implemented, interrupt the link exiting from the Tester A port, so that the input to the IUT B port is dark. Verify that now "holding_prm" is the value of the HoldState.
**Default** :
**Comments** : This test case is optional. It is applied only to a DM-DAS where a dual ring is formed with two token paths (primary & secondary) and the Hold function is implemented.

| Nr | Label | Behavior Description | Constraints Ref | Verdict | Comments |
|---|---|---|---|---|---|
| 1 | | +INIT-RING | | | (1) |
| 2 | | !PMF_Frame1 | PMFGetReq_SCC1 | | (2) |
| 3 | | START Timer_30 | | | |
| 4 | L2 | ?PMF_Frame2 | PMFGetResp_SCC1 | | (3) |
| 5 | | !PMF_Frame1 | PMFGetReq_HS1 | | (4) |
| 6 | | START Timer_30 | | | |
| 7 | L1 | ?PMF_Frame2 | PMFGetResp_HS1 | | (5) |
| 8 | | !PMF_Frame1 | PMFGetReq_HS2 | | (6) |
| 9 | | START Timer_30 | | | |
| 10 | L0 | ?PMF_Frame2 | PMFGetResp_HS2 | PASS | (7) |
| 11 | | ?OTHERWISE | | | |
| 12 | | GOTO L0 | | | |
| 13 | | ?TIMEOUT Timer_30 | | FAIL | (8) |
| 14 | | ?OTHERWISE | | | |
| 15 | | GOTO L1 | | | |
| 16 | | ?TIMEOUT Timer_30 | | FAIL | (8) |
| 17 | | ?OTHERWISE | | | |
| 18 | | GOTO L2 | | | |
| 19 | | ?TIMEOUT Timer_30 | | FAIL | (8) |

**Detailed Comments:**

(1) Call the subroutine "INIT_RING" from the RMT ATS to bring the ring up. The ring is operational.
(2) Send a PMF get request frame to check the configuration capabilities of the IUT.
(3) IUT supports the optional Hold function.
(4) Send a PMF get request frame to check the initial value of the HoldState existing in the IUT.
(5) The initial value of HoldState is "not_holding".
(6) Interrupt the link exiting from the Tester A port, so that the input to the IUT B port is dark. Then send a PMF get request frame to check the value of HoldState in the IUT.
(7) Now, the value of Holdstate is "holding_prm".
(8) IUT does not respond within 30 seconds.


Copyright International Organization for Standardization
Provided by IHS under license with ISO
No reproduction or networking permitted without license from IHS
Not for Resale

**Test Case Dynamic Behavior**

**Test Case Name** : fddiSMTHoldState_Sec
**Group** : FDDI_MIB/SMT
**Purpose** : Check the initial value of the HoldState. If the initial value is “not_holding” and the Hold function is implemented, interrupt the link exiting from the Tester B port, so that the input to the IUT A port is dark. Verify that now “holding_sec” is the value of the HoldState.
**Default** :
**Comments** : This test case is optional. It is applied only to a DM-DAS where a dual ring is formed with two token paths (primary & secondary) and the Hold function is implemented.

| Nr | Label | Behavior Description | Constraints Ref | Verdict | Comments |
|---|---|---|---|---|---|
| 1 | | +INIT_RING | | | (1) |
| 2 | | !PMF_Frame1 | PMFGetReq_SCC1 | | (2) |
| 3 | | START Timer_30 | | | |
| 4 | L2 | ?PMF_Frame2 | PMFGetResp_SCC1 | | (3) |
| 5 | | !PMF_Frame1 | PMFGetReq_HS1 | | (4) |
| 6 | | START Timer_30 | | | |
| 7 | L1 | ?PMF_Frame2 | PMFGetResp_HS1 | | (5) |
| 8 | | !PMF_Frame1 | PMFGetReq_HS3 | | (6) |
| 9 | | START Timer_30 | | | |
| 10 | L0 | ?PMF_Frame2 | PMFGetResp_HS3 | PASS | (7) |
| 11 | | ?OTHERWISE | | | |
| 12 | | GOTO L0 | | | |
| 13 | | ?TIMEOUT Timer_30 | | FAIL | (8) |
| 14 | | ?OTHERWISE | | | |
| 15 | | GOTO L1 | | | |
| 16 | | ?TIMEOUT Timer_30 | | FAIL | (8) |
| 17 | | ?OTHERWISE | | | |
| 18 | | GOTO L2 | | | |
| 19 | | ?TIMEOUT Timer_30 | | FAIL | (8) |

**Detailed Comments:**

(1) Call the subroutine “INIT_RING” from the RMT ATS to bring the ring up. The ring is operational.
(2) Send a PMF get request frame to check the configuration capabilities of the IUT.
(3) IUT supports the optional Hold function.
(4) Send a PMF get request frame to check the initial value of the HoldState existing in the IUT.
(5) The initial value of HoldState is “not_holding”.
(6) Interrupt the link exiting from the Tester B port, so that the input to the IUT A port is dark. Then send a PMF get request frame to check the value of HoldState in the IUT.
(7) Now, the value of Holdstate is “holding_sec”.
(8) IUT does not respond within 30 seconds.



Copyright International Organization for Standardization
Provided by IHS under license with ISO
No reproduction or networking permitted without license from IHS
Not for Resale

**Test Case Dynamic Behavior**

**Test Case Name** : fddiSMTStationStatus_T
**Group** : FDDI_MIB/SMT
**Purpose** : Check the current status of the primary and secondary paths within the IUT in the Thru configuration.
**Default** :
**Comments** : This test case is applied to a DM-DAS in PeerDAS connection. Refer to fddiSMTCF_State_T for connection definitions.

| Nr | Label | Behavior Description | Constraints Ref | Verdict | Comments |
|---|---|---|---|---|---|
| 1 | | +INIT_RING | | | (1) |
| 2 | | !PMF_Frame1 | PMFGetReq_Thru2 | | (2) |
| 3 | | START Timer_30 | | | |
| 4 | L1 | ?PMF_Frame2 | PMFGetResp_Thru2 | | (3) |
| 5 | | !PMF_Frame1 | PMFGetReq_SST | | (4) |
| 6 | | START Timer_30 | | | |
| 7 | L0 | ?PMF_Frame2 | PMFGetResp_SST | PASS | (5) |
| 8 | | ?OTHERWISE | | | |
| 9 | | GOTO L0 | | | |
| 10 | | ?TIMEOUT Timer_30 | | FAIL | (6) |
| 11 | | ?OTHERWISE | | | |
| 12 | | GOTO L1 | | | |
| 13 | | ?TIMEOUT Timer_30 | | FAIL | (6) |

**Detailed Comments:**

(1) Call the subroutine “INIT_RING” from the RMT ATS to bring the ring up. The ring is operational.
(2) Send a PMF get request frame to check the CF_State of the IUT in Thru configuration.
(3) The CF_State of the IUT is “thru”.
(4) Send a PMF get request frame to check the current status of the primary and secondary paths within the IUT in the Thru configuration
(5) The current station status is “thru”.
(6) IUT does not respond within 30 seconds.


Copyright International Organization for Standardization
Provided by IHS under license with ISO
No reproduction or networking permitted without license from IHS
Not for Resale

**Test Case Dynamic Behavior**

**Test Case Name** : fddiSMTStationStatus_S1
**Group** : FDDI_MIB/SMT
**Purpose** : Check the current status of the primary and secondary paths within the IUT in the wrap_a configuration.
**Default** :
**Comments** : This test case is applied to a DM-DAS in PeerWrpA or TreeWrpA connection. Refer to fddiSMTCF_State_T for connection definitions.

| Nr | Label | Behavior Description | Constraints Ref | Verdict | Comments |
|---|---|---|---|---|---|
| 1 | | +INIT_RING | | | (1) |
| 2 | | !PMF_Frame1 | PMFGetReq_WRPA | | (2) |
| 3 | | START Timer_30 | | | |
| 4 | L1 | ?PMF_Frame2 | PMFGetResp_WRPA | | (3) |
| 5 | | !PMF_Frame1 | PMFGetReq_SSS1 | | (4) |
| 6 | | START Timer_30 | | | |
| 7 | L0 | ?PMF_Frame2 | PMFGetResp_SSS1 | PASS | (5) |
| 8 | | ?OTHERWISE | | | |
| 9 | | GOTO L0 | | | |
| 10 | | ?TIMEOUT Timer_30 | | FAIL | (6) |
| 11 | | ?OTHERWISE | | | |
| 12 | | GOTO L1 | | | |
| 13 | | ?TIMEOUT Timer_30 | | FAIL | (6) |

**Detailed Comments:**

(1) Call the subroutine “INIT_RING” from the RMT ATS to bring the ring up. The ring is operational.
(2) Send a PMF get request frame to check the CF_State of the IUT in wrap_a configuration.
(3) The CF_State of the IUT is “wrap_a”.
(4) Send a PMF get request frame to check the current status of the primary and secondary paths within the IUT in the wrap_a configuration
(5) The current station status is “separated”.
(6) IUT does not respond within 30 seconds.



Copyright International Organization for Standardization
Provided by IHS under license with ISO
No reproduction or networking permitted without license from IHS
Not for Resale

**Test Case Dynamic Behavior**

**Test Case Name** : fddiSMTStationStatus_S2
**Group** : FDDI_MIB/SMT
**Purpose** : Check the current status of the primary and secondary paths within the IUT in the wrap_b configuration.
**Default** :
**Comments** : This test case is applied to a DM-DAS in PeerWrpB or TreeWrpB connection. Refer to fddiSMTCF_State_T for connection definitions.

| Nr | Label | Behavior Description | Constraints Ref | Verdict | Comments |
|---|---|---|---|---|---|
| 1 | | +INIT_RING | | | (1) |
| 2 | | !PMF_Frame1 | PMFGetReq_WRPB | | (2) |
| 3 | | START Timer_30 | | | |
| 4 | L1 | ?PMF_Frame2 | PMFGetResp_WRPB | | (3) |
| 5 | | !PMF_Frame1 | PMFGetReq_SSS2 | | (4) |
| 6 | | START Timer_30 | | | |
| 7 | L0 | ?PMF_Frame2 | PMFGetResp_SSS2 | PASS | (5) |
| 8 | | ?OTHERWISE | | | |
| 9 | | GOTO L0 | | | |
| 10 | | ?TIMEOUT Timer_30 | | FAIL | (6) |
| 11 | | ?OTHERWISE | | | |
| 12 | | GOTO L1 | | | |
| 13 | | ?TIMEOUT Timer_30 | | FAIL | (6) |

**Detailed Comments:**

(1) Call the subroutine “INIT_RING” from the RMT ATS to bring the ring up. The ring is operational.
(2) Send a PMF get request frame to check the CF_State of the IUT in wrap_b configuration.
(3) The CF_State of the IUT is “wrap_b”.
(4) Send a PMF get request frame to check the current status of the primary and secondary paths within the IUT in the wrap_b configuration
(5) The current station status is “separated”.
(6) IUT does not respond within 30 seconds.


Copyright International Organization for Standardization
Provided by IHS under license with ISO
No reproduction or networking permitted without license from IHS
Not for Resale

**Test Case Dynamic Behavior**

**Test Case Name** : fddiSMTStationStatus_C
**Group** : FDDI_MIB/SMT
**Purpose** : Check the current status of the primary and secondary paths within the IUT in the c_wrap_a configuration.
**Default** :
**Comments** : This test case is applied to a SM-DAS in PeerWrpA or TreeWrpA connection. Refer to fddiSMTCF_State_T for connection definitions.

| Nr | Label | Behavior Description | Constraints Ref | Verdict | Comments |
|---|---|---|---|---|---|
| 1 | | +INIT_RING | | | (1) |
| 2 | | !PMF_Frame1 | PMFGetReq_CWRPA | | (2) |
| 3 | | START Timer_30 | | | |
| 4 | L1 | ?PMF_Frame2 | PMFGetResp_CWRPA | | (3) |
| 5 | | !PMF_Frame1 | PMFGetReq_SSC | | (4) |
| 6 | | START Timer_30 | | | |
| 7 | L0 | ?PMF_Frame2 | PMFGetResp_SSC | PASS | (5) |
| 8 | | ?OTHERWISE | | | |
| 9 | | GOTO L0 | | | |
| 10 | | ?TIMEOUT Timer_30 | | FAIL | (6) |
| 11 | | ?OTHERWISE | | | |
| 12 | | GOTO L1 | | | |
| 13 | | ?TIMEOUT Timer_30 | | FAIL | (6) |

**Detailed Comments:**

(1) Call the subroutine “INIT_RING” from the RMT ATS to bring the ring up. The ring is operational.
(2) Send a PMF get request frame to check the CF_State of the IUT in c_wrap_a configuration.
(3) The CF_State of the IUT is “c_wrap_a”.
(4) Send a PMF get request frame to check the current status of the primary and secondary paths within the IUT in the c_wrap_a configuration
(5) The current station status is “concatenated”.
(6) IUT does not respond within 30 seconds.



Copyright International Organization for Standardization
Provided by IHS under license with ISO
No reproduction or networking permitted without license from IHS
Not for Resale

**Test Case Dynamic Behavior**

**Test Case Name** : fddiSMTPeerWrapFlag_DAS
**Group** : FDDI_MIB/SMT
**Purpose** : Check the value of PeerWrapFlag for different configurations.
**Default** :
**Comments** : This test case is applied to a DAS with PeerWrpA then PeerDAS connection. Refer to fddiSMTCF_State_T for connection definitions.

| Nr | Label | Behavior Description | Constraints Ref | Verdict | Comments |
|---|---|---|---|---|---|
| 1 | | +INIT_RING | | | (1) |
| 2 | | !PMF_Frame1 | PMFGetReq_PWF1 | | (2) |
| 3 | | START Timer_30 | | | |
| 4 | L1 | ?PMF_Frame2 | PMFGetResp_PWF1 | | (3) |
| 5 | | !PMF_Frame1 | PMFGetReq_PWF2 | | (4) |
| 6 | | START Timer_30 | | | |
| 7 | L0 | ?PMF_Frame2 | PMFGetResp_PWF2 | PASS | (5) |
| 8 | | ?OTHERWISE | | | |
| 9 | | GOTO L0 | | | |
| 10 | | ?TIMEOUT Timer_30 | | FAIL | (6) |
| 11 | | ?OTHERWISE | | | |
| 12 | | GOTO L1 | | | |
| 13 | | ?TIMEOUT Timer_30 | | FAIL | (6) |

**Detailed Comments:**

(1) Apply PeerWrpA connection to IUT. Call the subroutine “INIT_RING” from the RMT ATS to bring the ring up. The ring is operational.
(2) Send a PMF get request frame to check the value of PeerWrapFlag in the IUT.
(3) The value of the PeerWrapFlag is “set” for the PeerWrpA connection.
(4) Now, apply PeerDAS connection to IUT. Check the value of PeerWrapFlag for this connection.
(5) The value of the PeerWrapFlag is “clear” for the PeerDAS connection.
(6) IUT does not respond within 30 seconds.


Copyright International Organization for Standardization
Provided by IHS under license with ISO
No reproduction or networking permitted without license from IHS
Not for Resale

**Test Case Dynamic Behavior**

**Test Case Name** : fddiSMTPeerWrapFlag_SAS
**Group** : FDDI_MIB/SMT
**Purpose** : Check the value of PeerWrapFlag for different configurations.
**Default** :
**Comments** : This test case is applied to a SAS with PeerSA then TreeSM connection. Refer to fddiSMTCF_State_T for connection definitions.

| Nr | Label | Behavior Description | Constraints Ref | Verdict | Comments |
|---|---|---|---|---|---|
| 1 | | +INIT_RING | | | (1) |
| 2 | | !PMF_Frame1 | PMFGetReq_PWF3 | | (2) |
| 3 | | START Timer-30 | | | |
| 4 | L1 | ?PMF_Frame2 | PMFGetResp_PWF3 | | (3) |
| 5 | | !PMF_Frame1 | PMFGetReq_PWF4 | | (4) |
| 6 | | START Timer_30 | | | |
| 7 | L0 | ?PMF_Frame2 | PMFGetResp_PWF4 | PASS | (5) |
| 8 | | ?OTHERWISE | | | |
| 9 | | GOTO L0 | | | |
| 10 | | ?TIMEOUT Timer_30 | | FAIL | (6) |
| 11 | | ?OTHERWISE | | | |
| 12 | | GOTO L1 | | | |
| 13 | | ?TIMEOUT Timer_30 | | FAIL | (6) |

**Detailed Comments:**

(1) Apply PeerSA connection to IUT. Call the subroutine “INIT_RING” from the RMT ATS to bring the ring up. The ring is operational.
(2) Send a PMF get request frame to check the value of PeerWrapFlag in the IUT.
(3) The value of the PeerWrapFlag is “set” for the PeerSA connection.
(4) Now, apply TreeSM connection to IUT. Check the value of PeerWrapFlag for this connection.
(5) The value of the PeerWrapFlag is “clear” for the TreeSM connection.
(6) IUT does not respond within 30 seconds.

**Test Case Dynamic Behavior**

**Test Case Name** : fddiMACBridgeFunctions
**Group** : FDDI_MIB/MAC
**Purpose** : Verify the bridge type of the IUT.
**Default** :
**Comments** : Assume that IUT is SM-DAS. This test case is optional and performed only if hardware present.

| Nr | Label | Behavior Description | Constraints Ref | Verdict | Comments |
|---|---|---|---|---|---|
| 1 | | +INIT_RING | | | (1) |
| 2 | | !PMF_Frame1 | PMFGetReq_MBF | | (2) |
| 3 | | START Timer_30 | | | |
| 4 | L0 | ?PMF_Frame2 | PMFGetResp_MBF | PASS | (3) |
| 5 | | ?OTHERWISE | | | |
| 6 | | GOTO L0 | | | |
| 7 | | ?TIMEOUT Timer_30 | | FAIL | (4) |

**Detailed Comments:**

(1) Call the subroutine “INIT_RING” from the RMT ATS to bring the ring up. The ring is operational.
(2) Tester sends a PMF get request to inquire the fddiMACBridgeFunctions attribute contained in the IUT.
(3) IUT responds with its BridgeFunctionType as entered into the PIXIT proforma.
(4) IUT does not respond within 30 seconds.



Copyright International Organization for Standardization
Provided by IHS under license with ISO
No reproduction or networking permitted without license from IHS
Not for Resale

| Test Case Dynamic Behavior | | | | | |
|---|---|---|---|---|---|
| **Test Case Name** : fddiMACT_MaxCapability<br>**Group** : FDDI_MIB/MAC<br>**Purpose** : Verify the maximum T_Max value of an IUT's MAC.<br>**Default** :<br>**Comments** : Assume that IUT is SM-DAS. This test is mandatory if hardware present. | | | | | |
| **Nr** | **Label** | **Behavior Description** | **Constraints Ref** | **Verdict** | **Comments** |
| 1 | | +INIT_RING | | | (1) |
| 2 | | !PMF_Frame1 | PMFGetReq_TMC | | (2) |
| 3 | | START Timer_30 | | | |
| 4 | L0 | ?PMF_Frame2 | PMFGetResp_TMC | PASS | (3) |
| 5 | | ?OTHERWISE | | | |
| 6 | | GOTO L0 | | | |
| 7 | | ?TIMEOUT Timer_30 | | FAIL | (4) |
| **Detailed Comments:**<br>(1) Call the subroutine "INIT_RING" from the RMT ATS to bring the ring up. The ring is operational.<br>(2) Tester sends a PMF get request to inquire the fddiMACT_MaxCapability attribute contained in the IUT.<br>(3) IUT responds with its MACT_Max time value as entered into the PIXIT proforma.<br>(4) IUT does not respond within 30 seconds. | | | | | |

| Test Case Dynamic Behavior | | | | | |
|---|---|---|---|---|---|
| **Test Case Name** : fddiMACTVXCapability<br>**Group** : FDDI_MIB/MAC<br>**Purpose** : Verify the maximum TVX time value of an IUT's MAC.<br>**Default** :<br>**Comments** : Assume that IUT is SM-DAS. This test is mandatory if hardware present. | | | | | |
| **Nr** | **Label** | **Behavior Description** | **Constraints Ref** | **Verdict** | **Comments** |
| 1 | | +INIT_RING | | | (1) |
| 2 | | !PMF_Frame1 | PMFGetReq_TVXC | | (2) |
| 3 | | START Timer_30 | | | |
| 4 | L0 | ?PMF_Frame2 | PMFGetresp_TVXC | PASS | (3) |
| 5 | | ?OTHERWISE | | | |
| 6 | | GOTO L0 | | | |
| 7 | | ?TIMEOUT Timer_30 | | FAIL | (4) |
| **Detailed Comments:**<br>(1) Call the subroutine "INIT_RING" from the RMT ATS to bring the ring up. The ring is operational.<br>(2) Tester sends a PMF get request to inquire the fddiMACTVXCapability attribute contained in the IUT.<br>(3) IUT responds with its MACTVX time value as entered into the PIXIT proforma.<br>(4) IUT does not respond within 30 seconds. | | | | | |


Copyright International Organization for Standardization
Provided by IHS under license with ISO
No reproduction or networking permitted without license from IHS
Not for Resale

| Test Case Dynamic Behavior | | | | | |
|---|---|---|---|---|---|
| **Test Case Name** : fddiMACAvailablePaths<br>**Group** : FDDI_MIB/MAC<br>**Purpose** : Verify paths available for an IUT's MAC.<br>**Default** :<br>**Comments** : Assume that IUT is SM-DAS. This test case is mandatory if hardware present. | | | | | |
| **Nr** | **Label** | **Behavior Description** | **Constraints Ref** | **Verdict** | **Comments** |
| 1 | | +INIT_RING | | | (1) |
| 2 | | !PMF_Frame1 | PMFGetReq_MAP | | (2) |
| 3 | | START Timer_30 | | | |
| 4 | L0 | ?PMF_Frame2 | PMFGetResp_MAP | PASS | (3) |
| 5 | | ?OTHERWISE | | | |
| 6 | | GOTO L0 | | | |
| 7 | | ?TIMEOUT Timer_30 | | FAIL | (4) |
| **Detailed Comments:**<br>(1) Call the subroutine "INIT_RING" from the RMT ATS to bring the ring up. The ring is operational.<br>(2) Tester sends a PMF get request to inquire the fddiMACAvailablePaths attribute contained in the IUT.<br>(3) IUT responds with paths available for its MAC.<br>(4) IUT does not respond within 30 seconds. | | | | | |

| Test Case Dynamic Behavior | | | | | |
|---|---|---|---|---|---|
| **Test Case Name** : fddiMACCurrentPath<br>**Group** : FDDI_MIB/MAC<br>**Purpose** : Verify the path into which an IUT's MAC is currently inserted.<br>**Default** :<br>**Comments** : Assume that IUT is SM-DAS. This test case is mandatory if hardware present. | | | | | |
| **Nr** | **Label** | **Behavior Description** | **Constraints Ref** | **Verdict** | **Comments** |
| 1 | | +INIT_RING | | | (1) |
| 2 | | !PMF_Frame1 | PMFGetReq_MCP | | (2) |
| 3 | | START Timer_30 | | | |
| 4 | L0 | ?PMF_Frame2 | PMFGetResp_MCP | PASS | (3) |
| 5 | | ?OTHERWISE | | | |
| 6 | | GOTO L0 | | | |
| 7 | | ?TIMEOUT Timer_30 | | FAIL | (4) |
| **Detailed Comments:**<br>(1) Call the subroutine "INIT_RING" from the RMT ATS to bring the ring up. The ring is operational.<br>(2) Tester sends a PMF get request to inquire the fddiMACCurrentPath attribute contained in the IUT.<br>(3) IUT responds with the path into which its MAC is currently inserted.<br>(4) IUT does not respond within 30 seconds. | | | | | |



Copyright International Organization for Standardization
Provided by IHS under license with ISO
No reproduction or networking permitted without license from IHS
Not for Resale

**Test Case Dynamic Behavior**

**Test Case Name** : fddiMACUpstreamNbr
**Group** : FDDI_MIB/MAC
**Purpose** : To compare fddiMACUpstreamNbr with a known upstream neighbor address.
**Default** :
**Comments** : Assume tester is a single MAC dual attachment station. This test case is mandatory if hardware present.

Note: NIF frame has been tested in the FBM ATS.

| Nr | Label | Behavior Description | Constraints Ref | Verdict | Comments |
|---|---|---|---|---|---|
| 1 | | +INIT_RING | | | (1) |
| 2 | | !NIF_Frame | NIF_TSTR_Req | | (2) |
| 3 | | START Timer_30 | | | |
| 4 | L1 | ?NIF_Frame | NIF_IUT_Resp | | (3) |
| 5 | | !PMF_Frame1 | PMFGetReq_UNA | | (4) |
| 6 | | START Timer_30 | | | |
| 7 | L0 | ?PMF_Frame2 | PMFGetResp_UNA | PASS | (5) |
| 8 | | ?PMF_Frame2 | PMFGetResp_UNK1 | FAIL | (6) |
| 9 | | ?OTHERWISE | | | |
| 10 | | GOTO L0 | | | |
| 11 | | ?TIMEOUT Timer_30 | | FAIL | (7) |
| 12 | | ?OTHERWISE | | | |
| 13 | | GOTO L1 | | | |
| 14 | | ?TIMEOUT Timer_30 | | FAIL | (7) |

**Detailed Comments:**

(1) Call the subroutine “INIT_RING” from the RMT ATS to bring the ring up. The ring is operational.
(2) Tester sends a NIF request frame with DA=Broadcast to announce its presence to the downstream neighbor.
(3) Receive NIF response frame with UNA=TESTER_ADDRESS from the IUT.
(4) Tester sends a PMF get request frame to inquire the fddiMACUpstream_Nbr attribute of the IUT.
(5) Receive NIF response frame with MACUpstreamNbr address of TESTER_ADDRESS from the IUT.
(6) Receive NIF response frame with MACUpstreamNbr address of SMT_Unknown_Address from the IUT.
(7) IUT does not respond within 30 seconds.


Copyright International Organization for Standardization
Provided by IHS under license with ISO
No reproduction or networking permitted without license from IHS
Not for Resale

**Test Case Dynamic Behavior**

**Test Case Name** : fddiMACDownstreamNbr
**Group** : FDDI_MIB/MAC
**Purpose** : To compare fddiMACDownstreamNbr with a known downstream neighbor address. This test case is optional.
**Default** :
**Comments** : Assume tester is a single MAC dual attachment station. This test case is mandatory if hardware present.
Note: NIF frame has been tested in the FBM ATS.

| Nr | Label | Behavior Description | Constraints Ref | Verdict | Comments |
|---|---|---|---|---|---|
| 1 | | +INIT_RING | | | (1) |
| 2 | | START Timer_60 | | | |
| 3 | L2 | ?NIF_Frame | NIF_IUT_Req | | (2) |
| 4 | | !NIF_Frame | NIF_TSTR_Resp | | (3) |
| 5 | | START Timer_30 | | | |
| 6 | L1 | ?TIMEOUT Timer_30 | | | (4) |
| 7 | | !PMF_Frame1 | PMFGetReq_DNA | | (5) |
| 8 | | START Timer_30 | | | |
| 9 | L0 | ?PMF_Frame2 | PMFGetResp_DNA | PASS | (6) |
| 10 | | ?PMF_Frame2 | PMFGetResp_UNK2 | INCONC | (7) |
| 11 | | ?OTHERWISE | | | |
| 12 | | GOTO L0 | | | |
| 13 | | ?TIMEOUT Timer_30 | | FAIL | (8) |
| 14 | | ?NIF_Frame | NIF_IUT_Req | | |
| 15 | | GOTO L1 | | | |
| 16 | | ?OTHERWISE | | | |
| 17 | | GOTO L1 | | | |
| 18 | | ?OTHERWISE | | | |
| 19 | | GOTO L2 | | | |
| 20 | | ?TIMEOUT Timer_60 | | FAIL | (9) |

**Detailed Comments:**

(1) Call the subroutine “INIT_RING” from the RMT ATS to bring the ring up. The ring is operational.
(2) Wait for a PMF request frame from IUT.
(3) Tester sends a PMF response frame to force IUT to store its downstream neighbor address as TESTER_ADDRESS.
(4) Wait for IUT to store its downstream neighbor address.
(5) Tester sends a PMF get request frame to check the stored downstream neighbor address of the IUT.
(6) IUT stores its downstream neighbor address as TESTER-ADDRESS.
(7) IUT did not update its downstream neighbor address. This action is implementer's optional function.
(8) IUT does not respond within 30 seconds.
(9) IUT does not send a NIF request frame within 60 seconds.



Copyright International Organization for Standardization
Provided by IHS under license with ISO
No reproduction or networking permitted without license from IHS
Not for Resale

**Test Case Dynamic Behavior**

**Test Case Name** : fddiMACOldUpstreamNbr
**Group** : FDDI_MIB/MAC
**Purpose** : Verify the previous known upstream neighbor of the IUT.
**Default** :
**Comments** : Assume IUT is a SM-DAS. This test case is mandatory if hardware present.

| Nr | Label | Behavior Description | Constraints Ref | Verdict | Comments |
|---|---|---|---|---|---|
| 1 | | +INIT_RING | | | (1) |
| 2 | | !NIF_Frame | NIF_TSTR_Req | | (2) |
| 3 | | START Timer_30 | | | |
| 4 | L2 | ?NIF_Frame | NIF_IUT_Resp | | (3) |
| 5 | | START Timer_TVU | | | |
| 6 | L1 | ?TIMEOUT Timer_TVU | | | (4) |
| 7 | | !PMF_Frame1 | PMFGetReq_OUNA | | (5) |
| 8 | | START Timer_30 | | | |
| 9 | L0 | ?PMF_Frame2 | PMFGetResp_OUNA | PASS | (6) |
| 10 | | ?OTHERWISE | | | |
| 11 | | GOTO L0 | | | |
| 12 | | ?TIMEOUT Timer_30 | | FAIL | (7) |
| 13 | | ?OTHERWISE | | | |
| 14 | | GOTO L1 | | | |
| 15 | | ?OTHERWISE | | | |
| 16 | | GOTO L2 | | | |
| 17 | | ?TIMEOUT Timer_30 | | FAIL | (7) |

**Detailed Comments:**

(1) Call the subroutine “INIT_RING” from the RMT ATS to bring the ring up. The ring is operational.
(2) Tester sends a NIF request frame with DA=Broadcast to announce its presence to the downstream neighbor.
(3) Receive NIF response frame with UNA=TESTER_ADDRESS from the IUT.
(4) TVU timer is expired.
(5) Tester sends a PMF get request to inquire the fddiMACOldUpstreamNbr attribute contained in the IUT.
(6) Receive PMF response frame with MACOldUpstreamNbr address of TESTER_ADDRESS.
(7) IUT does not respond within 30 seconds.


Copyright International Organization for Standardization
Provided by IHS under license with ISO
No reproduction or networking permitted without license from IHS
Not for Resale

**Test Case Dynamic Behavior**

**Test Case Name** : fddiMACOldDownstreamNbr
**Group** : FDDI_MIB/MAC
**Purpose** : Verify the previous known downstream neighbor of the IUT.
**Default** :
**Comments** : Assume IUT is a SM-DAS. This test case is mandatory if hardware present.

| Nr | Label | Behavior Description | Constraints Ref | Verdict | Comments |
|---|---|---|---|---|---|
| 1 | | +INIT_RING | | | (1) |
| 2 | | START Timer_60 | | | |
| 3 | L2 | ?NIF_Frame | NIF_IUT_Req | | (2) |
| 4 | | !NIF_Frame | NIF_TSTR_Resp | | (3) |
| 5 | | START Timer_TVD | | | |
| 6 | L0 | ?TIMEOUT Timer_TVD | | | (4) |
| 7 | | !PMF_Frame1 | PMFGetReq_ODNA | | (5) |
| 8 | | START Timer_30 | | | |
| 9 | L1 | ?PMF_Frame2 | PMFGetResp_ODNA | PASS | (6) |
| 10 | | ?OTHERWISE | | | |
| 11 | | GOTO L0 | | | |
| 12 | | ?TIMEOUT Timer_30 | | FAIL | (7) |
| 13 | | ?NIF_Frame | NIF_IUT_Req | | |
| 14 | | GOTO L1 | | | |
| 15 | | ?OTHERWISE | | | |
| 16 | | GOTO L1 | | | |
| 17 | | ?OTHERWISE | | | |
| 18 | | GOTO L2 | | | |
| 19 | | ?TIMEOUT Timer_60 | | FAIL | (8) |

**Detailed Comments:**

(1) Call the subroutine “INIT_RING” from the RMT ATS to bring the ring up. The ring is operational.
(2) Receive NIF request frame from the IUT.
(3) Tester sends NIF response frame to the IUT.
(4) Timer_TVD is expired.
(5) Tester sends a PMF get request frame to inquire the MACOldDownstreamNbr attribute of the IUT.
(6) Receive IUT’s fddiMACOldDownstreamNbr attribute with MACOldDownstreamNbr address of TESTER_ADDRESS.
(7) IUT does not respond within 30 seconds.
(8) IUT does not send NIF request frame within 60 seconds.



Copyright International Organization for Standardization
Provided by IHS under license with ISO
No reproduction or networking permitted without license from IHS
Not for Resale

**Test Case Dynamic Behavior**

**Test Case Name** : fddiMACDupAddressTest1
**Group** : FDDI_MIB/MAC
**Purpose** : Verify the MACDupAddressTest of the IUT when there is no duplicate address on the ring.
**Default** :
**Comments** : Assume IUT is a SM-DAS. This test case is mandatory if hardware present.

| Nr | Label | Behavior Description | Constraints Ref | Verdict | Comments |
|---|---|---|---|---|---|
| 1 | | +INIT_RING | | | (1) |
| 2 | | START Timer_60 | | | |
| 3 | L2 | ?NIF_Frame | NIF_IUT_Req | | (2) |
| 4 | | !NIF_Frame | NIF_TSTR_Resp | | (3) |
| 5 | | START Timer_30 | | | |
| 6 | L1 | ?TIMEOUT Timer_30 | | | (4) |
| 7 | | !PMF_Frame1 | PMFGetReq_MDAT1 | | (5) |
| 8 | | START Timer_30 | | | |
| 9 | L0 | ?PMF_Frame2 | PMFGetResp_MDAT1 | PASS | (6) |
| 10 | | ?OTHERWISE | | | |
| 11 | | GOTO L0 | | | |
| 12 | | ?TIMEOUT Timer_30 | | FAIL | (7) |
| 13 | | ?NIF_Frame | NIF_IUT_Req | | |
| 14 | | GOTO L1 | | | |
| 15 | | ?OTHERWISE | | | |
| 16 | | GOTO L1 | | | |
| 17 | | ?OTHERWISE | | | |
| 18 | | GOTO L2 | | | |
| 19 | | ?TIMEOUT Timer_60 | | FAIL | (8) |

**Detailed Comments:**

(1) Call the subroutine “INIT_RING” from the RMT ATS to bring the ring up. The ring is operational.
(2) Receive NIF request frame from the IUT.
(3) Tester sends a NIF response frame with reception_status of FR_GOOD, E=R, A=R and C=R/S to indicate that the fddiMACSMTAddress is not duplicate on the logical ring.
(4) Wait for the IUT to receive NIF response frame from the Tester.
(5) Tester sends a PMF get request frame to inquire the MACDupAddressTest attribute of the IUT.
(6) Receive IUT’s fddiMACDupAddressTest attribute with Dup_Addr_Test of PASS.
(7) IUT does not respond within 30 seconds.
(8) IUT does not send NIF request frame within 60 seconds.

--`,,```,,,,````-`-`,,`,,`,`,,`---



Copyright International Organization for Standardization
Provided by IHS under license with ISO
No reproduction or networking permitted without license from IHS
Not for Resale

**Test Case Dynamic Behavior**

**Test Case Name** : fddiMACDupAddressTest2
**Group** : FDDI_MIB/MAC
**Purpose** : Verify the MACDupAddressTest of the IUT when there is a duplicate address on the ring.
**Default** :
**Comments** : Assume IUT is a SM-DAS. This test case is mandatory if hardware present.

| Nr | Label | Behavior Description | Constraints Ref | Verdict | Comments |
|---|---|---|---|---|---|
| 1 | | +INIT_RING | | | (1) |
| 2 | | START Timer_60 | | | |
| 3 | L2 | ?NIF_Frame | NIF_IUT_Req | | (2) |
| 4 | | !NIF_Frame | NIF_DUP_Resp | | (3) |
| 5 | | START Timer_30 | | | |
| 6 | L1 | ?TIMEOUT Timer_30 | | | (4) |
| 7 | | !PMF_Frame1 | PMFGetReq_MDAT2 | | (5) |
| 8 | | START Timer_30 | | | |
| 9 | L0 | ?PMF_Frame2 | PMFGetResp_MDAT2 | PASS | (6) |
| 10 | | ?OTHERWISE | | | |
| 11 | | GOTO L0 | | | |
| 12 | | ?TIMEOUT Timer_30 | | FAIL | (7) |
| 13 | | ?NIF_Frame | NIF_IUT_Req | | |
| 14 | | GOTO L1 | | | |
| 15 | | ?OTHERWISE | | | |
| 16 | | GOTO L1 | | | |
| 17 | | ?OTHERWISE | | | |
| 18 | | GOTO L2 | | | |
| 19 | | ?TIMEOUT Timer_60 | | FAIL | (8) |

**Detailed Comments:**

(1) Call the subroutine “INIT_RING” from the RMT ATS to bring the ring up. The ring is operational.
(2) Receive NIF request frame from the IUT.
(3) Tester sends a NIF response frame with reception_status of FR_GOOD, E=R, A=S and C=R/S to indicate that the fddiMACSMTAddress is duplicated on the logical ring.
(4) Wait for the IUT to receive NIF response frame from the Tester.
(5) Tester sends a PMF get request frame to inquire the MACDupAddressTest attribute of the IUT.
(6) Receive IUT’s fddiMACDupAddressTest attribute with Dup_Addr_Test of FAIL.
(7) IUT does not respond within 30 seconds.
(8) IUT does not send NIF request frame within 60 seconds.



Copyright International Organization for Standardization
Provided by IHS under license with ISO
No reproduction or networking permitted without license from IHS
Not for Resale

| Test Case Dynamic Behavior | | | | | |
|---|---|---|---|---|---|
| **Test Case Name** : fddiMACRequestedPaths<br>**Group** : FDDI_MIB/MAC<br>**Purpose** : Verify that the fddiMACRequestedPaths attribute of the IUT can be modified using the PMF set protocol.<br>**Default** :<br>**Comments** : Assume IUT is a SM-DAS in a Thru configuration. | | | | | |
| **Nr** | **Label** | **Behavior Description** | **Constraints Ref** | **Verdict** | **Comments** |
| 1 | | +INIT_RING | | | (1) |
| 2 | | !PMF_Frame1 | PMFGetReq_MRP | | (2) |
| 3 | | START Timer_30 | | | |
| 4 | L1 | ?PMF_Frame2 | PMFGetResp_MRP | | (3) |
| 5 | | !PMF_Frame3 | PMFSetReq_MRP | | (4) |
| 6 | | START Timer_30 | | | |
| 7 | L0 | ?PMF_Frame4 | PMFSetresp_MRP | PASS | (5) |
| 8 | | ?OTHERWISE | | | |
| 9 | | GOTO L0 | | | |
| 10 | | ?TIMEOUT Timer_30 | | FAIL | (6) |
| 11 | | ?OTHERWISE | | | |
| 12 | | GOTO L1 | | | |
| 13 | | ?TIMEOUT Timer_30 | | FAIL | (6) |
| **Detailed Comments:**<br>(1) Call the subroutine “INIT_RING” from the RMT ATS to bring the ring up. The ring is operational.<br>(2) Tester sends a PMF get request to inquire the MACRequestedPaths attribute of the IUT.<br>(3) IUT responds with its MACRequestedPaths value (default value).<br>(4) Tester sends a PMF set request to modify the MACRequestedPaths of the IUT.<br>(5) Receive PMF set response with the modified MACRequestedPaths as requested from the IUT.<br>(6) IUT does not respond within 30 seconds. | | | | | |

| Test Case Dynamic Behavior | | | | | |
|---|---|---|---|---|---|
| **Test Case Name** : fddiMACDownstreamPORTType<br>**Group** : FDDI_MIB/MAC<br>**Purpose** : Verify the exit port of an IUT MAC.<br>**Default** :<br>**Comments** : Assume IUT is a SM-DAS in a Thru configuration. This test is mandatory if hardware present. | | | | | |
| **Nr** | **Label** | **Behavior Description** | **Constraints Ref** | **Verdict** | **Comments** |
| 1 | | +INIT_RING | | | (1) |
| 2 | | !PMF_Frame1 | PMFGetReq_MDPT | | (2) |
| 3 | | START Timer_30 | | | |
| 4 | L0 | ?PMF_Frame2 | PMFGetResp_MDPT | PASS | (3) |
| 5 | | ?OTHERWISE | | | |
| 6 | | GOTO L0 | | | |
| 7 | | ?TIMEOUT Timer_30 | | FAIL | (4) |
| **Detailed Comments:**<br>(1) Call the subroutine “INIT_RING” from the RMT ATS to bring the ring up. The ring is operational.<br>(2) Tester sends a PMF get request to inquire the MAC downstream port type of the IUT (SM-DAS).<br>(3) Receive a PMF get response with the exit port of B from the IUT.<br>(4) IUT does not respond within 30 seconds. | | | | | |



Copyright International Organization for Standardization
Provided by IHS under license with ISO
No reproduction or networking permitted without license from IHS
Not for Resale

**Test Case Dynamic Behavior**

**Test Case Name** : fddiMACIndex
**Group** : FDDI_MIB/MAC
**Purpose** : Verify the MACIndex attribute of the IUT.
**Default** :
**Comments** : Assume IUT is a SM-DAS.

| Nr | Label | Behavior Description | Constraints Ref | Verdict | Comments |
|---|---|---|---|---|---|
| 1 | | +INIT_RING | | | (1) |
| 2 | | !PMF_Frame1 | PMFGetReq_MI0 | | (2) |
| 3 | | START Timer_30 | | | |
| 4 | L1 | ?PMF_Frame2 | PMFGetResp_MI0 | | (3) |
| 5 | | !PMF_Frame1 | PMFGetReq_MI1 | | (4) |
| 6 | | START Timer_30 | | | |
| 7 | L0 | ?PMF_Frame2 | PMFGetResp_MI1 | PASS | (5) |
| 8 | | ?OTHERWISE | | | |
| 9 | | GOTO L0 | | | |
| 10 | | ?TIMEOUT Timer_30 | | FAIL | (6) |
| 11 | | ?OTHERWISE | | | |
| 12 | | GOTO L1 | | | |
| 13 | | ?TIMEOUT Timer_30 | | FAIL | (6) |

**Detailed Comments:**

(1) Call the subroutine “INIT_RING” from the RMT ATS to bring the ring up. The ring is operational.
(2) Tester sends a PMF get request with Resource Index of zero to inquire the MAC index of the IUT.
(3) Receive a PMF get response with a list of all instances of the MAC object from the IUT as entered into the PIXIT proforma.
(4) Tester sends a PMF get request with Resource Index of the first instance of the MAC object in the IUT.
(5) Receive a PMF get response with the MAC Index of the first instance value, in the list of comment (3) above, from the IUT.
(6) IUT does not respond within 30 seconds.

**Test Case Dynamic Behavior**

**Test Case Name** : fddiMACSMTAddr
**Group** : FDDI_MIB/MAC
**Purpose** : To compare fddiMACSMTAddress to the source address of the frame received.
**Default** :
**Comments** : Assume IUT is a SM-DAS. This test case is mandatory if hardware present.

| Nr | Label | Behavior Description | Constraints Ref | Verdict | Comments |
|---|---|---|---|---|---|
| 1 | | +INIT_RING | | | (1) |
| 2 | | !PMF_Frame1 | PMFGetReq_MSA | | (2) |
| 3 | | START Timer_30 | | | |
| 4 | L0 | ?PMF_Frame2 | PMFGetResp_MSA | PASS | (3) |
| 5 | | ?OTHERWISE | | | |
| 6 | | GOTO L0 | | | |
| 7 | | ?TIMEOUT Timer_30 | | FAIL | (4) |

**Detailed Comments:**

(1) Call the subroutine “INIT_RING” from the RMT ATS to bring the ring up. The ring is operational.
(2) Tester sends a PMF get request frame to check the address of the MAC used for an SMT frame.
(3) Receive PMF get response frame with the source address matched its MAC address.
(4) IUT does not respond within 30 seconds.



--`,,```,,,,````-`-`,,`,,`,`,,`---
Copyright International Organization for Standardization
Provided by IHS under license with ISO
No reproduction or networking permitted without license from IHS
Not for Resale

**Test Case Dynamic Behavior**

**Test Case Name** : fddiMACLongGrpAddress
**Group** : FDDI_MIB/MAC
**Purpose** : Verify the MAC long group address used by the IUT.
**Default** :
**Comments** : Assume IUT is a SM-DAS. This test case is optional and performed only if hardware present.

| Nr | Label | Behavior Description | Constraints Ref | Verdict | Comments |
|---|---|---|---|---|---|
| 1 | | +INIT_RING | | | (1) |
| 2 | | !PMF_Frame1 | PMFGetReq_MLGA | | (2) |
| 3 | | START Timer_30 | | | |
| 4 | L0 | ?PMF_Frame2 | PMFGetResp_MLGA | PASS | (3) |
| 5 | | ?OTHERWISE | | | |
| 6 | | GOTO L0 | | | |
| 7 | | ?TIMEOUT Timer_30 | | FAIL | (4) |

**Detailed Comments:**

(1) Call the subroutine “INIT_RING” from the RMT ATS to bring the ring up. The ring is operational.
(2) Tester sends a PMF get request frame to check the MAC long group address used by the IUT.
(3) IUT responds with its MAC long group address as entered into the PIXIT proforma.
(4) IUT does not respond within 30 seconds.

**Test Case Dynamic Behavior**

**Test Case Name** : fddiMACShortGrpAddress
**Group** : FDDI_MIB/MAC
**Purpose** : Verify the MAC short group address used by the IUT.
**Default** :
**Comments** : Assume IUT is a SM-DAS. This test case is optional and performed only if hardware present.

| Nr | Label | Behavior Description | Constraints Ref | Verdict | Comments |
|---|---|---|---|---|---|
| 1 | | +INIT_RING | | | (1) |
| 2 | | !PMF_Frame1 | PMFGetReq_MSGA | | (2) |
| 3 | | START Timer_30 | | | |
| 4 | L0 | ?PMF_Frame2 | PMFGetResp_MSGA | PASS | (3) |
| 5 | | ?OTHERWISE | | | |
| 6 | | GOTO L0 | | | |
| 7 | | ?TIMEOUT Timer_30 | | FAIL | (4) |

**Detailed Comments:**

(1) Call the subroutine “INIT_RING” from the RMT ATS to bring the ring up. The ring is operational.
(2) Tester sends a PMF get request frame to check the MAC short group address used by the IUT.
(3) IUT responds with its MAC short group address as entered into the PIXIT proforma.
(4) IUT does not respond within 30 seconds.


Copyright International Organization for Standardization
Provided by IHS under license with ISO
No reproduction or networking permitted without license from IHS
Not for Resale

**Test Case Dynamic Behavior**

**Test Case Name** : fddiMACT_Req
**Group** : FDDI_MIB/MAC
**Purpose** : Verify the T_Req value passed to the IUT MAC.
**Default** :
**Comments** : Assume IUT is a SM-DAS. This test case is mandatory if hardware present.

| Nr | Label | Behavior Description | Constraints Ref | Verdict | Comments |
|---|---|---|---|---|---|
| 1 | | +INIT_RING | | | (1) |
| 2 | | !PMF_Frame1 | PMFGetReq_MT_Req | | (2) |
| 3 | | START Timer_30 | | | |
| 4 | L0 | ?PMF_Frame2 | PMFGetResp_MT_Req | PASS | (3) |
| 5 | | ?OTHERWISE | | | |
| 6 | | GOTO L0 | | | |
| 7 | | ?TIMEOUT Timer_30 | | FAIL | (4) |

**Detailed Comments:**

(1) Call the subroutine “INIT_RING” from the RMT ATS to bring the ring up. The ring is operational.
(2) Tester sends a PMF get request frame to inquire the T_Req passed to the IUT MAC.
(3) IUT responds with T_Req of HIGHER_T_BID, passed to its MAC. Note that the HIGHER_T_BID was the T_Bid of the tester which won the claim process and initialized the ring. Refer to “INIT_BID” test step, called in the “INIT_RING” from the RMT ATS, for HIGHER_T_BID value.
(4) IUT does not respond within 30 seconds.

**Test Case Dynamic Behavior**

**Test Case Name** : fddiMACT_Neg
**Group** : FDDI_MIB/MAC
**Purpose** : Verify the T_Neg value of the IUT.
**Default** :
**Comments** : Assume IUT is a SM-DAS. This test case is mandatory if hardware present.

| Nr | Label | Behavior Description | Constraints Ref | Verdict | Comments |
|---|---|---|---|---|---|
| 1 | | +INIT_RING | | | (1) |
| 2 | | !PMF_Frame1 | PMFGetReq_MT_Neg | | (2) |
| 3 | | START Timer_30 | | | |
| 4 | L0 | ?PMF_Frame2 | PMFGetResp_MT_Neg | PASS | (3) |
| 5 | | ?OTHERWISE | | | |
| 6 | | GOTO L0 | | | |
| 7 | | ?TIMEOUT Timer_30 | | FAIL | (4) |

**Detailed Comments:**

(1) Call the subroutine “INIT_RING” from the RMT ATS to bring the ring up. The ring is operational.
(2) Tester sends a PMF get request frame to inquire the T_Neg of the IUT.
(3) IUT responds with T_Neg of HIGHER_T_BID. Note that the HIGHER_T_BID was the T_Bid, also T_Neg, of the tester which won the claim process and initialized the ring. Refer to “INIT_BID” test step, called in the “INIT_RING” from the RMT ATS, for HIGHER_T_BID value.
(4) IUT does not respond within 30 seconds.



Copyright International Organization for Standardization
Provided by IHS under license with ISO
No reproduction or networking permitted without license from IHS
Not for Resale

| Test Case Dynamic Behavior | | | | | |
|---|---|---|---|---|---|
| **Test Case Name** : fddiMACT_Max<br>**Group** : FDDI_MIB/MAC<br>**Purpose** : Verify the T_Max value passed to the IUT MAC.<br>**Default** :<br>**Comments** : Assume IUT is a SM-DAS. This test case is mandatory if hardware present. | | | | | |
| **Nr** | **Label** | **Behavior Description** | **Constraints Ref** | **Verdict** | **Comments** |
| 1 | | +INIT_RING | | | (1) |
| 2 | | !PMF_Frame1 | PMFGetReq_MT_Max | | (2) |
| 3 | | START Timer_30 | | | |
| 4 | L0 | ?PMF_Frame2<br>[165<=TSTR_T_Max<IUT_T_Max] | PMFGetResp_MT_Max | PASS | (3) |
| 5 | | ?OTHERWISE | | | |
| 6 | | GOTO L0 | | | |
| 7 | | ?TIMEOUT Timer_30 | | FAIL | (4) |
| **Detailed Comments:**<br>(1) Call the subroutine “INIT_RING” from the RMT ATS to bring the ring up. The ring is operational.<br>(2) Tester sends a PMF get request frame to inquire the T_Max of the IUT MAC.<br>(3) IUT responds with T_Max of TSTR_T_Max, T_Max of the tester MAC. The TSTR_T_Max was passed to the IUT MAC during the initialization of the ring (INIT_RING).<br>(4) IUT does not respond within 30 seconds. | | | | | |

| Test Case Dynamic Behavior | | | | | |
|---|---|---|---|---|---|
| **Test Case Name** : fddiMACTvxValue<br>**Group** : FDDI_MIB/MAC<br>**Purpose** : Verify the TvxValue passed to the IUT MAC.<br>**Default** :<br>**Comments** : Assume IUT is a SM-DAS. This test case is mandatory if hardware present. | | | | | |
| **Nr** | **Label** | **Behavior Description** | **Constraints Ref** | **Verdict** | **Comments** |
| 1 | | +INIT_RING | | | (1) |
| 2 | | !PMF_Frame1 | PMFGetReq_MTvx | | (2) |
| 3 | | START Timer_30 | | | |
| 4 | L0 | ?PMF_Frame2<br>[2.5<=TSTR_TvxValue<=IUT_TvxValue] | PMFGetResp_MTvx | PASS | (3) |
| 5 | | ?OTHERWISE | | | |
| 6 | | GOTO L0 | | | |
| 7 | | ?TIMEOUT Timer_30 | | FAIL | (4) |
| **Detailed Comments:**<br>(1) Call the subroutine “INIT_RING” from the RMT ATS to bring the ring up. The ring is operational.<br>(2) Tester sends a PMF get request frame to inquire the TvxValue of the IUT MAC.<br>(3) IUT responds with TvxValue of TSTR_TvxValue, TvxValue of the tester MAC. The TSTR_TvxValue is passed to the IUT MAC from the tester MAC on the ring.<br>(4) IUT does not respond within 30 seconds. | | | | | |



Copyright International Organization for Standardization
Provided by IHS under license with ISO
No reproduction or networking permitted without license from IHS
Not for Resale

| Test Case Dynamic Behavior | | | | | |
|---|---|---|---|---|---|
| **Test Case Name** : fddiMACT_Pri0<br>**Group** : FDDI_MIB/MAC<br>**Purpose** : Verify the T_Pri0 value of the IUT MAC.<br>**Default** :<br>**Comments** : Assume IUT is a SM-DAS. This test case is optional and performed only if IUT supports priority function whose hardware is present. | | | | | |
| **Nr** | **Label** | **Behavior Description** | **Constraints Ref** | **Verdict** | **Comments** |
| 1 | | +INIT_RING | | | (1) |
| 2 | | !PMF_Frame1 | PMFGetReq_MT_Pri0 | | (2) |
| 3 | | START Timer_30 | | | |
| 4 | L0 | ?PMF_Frame2 [4<=T_Pri0<=165] | PMFGetResp_MT_Pri0 | PASS | (3) |
| 5 | | ?OTHERWISE | | | |
| 6 | | GOTO L0 | | | |
| 7 | | ?TIMEOUT Timer_30 | | FAIL | (4) |
| **Detailed Comments:**<br>(1) Call the subroutine “INIT_RING” from the RMT ATS to bring the ring up. The ring is operational.<br>(2) Tester sends a PMF get request frame to inquire the T_Pri0 of the IUT.<br>(3) IUT responds with its T_Pri0 as entered into the PIXIT proforma.<br>(4) IUT does not respond within 30 seconds. | | | | | |

| Test Case Dynamic Behavior | | | | | |
|---|---|---|---|---|---|
| **Test Case Name** : fddiMACT_Pri1<br>**Group** : FDDI_MIB/MAC<br>**Purpose** : Verify the T_Pri1 value of the IUT MAC.<br>**Default** :<br>**Comments** : Assume IUT is a SM-DAS. This test case is optional and performed only if IUT supports priority function whose hardware is present. | | | | | |
| **Nr** | **Label** | **Behavior Description** | **Constraints Ref** | **Verdict** | **Comments** |
| 1 | | +INIT_RING | | | (1) |
| 2 | | !PMF_Frame1 | PMFGetReq_MT_Pri1 | | (2) |
| 3 | | START Timer_30 | | | |
| 4 | L0 | ?PMF_Frame2 [4<=T_Pri1<=165] | PMFGetResp_MT_Pri1 | PASS | (3) |
| 5 | | ?OTHERWISE | | | |
| 6 | | GOTO L0 | | | |
| 7 | | ?TIMEOUT Timer_30 | | FAIL | (4) |
| **Detailed Comments:**<br>(1) Call the subroutine “INIT_RING” from the RMT ATS to bring the ring up. The ring is operational.<br>(2) Tester sends a PMF get request frame to inquire the T_Pri1 of the IUT.<br>(3) IUT responds with its T_Pri1 as entered into the PIXIT proforma.<br>(4) IUT does not respond within 30 seconds. | | | | | |



Copyright International Organization for Standardization
Provided by IHS under license with ISO
No reproduction or networking permitted without license from IHS
Not for Resale

**Test Case Dynamic Behavior**

**Test Case Name** : fddiMACT_Pri2
**Group** : FDDI_MIB/MAC
**Purpose** : Verify the T_Pri2 value of the IUT MAC.
**Default** :
**Comments** : Assume IUT is a SM-DAS. This test case is optional and performed only if IUT supports priority function whose hardware is present.

| Nr | Label | Behavior Description | Constraints Ref | Verdict | Comments |
|---|---|---|---|---|---|
| 1 | | +INIT_RING | | | (1) |
| 2 | | !PMF_Frame1 | PMFGetReq_MT_Pri2 | | (2) |
| 3 | | START Timer_30 | | | |
| 4 | L0 | ?PMF_Frame2 [4<=T_Pri2<=165] | PMFGetResp_MT_Pri2 | PASS | (3) |
| 5 | | ?OTHERWISE | | | |
| 6 | | GOTO L0 | | | |
| 7 | | ?TIMEOUT Timer_30 | | FAIL | (4) |

**Detailed Comments:**

(1) Call the subroutine “INIT_RING” from the RMT ATS to bring the ring up. The ring is operational.
(2) Tester sends a PMF get request frame to inquire the T_Pri2 of the IUT.
(3) IUT responds with its T_Pri2 as entered into the PIXIT proforma.
(4) IUT does not respond within 30 seconds.

**Test Case Dynamic Behavior**

**Test Case Name** : fddiMACT_Pri3
**Group** : FDDI_MIB/MAC
**Purpose** : Verify the T_Pri3 value of the IUT MAC.
**Default** :
**Comments** : Assume IUT is a SM-DAS. This test case is optional and performed only if IUT supports priority function whose hardware is present.

| Nr | Label | Behavior Description | Constraints Ref | Verdict | Comments |
|---|---|---|---|---|---|
| 1 | | +INIT_RING | | | (1) |
| 2 | | !PMF_Frame1 | PMFGetReq_MT_Pri3 | | (2) |
| 3 | | START Timer_30 | | | |
| 4 | L0 | ?PMF_Frame2 [4<=T_Pri3<=165] | PMFGetResp_MT_Pri3 | PASS | (3) |
| 5 | | ?OTHERWISE | | | |
| 6 | | GOTO L0 | | | |
| 7 | | ?TIMEOUT Timer_30 | | FAIL | (4) |

**Detailed Comments:**

(1) Call the subroutine “INIT_RING” from the RMT ATS to bring the ring up. The ring is operational.
(2) Tester sends a PMF get request frame to inquire the T_Pri3 of the IUT.
(3) IUT responds with its T_Pri3 as entered into the PIXIT proforma.
(4) IUT does not respond within 30 seconds.


Copyright International Organization for Standardization
Provided by IHS under license with ISO
No reproduction or networking permitted without license from IHS
Not for Resale

**Test Case Dynamic Behavior**

**Test Case Name** : fddiMACT_Pri4
**Group** : FDDI_MIB/MAC
**Purpose** : Verify the T_Pri4 value of the IUT MAC.
**Default** :
**Comments** : Assume IUT is a SM-DAS. This test case is optional and performed only if IUT supports priority function whose hardware is present.

| Nr | Label | Behavior Description | Constraints Ref | Verdict | Comments |
|---|---|---|---|---|---|
| 1 | | +INIT_RING | | | (1) |
| 2 | | !PMF_Frame1 | PMFGetReq_MT_Pri4 | | (2) |
| 3 | | START Timer_30 | | | |
| 4 | L0 | ?PMF_Frame2 [4<=T_Pri4<=165] | PMFGetResp_MT_Pri4 | PASS | (3) |
| 5 | | ?OTHERWISE | | | |
| 6 | | GOTO L0 | | | |
| 7 | | ?TIMEOUT Timer_30 | | FAIL | (4) |

**Detailed Comments:**

(1) Call the subroutine “INIT_RING” from the RMT ATS to bring the ring up. The ring is operational.
(2) Tester sends a PMF get request frame to inquire the T_Pri4 of the IUT.
(3) IUT responds with its T_Pri4 as entered into the PIXIT proforma.
(4) IUT does not respond within 30 seconds.

**Test Case Dynamic Behavior**

**Test Case Name** : fddiMACT_Pri5
**Group** : FDDI_MIB/MAC
**Purpose** : Verify the T_Pri5 value of the IUT MAC.
**Default** :
**Comments** : Assume IUT is a SM-DAS. This test case is optional and performed only if IUT supports priority function whose hardware is present.

| Nr | Label | Behavior Description | Constraints Ref | Verdict | Comments |
|---|---|---|---|---|---|
| 1 | | +INIT_RING | | | (1) |
| 2 | | !PMF_Frame1 | PMFGetReq_MT_Pri5 | | (2) |
| 3 | | START Timer_30 | | | |
| 4 | L0 | ?PMF_Frame2 [4<=T_Pri5<=165] | PMFGetResp_MT_Pri5 | PASS | (3) |
| 5 | | ?OTHERWISE | | | |
| 6 | | GOTO L0 | | | |
| 7 | | ?TIMEOUT Timer_30 | | FAIL | (4) |

**Detailed Comments:**

(1) Call the subroutine “INIT_RING” from the RMT ATS to bring the ring up. The ring is operational.
(2) Tester sends a PMF get request frame to inquire the T_Pri5 of the IUT.
(3) IUT responds with its T_Pri5 as entered into the PIXIT proforma.
(4) IUT does not respond within 30 seconds.



Copyright International Organization for Standardization
Provided by IHS under license with ISO
No reproduction or networking permitted without license from IHS
Not for Resale

**Test Case Dynamic Behavior**

**Test Case Name** : fddiMACT_Pri6
**Group** : FDDI_MIB/MAC
**Purpose** : Verify the T_Pri6 value of the IUT MAC.
**Default** :
**Comments** : Assume IUT is a SM-DAS. This test case is optional and performed only if IUT supports priority function whose hardware is present.

| Nr | Label | Behavior Description | Constraints Ref | Verdict | Comments |
|---|---|---|---|---|---|
| 1 | | +INIT_RING | | | (1) |
| 2 | | !PMF_Frame1 | PMFGetReq_MT_Pri6 | | (2) |
| 3 | | START Timer_30 | | | |
| 4 | L0 | ?PMF_Frame2 [4<=T_Pri6<=165] | PMFGetResp_MT_Pri6 | PASS | (3) |
| 5 | | ?OTHERWISE | | | |
| 6 | | GOTO L0 | | | |
| 7 | | ?TIMEOUT Timer_30 | | FAIL | (4) |

**Detailed Comments:**

(1) Call the subroutine “INIT_RING” from the RMT ATS to bring the ring up. The ring is operational.
(2) Tester sends a PMF get request frame to inquire the T_Pri6 of the IUT.
(3) IUT responds with its T_Pri6 as entered into the PIXIT proforma.
(4) IUT does not respond within 30 seconds.


Copyright International Organization for Standardization
Provided by IHS under license with ISO
No reproduction or networking permitted without license from IHS
Not for Resale

## Test Case Dynamic Behavior

**Test Case Name** : fddiMACFrame_Ct
**Group** : FDDI_MIB/MAC
**Purpose** : Verify a count of the number of frames received by the IUT MAC
**Default** :
**Comments** : Assume IUT is a SM-DAS. This test case is mandatory if hardware present.

| Nr | Label | Behavior Description | Constraints Ref | Verdict | Com-ments |
|---|---|---|---|---|---|
| 1 | | +INIT_RING | | | (1) |
| 2 | | !PMF_Frame1 | PMFGetReq_MFC1 | | (2) |
| 3 | | START Timer_30 | | | |
| 4 | L1 | ?PMF_Frame2 | PMFGetResp_MFC1 | | (3) |
| 5 | | (NUM1:=0) | | | |
| 6 | | REPEAT SEND_FRMS1(NUM1) | | | (4) |
| 7 | | UNTIL [NUM1=10] | | | |
| 8 | | !PMF_Frame1 | PMFGetReq_MFC2 | | (5) |
| 9 | | START Timer_30 | | | |
| 10 | L0 | ?PMF_Frame2 [FRM_CT2 - FRM_CT1 = NUM1] | PMFGetResp_MFC2 | PASS | (6) |
| 11 | | ?OTHERWISE | | | |
| 12 | | GOTO L0 | | | |
| 13 | | ?TIMEOUT Timer_30 | | FAIL | (7) |
| 14 | | ?OTHERWISE | | | |
| 15 | | GOTO L1 | | | |
| 16 | | ?TIMEOUT Timer_30 | | FAIL | (7) |
| | | SEND_FRMS1(N:INTEGER) | | | |
| 17 | | !LLC_Frame | LLC_FRM1 | | |
| 18 | | (N:=N+1) | | | |

**Detailed Comments:**

(1) Call the subroutine “INIT_RING” from the RMT ATS to bring the ring up. The ring is operational.
(2) Tester sends a PMF get request frame to inquire the initial frame count of the IUT MAC.
(3) Receive the initial frame count from the IUT.
(4) Tester sends a number of LLC frames with DA<>IUT_ADDRESS to the IUT.
(5) Tester sends a PMF get request frame to inquire the final frame count of the IUT MAC.
(6) Receive the final frame count from the IUT MAC where the difference between the final and initial counts is the number of LLC frames sent by the tester in (4) above.
(7) IUT does not respond within 30 seconds.



Copyright International Organization for Standardization
Provided by IHS under license with ISO
No reproduction or networking permitted without license from IHS
Not for Resale

## Test Case Dynamic Behavior

**Test Case Name** : fddiMACCopied_Ct
**Group** : FDDI_MIB/MAC
**Purpose** : Verify a count of the number of frames addressed to and successfully copied into the IUT receive buffers by the IUT MAC.
**Default** :
**Comments** : Assume IUT is a SM-DAS. This test case is mandatory if hardware present.

| Nr | Label | Behavior Description | Constraints Ref | Verdict | Com-ments |
|---|---|---|---|---|---|
| 1 | | +INIT_RING | | | (1) |
| 2 | | !PMF_Frame1 | PMFGetReq_MCC1 | | (2) |
| 3 | | START Timer_30 | | | |
| 4 | L1 | ?PMF_Frame2 | PMFGetResp_MCC1 | | (3) |
| 5 | | (NUM2:=0) | | | |
| 6 | | REPEAT SEND_FRMS2(NUM2) | | | (4) |
| 7 | | UNTIL [NUM2=10] | | | |
| 8 | | !PMF_Frame1 | PMFGetReq_MCC2 | | (5) |
| 9 | | START Timer_30 | | | |
| 10 | L0 | ?PMF_Frame2 [FRM_CT2 - FRM_CT1 = NUM2] | PMFGetResp_MCC2 | PASS | (6) |
| 11 | | ?OTHERWISE | | | |
| 12 | | GOTO L0 | | | |
| 13 | | ?TIMEOUT Timer_30 | | FAIL | (7) |
| 14 | | ?OTHERWISE | | | |
| 15 | | GOTO L1 | | | |
| 16 | | ?TIMEOUT Timer_30 | | FAIL | (7) |
| | | SEND_FRMS2(N:INTEGER) | | | |
| 17 | | !LLC_Frame | LLC_FRM2 | | |
| 18 | | (N:=N+1) | | | |

**Detailed Comments:**

(1) Call the subroutine “INIT_RING” from the RMT ATS to bring the ring up. The ring is operational.
(2) Tester sends a PMF get request frame to inquire the initial copied count of the IUT MAC.
(3) Receive the initial copied count from the IUT.
(4) Tester sends a number of LLC frames with DA=IUT_ADDRESS to the IUT.
(5) Tester sends a PMF get request frame to inquire the final copied count of the IUT MAC.
(6) Receive the final copied count from the IUT.MAC where the difference between the final and initial counts is the number of LLC frames sent by the tester in (4) above.
(7) IUT does not respond within 30 seconds.


Copyright International Organization for Standardization
Provided by IHS under license with ISO
No reproduction or networking permitted without license from IHS
Not for Resale

## Test Case Dynamic Behavior

**Test Case Name** : fddiMACTransmit_Ct
**Group** : FDDI_MIB/MAC
**Purpose** : Verify a count of the number of frames transmitted by the IUT MAC.
**Default** :
**Comments** : Assume IUT is a SM-DAS. This test case is mandatory if hardware present.

| Nr | Label | Behavior Description | Constraints Ref | Verdict | Com-ments |
|---|---|---|---|---|---|
| 1 | | +INIT_RING | | | (1) |
| 2 | | !PMF_Frame1 | PMFGetReq_MTC1 | | (2) |
| 3 | | START Timer_30 | | | |
| 4 | L2 | ?PMF_Frame2 | PMFGetResp_MTC1 | | (3) |
| 5 | | (NUM3:=0) | | | |
| 6 | | +SEND_FRMS3(NUM3) | | | (4) |
| 7 | | !PMF_Frame1 | PMFGetReq_MTC2 | | (5) |
| 8 | | START Timer_30 | | | |
| 9 | L1 | ?PMF_Frame2 [XMIT_CT2 - XMIT_CT1 >= NUM3] | PMFGetResp_MTC2 | PASS | (6) |
| 10 | | ?OTHERWISE | | | |
| 11 | | GOTO L1 | | | |
| 12 | | ?TIMEOUT Timer_30 | | FAIL | (7) |
| 13 | | ?OTHERWISE | | | |
| 14 | | GOTO L2 | | | |
| 15 | | ?TIMEOUT Timer_30 | | FAIL | (7) |
| | L0 | SEND_FRMS3(N:INTEGER) | | | |
| 16 | | START Timer_30 | NIF_Test_Req | | (8) |
| 17 | | !NIF_Frame | NIF_Test_Resp | | (9) |
| 18 | | ?NIF_Frame | | | |
| 19 | | (N:=N+1) | | | |
| 20 | | GOTO L0 | | | |
| 21 | | ?OTHERWISE | | | |
| 22 | | (N:=N+1) | | | |
| 23 | | GOTO L0 | | | |
| 24 | | ?TIMEOUT Timer_30 | | INCONC | |

**Detailed Comments:**

(1) Call the subroutine “INIT_RING” from the RMT ATS to bring the ring up. The ring is operational.
(2) Tester sends a PMF get request frame to inquire the initial transmit count of the IUT.
(3) Receive the initial transmit count from the IUT.
(4) Tester sends a number of NIF request frames on the ring for 30 seconds.
(5) Tester sends a PMF get request frame to inquire the final transmit count of the IUT.
(6) Receive the final transmit count from the IUT where the difference between the final and initial counts is closely matched the number of NIF request frames transmitted by the tester in (4) above.
(7) IUT does not respond within 30 seconds.
(8) Tester sends NIF request frame with DA=IUT_ADDRESS on the ring.
(9) Receive NIF response frame from the IUT. Assume that IUT responds to each NIF request frame from the tester.



Copyright International Organization for Standardization
Provided by IHS under license with ISO
No reproduction or networking permitted without license from IHS
Not for Resale

## Test Case Dynamic Behavior

**Test Case Name** : fddiMACToken_Ct
**Group** : FDDI_MIB/MAC
**Purpose** : Verify a count of the number of tokens received by the IUT MAC.
**Default** :
**Comments** : Assume IUT is a SM-DAS. This test case is optional and performed if hardware present.

| Nr | Label | Behavior Description | Constraints Ref | Verdict | Com-ments |
|---|---|---|---|---|---|
| 1 | | +INIT_RING | | | (1) |
| 2 | | !PMF_Frame1 | PMFGetReq_MTKC1 | | (2) |
| 3 | | START Timer_30 | | | |
| 4 | L1 | ?PMF_Frame2 | PMFGetResp_MTKC1 | | (3) |
| 5 | | (NUM4:=0) | | | |
| 6 | | REPEAT SEND_FRMS4(NUM4) | | | (4) |
| | | UNTIL [NUM4=10] | | | |
| 7 | | !PMF_Frame1 | PMFGetReq_MTKC2 | | (5) |
| 8 | | START Timer_30 | | | |
| 9 | L0 | ?PMF_Frame2 [TK_CT2 - TK_CT1 = NUM4] | PMFGetResp_MTKC2 | PASS | (6) |
| 10 | | ?OTHERWISE | | | |
| 11 | | GOTO L0 | | | |
| 12 | | ?TIMEOUT Timer_30 | | FAIL | (7) |
| 13 | | ?OTHERWISE | | | |
| 14 | | GOTO L1 | | | |
| 15 | | ?TIMEOUT Timer_30 | | FAIL | (7) |
| | | SEND_FRMS4(N:INTEGER) | | | |
| 16 | | !TOKEN | TOKEN_UR | | (8) |
| 17 | | (N:=N+1) | | | (9) |

**Detailed Comments:**

(1) Call the subroutine “INIT_RING” from the RMT ATS to bring the ring up. The ring is operational.
(2) Tester sends a PMF get request frame to inquire the initial token count of the IUT.
(3) Receive the initial token count from the IUT.
(4) Tester sends a number of tokens to the IUT.
(5) Tester sends a PMF get request frame to inquire the final token count of the IUT.
(6) Receive the final token count from the IUT where the difference between the final and initial token counts is the number of tokens transmitted by the tester in (4) above.
(7) IUT does not respond within 30 seconds.
(8) Tester sends tokens on the ring. Note that TOKEN and TOKEN_UR has been defined in the RMT ATS declaration and constraint sections.
(9) Total number of tokens sent by the tester.


Copyright International Organization for Standardization
Provided by IHS under license with ISO
No reproduction or networking permitted without license from IHS
Not for Resale

## Test Case Dynamic Behavior

**Test Case Name** : fddiMACError_Ct
**Group** : FDDI_MIB/MAC
**Purpose** : Verify a count of the number of frames that were detected in error by the IUT MAC that had not been detected in error by another MAC.
**Default** :
**Comments** : Assume IUT is a SM-DAS. This test case is mandatory if hardware present.

| Nr | Label | Behavior Description | Constraints Ref | Verdict | Comments |
|---|---|---|---|---|---|
| 1 | | +INIT_RING | | | (1) |
| 2 | | !PMF_Frame1 | PMFGetReq_MEC1 | | (2) |
| 3 | | START Timer_30 | | | |
| 4 | L1 | ?PMF_Frame2 | PMFGetResp_MEC1 | | (3) |
| 5 | | (NUM5:=0) | | | |
| 6 | | REPEAT SEND_FRMS5(NUM5) | | | (4) |
| | | UNTIL [NUM5=10] | | | |
| 7 | | !PMF_Frame1 | PMFGetReq_MEC2 | | (5) |
| 8 | | START Timer_30 | | | |
| 9 | L0 | ?PMF_Frame2 [ER_CT2 - ER_CT1 = NUM5] | PMFGetResp_MEC2 | PASS | (6) |
| 10 | | ?OTHERWISE | | | |
| 11 | | GOTO L0 | | | |
| 12 | | ?TIMEOUT Timer_30 | | FAIL | (7) |
| 13 | | ?OTHERWISE | | | |
| 14 | | GOTO L1 | | | |
| 15 | | ?TIMEOUT Timer_30 | | FAIL | (7) |
| | | SEND_FRMS5(N:INTEGER) | | | |
| 16 | | !LLC_Frame | LLC_Err1 | | |
| 17 | | (N:=N+1) | | | (8) |

**Detailed Comments:**

(1) Call the subroutine “INIT_RING” from the RMT ATS to bring the ring up. The ring is operational.
(2) Tester sends a PMF get request frame to inquire the initial error count of the IUT.
(3) Receive the initial error count from the IUT.
(4) Tester sends a number of LLC frames with DA=IUT_ADDRESS and bad FCS on the ring.
(5) Tester sends a PMF get request frame to inquire the final error count of the IUT.
(6) Receive the final error count from the IUT where the difference between the final and initial error counts is the number of LLC frames sent by the tester in (4) above.
(7) IUT does not respond within 30 seconds.
(8) Total number of frames having bad FCS on the ring.



Copyright International Organization for Standardization
Provided by IHS under license with ISO
No reproduction or networking permitted without license from IHS
Not for Resale

## Test Case Dynamic Behavior

**Test Case Name** : fddiMACLost_Ct
**Group** : FDDI_MIB/MAC
**Purpose** : Verify a count of the number of instances that the IUT MAC detected a format error during frame reception such that the frame was stripped.
**Default** :
**Comments** : Assume IUT is a SM-DAS. This test case is mandatory if hardware present.

| Nr | Label | Behavior Description | Constraints Ref | Verdict | Comments |
|---|---|---|---|---|---|
| 1 | | +INIT_RING | | | (1) |
| 2 | | !PMF_Frame1 | PMFGetReq_MLC1 | | (2) |
| 3 | | START Timer_30 | | | |
| 4 | L1 | ?PMF_Frame2 | PMFGetResp_MLC1 | | (3) |
| 5 | | (NUM6:=0) | | | |
| 6 | | REPEAT SEND_FRMS6(NUM6) | | | (4) |
| | | UNTIL [NUM6=10] | | | |
| 7 | | !PMF_Frame1 | PMFGetReq_MLC2 | | (5) |
| 8 | | START Timer_30 | | | |
| 9 | L0 | ?PMF_Frame2 [LST_CT2 - LST_CT1 = NUM6] | PMFGetResp_MLC2 | PASS | (6) |
| 10 | | ?OTHERWISE | | | |
| 11 | | GOTO L0 | | | |
| 12 | | ?TIMEOUT Timer_30 | | FAIL | (7) |
| 13 | | ?OTHERWISE | | | |
| 14 | | GOTO L1 | | | |
| 15 | | ?TIMEOUT Timer_30 | | FAIL | (7) |
| | | SEND_FRMS5(N:INTEGER) | | | |
| 16 | | !LLC_Frame | LLC_Err2 | | |
| 17 | | (N:=N+1) | | | (8) |

**Detailed Comments:**

(1) Call the subroutine “INIT_RING” from the RMT ATS to bring the ring up. The ring is operational.
(2) Tester sends a PMF get request frame to inquire the initial lost count of the IUT.
(3) Receive the initial lost count from the IUT.
(4) Tester sends a number of LLC frames with DA=IUT_ADDRESS and invalid symbol on the ring.
(5) Tester sends a PMF get request frame to inquire the final lost count of the IUT.
(6) Receive the final lost count from the IUT where the difference between the final and initial error counts is the number of LLC frames sent by the tester in (4) above.
(7) IUT does not respond within 30 seconds.
(8) Total number of frames having format error on the ring.


Copyright International Organization for Standardization
Provided by IHS under license with ISO
No reproduction or networking permitted without license from IHS
Not for Resale

## Test Case Dynamic Behavior

**Test Case Name** : fddiMACTvxExpired_Ct
**Group** : FDDI_MIB/MAC
**Purpose** : Check a count of the number of times that TVX has expired.
**Default** :
**Comments** : Assume IUT is a SM-DAS. This test case is optional and performed only if hardware present.

| Nr | Label | Behavior Description | Constraints Ref | Verdict | Comments |
|---|---|---|---|---|---|
| 1 | | +INIT_RING | | | (1) |
| 2 | | !PMF_Frame1 | PMFGetReq_MTEC1 | | (2) |
| 3 | | START Timer_30 | | | |
| 4 | L2 | ?PMF_Frame2 | PMFGetResp_MTEC1 | | (3) |
| 5 | | +SEND_ILS | | | (4) |
| 6 | | START Timer_30 | | | |
| 7 | | ?TIMEOUT Timer_30 | | | (5) |
| 8 | | !PMF_Frame1 | PMFGetReq_MTEC2 | | (6) |
| 9 | | START Timer_30 | | | |
| 10 | L1 | ?PMF_Frame2 [TE_CT2 - TE_CT1 > 0] | PMFGetResp_MTEC2 | PASS | (7) |
| 11 | | ?OTHERWISE | | | |
| 12 | | GOTO L1 | | | |
| 13 | | ?TIMEOUT Timer_30 | | FAIL | (8) |
| 14 | | ?OTHERWISE | | | |
| 15 | | GOTO L2 | | | |
| 16 | | ?TIMEOUT Timer_30 | | FAIL | (8) |
| | | SEND_ILS | | | |
| 17 | | START Timer_30 | | | |
| 18 | L0 | !ILS_FRM | IDLES | | |
| 19 | | ?ILS_FRM | IDLES | | |
| 20 | | GOTO L0 | | | |
| 21 | | ?OTHERWISE | | | |
| 22 | | GOTO L0 | | | |
| 23 | | ?TIMEOUT Timer_30 | | | |

**Detailed Comments:**

(1) Call the subroutine “INIT_RING” from the RMT ATS to bring the ring up. The ring is operational.
(2) Tester sends a PMF get request frame to inquire the initial number of the times that TVX has expired in the IUT.
(3) Receive the initial count of times that TVX has expired from the IUT.
(4) Tester sends idle line states on the ring for 30 seconds.
(5) Wait for 30 seconds for the ring to recover.
(6) Tester sends a PMF get request frame to inquire the final count of times that TVX has expired in the IUT.
(7) Receive the final count of times that TVX has expired where the difference between the final and initial counts is greater than zero.
(8) IUT does not respond within 30 seconds.



Copyright International Organization for Standardization
Provided by IHS under license with ISO
No reproduction or networking permitted without license from IHS
Not for Resale

## Test Case Dynamic Behavior

**Test Case Name** : fddiMACLate_Ct
**Group** : FDDI_MIB/MAC
**Purpose** : Check a count of the number TRT expirations since the IUT MAC was reset or a token was received.
**Default** :
**Comments** : Assume IUT is a SM-DAS. This test case is optional and performed only if hardware present.

| Nr | Label | Behavior Description | Constraints Ref | Verdict | Comments |
|---|---|---|---|---|---|
| 1 | | +INIT_RING | | | (1) |
| 2 | | !PMF_Frame1 | PMFGetReq_MLC1 | | (2) |
| 3 | | START Timer_30 | | | |
| 4 | L2 | ?PMF_Frame2 | PMFGetResp_MLC1 | | (3) |
| 5 | | +SEND_ILS | | | (4) |
| 6 | | START Timer_30 | | | |
| 7 | | ?TIMEOUT Timer_30 | | | (5) |
| 8 | | !PMF_Frame1 | PMFGetReq_MLC2 | | (6) |
| 9 | | START Timer_30 | | | |
| 10 | L1 | ?PMF_Frame2 [LT_CT2 - LT_CT1 > 0] | PMFGetResp_MLC2 | PASS | (7) |
| 11 | | ?OTHERWISE | | | |
| 12 | | GOTO L1 | | | |
| 13 | | ?TIMEOUT Timer_30 | | FAIL | (8) |
| 14 | | ?OTHERWISE | | | |
| 15 | | GOTO L2 | | | |
| 16 | | ?TIMEOUT Timer_30 | | FAIL | (8) |
| | | SEND_ILS | | | |
| 17 | | START Timer_30 | | | |
| 18 | L0 | !ILS_FRM | IDLES | | |
| 19 | | ?ILS_FRM | IDLES | | |
| 20 | | GOTO L0 | | | |
| 21 | | ?OTHERWISE | | | |
| 22 | | GOTO L0 | | | |
| 23 | | ?TIMEOUT Timer_30 | | | |

**Detailed Comments:**

(1) Call the subroutine “INIT_RING” from the RMT ATS to bring the ring up. The ring is operational.
(2) Tester sends a PMF get request frame to inquire the initial Late_Ct of the IUT.
(3) Receive the initial Late_Ct from the IUT.
(4) Tester sends idle line states on the ring for 30 seconds.
(5) Wait for 30 seconds for the ring to recover.
(6) Tester sends a PMF get request frame to inquire the final Late_Ct of the IUT.
(7) Receive the final Late_Ct where the difference between the final and initial counts is greater than zero.
(8) IUT does not respond within 30 seconds.


Copyright International Organization for Standardization
Provided by IHS under license with ISO
No reproduction or networking permitted without license from IHS
Not for Resale

| Test Case Dynamic Behavior | | | | | |
|---|---|---|---|---|---|
| **Test Case Name** : fddiMACRMTState<br>**Group** : FDDI_MIB/MAC<br>**Purpose** : Check the current state of the IUT RMT state machine.<br>**Default** :<br>**Comments** : This test case is mandatory if hardware present. | | | | | |
| **Nr** | **Label** | **Behavior Description** | **Constraints Ref** | **Verdict** | **Comments** |
| 1 | | +INIT_RING | | | (1) |
| 2 | | !PMF_Frame1 | PMFGetReq_MRS | | (2) |
| 3 | | START Timer_30 | | | |
| 4 | L0 | ?PMF_Frame2 | PMFGetResp_MRS | PASS | (3) |
| 5 | | ?OTHERWISE | | | |
| 6 | | GOTO L0 | | | |
| 7 | | ?TIMEOUT Timer_30 | | FAIL | (4) |
| **Detailed Comments:**<br>(1) Call the subroutine “INIT_RING” from the RMT ATS to bring the ring up. The ring is operational.<br>(2) Tester sends a PMF get request frame to inquire the current state of the IUT RMT state machine.<br>(3) IUT responds with its current RMT state of Ring_Op.<br>(4) IUT does not respond within 30 seconds. | | | | | |

| Test Case Dynamic Behavior | | | | | |
|---|---|---|---|---|---|
| **Test Case Name** : fddiMACDA_Flag<br>**Group** : FDDI_MIB/MAC<br>**Purpose** : Check the current RMT Duplicate Address flag (DA_Flag) of the IUT.<br>**Default** :<br>**Comments** : This test case is mandatory if hardware present. | | | | | |
| **Nr** | **Label** | **Behavior Description** | **Constraints Ref** | **Verdict** | **Comments** |
| 1 | | +INIT_RING | | | (1) |
| 2 | | !PMF_Frame1 | PMFGetReq_MDAF | | (2) |
| 3 | | START Timer_30 | | | |
| 4 | L0 | ?PMF_Frame2 | PMFGetResp_MDAF | PASS | (3) |
| 5 | | ?OTHERWISE | | | |
| 6 | | GOTO L0 | | | |
| 7 | | ?TIMEOUT Timer_30 | | FAIL | (4) |
| **Detailed Comments:**<br>(1) Call the subroutine “INIT_RING” from the RMT ATS to bring the ring up. The ring is operational.<br>(2) Tester sends a PMF get request frame to inquire the current DA_Flag of the IUT.<br>(3) IUT responds with its current DA_Flag of FALSE.<br>(4) IUT does not respond within 30 seconds. | | | | | |



Copyright International Organization for Standardization
Provided by IHS under license with ISO
No reproduction or networking permitted without license from IHS
Not for Resale

**Test Case Dynamic Behavior**

**Test Case Name** : fddiMACUNDA_Flag1
**Group** : FDDI_MIB/MAC
**Purpose** : Check the current UNDA_Flag of the IUT when there is no duplicate address on the ring.
**Default** :
**Comments** : This test case is mandatory if hardware present.

| Nr | Label | Behavior Description | Constraints Ref | Verdict | Comments |
|---|---|---|---|---|---|
| 1 | | +INIT_RING | | | (1) |
| 2 | | !PMF_Frame1 | PMFGetReq_MUNDAF1 | | (2) |
| 3 | | START Timer_30 | | | |
| 4 | L0 | ?PMF_Frame2 | PMFGetResp_MUNDAF1 | PASS | (3) |
| 5 | | ?OTHERWISE | | | |
| 6 | | GOTO L0 | | | |
| 7 | | ?TIMEOUT Timer_30 | | FAIL | (4) |

**Detailed Comments:**

(1) Call the subroutine “INIT_RING” from the RMT ATS to bring the ring up. The ring is operational.
(2) Tester sends a PMF get request frame to inquire the current UNDA_Flag of the IUT.
(3) IUT responds with its current UNDA_Flag of FALSE.
(4) IUT does not respond within 30 seconds.

**Test Case Dynamic Behavior**

**Test Case Name** : fddiMACUNDA_Flag2
**Group** : FDDI_MIB/MAC
**Purpose** : Check the current UNDA_Flag of the IUT when there is a duplicate address on the ring.
**Default** :
**Comments** : This test case is mandatory if hardware present.

| Nr | Label | Behavior Description | Constraints Ref | Verdict | Comments |
|---|---|---|---|---|---|
| 1 | | +INIT_RING | | | (1) |
| 2 | | !NIF_Frame | NIF_TSTR_Ann | | (2) |
| 3 | | START Timer_30 | | | |
| 4 | L1 | ?TIMEOUT Timer_30 | | | (3) |
| 5 | | !PMF_Frame1 | PMFGetReq_MUNDAF2 | | (4) |
| 6 | | START Timer_30 | | | |
| 7 | L0 | ?PMF_Frame2 | PMFGetResp_MUNDAF2 | PASS | (5) |
| 8 | | ?OTHERWISE | | | |
| 9 | | GOTO L0 | | | |
| 10 | | ?TIMEOUT Timer_30 | | FAIL | (6) |
| 11 | | ?OTHERWISE | | | |
| 12 | | GOTO L1 | | | |

**Detailed Comments:**

(1) Call the subroutine “INIT_RING” from the RMT ATS to bring the ring up. The ring is operational.
(2) Tester sends a NIF announcement frame with StationState.DuplAddress.MyDuplicate=SET to indicate a duplicate address condition on the ring.
(3) Wait for IUT to react to the NIF announcement frame.
(4) Tester sends a PMF get request frame to inquire the current UNDA_Flag of the IUT.
(5) IUT responds with its current UNDA_Flag of TRUE.
(6) IUT does not respond within 30 seconds.


Copyright International Organization for Standardization
Provided by IHS under license with ISO
No reproduction or networking permitted without license from IHS
Not for Resale

| Test Case Dynamic Behavior | | | | | |
|---|---|---|---|---|---|
| **Test Case Name** : fddiMACFrameErrorFlag<br>**Group** : FDDI_MIB/MAC<br>**Purpose** : Check the current frame error flag of the IUT.<br>**Default** :<br>**Comments** : This test case is mandatory if hardware present. | | | | | |
| **Nr** | **Label** | **Behavior Description** | **Constraints Ref** | **Verdict** | **Comments** |
| 1 | | +INIT_RING | | | (1) |
| 2 | | !PMF_Frame1 | PMFGetReq_MFEF | | (2) |
| 3 | | START Timer_30 | | | |
| 4 | L0 | ?PMF_Frame2 | PMFGetResp_MFEF | PASS | (3) |
| 5 | | ?OTHERWISE | | | |
| 6 | | GOTO L0 | | | |
| 7 | | ?TIMEOUT Timer_30 | | FAIL | (4) |
| **Detailed Comments:**<br>(1) Call the subroutine “INIT_RING” from the RMT ATS to bring the ring up. The ring is operational.<br>(2) Tester sends a PMF get request frame to inquire the current frame error flag of the IUT.<br>(3) Receive the current frame error flag of FALSE from the IUT.<br>(4) IUT does not respond within 30 seconds. | | | | | |

| Test Case Dynamic Behavior | | | | | |
|---|---|---|---|---|---|
| **Test Case Name** : fddiMACMA_UnitdataAvailable<br>**Group** : FDDI_MIB/MAC<br>**Purpose** : Check the current MAC_Available flag of the IUT.<br>**Default** :<br>**Comments** : This test case is mandatory if hardware present. | | | | | |
| **Nr** | **Label** | **Behavior Description** | **Constraints Ref** | **Verdict** | **Comments** |
| 1 | | +INIT_RING | | | (1) |
| 2 | | !PMF_Frame1 | PMFGetReq_MAUA | | (2) |
| 3 | | START Timer_30 | | | |
| 4 | L0 | ?PMF_Frame2 | PMFGetResp_MAUA | PASS | (3) |
| 5 | | ?OTHERWISE | | | |
| 6 | | GOTO L0 | | | |
| 7 | | ?TIMEOUT Timer_30 | | FAIL | (4) |
| **Detailed Comments:**<br>(1) Call the subroutine “INIT_RING” from the RMT ATS to bring the ring up. The ring is operational.<br>(2) Tester sends a PMF get request frame to inquire the current MAC_Available flag of the IUT.<br>(3) Receive the current MAC_Available flag of TRUE from the IUT.<br>(4) IUT does not respond within 30 seconds. | | | | | |



--`,,```,,,,````-`-`,,`,,`,`,,`---
Copyright International Organization for Standardization
Provided by IHS under license with ISO
No reproduction or networking permitted without license from IHS
Not for Resale

**Test Case Dynamic Behavior**

**Test Case Name** : fddiMACHardwarePresent
**Group** : FDDI_MIB/MAC
**Purpose** : Check the presence of underlying hardware support for the IUT MAC object.
**Default** :
**Comments** : Assume IUT is SM-DAS and there is a presence of underlying hardware support for an IUT MAC object.

| Nr | Label | Behavior Description | Constraints Ref | Verdict | Comments |
|---|---|---|---|---|---|
| 1 | | +INIT_RING | | | (1) |
| 2 | | !PMF_Frame1 | PMFGetReq_MHP | | (2) |
| 3 | | START Timer_30 | | | |
| 4 | L0 | ?PMF_Frame2 | PMFGetResp_MHP | PASS | (3) |
| 5 | | ?OTHERWISE | | | |
| 6 | | GOTO L0 | | | |
| 7 | | ?TIMEOUT Timer_30 | | FAIL | (4) |

**Detailed Comments:**

(1) Call the subroutine “INIT_RING” from the RMT ATS to bring the ring up. The ring is operational.
(2) Tester sends a PMF get request frame to inquire the presence of underlying hardware support for the IUT MAC object.
(3) Receive the presence of underlying hardware support for the IUT MAC object of “Present” from the IUT.
(4) IUT does not respond within 30 seconds.

**Test Case Dynamic Behavior**

**Test Case Name** : fddiMACMA_UnitdataEnable
**Group** : FDDI_MIB/MAC
**Purpose** : Check the current MA_UNITDATA_Enable flag of the IUT.
**Default** :
**Comments** :

| Nr | Label | Behavior Description | Constraints Ref | Verdict | Comments |
|---|---|---|---|---|---|
| 1 | | +INIT_RING | | | (1) |
| 2 | | !PMF_Frame1 | PMFGetReq_MAUE | | (2) |
| 3 | | START Timer_30 | | | |
| 4 | L0 | ?PMF_Frame2 | PMFGetResp_MAUE | PASS | (3) |
| 5 | | ?OTHERWISE | | | |
| 6 | | GOTO L0 | | | |
| 7 | | ?TIMEOUT Timer_30 | | FAIL | (4) |

**Detailed Comments:**

(1) Call the subroutine “INIT_RING” from the RMT ATS to bring the ring up. The ring is operational.
(2) Tester sends a PMF get request frame to inquire the current MA_UNITDATA_Enable flag of the IUT.
(3) Receive the current MA_UNITDATA_Enable flag of TRUE from the IUT.
(4) IUT does not respond within 30 seconds.


Copyright International Organization for Standardization
Provided by IHS under license with ISO
No reproduction or networking permitted without license from IHS
Not for Resale

| Test Case Dynamic Behavior | | | | | |
|---|---|---|---|---|---|
| **Test Case Name** : fddiPATHIndex<br>**Group** : FDDI_MIB/PATH<br>**Purpose** : Check the current PATHIndex of the IUT.<br>**Default** :<br>**Comments** : | | | | | |
| **Nr** | **Label** | **Behavior Description** | **Constraints Ref** | **Verdict** | **Comments** |
| 1 | | +INIT_RING | | | (1) |
| 2 | | !PMF_Frame1 | PMFGetReq_PI | | (2) |
| 3 | | START Timer_30 | | | |
| 4 | L0 | ?PMF_Frame2 | PMFGetResp_PI | PASS | (3) |
| 5 | | ?OTHERWISE | | | |
| 6 | | GOTO L0 | | | |
| 7 | | ?TIMEOUT Timer_30 | | FAIL | (4) |
| **Detailed Comments:**<br>(1) Call the subroutine “INIT_RING” from the RMT ATS to bring the ring up. The ring is operational.<br>(2) Tester sends a PMF get request frame to inquire the PATHIndex of the IUT.<br>(3) Receive the PATHIndex of “primary” from the IUT.<br>(4) IUT does not respond within 30 seconds. | | | | | |

| Test Case Dynamic Behavior | | | | | |
|---|---|---|---|---|---|
| **Test Case Name** : fddiPATHRingLatency<br>**Group** : FDDI_MIB/PATH<br>**Purpose** : Check the current accumulated latency of the ring associated with the current IUT path.<br>**Default** :<br>**Comments** : | | | | | |
| **Nr** | **Label** | **Behavior Description** | **Constraints Ref** | **Verdict** | **Comments** |
| 1 | | +INIT_RING | | | (1) |
| 2 | | !PMF_Frame1 | PMFGetReq_PRL | | (2) |
| 3 | | START Timer_30 | | | |
| 4 | L0 | ?PMF_Frame2 [R_Latency<=D_Max] | PMFGetResp_PRL | PASS | (3) |
| 5 | | ?OTHERWISE | | | |
| 6 | | GOTO L0 | | | |
| 7 | | ?TIMEOUT Timer_30 | | FAIL | (4) |
| **Detailed Comments:**<br>(1) Call the subroutine “INIT_RING” from the RMT ATS to bring the ring up. The ring is operational.<br>(2) Tester sends a PMF get request frame to inquire the PATHRingLatency attribute of the IUT.<br>(3) Receive the current PATHRingLatency of R_Latency (<=D_Max) from the IUT.<br>(4) IUT does not respond within 30 seconds. | | | | | |



Copyright International Organization for Standardization
Provided by IHS under license with ISO
No reproduction or networking permitted without license from IHS
Not for Resale

**Test Case Dynamic Behavior**

**Test Case Name** : fddiPATHT_Rmode
**Group** : FDDI_MIB/PATH
**Purpose** : Verify that the duration of restricted dialog on a path can be modified using PMF set protocol.
**Default** :
**Comments** : This test case is optional and performed only if IUT supports restricted dialog function.

| Nr | Label | Behavior Description | Constraints Ref | Verdict | Comments |
|---|---|---|---|---|---|
| 1 | | +INIT_RING | | | (1) |
| 2 | | !PMF_Frame1 | PMFGetReq_PTR1 | | (2) |
| 3 | | START Timer_30 | | | |
| 4 | L2 | ?PMF_Frame2 | PMFGetResp_PTR1 | | (3) |
| 5 | | !PMF_Frame3 | PMFSetReq_PTR | | (4) |
| 6 | | START Timer_30 | | | |
| 7 | L1 | ?PMF_Frame4 | PMFSetResp_PTR | | (5) |
| 8 | | !PMF_Frame1 | PMFGetReq_PTR2 | | (6) |
| 9 | | START Timer_30 | | | |
| 10 | L0 | ?PMF_Frame2 | PMFGetResp_PTR2 | PASS | (7) |
| 11 | | ?OTHERWISE | | | |
| 12 | | GOTO L0 | | | |
| 13 | | ?TIMEOUT Timer_30 | | FAIL | (8) |
| 14 | | ?OTHERWISE | | | |
| 15 | | GOTO L1 | | | |
| 16 | | ?TIMEOUT Timer_30 | | FAIL | (8) |
| 17 | | ?OTHERWISE | | | |
| 18 | | GOTO L2 | | | |
| 19 | | ?TIMEOUT Timer_30 | | FAIL | (8) |

**Detailed Comments:**

(1) Call the subroutine “INIT_RING” from the RMT ATS to bring the ring up. The ring is operational.
(2) Tester sends a PMF get request frame to inquire the T_Rmode of the IUT.
(3) Receive the T_Rmode value from the IUT.
(4) Tester sends a PMF set request frame to change the value of T_Rmode to 2 seconds.
(5) Receive the T_Rmode of 2 seconds from the IUT.
(6) Tester sends a PMF get request to check the current T_Rmode value of the IUT.
(7) Receive the current T_Rmode of 2 seconds from the IUT.
(8) IUT does not respond within 30 seconds.

**Test Case Dynamic Behavior**

**Test Case Name** : fddiPATHTVXLowerBound
**Group** : FDDI_MIB/PATH
**Purpose** : Check the current PATHTVXLowerBound of the IUT.
**Default** :
**Comments** :

| Nr | Label | Behavior Description | Constraints Ref | Verdict | Comments |
|---|---|---|---|---|---|
| 1 | | +INIT_RING | | | (1) |
| 2 | | !PMF_Frame1 | PMFGetReq_PTLB | | (2) |
| 3 | | START Timer_30 | | | |
| 4 | L0 | ?PMF_Frame2 | PMFGetResp_PTLB | PASS | (3) |
| 5 | | ?OTHERWISE | | | |
| 6 | | GOTO L0 | | | |
| 7 | | ?TIMEOUT Timer_30 | | FAIL | (4) |

**Detailed Comments:**

(1) Call the subroutine “INIT_RING” from the RMT ATS to bring the ring up. The ring is operational.
(2) Tester sends a PMF get request frame to inquire the current PATHTVXLowerBound of the IUT.
(3) Receive the current PATHTVXLowerBound of 2.5 milliseconds (initial value) from the IUT.
(4) IUT does not respond within 30 seconds.


Copyright International Organization for Standardization
Provided by IHS under license with ISO
No reproduction or networking permitted without license from IHS
Not for Resale

| Test Case Dynamic Behavior | | | | | |
|---|---|---|---|---|---|
| **Test Case Name** : fddiPATHT_MaxLowerBound<br>**Group** : FDDI_MIB/PATH<br>**Purpose** : Check the current PATHT_MaxLowerBound of the IUT.<br>**Default** :<br>**Comments** : | | | | | |
| **Nr** | **Label** | **Behavior Description** | **Constraints Ref** | **Verdict** | **Comments** |
| 1 | | +INIT_RING | | | (1) |
| 2 | | !PMF_Frame1 | PMFGetReq_PTMLB | | (2) |
| 3 | | START Timer_30 | | | |
| 4 | L0 | ?PMF_Frame2 | PMFGetResp_PTMLB | PASS | (3) |
| 5 | | ?OTHERWISE | | | |
| 6 | | GOTO L0 | | | |
| 7 | | ?TIMEOUT Timer_30 | | FAIL | (4) |
| **Detailed Comments:**<br>(1) Call the subroutine “INIT_RING” from the RMT ATS to bring the ring up. The ring is operational.<br>(2) Tester sends a PMF get request frame to inquire the current PATHT_MaxLowerBound of the IUT.<br>(3) Receive the current PATHT_MaxLowerBound of 165 milliseconds (initial value) from the IUT.<br>(4) IUT does not respond within 30 seconds. | | | | | |

| Test Case Dynamic Behavior | | | | | |
|---|---|---|---|---|---|
| **Test Case Name** : fddiPATHMaxT_Req<br>**Group** : FDDI_MIB/PATH<br>**Purpose** : Check the current PATHMaxT_Req of the IUT.<br>**Default** :<br>**Comments** : | | | | | |
| **Nr** | **Label** | **Behavior Description** | **Constraints Ref** | **Verdict** | **Comments** |
| 1 | | +INIT_RING | | | (1) |
| 2 | | !PMF_Frame1 | PMFGetReq_PMTR | | (2) |
| 3 | | START Timer_30 | | | |
| 4 | L0 | ?PMF_Frame2 | PMFGetResp_PMTR | PASS | (3) |
| 5 | | ?OTHERWISE | | | |
| 6 | | GOTO L0 | | | |
| 7 | | ?TIMEOUT Timer_30 | | FAIL | (4) |
| **Detailed Comments:**<br>(1) Call the subroutine “INIT_RING” from the RMT ATS to bring the ring up. The ring is operational.<br>(2) Tester sends a PMF get request frame to inquire the current PATHMaxT_Req of the IUT.<br>(3) Receive the current PATHMaxT_Req of 165 milliseconds (initial value) from the IUT.<br>(4) IUT does not respond within 30 seconds. | | | | | |



Copyright International Organization for Standardization
Provided by IHS under license with ISO
No reproduction or networking permitted without license from IHS
Not for Resale

**Test Case Dynamic Behavior**

**Test Case Name** : fddiPORTMyType
**Group** : FDDI_MIB/PORT
**Purpose** : Verify the port type of the IUT.
**Default** :
**Comments** : Assume IUT is SM-DAS.

| Nr | Label | Behavior Description | Constraints Ref | Verdict | Comments |
|---|---|---|---|---|---|
| 1 | | +INIT_RING | | | (1) |
| 2 | | !PMF_Frame1 | PMFGetReq_PMT | | (2) |
| 3 | | START Timer_30 | | | |
| 4 | L0 | ?PMF_Frame2 | PMFGetResp_PMT | PASS | (3) |
| 5 | | ?OTHERWISE | | | |
| 6 | | GOTO L0 | | | |
| 7 | | ?TIMEOUT Timer_30 | | FAIL | (4) |

**Detailed Comments:**

(1) Call the subroutine “INIT_RING” from the RMT ATS to bring the ring up. The ring is operational.
(2) Tester sends a PMF get request frame to inquire the port type of the IUT.
(3) Receive the port type of “port A” from the IUT.
(4) IUT does not respond within 30 seconds.

**Test Case Dynamic Behavior**

**Test Case Name** : fddiPORTNeighborType
**Group** : FDDI_MIB/PORT
**Purpose** : Verify the neighbor port type of the IUT.
**Default** :
**Comments** : Assume IUT is SM-DAS. This test case is mandatory if hardware present.

| Nr | Label | Behavior Description | Constraints Ref | Verdict | Comments |
|---|---|---|---|---|---|
| 1 | | +INIT_RING | | | (1) |
| 2 | | !PMF_Frame1 | PMFGetReq_PNT | | (2) |
| 3 | | START Timer_30 | | | |
| 4 | L0 | ?PMF_Frame2 | PMFGetResp_PNT | PASS | (3) |
| 5 | | ?OTHERWISE | | | |
| 6 | | GOTO L0 | | | |
| 7 | | ?TIMEOUT Timer_30 | | FAIL | (4) |

**Detailed Comments:**

(1) Call the subroutine “INIT_RING” from the RMT ATS to bring the ring up. The ring is operational.
(2) Tester sends a PMF get request frame to inquire the neighbor port type of the IUT.
(3) Receive the neighbor port type of “port B” from the IUT.
(4) IUT does not respond within 30 seconds.


Copyright International Organization for Standardization
Provided by IHS under license with ISO
No reproduction or networking permitted without license from IHS
Not for Resale

| Test Case Dynamic Behavior | | | | | |
|---|---|---|---|---|---|
| **Test Case Name** : fddiPORTCurrentPath<br>**Group** : FDDI_MIB/PORT<br>**Purpose** : To check a current path of a port.<br>**Default** :<br>**Comments** : This test case is mandatory if hardware present. | | | | | |
| **Nr** | **Label** | **Behavior Description** | **Constraints Ref** | **Verdict** | **Comments** |
| 1 | | +INIT_RING | | | (1) |
| 2 | | !PMF_Frame1 | PMFGetReq_PCP | | (2) |
| 3 | | START Timer_30 | | | |
| 4 | L0 | ?PMF_Frame2 | PMFGetResp_PCP | PASS | (3) |
| 5 | | ?OTHERWSIE | | | |
| 6 | | GOTO L0 | | | |
| 7 | | ?TIMEOUT Timer_30 | | FAIL | (4) |
| **Detailed Comments:**<br>(1) Call the subroutine “INIT_RING” from the RMT ATS to bring the ring up. The ring is operational.<br>(2) Tester sends a PMF get request frame to check the path into which this port is currently inserted.<br>(3) Receive current path of the requested port from the IUT.<br>(4) IUT does not respond within 30 seconds. | | | | | |

| Test Case Dynamic Behavior | | | | | |
|---|---|---|---|---|---|
| **Test Case Name** : fddiPORTRequestedPaths_A<br>**Group** : FDDI_MIB/PORT<br>**Purpose** : Check the requested paths of IUT port A.<br>**Default** :<br>**Comments** : Assume IUT is SM-DAS. | | | | | |
| **Nr** | **Label** | **Behavior Description** | **Constraints Ref** | **Verdict** | **Comments** |
| 1 | | +INIT_RING | | | (1) |
| 2 | | !PMF_Frame1 | PMFGetReq_PRPA | | (2) |
| 3 | | START Timer_30 | | | |
| 4 | L0 | ?PMF_Frame2 | PMFGetResp_PRPA | PASS | (3) |
| 5 | | ?OTHERWISE | | | |
| 6 | | GOTO L0 | | | |
| 7 | | ?TIMEOUT Timer_30 | | FAIL | (4) |
| **Detailed Comments:**<br>(1) Call the subroutine “INIT_RING” from the RMT ATS to bring the ring up. The ring is operational.<br>(2) Tester sends a PMF get request frame to inquire the port requested paths of IUT port A.<br>(3) Receive the port requested paths (default setting) for port A from the IUT.<br>(4) IUT does not respond within 30 seconds. | | | | | |



Copyright International Organization for Standardization
Provided by IHS under license with ISO
No reproduction or networking permitted without license from IHS
Not for Resale

| Test Case Dynamic Behavior | | | | | |
|---|---|---|---|---|---|
| **Test Case Name** : fddiPORTRequestedPaths_B1<br>**Group** : FDDI_MIB/PORT<br>**Purpose** : Check the requested paths of IUT port B.<br>**Default** :<br>**Comments** : Assume IUT is SM-DAS. | | | | | |
| **Nr** | **Label** | **Behavior Description** | **Constraints Ref** | **Verdict** | **Comments** |
| 1 | | +INIT_RING | | | (1) |
| 2 | | !PMF_Frame1 | PMFGetReq_PRPB1 | | (2) |
| 3 | | START Timer_30 | | | |
| 4 | L0 | ?PMF_Frame2 | PMFGetResp_PRPB1 | PASS | (3) |
| 5 | | ?OTHERWISE | | | |
| 6 | | GOTO L0 | | | |
| 7 | | ?TIMEOUT Timer_30 | | FAIL | (4) |
| **Detailed Comments:**<br>(1) Call the subroutine “INIT_RING” from the RMT ATS to bring the ring up. The ring is operational.<br>(2) Tester sends a PMF get request frame to inquire the port requested paths of IUT port B.<br>(3) Receive the port requested paths (default setting) for port B from the IUT (SM-DAS).<br>(4) IUT does not respond within 30 seconds. | | | | | |

| Test Case Dynamic Behavior | | | | | |
|---|---|---|---|---|---|
| **Test Case Name** : fddiPORTRequestedPaths_B2<br>**Group** : FDDI_MIB/PORT<br>**Purpose** : Check the requested paths of IUT port B.<br>**Default** :<br>**Comments** : Assume IUT is DM-DAS. | | | | | |
| **Nr** | **Label** | **Behavior Description** | **Constraints Ref** | **Verdict** | **Comments** |
| 1 | | +INIT_RING | | | (1) |
| 2 | | !PMF_Frame1 | PMFGetReq_PRPB2 | | (2) |
| 3 | | START Timer_30 | | | |
| 4 | L0 | ?PMF_Frame2 | PMFGetResp_PRPB2 | PASS | (3) |
| 5 | | ?OTHERWISE | | | |
| 6 | | GOTO L0 | | | |
| 7 | | ?TIMEOUT Timer_30 | | FAIL | (4) |
| **Detailed Comments:**<br>(1) Call the subroutine “INIT_RING” from the RMT ATS to bring the ring up. The ring is operational.<br>(2) Tester sends a PMF get request frame to inquire the port requested paths of IUT port B.<br>(3) Receive the port requested paths (default setting) for port B from the IUT (DM-DAS).<br>(4) IUT does not respond within 30 seconds. | | | | | |


Copyright International Organization for Standardization
Provided by IHS under license with ISO
No reproduction or networking permitted without license from IHS
Not for Resale

| Test Case Dynamic Behavior | | | | | |
|---|---|---|---|---|---|
| **Test Case Name** : fddiPORTRequestedPaths_S<br>**Group** : FDDI_MIB/PORT<br>**Purpose** : Check the requested paths of IUT port S.<br>**Default** :<br>**Comments** : Assume IUT is SAS. | | | | | |
| **Nr** | **Label** | **Behavior Description** | **Constraints Ref** | **Verdict** | **Comments** |
| 1 | | +INIT_RING | | | (1) |
| 2 | | !PMF_Frame1 | PMFGetReq_PRPS | | (2) |
| 3 | | START Timer_30 | | | |
| 4 | L0 | ?PMF_Frame2 | PMFGetResp_PRPS | PASS | (3) |
| 5 | | ?OTHERWISE | | | |
| 6 | | GOTO L0 | | | |
| 7 | | ?TIMEOUT Timer_30 | | FAIL | (4) |
| **Detailed Comments:**<br>(1) Call the subroutine “INIT_RING” from the RMT ATS to bring the ring up. The ring is operational.<br>(2) Tester sends a PMF get request frame to inquire the port requested paths of IUT port S.<br>(3) Receive the port requested paths (default setting) for port S from the IUT (SAS).<br>(4) IUT does not respond within 30 seconds. | | | | | |

| Test Case Dynamic Behavior | | | | | |
|---|---|---|---|---|---|
| **Test Case Name** : fddiPORTRequestedPaths_M<br>**Group** : FDDI_MIB/PORT<br>**Purpose** : Check the requested paths of IUT port M.<br>**Default** :<br>**Comments** : Assume IUT is a concentrator. | | | | | |
| **Nr** | **Label** | **Behavior Description** | **Constraints Ref** | **Verdict** | **Comments** |
| 1 | | +INIT_RING | | | (1) |
| 2 | | !PMF_Frame1 | PMFGetReq_PRPM | | (2) |
| 3 | | START Timer_30 | | | |
| 4 | L0 | ?PMF_Frame2 | PMFGetResp_PRPM | PASS | (3) |
| 5 | | ?OTHERWISE | | | |
| 6 | | GOTO L0 | | | |
| 7 | | ?TIMEOUT Timer_30 | | FAIL | (4) |
| **Detailed Comments:**<br>(1) Call the subroutine “INIT_RING” from the RMT ATS to bring the ring up. The ring is operational.<br>(2) Tester sends a PMF get request frame to inquire the port requested paths of IUT port M.<br>(3) Receive the port requested paths (default setting) for port M from the IUT.<br>(4) IUT does not respond within 30 seconds. | | | | | |



Copyright International Organization for Standardization
Provided by IHS under license with ISO
No reproduction or networking permitted without license from IHS
Not for Resale

**Test Case Dynamic Behavior**

**Test Case Name** : fddiPORTMACPlacement
**Group** : FDDI_MIB/PORT
**Purpose** : To check a MAC whose transmit path exits the station via a known port.
**Default** :
**Comments** : Assume IUT is SM-DAS. This test case is mandatory if hardware present.

| Nr | Label | Behavior Description | Constraints Ref | Verdict | Comments |
|---|---|---|---|---|---|
| 1 | | +INIT_RING | | | (1) |
| 2 | | !PMF_Frame1 | PMFGetReq_PMP | | (2) |
| 3 | | START Timer_30 | | | |
| 4 | L0 | ?PMF_Frame2 | PMFGetResp_PMP | PASS | (3) |
| 5 | | ?OTHERWISE | | | |
| 6 | | GOTO L0 | | | |
| 7 | | ?TIMEOUT Timer_30 | | FAIL | (4) |

**Detailed Comments:**

(1) Call the subroutine “INIT_RING” from the RMT ATS to bring the ring up. The ring is operational.
(2) Tester sends a PMF get request frame to check the MAC whose transmit path exits the station via a known port.
(3) Receive the index of the MAC whose transmit path exits the station via a known port.
(4) IUT does not respond within 30 seconds.

**Test Case Dynamic Behavior**

**Test Case Name** : fddiPORTAvailablePaths
**Group** : FDDI_MIB/PORT
**Purpose** : Check the available paths of IUT port A (or port B).
**Default** :
**Comments** : Assume IUT is SM-DAS. This test case is mandatory if hardware present.

| Nr | Label | Behavior Description | Constraints Ref | Verdict | Comments |
|---|---|---|---|---|---|
| 1 | | +INIT_RING | | | (1) |
| 2 | | !PMF_Frame1 | PMFGetReq_PAP | | (2) |
| 3 | | START Timer_30 | | | |
| 4 | L0 | ?PMF_Frame2 | PMFGetResp_PAP | PASS | (3) |
| 5 | | ?OTHERWISE | | | |
| 6 | | GOTO L0 | | | |
| 7 | | ?TIMEOUT Timer_30 | | FAIL | (4) |

**Detailed Comments:**

(1) Call the subroutine “INIT_RING” from the RMT ATS to bring the ring up. The ring is operational.
(2) Tester sends a PMF get request frame to inquire the available paths of IUT port A (or port B).
(3) Receive the available paths of primary and secondary paths (default value) for port A (or port B) from the IUT.
(4) IUT does not respond within 30 seconds.


Copyright International Organization for Standardization
Provided by IHS under license with ISO
No reproduction or networking permitted without license from IHS
Not for Resale

**Test Case Dynamic Behavior**

**Test Case Name** : fddiPORTMACLoop_Time
**Group** : FDDI_MIB/PORT
**Purpose** : Verify that the value of MAC Local Loop time, T_Next(9), can be modified using the PMF set protocol.
**Default** :
**Comments** : Assume IUT is SM-DAS. This test case is mandatory if hardware present.

| Nr | Label | Behavior Description | Constraints Ref | Verdict | Comments |
|---|---|---|---|---|---|
| 1 | | +INIT_RING | | | (1) |
| 2 | | !PMF_Frame1 | PMFGetReq_PMLT1 | | (2) |
| 3 | | START Timer_30 | | | |
| 4 | L2 | ?PMF_Frame2 | PMFGetResp_PMLT1 | | (3) |
| 5 | | !PMF_Frame3 | PMFSetReq_PMLT | | (4) |
| 6 | | START Timer_30 | | | |
| 7 | L1 | ?PMF_Frame4 | PMFSetResp_PMLT | | (5) |
| 8 | | !PMF-Frame1 | PMFGetReq_PMLT2 | | (6) |
| 9 | | START Timer_30 | | | |
| 10 | L0 | ?PMF_Frame 2 | PMFGetResp_PMLT2 | PASS | (7) |
| 11 | | ?OTHERWISE | | | |
| 12 | | GOTO L0 | | | |
| 13 | | ?TIMEOUT Timer_30 | | FAIL | (8) |
| 14 | | ?OTHERWISE | | | |
| 15 | | GOTO L1 | | | |
| 16 | | ?TIMEOUT Timer_30 | | FAIL | (8) |
| 17 | | ?OTHERWISE | | | |
| 18 | | GOTO L0 | | | |
| 19 | | ?TIMEOUT Timer_30 | | FAIL | (8) |

**Detailed Comments:**

(1) Call the subroutine “INIT_RING” from the RMT ATS to bring the ring up. The ring is operational.
(2) Tester sends a PMF get request frame to inquire the MAC Loop time of the IUT.
(3) Receive the MAC Loop time from the IUT.
(4) Tester sends a PMF set request to change the MAC Loop time to 210 milliseconds.
(5) IUT changes its MAC Loop time to 210 ms.
(6) Tester sends a PMF get request frame to check the current MAC Loop time of the IUT.
(7) Receive the current MAC Loop time of 210 ms.
(8) IUT does not respond within 30 seconds.

**Test Case Dynamic Behavior**

**Test Case Name** : fddiPORTPMDClass
**Group** : FDDI_MIB/PORT
**Purpose** : To check the PMD type of a port.
**Default** :
**Comments** : This test case is mandatory if hardware present.

| Nr | Label | Behavior Description | Constraints Ref | Verdict | Comments |
|---|---|---|---|---|---|
| 1 | | +INIT_RING | | | (1) |
| 2 | | !PMF_Frame1 | PMFGetReq_PPC | | (2) |
| 3 | | START Timer_30 | | | |
| 4 | L0 | ?PMF_Frame2 | PMFGetResp_PPC | PASS | (3) |
| 5 | | ?OTHERWISE | | | |
| 6 | | GOTO L0 | | | |
| 7 | | ?TIMEOUT Timer_30 | | FAIL | (4) |

**Detailed Comments:**

(1) Call the subroutine “INIT_RING” from the RMT ATS to bring the ring up. The ring is operational.
(2) Tester sends a PMF get request frame to check the PMD type of a port.
(3) Receive the PMD type of a port.
(4) IUT does not respond within 30 seconds.



Copyright International Organization for Standardization
Provided by IHS under license with ISO
No reproduction or networking permitted without license from IHS
Not for Resale

| Test Case Dynamic Behavior | | | | | |
|---|---|---|---|---|---|
| **Test Case Name** : fddiPORTIndex<br>**Group** : FDDI_MIB/PORT<br>**Purpose** : Check the index for PORT object instances of the IUT.<br>**Default** :<br>**Comments** : | | | | | |
| **Nr** | **Label** | **Behavior Description** | **Constraints Ref** | **Verdict** | **Comments** |
| 1 | | +INIT_RING | | | (1) |
| 2 | | !PMF_Frame1 | PMFGetReq_PRTI | | (2) |
| 3 | | START Timer_30 | | | |
| 4 | L0 | ?PMF_Frame2 | PMFGetResp_PRTI | PASS | (3) |
| 5 | | ?OTHERWISE | | | |
| 6 | | GOTO L0 | | | |
| 7 | | ?TIMEOUT Timer_30 | | FAIL | (4) |
| **Detailed Comments:**<br>(1) Call the subroutine “INIT_RING” from the RMT ATS to bring the ring up. The ring is operational.<br>(2) Tester sends a PMF get request frame with Resource_Index of zero to inquire the indexes of IUT PORT object instances.<br>(3) Receive a list of indexes of IUT PORT object instances.<br>(4) IUT does not respond within 30 seconds. | | | | | |

| Test Case Dynamic Behavior | | | | | |
|---|---|---|---|---|---|
| **Test Case Name** : fddiPORTPC_LS<br>**Group** : FDDI_MIB/PORT<br>**Purpose** : Check the current line state received by an IUT port.<br>**Default** :<br>**Comments** : Assume IUT is SM-DAS in a Thru configuration. This test case is optional and performed only if hardware present. | | | | | |
| **Nr** | **Label** | **Behavior Description** | **Constraints Ref** | **Verdict** | **Comments** |
| 1 | | +INIT_RING | | | (1) |
| 2 | | !PMF_Frame1 | PMFGetReq_PPL | | (2) |
| 3 | | START Timer_30 | | | |
| 4 | L0 | ?PMF_Frame2 | PMFGetResp_PPL | PASS | (3) |
| 5 | | ?OTHERWISE | | | |
| 6 | | GOTO L0 | | | |
| 7 | | ?TIMEOUT Timer_30 | | FAIL | (4) |
| **Detailed Comments:**<br>(1) Call the subroutine “INIT_RING” from the RMT ATS to bring the ring up. The ring is operational.<br>(2) Tester sends a PMF get request frame to inquire the PC_LS received by an IUT port.<br>(3) Receive PC_LS of “pdr” from the IUT.<br>(4) IUT does not respond within 30 seconds. | | | | | |


Copyright International Organization for Standardization
Provided by IHS under license with ISO
No reproduction or networking permitted without license from IHS
Not for Resale

**Test Case Dynamic Behavior**

**Test Case Name** : fddiPORTLer_Cutoff
**Group** : FDDI_MIB/PORT
**Purpose** : Check the link error rate estimate, at which a link connection will be broken, of an IUT port.
**Default** :
**Comments** : Assume IUT is SM-DAS in a Thru configuration.

| Nr | Label | Behavior Description | Constraints Ref | Verdict | Comments |
|---|---|---|---|---|---|
| 1 | | +INIT_RING | | | (1) |
| 2 | | !PMF_Frame1 | PMFGetReq_PLC | | (2) |
| 3 | | START Timer_30 | | | |
| 4 | L0 | ?PMF_Frame2 | PMFGetResp_PLC | PASS | (3) |
| 5 | | ?OTHERWISE | | | |
| 6 | | GOTO L0 | | | |
| 7 | | ?TIMEOUT Timer_30 | | FAIL | (4) |

**Detailed Comments:**

(1) Call the subroutine “INIT_RING” from the RMT ATS to bring the ring up. The ring is operational.
(2) Tester sends a PMF get request frame to inquire the Ler_Cutoff value of an IUT port.
(3) Receive the Ler_Cutoff value (default value) from the IUT.
(4) IUT does not respond within 30 seconds.

**Test Case Dynamic Behavior**

**Test Case Name** : fddiPORTLer_Alarm
**Group** : FDDI_MIB/PORT
**Purpose** : Check the link error rate estimate, at which a link connection will generate an alarm, of an IUT port.
**Default** :
**Comments** : Assume IUT is SM-DAS in a Thru configuration.

| Nr | Label | Behavior Description | Constraints Ref | Verdict | Comments |
|---|---|---|---|---|---|
| 1 | | +INIT_RING | | | (1) |
| 2 | | !PMF_Frame1 | PMFGetReq_PLA | | (2) |
| 3 | | START Timer_30 | | | |
| 4 | L0 | ?PMF_Frame2 | PMFGetResp_PLA | PASS | (3) |
| 5 | | ?OTHERWISE | | | |
| 6 | | GOTO L0 | | | |
| 7 | | ?TIMEOUT Timer_30 | | FAIL | (4) |

**Detailed Comments:**

(1) Call the subroutine “INIT_RING” from the RMT ATS to bring the ring up. The ring is operational.
(2) Tester sends a PMF get request frame to inquire the Ler_Alarm value of an IUT port.
(3) Receive the Ler_Alarm value (default value) from the IUT.
(4) IUT does not respond within 30 seconds.



Copyright International Organization for Standardization
Provided by IHS under license with ISO
No reproduction or networking permitted without license from IHS
Not for Resale

| Test Case Dynamic Behavior | | | | | |
|---|---|---|---|---|---|
| **Test Case Name** : fddiPORTConnectState<br>**Group** : FDDI_MIB/PORT<br>**Purpose** : Check the current connect state of an IUT port.<br>**Default** :<br>**Comments** : Assume IUT is SM-DAS in a Thru configuration. This test case is mandatory if hardware present. | | | | | |
| **Nr** | **Label** | **Behavior Description** | **Constraints Ref** | **Verdict** | **Comments** |
| 1 | | +INIT_RING | | | (1) |
| 2 | | !PMF_Frame1 | PMFGetReq_PCS | | (2) |
| 3 | | START Timer_30 | | | |
| 4 | L0 | ?PMF_Frame2 | PMFGetResp_PCS | PASS | (3) |
| 5 | | ?OTHERWISE | | | |
| 6 | | GOTO L0 | | | |
| 7 | | ?TIMEOUT Timer_30 | | FAIL | (4) |
| **Detailed Comments:**<br>(1) Call the subroutine “INIT_RING” from the RMT ATS to bring the ring up. The ring is operational.<br>(2) Tester sends a PMF get request frame to inquire the connect state of an IUT port.<br>(3) Receive the connect state of the IUT port.<br>(4) IUT does not respond within 30 seconds. | | | | | |

| Test Case Dynamic Behavior | | | | | |
|---|---|---|---|---|---|
| **Test Case Name** : fddiPORTPCMState<br>**Group** : FDDI_MIB/PORT<br>**Purpose** : Check the current PCM state of an IUT port.<br>**Default** :<br>**Comments** : Assume IUT is SM-DAS in a Thru configuration. This test case is mandatory if hardware present. | | | | | |
| **Nr** | **Label** | **Behavior Description** | **Constraints Ref** | **Verdict** | **Comments** |
| 1 | | +INIT_RING | | | (1) |
| 2 | | !PMF_Frame1 | PMFGetReq_PPS | | (2) |
| 3 | | START Timer_30 | | | |
| 4 | L0 | ?PMF_Frame2 | PMFGetResp_PPS | PASS | (3) |
| 5 | | ?OTHERWISE | | | |
| 6 | | GOTO L0 | | | |
| 7 | | ?TIMEOUT Timer_30 | | FAIL | (4) |
| **Detailed Comments:**<br>(1) Call the subroutine “INIT_RING” from the RMT ATS to bring the ring up. The ring is operational.<br>(2) Tester sends a PMF get request frame to inquire the PCM state of an IUT port.<br>(3) Receive the PCM state of the IUT port.<br>(4) IUT does not respond within 30 seconds. | | | | | |



Copyright International Organization for Standardization
Provided by IHS under license with ISO
No reproduction or networking permitted without license from IHS
Not for Resale

**Test Case Dynamic Behavior**

**Test Case Name** : fddiPORTPC_Withhold
**Group** : FDDI_MIB/PORT
**Purpose** : Check the PC_Withhold value of an IUT port.
**Default** :
**Comments** : Assume IUT is SM-DAS in a Thru configuration. This test case is mandatory if hardware present.

| Nr | Label | Behavior Description | Constraints Ref | Verdict | Comments |
|---|---|---|---|---|---|
| 1 | | +INIT_RING | | | (1) |
| 2 | | !PMF_Frame1 | PMFGetReq_PPW | | (2) |
| 3 | | START Timer_30 | | | |
| 4 | L0 | ?PMF_Frame2 | PMFGetResp_PPW | PASS | (3) |
| 5 | | ?OTHERWISE | | | |
| 6 | | GOTO L0 | | | |
| 7 | | ?TIMEOUT Timer_30 | | FAIL | (4) |

**Detailed Comments:**

(1) Call the subroutine “INIT_RING” from the RMT ATS to bring the ring up. The ring is operational.
(2) Tester sends a PMF get request frame to inquire the PC_Withhold value of an IUT port.
(3) Receive the PC_Withhold value of the IUT port.
(4) IUT does not respond within 30 seconds.

**Test Case Dynamic Behavior**

**Test Case Name** : fddiPORTHardwarePresent
**Group** : FDDI_MIB/PORT
**Purpose** : Check the presence of underlying hardware support for an IUT port object.
**Default** :
**Comments** : Assume IUT is SM-DAS and there is a presence of underlying hardware support for an IUT port object.

| Nr | Label | Behavior Description | Constraints Ref | Verdict | Comments |
|---|---|---|---|---|---|
| 1 | | +INIT_RING | | | (1) |
| 2 | | !PMF_Frame1 | PMFGetReq_PHP | | (2) |
| 3 | | START Timer_30 | | | |
| 4 | L0 | ?PMF_Frame2 | PMFGetResp_PHP | PASS | (3) |
| 5 | | ?OTHERWISE | | | |
| 6 | | GOTO L0 | | | |
| 7 | | ?TIMEOUT Timer_30 | | FAIL | (4) |

**Detailed Comments:**

(1) Call the subroutine “INIT_RING” from the RMT ATS to bring the ring up. The ring is operational.
(2) Tester sends a PMF get request frame to inquire the presence of underlying hardware support for an IUT port object.
(3) Receive the presence of underlying hardware support for the IUT port object of “present” from the IUT.
(4) IUT does not respond within 30 seconds.



Copyright International Organization for Standardization
Provided by IHS under license with ISO
No reproduction or networking permitted without license from IHS
Not for Resale

| Test Case Dynamic Behavior | | | | | |
|---|---|---|---|---|---|
| **Test Case Name** : fddiSMTStationAction_DA<br>**Group** : FDDI_MIB/ACTIONS_NOTIFICATIONS<br>**Purpose** : Verify that Disable_A action can be invoked using the PMF set protocol.<br>**Default** :<br>**Comments** : Assume IUT is SM-DAS in a Thru configuration. | | | | | |
| **Nr** | **Label** | **Behavior Description** | **Constraints Ref** | **Verdict** | **Comments** |
| 1 | | +INIT_RING | | | (1) |
| 2 | | !PMF_Frame3 | PMFSetReq_DisableA | | (2) |
| 3 | | START Timer_30 | | | |
| 4 | L0 | ?SRF_Frame | SRF_Ann_CWB | PASS | (3) |
| 5 | | ?OTHERWISE | | | |
| 6 | | GOTO L0 | | | |
| 7 | | ?TIMEOUT Timer_30 | | FAIL | (4) |
| **Detailed Comments:**<br>(1) Call the subroutine “INIT_RING” from the RMT ATS to bring the ring up. The ring is operational.<br>(2) Tester sends a PMF set request to cause a PC_Disable on the IUT port A. (Tester port B down)<br>(3) Receive a status report frame of PeerWrapCondition (c_wrap_b) from the IUT.<br>(4) IUT does not respond within 30 seconds. | | | | | |

| Test Case Dynamic Behavior | | | | | |
|---|---|---|---|---|---|
| **Test Case Name** : fddiSMTStationAction_DB<br>**Group** : FDDI_MIB/ACTIONS_NOTIFICATIONS<br>**Purpose** : Verify that Disable_B action can be invoked using the PMF set protocol.<br>**Default** :<br>**Comments** : Assume IUT is SM-DAS in a Thru configuration. | | | | | |
| **Nr** | **Label** | **Behavior Description** | **Constraints Ref** | **Verdict** | **Comments** |
| 1 | | +INIT_RING | | | (1) |
| 2 | | !PMF_Frame3 | PMFSetReq_DisableB | | (2) |
| 3 | | START Timer_30 | | | |
| 4 | L0 | ?SRF_Frame | SRF_Ann_CWA | PASS | (3) |
| 5 | | ?OTHERWISE | | | |
| 6 | | GOTO L0 | | | |
| 7 | | ?TIMEOUT Timer_30 | | FAIL | (4) |
| **Detailed Comments:**<br>(1) Call the subroutine “INIT_RING” from the RMT ATS to bring the ring up. The ring is operational.<br>(2) Tester sends a PMF set request to cause a PC_Disable on the IUT port B. (Tester port A down)<br>(3) Receive a status report frame of PeerWrapCondition (c_wrap_a) from the IUT.<br>(4) IUT does not respond within 30 seconds. | | | | | |


Copyright International Organization for Standardization
Provided by IHS under license with ISO
No reproduction or networking permitted without license from IHS
Not for Resale

**Test Case Dynamic Behavior**

**Test Case Name** : fddiSMTHoldCondition_Prm
**Group** : FDDI_MIB/ACTIONS_NOTIFICATIONS
**Purpose** : Check the initial value of the HoldState. If the initial value is “not_holding” and the Hold function is implemented, interrupt the link exiting from the Tester A port, so that the input to the IUT B port is dark. Verify that IUT enters the “holding_prm” state and transmits an SRF with the Hold condition asserted.
**Default** :
**Comment** : This test case is optional. It is applied only to a DM-DAS where a dual ring is formed with two token paths (primary & secondary) and the Hold function is implemented.

| Nr | Label | Behavior Description | Constraints Ref | Verdict | Comments |
|---|---|---|---|---|---|
| 1 | | +INIT_RING | | | (1) |
| 2 | | !PMF_Frame1 | PMFGetreq_SCC1 | | (2) |
| 3 | | START Timer-30 | | | |
| 4 | L2 | ?PMF_Frame2 | PMFGetresp_SCC1 | | (3) |
| 5 | | !PMF_Frame1 | PMFGetReq_HS1 | | (4) |
| 6 | | START Timer_30 | | | |
| 7 | L1 | ?PMF_Frame2 | PMFGetResp_HS1 | | (5) |
| 8 | | START Timer_TSR(2*T_Limit) | | | (6) |
| 9 | L0 | ?SRF_Frame | SRF_Ann_HP | PASS | (7) |
| 10 | | ?OTHERWISE | | | |
| 11 | | GOTO L0 | | | |
| 12 | | ?TIMEOUT Timer_TSR | | FAIL | (8) |
| 13 | | ?OTHERWISE | | | |
| 14 | | GOTO L1 | | | |
| 15 | | ?TIMEOUT Timer_30 | | FAIL | (9) |
| 16 | | ?OTHERWISE | | | |
| 17 | | GOTO L2 | | | |
| 18 | | ?TIMEOUT Timer_30 | | FAIL | (9) |

**Detailed Comments:**

(1) Call the subroutine “INIT_RING” from the RMT ATS to bring the ring up. The ring is operational.
(2) Send a PMF get request frame to check the configuration capabilities of the IUT.
(3) IUT supports the optional Hold function.
(4) Send a PMF get request frame to check the initial value of the HoldState existing in the IUT.
(5) The initial value of HoldState is “not_holding”.
(6) Interrupt the link exiting from the Tester A port, so that the input to the IUT B port is dark. Wait for the IUT to enter the “holding_prm” state and to transmit an SRF with Hold condition asserted.
(7) Receive an SRF with Hold condition asserted from the IUT.
(8) IUT does not respond within 2(T_Limit).
(9) IUT does not respond within 30 seconds.



Copyright International Organization for Standardization
Provided by IHS under license with ISO
No reproduction or networking permitted without license from IHS
Not for Resale

**Test Case Dynamic Behavior**

**Test Case Name** : fddiSMTHoldCondition_Sec
**Group** : FDDI_MIB/ACTIONS_NOTIFICATIONS
**Purpose** : Check the initial value of the HoldState. If the initial value is “not_holding” and the Hold function is implemented, interrupt the link exiting from the Tester B port, so that the input to the IUT A port is dark. Verify that IUT enters the “holding_sec” state and transmits an SRF with the Hold condition asserted.
**Default** :
**Comment** : This test case is optional. It is applied only to a DM-DAS where a dual ring is formed with two token paths (primary & secondary) and the Hold function is implemented.

| Nr | Label | Behavior Description | Constraints Ref | Verdict | Comments |
|---|---|---|---|---|---|
| 1 | | +INIT_RING | | | (1) |
| 2 | | !PMF_Frame1 | PMFGetreq_SCC1 | | (2) |
| 3 | | START Timer-30 | | | |
| 4 | L2 | ?PMF_Frame2 | PMFGetresp_SCC1 | | (3) |
| 5 | | !PMF_Frame1 | PMFGetReq_HS1 | | (4) |
| 6 | | START Timer_30 | | | |
| 7 | L1 | ?PMF_Frame2 | PMFGetResp_HS1 | | (5) |
| 8 | | START Timer_TSR(2*T_Limit) | | | (6) |
| 9 | L0 | ?SRF_Frame | SRF_Ann_HS | PASS | (7) |
| 10 | | ?OTHERWISE | | | |
| 11 | | GOTO L0 | | | |
| 12 | | ?TIMEOUT Timer_TSR | | FAIL | (8) |
| 13 | | ?OTHERWISE | | | |
| 14 | | GOTO L1 | | | |
| 15 | | ?TIMEOUT Timer_30 | | FAIL | (9) |
| 16 | | ?OTHERWISE | | | |
| 17 | | GOTO L2 | | | |
| 18 | | ?TIMEOUT Timer_30 | | FAIL | (9) |

**Detailed Comments:**

(1) Call the subroutine “INIT_RING” from the RMT ATS to bring the ring up. The ring is operational.
(2) Send a PMF get request frame to check the configuration capabilities of the IUT.
(3) IUT supports the optional Hold function.
(4) Send a PMF get request frame to check the initial value of the HoldState existing in the IUT.
(5) The initial value of HoldState is “not_holding”.
(6) Interrupt the link exiting from the Tester B port, so that the input to the IUT A port is dark. Wait for the IUT to enter the “holding_sec” state and to transmit an SRF with Hold condition asserted.
(7) Receive an SRF with Hold condition asserted from the IUT.
(8) IUT does not respond within 2(T_Limit).
(9) IUT does not respond within 30 seconds.


Copyright International Organization for Standardization
Provided by IHS under license with ISO
No reproduction or networking permitted without license from IHS
Not for Resale

**Test Case Dynamic Behavior**

**Test Case Name** : fddiMACDuplicateAddressCondition
**Group** : FDDI_MIB/ACTIONS_NOTIFICATIONS
**Purpose** : Verify that MACDuplicateAddressCondition is active when either fddiMACDA_Flag or fddiMACUNDA_Flag is set.
**Default** :
**Comments** : Assume IUT is SM-DAS.

| Nr | Label | Behavior Description | Constraints Ref | Verdict | Comments |
|---|---|---|---|---|---|
| 1 | | +INIT_RING | | | (1) |
| 2 | | !NIF_Frame | NIF_TSTR_Ann | | (2) |
| 3 | | START Timer_30 | | | |
| 4 | L0 | ?SRF_Frame | SRF_Ann_UNDA | PASS | (3) |
| 5 | | ?OTHERWISE | | | |
| 6 | | GOTO L0 | | | |
| 7 | | ?TIMEOUT Timer_30 | | FAIL | (4) |

**Detailed Comments:**

(1) Call the subroutine “INIT_RING” from the RMT ATS to bring the ring up. The ring is operational.
(2) Tester sends a NIF announcement frame with StationState.DupAddress.Myduplicate=SET to indicate a duplicate condition on the ring. (UNDA_Flag=SET)
(3) Receive a SRF of DuplicateAddressCondition from the IUT.
(4) IUT does not respond within 30 seconds.



Copyright International Organization for Standardization
Provided by IHS under license with ISO
No reproduction or networking permitted without license from IHS
Not for Resale

Blank page

--`,,```,,,,````-`-`,,`,,`,`,,`---



Copyright International Organization for Standardization
Provided by IHS under license with ISO
No reproduction or networking permitted without license from IHS
Not for Resale

# Annex A
(normative)

## PIXIT Proforma for Fiber Distributed Data Interface (FDDI) Station Management (SMT) Ring Management (RMT)

---

### Copyright release for PIXIT proformas

User of this standard may freely reproduce the PIXIT proforma in this standard, so that it may be used for its intended purpose and may further publish the completed PIXIT.

--`,,```,,,,````-`-`,,`,,`,`,,`---



Copyright International Organization for Standardization
Provided by IHS under license with ISO
No reproduction or networking permitted without license from IHS
Not for Resale

## Identification summary

PIXIT Number:

Means of Testing:

Test of Laboratory Name:

Date of Issue:

Issued to:

## Abstract test suite summary

Protocol Standard:
ISO/IEC 9314-6:1998 Information Systems - Fiber Distributed Data Interface (FDDI) Station Management (SMT) Ring Management (RMT)

ATS Standard:
ISO/IEC 9314-25:1998

Abstract Test Method:
Remote Single Layer

## Client

Client Identification:

Client Test Manager:

Test Facilities Required:



--`,,```,,,,````-`-`,,`,,`,`,,`---
Copyright International Organization for Standardization
Provided by IHS under license with ISO
No reproduction or networking permitted without license from IHS
Not for Resale

## Test Laboratory

Test Laboratory Identification:

Test Laboratory Manager:

Network Address(es):

Instructions for Completion:

## IUT

Name:

Version:

Machine Configuration:

Operating System Identification:

Upper Tester Identification (if any):

Upper Test Validation Date (if appropriate):

IUT Identification:

PICS Reference for IUT:

Limitations of the IUT:



Copyright International Organization for Standardization
Provided by IHS under license with ISO
No reproduction or networking permitted without license from IHS
Not for Resale

1. The 48-bit address to be used by stations in the ring, stated in hexadecimal digits, most significant first:
   1.1 IUT Address _____
   1.2 IUT Local Address _____
   1.3 IUT Universal Address _____
   1.4 Tester Address _____
   1.5 Other Address* _____
   (* To be used for testing of frames not originated from or addressed to either the IUT or Tester, the station will not be physically connected during testing.)

2. Does the IUT support Restricted Token Monitoring?
   Yes___ No___

3. The values of timers and parameters to be used by the IUT:

   3.1 Target token rotation timer to be requested, T_Req
      3.1.1 T_REQ _____ msec for IUT's MAC
      3.1.2 T_REQ1 _____ msec for IUT's MAC
      3.1.3 T_REQB _____ msec for Other's MAC
   3.2 Maximum token rotation time, T_Max _____ msec

   3.3 Maximum time for restricted dialogue, T_Rmode _____ msec

4. Can the IUT be forced to generate a NIF request frame by a test operator?
   Yes___ No___


Copyright International Organization for Standardization
Provided by IHS under license with ISO
No reproduction or networking permitted without license from IHS
Not for Resale

# Annex B

(normative)

## PIXIT Proforma for Fiber Distributed Data Interface (FDDI) Station Management (SMT) Management Information Base (MIB)

### Copyright release for PIXIT proformas

User of this standard may freely reproduce the PIXIT proforma in this standard, so that it may be used for its intended purpose and may further publish the completed PIXIT.



Copyright International Organization for Standardization
Provided by IHS under license with ISO
No reproduction or networking permitted without license from IHS
Not for Resale

## Identification summary

PIXIT Number:

Means of Testing:

Test Laboratory Name :

Date of Issue:

Issued to:

## Abstract test suite summary

Protocol Standard:
ISO/IEC 9314-6:1998 Information Systems - Fiber Distributed Data Interface (FDDI) Station Management (SMT) Management Information Base (MIB)

ATS Standard:
ISO/IEC 9314-25:1998

Abstract Test Method:
Remote Single Layer

## Client

Client Identification:

Client Test Manager:

Test Facilities Required:



Copyright International Organization for Standardization
Provided by IHS under license with ISO
No reproduction or networking permitted without license from IHS
Not for Resale

## Test Laboratory

Test Laboratory Identification:

_____

Test Laboratory Manager:

_____

Network Address(es):

_____

Instructions for Completion:

## IUT

Name:

_____

Version:

_____

Machine Configuration:

_____

Operating System Identification:

_____

Upper Tester Identification (if any):

_____

Upper Tester Validation Date (if appropriate):

_____

IUT Identification:

_____

PICS Reference for IUT:

_____

Limitations of the IUT:



Copyright International Organization for Standardization
Provided by IHS under license with ISO
No reproduction or networking permitted without license from IHS
Not for Resale

1) The 48-bit address to be used by stations in the ring, stated in hexadecimal digits, most significant first:

1.1 IUT Address _____
1.2 Tester Address _____
1.3 Other Address* _____

* To be used for testing of frames not originated from or addressed to either the IUT or Tester, the station will not be physically connected during testing.

2) The values of timers and parameters to be used by the IUT:

2.1 The interval between successive iterations of the Neighbor Notification protocol.
T_Notify_____seconds.

2.2 Maximum propagation time for a Trace on an FDDI topology.
Trace_Max _____seconds.

2.3 The rate-limiting interval for the Status Report protocol.
T_Limit _____seconds.

2.4 Maximum interval between successive NIF receptions from the upstream and downstream neighbors to maintain neighbor information validity.
T_NN_Out _____seconds.

2.5 Maximum Ring Latency.
D_Max _____msec.

2.6 Maximum value of Token-Rotation Timer (TRT).

2.6.1 IUT
MAC1: T_Max1 _____msec.
MAC2: T_Max2 _____msec.
. . . .
. . . .
MACn: T_Maxn _____msec.

2.6.2 Tester
MAC1: T_Max1 _____msec.
MAC2: T_Max2 _____msec.
. . . .
. . . .
MACn: T_Maxn: _____msec.

2.7 Maximum value of Valid-Transmission Timer (TVX).

2.7.1 IUT
MAC1: TvxValue1 _____msec.
MAC2: TvxValue2 _____msec.
. . . .
. . . .
MACn: TvxValuen: _____msec.

2.7.2 Tester
MAC1: TvxValue1 _____msec.
MAC2: TvxValue2 _____msec.
. . . .
. . . .
MACn: TvxValuen _____msec.


Copyright International Organization for Standardization
Provided by IHS under license with ISO
No reproduction or networking permitted without license from IHS Not for Resale

2.8 A 2-octet integer value used to indicate an index of a port in the IUT.

Port A : '_____'H, Port M1 : '_____'H,
Port B : '_____'H, Port M2 : '_____'H,
Port S : '_____'H, . . .
. . .
Port Mp : '_____'H

2.9 A 2-octet integer value used to indicate an index of a MAC in the IUT.

MAC1 : '_____'H,
MAC2 : '_____'H,
. . .
. . .
MACn : '_____'H

3) Does IUT support fddiSMTManufacturerData attribute? YES _____ NO _____

If "yes", the manufacturer data to be used in hexadecimal digits, most significant first.

3.1 ManufacturerOUI : '_____'H
3.2 ManufacturerData : '_____'H

4) Description of the node:

4.1 IUT: Station _____ Concentrator _____
4.1.1 Number of MACs in IUT _____
4.1.2 Number of A, B, and S ports in IUT _____
4.1.3 Number of M ports in IUT _____

4.2 Tester: Station _____ Concentrator _____

5) Indicate path types that are available in the IUT, its MACs and Ports if hardware present.

5.1 Path types that are available in IUT:

Primary _____
Secondary _____
Local _____

5.2 Path types that are available for MACs of the IUT:

| MACs | Primary | Secondary | Local |
|---|---|---|---|
| MAC1 | _____ | _____ | _____ |
| MAC2 | _____ | _____ | _____ |
| . | . | . | . |
| . | . | . | . |
| MACn | _____ | _____ | _____ |

5.3 Path types that are available for Ports of the IUT:

| PORTs | Primary | Secondary | Local |
|---|---|---|---|
| Port A | _____ | _____ | _____ |
| Port B | _____ | _____ | _____ |
| Port S | _____ | _____ | _____ |
| Port M1 | _____ | _____ | _____ |
| Port M2 | _____ | _____ | _____ |
| . | . | . | . |
| . | . | . | . |
| Port Mp | _____ | _____ | _____ |



Copyright International Organization for Standardization
Provided by IHS under license with ISO
No reproduction or networking permitted without license from IHS Not for Resale

6) Indicate the path into which a MAC or Port is currently inserted in the IUT if hardware present.

6.1 The path into which a MAC is currently inserted in the IUT if hardware present.

| MACs | Primary | Secondary | Local |
|---|---|---|---|
| MAC1 | _____ | _____ | _____ |
| MAC2 | _____ | _____ | _____ |
| . | . | . | . |
| . | . | . | . |
| MACn | _____ | _____ | _____ |

6.2 The path into which a port is currently inserted in the IUT if hardware present.

| Ports | Primary | Secondary | Local |
|---|---|---|---|
| Port A | _____ | _____ | _____ |
| Port B | _____ | _____ | _____ |
| Port S | _____ | _____ | _____ |
| Port M1 | _____ | _____ | _____ |
| Port M2 | _____ | _____ | _____ |
| . | . | . | . |
| . | . | . | . |
| Port Mp | _____ | _____ | _____ |

7) Does IUT support Hold function? YES _____ NO _____

8) Does IUT have the capability of performing wrap_ab? YES _____ NO _____

9) Which connection types that IUT reject?

Reject A-A _____ Reject B-A _____
Reject A-B _____ Reject B-B _____
Reject A-S _____ Reject B-S _____
Reject A-M _____ Reject B-M _____

Reject S-A _____ Reject M-A _____
Reject S-B _____ Reject M-B _____
Reject S-S _____ Reject M-S _____
Reject S-M _____ Reject M-M _____

10) Indicate PMD type associated with a port:

| PMDClass | Port A | Port B | Port S | Port M1 | ... | Port Mp |
|---|---|---|---|---|---|---|
| multimode | _____ | _____ | _____ | _____ | ... | _____ |
| single-mode1 | _____ | _____ | _____ | _____ | ... | _____ |
| single-mode2 | _____ | _____ | _____ | _____ | ... | _____ |
| sonet | _____ | _____ | _____ | _____ | ... | _____ |
| low-cost-fiber | _____ | _____ | _____ | _____ | ... | _____ |
| twisted-pair | _____ | _____ | _____ | _____ | ... | _____ |
| unknown | _____ | _____ | _____ | _____ | ... | _____ |
| unspecified | _____ | _____ | _____ | _____ | ... | _____ |

11) Does IUT support bridging functions? YES ____ NO ____

If “yes”, mark the bridge function types that are present in the IUT.

Transparent Bridging Active (tb) _____
Source Routing Active (sr) _____
Source Routing Transparent Active (srt) _____



Copyright International Organization for Standardization
Provided by IHS under license with ISO
No reproduction or networking permitted without license from IHS Not for Resale

12) Does IUT support group address? YES ____ NO ____

12.1 If “yes”, enter 48-bit group addresses for IUT MACs in hexadecimal digits, most significant first:

MAC1: _____
MAC2: _____
. .
. .
MACn: _____

12.2 If “yes”, enter 16-bit group addresses for IUT MACs in hexadecimal digits, most significant first:

MAC1: _____
MAC2: _____
. .
. .
MACn: _____

13) Does IUT support priority function? YES ____ NO ____

If “yes”, enter T_Pri values.

13.1 T_Pri0 _____msec.
13.2 T_Pri1 _____msec.
13.3 T_Pri2 _____msec.
13.4 T_Pri3 _____msec.
13.5 T_Pri4 _____msec.
13.6 T_Pri5 _____msec.
13.7 T_Pri6 _____msec.

14) Does IUT support restricted dialog function? YES ____ NO ____

If “yes”, enter T_Rmode value.

T_Rmode _____msec.

15) Does IUT support MAC Local Loop function? YES ____ NO ____

If “yes”, enter T_Next(9) value.

T_Next(9) _____msec.



Copyright International Organization for Standardization
Provided by IHS under license with ISO
No reproduction or networking permitted without license from IHS Not for Resale