STD.ISO 9314-20-ENGL 2001 ■ 4851903 0874675 T03 ■

INTERNATIONAL STANDARD

ISO/IEC 9314-20

First edition
2001-03

Information technology – Fibre distributed data interface (FDDI) –

Part 20: Abstract test suite for FDDI physical medium dependent conformance testing (PMD ATS)



Reference number
ISO/IEC 9314-20:2001(E)

Copyright International Organization for Standardization
Provided by IHS under license with ISO
No reproduction or networking permitted without license from IHS
Not for Resale

STD.ISO 9314-20-ENGL 2001 ■ 4851903 0874676 94T ■

INTERNATIONAL STANDARD

ISO/IEC 9314-20

First edition
2001-03

Information technology – Fibre distributed data interface (FDDI) –

Part 20: Abstract test suite for FDDI physical medium dependent conformance testing (PMD ATS)

© ISO/IEC 2001

All rights reserved. Unless otherwise specified, no part of this publication may be reproduced or utilized in any form or by any means, electronic or mechanical, including photocopying and microfilm, without permission in writing from the publisher.

ISO/IEC Copyright Office • Case postale 56 • CH-1211 Genève 20 • Switzerland



PRICE CODE R

For price, see current catalogue

Copyright International Organization for Standardization
Provided by IHS under license with ISO
No reproduction or networking permitted without license from IHS

Not for Resale

STD.ISO 9314-20-ENGL 2001 ■ 4851903 0874677 886 ■

CONTENTS

Page

FOREWORD 3
INTRODUCTION 4
Clause
1 Scope 5
2 Normative references 5
3 Definitions 5
4 Conventions and abbreviations 6
5 Specification breakdown 6
6 General 7
7 Media attachment 8
8 Media signal interface 9
9 Interface signals 26

Annex A (normative) Test packet definition 28
Annex B (normative) Bit error rate test criteria 29
Annex C (informative) FDDI jitter budget and eye opening 38

Figure 1 – Optical power test configuration 9
Figure 2 – Pulse envelope test configuration 11
Figure 3 – Output waveform measurement 11
Figure 4 – Optical spectrum test configuration 13
Figure 5 – Source spectrum and rise/fall time 15
Figure 6 – Duty cycle distortion test 16
Figure 7 – Output jitter test configuration 18
Figure 8 – Active input test configuration 20
Figure 9 – Bypass switch attenuation test configuration 23
Figure 10 – Interchannel isolation test configuration 25
Figure 11 – Interruption time configuration 26
Figure 12 – Signal_Detect assertion 27
Figure B.1 – BER test at $2,5 \times 10^{-10}$: errors versus frames sent 36
Figure B.2 – BER test at 10^{-12}: errors versus frames sent 37

Table 1 – Specification breakdown 7
Table 2 – Active Input signal test conditions 20
Table B.1 – Pass criteria for bit error rate tests 31
Table B.2 – Fail criteria for bit error rate tests 34
Table C.1 – FDDI link jitter budget and eye opening 38

Copyright International Organization for Standardization
Provided by IHS under license with ISO
No reproduction or networking permitted without license from IHS Not for Resale

STD.ISO 9314-20-ENGL 2001 ■ 4851903 0874678 712 ■

INFORMATION TECHNOLOGY – FIBRE DISTRIBUTED DATA INTERFACE (FDDI) –

Part 20: Abstract test suite for FDDI physical medium dependent conformance testing (PMD ATS)

FOREWORD

1) ISO (International Organization for Standardization) and IEC (International Electrotechnical Commission) form the specialized system for worldwide standardization. National bodies that are members of ISO or IEC participate in the development of International Standards through technical committees established by the respective organization to deal with particular fields of technical activity. ISO and IEC technical committees collaborate in fields of mutual interest. Other international organizations, governmental and non-governmental, in liaison with ISO and IEC, also take part in the work.

2) In the field of information technology, ISO and IEC have established a joint technical committee, ISO/IEC JTC1. Draft International Standards adopted by the joint technical committee are circulated to national bodies for voting. Publication as an International Standard requires approval by at least 75 % of the national bodies casting a vote.

3) Attention is drawn to the possibility that some of the elements of this International Standard may be the subject of patent rights. ISO and IEC shall not be held responsible for identifying any or all such patent rights.

International Standard ISO/IEC 9314-20 was prepared by subcommittee 25: Interconnection of information technology equipment, of ISO/IEC joint technical committee 1: Information technology.

This publication has been drafted in accordance with the ISO/IEC Directives, Part 3.

Annexes A and B form an integral part of this standard.

Annex C is for information only.

This publication must be read in conjuntion with ISO/IEC 9314-3:1990.

ISO/IEC 9314 consists of the following parts, under the general title *Information technology – Fibre Distributed Data Interface (FDDI):*

- *Part 1: Token Ring Physical Layer Protocol (PHY)*
- *Part 2: Token Ring Media Access Control (MAC)*
- *Part 3: Physical Layer Medium Dependent (PMD)*
- *Part 4: Single Mode Fibre Physical Layer Medium Dependent (SMF-PMD)*
- *Part 5: Hybrid Ring Control (HRC)*
- *Part 6: Station Management (SMT)*
- *Part 7: Physical Layer Protocol (PHY-2)*
- *Part 8: Media Access Control-2 (MAC-2)*
- *Part 9: Information technology – Fibre Distributed Data Interface (FDDI) – Part 9: Low-cost fibre physical layer medium dependent*
- *Part 13: Conformance Test Protocol Implementation – Conformance Statement (CT-PICS) Proforma*
- *Part 21: Abstract Test Suite for FDDI – Physical Layer Protocol Conformance Testing (PHY-ATS)* [1)]
- *Part 25: Abstract test suite for FDDI – Station Management Conformance Testing (SMT-ATS)*
- *Part 26: Abstract Test Suite for FDDI – Media Access Control Conformance Testing (MAC-ATS)* [1)]

[1)] To be published.

Copyright International Organization for Standardization
Provided by IHS under license with ISO
No reproduction or networking permitted without license from IHS Not for Resale

INTRODUCTION

The Fibre Distributed Data Interface (FDDI), ISO/IEC 9314, is intended for use in a high performance general purpose multistation network and is designed for efficient operation with a peak data rate of 100 Mbit/s. It uses a Token Ring Architecture with optical fibre as the transmission medium. FDDI provides for hundreds of stations operating over an extent of tens of kilometres.

The FDDI Physical Media Dependent (PMD) standard, ISO/IEC 9314-3, specifies the lower sublayer of the Physical Layer for the FDDI, including the optical interface for multimode fibre FDDI stations. This part of ISO/IEC 9314 is an abstract test suite (ATS) conformance test for FDDI PMD. ISO/IEC 9314-3 specifies the optical interface of FDDI stations. ISO/IEC 9314-3 is not a protocol standard and this part of ISO/IEC 9314 requires the measurement of physical quantities such as optical power, wavelength and signal jitter. The intent of this part of ISO/IEC 9314 is to specify the tests as broadly as possible to allow measurement by various detailed test implementations. The ATS in this part of ISO/IEC 9314 differs from the methodology of higher level protocol conformance tests written using the Tree and Tabular Combined Notation (TTCN) because TTCN does not provide for Physical Layer testing, where there is no concept of a protocol data unit and where physical quantities must be measured.

Four other ISO/IEC standards provide a complete conformance test of an FDDI station:

a) An ATS for the FDDI Physical Layer Protocol (PHY) that provides a conformance test for FDDI PHY, ISO 9314-1. ISO 9314-1 specifies the upper sublayer of the Physical Layer for the FDDI, including the data encode/decode, framing and clocking, as well as the elasticity buffer, smoothing and repeat filter functions. FDDI PHY, however, does contain several state machines and implements a protocol at the level of FDDI code symbols. The only physical quantity that is measured in this conformance test is frequency. The PHY ATS cannot use the TTCN notation and a notation is developed in the PHY ATS for specifying test patterns and expected results in terms of FDDI code symbol strings.

b) An ATS for FDDI Media Access Control (MAC), ISO 9314-2, that provides a conformance test for FDDI MAC. ISO 9314-2 specifies the lower sublayer of the Data Link Layer for FDDI. It specifies access to the medium, including addressing, data checking and data framing. ISO 9314-2 also specifies the receiver and transmitter state machines. Since MAC is primarily with complete PDUs, the TTCN language is used to specify MAC protocol tests. Provisions of ISO/IEC 9314-2, however, require high resolution timing that may be difficult to achieve in commercial protocol testers.

c) An ATS for FDDI Station Management (SMT), ISO/IEC 9314-6, that provides a conformance test for FDDI SMT. ISO/IEC 9314-6 specifies the local portion of the system management application process for FDDI, including the control required for proper operation of an FDDI station in an FDDI ring. SMT provides services such as connection management, station insertion and removal, station initialization, configuration management and fault recovery, communications protocol for external authority, scheduling policies and the collection of statistics. SMT interacts with PMD, PHY and MAC. Therefore, an ATS for portions of SMT that use MAC PDUs can be specified in TTCN, while other portions require other approaches.

d) A Conformance Test Protocol Implementation Conformance Statement (PICS) Proforma, ISO/IEC 9314-13, for FDDI that provides a statement of the mandatory and optional requirements of each of the four FDDI base standards. The PICS proforma is used to identify requirements for conformance testing and to specify optional functionality requirements, particularly by workshops for functional standards and profiles.

Copyright International Organization for Standardization
Provided by IHS under license with ISO
No reproduction or networking permitted without license from IHS Not for Resale

INFORMATION TECHNOLOGY – FIBRE DISTRIBUTED DATA INTERFACE (FDDI) –

Part 20: Abstract test suite for FDDI physical medium dependent conformance testing (PMD ATS)

1 Scope

This part of ISO/IEC 9314 specifies a series of tests in order to verify conformance of FDDI stations to the requirements of ISO/IEC 9314-3:1990.

NOTE ISO/IEC 9314-3 specifies the requirements for the optical input/output port of FDDI stations as well as for cable plants. It states that a bit error rate for a station-to-station link should not exceed $2,5 \times 10^{-10}$ for conforming stations connected to each other through a conforming cable plant.

2 Normative references

The following normative documents contain provisions which, through reference in this text, constitute provisions of this part of ISO/IEC 9314. For dated references, subsequent amendments to, or revisions of, any of these publications do not apply. However, parties to agreements based on this part of ISO/IEC 9314 are encouraged to investigate the possibility of applying the most recent edition of the normative documents indicated below. For undated references, the latest edition of the normative document referred to applies. Members of IEC and ISO maintain registers of currently valid International Standards.

ISO 9314-1:1989, *Information processing systems – Fibre Distributed Data Interface (FDDI) – Part 1: Token Ring Physical Layer Protocol (PHY)*

ISO 9314-2:1989, *Information processing systems – Fibre Distributed Data Interface (FDDI) – Part 2: Token Ring Media Access Control (MAC)*

ISO/IEC 9314-3:1990, *Information processing systems – Fibre Distributed Data Interface (FDDI) – Part 3: Physical Layer Medium Dependent (PMD)*

ISO/IEC 9314-6:1998, *Information technology – Fibre Distributed Data Interface (FDDI) – Part 6: Token Ring Station Management (SMT)*

3 Definitions

The specialized FDDI terms used in this part of ISO/IEC 9314 are defined in the FDDI base standards ISO 9314-1 (PHY), ISO 9314-2 (MAC), ISO/IEC 9314-3 (PMD) and ISO/IEC 9314-6 (SMT).

Copyright International Organization for Standardization
Provided by IHS under license with ISO
No reproduction or networking permitted without license from IHS Not for Resale

4 Conventions and abbreviations

The following acronyms and abbreviations are used in this ATS:

BER: Bit Error Rate (PMD)
BERT: Bit Error Rate Tester (PMD)
CMS: Cladding Mode Stripper (ISO/IEC 60793-1)
DCD: Duty Cycle Distortion (PMD)
DDJ: Data Dependent Jitter (PMD)
FDDI: Fibre Distributed Data Interface
HLS: Halt Line State (PHY)
ILS: Idle Line State (PHY)
IUT: Implementation Under Test
MAC: Media Access Control
MIC: Media Interface Connector (PMD)
NA: Numerical Aperture (ISO/IEC 60793-1)
PCM: Physical Connection Management (SMT)
PHY: Physical Layer Protocol (PHY)
PMD: Physical Medium Dependent (PMD)
PTF/PTCP: Precision Test Fibre/Precision Test Connector Plug (PMD)
QLS: Quiet Line State (PHY)
RJ: Random Jitter (PMD)
SME: Source Monitoring Equipment (ISO/IEC 60793-1)
SMT: Station Management (SMT)
TTRT: Target Token Rotation Time (MAC).

The terms SMT, MAC, PHY and PMD, when used without modifiers, refer specifically to the local entities.

5 Specification breakdown

Table 1 summarizes the requirements of ISO/IEC 9314-3. It identifies those requirements that are tested in this test specification and the specific test suite where they are tested.

Copyright International Organization for Standardization
Provided by IHS under license with ISO
No reproduction or networking permitted without license from IHS
Not for Resale

Table 1 – Specification breakdown

Name	PICS Item No.	ISO/IEC 9314-3 reference	Test reference
Active output interface			
Center wavelength	PMD1.1	8.1.1 Table 1	8.2.4
Average power	PMD1.2	8.1.1 Table 1	8.2.1
Source FWHM spectral width	PMD1.3	8.1.1 Figure 9	8.2.4
Rise time	PMD1.4	8.1.1 Table 1	8.2.2
Fall time	PMD1.5	8.1.1 Table 1	8.2.2
Duty cycle distortion	PMD1.6	8.1.1 Table 1	8.2.5
Random jitter	PMD1.7	8.1.1 Table 1	8.2.6
Data dependent jitter	PMD1.8	8.1.1 Table 1	8.2.6
Extinction ratio	PMD1.9	8.1.1 Table 1	8.2.3
Pulse envelope		8.1.2 figures 10 and 11	8.2.2
Active Input interface			
Sensitivity threshold	PMD2.1	8.2.2 Table 2	8.3.4
BER $<10^{-12}$ at 2 dB above threshold		8.0	8.3.5
Saturation power level	PMD2.1	8.2.2 Table 2	8.3.6
Station bypass interface signal	–	–	–
Bypass attenuation	PMD3.1	8.3, Table 3 and Figure 12	8.4.1
Interchannel isolation	PMD3.2	8.3, Table 3 and Figure 12	8.4.2
Switching time	PMD3.2	8.3, Table 3 and Figure 12	Not testable
Media interruption time	PMD3.3	8.3, Table 3 and Figure 12	8.4.3
Interface signals			
Signal_Detect threshold	PMD4.1 & PMD4.2	9.1.1.1	9.2.1
Signal_Detect hysteresis	PMD4.3	9.1.1.1	9.2.1
MIC receptacle			
Receptacle keying	PMD6.1	7.2.2, Figure 8	7.2
Receptacle dimensions		7.2, Figure 5 and Figure 6	Not tested

6 General

6.1 Test environment

The FDDI standards do not specify an operating environment. All tests specified in this document shall be performed with temperature and atmospheric conditions consistent with the environmental operating specifications of the IUT.

For FDDI stations which are directly powered (either wholly or partly) from the a.c. power line, all tests shall be carried out within 0,5 % of the nominal operating voltage. If the equipment is powered by other means and those means are not supplied as a part of the apparatus (e.g. batteries, stabilized a.c. supplies, d.c.) all tests shall be carried out within the power supply limit declared by the supplier. If the power supply is a.c., the tests shall be conducted within 4 % of the normal operating frequency.

All optical power measurements shall be made with a calibrated power meter traceable to a recognized primary standard.

Copyright International Organization for Standardization
Provided by IHS under license with ISO
No reproduction or networking permitted without license from IHS Not for Resale

6.2 Measurement error

Physical quantities are measured in this ATS (particularly optical power levels). There are measurement errors associated with the calibration and tolerance of the measurement instruments. Moreover, it is known that measurements of optical output power are not necessarily precisely repeatable due to differences in the way connectors mate each time they are inserted. Where measurement repeatability is a concern, it is common in test standards to require a number of measurements and to add a safety factor of three times the standard deviation of those measurements to the mean. This ATS follows that convention.

Bit error rates (BER) are measured in this ATS. At the rates specified in PMD practical tests are statistical tests of the hypothesis that IUT meets the PMD requirements with a limited sample size. Associated with these tests is a confidence level. The confidence level chosen in this ATS is 90 %. Tests that establish this confidence level may have varying duration. However, the shorter the test, the larger the safety margin required of the IUT if it is to have a high probability of passing the test.

It is the burden of the conformance test laboratory to verify that an IUT does conform to the standard. Therefore, measurement errors due to calibration, repeatability and statistical sampling are added to the requirement being tested so that the greater the error, the more difficult it becomes to pass the conformance test.

7 Media attachment

7.1 MIC Requirements

An FDDI station is attached to the fibre optic medium by a Media Interface Connector (MIC). Clause 7 of ISO/IEC 9314-3:1990 specifies the dimensions of the MIC plug and the receptacle in the station. This clause defines tests of station MIC requirements.

7.2 Receptacle keying

7.2.1 Purpose

Every FDDI port is designated either A, B, S or M and Figure 8 of ISO/IEC 9314-3:1990 specifies the keying required for a receptacle for each type of port. This test case verifies the receptacle keying.

7.2.2 Equipment

FDDI connector plugs with keying for A, B, S and M ports.

7.2.3 Procedure

Attempt to insert the four plugs in each port of the IUT and record which plugs are successfully inserted.

7.2.4 Pass_fail criteria

Only the following plugs can be inserted:

a) A port: S or A plugs can be inserted;

b) B port: S or B plugs can be inserted;

c) M port: S or M plugs can be inserted;

d) S port; S plug can be inserted.

Copyright International Organization for Standardization
Provided by IHS under license with ISO
No reproduction or networking permitted without license from IHS Not for Resale

8 Media signal interface

8.1 Media signal test cases

The following test cases verify the requirements for the media signal interface specified in clause 8 of ISO/IEC 9314-3:1990.

8.2 Active output interface

The test cases in this group validate the requirements of 8.1 of ISO/IEC 9314-3:1990, which specifies the characteristics of the station output signal.

8.2.1 Average optical output power

8.2.1.1 Purpose

To verify that the average optical power coupled from the IUT into a PTF/PTCP is more than –20,0 dBm, and less than –14,0 dBm when a data pattern of Halt symbols is transmitted as specified in Table 1 of ISO/IEC 9314-3:1990.

8.2.1.2 Equipment

An optical power meter is used. The power meter shall be calibrated between –14 dBm and –31 dBm in the wavelength range 1 250 nm to 1 400 nm.

8.2.1.3 Configuration

See Figure 1.

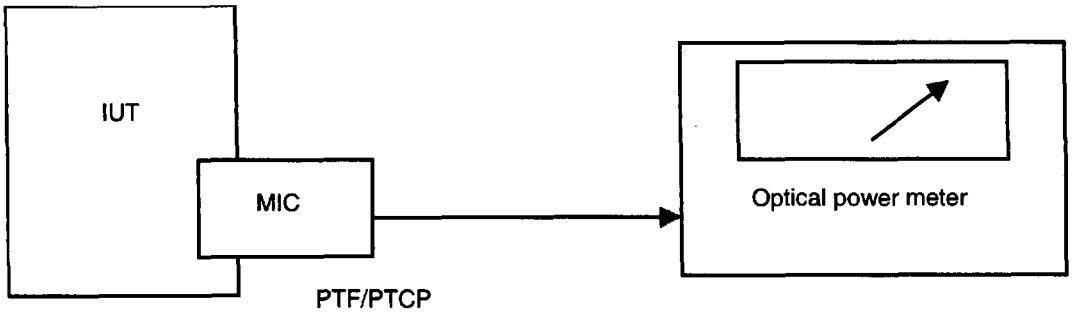

Figure 1 – Optical power test configuration

8.2.1.4 Procedure

The optical power meter is connected to the IUT using a PTF/PTCP. The IUT is turned on but its input is dark; this will result in the IUT entering the Physical Connection Management (PCM) Connect State and transmitting Halt Line State (HLS). The measurement shall be repeated ten times with the PTF/PTCP reinserted in the IUT between measurements. The connector plug shall be cleaned before each insertion. The PTF/PTCP shall not be manipulated manually to control the power measurement. Obvious outlying data points shall be excluded. The mean of the 10 measurements shall be computed with the sample standard deviation, *s*.

Copyright International Organization for Standardization
Provided by IHS under license with ISO
No reproduction or networking permitted without license from IHS Not for Resale

8.2.1.5 Pass_fail criteria

Let C be the calibration uncertainty of the power meter expressed in dB (for example, suppose, the uncertainty were 5 %, then C = 10 log (1,05) = 0,211 9). Let $\overline{P}$ be the mean of the power measurements. Let s be the sample standard deviation.

The IUT passes if

$$(20 + C + 3 \times s) \leq \overline{P} \leq (-14 - C - 3 \times s) \quad \text{dBm} \tag{1}$$

The IUT fails if

$$\overline{P} \geq (-14 + C + 3 \times s) \quad \text{dBm} \tag{2}$$

or

$$\overline{P} \leq -(20 + C + 3 \times s) \quad \text{dBm} \tag{3}$$

Otherwise the results are inconclusive.

8.2.2 Output waveform

8.2.2.1 Purpose

To verify that the output optical pulse rise time and fall time, conform to Table 1 of ISO/IEC 9314-3:1990, and the overshoot and undershoot are within the limit shown in figures 10 and 11 of ISO/IEC 9314-3:1990. The rise and fall times to be used in the spectral width test (test suite 4.1.3) are computed in this test.

8.2.2.2 Equipment

- Sampling oscilloscope or waveform analyzer
- Optical to electrical converter

The combined bandwidth range of the optical to electrical converter and the Waveform Recorder or Waveform Analyzer shall be greater than 100 kHz to 750 MHz.

A waveform analyzer is a device which samples the input waveform and automates the measurement and calculation of rise time, fall time, overshoot, and undershoot, of the signal, but does not necessarily record or display a complete trace of the waveform. To satisfy the requirements of this test the analyzer shall be capable of:

- detecting peak and minimum signal points;
- determining the high and low signal values of the pulse by averaging at least three values taken from the intervals shown in Figure 3;
- measuring the 10 % and 90 % signal level crossing points.

Copyright International Organization for Standardization
Provided by IHS under license with ISO
No reproduction or networking permitted without license from IHS Not for Resale

8.2.2.3 Configuration

See Figure 2.

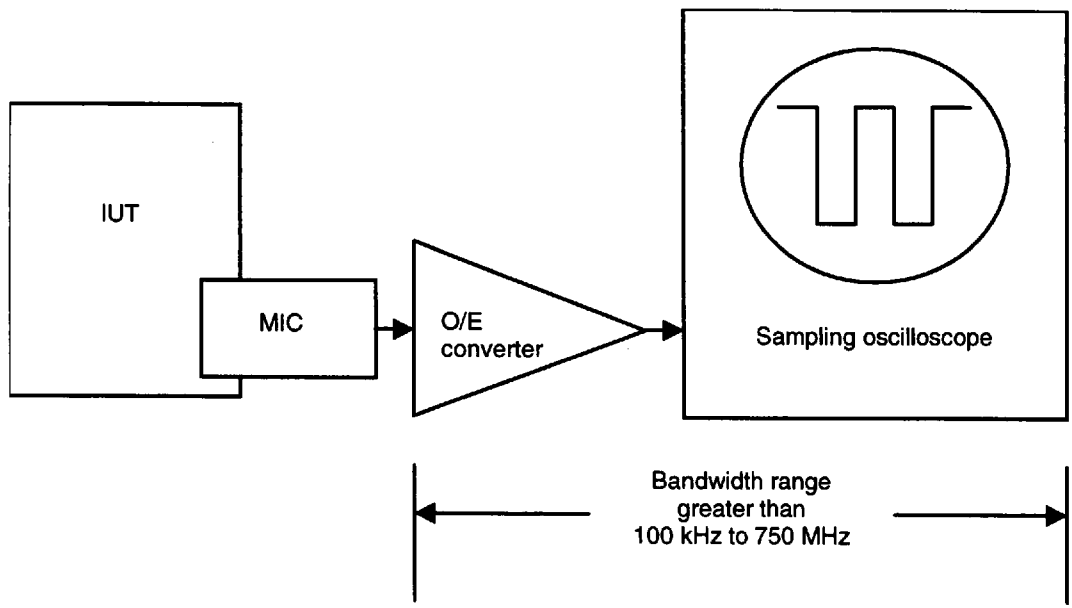

Figure 2 – Pulse envelope test configuration

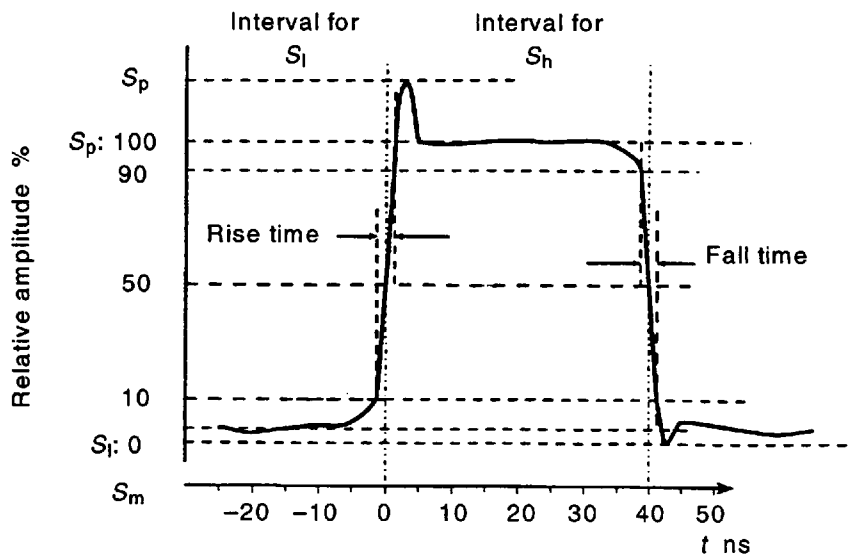

Figure 3 – Output waveform measurement

8.2.2.4 Procedure

With a dark input the IUT will transition to the PCM Connect State and send HLS. When an oscilloscope is used, the various power levels and times specific below are measured manually by the operator by visual inspection of the oscilloscope waveform display. When a waveform analyzer is used the parameters specified below are measured automatically by electronic circuits such as peak detectors and comparitors, or by programmed analysis of a sampled waveform.

Copyright International Organization for Standardization
Provided by IHS under license with ISO
No reproduction or networking permitted without license from IHS
Not for Resale

Refer to Figure 3. Measure the 0 % signal level, S_l, and 100 % signal levels, S_h, as the average level in the 10 ns intervals indicated in Figure 3.

Determine the 10 % signal level as follows:

$$10\ \%\ \text{level} = S_l + (S_h - S_l) \times 0{,}10 \tag{4}$$

Determine the 90 % signal level as follows:

$$90\ \%\ \text{level} = S_l + (S_h - S_l) \times 0{,}90 \tag{5}$$

Determine the rising and falling 10 % and 90 % signal points and the corresponding rise and fall times as illustrated in Figure 3.

Find the peak signal point, S_p. Compute the overshoot as follows:

$$\text{Overshoot} = \frac{S_p - S_h}{S_h - S_l} \times 100 \quad \% \tag{6}$$

Find the minimum power point, S_m, on the waveform trace. Compute the undershoot as follows:

$$\text{Undershoot} = \frac{S_t - S_m}{S_h - S_t} \times 100 \quad \% \tag{7}$$

8.2.2.5 Pass_fail criteria

a) The rise time shall be greater than 0,6 ns and less than 3,5 ns;

b) The fall time shall be greater than 0,6 ns and less than 3,5 ns;

c) Overshoot shall be less than 25 %;

d) Undershoot shall be less than 5 %.

8.2.3 Extinction ratio

8.2.3.1 Purpose

To verify that the extinction ratio conforms to PMD Table 1.

8.2.3.2 Equipment

Refer to 8.2.2.2. The test equipment for this clause is similar, except that the combined bandwidth range of the optical to electrical converter and the waveform recorder or waveform analyzer shall extend from d.c. to at least 75 MHz.

Copyright International Organization for Standardization
Provided by IHS under license with ISO
No reproduction or networking permitted without license from IHS Not for Resale

8.2.3.3 Configuration

See Figure 2.

8.2.3.4 Procedure

A dark input will cause the IUT to transition to the PCM Connect State and send HLS. Determine the 0 % signal level, S_l, and the 100 % signal level, S_h, as described in 8.2.2.4. Determine the DC reference baseline signal level (optical to electrical converter output with no light input), S_d.

Compute the extinction ratio as follows:

$$\text{Extinction ratio} = \frac{S_l - S_d}{S_h - S_d} \times 100 \quad \% \tag{8}$$

8.2.3.5 Pass_fail criteria

The extinction ratio shall be not more than 10 %.

8.2.4 Spectral characteristics

This test case uses the output rise/fall times recorded in test step 8.2.2.4 above.

8.2.4.1 Purpose

This test verifies that the optical centre wavelength and spectral width requirements stated in clause 8, Table 1 of ISO/IEC 9314-3:1990 and Figure 9 of ISO/IEC 9314-3:1990, respectively.

8.2.4.2 Equipment

An optical spectrum analyzer is required, as follows:

- the range shall be between 600 nm to 1 600 nm;
- the resolution shall be 0,1 nm;
- accuracy shall be 1 nm.

8.2.4.3 Configuration

See Figure 4.

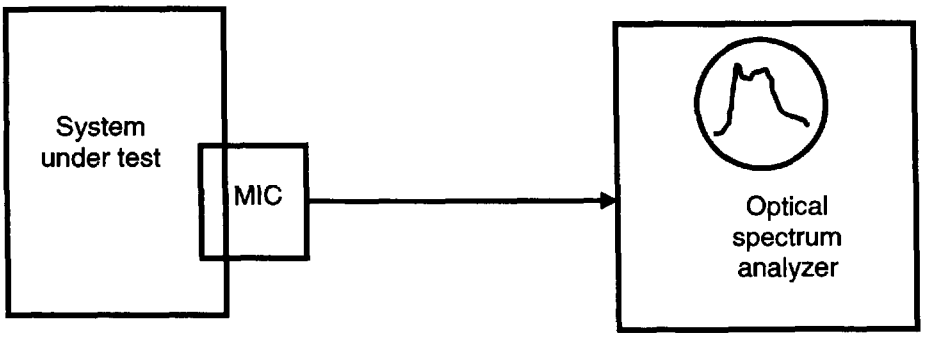

Figure 4 – Optical spectrum test configuration

Copyright International Organization for Standardization
Provided by IHS under license with ISO
No reproduction or networking permitted without license from IHS
Not for Resale

8.2.4.4 Procedure

This test uses the rise and fall times obtained in 8.2.2. Use the greater value, either rise or fall time, to plot the test point.

The spectrum analyzer is connected to the output of the IUT using a short fibre patch cable and a plot of the optical output spectrum obtained.

From the plot of the output spectrum determine *peak* power wavelength. Locate the two half power points farthest from the peak power wavelength. Let λ_c be the center wavelength, λ_l be the left half power wavelength and λ_r be the right half power wavelength. Then the center wavelength is given by the following expression:

$$\lambda_c = \frac{\lambda_r + \lambda_l}{2} \tag{9}$$

The full width, half maximum spectral width, FWHM, is given by:

$$\text{FWHM} = \lambda_r - \lambda_l \tag{10}$$

Using the greater value of rise or fall time, find the appropriate line in Figure 5. Find the point on that line corresponding to the source center wavelength. Project that point to the y axis to determine the maximum allowed spectral width for that rise/fall time and center wavelength.

8.2.4.5 Pass_fail criteria

a) The source centre wavelength shall be in the range 1 270 nm to 1 380 nm;

b) The spectral width shall not exceed the y axis value given in Figure 9 of ISO/IEC 9314-3: 1990 or 200 nm, whichever is less.

8.2.5 Duty cycle distortion

8.2.5.1 Purpose

To verify that the peak to peak Duty Cycle Distortion is in the range of 0,0 ns to 1,0 ns as specified in Table 1 of ISO/IEC 9314-3:1990.

Copyright International Organization for Standardization
Provided by IHS under license with ISO
No reproduction or networking permitted without license from IHS Not for Resale

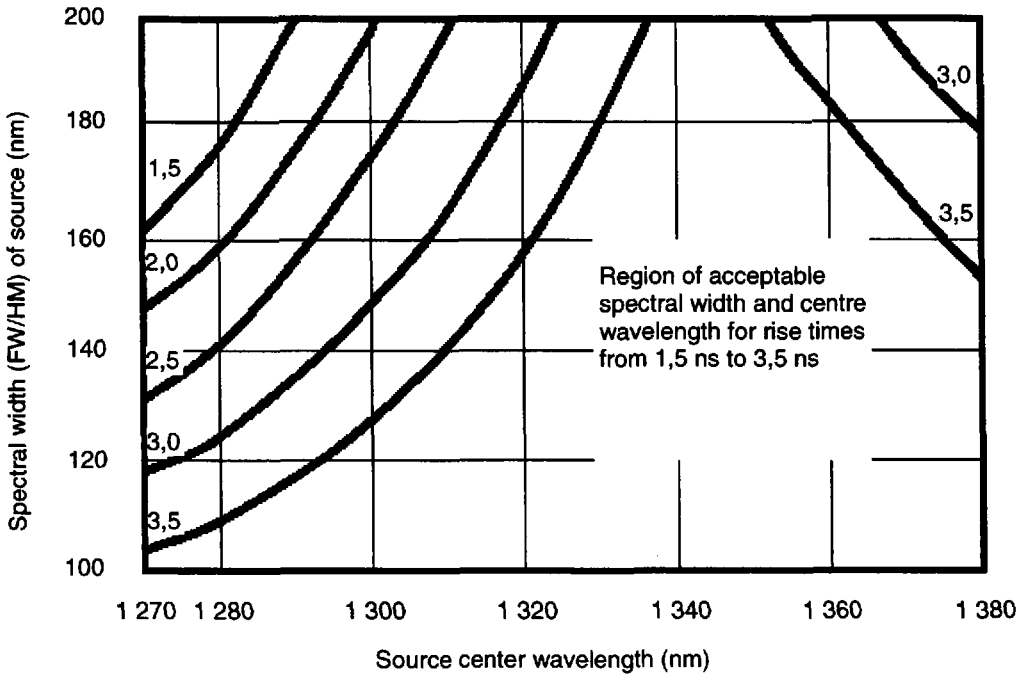

Figure 5 – Source spectrum and rise/fall time

8.2.5.2 Equipment

- Oscilloscope
- Optical to electrical converter
- FDDI station tester or a second FDDI station
- Optical signal splitter

The combined bandwidth range of the converter and the oscilloscope shall be greater than 100 kHz to 750 MHz.

8.2.5.3 Configuration

See Figure 6.

8.2.5.4 Procedure

This procedure requires observing the waveform of idle symbols transmitted by the IUT. An FDDI tester or another station may be used to induce the IUT to send ILS. If the IUT port is presented with continuous HLS it will transition to the PCM Next state and send ILS (that is transmit idle symbols).

The IUT may have some local means not specified in the FDDI standards to induce it to enter the PCM Maintenance state and send ILS for test purposes. If so this method may be used and an FDDI station tester is not required.

Copyright International Organization for Standardization
Provided by IHS under license with ISO
No reproduction or networking permitted without license from IHS
Not for Resale

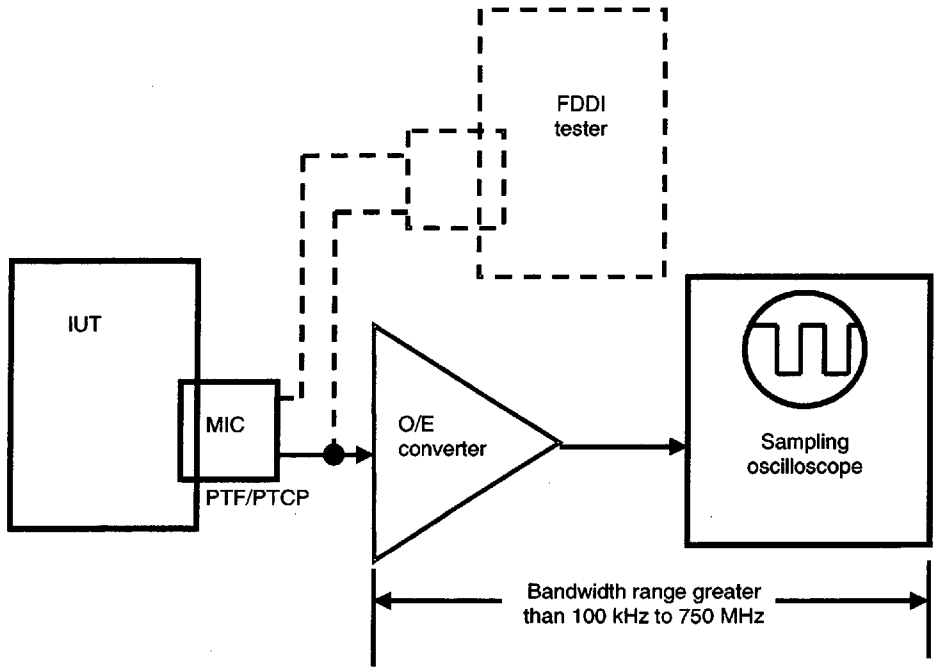

Figure 6 – Duty cycle distortion test

The method for inducing the IUT to transmit idle symbols is not specified in this test case. Using a recording oscilloscope or a photograph of the oscilloscope trace obtain the waveform trace of idle symbols output by the IUT. From this trace, measure the width of the high and low state levels of the waveform at the 50 % amplitude point. Let W_w be the duration of the wider state and W_n the duration of the narrower state. Calculate the *DCD* as follows:

$$DCD = \frac{W_w - W_n}{2} \quad (11)$$

8.2.5.5 Pass_fail criteria

DCD shall be less than 1,0 ns.

8.2.6 Output jitter and eye opening

While PMD specifies several separate jitter components, signal quality is measured in this test standard by measurement of the signal with two specified test patterns:

– a continuous stream of idle symbols;

– a series of frames containing the test pattern specified in annex A.

Copyright International Organization for Standardization
Provided by IHS under license with ISO
No reproduction or networking permitted without license from IHS Not for Resale

PMD requires that jitter be measured to a probability of $2,5 \times 10^{-10}$. At least three methods are used to measure jitter:

- visual observation of the signal "eye opening" on an oscilloscope. In general this method, while it gives a good general visual indication of signal quality, cannot be used to measure jitter at a precise probability. This part of ISO/IEC 9314 does not preclude the use of sampling or digital oscilloscopes that may have sufficient memory and capability to allow precise measurements of jitter to the specified probability. However, the use of oscilloscopes to measure jitter is not discussed further in this part of ISO/IEC 9314;
- direct measurement of jitter using a Time Interval Analyzer that determines the position of signal transitions relative to the clock and builds a histogram of signal transition points versus the clock strobe point. The jitter value where the probability exceeds $2,5 \times 10^{-10}$ can be determined from the histogram. Direct measurement of jitter at a probability of $2,5 \times 10^{-10}$ requires that a very large number of transition points be tabulated and may be beyond the capability of many instruments;
- measurement of eye openings using a Bit Error Rate Tester (BERT). The BERT method of measuring eye openings is described in A.4.2.2 of ISO/IEC 9314-3:1990. The eye opening is determined by the DCD, and two jitter components which are specified in Table 1 of ISO/IEC 9314-3:1990, Data Dependent Jitter (DDJ) and Random Jitter (RJ).

The procedure for measuring jitter with a BERT is described below. Other measuring procedures including oscilloscopes and time interval analyzers are acceptable provided they are capable of measuring jitter with a probability of $2,5 \times 10^{-10}$.

A BERT may be used to measure the "eye opening" of a signal, that is the central portion of a bit period where jitter does not confound the signal. Therefore the results are stated in terms of the width of the eye opening, which is the parameter directly measured by the BERT and the DDJ component. Annex B shows the correlation between jitter requirements in FDDI and the eye opening.

Provided the ILS eye opening (which measures the sum of DCD and RJ) is less than the limit, and the DCD (which is measured in 8.2.5) also meets the standard, then there is no practical need to compute RJ. Under these circumstances, even if RJ exceeds the limit in ISO/IEC 9314-3, there must be a corresponding reduction in DCD. With the jitter model assumed in PMD, the output RJ contribution to the link bit error rate is less significant than DCD, because output and receiver RJ terms are summed in r.m.s. fashion, and the receiver term always dominates. Annex C summarizes the FDDI jitter budget and is based on annex E of ISO/IEC 9314-3:1990. Annex C shows the conversion of jitter to an eye opening.

RJ + DCD is measured by measuring the eye-opening of a constant pattern of idle symbols, E_I. The test pattern eye opening, ED, which includes the eye closure due to RJ, DCD and DDJ is measured using a stream of packets containing the test pattern specified in annex A which has a spectrum that will produce DDJ.

8.2.6.1 Purpose

The purpose of this test is to verify that the peak to peak jitter of the output signal is as specified in ISO/IEC 9314-3, Table 1 and ISO/IEC 9314-3, A.3 (b).

Copyright International Organization for Standardization
Provided by IHS under license with ISO
No reproduction or networking permitted without license from IHS Not for Resale

8.2.6.2 Equipment

- Station Tester or another FDDI station
- Bit Error Rate Tester (BERT) or a Time Interval Analyzer
- Optical/electrical transducer
- 125 MHz clock recovery retiming circuit with random jitter less than 0,1 ns when used with the test packets defined in annex A
- Optical signal splitter

8.2.6.3 Configuration

See Figure 7.

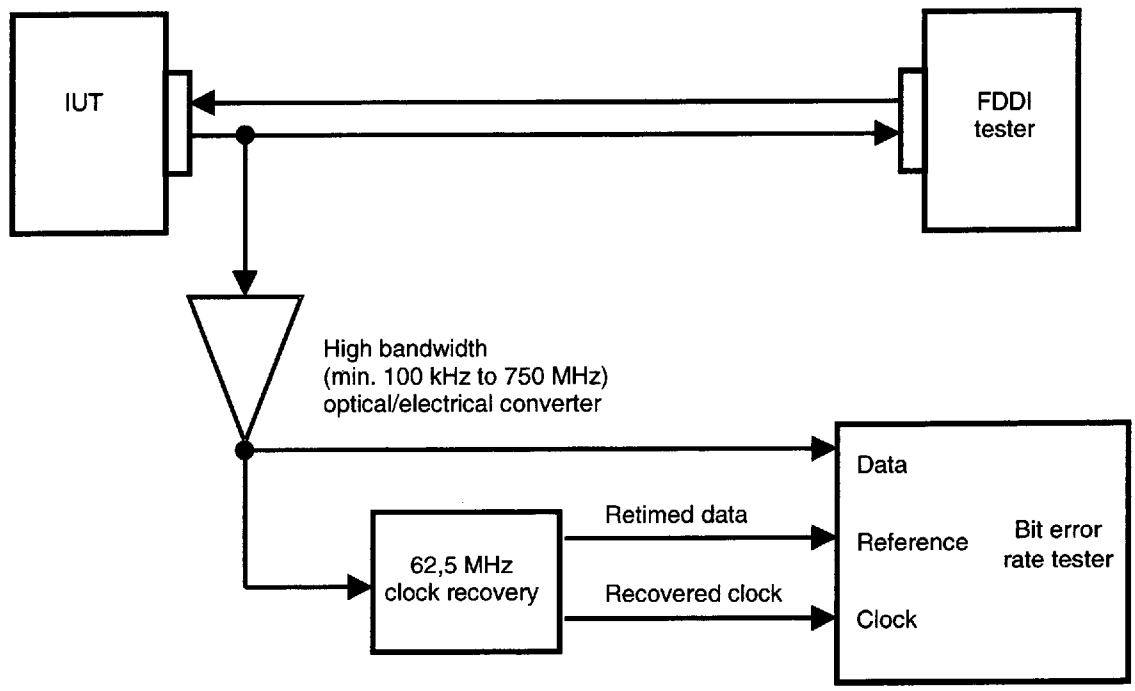

NOTE BERT is assumed to contain adjustable delay for eye opening measurement.

Figure 7 – Output jitter test configuration

8.2.6.4 Procedure

The IUT is induced to continuously output idle symbols for an extended period, that is, it sends ILS. This may be done by having the tester continuously send HLS to the IUT. This causes the IUT to transmit ILS with PCM in the Next State (see ISO/IEC 9314-6 (SMT) 9.6.1.2). It may be possible to induce the IUT PCM State machine to enter the Maintenance State and Send ILS (continuous idle symbols). The width of the eye opening is measured using the ILS output giving the ILS eye opening, E_I.

An active ring is then initialized using the tester and IUT. The tester holds the token and continuously transmits (following the normal FDDI token holding rules) the test packets defined in annex A, to the IUT which repeats them. The width of the eye opening is then measured while the IUT repeats the test packets. This yields the *DDJ* eye opening, E_D. Compute *DDJ* as follows:

$$DDJ = E_I - E_D \quad (12)$$

Copyright International Organization for Standardization
Provided by IHS under license with ISO
No reproduction or networking permitted without license from IHS Not for Resale

8.2.6.5 Pass_fail criteria

a) E_I shall be greater than 6,24 ns. This criterion is valid only if the IUT has passed test 8.2.5;

b) *DDJ* shall not exceed 0,6 ns.

8.3 Active input interface

The purpose of this subclause is to verify that the System Under Test (IUT) meets the specified sensitivity requirements at a Bit Error Rate (BER) of $2,5 \times 10^{-10}$ and has a BER of less than 10^{-12} when the input power is more than 2 dB above the specified threshold. In this test a representative "worst case" input signal is generated and packets containing a specified test pattern are used to test the receiver sensitivity. The representative worst case shall be a continuous string of the frames defined in annex A.

A single bit error in a packet can cause one of two effects in the IUT:

- the packet may be stripped;
- the FCS check may fail, causing the IUT to set the E indicator.

The measurements of interest are at BERs of $2,5 \times 10^{-10}$ or less. The test packets are 43 725 code bits in length. At this BER the probability that a packet contains one or more bit errors is $1,09 \times 10^{-5}$, and the probability that it contains two or more bit errors is $1,19 \times 10^{-10}$. Therefore, the possibility that a bad packet contains two or more errors is neglected and every stripped packet and packet with the E indicator set is attributed to a single bit error.

Input port bit error rate tests shall

- be based upon the ability of the IUT to repeat the test frames defined in annex A,
- consider any test frame stripped by the IUT to result from a single bit error,
- consider the setting of the E indicator by the IUT on any repeated test frame to be the result of a single bit error,
- consider the lost frames to have a Poisson distribution,
- for a verdict of "pass" use a test that establishes to a 90 % confidence level the hypothesis that BER is less than the specified rate is true.
- for a verdict of fail use a test that establishes to a 90 % confidence level the hypothesis that the BER is more than the specified rate is true.

Tests of varying length may be used to test the pass and fail hypotheses. Annex B includes a table of tests of different lengths that may be used to verify conformance to the 90 % confidence level. Test results may be inclusive, if neither the pass nor fail criterion is satisfied, and the shorter the test the greater the likelihood of an inconclusive test verdict. When a test is inconclusive a longer test may be used to resolve the verdict, however, if the actual bit error rate of the IUT is very close to the specification limit it may not be possible to reach a test verdict of either pass or fail in a practical test.

8.3.1 Equipment

- FDDI station tester
- Optical signal measurement system
- Optical signal control system

The tester is an FDDI station which is capable of repetitively transmitting the test packet defined in annex A and counting those valid test packets returned to it. The tester shall also be capable of identifying packets damaged on the link from the IUT to the tester, by examining the trailing indicators.

Copyright International Organization for Standardization
Provided by IHS under license with ISO
No reproduction or networking permitted without license from IHS Not for Resale

The optical signal control system shall be capable of producing near worst case Active Input signal conditions specified in Table 2, and of allowing the input power level to be adjusted.

8.3.2 General configuration

Figure 8 illustrates a generic test configuration which allows the generation and monitoring of the test input signal characteristics specified in Table 2, which represent near worst case signal quality conditions. The means for generating the near worst case signal conditions are not specified, but they may include selection of components and filtering.

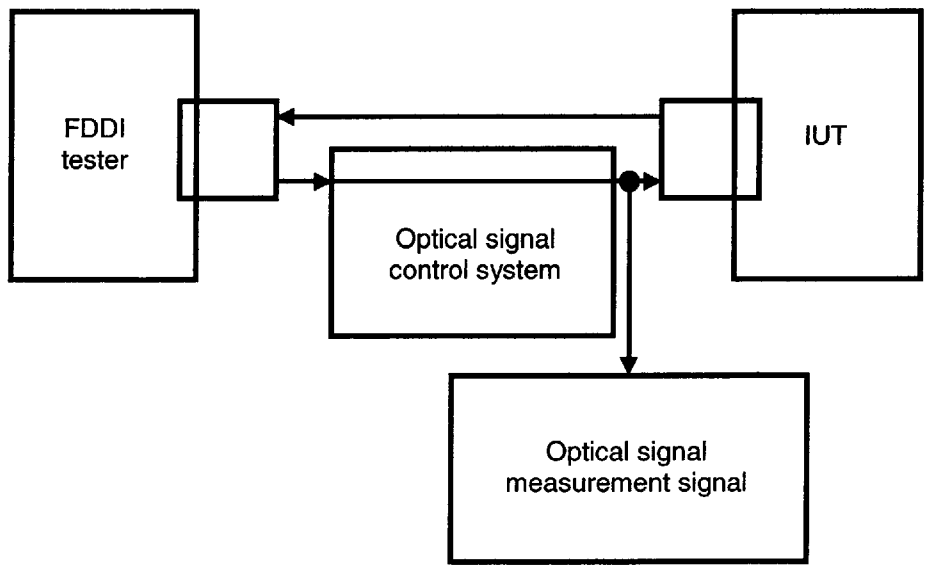

Figure 8 – Active input test configuration

The input port signal conditions given in Table 2 are common to the tests of input sensitivity. These legal (input) conditions are intended to stress the receiver. They are derived from the input port requirements of Table 2 of ISO/IEC 9314-3, with the jitter components combined to a single eye opening.

The IUT is coupled to the test signal via a PTF/PTCP.

8.3.3 General procedure

The test configuration is adjusted to produce an optical signal with the characteristics specified in Table 2. Three separate tests are run, with three separate input power levels. The receiver BER is measured for each case.

Table 2 – Active Input signal test conditions

Parameter	Minimum	Maximum	Units
Center wavelength	1 270	1 380	nm
Rise time (10 % to 90 %)	4,5	5,0	ns
Fall time (90 % to 10 %)	4,5	5,0	ns
Duty cycle distortion	0,8	1,0	ns
ILS eye opening	6,24	6,4	ns
Test pattern eye opening	5,04	5,2	ns

Copyright International Organization for Standardization
Provided by IHS under license with ISO
No reproduction or networking permitted without license from IHS
Not for Resale

To measure the receiver BER, a ring is formed with the IUT and the tester. TTRT should be set to its maximum value to permit the tester to transmit for long periods without releasing the token. The tester generates the number of test packets needed for the selected test (see annex B). The tester counts the number of valid test packets repeated by the IUT. During the course of the test the IUT may also generate packets (e.g., SIF Frames). Every test packet not received correctly by the tester is considered to represent one IUT bit error.

8.3.4 Sensitivity threshold

8.3.4.1 Purpose

To verify that the receiver input sensitivity threshold at the $2,5 \times 10^{-10}$ BER is –31,0 dBm as specified in Table 2 of ISO/IEC 9314-3:1990.

8.3.4.2 Configuration

See Figure 8 and 8.3.2.

8.3.4.3 Procedure

Let C be the calibration uncertainty of the power measurement. The mean input power, P_I, measured in ILS, shall not exceed $-(31 + C)$ dBm.

Refer to 8.3.3 for the measurement procedure. Input signal conditions shall be in the range specified in Table 2. The tester shall transmit test frames defined in annex A and count as error events those frames that are either stripped or have their E indicator set.

8.3.4.4 Pass_fail criteria

A verdict of pass shall be given when the number of error events indicate with a 90 % confidence that the BER is less than $2,5 \times 10^{-10}$. A test verdict of fail shall be given when the number of error events indicates with a 90 % confidence that the input BER exceeds $2,5 \times 10^{-10}$. Otherwise, the verdict shall be inconclusive. Annex B contains a table of tests that satisfy the 90 % confidence criterion.

8.3.5 BER 2 dB above threshold

8.3.5.1 Purpose

The purpose of this test is to verify that the receiver BER is less than 10^{-12} at power levels 2 dBm above the threshold as specified in the first paragraph of clause 8 of ISO/IEC 9314-3: 1990 and Table 2.

8.3.5.2 Configuration

See Figure 8.

8.3.5.3 Procedure

The procedure is described in 8.3.3. Let C be the calibration uncertainty of the power measurement.

The mean input power, P_I, shall not exceed $-(29 + C)$ dBm. Other input signal conditions shall be in the range specified in Table 2. The tester shall transmit test frames defined in annex A and count as error events those frames that are either stripped or have their E indicator set.

Copyright International Organization for Standardization
Provided by IHS under license with ISO
No reproduction or networking permitted without license from IHS Not for Resale

8.3.5.4 Pass_fail criteria

A verdict of pass shall be given when the number of error events indicate with a 90 % confidence that the BER is less than 10^{-12}.

A test verdict of fail shall be given when the number of error events indicate with a 90 % confidence that the input BER exceeds 10^{-12}. Otherwise, the verdict shall be inconclusive.

Annex B contains a table of tests that satisfy the 90 % confidence criterion.

8.3.6 Saturation

8.3.6.1 Purpose

This test verifies that the receiver BER is at least 10^{-12} at the saturation power level as specified in ISO/IEC 9314-3, Table 2.

8.3.6.2 Configuration

See Figure 8.

8.3.6.3 Procedure

Since saturation normally only occurs when an input is connected to an output through a short cable, the signal is not significantly degraded. The input signal for this test case shall be in the ranges specified in ISO/IEC 9314-3, Table 2 for the active output interface, except for the input power.

Let C be the calibration uncertainty of the power measurement. The mean input power shall be $-(14 + C)$ dBm.

At least 88 954 950 test packets shall be repeated without error. This allows at most one damaged packet and establishes to a 90 % confidence level that the BER is less than 10^{-12}.

8.3.6.4 Pass_fail criteria

A verdict of pass shall be given when the number of error events indicate with a 90 % confidence that the BER is less than 10^{-12}.

A test verdict of fail shall be given when the number of error events indicate with a 90 % confidence that the input BER exceeds 10^{-12}.

Otherwise, the verdict shall be inconclusive.

Annex B contains a table of tests that satisfy the 90 % confidence criterion.

8.4 Station bypass interface

A bypass switch may or may not be included in any dual attachment FDDI station. The following test cases apply if the bypass switch is included within the station.

8.4.1 Bypass attenuation

8.4.1.1 Purpose

To verify that the attenuation of the optical signal, when the station is being bypassed is less than 3 dB, as specified in 8.4 of ISO/IEC 9314-3.

Copyright International Organization for Standardization
Provided by IHS under license with ISO
No reproduction or networking permitted without license from IHS Not for Resale

8.4.1.2 Equipment

- Light source: A suitable 1 300 (nom.) light source shall be used, such as a LED. The light source output power shall be stable to ±1 % (0,05 dB) over the measurement period.
- Input fibre-plug assembly: This shall consist of 1 m of 62,5/125 mm fibre terminated in the output ferrule of an unkeyed precision MIC connector plug. The fibre shall be wrapped once in a 50 mm loop to form a mode stripper. The means of coupling the fibre-plug assembly to the light source is not specified.
- Connectorized output cable: This shall consist of a 1 m fibre cable terminated on either end with an unkeyed precision MIC connector plug.
- Optical power meter: The input to the power meter shall be by means of an FDDI MIC receptacle. The calibration of the power meter is not critical, however, the meter shall be linear to within 5 % over the power levels to be measured and shall be stable to ±1 % (0,05 dB) over the measurement period. The power meter is assumed to read in dBm.

8.4.1.3 Configuration

See Figure 9.

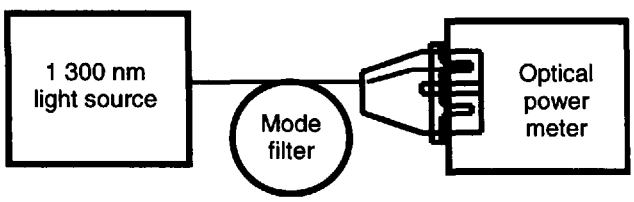

Figure 9a – Measurement of input power level, P_a

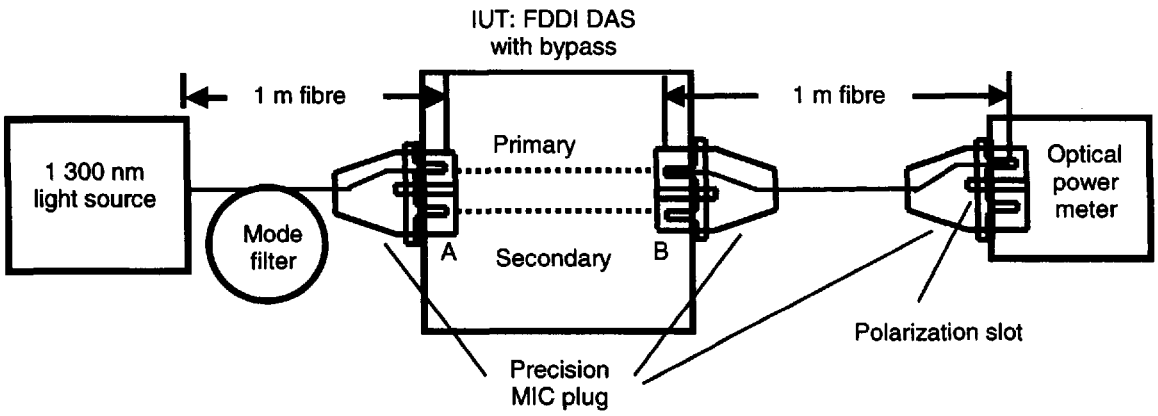

Figure 9b – Measurement of power through bypass, P_b

Figure 9 – Bypass switch attenuation test configuration

8.4.1.4 Procedure

Set the IUT in bypass mode. This normally may be accomplished by turning the IUT power off.

Connect the input fibre plug assembly to the power meter as illustrated in Figure 9a and record the input power level, P_a.

Copyright International Organization for Standardization
Provided by IHS under license with ISO
No reproduction or networking permitted without license from IHS
Not for Resale

Disconnect the input fibre-plug assembly from the optical power meter. Insert the input plug into the A port of the IUT and connect the output cable between the B port and the optical power meter as illustrated in Figure 9b. Record the power meter reading of the power, P_b, after the light has passed through the bypass. Compute the attenuation, L, in dB as follows:

$$L = P_a - P_b \quad (13)$$

Repeat the procedure ten times and compute the mean loss, L, and the standard deviation, s. Measure the attenuation in the other direction, connecting the B port to the light source and the A port to the power meter. Repeat this measurement ten times and compute L and s.

8.4.1.5 Pass_fail criteria

Both paths must pass.

A path passes if

$$\bar{L} + 3 \times s < 2{,}5 \text{ dB} \quad (14)$$

A path fails if

$$\bar{L} - 3 \times s > 2{,}5 \text{ dB} \quad (15)$$

Otherwise the test results are inconclusive.

8.4.2 Interchannel isolation

8.4.2.1 Purpose

This test verifies that the minimum interchannel isolation, is more than 40,0 dB as specified in ISO/IEC 9314-3, Table 3.

8.4.2.2 Equipment

- Light source: A suitable 1 300 nm (nominal) light source shall be used, such as an LED. The light source output power shall be stable to ±1 % (0,05 dB) over the measurement period.
- Fibre-plug assembly: This shall consist of two 1 m lengths of 62,5/125 µm fibre terminated in two precision MIC connector plugs as illustrated in Figure 10. The means of coupling the fibre-plug assembly to the light source is not specified.
- Optical power meter: The input to the power meter shall be by means of an FDDI MIC receptacle. The calibration of the power meter is not critical, however, the meter shall be linear to within 5 % over the power levels to be measured and shall be stable to ±1 % (0,05 dB) over the measurement period. The power meter is assumed to read in dBm.

8.4.2.3 Configuration

See Figure 10.

8.4.2.4 Procedure

The light source is connected to the power meter as illustrated in Figure 10a. Record the power level P_a.

Set the IUT in the bypass state. Cover the B port receptacle to prevent ambient light from entering. Connect the light source to the A port and the A port output to the power meter as shown in Figure 10b. Record the power meter reading, P_b. Repeat the measurement in the other direction connecting the light source to the B port and covering the A port.

Copyright International Organization for Standardization
Provided by IHS under license with ISO
No reproduction or networking permitted without license from IHS Not for Resale

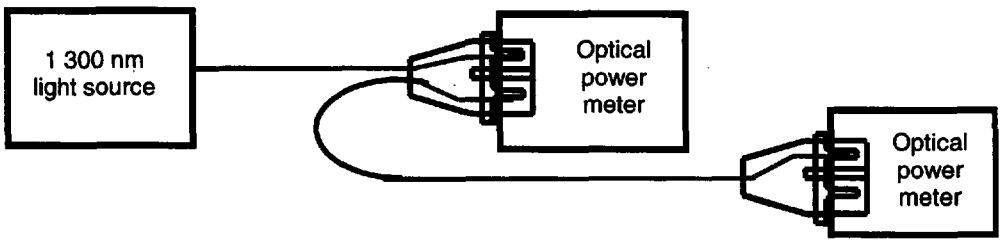

Figure 10a – Measurement of input power level, P_a

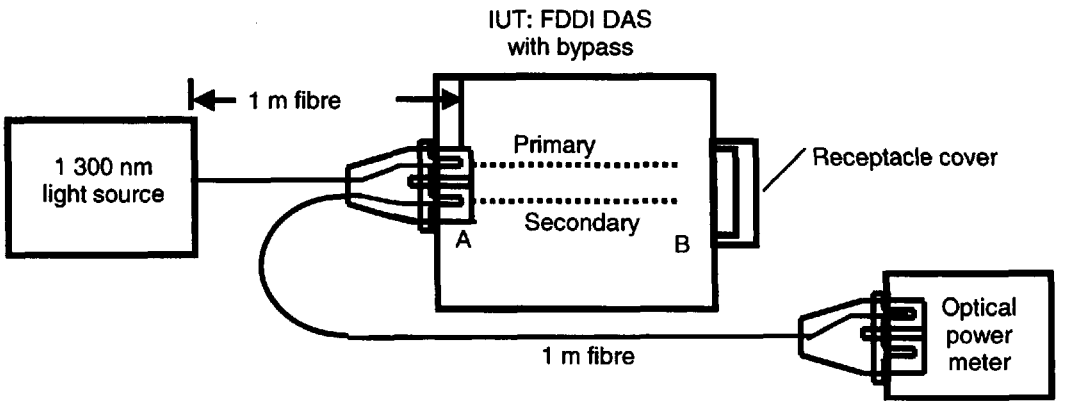

Figure 10b – Measurement of returned crosstalk, P_b

Figure 10 – Interchannel isolation test configuration

8.4.2.5 Pass_fail criteria

The IUT passes if P_a is at least 40 dB greater than P_b in both directions.

8.4.3 Media interruption time

8.4.3.1 Purpose

This test verifies that the media interruption time is less than 15,0 ms as specified in Table 3 of ISO/IEC 9314-3:1990.

8.4.3.2 Equipment

- Timing device: An apparatus for timing the duration of the signal interruption is required. This could include an optically activated timer or a suitably triggered recording oscilloscope. The device should be accurate to ±0,1 ms and be capable of timing an interval of 15 ms.
- Light source: An FDDI station is a suitable light source, however, any source capable of detection by the timing device is acceptable.

8.4.3.3 Configuration

See Figure 11.

Copyright International Organization for Standardization
Provided by IHS under license with ISO
No reproduction or networking permitted without license from IHS
Not for Resale

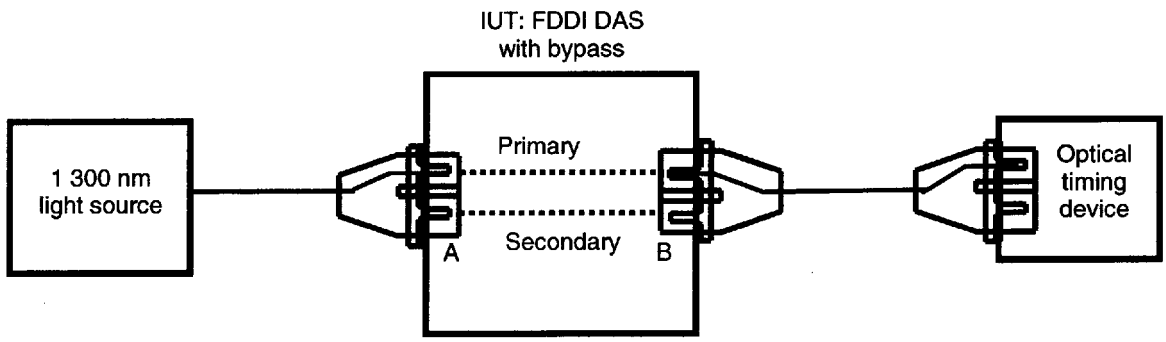

Figure 11 – Interruption time configuration

8.4.3.4 Procedure

The IUT is powered on. Since the B port input is dark the IUT will transmit HLS. Turn the IUT off, causing the station to change to the bypass state. Time the duration until light from the light source is passed through the station.

8.4.3.5 Pass_fail criteria

The duration of the optical signal interruption shall be less than 15 ms.

9 Interface signals

9.1 PMD/PHY signal requirements

Clause 9 of ISO/IEC 9314-3:1990 states several requirements for the signals between PMD and PHY or SMT that cannot be individually tested in this lower level point of control and observation test. However, the combined requirements of PMD, PHY and SMT are intended to result in certain observable behaviours of the station which may be tested. The tests specified in this clause are indirect tests of some of the requirements of clause 9 of ISO/IEC 9314-3.

9.2 Optical receiver

The optical receiver is required to assert and deassert Signal_Detect under various conditions. The effects of this may be indirectly observed, however it may not be practical to precisely measure some of the timing requirements in ISO/IEC 9314-3.

9.2.1 Signal_Detect threshold and hysteresis

9.2.1.1 Purpose

This test verifies that Signal_Detect is asserted at an input power level between –45 dBm and –31 dBm and that hysteresis is provided for Signal_Detect as specified in 9.1.1.2 of ISO/IEC 9314-3.

9.2.1.2 Equipment

- FDDI tester (need only be another FDDI station, or any device capable of sending HLS)
- Optical power meter
- Variable optical attenuator
- Optical splitter
- Line state monitoring device (an oscilloscope will suffice; however, if the FDDI tester provides an indication of the received line state it may function as the line state monitoring device)

Copyright International Organization for Standardization
Provided by IHS under license with ISO
No reproduction or networking permitted without license from IHS Not for Resale

9.2.1.3 Configuration

See Figure 12.

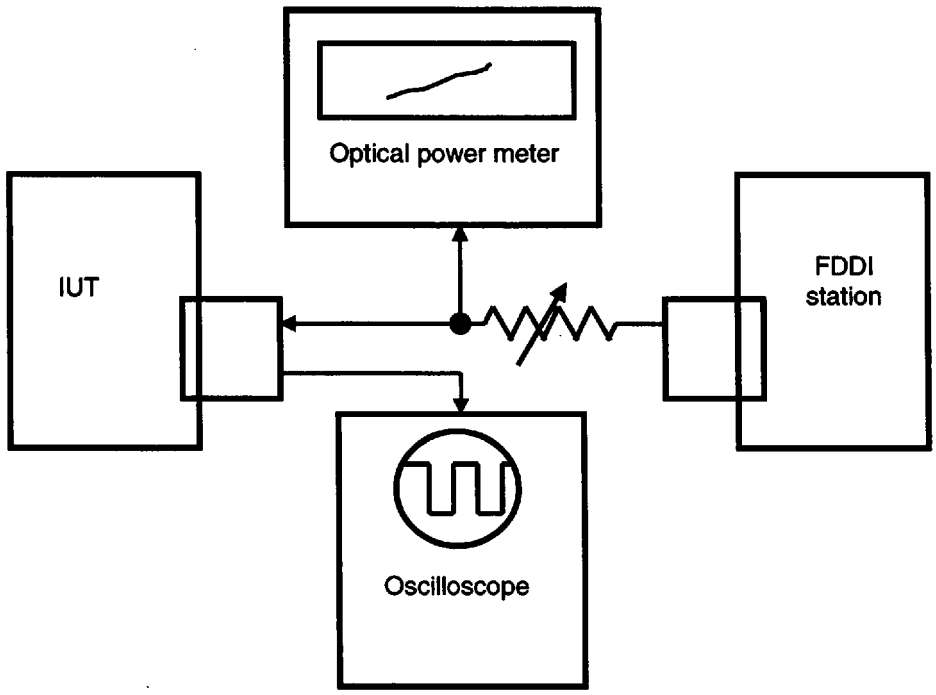

Figure 12 – Signal_Detect assertion

9.2.1.4 Procedure

An optical attenuator is placed in the path between the tester output and the IUT input and a splitter and power meter is used to monitor the IUT input power levels. The insertion loss of the splitter is measured on each path to allow determination of the actual power received by the IUT. The tester sends HLS. The attenuator is set so that the power level of the signal entering the IUT (measured from a stream of Halt symbols) is less than –45 dBm. At this point the IUT Physical Connection Management (PCM) (see ISO/IEC 9314-6:1998, 9.6) of the IUT should be in the Connect State causing the IUT to send HLS.

The attenuator is gradually adjusted to raise the IUT input power until at some input power level, P_a, the IUT will detect HLS and PCM will transition to the Next State, causing the IUT to send ILS and attempt to begin the connection initialization sequence defined in ISO/IEC 9314-6:1998, 9.6.1.1. Record P_a.

The attenuator is then adjusted to gradually decrease the power level received by the IUT. At some input power level, P_d, the IUT will transition to the PCM Break state and then to the PCM Connect state, causing the IUT to first send QLS and then HLS. Record P_d.

The hysteresis is computed as follows:

$$\text{Hysteresis} = P_a - P_d \qquad (16)$$

Pass_fail criteria

a) P_a shall be in the range –43,5 dBm to –31 dBm.

b) P_d shall be in the range –45 dBm to –29,5 dBm.

c) Hysteresis shall be at least 1,5 dB.

Copyright International Organization for Standardization
Provided by IHS under license with ISO
No reproduction or networking permitted without license from IHS Not for Resale

STD.ISO 9314-20-ENGL 2001 ■ 4851903 0874703 7T8 ■

Annex A
(normative)

Test packet definition

A.1 Packet definition

The information field of the test packet used when measuring station bit error rates shall consist of 34 repetitions of the following 256 symbol pattern:

- 1,8,1,9,3,E,5,9,6,E,C,A,D,7,0,D
- 5,E,6,9,C,A,0,2,4,2,4,7,0,3,B,F
- 1,8,1,9,3,E,5,9,6,E,C,A,D,7,0,D
- 7,0,7,0,7,0,2,4,2,4,2,2,4,2,7,0
- 4,7,0,2,7,4,D,3,1,8,B,F,8,E,3,9
- 5,E,6,9,C,A,0,2,4,2,4,7,0,3,B,F
- 1,8,1,9,5,E,5,9,6,E,C,E,D,7,0,D
- 4,D,D,2,7,4,D,3,1,8,B,F,8,E,3,9
- 5,E,6,9,C,A,0,2,4,2,4,7,0,3,B,F
- 1,8,1,9,6,E,5,9,6,E,C,E,3,9,5,1
- 1,8,1,9,3,E,5,9,6,E,C,A,D,7,0,D
- 5,E,6,9,C,A,0,2,4,2,4,7,0,3,B,F
- 1,8,1,9,3,E,5,9,6,E,C,A,D,7,0,D
- D,0,7,D,2,7,4,D,3,1,8,B,F,8,E,3
- 9,5,E,6,9,C,A,0,2,4,2,4,2,4,2,7
- 4,D,D,2,7,4,D,3,1,8,B,F,8,E,3,9

The length of this packet, counting 4 idle symbols preceding it, the Starting Delimiter, Frame Control, Destination Address, Source Address, the FCS and the Ending Delimiter, but not the Frame Status, is 8 745 symbols or 43 725 code bits.

Copyright International Organization for Standardization
Provided by IHS under license with ISO
No reproduction or networking permitted without license from IHS Not for Resale

Annex B
(normative)

Bit error rate test criteria

The criterion for passing any of the tests based on a bit error rate (BER) measurement is that the BER be estimated to be less than the specified threshold (either $2,5 \times 10^{-10}$ or 10^{-12}) with a confidence of at least 90 %. A count of frame errors is used to estimate the BER. Each frame error is considered to result from a single bit error.

Frame errors are assumed to be independent events. The probability p_k, of exactly k independent events during interval T, where m is the expected number of events in interval T, is the well known Poisson distribution:

$$P_{(k)} = e^{-\mu} \frac{\mu^k}{k!} \tag{17}$$

The probability, $P(n)$, that n or fewer events occur during the interval T, is given by the cumulative Poisson distribution:

$$P_{(n)} = \sum_{k=0}^{n} e^{-\mu} \frac{\mu^k}{k!} \tag{18}$$

For a given number of observed frame errors, n, we can numerically solve the problem for the expected errors, m, needed so that $P(n)$ is 10 %. That is, when the expected number of errors is exactly m, n or fewer errors will be observed 10 % of the time. If n or fewer frame errors occur in an interval where the expected number of frame errors is m, at the maximum allowed BER, then an inference is warranted, with a confidence of 90 %, that the actual BER is less than the specified maximum. This is the basis for the passing criteria tabulated in Table B.1.

Similarly, for a given number of observed frame errors, n, we can numerically solve the problem for the expected errors, m, needed so that $P(n)$ is 90 %. That is, when the expected number of errors is exactly m, n or more errors will be observed 10 % of the time. If n or more frame errors occur in an interval where the expected number of frame errors is m, at the maximum allowed BER, then an inference is warranted, with a confidence of 90 %, that the actual BER is more than the specified maximum. This is the basis for the failing criteria given in Table B.2.

The pass_fail criteria tabulated in this annex are based on this principle. In the tables and graphs that follow, the value of m that yields a $P(n)$ of 10 % and the value of m that yields $P(n)$ of 10 % has been found numerically for $n = 0, 1, 2, \ldots$ The number of test frames that correspond to the required values of k have also been computed.

The length, L, of each test frame is 43 730 code bits, counting 4 symbols of idles preceding the frame and the first trailing status indicator. If E is the bit error rate, then N, the number of frames per expected frame error is given by:

$$N = \frac{1}{L \times E} \tag{19}$$

At a BER of 10^{-12}, the number of test frames per expected error is 22 867 596,62. At a BER of $2,5 \times 10^{-10}$, the number of test frames per expected error is 91 470,39.

Copyright International Organization for Standardization
Provided by IHS under license with ISO
No reproduction or networking permitted without license from IHS Not for Resale

If we assume that the tester is capable of continuously transmitting test frames, and we neglect the time lost circulating tokens (the tester must release the token at least once every Target Token Rotation Time), and any time lost to the transmission of required periodic SMT frames, then the minimum possible test duration is 2 221 968 h per expected error at a BER of 10^{-12}. The minimum possible test duration is 0,533 272 4 min per expected error at the $2{,}5 \times 10^{-10}$ BER.

In Table B.1 the first column lists the number of observed errors. The second column lists the required value for the expected number of errors to warrant a 90 % confidence that the actual BER is less than the specified maximum and the IUT therefore passes the test. The fifth column tabulates the corresponding number of test packets at a BER of 10^{-12}, while the sixth column tabulates the corresponding number of test packets at a BER of $2{,}5 \times 10^{-10}$. The third column lists the minimum possible time for the 10^{-12} BER test while the fourth column lists the minimum possible time for the $2{,}5 \times 10^{-10}$ BER test.

In Table B.2 the first column also lists the number of observed errors. The second column, however, lists the required value for the expected number of errors to warrant a 90 % confidence that the actual BER is greater than the specified maximum and the IUT therefore fails the test. The fifth column tabulates the corresponding number of test packets at a BER of 10^{-12}, while the sixth column tabulates the corresponding number of test packets at a BER of $2{,}5 \times 10^{-10}$. The third column lists the minimum possible time for the 10^{-12} BER test while the fourth column lists the minimum possible test time for the $2{,}5 \times 10^{-10}$ BER test.

During the test, test frames are sent to the IUT and repeated by it Whenever the IUT does not successfully repeat a test frame, an error is recorded. The test may be terminated with a verdict of pass whenever the number of test frames actually transmitted is greater than the number corresponding to the pass criteria in Table B.1 for the number of frame errors observed. For example, if the number of frame errors observed is 2, and the number of test frames transmitted by the tester is greater than $1{,}22 \times 10^{8}$, then the IUT passes at a BER of 10^{-12}.

Similarly, the test may be terminated with a verdict of "fail" whenever the number of test frames actually transmitted is fewer than the number corresponding to the fail criteria in Table B.2 for the number of frame errors observed. For example, if the number of frame errors observed is 2, and the number of test frames transmitted is fewer than $2{,}52 \times 10^{7}$, then the IUT fails.

If the actual BER of the IUT is very close to the specified limit, then it may not be possible to reach a verdict of either pass or fail, in a test of practical duration, and the test result is inconclusive. The minimum duration of the test before assigning a verdict of inconclusive is a matter for negotiation between the test laboratory and the vendor of the IUT.

Figure B.1 illustrates the three regions (pass, fail and inconclusive) for a specified BER of $2{,}5 \times 10^{-10}$.

Figure B.2 illustrates the three regions for a BER of 10^{-12}.

In each test, an IUT with exactly the BER required by the standard will pass the test 10 % of the time, fail the test approximately 10 % of the time, and produce inconclusive results about 80 % of the time.

If an IUT is to have a high confidence of passing the test, a margin is required in the implementation. As the tests become longer, the margin needed becomes less. There is a direct trade-off between the length of the conformance test needed to verify conformance to the standard, and the margin needed by the IUT to ensure a high probability of passing the test. Conformance can be established for implementations with large margins in a relatively short time, but implementations with small margins may require a much longer test to establish conformance.

Copyright International Organization for Standardization
Provided by IHS under license with ISO
No reproduction or networking permitted without license from IHS Not for Resale

Note that the theory of optical receivers predicts that a receiver with a BER of $2,5 \times 10^{-10}$ at the specified threshold of –31 dBm, should have a BER of less than 10^{-15} over the range where the requirement is of PMD is 10^{-12}. Therefore, if the design of the IUT does not induce a noise floor, an implementation that passes the $2,5 \times 10^{-10}$ BER sensitivity test should have a large margin at the 10^{-12} BER level.

Table B.1 – Pass criteria for bit error rate tests

Observed errors (pass)	Expected errors	Minimum test hours to pass at 1×10^{-12}	Minimum test min to pass at $2,5 \times 10^{-10}$	Minimum frames sent to pass at 1×10^{-12}	Minimum frames sent to pass at $2,5 \times 10^{-10}$
0	2,30	5,11	1,23	$5,26 \times 10^{7}$	$2,10 \times 10^{5}$
1	3,89	8,64	2,07	$8,90 \times 10^{7}$	$3,56 \times 10^{5}$
2	5,32	11,82	2,84	$1,22 \times 10^{8}$	$4,87 \times 10^{5}$
3	6,68	14,84	3,56	$1,53 \times 10^{8}$	$6,11 \times 10^{5}$
4	7,99	17,75	4,26	$1,83 \times 10^{8}$	$7,31 \times 10^{5}$
5	9,27	20,60	4,94	$2,12 \times 10^{8}$	$8,48 \times 10^{5}$
6	10,53	23,40	5,62	$2,41 \times 10^{8}$	$9,63 \times 10^{5}$
7	11,77	26,15	6,28	$2,69 \times 10^{8}$	$1,08 \times 10^{6}$
8	12,99	28,86	6,93	$2,97 \times 10^{8}$	$1,19 \times 10^{6}$
9	14,21	31,57	7,58	$3,25 \times 10^{8}$	$1,30 \times 10^{6}$
10	15,41	34,24	8,22	$3,52 \times 10^{8}$	$1,41 \times 10^{6}$
11	16,60	36,88	8,85	$3,80 \times 10^{8}$	$1,52 \times 10^{6}$
12	17,78	39,51	9,48	$4,07 \times 10^{8}$	$1,63 \times 10^{6}$
13	18,96	42,13	10,11	$4,34 \times 10^{8}$	$1,73 \times 10^{6}$
14	20,13	44,73	10,73	$4,60 \times 10^{8}$	$1,84 \times 10^{6}$
15	21,29	47,31	11,35	$4,87 \times 10^{8}$	$1,95 \times 10^{6}$
16	22,45	49,88	11,97	$5,13 \times 10^{8}$	$2,05 \times 10^{6}$
17	23,61	52,46	12,59	$5,40 \times 10^{8}$	$2,16 \times 10^{6}$
18	24,76	55,02	13,20	$5,66 \times 10^{8}$	$2,26 \times 10^{6}$
19	25,90	57,55	13,81	$5,92 \times 10^{8}$	$2,37 \times 10^{6}$
20	27,05	60,10	14,43	$6,19 \times 10^{8}$	$2,47 \times 10^{6}$
21	28,18	62,62	15,03	$6,44 \times 10^{8}$	$2,58 \times 10^{6}$
22	29,32	65,15	15,64	$6,70 \times 10^{8}$	$2,68 \times 10^{6}$
23	30,45	67,66	16,24	$6,96 \times 10^{8}$	$2,79 \times 10^{6}$
24	31,58	70,17	16,84	$7,22 \times 10^{8}$	$2,89 \times 10^{6}$
25	32,71	72,68	17,44	$7,48 \times 10^{8}$	$2,99 \times 10^{6}$
26	33,84	75,19	18,05	$7,74 \times 10^{8}$	$3,10 \times 10^{6}$
27	34,96	77,68	18,64	$7,99 \times 10^{8}$	$3,20 \times 10^{6}$
28	36,08	80,17	19,24	$8,25 \times 10^{8}$	$3,30 \times 10^{6}$
29	37,20	82,66	19,84	$8,51 \times 10^{8}$	$3,40 \times 10^{6}$
30	38,32	85,15	20,43	$8,76 \times 10^{8}$	$3,51 \times 10^{6}$
31	39,43	87,61	21,03	$9,02 \times 10^{8}$	$3,61 \times 10^{6}$
32	40,54	90,08	21,62	$9,27 \times 10^{8}$	$3,71 \times 10^{6}$
33	41,65	92,54	22,21	$9,52 \times 10^{8}$	$3,81 \times 10^{6}$
34	42,76	95,01	22,80	$9,78 \times 10^{8}$	$3,91 \times 10^{6}$
35	43,87	97,48	23,39	$1,00 \times 10^{9}$	$4,01 \times 10^{6}$
36	44,98	99,94	23,99	$1,03 \times 10^{9}$	$4,11 \times 10^{6}$

Copyright International Organization for Standardization
Provided by IHS under license with ISO
No reproduction or networking permitted without license from IHS
Not for Resale

Table B.1 (*continued*)

Observed errors (pass)	Expected errors	Minimum test hours to pass at 1×10^{-12}	Minimum test min to pass at $2{,}5 \times 10^{-10}$	Minimum frames sent to pass at 1×10^{-12}	Minimum frames sent to pass at $2{,}5 \times 10^{-10}$
37	46,08	102,39	24,57	$1{,}05 \times 10^{9}$	$4{,}21 \times 10^{6}$
38	47,19	104,85	25,17	$1{,}08 \times 10^{9}$	$4{,}32 \times 10^{6}$
39	48,29	107,30	25,75	$1{,}10 \times 10^{9}$	$4{,}42 \times 10^{6}$
40	49,39	109,74	26,34	$1{,}13 \times 10^{9}$	$4{,}52 \times 10^{6}$
41	50,49	112,19	26,92	$1{,}15 \times 10^{9}$	$4{,}62 \times 10^{6}$
42	51,59	114,63	27,51	$1{,}18 \times 10^{9}$	$4{,}72 \times 10^{6}$
43	52,69	117,08	28,10	$1{,}20 \times 10^{9}$	$4{,}82 \times 10^{6}$
44	53,78	119,50	28,68	$1{,}23 \times 10^{9}$	$4{,}92 \times 10^{6}$
45	54,88	121,94	29,27	$1{,}25 \times 10^{9}$	$5{,}02 \times 10^{6}$
46	55,97	124,36	29,85	$1{,}28 \times 10^{9}$	$5{,}12 \times 10^{6}$
47	57,07	126,81	30,43	$1{,}31 \times 10^{9}$	$5{,}22 \times 10^{6}$
48	58,16	129,23	31,02	$1{,}33 \times 10^{9}$	$5{,}32 \times 10^{6}$
49	59,25	131,65	31,60	$1{,}35 \times 10^{9}$	$5{,}42 \times 10^{6}$
50	60,34	134,07	32,18	$1{,}38 \times 10^{9}$	$5{,}52 \times 10^{6}$
51	61,43	136,50	32,76	$1{,}40 \times 10^{9}$	$5{,}62 \times 10^{6}$
52	62,52	138,92	33,34	$1{,}43 \times 10^{9}$	$5{,}72 \times 10^{6}$
53	63,61	141,34	33,92	$1{,}45 \times 10^{9}$	$5{,}82 \times 10^{6}$
54	64,69	143,74	34,50	$1{,}48 \times 10^{9}$	$5{,}92 \times 10^{6}$
55	65,78	146,16	35,08	$1{,}50 \times 10^{9}$	$6{,}02 \times 10^{6}$
56	66,86	148,56	35,65	$1{,}53 \times 10^{9}$	$6{,}12 \times 10^{6}$
57	67,95	150,98	36,24	$1{,}55 \times 10^{9}$	$6{,}22 \times 10^{6}$
58	69,03	153,38	36,81	$1{,}58 \times 10^{9}$	$6{,}31 \times 10^{6}$
59	70,12	155,80	37,39	$1{,}60 \times 10^{9}$	$6{,}41 \times 10^{6}$
60	71,20	158,20	37,97	$1{,}63 \times 10^{9}$	$6{,}51 \times 10^{6}$
61	72,28	160,60	38,54	$1{,}65 \times 10^{9}$	$6{,}61 \times 10^{6}$
62	73,36	163,00	39,12	$1{,}68 \times 10^{9}$	$6{,}71 \times 10^{6}$
63	74,44	165,40	39,70	$1{,}70 \times 10^{9}$	$6{,}81 \times 10^{6}$
64	75,52	167,80	40,27	$1{,}73 \times 10^{9}$	$6{,}91 \times 10^{6}$
65	76,60	170,20	40,85	$1{,}75 \times 10^{9}$	$7{,}01 \times 10^{6}$
66	77,68	172,60	41,42	$1{,}78 \times 10^{9}$	$7{,}11 \times 10^{6}$
67	78,76	175,00	42,00	$1{,}80 \times 10^{9}$	$7{,}20 \times 10^{6}$
68	79,84	177,40	42,58	$1{,}83 \times 10^{9}$	$7{,}30 \times 10^{6}$
69	80,91	179,78	43,15	$1{,}85 \times 10^{9}$	$7{,}40 \times 10^{6}$
70	81,99	182,18	43,72	$1{,}87 \times 10^{9}$	$7{,}50 \times 10^{6}$
71	83,07	184,58	44,30	$1{,}90 \times 10^{9}$	$7{,}60 \times 10^{6}$
72	84,14	186,96	44,87	$1{,}92 \times 10^{9}$	$7{,}70 \times 10^{6}$
73	85,22	189,36	45,45	$1{,}95 \times 10^{9}$	$7{,}80 \times 10^{6}$
74	86,29	191,73	46,02	$1{,}97 \times 10^{9}$	$7{,}89 \times 10^{6}$
75	87,36	194,11	46,59	$2{,}00 \times 10^{9}$	$7{,}99 \times 10^{6}$
76	88,44	196,51	47,16	$2{,}02 \times 10^{9}$	$8{,}09 \times 10^{6}$
77	89,51	198,89	47,73	$2{,}05 \times 10^{9}$	$8{,}19 \times 10^{6}$
78	90,58	201,27	48,30	$2{,}07 \times 10^{9}$	$8{,}29 \times 10^{6}$

Copyright International Organization for Standardization
Provided by IHS under license with ISO
No reproduction or networking permitted without license from IHS Not for Resale

Table B.1 (*continued*)

Observed errors (pass)	Expected errors	Minimum test hours to pass at 1×10^{-12}	Minimum test min to pass at $2,5 \times 10^{-10}$	Minimum frames sent to pass at 1×10^{-12}	Minimum frames sent to pass at $2,5 \times 10^{-10}$
79	91,66	203,67	48,88	$2,10 \times 10^{9}$	$8,38 \times 10^{6}$
80	92,73	206,04	49,45	$2,12 \times 10^{9}$	$8,48 \times 10^{6}$
81	93,80	208,42	50,02	$2,14 \times 10^{9}$	$8,58 \times 10^{6}$
82	94,87	210,80	50,59	$2,17 \times 10^{9}$	$8,68 \times 10^{6}$
83	95,94	213,18	51,16	$2,19 \times 10^{9}$	$8,78 \times 10^{6}$
84	97,01	215,55	51,73	$2,22 \times 10^{9}$	$8,87 \times 10^{6}$
85	98,08	217,93	52,30	$2,24 \times 10^{9}$	$8,97 \times 10^{6}$
86	99,15	220,31	52,87	$2,27 \times 10^{9}$	$9,07 \times 10^{6}$
87	100,22	222,69	53,44	$2,29 \times 10^{9}$	$9,17 \times 10^{6}$
88	101,28	225,04	54,01	$2,32 \times 10^{9}$	$9,26 \times 10^{6}$
89	102,35	227,42	54,58	$2,34 \times 10^{9}$	$9,36 \times 10^{6}$
90	103,42	229,80	55,15	$2,36 \times 10^{9}$	$9,46 \times 10^{6}$
91	104,49	232,17	55,72	$2,39 \times 10^{9}$	$9,56 \times 10^{6}$
92	105,55	234,53	56,29	$2,41 \times 10^{9}$	$9,65 \times 10^{6}$
93	106,62	236,91	56,86	$2,44 \times 10^{9}$	$9,75 \times 10^{6}$
94	107,69	239,28	57,43	$2,46 \times 10^{9}$	$9,85 \times 10^{6}$
95	108,75	241,64	57,99	$2,49 \times 10^{9}$	$9,95 \times 10^{6}$
96	109,82	244,02	58,56	$2,51 \times 10^{9}$	$1,00 \times 10^{7}$
97	110,88	246,37	59,13	$2,54 \times 10^{9}$	$1,01 \times 10^{7}$
98	111,95	248,75	59,70	$2,56 \times 10^{9}$	$1,02 \times 10^{7}$
99	113,01	251,10	60,27	$2,58 \times 10^{9}$	$1,03 \times 10^{7}$
100	114,07	253,46	60,83	$2,61 \times 10^{9}$	$1,04 \times 10^{7}$

Copyright International Organization for Standardization
Provided by IHS under license with ISO
No reproduction or networking permitted without license from IHS Not for Resale

Table B.2 – Fail criteria for bit error rate tests

Observed errors (fail)	Expected errors	Minimum test hours to fail at 1×10^{-12}	Minimum test min to fail at $2{,}5 \times 10^{-10}$	Minimum frames sent to fail at 1×10^{-12}	Minimum frames sent to fail at $2{,}5 \times 10^{-10}$
0					
1	0,53	1,178	0,283	$1{,}21 \times 10^{7}$	$4{,}85 \times 10^{4}$
2	1,10	2,444	0,587	$2{,}52 \times 10^{7}$	$1{,}01 \times 10^{5}$
3	1,74	3,866	0,928	$3{,}98 \times 10^{7}$	$1{,}59 \times 10^{5}$
4	2,43	5,399	1,296	$5{,}56 \times 10^{7}$	$2{,}22 \times 10^{5}$
5	3,15	6,999	1,680	$7{,}20 \times 10^{7}$	$2{,}88 \times 10^{5}$
6	3,89	8,643	2,074	$8{,}90 \times 10^{7}$	$3{,}56 \times 10^{5}$
7	4,66	10,354	2,485	$1{,}07 \times 10^{8}$	$4{,}26 \times 10^{5}$
8	5,43	12,065	2,896	$1{,}24 \times 10^{8}$	$4{,}97 \times 10^{5}$
9	6,22	13,821	3,317	$1{,}42 \times 10^{8}$	$5{,}69 \times 10^{5}$
10	7,02	15,598	3,744	$1{,}61 \times 10^{8}$	$6{,}42 \times 10^{5}$
11	7,83	17,398	4,176	$1{,}79 \times 10^{8}$	$7{,}16 \times 10^{5}$
12	8,65	19,220	4,613	$1{,}98 \times 10^{8}$	$7{,}91 \times 10^{5}$
13	9,47	21,042	5,050	$2{,}17 \times 10^{8}$	$8{,}66 \times 10^{5}$
14	10,30	22,886	5,493	$2{,}36 \times 10^{8}$	$9{,}42 \times 10^{5}$
15	11,14	24,753	5,941	$2{,}55 \times 10^{8}$	$1{,}02 \times 10^{6}$
16	11,98	26,619	6,389	$2{,}74 \times 10^{8}$	$1{,}10 \times 10^{6}$
17	12,82	28,486	6,837	$2{,}93 \times 10^{8}$	$1{,}17 \times 10^{6}$
18	13,67	30,374	7,290	$3{,}13 \times 10^{8}$	$1{,}25 \times 10^{6}$
19	14,53	32,285	7,748	$3{,}32 \times 10^{8}$	$1{,}33 \times 10^{6}$
20	15,38	34,174	8,202	$3{,}52 \times 10^{8}$	$1{,}41 \times 10^{6}$
21	16,24	36,085	8,660	$3{,}71 \times 10^{8}$	$1{,}49 \times 10^{6}$
22	17,11	38,018	9,124	$3{,}91 \times 10^{8}$	$1{,}57 \times 10^{6}$
23	17,97	39,929	9,583	$4{,}11 \times 10^{8}$	$1{,}64 \times 10^{6}$
24	18,84	41,862	10,047	$4{,}31 \times 10^{8}$	$1{,}72 \times 10^{6}$
25	19,72	43,817	10,516	$4{,}51 \times 10^{8}$	$1{,}80 \times 10^{6}$
26	20,59	45,750	10,980	$4{,}71 \times 10^{8}$	$1{,}88 \times 10^{6}$
27	21,47	47,706	11,449	$4{,}91 \times 10^{8}$	$1{,}96 \times 10^{6}$
28	22,35	49,661	11,919	$5{,}11 \times 10^{8}$	$2{,}04 \times 10^{6}$
29	23,23	51,616	12,388	$5{,}31 \times 10^{8}$	$2{,}12 \times 10^{6}$
30	24,11	53,572	12,857	$5{,}51 \times 10^{8}$	$2{,}21 \times 10^{6}$
31	25,00	55,549	13,332	$5{,}72 \times 10^{8}$	$2{,}29 \times 10^{6}$
32	25,89	57,527	13,806	$5{,}92 \times 10^{8}$	$2{,}37 \times 10^{6}$
33	26,77	59,482	14,276	$6{,}12 \times 10^{8}$	$2{,}45 \times 10^{6}$
34	27,66	61,460	14,750	$6{,}33 \times 10^{8}$	$2{,}53 \times 10^{6}$
35	28,56	63,459	15,230	$6{,}53 \times 10^{8}$	$2{,}61 \times 10^{6}$
36	29,45	65,437	15,705	$6{,}73 \times 10^{8}$	$2{,}69 \times 10^{6}$
37	30,34	67,415	16,180	$6{,}94 \times 10^{8}$	$2{,}78 \times 10^{6}$
38	31,24	69,414	16,659	$7{,}14 \times 10^{8}$	$2{,}86 \times 10^{6}$
39	32,14	71,414	17,139	$7{,}35 \times 10^{8}$	$2{,}94 \times 10^{6}$
40	33,04	73,414	17,619	$7{,}56 \times 10^{8}$	$3{,}02 \times 10^{6}$
41	33,94	75,414	18,099	$7{,}76 \times 10^{8}$	$3{,}10 \times 10^{6}$

Copyright International Organization for Standardization
Provided by IHS under license with ISO
No reproduction or networking permitted without license from IHS

Not for Resale

Table B.2 (*continued*)

Observed errors (fail)	Expected errors	Minimum test hours to fail at 1×10^{-12}	Minimum test min to fail at $2{,}5 \times 10^{-10}$	Minimum frames sent to fail at 1×10^{-12}	Minimum frames sent to fail at $2{,}5 \times 10^{-10}$
42	34,84	77,413	18,579	$7{,}97 \times 10^{8}$	$3{,}19 \times 10^{6}$
43	35,74	79,413	19,059	$8{,}17 \times 10^{8}$	$3{,}27 \times 10^{6}$
44	36,65	81,435	19,544	$8{,}38 \times 10^{8}$	$3{,}35 \times 10^{6}$
45	37,55	83,435	20,024	$8{,}59 \times 10^{8}$	$3{,}43 \times 10^{6}$
46	38,46	85,457	20,510	$8{,}79 \times 10^{8}$	$3{,}52 \times 10^{6}$
47	39,36	87,457	20,990	$9{,}00 \times 10^{8}$	$3{,}60 \times 10^{6}$
48	40,27	89,479	21,475	$9{,}21 \times 10^{8}$	$3{,}68 \times 10^{6}$
49	41,18	91,501	21,960	$9{,}42 \times 10^{8}$	$3{,}77 \times 10^{6}$
50	42,09	93,523	22,445	$9{,}62 \times 10^{8}$	$3{,}85 \times 10^{6}$
51	43,00	95,545	22,931	$9{,}83 \times 10^{8}$	$3{,}93 \times 10^{6}$
52	43,91	97,567	23,416	$1{,}00 \times 10^{9}$	$4{,}02 \times 10^{6}$
53	44,82	99,589	23,901	$1{,}02 \times 10^{9}$	$4{,}10 \times 10^{6}$
54	45,74	101,633	24,392	$1{,}05 \times 10^{9}$	$4{,}18 \times 10^{6}$
55	46,65	103,655	24,877	$1{,}07 \times 10^{9}$	$4{,}27 \times 10^{6}$
56	47,56	105,677	25,362	$1{,}09 \times 10^{9}$	$4{,}35 \times 10^{6}$
57	48,48	107,721	25,853	$1{,}11 \times 10^{9}$	$4{,}43 \times 10^{6}$
58	49,40	109,765	26,344	$1{,}13 \times 10^{9}$	$4{,}52 \times 10^{6}$
59	50,31	111,787	26,830	$1{,}15 \times 10^{9}$	$4{,}60 \times 10^{6}$
60	51,23	113,831	27,320	$1{,}17 \times 10^{9}$	$4{,}69 \times 10^{6}$
61	52,15	115,876	27,810	$1{,}19 \times 10^{9}$	$4{,}77 \times 10^{6}$
62	53,07	117,920	28,301	$1{,}21 \times 10^{9}$	$4{,}85 \times 10^{6}$
63	53,99	119,964	28,791	$1{,}23 \times 10^{9}$	$4{,}94 \times 10^{6}$
64	54,91	122,008	29,282	$1{,}26 \times 10^{9}$	$5{,}02 \times 10^{6}$
65	55,83	124,053	29,773	$1{,}28 \times 10^{9}$	$5{,}11 \times 10^{6}$
66	56,75	126,097	30,263	$1{,}30 \times 10^{9}$	$5{,}19 \times 10^{6}$
67	57,67	128,141	30,754	$1{,}32 \times 10^{9}$	$5{,}28 \times 10^{6}$
68	58,59	130,185	31,244	$1{,}34 \times 10^{9}$	$5{,}36 \times 10^{6}$
69	59,51	132,229	31,735	$1{,}36 \times 10^{9}$	$5{,}44 \times 10^{6}$
70	60,44	134,296	32,231	$1{,}38 \times 10^{9}$	$5{,}53 \times 10^{6}$
71	61,36	136,340	32,722	$1{,}40 \times 10^{9}$	$5{,}61 \times 10^{6}$
72	62,29	138,406	33,218	$1{,}42 \times 10^{9}$	$5{,}70 \times 10^{6}$
73	63,21	140,451	33,708	$1{,}45 \times 10^{9}$	$5{,}78 \times 10^{6}$
74	64,14	142,517	34,204	$1{,}47 \times 10^{9}$	$5{,}87 \times 10^{6}$
75	65,06	144,561	34,695	$1{,}49 \times 10^{9}$	$5{,}95 \times 10^{6}$
76	65,99	146,627	35,191	$1{,}51 \times 10^{9}$	$6{,}04 \times 10^{6}$
77	66,92	148,694	35,687	$1{,}53 \times 10^{9}$	$6{,}12 \times 10^{6}$
78	67,84	150,738	36,177	$1{,}55 \times 10^{9}$	$6{,}21 \times 10^{6}$
79	68,77	152,804	36,673	$1{,}57 \times 10^{9}$	$6{,}29 \times 10^{6}$
80	69,70	154,871	37,169	$1{,}59 \times 10^{9}$	$6{,}38 \times 10^{6}$
81	70,63	156,937	37,665	$1{,}62 \times 10^{9}$	$6{,}46 \times 10^{6}$
82	71,56	159,004	38,161	$1{,}64 \times 10^{9}$	$6{,}55 \times 10^{6}$
83	72,49	161,070	38,657	$1{,}66 \times 10^{9}$	$6{,}63 \times 10^{6}$

Copyright International Organization for Standardization
Provided by IHS under license with ISO
No reproduction or networking permitted without license from IHS

Not for Resale

Table B.2 (*continued*)

Observed errors (fail)	Expected errors	Minimum test hours to fail at 1×10^{-12}	Minimum test min to fail at $2,5 \times 10^{-10}$	Minimum frames sent to fail at 1×10^{-12}	Minimum frames sent to fail at $2,5 \times 10^{-10}$
84	73,42	163,136	39,153	$1,68 \times 10^9$	$6,72 \times 10^6$
85	74,35	165,203	39,649	$1,70 \times 10^9$	$6,80 \times 10^6$
86	75,28	167,269	40,145	$1,72 \times 10^9$	$6,89 \times 10^6$
87	76,21	169,336	40,641	$1,74 \times 10^9$	$6,97 \times 10^6$
88	77,14	171,402	41,137	$1,76 \times 10^9$	$7,06 \times 10^6$
89	78,08	173,491	41,638	$1,79 \times 10^9$	$7,14 \times 10^6$
90	79,01	175,557	42,134	$1,81 \times 10^9$	$7,23 \times 10^6$
91	79,94	177,624	42,630	$1,83 \times 10^9$	$7,31 \times 10^6$
92	80,88	179,712	43,131	$1,85 \times 10^9$	$7,40 \times 10^6$
93	81,81	181,779	43,627	$1,87 \times 10^9$	$7,48 \times 10^6$
94	82,74	183,845	44,123	$1,89 \times 10^9$	$7,57 \times 10^6$
95	83,68	185,934	44,624	$1,91 \times 10^9$	$7,65 \times 10^6$
96	84,61	188,000	45,120	$1,93 \times 10^9$	$7,74 \times 10^6$
97	85,55	190,089	45,622	$1,96 \times 10^9$	$7,83 \times 10^6$
98	86,48	192,155	46,117	$1,98 \times 10^9$	$7,91 \times 10^6$
99	87,42	194,244	46,619	$2,00 \times 10^9$	$8,00 \times 10^6$
100	88,35	196,310	47,12	$2,02 \times 10^9$	$8,08 \times 10^6$

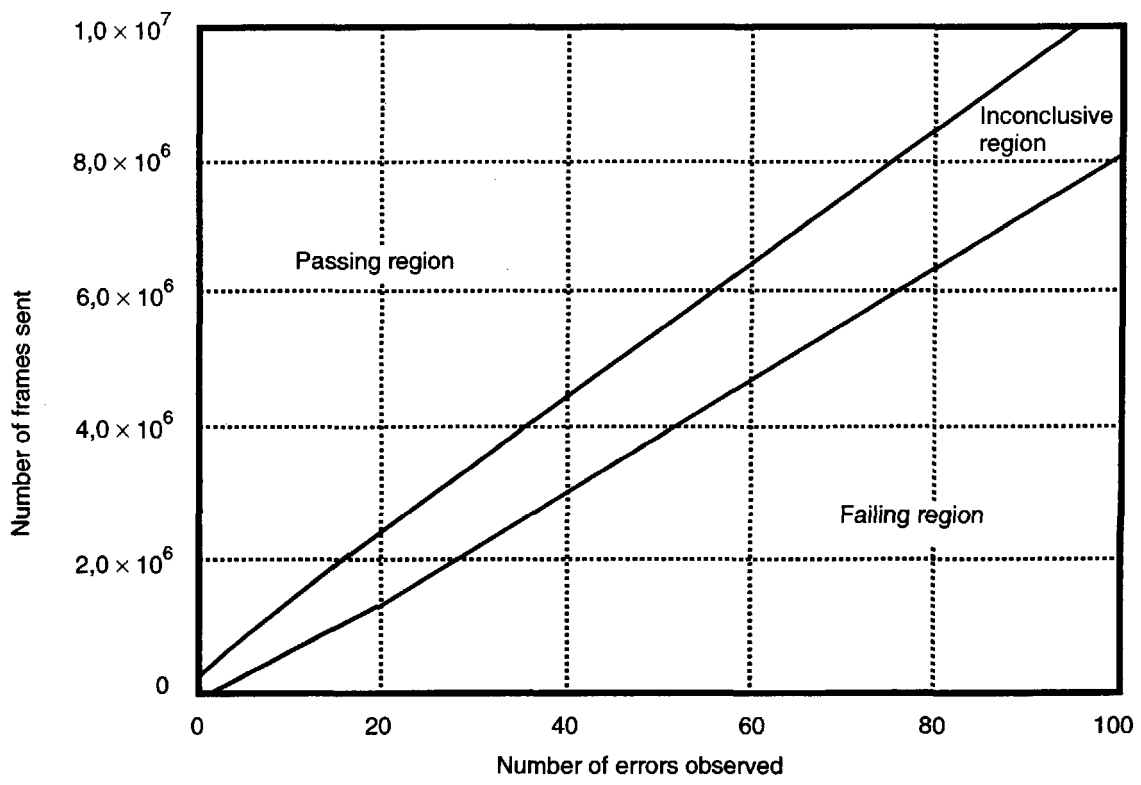

Figure B.1 – BER test at $2,5 \times 10^{-10}$: errors versus frames sent

Copyright International Organization for Standardization
Provided by IHS under license with ISO
No reproduction or networking permitted without license from IHS
Not for Resale

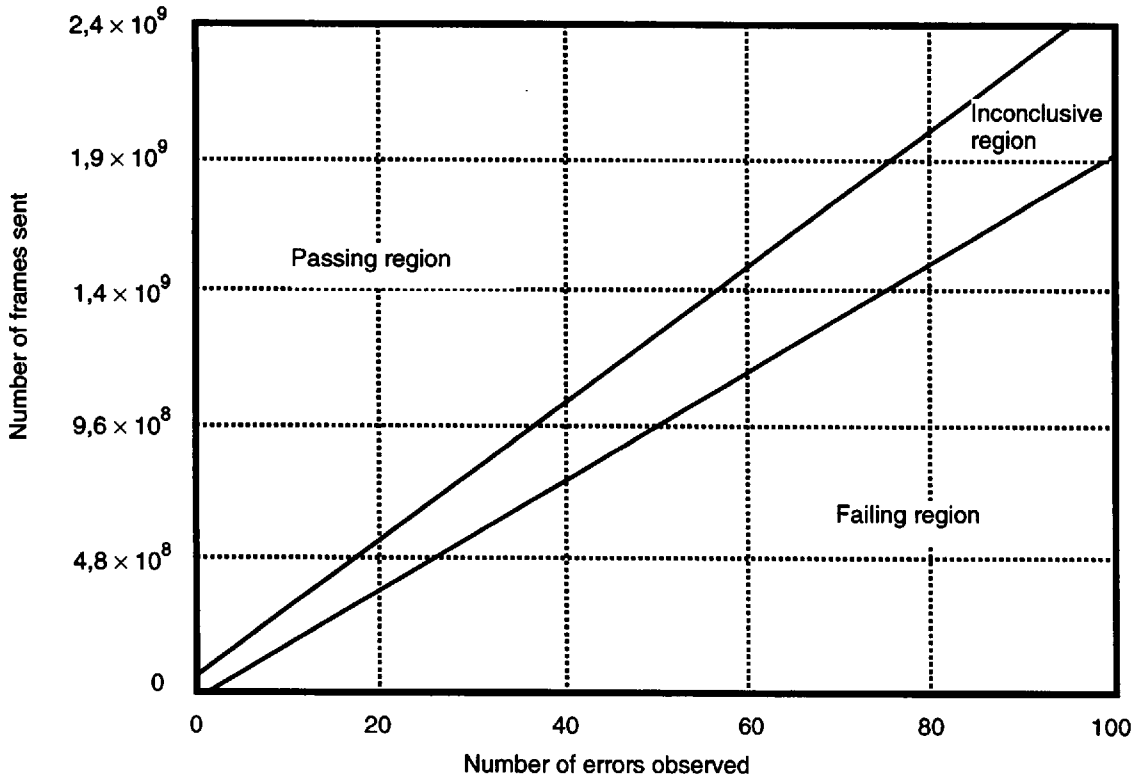

Figure B.2 – BER test at 10^{-12}: errors versus frames sent

Copyright International Organization for Standardization
Provided by IHS under license with ISO
No reproduction or networking permitted without license from IHS
Not for Resale

Annex C
(informative)

FDDI jitter budget and eye opening

C.1 Summary of FDDI jitter budget

Table C.1 summarizes the model jitter budget for FDDI presented in annex E of ISO/IEC 9314-3. It also shows the effects of jitter on the signal eye opening at each point. The minimum eye opening values shown in italics represent the eye opening at the points which are specified in ISO/IEC 9314-3:1990 for conformance, that is at the input and output ports. It is these eye opening values which are measured for this conformance test.

Table C.1 – FDDI link jitter budget and eye opening

	Maximum contribution ns	Running Total ns	Maximum, eye closure ns	Minimum, eye opening ns
Active Output Interface				
Duty Cycle Distortion, p-p, (DCD)	1,00	1,00		
Random jitter, p-p, (RJ)	0,76	0,76		
Total:			1,76	6,24
Data dependent jitter, p-p, (DDJ)	0,60	0,60		
Total:			2,36	5,64
Active Input Interface				
Duty Cycle Distortion, p-p, (DCD)	0,00	1,00		
Random jitter, p-p, (RJ)	0,00	0,76		
Total:			1,76	6,24
Data dependent jitter, p-p, (DDJ)	0,60	1,20		
Total:			2,96	5,04
Phy In				
Duty Cycle Distortion, p-p, (DCD)	0,40	1,40		
Data dependent jitter, p-p, (DDJ)	1,00	2,20		
Random jitter, p-p, (RJ)	2,14	2,27		
Total:			5,87	2,13
Clock Recovery				
Duty Cycle Distortion, p-p, (DCD) *	0,00	1,40		
Data dependent jitter, p-p, (DDJ)	1,50	3,70		
Clock random jitter, p-p	1,80	2,90		
Total:			8,00	0,00

In Table C.1 the systematic jitter components, duty cycle distortion (DCD) and data dependent jitter (DDJ) add linearly. Random jitter (RJ) is added to other RJ terms as the square root of the sum of the squares, before the root mean square random jitter is added linearly to the systematic jitter to compute the running total jitter.

Copyright International Organization for Standardization
Provided by IHS under license with ISO
No reproduction or networking permitted without license from IHS Not for Resale

Standards Survey

The IEC would like to offer you the best quality standards possible. To make sure that we continue to meet your needs, your feedback is essential. Would you please take a minute to answer the questions overleaf and fax them to us at +41 22 919 03 00 or mail them to the address below. Thank you!

Customer Service Centre (CSC)

International Electrotechnical Commission
3, rue de Varembé
1211 Genève 20
Switzerland

or

Fax to: **IEC**/CSC at +41 22 919 03 00

Thank you for your contribution to the standards-making process.

A Prioritaire

Nicht frankieren
Ne pas affranchir

Non affrancare
No stamp required

RÉPONSE PAYÉE

SUISSE

Customer Service Centre (CSC)
International Electrotechnical Commission
3, rue de Varembé
1211 GENEVA 20
Switzerland

Copyright International Organization for Standardization
Provided by IHS under license with ISO
No reproduction or networking permitted without license from IHS
Not for Resale

Q1 Please report on **ONE STANDARD** and **ONE STANDARD ONLY**. Enter the exact number of the standard: *(e.g. 60601-1-1)*

.....

Q2 Please tell us in what capacity(ies) you bought the standard *(tick all that apply)*. I am the/a:

- purchasing agent ❑
- librarian ❑
- researcher ❑
- design engineer ❑
- safety engineer ❑
- testing engineer ❑
- marketing specialist ❑
- other.....

Q3 I work for/in/as a: *(tick all that apply)*

- manufacturing ❑
- consultant ❑
- government ❑
- test/certification facility ❑
- public utility ❑
- education ❑
- military ❑
- other.....

Q4 This standard will be used for: *(tick all that apply)*

- general reference ❑
- product research ❑
- product design/development ❑
- specifications ❑
- tenders ❑
- quality assessment ❑
- certification ❑
- technical documentation ❑
- thesis ❑
- manufacturing ❑
- other.....

Q5 This standard meets my needs: *(tick one)*

- not at all ❑
- nearly ❑
- fairly well ❑
- exactly ❑

Q6 If you ticked NOT AT ALL in Question 5 the reason is: *(tick all that apply)*

- standard is out of date ❑
- standard is incomplete ❑
- standard is too academic ❑
- standard is too superficial ❑
- title is misleading ❑
- I made the wrong choice ❑
- other .....

Q7 Please assess the standard in the following categories, using the numbers:
(1) unacceptable,
(2) below average,
(3) average,
(4) above average,
(5) exceptional,
(6) not applicable

- timeliness.....
- quality of writing.....
- technical contents.....
- logic of arrangement of contents .....
- tables, charts, graphs, figures.....
- other .....

Q8 I read/use the: *(tick one)*

- French text only ❑
- English text only ❑
- both English and French texts ❑

Q9 Please share any comment on any aspect of the IEC that you would like us to know:

.....
.....
.....
.....
.....
.....
.....
.....
.....
.....
.....
.....

Copyright International Organization for Standardization
Provided by IHS under license with ISO
No reproduction or networking permitted without license from IHS
Not for Resale

ISBN 2-8318-5702-3



ICS 33.180.10; 35.100.10

Typeset and printed by the IEC Central Office
GENEVA, SWITZERLAND

Copyright International Organization for Standardization
Provided by IHS under license with ISO
No reproduction or networking permitted without license from IHS

Not for Resale