INTERNATIONAL STANDARD

ISO/IEC 9171-1

First edition
1990-12-15

Information technology — 130 mm optical disk cartridge, write once, for information interchange —

Part 1:
Unrecorded optical disk cartridge

Technologies de l'information — Cartouche de disque optique de 130 mm, non-réinscriptible, pour l'échange d'information —

Partie 1: Cartouche de disque optique vierge

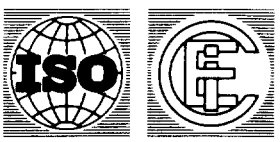

Reference number
ISO/IEC 9171-1 : 1990 (E)

Copyright International Organization for Standardization
Provided by IHS under license with ISO
No reproduction or networking permitted without license from IHS

Not for Resale

Table of Contents

		Page
1	Scope	1
2	Conformance	1
3	Normative references	1
4	Definitions	1
4.1	case	1
4.2	Clamping Zone	1
4.3	Control Track	1
4.4	cyclic redundancy check (CRC)	1
4.5	defect management	2
4.6	disk reference plane	2
4.7	entrance surface	2
4.8	error correction code (ECC)	2
4.9	format	2
4.10	groove	2
4.11	hub	2
4.12	interleaving	2
4.13	land and groove	2
4.14	mark	2
4.15	optical disk	2
4.16	optical disk cartridge (ODC)	2
4.17	recording layer	2
4.18	Reed-Solomon code	2
4.19	spindle	2
4.20	substrate	2
4.21	track	2
4.22	track pitch	2
5	General description	2

© ISO/IEC 1990
All rights reserved. No part of this publication may be reproduced or utilized in any form or by any means, electronic or mechanical, including photocopying and microfilm, without permission in writing from the publisher.

ISO/IEC Copyright Office • Case postale 56 • CH-1211 Genève 20 • Switzerland

Printed in Switzerland

Copyright International Organization for Standardization
Provided by IHS under license with ISO
No reproduction or networking permitted without license from IHS
Not for Resale

6 Environments 3

6.1 Testing environment 3
6.2 Operating environment 3
6.3 Storage environments 3

6.3.1 Short-term storage 3
6.3.2 Long-term storage 4

7 Safety requirements 4

8 Dimensional and mechanical characteristics of the case 4

8.1 General 4
8.2 Case drawings 4
8.3 Sides, reference axes and reference planes 5

8.3.1 Relationship of Sides A and B 5
8.3.2 Reference axes and case reference planes 5

8.4 Materials 5
8.5 Mass 5
8.6 Overall dimensions (figure 3) 5
8.7 Location hole (figure 3) 6
8.8 Alignment hole (figure 3) 6
8.9 Surfaces for reference planes P (figures 4 and 4a) 6
8.10 Insertion slots and detent features (figure 5) 8
8.11 Gripper slots (figure 6) 8
8.12 Write-inhibit holes (figure 7) 8
8.13 Media sensor holes (figure 8) 9
8.14 Head and motor window (figure 10) 10
8.15 Shutter (figure 11) 10
8.16 Slot for shutter opener (figure 11) 10
8.17 Shutter sensor notch (figure 9) 11
8.18 User label areas (figure 13) 11

9 Dimensional and Physical Characteristics of the Disk 12

9.1 Dimensions of the disk 12

9.1.1 Outer diameter 12
9.1.2 Thickness 12
9.1.3 Clamping zone (figure 1) 12
9.1.4 Clearance zone 12

9.2 Mass 12
9.3 Moment of inertia 12
9.4 Imbalance 12
9.5 Axial deflection 12

Copyright International Organization for Standardization
Provided by IHS under license with ISO
No reproduction or networking permitted without license from IHS
Not for Resale

9.6 Axial acceleration 12
9.7 Dynamic radial runout 13
9.8 Radial acceleration 13
9.9 Tilt 13

10 Drop test 13

11 Interface between disk and drive 13

11.1 Clamping technique 13
11.2 Dimensions of the hub (figure 1) 13
11.2.1 Outer diameter of the hub 13
11.2.2 Height of the hub 13
11.2.3 Diameter of the centre hole 13
11.2.4 Height of the top of the centre hole at diameter D_9 14
11.2.5 Centring length at diameter D_9 14
11.2.6 Chamfer at inner diameter D_9 14
11.2.7 Chamfer at outer diameter D_8 14
11.2.8 Outer diameter of the magnetizable ring 14
11.2.9 Inner diameter of the magnetizable ring 14
11.2.10 Thickness of the magnetizable material 14
11.2.11 Position of the top of the magnetizable ring relative to the disk reference plane 14
11.3 Magnetizable material 14
11.4 Clamping force 14
11.5 Capture cylinder for the hub (figure 12) 15
11.6 Disk position in the operating condition (figure 12) 15

12 Characteristics of the substrate 30

12.1 Index of refraction 30
12.2 Thickness 30
12.3 Birefringence 30

13 Characteristics of the recording layer 30

13.1 Test conditions 30
13.1.1 General 30
13.1.2 Read conditions 31
13.1.3 Write conditions 31
13.2 Baseline reflectance 31
13.2.1 General 31
13.2.2 Actual value 32
13.2.3 Requirement 32
13.3 Definitions of signals 32

Copyright International Organization for Standardization
Provided by IHS under license with ISO
No reproduction or networking permitted without license from IHS
Not for Resale

13.4 Prerecorded marks 33
13.5 User-written data 33
13.5.1 Signal I_L 33
13.5.2 Signal I_H 33
13.5.3 Narrow-band signal-to-noise ratio (figure 15) 33
13.5.4 Cross-talk 34

ANNEX A - Office environment 35

ANNEX B - Transportation 36

ANNEX C - Measurement of birefringence 37

ANNEX D - Definition of write and erase pulse width 40

Copyright International Organization for Standardization
Provided by IHS under license with ISO
No reproduction or networking permitted without license from IHS
Not for Resale

FOREWORD

ISO (the International Organization for Standardization) and IEC (the International Electrotechnical Commission) form the specialized system for worldwide standardization. National bodies that are members of ISO or IEC participate in the development of International Standards through technical committees established by the respective organization to deal with particular fields of technical activity. ISO and IEC technical committees collaborate in fields of mutual interest. Other international organizations, governmental and non-governmental, in liaison with ISO and IEC, also take part in the work.

In the field of information technology, ISO and IEC have established a joint technical committee, ISO/IEC JTC 1. Draft International Standards adopted by the joint technical committee are circulated to national bodies for voting. Publication as an International Standard requires approval by at least 75 % of the national bodies casting a vote.

International Standard ISO/IEC 9171-1 was prepared by Joint Technical Committee ISO/IEC JTC 1, *Information technology*.

ISO/IEC 9171 consists of the following parts, under the general title: *Information technology — 130 mm optical disk cartridge, write once, for information interchange*:

Part 1: Unrecorded optical disk cartridge

Part 2: Recording format

Annexes C and D form an integral part of this part of ISO/IEC 9171. Annexes A and B are for information only.

Copyright International Organization for Standardization
Provided by IHS under license with ISO
No reproduction or networking permitted without license from IHS
Not for Resale

INTRODUCTION

ISO/IEC 9171 specifies the characteristics of 130 mm optical disk cartridges (ODC) of the type providing for information to be written once and read many times. ISO/IEC 9171-2 specifies two formats for the physical disposition of the tracks and sectors, the error correction codes, the modulation methods used for recording and the quality of the recorded signals.

ISO/IEC 9171-1 and ISO/IEC 9171-2 together with a standard for volume and file structure provide for full data interchange between data processing systems.

Copyright International Organization for Standardization
Provided by IHS under license with ISO
No reproduction or networking permitted without license from IHS
Not for Resale

Information technology — 130 mm optical disk cartridge, write once, for information interchange —

Part 1:
Unrecorded optical disk cartridge

1 Scope

This part of ISO/IEC 9171 specifies

- definitions of essential concepts,
- the environment in which the characteristics are to be tested,
- the environments in which the cartridge is to be operated and stored,
- the mechanical, physical and dimensional characteristics of the case and of the optical disk,
- the optical characteristics and the recording characteristics for recording the information once and for reading it many times, so as to provide physical interchangeability between data processing systems.

2 Conformance

A 130 mm optical disk cartridge is in conformance with this part of ISO/IEC 9171 if it meets all the mandatory requirements specified therein.

3 Normative references

The following standards contain provisions which, through reference in this text, constitute provisions of this part of ISO/IEC 9171. At the time of publication, the editions indicated were valid. All standards are subject to revision, and parties to agreements based on this part of ISO/IEC 9171 are encouraged to investigate the possibility of applying the most recent editions of the standards listed below. Members of IEC and ISO maintain registers of currently valid International Standards.

ISO 683-13 *Heat treatable steels, alloy steels and free-cutting steels - Part 13 Wrought stainless steels*

IEC 950 *Safety of information technology equipment including electrical business equipment*

4 Definitions

For the purposes of this part of ISO/IEC 9171, the following definitions apply.

4.1 **case:** The housing for an optical disk, that protects the disk and facilitates disk interchange.

4.2 **Clamping Zone:** The annular part of the disk within which the clamping force is applied by the clamping device.

4.3 **Control Track:** A track containing the information on media parameters and format necessary for writing and reading the remaining tracks on the optical disk.

4.4 **cyclic redundancy check (CRC):** A method for detecting errors in data.

Copyright International Organization for Standardization
Provided by IHS under license with ISO
No reproduction or networking permitted without license from IHS
Not for Resale

4.5 **defect management:** A method for handling defective areas on the disk.

4.6 **disk reference plane:** A plane defined by the perfectly flat annular surface of an ideal spindle on to which the clamping zone of the disk is clamped, and which is normal to the axis of rotation.

4.7 **entrance surface:** The surface of the disk on to which the optical beam first impinges.

4.8 **error correction code (ECC):** An error-detecting code designed to correct certain kinds of errors in data.

4.9 **format:** The arrangement or layout of the data on a medium.

4.10 **groove:** See 4.13.

4.11 **hub:** The central feature on the disk which interacts with the spindle of the disk drive to provide radial centring and the clamping force.

4.12 **interleaving:** The process of allocating the physical sequence of units of data so as to render the data more immune to burst errors.

4.13 **land and groove:** A trench-like feature of the disk, applied before the recording of any information, and used to define the track location. The groove is located nearer to the entrance surface than the land with which it is paired to form a track.

4.14 **mark:** A feature of the recording layer which may take the form of a hole, a pit, a bubble or any other type or form that can be sensed by the optical system. The pattern of marks represents the data on the disk.

4.15 **optical disk:** A disk that will accept and retain information in the form of marks in a recording layer, that can be read with an optical beam.

4.16 **optical disk cartridge (ODC):** A device consisting of a case containing an optical disk.

4.17 **recording layer:** A layer of the disk on, or in, which data is written during manufacture and/or use.

4.18 **Reed-Solomon code:** An error detection and/or correction code which is particularly suited to the correction of errors which occur in bursts or are strongly correlated.

4.19 **spindle:** The part of the disk drive which contacts the disk and/or hub.

4.20 **substrate:** A transparent layer of the disk, provided for mechanical protection of the recording layer, through which the optical beam accesses the recording layer.

4.21 **track:** The path which is followed by the focus of the optical beam during one revolution of the disk.

4.22 **track pitch:** The distance between adjacent track centrelines, measured in a radial direction.

5 General description

The optical disk cartridge which is the subject of this part of ISO/IEC 9171 consists of a case containing an optical disk. An optical beam is used to write data to, or to read data from, the disk.

A disk can be recordable either on one or on both sides.

The disk is intended for use in a drive with optical access from one side only. To gain access to the second side of a disk recordable on both sides, the cartridge must be reversed before insertion into the drive.

A disk recordable on one side only consists of a transparent protective layer acting as a substrate with a recording layer on one side and a hub on the other. The recording layer is accessed by an optical beam through the substrate. A disk recordable on both sides consists of two disks, each recordable on one side, and assembled together with the recording layers on the inside.

Copyright International Organization for Standardization
Provided by IHS under license with ISO
No reproduction or networking permitted without license from IHS
Not for Resale

Other constructions are permitted but must have the same optical characteristics.

6 Environments

6.1 Testing environment

Unless otherwise specified, tests and measurements made on the optical disk cartridge to check the requirements of this part of ISO/IEC 9171 shall be carried out in an environment where the air immediately surrounding the optical disk cartridge is within the following conditions.

Temperature	23°C ± 2°C
Relative humidity	45% to 55%
Atmospheric pressure	100 kPa ± 3,5 kPa

Before testing the optical disk cartridge shall be conditioned in this environment for 48 h minimum. No condensation on or in the optical disk cartridge shall occur.

6.2 Operating environment

Optical disk cartridges used for data interchange shall be operated in an environment where the air immediately surrounding the optical disk cartridge is within the following conditions.

Temperature	10°C to 50°C
Relative humidity	10% to 80%
Wet bulb temperature	29°C max.
Atmospheric pressure	75 kPa to 105 kPa
Temperature gradient	10°C /h max.
Relative humidity gradient	10% /h max.
Air cleanliness	office environment (see Annex A)

No condensation on or in the optical disk cartridge shall be allowed to occur.

If an optical disk cartridge has been exposed during storage and/or transportation to conditions outside those given above, it shall be acclimatised in the operating environment for at least 2 h before use. In the operating environment an ODC shall be capable of withstanding a thermal shock of up to 20 °C when inserted into, or removed from, the drive.

6.3 Storage environments

Storage environment is the ambient condition to which the optical disk cartridge without any additional protective enclosure, is exposed when stored.

6.3.1 Short-term storage

For a maximum period of 14 consecutive days the optical disk cartridge shall not be exposed to environmental conditions outside those given below.

Temperature	-20°C to 55°C
Relative humidity	5% to 90%
Wet bulb temperature	29°C max.
Atmospheric pressure	75 kPa to 105 kPa
Temperature gradient	20°C /h max.
Relative humidity gradient	20% /h max.
Air cleanliness	office environment (see Annex A)

No condensation on or in the optical disk cartridge shall be allowed to occur.

Copyright International Organization for Standardization
Provided by IHS under license with ISO
No reproduction or networking permitted without license from IHS
Not for Resale

Long-term storage

For a storage period longer than 14 days the optical disk cartridge shall not be exposed to environmental conditions outside those given below.

Temperature	-10°C to 50°C
Relative humidity	10% to 90%
Wet bulb temperature	29°C max.
Atmospheric pressure	75 kPa to 105 kPa
Temperature gradient	15°C /h max.
Relative humidity gradient	10% /h max.
Air cleanliness	office environment (see Annex A)

No condensation on or in the optical disk cartridge shall be allowed to occur.

7 Safety requirements

The cartridge and its components shall satisfy the safety requirements of IEC 950, when used in its intended manner or in any foreseeable use in an information processing system.

8 Dimensional and mechanical characteristics of the case

8.1 General

The case shall be a rigid, protective enclosure of rectangular shape and include a shutter which uncovers access windows upon insertion into the drive, and automatically covers them upon removal from the drive. The case shall have means for positioning and identifying the cartridge, and write-inhibit holes.

The dimensions of the inside of the case are not specified in this part of ISO/IEC 9171, but are determined by the movement of the disk inside the case allowed by 11.5 and 11.6.

8.2 Case drawings

The case is represented schematically by the following drawings:

- Figure 1 shows the hub dimensions.
- Figure 2 shows a composite drawing of Side A of the case in isometric form, with the major features identified from Side A.
- Figure 3 defines the envelope of the case with respect to a location hole at the intersection of the X and Y axes, and reference plane P.
- Figure 4 defines the surfaces S_1, S_2, S_3 and S_4 which establish the reference plane P.
- Figure 4a is an enlarged view of surface S_3.
- Figure 5 defines the details of the insertion slot and detent.
- Figure 6 defines the gripper slots, used for automatic handling.
- Figure 7 defines the write-inhibit holes.
- Figure 8 defines the media ID sensor holes.
- Figure 9 defines the shutter sensor notch.
- Figure 10 defines the access holes for the head and the motor.
- Figure 11 defines the shutter opening features.
- Figure 12 defines the capture cylinder.

Copyright International Organization for Standardization
Provided by IHS under license with ISO
No reproduction or networking permitted without license from IHS
Not for Resale

- Figure 13 defines the user label areas.

8.3 Sides, reference axes and reference planes

8.3.1 Relationship of Sides A and B

The features essential for physical interchangeability are represented in figure 2. When Side A of the cartridge faces upwards, Side A of the disk faces downwards. Sides A and B of the case are identical as far as the features given here are concerned. The description is given for one side only. References to Sides A and B can be changed to B or A respectively.

Only the shutter and the slot for the shutter opener, described in 8.14 and 8.15 are not identical for both sides of the case.

8.3.2 Reference axes and case reference planes

There is a reference plane P for each side of the case. Each reference plane P contains two orthogonal axes X and Y to which the dimensions of the case are referred. The intersection of the X and Y axes defines the centre of the location hole. The X axis extends through the centre of the alignment hole.

8.4 Materials

The case shall be constructed from any suitable materials such that it meets the requirements of this part of ISO/IEC 9171.

8.5 Mass

The mass of the case without the optical disk shall be 150 g max.

8.6 Overall dimensions (figure 3)

The total length of the case shall be

$$L_1 = 153{,}0 \text{ mm} \pm 0{,}4 \text{ mm}.$$

The distance from the top of the case to the reference axis X shall be

$$L_2 = 127{,}0 \text{ mm} \pm 0{,}3 \text{ mm}.$$

The distance from the bottom of the case to the reference axis X shall be

$$L_3 = 26{,}0 \text{ mm} \pm 0{,}3 \text{ mm}$$

The total width of the case shall be

$$L_4 = 135{,}0 \text{ mm} \begin{matrix} +\ 0{,}0 \text{ mm} \\ -\ 0{,}6 \text{ mm} \end{matrix}$$

The distance from the left hand side of the cartridge to the reference axis Y shall be

$$L_5 = 128{,}5 \text{ mm} \begin{matrix} +\ 0{,}0 \text{ mm} \\ -\ 0{,}5 \text{ mm} \end{matrix}$$

The distance from the right hand side to the reference axis Y shall be

$$L_6 = 6{,}5 \text{ mm} \pm 0{,}2 \text{ mm}.$$

The width shall be reduced on the top as defined by the radius

$$R_1 = L_4$$

originating from a point defined by L_5 and

$$L_7 = 101{,}0 \text{ mm} \pm 0{,}3 \text{ mm}.$$

Copyright International Organization for Standardization
Provided by IHS under license with ISO
No reproduction or networking permitted without license from IHS
Not for Resale

The two corners of the top shall be rounded with a radius

R_2 = 1,5 mm ± 0,5 mm

and the two corners at the bottom with a radius

R_3 = 3,0 mm ± 1,0 mm.

The thickness of the case shall be

L_8 = 11,00 mm ± 0,30 mm.

The eight long edges of the case shall be rounded with a radius

R_4 = 1,0 mm max.

8.7 Location hole (figure 3)

The centre of the location hole shall coincide with the intersection of the reference axes X and Y. It shall have a square form with a side length of

$$L_9 = 4{,}10 \text{ mm} \begin{matrix} +\ 0{,}00 \text{ mm} \\ -\ 0{,}06 \text{ mm} \end{matrix}$$

held to a depth of

L_{10} = 1,5 mm (i.e. typical wall thickness),

after which a cavity expands through to the alignment hole on the opposite side of the case.

The lead-in edges shall be rounded with radius

R_5 = 0,5 mm max.

8.8 Alignment hole (figure 3)

The centre of the alignment hole shall lie on reference axis X at a distance of

L_{11} = 122,0 mm ± 0,2 mm

from the reference axis Y.

The dimensions of the hole shall be

$$L_{12} = 4{,}10 \text{ mm} \begin{matrix} +\ 0{,}00 \text{ mm} \\ -\ 0{,}06 \text{ mm} \end{matrix}$$

and

$$L_{13} = 5{,}0 \text{ mm} \begin{matrix} +\ 0{,}2 \text{ mm} \\ -\ 0{,}0 \text{ mm} \end{matrix}$$

held to a depth of L_{10}, after which a cavity expands through to the location hole on the opposite side of the case.

The lead-in edges shall be rounded with radius R_5.

8.9 Surfaces for reference planes P (figures 4 and 4a)

The reference plane P for a side of the case shall contain four surfaces S_1, S_2, S_3 and S_4 on that side of the case, specified as follows:

- Two circular surfaces S_1 and S_2.

Copyright International Organization for Standardization
Provided by IHS under license with ISO
No reproduction or networking permitted without license from IHS
Not for Resale

Surface S_1 shall be a circular area centred around the square location hole and have a diameter of

$$D_1 = 9{,}0 \text{ mm min.}$$

Surface S_2 shall be a circular area centred around the rectangular alignment hole and have a diameter of

$$D_2 = 9{,}0 \text{ mm min.}$$

- Two elongated surfaces S_3 and S_4, that follow the contour of the cartridge and shutter edges.

Surfaces S_3 and S_4 are shaped symmetrically.

Surface S_3 shall be defined by two circular sections with radii

$$R_6 = 1{,}5 \text{ mm} \pm 0{,}1 \text{ mm}$$

with an origin given by

$$L_{14} = 4{,}0 \text{ mm} \pm 0{,}1 \text{ mm}$$

$$L_{15} = 86{,}0 \text{ mm} \pm 0{,}3 \text{ mm}$$

and

$$R_7 = 1{,}5 \text{ mm} \pm 0{,}1 \text{ mm}$$

with an origin given by

$$L_{16} = 1{,}9 \text{ mm} \pm 0{,}1 \text{ mm}$$

$$L_{17} = 124{,}5 \text{ mm} \pm 0{,}3 \text{ mm}$$

The arc with radius R_7 shall continue on the right hand side with radius

$$R_8 = 134{,}0 \text{ mm} \begin{matrix} +\ 0{,}2 \text{ mm} \\ -\ 0{,}7 \text{ mm} \end{matrix}$$

which is a dimension resulting from $L_5 + L_{14} + R_6$ with an origin given by L_5 and L_7. A straight, vertical line shall smoothly join the arc of R_6 to the arc of R_8.

The left hand side of S_3 shall be bounded by radius

$$R_9 = 4{,}5 \text{ mm} \pm 0{,}3 \text{ mm}$$

which is a dimension resulting from $L_{18} + L_{14} - R_6$ with an origin given by

$$L_{18} = 2{,}0 \text{ mm} \pm 0{,}1 \text{ mm}$$

$$L_{19} = 115{,}5 \text{ mm} \pm 0{,}3 \text{ mm}$$

The left hand side of the boundary shall be closed by two straight lines. The first one shall smoothly join the arc of R_6 to the arc of R_9. The second one shall run from the left hand tangent of R_7 to its intersection with R_9. Along the left hand side of surface S_3 there shall be a zone to protect S_3 from being damaged by the shutter. In order to keep this zone at a minimum practical width,

$$R_{10} = 4{,}1 \text{ mm max.}$$

This radius originates from the same point as R_9.

Copyright International Organization for Standardization
Provided by IHS under license with ISO
No reproduction or networking permitted without license from IHS
Not for Resale

8.10 Insertion slots and detent features (figure 5)

The case shall have two symmetrical insertion slots with embedded detent features. The slots shall have a length of

$$L_{20} = 26{,}0 \text{ mm} \pm 0{,}3 \text{ mm}$$

a width of

$$L_{21} = 6{,}0 \text{ mm} \begin{matrix} + 0{,}3 \text{ mm} \\ - 0{,}0 \text{ mm} \end{matrix}$$

and a depth of

$$L_{22} = 3{,}0 \text{ mm} \pm 0{,}1 \text{ mm}$$

located

$$L_{23} = 2{,}5 \text{ mm} \pm 0{,}2 \text{ mm}$$

from reference plane P.

The slots shall have a lead-in chamfer given by

$$L_{24} = 0{,}5 \text{ mm max.}$$

$$L_{25} = 5{,}0 \text{ mm max.}$$

The detent notch shall be a semi-circle of radius

$$R_{11} = 3{,}0 \text{ mm} \pm 0{,}2 \text{ mm}$$

with the origin given by

$$L_{26} = 13{,}0 \text{ mm} \pm 0{,}3 \text{ mm}$$

$$L_{27} = 2{,}0 \text{ mm} \pm 0{,}1 \text{ mm}$$

8.11 Gripper slots (figure 6)

The case shall have two symmetrical gripper slots with a depth of

$$L_{28} = 5{,}0 \text{ mm} \pm 0{,}3 \text{ mm}$$

from the edge of the case and a width of

$$L_{29} = 6{,}0 \text{ mm} \pm 0{,}3 \text{ mm}$$

The upper edge of a slot shall be

$$L_{30} = 12{,}0 \text{ mm} \pm 0{,}3 \text{ mm}$$

above the bottom of the case.

8.12 Write-inhibit holes (figure 7)

Sides A and B shall each have a write-inhibit hole. The case shall include a device for opening and closing each hole. The hole at the left hand side of Side A of the case, between B-B of figure 7, is the write-inhibit for Side A of the disk. The protected side of the disk shall be made clear by inscriptions on the case or by the fact that the device for Side A of the disk can only be operated from Side A of the case.

When writing on Side A of the disk is not allowed, the hole shall be open all through the case. It shall have a diameter

$$D_3 = 4{,}0 \text{ mm min.}$$

Copyright International Organization for Standardization
Provided by IHS under license with ISO
No reproduction or networking permitted without license from IHS
Not for Resale

Its centre shall be specified by

L_{31} = 8,0 mm ± 0,2 mm

L_{32} = 111,0 mm ± 0,3 mm

on Side A of the case.

When writing is allowed on Side A of the disk, the hole defined above shall be closed on Side A of the case, at a depth of typically L_{10}, i.e. the wall thickness of the case. In this state, the opposite side of the same hole, at Side B of the case, shall be closed and not recessed from the reference plane P of Side B of the case by more than

L_{33} = 0,5 mm

The opposite side of the write-inhibit hole for protecting Side B of the disk shall have a diameter D_3. Its centre shall be specified by L_{31} and

L_{34} = 11,0 mm ± 0,2 mm

on Side A of the case.

8.13 Media sensor holes (figure 8)

There shall be two sets of four media sensor holes. The set of holes at the lower left hand corner of Side A of the case, between C-C of figure 8, pertains to Side A of the disk. The holes shall extend through the case, and have a diameter of

$$D_4 = 4{,}0 \text{ mm} \begin{matrix} + \ 0{,}3 \text{ mm} \\ - \ 0{,}0 \text{ mm} \end{matrix}$$

the positions of their centres shall be specified by

L_{35} = 19,5 mm ± 0,2 mm

L_{34} = (see 8.12)

L_{36} = 17,0 mm ± 0,2 mm

L_{37} = 23,0 mm ± 0,2 mm

L_{38} = 29,0 mm ± 0,2 mm

L_{39} = 93,0 mm ± 0,3 mm

L_{40} = 99,0 mm ± 0,3 mm

L_{41} = 105,0 mm ± 0,3 mm

L_{32} = (see 8.12).

A hole is deemed to be open when there is no obstruction in this hole over a diameter D_4 all through the case.

A hole for Side A of the disk is deemed to be closed, when the hole is closed on both Side A and Side B of the case. The closure shall be recessed from reference plane P by

L_{42} = 0,1 mm max.

The holes are numbered consecutively from 1 to 4. Hole No. 1 is the hole closest to the left hand edge of the case. The optical disk cartridge according to this part of ISO/IEC 9171 uses only holes No. 1 and No. 2. The other two holes shall be in the closed state.

Copyright International Organization for Standardization
Provided by IHS under license with ISO
No reproduction or networking permitted without license from IHS
Not for Resale

The function of hole No. 1 is to indicate whether the baseline reflectance of the disk is high or low (see 13.2.1). When the hole is closed the baseline reflectance is low, when it is open the baseline reflectance is high.

The function of hole No. 2 is to indicate whether the cartridge as loaded in the drive can be operated. When the hole is closed the cartridge is operable, when it is open the cartridge is not operable.

8.14 Head and motor window (figure 10)

The case shall have a window on each side to enable the optical head and the motor to access the disk. The dimensions are referenced to a centreline, located at a distance of

L_{46} = 61,0 mm ± 0,2 mm

to the left of reference axis Y.

The width of the head access shall be

L_{47} = 20,00 mm min.

L_{48} = 20,00 mm min.

and its height shall extend from

L_{49} = 118,2 mm min. to

L_{50} = 57,0 mm max.

The four inside corners shall be rounded with a radius of

R_{12} = 3,0 mm max.

The motor access shall have a diameter of

D_5 = 35,0 mm min.

and its centre shall be defined by L_{46} and

L_{51} = 43,0 mm ± 0,2 mm.

8.15 Shutter (figure 11)

The case shall employ a spring-loaded, unidirectional shutter with an optional latch, designed to completely cover the head and motor window when closed. The windows shall be exposed to at least the minimum window size specified in 8.14 by a shutter movement of 41,5 mm min. The shutter shall be free to slide in a recessed area of the case in such a way as to ensure that the overall thickness shall not exceed L_8. The spring shall be sufficiently strong to close a free-sliding shutter, irrespective of the orientation of the cartridge.

The shutter opening force shall be 3 N max.

The right hand side of the top of the shutter shall have a lead-in ramp with an angle

A_2 = 25° max.

The distance from the reference planes P to the nearest side of the ramp shall be

L_{52} = 3,0 mm max.

8.16 Slot for shutter opener (figure 11)

The shutter shall have only one slot in which the shutter opener of the drive can engage to open the shutter. The slot shall be dimensioned as follows:

Copyright International Organization for Standardization
Provided by IHS under license with ISO
No reproduction or networking permitted without license from IHS
Not for Resale

When the shutter is closed, the vertical edge used to push the shutter open shall be located at a distance of

$$L_{53} = 34{,}5 \text{ mm} \pm 0{,}5 \text{ mm}$$

from reference axis Y on Side B of the case.

The length of the slot shall be

$$L_{54} = 4{,}5 \text{ mm} \pm 0{,}1 \text{ mm}$$

and the angle of the lead-out ramp shall be

$$A_3 = 52{,}5° \pm 7{,}5°$$

The depth of the slot shall be

$$L_{55} = 3{,}5 \text{ mm} \pm 0{,}1 \text{ mm}$$

The width of the slot from the reference plane P of Side B of the case shall be

$$L_{56} = 6{,}0 \text{ mm} \begin{matrix} + 0{,}5 \text{ mm} \\ - 0{,}0 \text{ mm} \end{matrix}$$

If a shutter latch is employed, the distance between the latch and reference plane P of Side B of the case shall be

$$L_{57} = 3{,}0 \text{ mm max.}$$

8.17 Shutter sensor notch (figure 9)

The shutter sensor notch is designed to make it possible to ensure that the shutter is fully open after insertion of the optical disk cartridge into the drive. Therefore, the notch shall be exposed only when the shutter is fully open.

The dimensions shall be

$$L_{43} = 3{,}5 \text{ mm} \pm 0{,}2 \text{ mm}$$

$$L_{44} = 71{,}0 \text{ mm} \pm 0{,}3 \text{ mm}$$

and

$$L_{45} = 9{,}0 \text{ mm} \begin{matrix} + 0{,}0 \text{ mm} \\ - 2{,}0 \text{ mm} \end{matrix}$$

The notch shall have a lead-out ramp with an angle of

$$A_1 = 45° \pm 2°$$

8.18 User label areas (figure 13)

The case shall have the following minimum areas for user labels:

- on Side A and Side B: 35,0 mm x 65,0 mm
- on the bottom side: 6,0 mm x 98,0 mm

These areas shall be recessed by 0,2 mm min. Their positions are specified by the following dimensions and relations between dimensions (see figure 13).

L_{61} = 4,5 mm min.

$L_{62} - L_{61}$ = 65,0 mm min.

$L_{64} - L_{63}$ = 35,0 mm min.

Copyright International Organization for Standardization
Provided by IHS under license with ISO
No reproduction or networking permitted without license from IHS
Not for Resale

L_{65} = 4,5 mm min.

$L_{66} - L_{65}$ = 65,0 mm min.

$L_{67} + L_{68}$ = 35,0 mm min.

$L_8 - L_{71} - L_{72}$ = 6,0 mm min.

$L_4 - L_{69} - L_{70}$ = 98,0 mm min.

9 Dimensional and Physical Characteristics of the Disk

9.1 Dimensions of the disk

9.1.1 Outer diameter

The outer diameter of the disk shall be 130,0 mm nominal. The tolerance is determined by the movement of the disk inside the case allowed by 11.5 and 11.6.

9.1.2 Thickness

The total thickness of the disk outside the hub area shall not exceed 3,20 mm.

9.1.3 Clamping zone (figure 1)

The outer diameter D_6 of the zone shall be

D_6 = 35,0 mm min.

The inner diameter D_7 of the zone shall be

D_7 = 27,0 mm max.

9.1.4 Clearance zone

Within the zone defined by the outer diameter of the clamping zone (D_6) and the inner diameter of the Reflective Zone (see 4.2 of ISO/IEC 9171-2) there shall be no projection from the disk reference plane in direction of the optical system of more than 0,2 mm.

9.2 Mass

The mass of the disk shall not exceed 120 g.

9.3 Moment of inertia

The moment of inertia of the disk shall not exceed 0,22 $g.m^2$.

9.4 Imbalance

The imbalance of the disk shall not exceed 0,01 g.m.

9.5 Axial deflection

The deviation of any point of the recording layer from its nominal position, in a direction normal to the disk reference plane, shall not exceed ± 0,30 mm for rotational frequencies of the disk up to 30 Hz. The deviation shall be measured by the optical system defined in 13.1.1 and 13.1.2.

The nominal position of the recording layer with respect to the disk reference plane is determined by the nominal thickness of the substrate and its refractive index.

9.6 Axial acceleration

The acceleration of the recording layer along any fixed line normal to the disk reference plane shall not exceed 20 m/s^2 in a bandwidth from 30 Hz to 1,5 kHz for a rotational frequency of the disk of 30,0 Hz ± 0,3 Hz. The acceleration shall be measured by the optical system defined in 13.1.1 and 13.1.2.

Copyright International Organization for Standardization
Provided by IHS under license with ISO
No reproduction or networking permitted without license from IHS
Not for Resale

9.7 Dynamic radial runout

The difference between the maximum and the minimum distance of any track from the axis of rotation, measured along a fixed radial line over one revolution of the disk, shall not exceed 50 μm, as measured by the optical system, at rotational frequencies of the disk up to 30 Hz.

9.8 Radial acceleration

The acceleration of any track along a fixed radial line shall not exceed 6 m/s^2 in a bandwidth from 30 Hz to 1,5 kHz, as measured by the optical system, at a rotational frequency of the disk of 30,0 Hz ± 0,3 Hz.

9.9 Tilt

The tilt angle, defined as the angle which the normal to the entrance surface makes with the normal to the disk reference plane, shall not exceed 5 mrad in the operating environment.

10 Drop test

The optical disk cartridge shall withstand dropping on each surface and on each corner from a height of 760 mm on to a concrete floor covered with a vinyl layer 2 mm thick. The cartridge shall withstand all such impacts without any functional failure.

11 Interface between disk and drive

11.1 Clamping technique

Radial positioning of the optical disk shall be provided by the centring of the axle of the spindle in the centre hole of the hub.

The turn-table of the drive spindle shall support the disk in the clamping zone, determining the axial position of the disk in the case.

A clamping force shall be provided by the attraction between magnets in the spindle and a magnetizable ring in the hub.

11.2 Dimensions of the hub (figure 1)

11.2.1 Outer diameter of the hub

This diameter shall be

$$D_8 = 25{,}0 \text{ mm} \begin{matrix} +\ 0{,}0 \text{ mm} \\ -\ 0{,}2 \text{ mm} \end{matrix}$$

11.2.2 Height of the hub

This height shall be

$$h_1 = 2{,}2 \text{ mm} \begin{matrix} +\ 0{,}0 \text{ mm} \\ -\ 0{,}2 \text{ mm} \end{matrix}$$

11.2.3 Diameter of the centre hole

The diameter of the centre hole shall be

$$D_9 = 4{,}004 \text{ mm} \begin{matrix} +\ 0{,}012 \text{ mm} \\ -\ 0{,}000 \text{ mm} \end{matrix}$$

Copyright International Organization for Standardization
Provided by IHS under license with ISO
No reproduction or networking permitted without license from IHS
Not for Resale

11.2.4 Height of the top of the centre hole at diameter D_9

The height of the top of the centre hole at diameter D_9, measured above the disk reference plane, shall be

$$h_2 = 2{,}0 \text{ mm min.}$$

11.2.5 Centring length at diameter D_9

This length shall be

$$h_3 = 0{,}5 \text{ mm min.}$$

The hole shall have a diameter larger than, or equal to, D_9 between this centring length and the disk reference plane. The hole shall extend through the substrate.

11.2.6 Chamfer at inner diameter D_9

The height of the outer chamfer of the centre hole of the hub shall be

$$h_4 = 0{,}2 \text{ mm max.}$$

The angle of the chamfer shall be 45°, or a corresponding full radius shall be used.

11.2.7 Chamfer at outer diameter D_8

The height of the chamfer at the rim of the hub shall be

$$h_5 = 0{,}2 \text{ mm} \begin{matrix} + \ 0{,}2 \text{ mm} \\ - \ 0{,}0 \text{ mm} \end{matrix}$$

The angle of the chamfer shall be 45°, or a corresponding full radius shall be used.

11.2.8 Outer diameter of the magnetizable ring

This diameter shall be

$$D_{10} = 19{,}0 \text{ mm min.}$$

11.2.9 Inner diameter of the magnetizable ring

This diameter shall be

$$D_{11} = 8{,}0 \text{ mm max.}$$

11.2.10 Thickness of the magnetizable material

This thickness shall be

$$h_6 = 0{,}5 \text{ mm min.}$$

11.2.11 Position of the top of the magnetizable ring relative to the disk reference plane

This position shall be

$$h_7 = 2{,}2 \text{ mm} \begin{matrix} + \ 0{,}0 \text{ mm} \\ - \ 0{,}1 \text{ mm} \end{matrix}$$

11.3 Magnetizable material

The magnetizable material shall be ferritic stainless steel (ISO 683-13, Type 8) or any suitable material with similar magnetic characteristics.

11.4 Clamping force

The clamping force exerted by the spindle shall not exceed 14 N.

Copyright International Organization for Standardization
Provided by IHS under license with ISO
No reproduction or networking permitted without license from IHS
Not for Resale

11.5 Capture cylinder for the hub (figure 12)

The capture cylinder is defined as the volume in which the spindle can expect the centre of the hole of the hub to be at the maximum height of the hub, just prior to capture. The size of the cylinder limits the allowable play of the disk inside its cavity in the case. This cylinder is referred to perfectly located and perfectly sized alignment and location pins in the drive, and includes tolerances of dimensions of the case and the disk between the two pins mentioned and the centre of the hub. The bottom of the cylinder is parallel to the reference plane P, and shall be located at a distance of

$$L_{58} = 0{,}5 \text{ mm min.}$$

above the reference plane P of Side B of the case when Side A of the disk is to be used. The top of the cylinder shall be located at a distance of

$$L_{59} = 4{,}3 \text{ mm max.}$$

above the same reference plane. The diameter of the cylinder shall be

$$D_{12} = 3{,}0 \text{ mm max.}$$

Its centre shall be defined by the nominal values of L_{46} and L_{51}.

11.6 Disk position in the operating condition (figure 12)

When the disk is in the operating condition within the drive, the position of the active recording layer shall be

$$L_{60} = 5{,}35 \text{ mm} \pm 0{,}15 \text{ mm}$$

above reference plane P of that side of the case that faces the optical system. Moreover, the torque to be exerted on the disk in order to maintain a rotational frequency of 30 Hz shall not exceed 0,01 N.m, when the axis of rotation is within a circle with a diameter of

$$D_{13} = 0{,}2 \text{ mm max.}$$

and a centre given by the nominal values of L_{46} and L_{51}.

Copyright International Organization for Standardization
Provided by IHS under license with ISO
No reproduction or networking permitted without license from IHS
Not for Resale

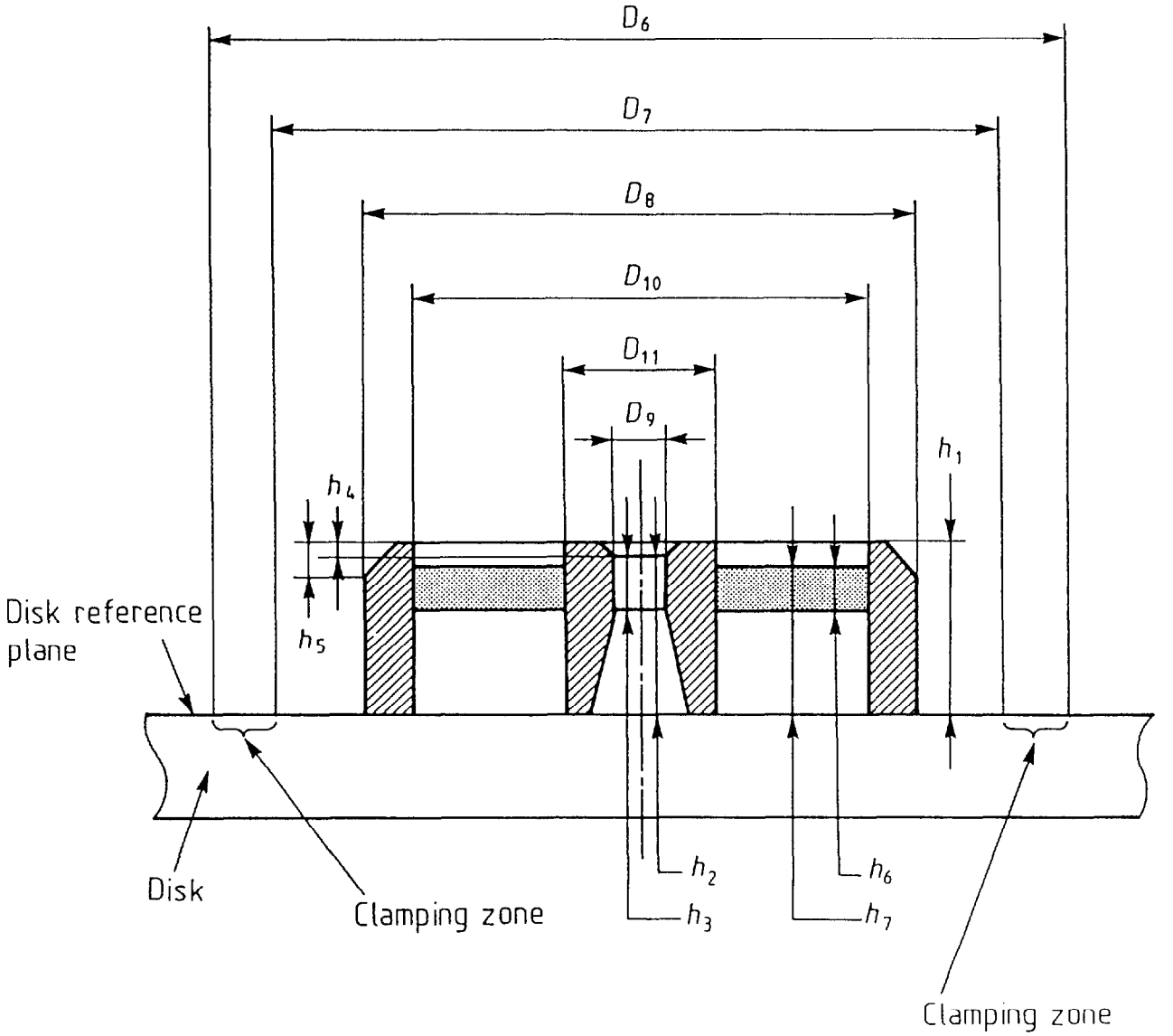

Figure 1 - Hub dimensions

Copyright International Organization for Standardization
Provided by IHS under license with ISO
No reproduction or networking permitted without license from IHS
Not for Resale

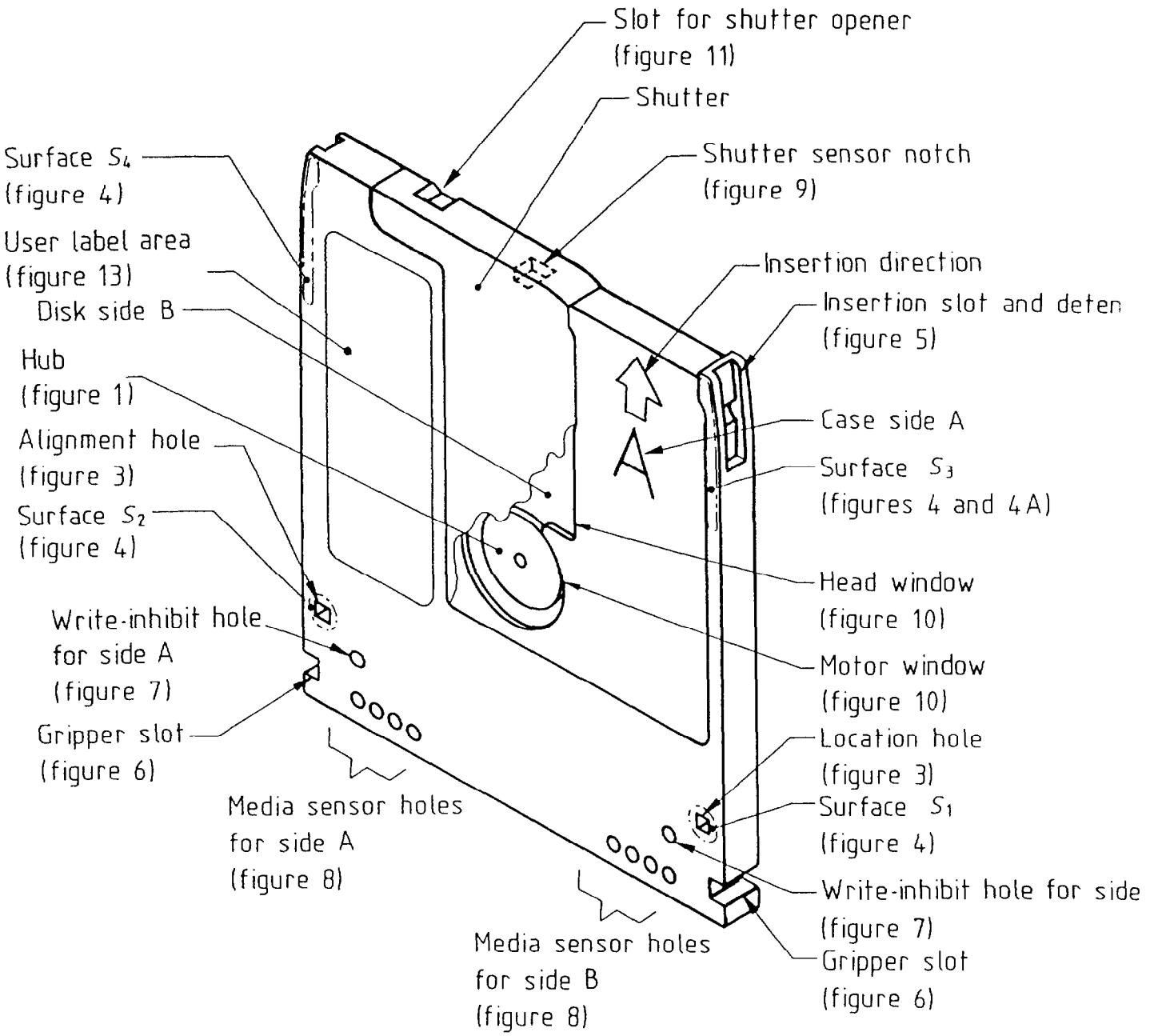

Figure 2 - Perspective view of the case

Copyright International Organization for Standardization
Provided by IHS under license with ISO
No reproduction or networking permitted without license from IHS
Not for Resale

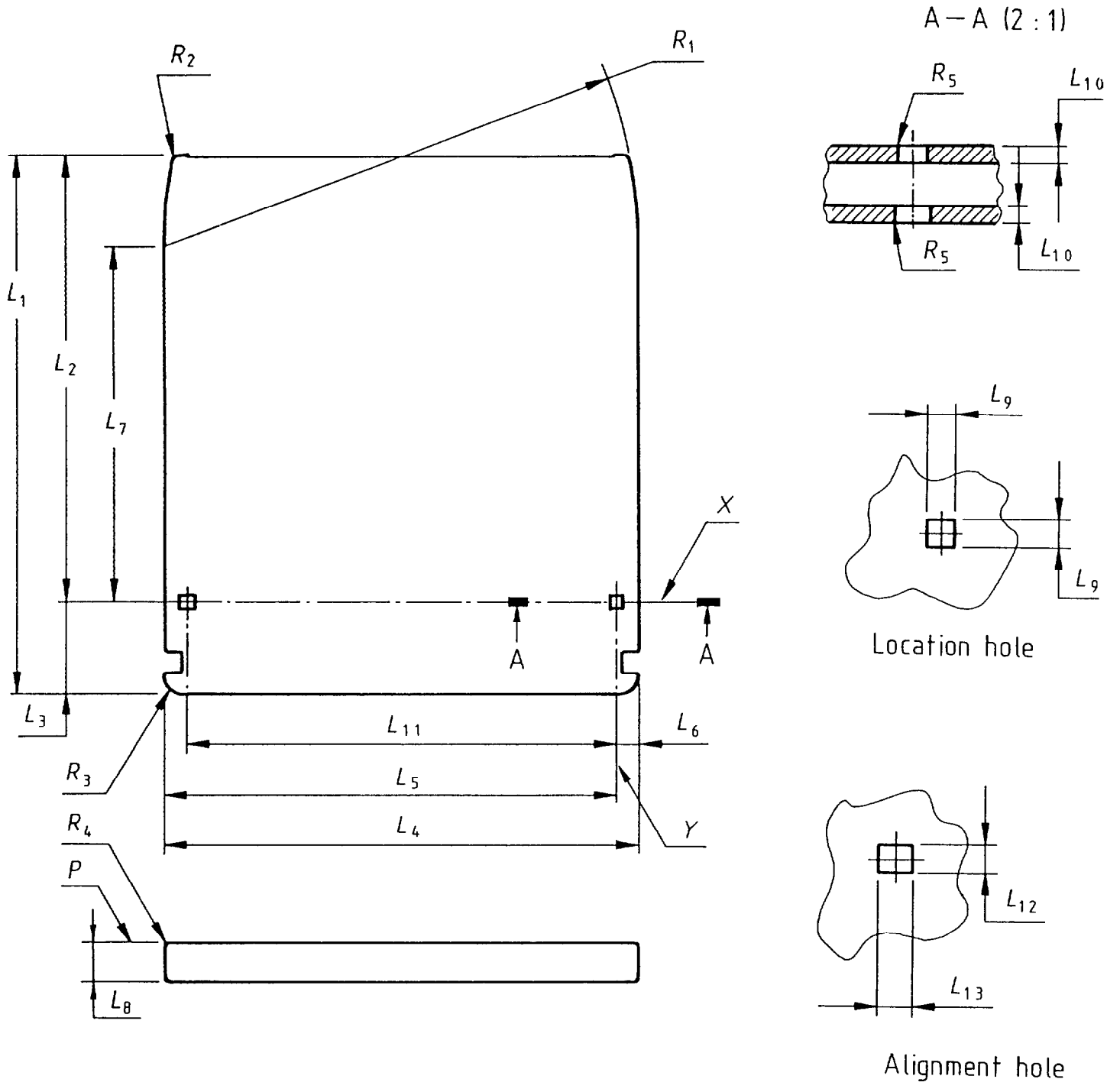

Figure 3 - Overall dimensions and reference axes

Copyright International Organization for Standardization
Provided by IHS under license with ISO
No reproduction or networking permitted without license from IHS
Not for Resale

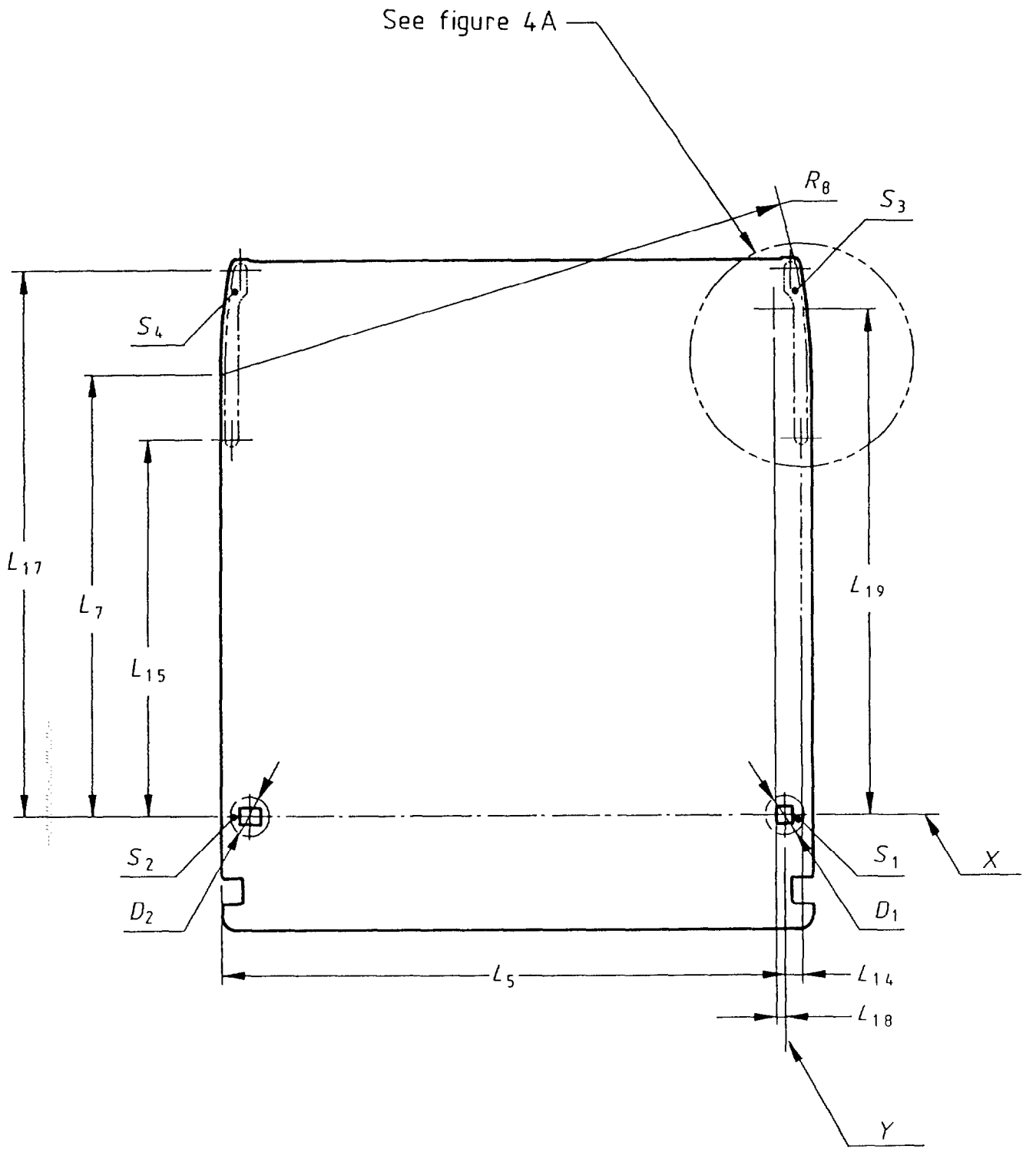

Figure 4 - Surfaces S1, S2, S3 and S4

Copyright International Organization for Standardization
Provided by IHS under license with ISO
No reproduction or networking permitted without license from IHS
Not for Resale

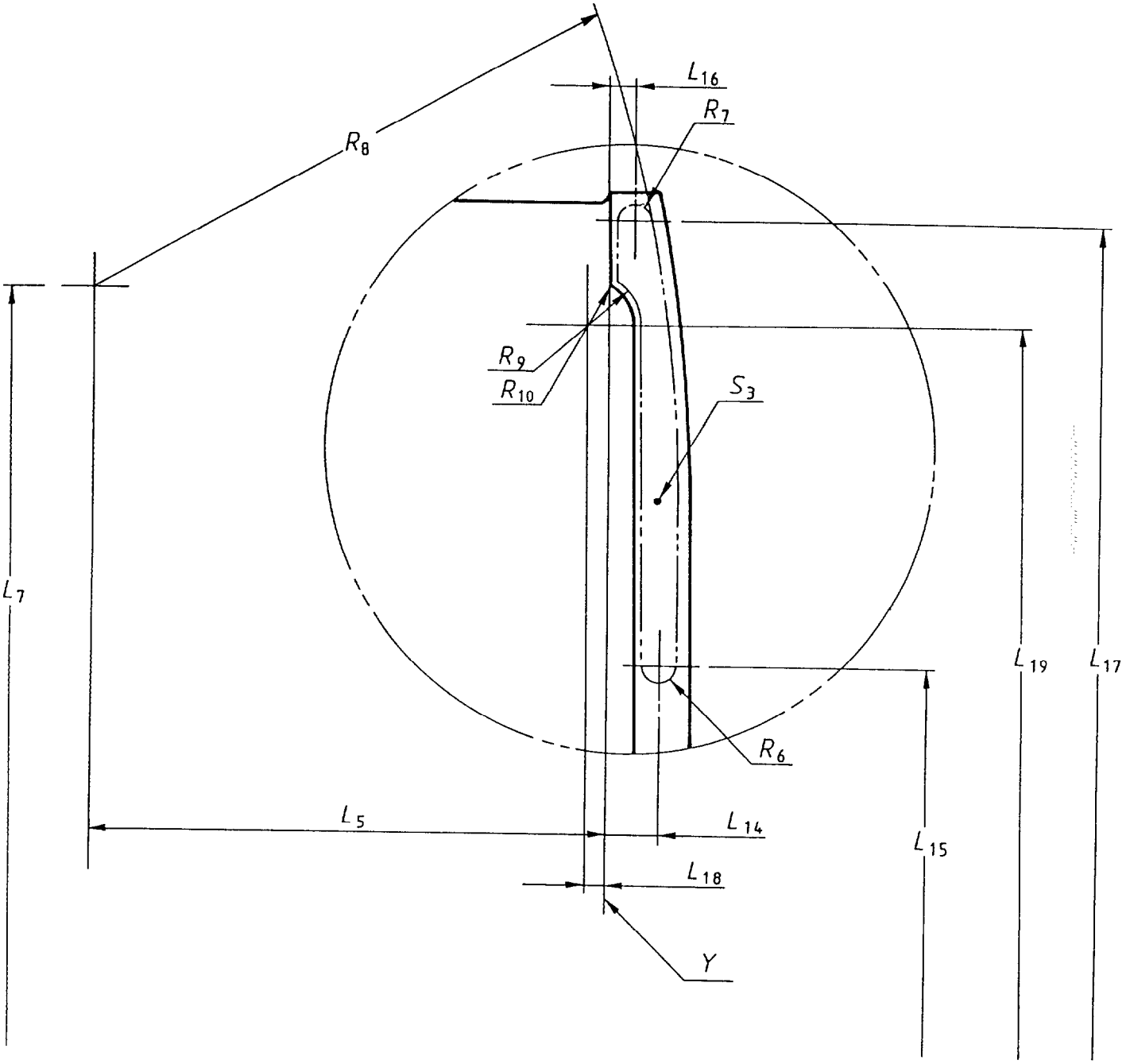

Figure 4a - Enlarged view of surface S3

Copyright International Organization for Standardization
Provided by IHS under license with ISO
No reproduction or networking permitted without license from IHS
Not for Resale

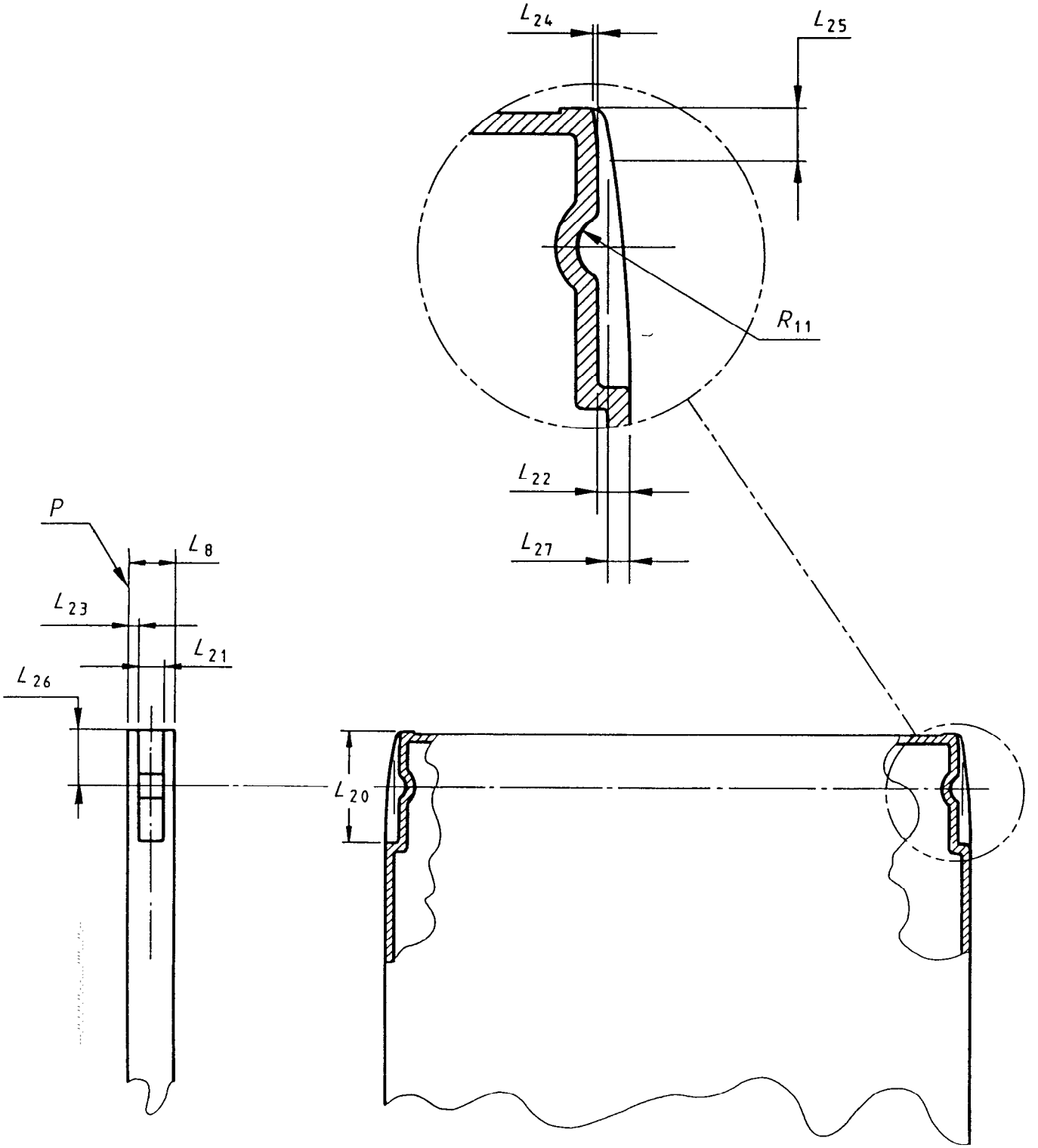

Figure 5 - Insertion slot and detent

Copyright International Organization for Standardization
Provided by IHS under license with ISO
No reproduction or networking permitted without license from IHS
Not for Resale

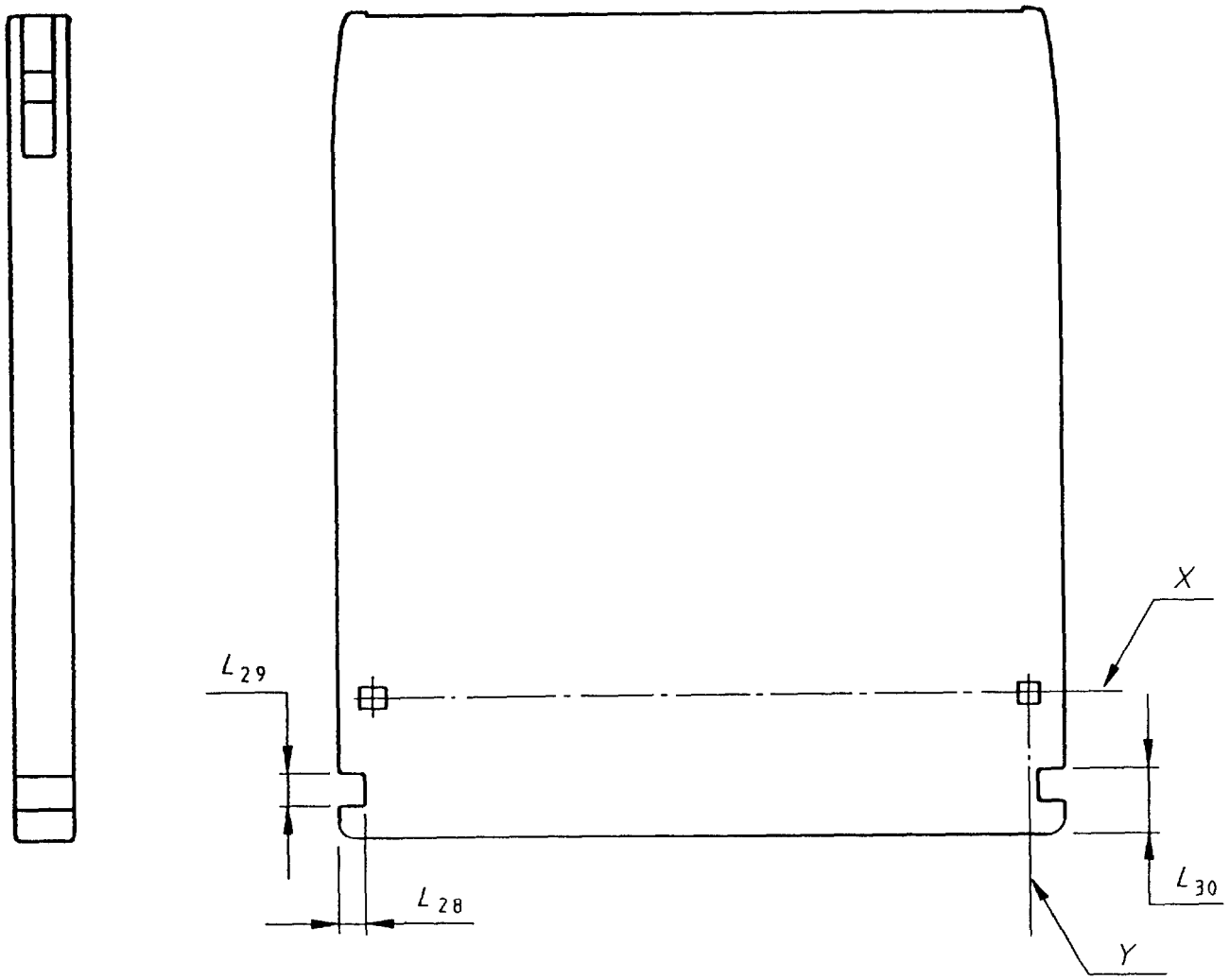

Figure 6 - Gripper slots

Copyright International Organization for Standardization
Provided by IHS under license with ISO
No reproduction or networking permitted without license from IHS
Not for Resale

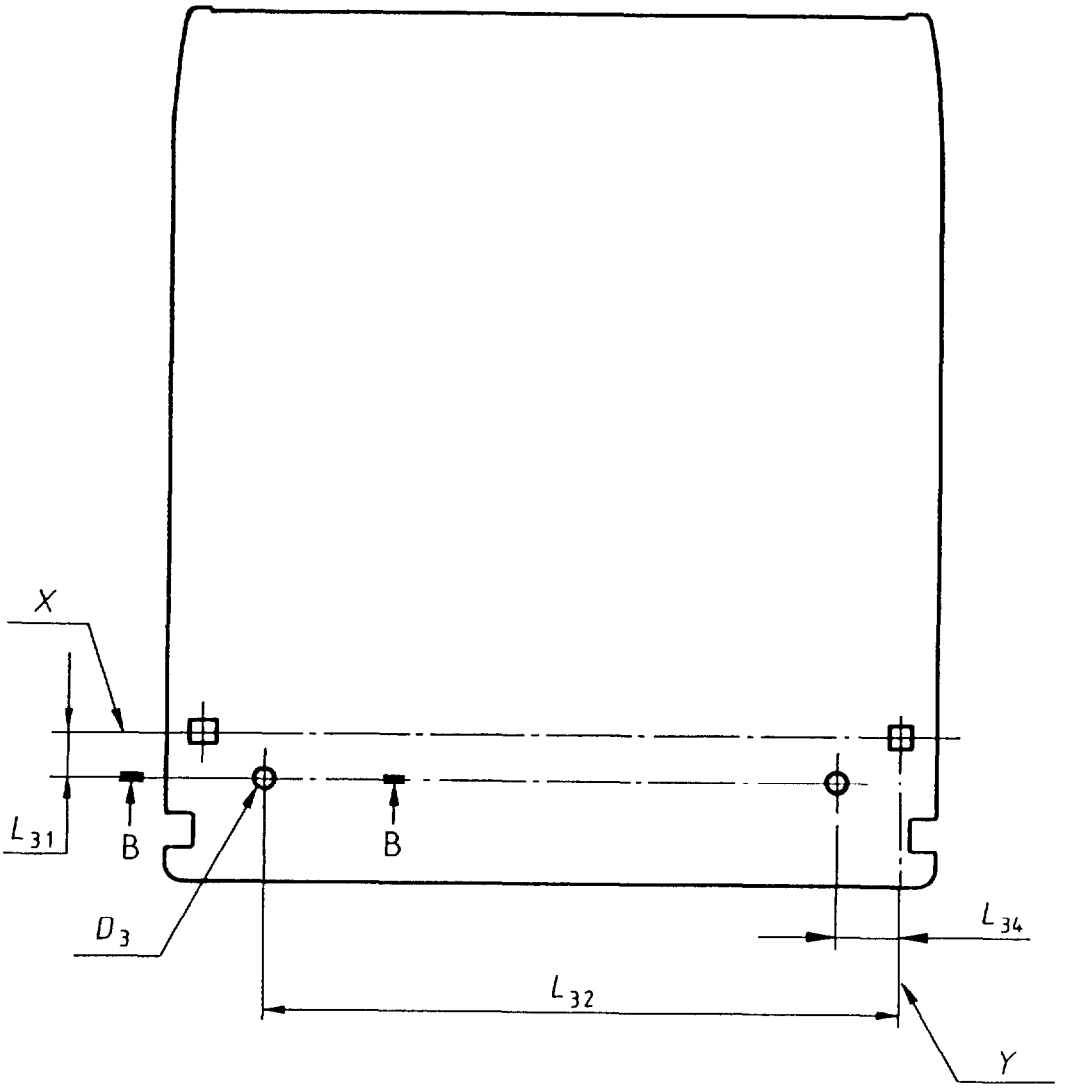

Section B—B

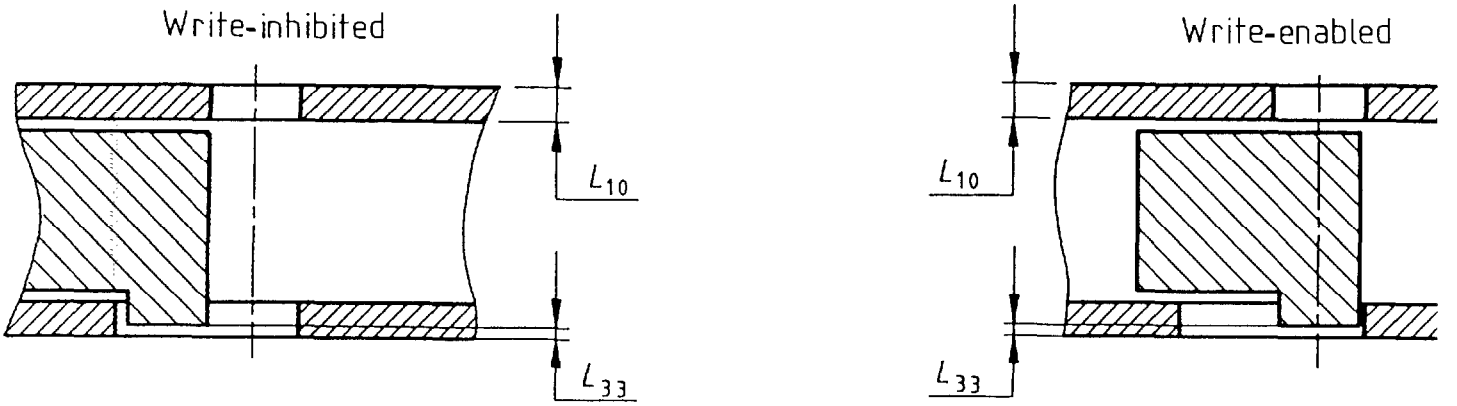

Figure 7 - Write-inhibit holes

Copyright International Organization for Standardization
Provided by IHS under license with ISO
No reproduction or networking permitted without license from IHS
Not for Resale

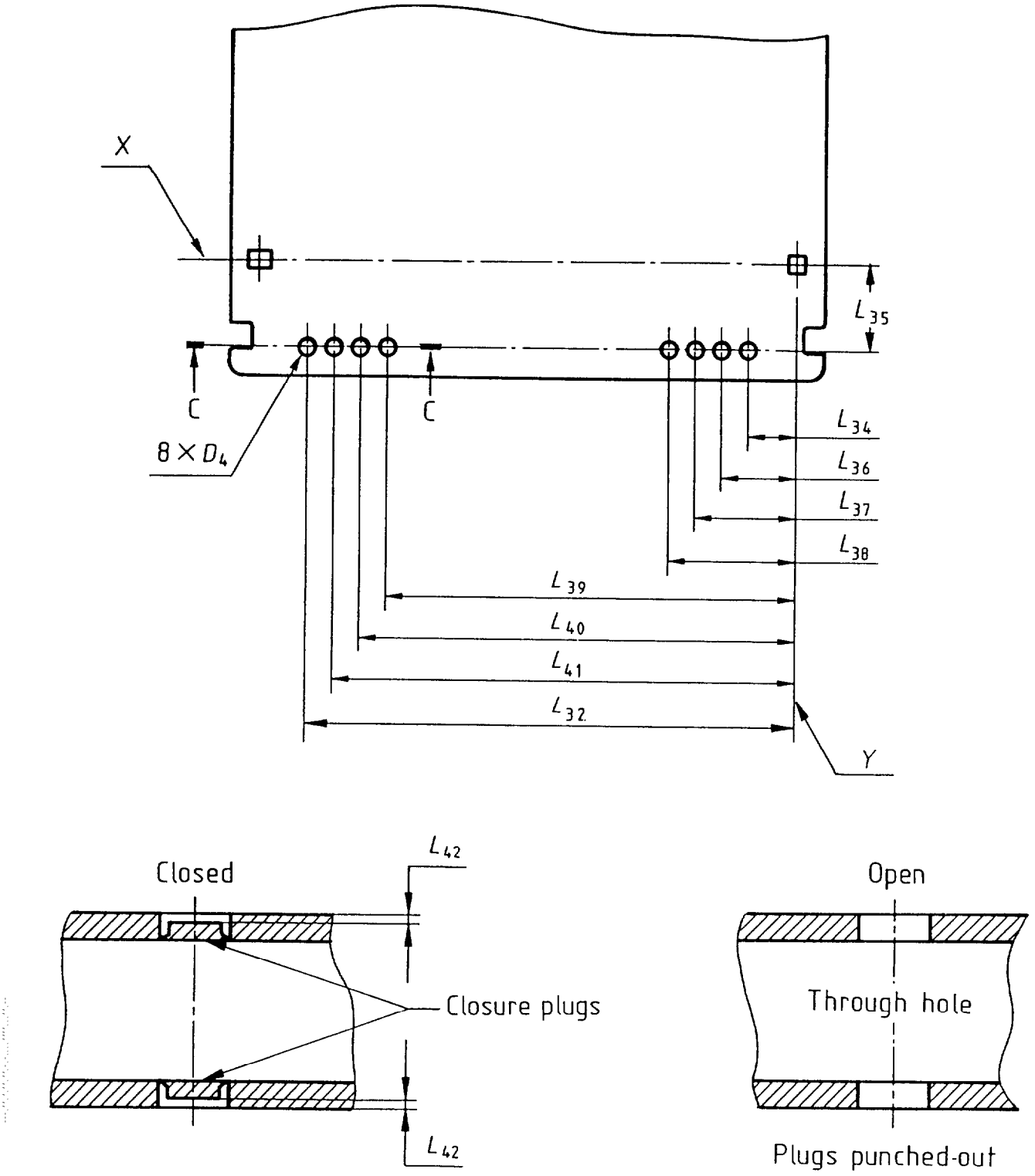

Figure 8 - Media IS sensor holes

Copyright International Organization for Standardization
Provided by IHS under license with ISO
No reproduction or networking permitted without license from IHS
Not for Resale

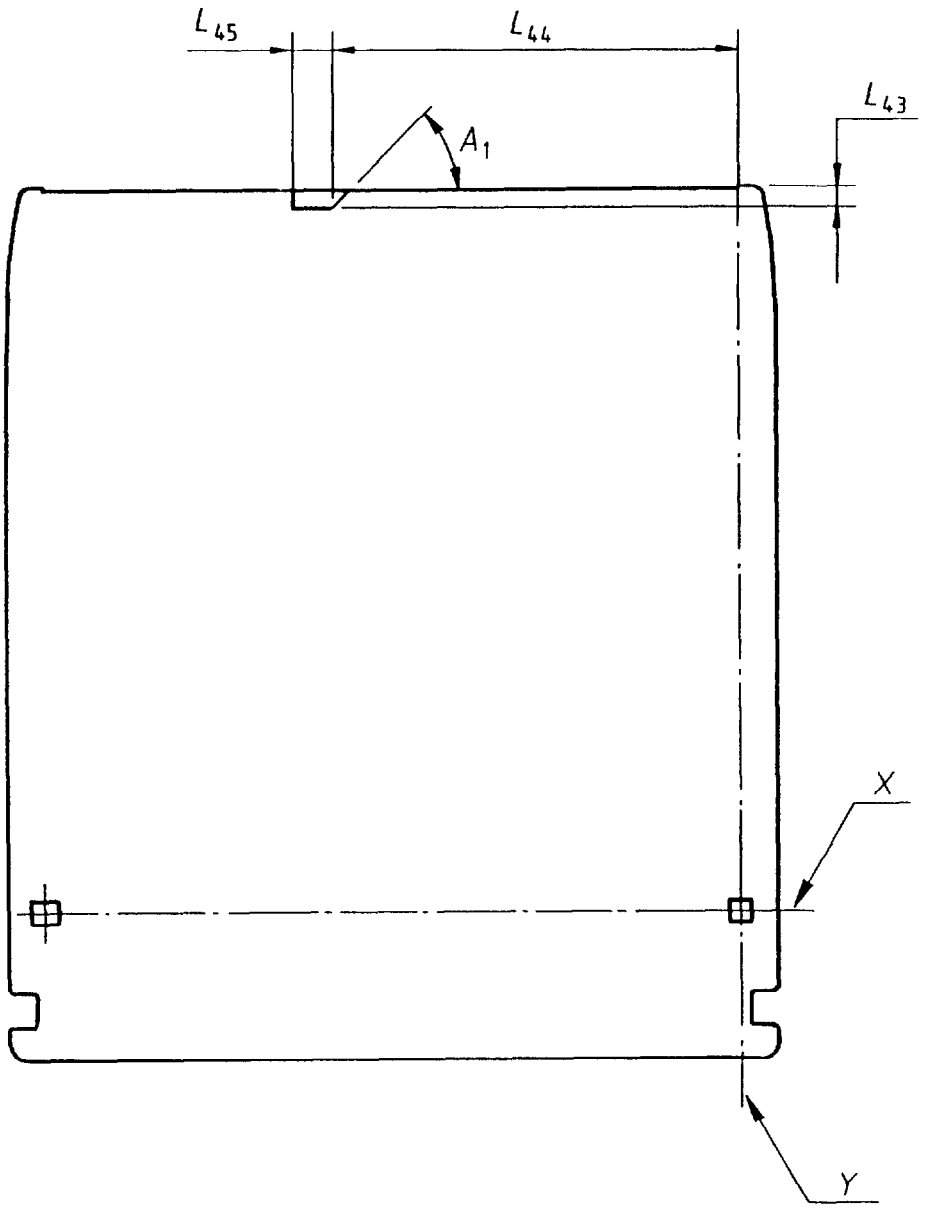

Figure 9 - Shutter sensor notch

Copyright International Organization for Standardization
Provided by IHS under license with ISO
No reproduction or networking permitted without license from IHS
Not for Resale

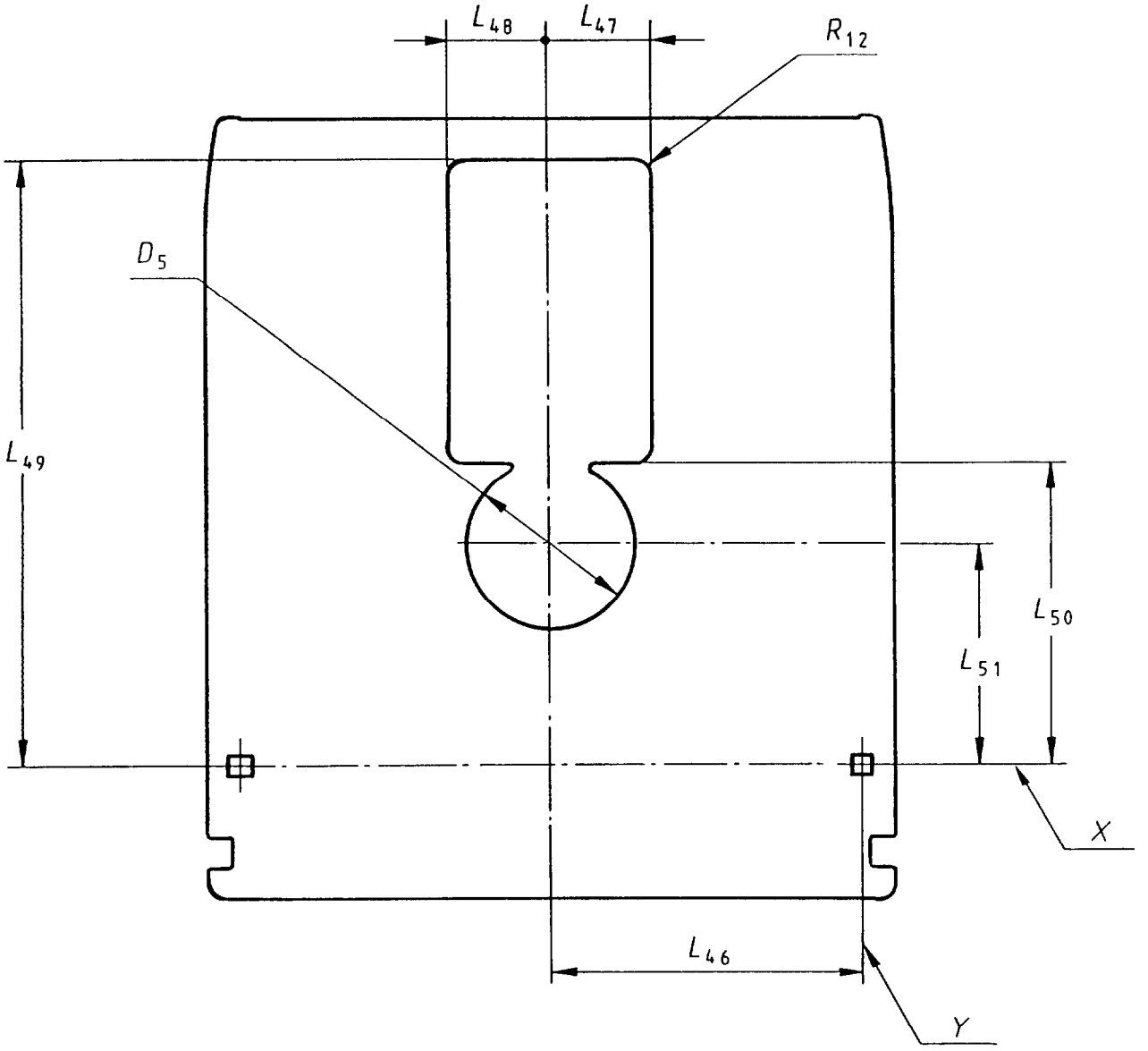

Figure 10 - Head and motor window

Copyright International Organization for Standardization
Provided by IHS under license with ISO
No reproduction or networking permitted without license from IHS
Not for Resale

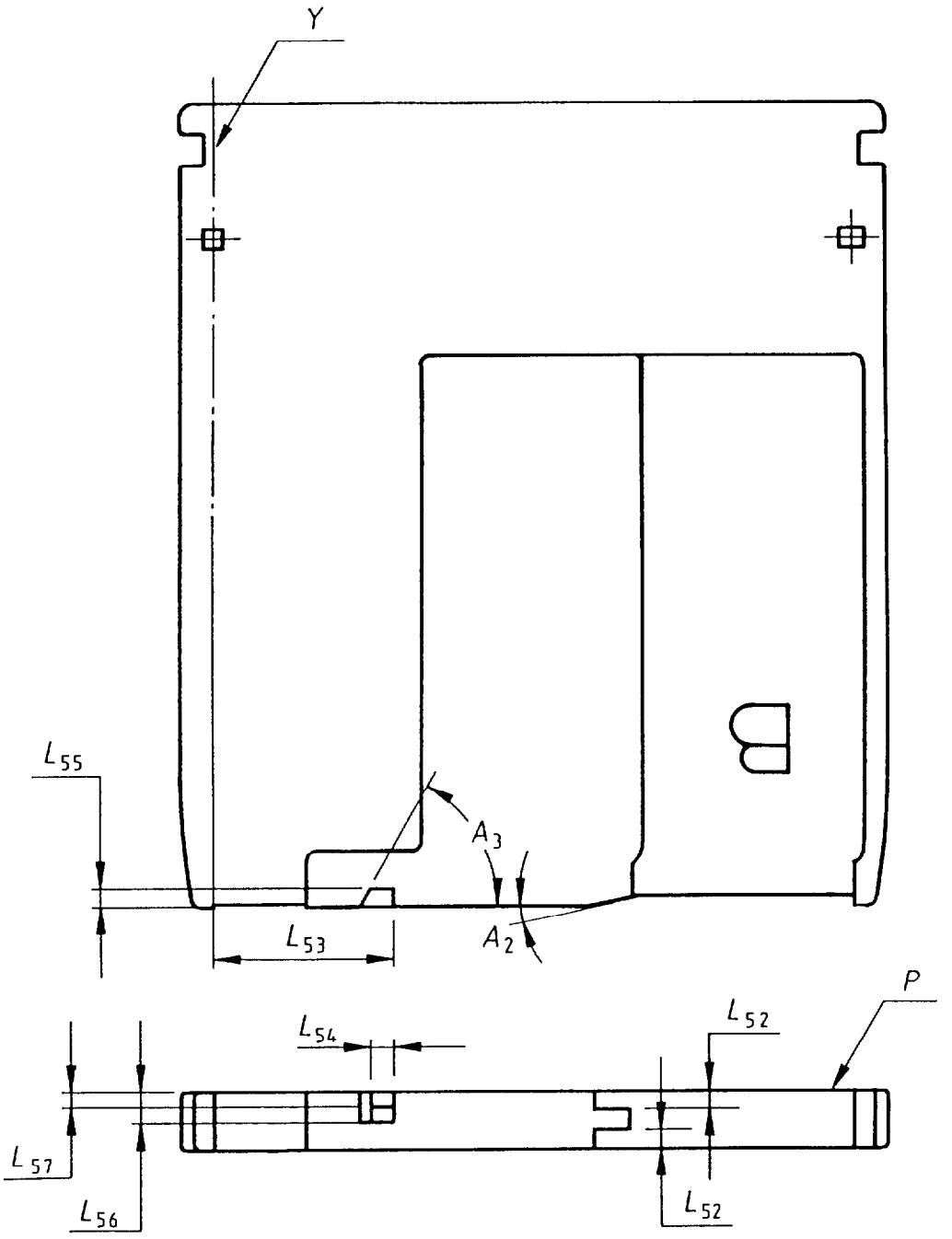

Figure 11 - Shutter opening feature

Copyright International Organization for Standardization
Provided by IHS under license with ISO
No reproduction or networking permitted without license from IHS
Not for Resale

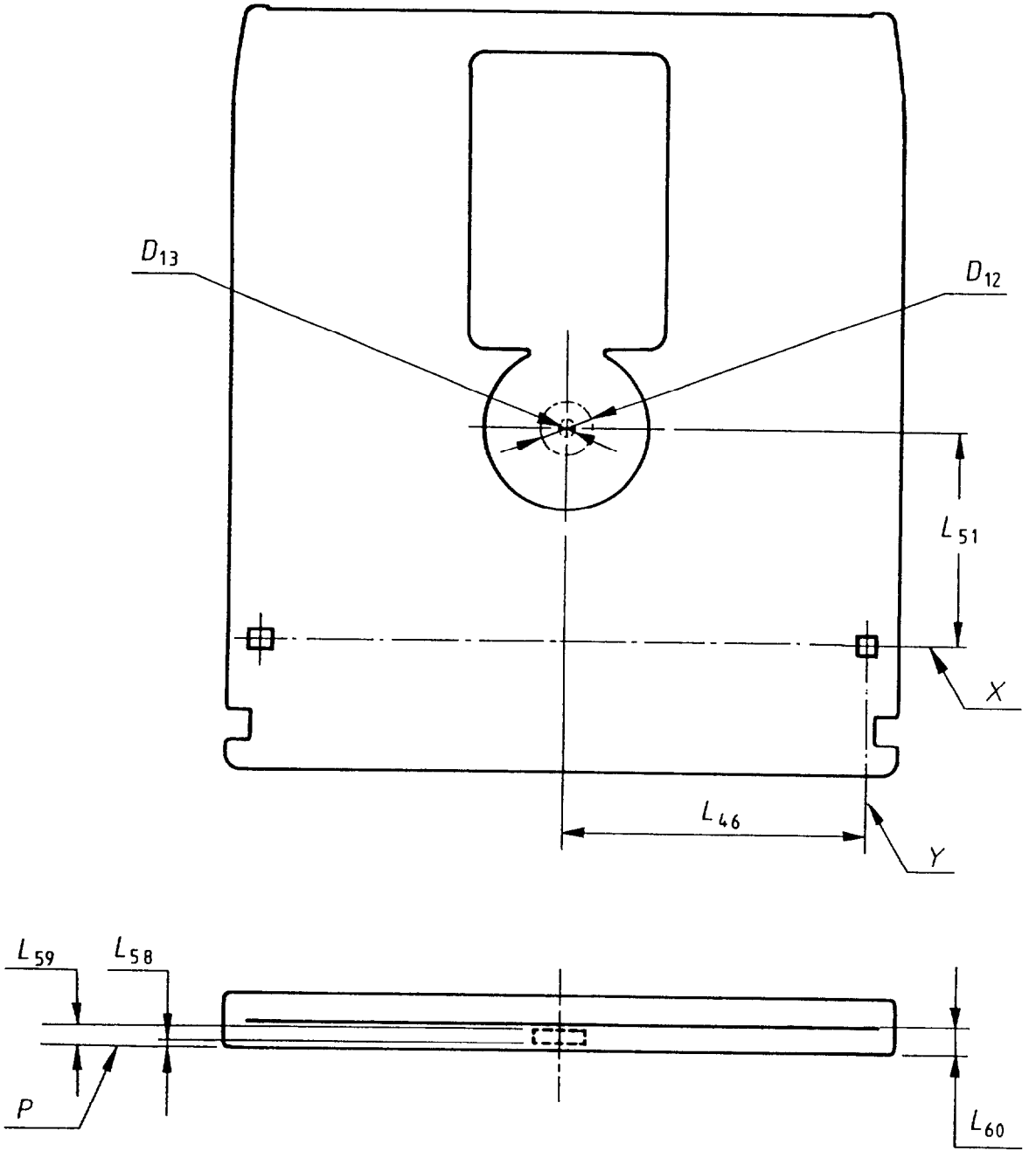

Figure 12 - Capture cylinder

Copyright International Organization for Standardization
Provided by IHS under license with ISO
No reproduction or networking permitted without license from IHS
Not for Resale

Figure 13a -
User label area on side A

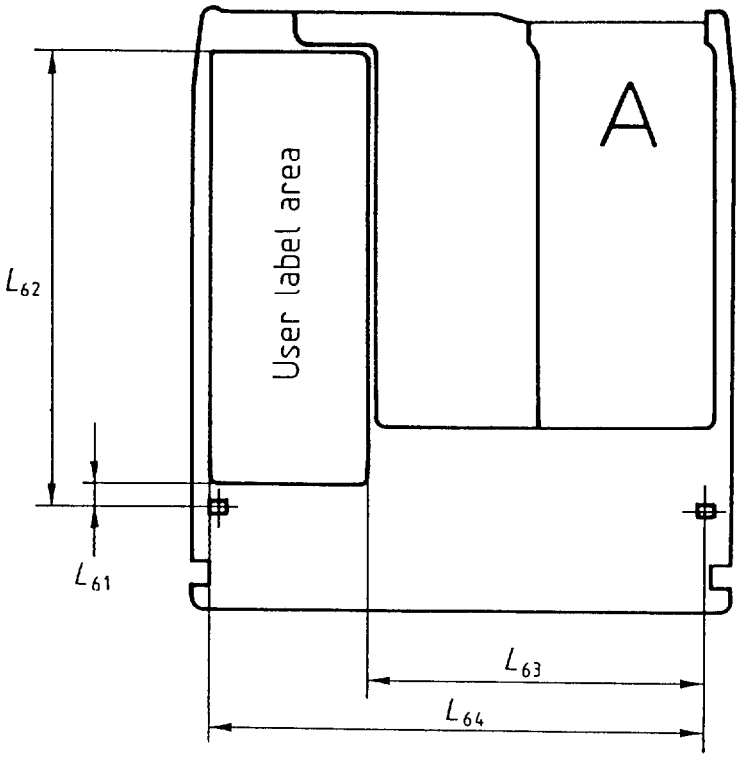

Figure 13b -
User label area on bottom surface

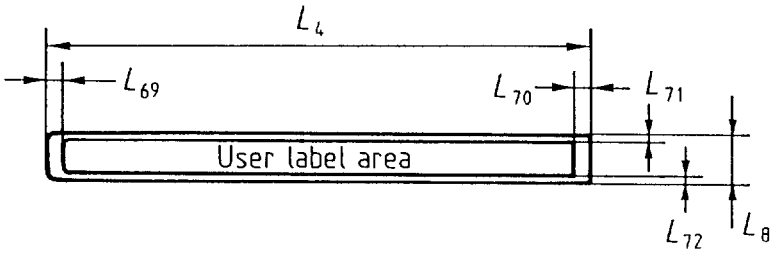

Figure 13c -
User label area on side B

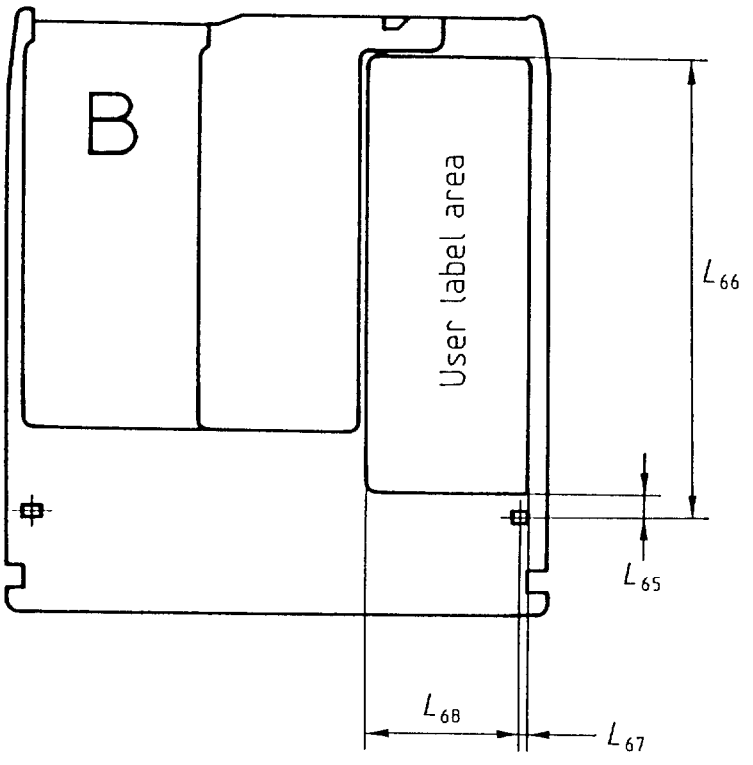

Figure 13 - User label area

Copyright International Organization for Standardization
Provided by IHS under license with ISO
No reproduction or networking permitted without license from IHS
Not for Resale

12 Characteristics of the substrate

12.1 Index of refraction

Within the formatted zone the index of refraction shall be within the range from 1,46 to 1,60.

12.2 Thickness

The thickness of the substrate within the formatted zone shall be

$$0{,}5079 \ \frac{n^3}{n^2-1} \ \times \ \frac{n^2 + 0{,}2586}{n^2 + 0{,}5770} \ \text{mm} \ \pm 0{,}050 \ \text{mm}$$

where n is the index of refraction.

12.3 Birefringence

The laser feedback ratio B, as defined in Annex C, is mainly caused by the birefringence of the substrate and incurred by the optical beam on a double passage through this substrate.

When measured as described in Annex C, and throughout the range of the operating environment, it shall not exceed

0,10 in the User Zone

0,15 in the Lead-In and Lead-Out Zones.

13 Characteristics of the recording layer

Unless otherwise stated, all tests in this clause shall be carried out under the conditions of 13.1.1, and 13.1.2 and/or 13.1.3 as appropriate.

13.1 Test conditions

13.1.1 General

a)	Environment	: Test environment
b)	Wavelength (λ)	: 825 nm $^{+\ 15\ \text{nm}}_{-\ 10\ \text{nm}}$
c)	Polarization of the light	: circular
d)	Wavelength (λ) divided by the numerical aperture (NA) of the objective lens	λ/NA = 1,59 µm ± 0,04 µm
e)	Filling of the lens aperture (D/W) where D is the diameter of the lens aperture and W is the $1/e^2$ beam diameter of the Gaussian beam	: 1,0 max.
f)	Variance of the wavefront of the optical beam at the recording layer	: $\lambda^2/180$ max.
g)	Rotational frequency of the disk	: 30,0 Hz ± 0,3 Hz
h)	Direction of rotation of the disk	: Counter-clockwise when viewed from the objective lens.

Copyright International Organization for Standardization
Provided by IHS under license with ISO
No reproduction or networking permitted without license from IHS
Not for Resale

13.1.2 Read conditions

Marks on the disk are read from the disk with a constant optical power. The read power is the optical power incident at the entrance surface used when reading, and is specified as follows for the stated zones:

a) **PEP Zone**

The read power shall not exceed 0,5 mW

b) **SFP Zone**

The read power shall not exceed the value given in byte 6 of the PEP Zone (4.4.3.1.4 of ISO/IEC 9171-2).

c) **User Zone**

The read power shall not exceed the value given in byte 21 of the SFP Zone (4.5.2 of ISO/IEC 9171-2).

13.1.3 Write conditions

Marks are written on to the disk by pulses of optical power superimposed upon the read power.

The pulse shape shall be as specified in Annex D.

The write power is the optical power incident at the entrance surface, used when writing in the user zone.

Testing shall be carried out at either

- a constant pulse width and a write power appropriate to the radius, as given in bytes 22 to 24, or 25 to 27 of the SFP Zone (4.5.2 of ISO/IEC 9171-2), or
- a constant write power given in byte 31 and a pulse width appropriate to the radius, as given in bytes 32 - 34 of the SFP Zone (4.5.2 of ISO/IEC 9171-2).

For radii other than 30 mm, 45 mm or 60 mm the values shall be linearly interpolated. The actual power and pulse width used shall be within ± 5% of those selected. The required power shall never exceed

$$125 \left(\frac{1}{T_p} + \frac{1}{\sqrt{T_p}} \right) \text{mW}$$

where the pulse width T_p is expressed in ns and is larger than 10 ns.

13.2 Baseline reflectance

13.2.1 General

The baseline reflectance R is the value of the reflectance of an unrecorded, ungrooved area of the disk, measured through the substrate, and does not include the reflectance of the entrance surface.

The value of R shall lie within the range from 0,10 to 0,90.

A coarse range indication is given by the media sensor hole No. 1 (8.13).

- high reflectance : 0,27 to 0,90
- low reflectance : 0,10 to 0,34

The nominal value of R for the disk is specified:

- in the PEP Zone for λ = 825 nm (4.4.3.1.4, byte 3 of ISO/IEC 9171-2), and

Copyright International Organization for Standardization
Provided by IHS under license with ISO
No reproduction or networking permitted without license from IHS
Not for Resale

- in the SFP Zone for λ = 825 nm (4.5.2 of ISO/IEC 9171-2).

13.2.2 Actual value

The actual value R_m of the baseline reflectance shall be that measured under the conditions a) to f) of 13.1.1 and those of 13.1.2.

Measurements shall be made in any unrecorded, ungrooved area, for example

- For Format A : in the ODF (5.2.6 of ISO/IEC 9171-2)
- For Format B : in the Unique Distance Part (6.1.1.4 of ISO/IEC 9171-2) of the servo area, or in the unrecorded track between servo areas.

13.2.3 Requirement

At any point in the formatted zone the value R_m shall be within ± 12% of the value of R.

13.3 Definitions of signals

All signals referred to in the following clauses are currents through the photo diode detector and, hence, are linearly related to the optical power falling on the detector. The signals I_O and I_{Ot} are used as reference signals, and are defined by:

- I_O is the signal obtained from an unrecorded, ungrooved area of the disk with the measured reflectance R_m,
- I_{Ot} is the signal obtained from an unrecorded track, when read on-track. The value of I_{Ot} shall be:

  for Format A: as defined in 5.1.2.1 of ISO/IEC 9171-2
  for Format B: I_O.

- I_u is the average value of the signal to be obtained from data written at a low repetition rate (13.5.1). It is expressed indirectly as the ratio I_u/I_{Ot}, the nominal value of which is the value specified in the PEP Zone (4.4.3.1.4, byte 5 of ISO/IEC 9171-2) and in the SFP Zone (4.5.2, byte 5 of ISO/IEC 9171-2) and used for checking the levels of user-recorded data.

The signal from a mark is defined as the negative or positive change in signal level when a mark passes the beam (see figure 14).

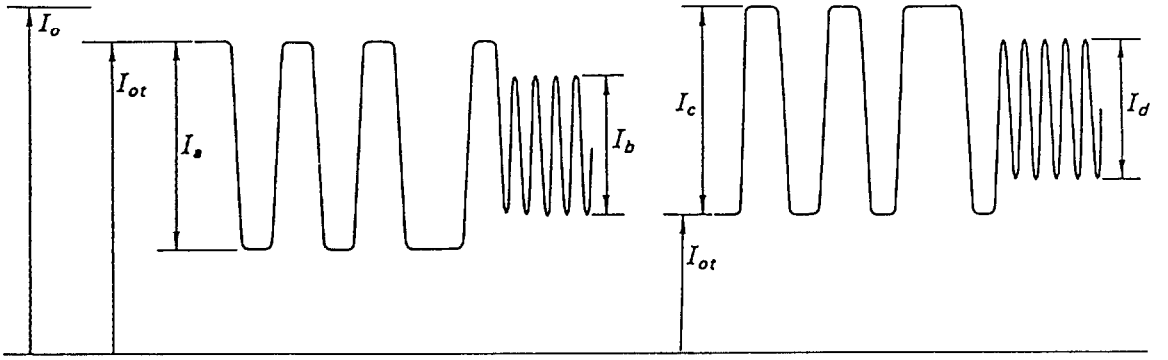

Figure 14 - Illustration of signals

In this figure:

Copyright International Organization for Standardization
Provided by IHS under license with ISO
No reproduction or networking permitted without license from IHS
Not for Resale

I_a is a negative signal from marks with a low repetition rate,
I_b is a negative signal from marks with a high repetition rate,
I_c is a positive signal from marks with a low repetition rate,
I_d is a positive signal from marks with a high repetition rate.

13.4 Prerecorded marks

The properties for prerecorded marks differ between Format A and Format B; the requirements are given in 5.1.2 and 6.1.2, respectively of ISO/IEC 9171-2.

The signal I_p obtained from prerecorded marks with a local repetition rate of less than 1,4 MHz shall satisfy

$$0{,}40 < \frac{|I_p|}{I_O} < 1{,}00 \quad \text{and}$$

$$\frac{I_p\ (\max) - I_p\ (\min)}{I_O} < 0{,}20 \quad \text{over any track}$$

The sign of I_p is given in byte 4 of the PEP Zone (4.4.3.1.4 of ISO/IEC 9171-2). For Format A the requirements for I_p do not apply for the Sector Mark.

13.5 User-written data

13.5.1 Signal I_L

I_L is the signal obtained from marks written under the conditions given in 13.1.3 and at a local repetition rate of less than 1,4 MHz, and read under the condition specified in 13.1.2 c).

$|I_L|/I_{Ot}$ shall be $\geq 0{,}8 \times |I_u|/I_{Ot}$

13.5.2 Signal I_H

I_H is the signal level obtained from marks written under any of the conditions given in 12.1.3 and at a local repetition rate of 3,7 MHz ± 0,1 MHz, and read under the condition specified in 13.1.2 c).

I_H/I_L shall be $\geq 0{,}4$ within any sector.

13.5.3 Narrow-band signal-to-noise ratio (figure 15)

Write a track in the User Zone under the conditions given in 13.1.3 and at a frequency f_0 of 3,7 MHz ± 0,1 MHz. Read under the condition specified in 13.1.2 using a spectrum analyzer with a centre frequency f_0 and a bandwidth of 30 kHz. Measure the amplitudes of the signal and the noise at f_0.

The narrow-band signal-to-noise ratio expressed in dB is:

$$20 \log_{10} \left(\frac{\text{signal level}}{\text{noise level}} \right)$$

This ratio shall be greater than 45 dB for the Data fields of all tracks in the User Zone.

NOTE — It is permitted to use a spectrum analyzer with a bandwidth of 3 kHz and to convert the measured value to that for a 30 kHz value.

It is also permitted to read the track and filter out the contributions due to pre-recorded data.

Copyright International Organization for Standardization
Provided by IHS under license with ISO
No reproduction or networking permitted without license from IHS
Not for Resale

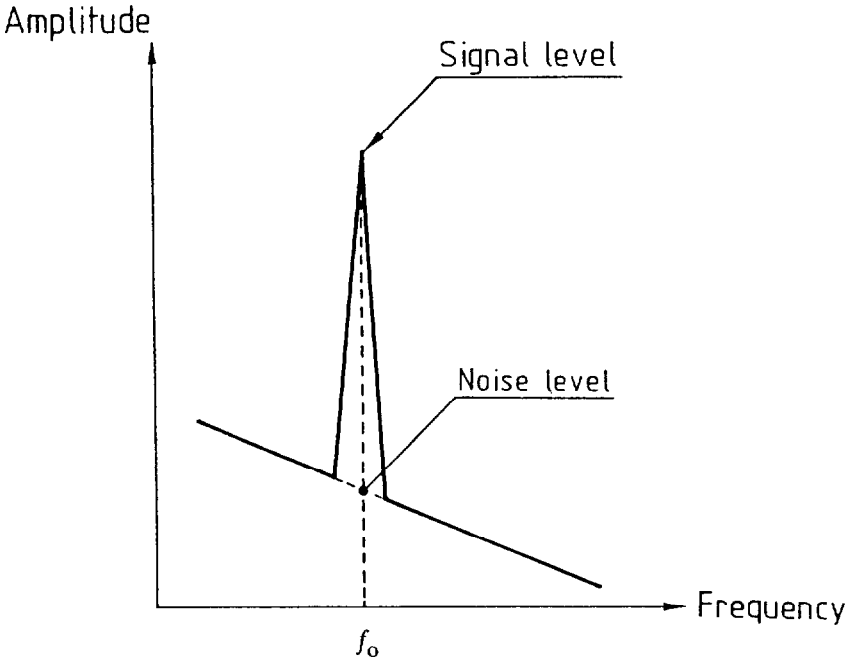

Figure 15 - Amplitude versus frequency

13.5.4 Cross-talk

The test shall be carried out on any group of five adjacent unrecorded tracks in the User Zone.

Write on the centre track n under the conditions given in 13.5.3. Read tracks (n-1), n and (n + 1) under the conditions specified in 13.1.2 c). The cross-talk ratio from track n to either track (n-1) or track (n + 1) shall be lower than:

- 26 dB for a track pitch of 1,6 μm (4.4.3.1.4, byte 0 of ISO/IEC 9171-2, bit 7 set to ZERO),
- 23 dB for a track pitch of 1,5 μm (4.4.3.1.4, byte 0 of ISO/IEC 9171-2, bit 7 set to ONE).

Copyright International Organization for Standardization
Provided by IHS under license with ISO
No reproduction or networking permitted without license from IHS
Not for Resale

Annex A
(informative)

Office environment

Due to their construction and mode of operation optical disk cartridges have considerable resistance to the effects of dust particles around and inside the disk drive. Consequently it is not generally necessary to take special precautions to maintain a sufficiently low concentration of dust particles.

Operation in heavy concentrations of dust should be avoided, e.g. in a machine shop or on a building site.

Office environment implies an environment in which personnel may spend a full working day without protection and without suffering temporary or permanent discomfort.

Copyright International Organization for Standardization
Provided by IHS under license with ISO
No reproduction or networking permitted without license from IHS
Not for Resale

Annex B
(informative)

Transportation

B.1 As transportation occurs under a wide range of temperature and humidity variations, for differing periods, by many methods of transport and in all parts of the world it is not possible to specify conditions for transportation or for packaging.

B.2 The form of packaging should be agreed between sender and recipient or, in the absence of such agreement, is the responsibility of the sender. It should take account of the following hazards.

B.2.1 Temperature and humidity

Insulation and wrapping should be designed to maintain the conditions for storage over the estimated period of transportation.

B.2.2 Impact loads and vibration

a) Avoid mechanical loads that would distort the shape of the cartridge.

b) Avoid dropping the cartridge.

c) Cartridges should be packed in a rigid box containing adequate shock-absorbent material.

d) The final box should have a clean interior and a construction that provides sealing to prevent the ingress of dirt and moisture.

Copyright International Organization for Standardization
Provided by IHS under license with ISO
No reproduction or networking permitted without license from IHS
Not for Resale

Annex C
(normative)

Measurement of birefringence

C.1 Optical conditions

Optical conditions shall be as follows:

- wavelength: $\lambda = 825\ \text{nm}\ {}^{+\ 15\ \text{nm}}_{-\ 10\ \text{nm}}$
- wavelength divided by numerical aperture: $\lambda/\text{NA} = 1{,}59\ \mu\text{m} \pm 0{,}04\ \mu\text{m}$
- filling of the lens aperture: $D/W = 0{,}9 \pm 0{,}1$
- polarization of the light: circular.

NOTE — The only functional quantity to specify birefringence of a write-once disk is the amount of light returning from the disk with wrong polarization, called B in this Annex.

C.2 Measuring set-ups

There are two possible set-ups for measurement of birefringence. In either case, the design of the optical system shall be such that the detected light reflected from the entrance surface is minimised, so as not to influence the accuracy of measurement.

C.2.1 First Set-up

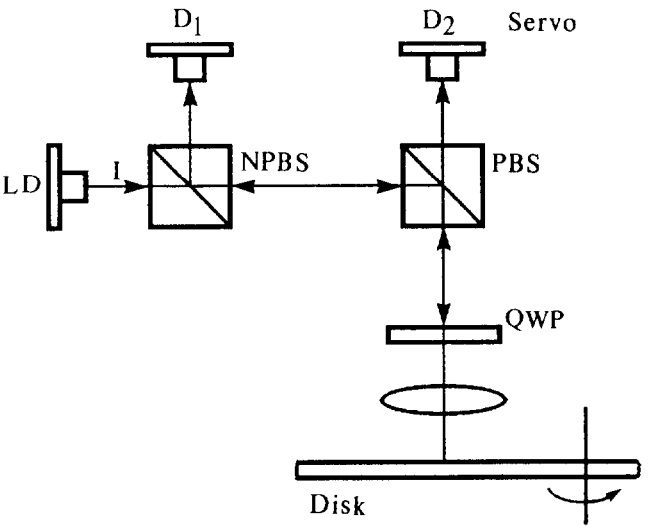

Figure C.1 - A set-up for measurement of B

Copyright International Organization for Standardization
Provided by IHS under license with ISO
No reproduction or networking permitted without license from IHS
Not for Resale

The light power which is emitted from the laser diode (LD) is I. After passing through a non-polarizing beam splitter (NPBS) and a polarizing beam splitter (PBS), the light is converted to right circularly polarized light by a quarter-wave plate (QWP).

Approximately (1/2) I reaches the disk. If the reflectivity of the disk is R, (1/2) RI is reflected back. Due to the birefringence of the disk, the reflected light is composed of a fraction (1 - B) of left circularly polarized light and a fraction B of right-handed circularly polarized light. Then, (1/2) RI (1 - B) arrives at detector D_2 and (1/4) RIB at D_1. The conversion factor from intensity to current is given by C_1 and C_2 for diodes D_1 and D_2 respectively.

The value of B can be estimated from the following equation.

$$\frac{D_1}{D_1 + D_2} = \frac{(1/4)\, C_1 B}{(1/4)\, C_1 B + (1/2)\, C_2 (1 - B)} = B$$

The last equality holds when $C_1 = 2\, C_2$. Any losses in the optical paths can be compensated for by fine-tuning the ratio C_1/C_2. The optical components shall be aligned such that in the absence of birefringence, D_2 is at a maximum value and D_1 as close to zero as possible.

C.2.2 Second Set-up

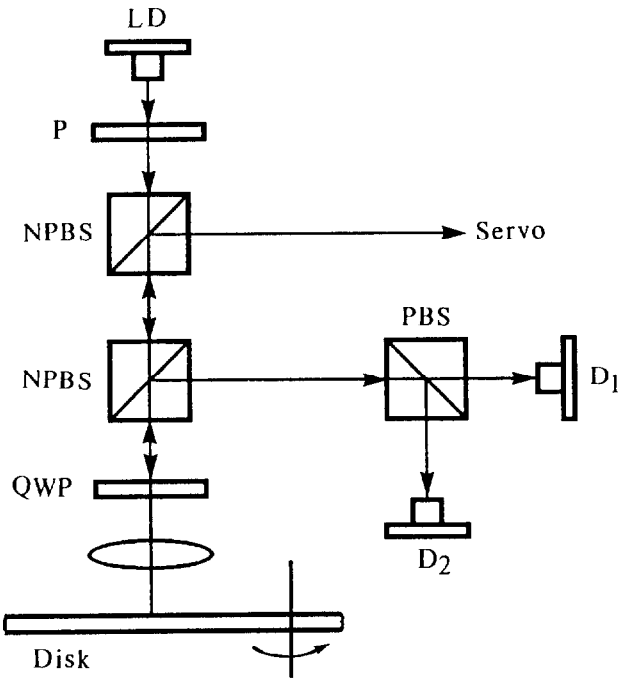

Figure C.2 - A set-up for measurement of B

The components shall be aligned in such a way that, in the absence of birefringence, D_2 is at a maximum value and D_1 is at a minimum value. P is a linear polarizer. The amount of light reaching D_1 in the presence of birefringence is (1/8) RIB and that of D_2 is (1/8) RI (1 - B), assuming all NPBSs to be fifty-fifty splitters. The conversion factors are set to be $C_1 = C_2$.

The value of B is estimated from the following equation.

Copyright International Organization for Standardization
Provided by IHS under license with ISO
No reproduction or networking permitted without license from IHS
Not for Resale

$$\frac{D_1}{D_1 + D_2} = B$$

C.2.3 Calibration method

There are two methods of calibration. Insert a sample with a known amount of birefringence in a parallel beam, and adjust C_1 and C_2 to give B the required value.

In the second method, such an amount of birefringence is inserted, that D_2 falls to half its value of no-birefringence case. C_1 and C_2 should be adjusted to make B = 0,5.

Copyright International Organization for Standardization
Provided by IHS under license with ISO
No reproduction or networking permitted without license from IHS
Not for Resale

Annex D
(normative)

Definition of write and erase pulse width

The rise and fall times, T_r and T_f, shall each be less than 10 ns, when the write pulse width T_p exceeds 50 ns. When T_p is less than 50 ns, T_r and T_f shall each be less than 0,2 T_p ns.

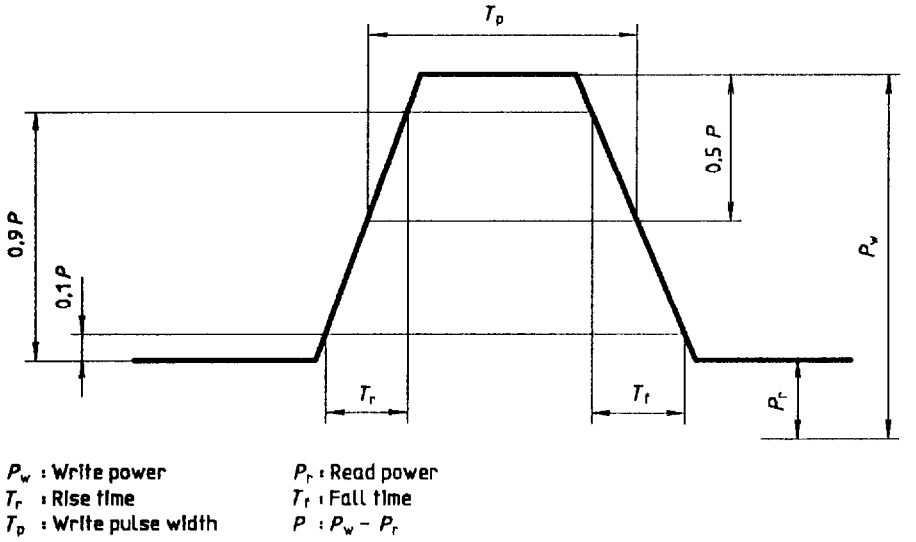

Figure D.1 - Definition of the pulse shape

UDC 681.327.68 : 681.327.28

Descriptors: data processing, information interchange, data storage devices, optical disks, optical disk cartridges, definitions, specifications, dimensions, tests.

Price based on 40 pages

Copyright International Organization for Standardization
Provided by IHS under license with ISO
No reproduction or networking permitted without license from IHS
Not for Resale