INTERNATIONAL STANDARD

ISO/IEC 8877

Second edition
1992-11-15

Information technology — Telecommunications and information exchange between systems — Interface connector and contact assignments for ISDN Basic Access Interface located at reference points S and T

Technologies de l'information — Télécommunications et échange d'informations entre systèmes — Connecteur d'interface et affectation des contacts pour l'interface d'accès de base au RNIS située aux points de référence S et T

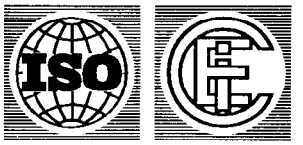

Reference number
ISO/IEC 8877:1992(E)

--`,,```,,,,````-`-`,,`,,`,`,,`---
Copyright International Organization for Standardization
Provided by IHS under license with ISO
No reproduction or networking permitted without license from IHS
Not for Resale

Foreword

ISO (the International Organization for Standardization) and IEC (the International Electrotechnical Commission) form the specialized system for worldwide standardization. National bodies that are members of ISO or IEC participate in the development of International Standards through technical committees established by the respective organization to deal with particular fields of technical activity. ISO and IEC technical committees collaborate in fields of mutual interest. Other international organizations, governmental and non-governmental, in liaison with ISO and IEC, also take part in the work.

In the field of information technology, ISO and IEC have established a joint technical committee, ISO\IEC JTC 1. Draft International Standards adopted by the joint technical committee are circulated to national bodies for voting. Publication as an International Standard requires approval by at least 75% of the national bodies casting a vote.

International Standard ISO/IEC 8877 was prepared by Joint Technical Committee ISO/IEC JTC 1, *Information technology*.

This second edition cancels and replaces the first edition ISO 8877:1987 and ISO 8877:Amd.1:1991.

Annexes A, B, C and D of this International Standard are for information only.

© ISO/IEC 1992
All rights reserved. No part of this publication may be reproduced or utilized in any form or by any means, electronic or mechanical, including photocopying or microfilm, without permission in writing form the publisher.

ISO/IEC Copyright office • Case Postale 56 • CH-1211 Genève 20 • Switzerland

Printed in Switzerland

Copyright International Organization for Standardization
Provided by IHS under license with ISO
No reproduction or networking permitted without license from IHS
Not for Resale

Information technology — Telecommunications and information exchange between systems — Interface connector and contact assignments for ISDN Basic Access Interface located at reference points S and T

1 Scope

This International Standard specifies the 8-pole connector (plug and jack) and the assignments of poles/contacts for use in physical interfaces of Integrated Services Digital Network (ISDN) basic access arrangements. These physical interfaces may be located at reference points S and T between TEs and NTs and between NT1s and NT2s and shall conform to CCITT Recommendation I.430.

This International Standard also specifies the requirements for ISDN basic access cords for use with TEs that conform with Recommendation I.430, where the specification of the TE calls for the use of such a cord.

CCITT Recommendation I.430 requires plugs and jacks on equipment connecting cords and interface cables as shown in figure 2/I.430 of that Recommendation (also see annex A).

For the purpose of this International Standard, when viewed from an NT1, an NT2 may be considered to be a TE.

NOTE – This International Standard specifies connector dimensions but only those to ensure mateability of the plug and jack. Complete detailed specifications of the plugs and jacks and all other dimensions are specified in IEC 603-7 (see annex D)

2 Normative references

The following International Standards and CCITT Recommendations contain certain provisions that, through reference in this text, constitute provisions of this International Standard. At the time of publication, the editions indicated were valid. All International Standards and CCITT Recommendations are subject to revision, and parties to agreements based on this International Standard are encouraged to investigate the possibility of applying the most recent editions of the Standards/Recommendations indicated below. Members of international standards bodies maintain registers of currently valid International Standards and CCITT Recommendations.

CCITT Recommendation I.411:1988, *ISDN user – network interface – Reference configurations*

CCITT Recommendation I.420:1988, *Basic user–network interface*

CCITT Recommendation I.430 :1988, *Basic user–network interface –Layer 1 specification*

NOTE – Section 8.9 of the above Recommendation is reproduced for information as annex C to this International Standard.

3 Definitions

For the purposes of this International Standard the following definitions apply:

3.1 pole: A position for a contact

3.2 contact: The electrical contact element which, for many connections, is referred to as a "pin".

3.3 plug and jack: The male and female connector parts, respectively.

Examples of interface cabling configurations are given in annex A.

4 Connector

Eight-pole connectors are specified for the interconnection of TEs and NTs. One plug and jack pair is used for the interconnection of TEs and NTs. One plug and jack pair is used to connect the TE connecting cord to the interface cable (at interface point I_A in CCITT Recommendation I.430, figure 2/I.430) and a second connector is used (optionally) to connect the NT connecting cord to the interface cable (at interface point I_B in CCITT Recommendation I.430, figure 2/I.430). Interface cabling may have a passive bus or a point-to-point configuration. (Both configurations are illustrated in annex A.)

NOTE The interface cable may be directly connected to an NT or, where the NT is a multi-port device e.g. a PABX, the connection to the NT may involve a large connector which accommodates multiple interfaces

TE and NT connecting cords shall be terminated in plugs. Figure 1 illustrates the cord-terminating plug which provides for 4, 6 or 8 contacts. The number of physical contacts provided or required is dependent

Copyright International Organization for Standardization
Provided by IHS under license with ISO
No reproduction or networking permitted without license from IHS
Not for Resale

upon the use by the associated equipment, TE or NT, of the optional provisions for powering across the interface. The optional powering capabilities are described in CCITT Recommendation I.430 and are summarized here in annex B.

Interface cables shall be terminated in jacks. Figure 2 illustrates the jack which provides 4, 6 or 8 contacts. As with the cord terminating plug, the number of contacts provided or required is dependent upon the provision for the powering options discussed in annex B.

Connector dimensions necessary to assure mating of plugs and jacks are specified in figures 3 through 5. Connectors for use in the applications covered by this International Standard shall conform to the mechanical dimensions specified in these figures and no additional provisions for keying shall be provided.

Figure 3 gives the mechanical specification for mating of the 8-pole plug. Figure 4 gives the plug/jack contact specification for mating. Figure 5 gives the mechanical specification for mating of the 8-pole jack. While physical contacts are indicated for poles 1, 2, 7 and 8 of the plug and jack, contacts corresponding to these numbers are not required in some applications and, in such applications, may be omitted.

5 Assignment of contact numbers

Four contact numbers are assigned for the conductors of the two pairs used for the signal transmission from NT to TE and from TE to NT. Two contacts each are assigned for TRANSMIT and RECEIVE directions at TEs and, correspondingly, to RECEIVE and TRANSMIT directions at NTs. Contacts are also assigned, for sources and sinks at TEs and NTs, individually, for the two optional conductor pairs used for powering TEs from NTs or from other TEs (or NTs from TEs). The provision of twisted pairs for TRANSMIT and RECEIVE circuits and of conductors for powering shall be in conformance with CCITT Recommendation I.430, in all applications. The assignments applicable to the interface on the NT1 side of NT2s shall be the same as for the interface at TEs.

The contact number assignments for plugs and jacks are given in the table. The individual contact, for each conductor pair, is designated "+" or "–". For TRANSMIT and RECEIVE pairs, the contact designated "+" indicates the conductor (lead in Recommendation I.430) of the pair for which the framing pulse should be relatively positive. However, it is unnecessary to distinguish the individual conductors of transmit and receive circuit pairs in interface cables or extension cords in point-to-point interconnections.

For pairs used for powering across the interface (see source 1 or 2 in section 9 of CCITT Recommendation I.430), the contact designated "+" indicates the conductor (lead in CCITT Recommendation I.430) of the pair that carries the relatively positive dc voltage.

Table - Contact assignments for plugs and jacks

Contact number	TE	NT	Polarity
1	Power source 3	Power sink 3	+
2	Power source 3	Power sink 3	–
3	Transmit	Receive	+
4	Receive	Transmit	+
5	Receive	Transmit	–
6	Transmit	Receive	–
7	Power sink 2	Power source 2	–
8	Power sink 2	Power source 2	+

NOTE – For its use in TE-to-TE interconnections, power source/sink 3 shall conform to the requirements, specified in CCITT Recommendation I.430, section 9.2, for power source 2.

6 ISDN basic access TE cord

Unless specified as a 4-wire ISDN basic access TE cord (see clause 7) a cord assembly shall consist of a cord having eight conductors arranged in pairs, fitted with a plug at each end.

The plug at each end of the cord shall be as specified in clause 4 and figures 1, 3 and 4.

Cord assemblies up to 7 m in length shall comply with CCITT Recommendation I.430, section 8.9a).

Cord assemblies over 7 m and up to 10 m in length shall comply with CCITT Recommendation I.430, section 8.9b).

The maximum length of the cord assembly shall be 10 m.

Contact assignments for conductors and pairs shall be as specified in the table in clause 5. Contact numbers apply to both plugs, i.e. contact number 1 shall be connected to contact number 1, etc.

7 4-wire ISDN basic access TE cord

A 4-wire cord assembly shall be as specified in clause 6 but with the following changes:

- the cord shall have four conductors arranged in pairs;

- The plug at each end of the cord shall be an 8-pole

Copyright International Organization for Standardization
Provided by IHS under license with ISO
No reproduction or networking permitted without license from IHS
Not for Resale

plug as specified in clause 4 and figures 1, 3, and 4, but with physical contacts fitted only in contact positions 3, 4, 5, and 6. Contacts shall not be fitted in positions 1, 2, 7 and 8.

– contact assignments for conductors and pairs shall be as specified in the table in clause 5 for contact numbers 3, 4, 5 and 6.

NOTE – Omission of contacts from positions 1, 2, 7 and 8 is to permit visual identification of the 4-wire cord.

Copyright International Organization for Standardization
Provided by IHS under license with ISO
No reproduction or networking permitted without license from IHS
Not for Resale

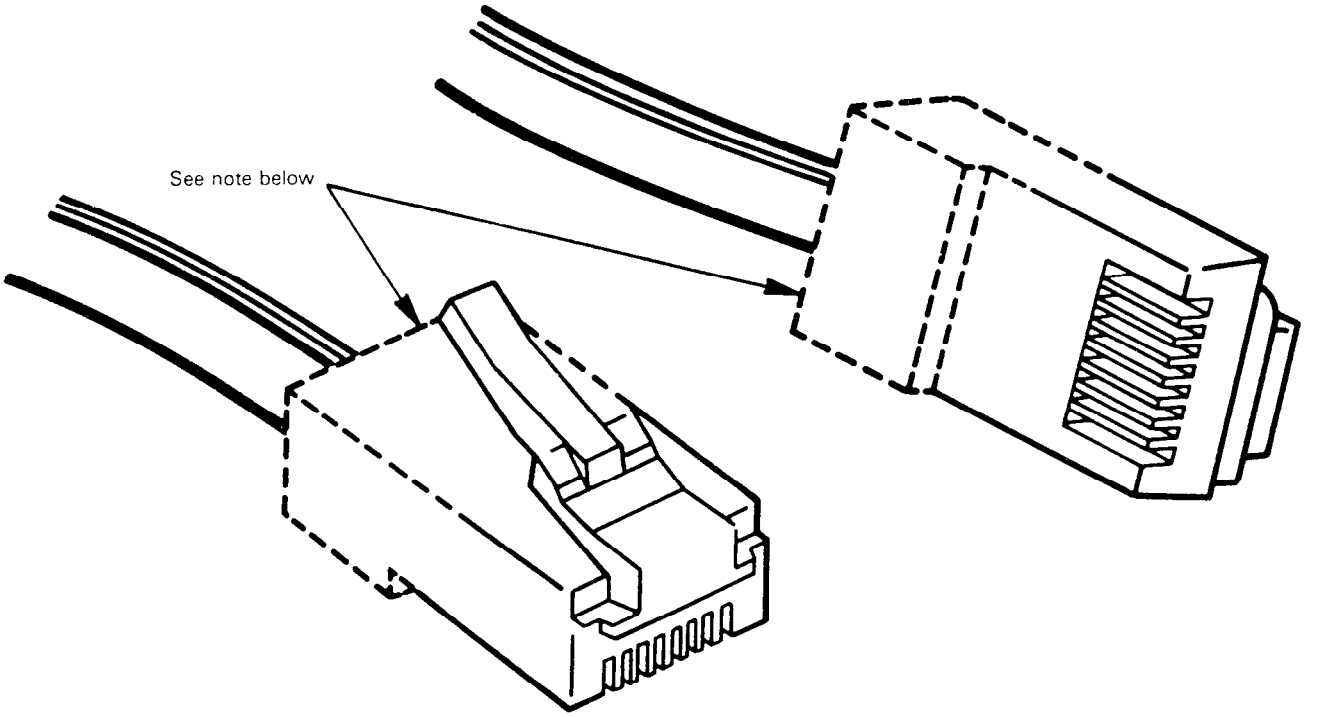

NOTE – This portion of the plug illustrates a structure necessary for securing the cordage and is not pertinent to proper mating with the jack.

Figure 1 – Plug – 8 pole

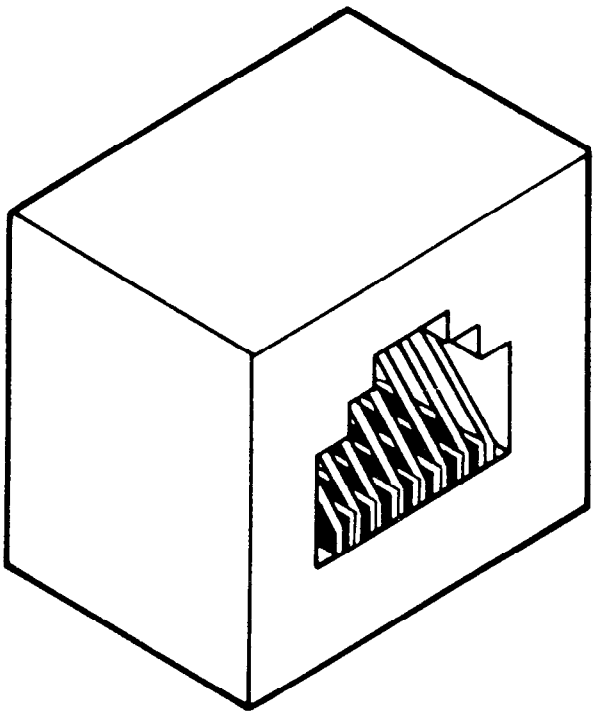

Figure 2 – Jack – 8 pole

Copyright International Organization for Standardization
Provided by IHS under license with ISO
No reproduction or networking permitted without license from IHS
Not for Resale

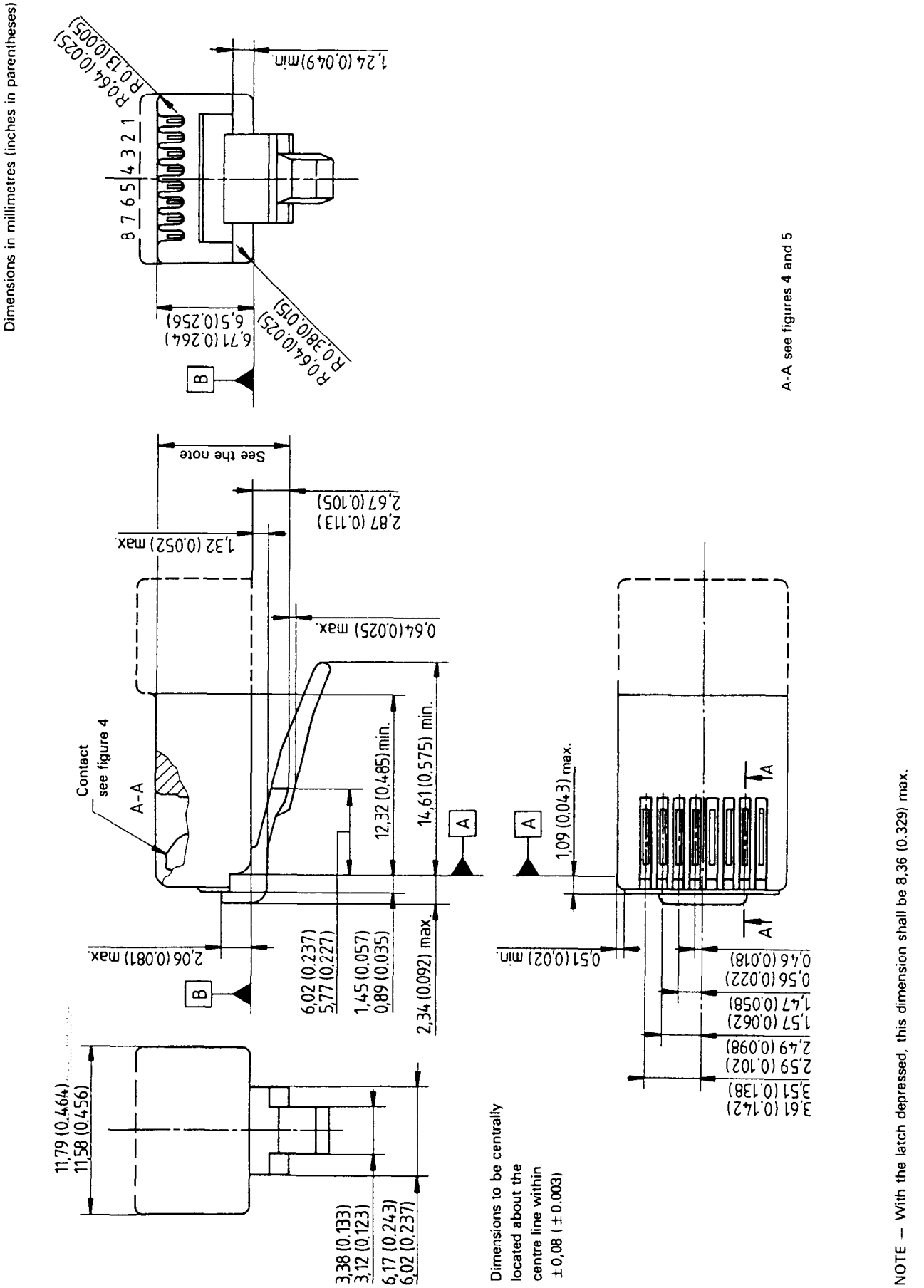

Figure 3 — Plug mechanical specification

NOTE — With the latch depressed, this dimension shall be 8,36 (0.329) max.

Copyright International Organization for Standardization
Provided by IHS under license with ISO
No reproduction or networking permitted without license from IHS
Not for Resale

Dimensions in millimetres (inches in parentheses)

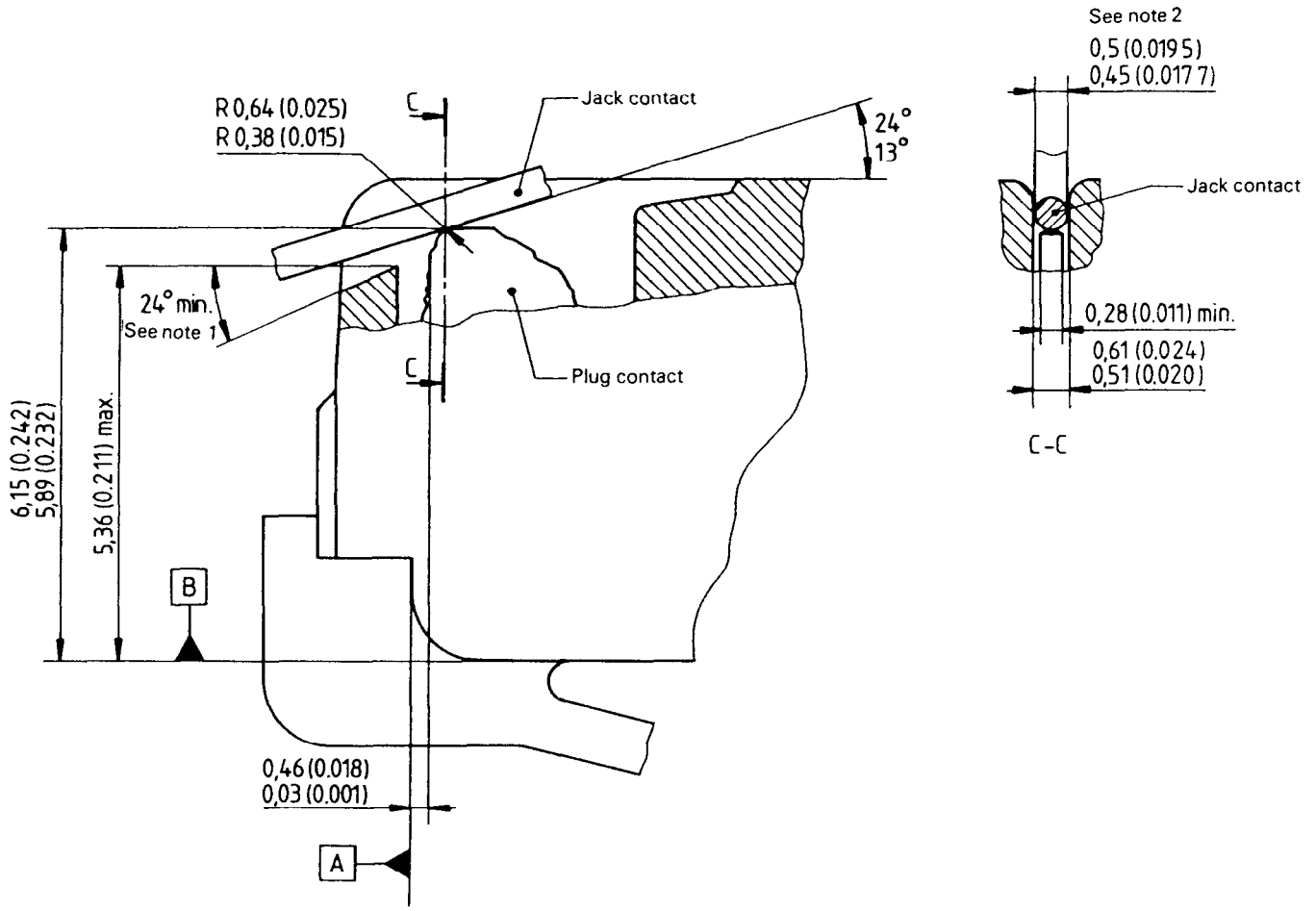

NOTES

1 The 24° min. angle applies only to plugs with front plastic walls higher than 4,83 mm (0.190 in).

2 Jack contacts may be rectangular with a width of 0,50 (0.019 5) max. and 0,36 (0.014) min.

Figure 4 — Plug/jack contact specification

Copyright International Organization for Standardization
Provided by IHS under license with ISO
No reproduction or networking permitted without license from IHS
Not for Resale

Dimensions in millimetres (inches in parentheses)

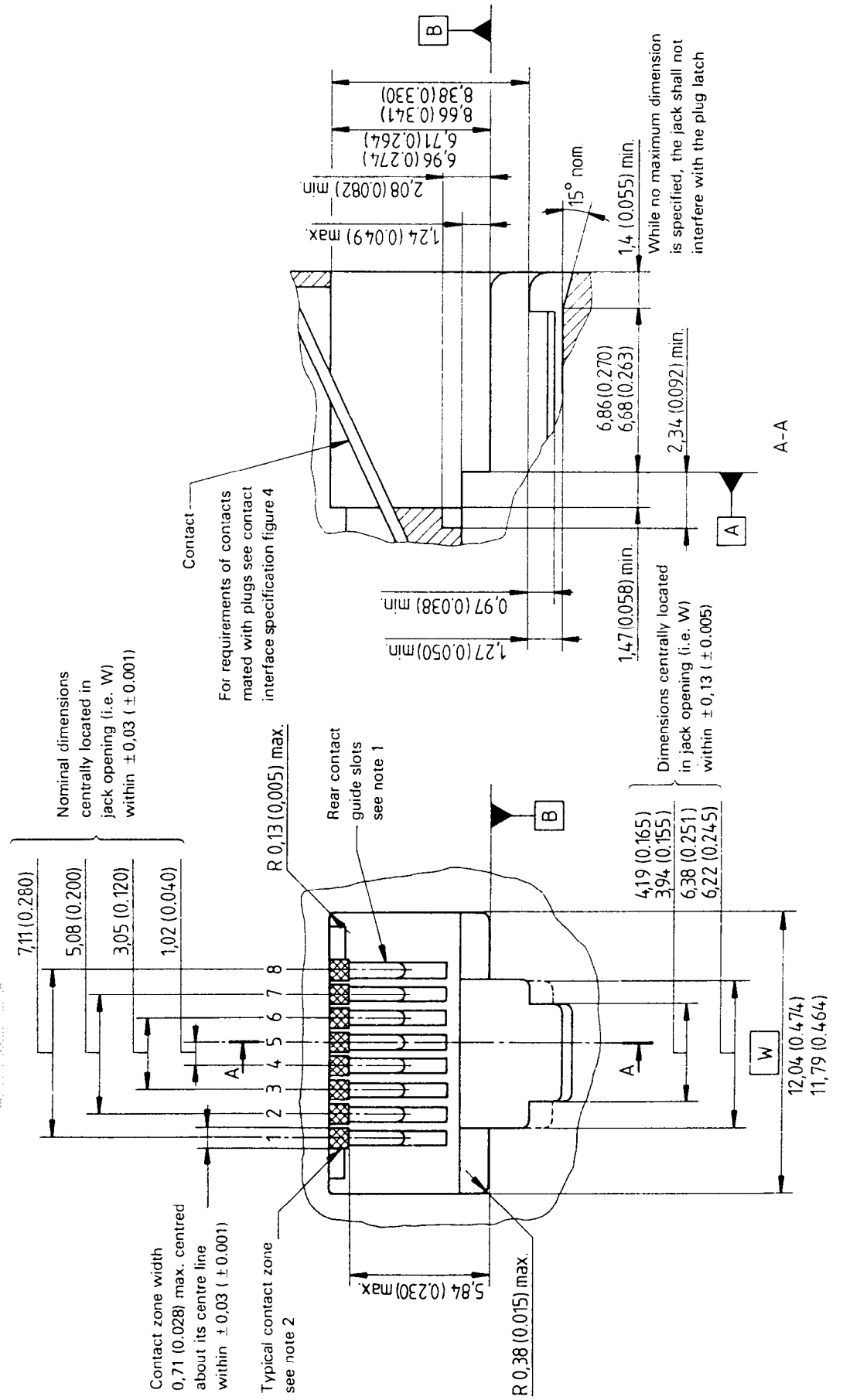

NOTES

1 Guide slots shall prevent any individual contact from being displaced from its associated slot while permitting movement within individual slots.

2 Jack contacts shall be within their individual contact zone to ensure proper mating as a plug is inserted.

Figure 5 — Jack mechanical specification

Copyright International Organization for Standardization
Provided by IHS under license with ISO
No reproduction or networking permitted without license from IHS
Not for Resale

Annex A
(informative)

Interface cabling arrangements[1].

The interface cabling arrangements, implied by the requirements in CCITT Recommendation I.430, section 4 are described in this annex. Figure A.1 illustrates the cabling arrangements, for the ISDN basic access interface, and shows the different parts of the physical interconnection: "connecting cords", "extension cords" and "interface cables".

The same contact numbers assigned at the interface (point I_A in CCITT Recommendation I.430, figure 2/I.430) of TEs for TRANSMIT and RECEIVE conductor pairs are assigned at the interface (point I_B in CCITT Recommendation I.430, figure 2/I.430) of NTs for RECEIVE and TRANSMIT , respectively, conductor pairs. This provides for a given conductor to be connected to the same contact in jacks at both ends of interface cables. However, it means that interface cables are suitable for NT-to-TE and NT1-to-NT2s interconnections only.

For TE-to-TE interconnections, an adapter with a crossover to connect TRANSMIT to RECEIVE is required. Similar statements apply to contacts/conductors (pairs assigned to contact numbers 1-2 and 7-8) used for optional power transfer.

As indicated in Recommendation I.430, section 4, interface cables are terminated in the same type of connector part (jack) at both ends. This means that NTs or TEs may be connected at either end of point-to-point cables.

Extension cords have a plug at one end and a jack at the other end. They cannot be used to extend TE connecting cords in connections to Passive Bus wiring configurations because the bridging impedance of an extension cord (of even a short length) can adversely affect operation (including that of other TEs) in Passive Bus configurations. The length of the extension cord(s) associated with a TE in point-to-point configurations is limited to 25 m.

Connecting cords provide a plug for connection to an interface cable (or extension cord). The acceptable maximum length of such cords will generally be limited by the need for compliance with transmit and receive-circuit impedance requirements specified in CCITT Recommendation I.430, section 8.

While there is no restriction on the minimum length of such cords in a particular application , TEs are required to include a cord of at least 5 m in length .

It is also significant that, in most ISDN applications, the interface cable will be user's premises wiring and the jack must be available in a form suitable for wall mounting. Available assemblies of the specified jack, which are intended for such mounting, may provide a housing for a suitable mounting of the transmit and receive pair terminating resistors. As specified in CCITT Recommendation I.430, figure 2/I.430, the terminating resistors must be located, for point-to-point wiring configurations, in or at the jack and must be connected across contact pairs 4-5 and 3-6. For passive bus wiring configurations, the terminating resistors may be mounted in such jack assemblies located at the ends of the bus.

It is equally important to recognize that the interface cable may be wired directly to NTs without the interface connector and with the interchange circuit terminating resistors provided internal to the equipment. This is possible where the cable is provided in association with or as part of the NT. In such applications, the only interface of significance (at which the requirements of CCITT Recommendation I.430 apply) may be at the jack (point I_A in CCITT Recommendation I.430, figure 2/I.430) for the connection of TEs . In addition, the combination of the NT connecting cord and interface cabling may be of zero length.

Another alternative NT connection arrangement uses a jack mounted on the NT equipment entity, which includes the terminating resistors. The jack may not conform to this International Standard, but where the jack does conform, the contact assignments shall be as specified. Where a cord, terminated at each end with a plug, is used to connect

[1] Interface cabling arrangements may be the subject of national regulations

Copyright International Organization for Standardization
Provided by IHS under license with ISO
No reproduction or networking permitted without license from IHS
Not for Resale

to the interface wiring, the cord is considered a part of such wiring.

For NT2s (e.g., PABX) serving multiple TEs, multiple interface cables may be connected to the NT2 with a larger connector, which does not conform to this International Standard.

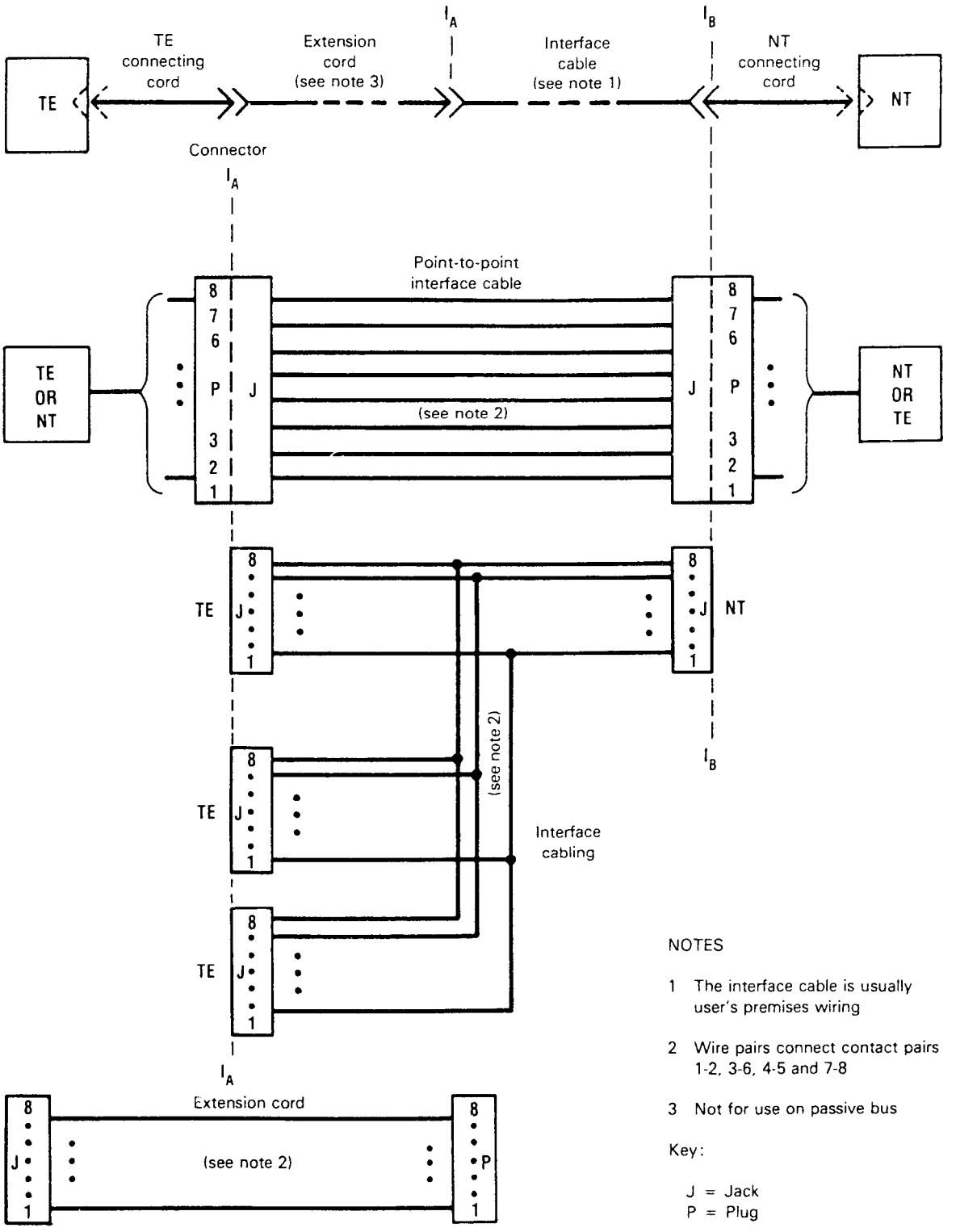

Figure A.1 — Cabling and connector arrangements

Copyright International Organization for Standardization
Provided by IHS under license with ISO
No reproduction or networking permitted without license from IHS
Not for Resale

Annex B
(informative)

Optional powering provisions

CCITT Recommendation I.430, section 9, recognizes two methods of powering TEs from NTs using interface conductors. It also recognizes the use of additional interface conductors for powering NTs or other TEs from TEs. All three powering provision are optional and the latter provision is, in addition, considered beyond the scope of the Recommendation except with respect to the provision for optional conductors for such use.

One method of powering TEs from NTs is the use of the Transmit and Receive pairs in the phantom mode. The second method is to use an optional pair assigned to contacts 7-8 at the NTs and TEs. The voltage involved and power available are specified in I.430, section 9.

The powering capability provided for, but not specified in CCITT Recommendation I.430, is the (optional) use of contact pair 1-2 at NTs and TEs. This power source/sink capability provides for the possibility of powering TEs that accept power on contacts 7-8 in TE-to-TE interconnections with a crossover adapter. It also permits powering NTs from TEs. Even though it is not specified in CCITT Recommendation I.430, because of its use in TE-to-TE interconnections, any power source provided on contact pair 1-2 should conform to the requirements, specified in CCITT Recommendation I.430, section 9.2 (see the note to the table).

For both optional capabilities for accepting power, contact pairs 7-8 at TEs and 1-2 at NTs, the predominant source of power may be a power supply separate from either equipment. Many TEs in large buildings can be expected to be powered by power supplies located in remote wiring closets and common to many TEs.

TEs may be designed to require (or accept) power in the phantom mode or on contacts 7-8 or they may be designed to be self or independently powered. Only TEs having the latter capability are truly portable. The provision for powering TEs from NTs or NT2s from NT1s, using either of the optional methods, is a Network or NT-Service option.

Copyright International Organization for Standardization
Provided by IHS under license with ISO
No reproduction or networking permitted without license from IHS
Not for Resale

Annex C
(informative)

Extract from CCITT Recommendation I.430 : 1988

8.9 *Standard ISDN basic access TE cord*

A connecting cord for use with a TE designed for connection with a "standard ISDN basic access TE cord" shall have a maximum length of 10 meters and shall conform to the following:

a) Cords having a maximum length of 7 meters:

- the maximum capacitance of pairs for transmit and receive functions shall be less than 300 pF;
- the characteristic impedance of pairs used for transmit and receive functions shall be greater than 75 Ω at 96 kHz;
- the crosstalk loss, at 96 kHz, between any pair and a pair to be used for transmit or receive functions shall be greater than 60 dB with terminations of 100 Ω;
- The resistance of an individual conductor shall not exceed 3 Ω;
- cords shall be terminated at both ends in plugs (individual conductors shall be connected to the same contacts in the plug at each end).

b) Cords having a length greater than 7 meters:

- cords shall conform to the above requirements except that a capacitance of 350 pF is permitted;
- TEs may be designed that include a connecting cord which is part of the TE. In this case the requirements for a standard ISDN basic access TE cord do not apply.

Copyright International Organization for Standardization
Provided by IHS under license with ISO
No reproduction or networking permitted without license from IHS
Not for Resale

Annex D
(informative)

Bibliography

[1] IEC 603-7:1990, *Connectors for frequencies below 3 MHz for use with printed boards – Part 7: Detailed specification for connectors, 8-way , including fixed and free connectors with common features.*

Copyright International Organization for Standardization
Provided by IHS under license with ISO
No reproduction or networking permitted without license from IHS
Not for Resale

UDC 681.327.8:621.39:621.316.541

Descriptors: data processing, information interchange, telecommunications, network interconnection, computer interfaces, multi-contact connectors, plug connectors, socket connectors, specifications, dimensions, interfaces.

Price based on 12 pages

Copyright International Organization for Standardization
Provided by IHS under license with ISO
No reproduction or networking permitted without license from IHS

Not for Resale