INTERNATIONAL STANDARD ISO 8860-2 : 1987
TECHNICAL CORRIGENDUM 1

Published 1990-11-15

INTERNATIONAL ORGANIZATION FOR STANDARDIZATION • МЕЖДУНАРОДНАЯ ОРГАНИЗАЦИЯ ПО СТАНДАРТИЗАЦИИ • ORGANISATION INTERNATIONALE DE NORMALISATION
INTERNATIONAL ELECTROTECHNICAL COMMISSION • МЕЖДУНАРОДНАЯ ЭЛЕКТРОТЕХНИЧЕСКАЯ КОМИССИЯ • COMMISSION ÉLECTROTECHNIQUE INTERNATIONALE

Information processing — Data interchange on 90 mm (3.5 in) flexible disk cartridges using modified frequency modulation recording at 7 958 ftprad on 80 tracks on each side —

Part 2:
Track format

TECHNICAL CORRIGENDUM 1

Traitement de l'information — Echange de données sur cartouches à disquette de 90 mm (3,5 in) *utilisant un enregistrement à modulation de fréquence modifiée (MFM) à* 7 958 ftprad *sur 80 pistes sur chaque face —*

Partie 2: Schéma de piste

RECTIFICATIF TECHNIQUE 1

Technical corrigendum 1 to International Standard ISO 8860-2:1987 was prepared by ISO/IEC JTC 1, *Information technology.*

Page 3

Clause 5

Insert the following before the words "After formatting":

"Formatting of a track shall commence with the occurrence of Index. Index shall occur within ± 410 µs at 300 r/min, and ± 205 µs at 600 r/min, of the instant at which reference line B (see 7.4.2.2 of ISO 8860-1) is parallel to the line of access.

During formatting, the rotational speed of the disk shall be

— averaged Index-to-Index: 300 r/min or 600 r/min ± 2,0 %

— averaged over a sector: 300 r/min or 600 r/min ± 2,0 %"

UDC 681.327.63 **Ref. No. ISO 8860-2 : 1987/Cor.1 : 1990 (E)**

Descriptors: data processing, information interchange, data recording devices, magnetic disks, flexible disks, track formats, specifications.

© ISO/IEC 1990

Copyright International Organization for Standardization
Provided by IHS under license with ISO
No reproduction or networking permitted without license from IHS
Not for Resale

F-54-35

8860 PT 2-87 4851903 0066549 8

INTERNATIONAL STANDARD

ISO 8860-2

First edition
1987-07-01

INTERNATIONAL ORGANIZATION FOR STANDARDIZATION
ORGANISATION INTERNATIONALE DE NORMALISATION
МЕЖДУНАРОДНАЯ ОРГАНИЗАЦИЯ ПО СТАНДАРТИЗАЦИИ

Information processing — Data interchange on 90 mm (3.5 in) flexible disk cartridges using modified frequency modulation recording at 7 958 ftprad on 80 tracks on each side —

Part 2 :
Track format

Traitement de l'information — Échange de données sur cartouches à disquette de 90 mm (3,5 in) *utilisant un enregistrement à modulation de fréquence modifiée (MFM) à* 7 958 ftprad *sur 80 pistes sur chaque face —*

Partie 2 : Schéma de piste

Reference number
ISO 8860-2 : 1987 (E)

Copyright International Organization for Standardization
Provided by IHS under license with ISO
No reproduction or networking permitted without license from IHS
Not for Resale

Foreword

ISO (the International Organization for Standardization) is a worldwide federation of national standards bodies (ISO member bodies). The work of preparing International Standards is normally carried out through ISO technical committees. Each member body interested in a subject for which a technical committee has been established has the right to be represented on that committee. International organizations, governmental and non-governmental, in liaison with ISO, also take part in the work.

Draft International Standards adopted by the technical committees are circulated to the member bodies for approval before their acceptance as International Standards by the ISO Council. They are approved in accordance with ISO procedures requiring at least 75 % approval by the member bodies voting.

International Standard ISO 8860-2 was prepared by Technical Committee ISO/TC 97, *Information processing systems.*

Users should note that all International Standards undergo revision from time to time and that any reference made herein to any other International Standard implies its latest edition, unless otherwise stated.

© International Organization for Standardization, 1987 ●

Printed in Switzerland

Copyright International Organization for Standardization
Provided by IHS under license with ISO
No reproduction or networking permitted without license from IHS
Not for Resale

Contents

Page

0 Introduction ... 1

1 Scope and field of application ... 1

2 Conformance ... 1

3 References ... 1

4 General requirements ... 1

4.1 Mode of recording ... 1

4.2 Track location tolerance of the recorded flexible disk cartridge ... 1

4.3 Recording offset angle ... 1

4.4 Density of recording ... 2

4.5 Flux transition spacing ... 2

4.6 Average Signal Amplitude ... 3

4.7 Byte ... 3

4.8 Sector ... 3

4.9 Cylinder ... 3

4.10 Cylinder number ... 3

4.11 Data capacity of a track ... 3

4.12 Hexadecimal notation ... 3

4.13 Error Detection Characters (EDC) ... 3

5 Track layout ... 3

5.1 Index Gap ... 3

5.2 Sector Identifier ... 3

5.3 Identifier Gap ... 4

5.4 Data Block ... 4

5.5 Data Block Gap ... 4

5.6 Track Gap ... 4

Copyright International Organization for Standardization
Provided by IHS under license with ISO
No reproduction or networking permitted without license from IHS
Not for Resale

6 Coded representation of data 4

6.1 Standards 4

6.2 Coding methods 4

Annexes

A EDC implementation 6

B Procedure and equipment for measuring flux transition spacing 7

C Data separators for decoding MFM recording 9

Bibliography 10

Copyright International Organization for Standardization
Provided by IHS under license with ISO
No reproduction or networking permitted without license from IHS Not for Resale

8860 PT 2-87

Information processing — Data interchange on 90 mm (3.5 in) flexible disk cartridges using modified frequency modulation recording at 7 958 ftprad on 80 tracks on each side —

Part 2 : Track format

0 Introduction

ISO 8860 specifies the characteristics of 90 mm (3.5 in) flexible disk cartridges recorded at 7 958 ftprad using Modified Frequency Modulation (MFM) recording on 80 tracks on each side.

ISO 8860-1 specifies the mechanical, physical and magnetic characteristics of the cartridge, so as to provide physical interchangeability between data processing systems.

ISO 8860-1 and ISO 8860-2, together with the labelling scheme specified in ISO 9293, provide for full data interchange between data processing systems.

1 Scope and field of application

This part of ISO 8860 specifies the track layout, the track format and the characteristics of recorded signals.

NOTE — Numeric values in the SI and/or Imperial measurement system in this part of ISO 8860 may have been rounded off and therefore are consistent with, but not exactly equal to, each other. Either system may be used, but the two should be neither intermixed nor re-converted. The original design was made using SI units.

2 Conformance

A 90 mm (3.5 in) flexible disk cartridge shall be in conformance with this part of ISO 8860 if it meets all mandatory requirements contained herein.

A prerequisite for conformance with this part of ISO 8860 is conformance with ISO 8860-1.

3 References

ISO 646, *Information processing — ISO 7-bit coded character set for information interchange.*

ISO 2022, *Information processing — ISO 7-bit and 8-bit coded character sets — Code extension techniques.*

ISO 4873, *Information processing — ISO 8-bit code for information interchange — Structure and rules for implementation.*

ISO 8860-1, *Information processing — Data interchange on* 90 mm (3.5 in) *flexible disk cartridges using modified frequency modulation recording at* 7 958 ftprad *on 80 tracks on each side — Part 1 : Dimensional, physical and magnetic characteristics.*

ISO 9293, *Information processing — Volume and file structure of flexible disk cartridges for information interchange.*

4 General requirements

4.1 Mode of recording

The mode of recording shall be Modified Frequency Modulation (MFM) for which the conditions are

a) a flux transition shall be written at the centre of each bit cell containing a ONE;

b) a flux transition shall be written at each cell boundary between consecutive bit cells containing ZEROs.

Exceptions to this are defined in 4.12.

4.2 Track location tolerance of the recorded flexible disk cartridge

The centrelines of the recorded tracks shall be within ± 0,028 mm (± 0.001 1 in) of the nominal positions and over the range of operating environment specified in ISO 8860-1.

4.3 Recording offset angle (see figure 1)

At the instant of writing or reading a magnetic transition, the transition shall have an angle of

$$\theta = \arcsin\left(\frac{d}{R_n}\right) \pm 18'$$

where R_n is the radius through that transition (see ISO 8860-1).

Copyright International Organization for Standardization
Provided by IHS under license with ISO
No reproduction or networking permitted without license from IHS
Not for Resale

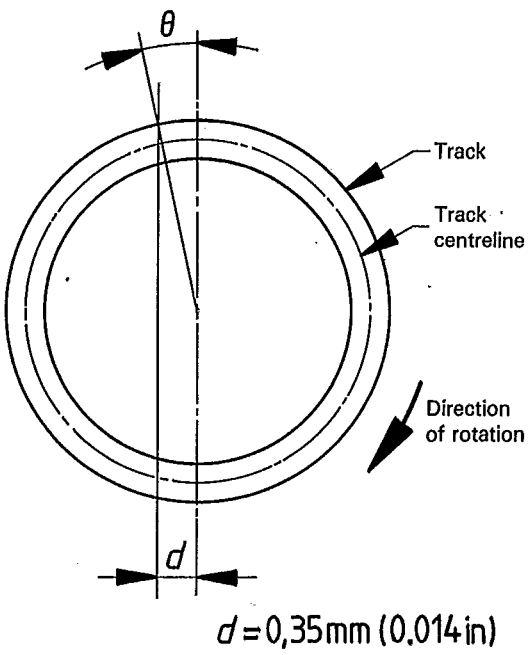

Figure 1

NOTE — As tracks may be written and overwritten at extremes of the tolerances given in 4.2 and 4.3, a band of old information may be left at one edge of the newly written data and would constitute unwanted noise when reading. It is, therefore, necessary to trim the edges of the tracks by erasure after writing.

4.4 Density of recording

4.4.1 The nominal density of recording shall be 7 958 ftprad. The resulting nominal bit cell length is 125,7 μrad.

4.4.2 The long-term average bit cell length shall be the average bit cell length measured over a sector. It shall be within ± 2,0 % of the nominal bit cell length.

4.4.3 The short term average bit cell length, referred to a particular bit cell, shall be the average of the lengths of the preceding eight bit cells. It shall be within ± 8 % of the long-term average bit cell length.

4.5 Flux transition spacing (see figure 2)

The instantaneous spacing between flux transitions is influenced by the reading and writing process, the bit sequence (pulse crowding effects) and other factors. The locations of the transitions are defined as the locations of the peaks in the signal when reading. Tests should be carried out using a peak-sensing amplifier (see annexes B and C).

4.5.1 The spacing between the flux transitions in a sequence of ONEs shall be between 80 % and 120 % of the short-term average bit cell length.

4.5.2 The spacing between the flux transition for a ONE and that between two ZEROs preceding or following it shall be between 130 % and 165 % of the short-term average bit cell length.

4.5.3 The spacing between the flux transitions of two ONEs surrounding a ZERO shall lie between 185 % and 225 % of the short-term average bit cell length.

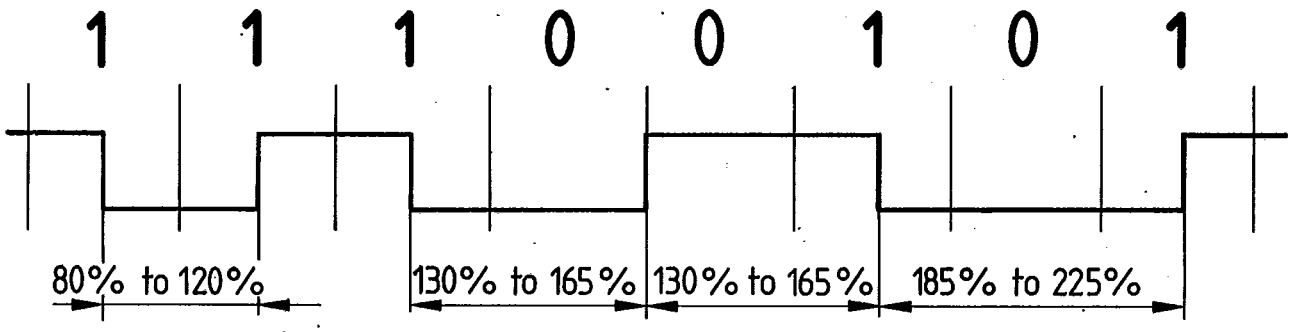

Figure 2

Copyright International Organization for Standardization
Provided by IHS under license with ISO
No reproduction or networking permitted without license from IHS
Not for Resale

4.6 Average Signal Amplitude

For each side the Average Signal Amplitude on any track of the interchanged flexible disk cartridge shall be less than 160 % of SRA_{1f} and more than 40 % of SRA_{2f} (see ISO 8860-1).

4.7 Byte

A byte is a group of eight bit-positions, identified B1 to B8.

The bit in each position is a ZERO or a ONE.

4.8 Sector

All tracks shall be divided into 9 sectors of 512 bytes.

4.9 Cylinder

A pair of tracks, one on each side, having the same track number.

4.10 Cylinder number

The cylinder number shall be a two-digit number identical with the track number of the tracks of the cylinder.

4.11 Data capacity of a track

The data capacity of a track shall be 4 608 bytes.

4.12 Hexadecimal notation

Hexadecimal notation shall be used hereafter to denote the following bytes :

(00) for (B8 to B1) = 00000000
(01) for (B8 to B1) = 00000001
(02) for (B8 to B1) = 00000010
(4E) for (B8 to B1) = 01001110
(FE) for (B8 to B1) = 11111110
(FB) for (B8 to B1) = 11111011
(A1)* for (B8 to B1) = 10100001

In byte (A1)* the boundary transition between B3 and B4 is missing.

4.13 Error Detection Characters (EDC)

The two EDC bytes are hardware-generated by shifting serially the relevant bits, specified later for each part of the track, through a 16-bit shift register described by the generator polynomial :

$$X^{16} + X^{12} + X^5 + 1$$

(See also annex A.)

5 Track layout

After formatting, there shall be 9 sectors on each track. The layout of each track shall be as shown in figure 3.

5.1 Index Gap

At nominal density, this field shall comprise not less than 32 bytes and not more than 146 bytes of unspecified content [but not containing any (A1)*-bytes].

Writing the Index Gap is started when the index is detected. The index in any track lies on a line that is parallel to radius B in figure 4 of ISO 8860-1 and spaced 0,35 mm (0.014 in) from it. Any of the first 16 bytes may be ill-defined due to overwriting.

5.2 Sector Identifier

The layout of this field shall be as given in table 1.

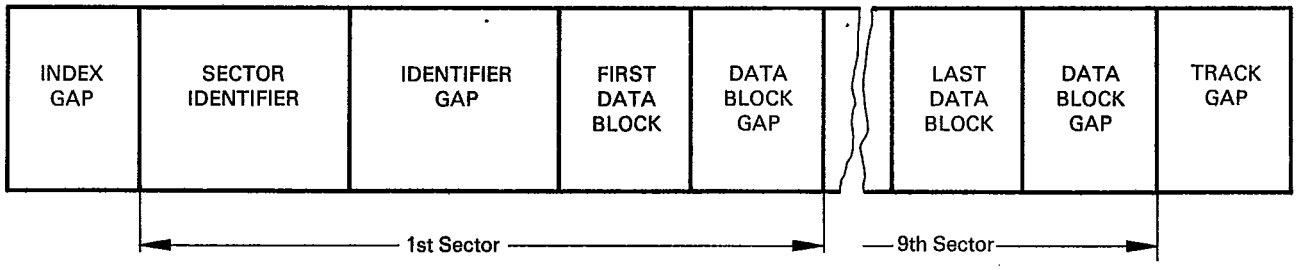

Figure 3

Table 1

Sector identifier							
Identifier mark			Address identifier				
			Track address		S		EDC
12 bytes (00)	3 bytes (A1)*	1 byte (FE)	C 1 byte	Side 1 byte (00) or (01)	1 byte	1 byte (02)	2 bytes

Copyright International Organization for Standardization
Provided by IHS under license with ISO
No reproduction or networking permitted without license from IHS
Not for Resale

5.2.1 Identifier Mark

This field shall comprise 16 bytes :

12 (00)-bytes
3 (A1)*-bytes
1 (FE)-byte

5.2.2 Address Identifier

This field shall comprise 6 bytes.

5.2.2.1 Track Address

This field shall comprise 2 bytes :

a) Cylinder Number (C)

This field shall specify in binary notation the cylinder number from 00 for the outermost cylinder to 79 for the innermost cylinder.

b) Side Number (side)

This field shall specify the side of the disk. On side 0, it shall be (00) on all tracks. On Side 1 it shall be (01) on all tracks.

5.2.2.2 Sector Number (S)

The 3rd byte shall specify in binary notation the sector number from 01 for the first sector to 09 for the last sector.

The sectors may be recorded in any order of their sector numbers.

5.2.2.3 4th byte

The 4th byte shall always be a (02)-byte.

5.2.2.4 EDC

These two bytes shall be generated as defined in 4.13 using the bytes of the Sector Identifier starting with the first (A1)*-byte (see 5.2.1) of the Identifier Mark and ending with the 4th byte (see 5.2.2.3) of the Address Identifier.

If the EDC is incorrect, then the sector is defective. ISO 9293 specifies the handling of defective sectors.

5.3 Identifier Gap

This field shall comprise initially 22 (4E)-bytes. These bytes may have become ill-defined due to overwriting.

5.4 Data Block

The layout of this field shall be as given in table 2.

Table 2

Data block				
Data mark			Data field	EDC
12 bytes (00)	3 bytes (A1)*	1 byte (FB)	512 bytes	2 bytes

5.4.1 Data Mark

This field shall comprise 16 bytes:

12 (00)-bytes
3 (A1)*-bytes
1 (FB)-byte

5.4.2 Data Field

This field shall comprise 512 bytes. If it comprises less than the requisite number of data bytes, the remaining positions shall be filled with (00)-bytes.

5.4.3 EDC

These two bytes shall be generated as defined in 4.13 using the bytes of the Data Block starting with the first (A1)*-byte of the Data Mark and ending with the last byte of the Data Field.

If the EDC is incorrect, then the sector is defective. ISO 9293 specifies the handling of defective sectors.

5.5 Data Block Gap

This field shall comprise initially not less than 78 bytes and not more than 84 (4E)-bytes. These bytes may have become ill-defined due to overwriting. The Data Block Gap is recorded after each Data Block and it precedes the following Sector Identifier. After the last Data Block, it precedes the Track Gap.

5.6 Track Gap

This field shall follow the Data Block Gap of the last sector. (4E)-bytes are written until the index is detected, unless it has been detected during writing of the last Data Block Gap, in which case there shall be no Track Gap.

6 Coded representation of data

6.1 Standards

The contents of the data field shall be recorded and interpreted according to the relevant International Standards for the coding of information, for example ISO 646, ISO 2022 or ISO 4873.

6.2 Coding methods

6.2.1 When the coding method requires it, the data field shall be regarded as an ordered sequence of 8-bit bytes.

Within each byte the bit positions shall be identified by B8 to B1. The high-order bit shall be recorded in position B8 and the low-order bit in position B1. The sequence of recording shall be high-order bit first.

Copyright International Organization for Standardization
Provided by IHS under license with ISO
No reproduction or networking permitted without license from IHS
Not for Resale

When the data is encoded according to an 8-bit code, the binary weights of the bit positions shall be as shown in figure 4.

Binary position	B8	B7	B6	B5	B4	B3	B2	B1
Binary weights	128	64	32	16	8	4	2	1

Figure 4

When the data is encoded according to a 7-bit code, bit position B8 shall contain bit ZERO, and the data shall be encoded in bit positions B7 to B1, using the same binary weights as shown in figure 4.

6.2.2 When the coding method requires it, the data field shall be regarded as an ordered sequence of bit positions, each containing a bit.

Copyright International Organization for Standardization
Provided by IHS under license with ISO
No reproduction or networking permitted without license from IHS
Not for Resale

Annex A

EDC implementation

(This annex does not form part of the standard.)

Figure 5 shows the feedback connections of a shift register which may be used to generate the EDC bytes.

Prior to the operation, all positions of the shift register are set to ONE. Input data are added (exclusive OR) to the contents of position C_{15} of the register to form a feedback. This feedback is in its turn added (exclusive OR) to the contents of position C_4 and position C_{11}.

On shifting, the outputs of the exclusive OR gates are entered respectively into positions C_0, C_5 and C_{12}. After the last data bit has been added, the register is shifted once more as specified above.

The register then contains the EDC bytes.

If further shifting is to take place during the writing of the EDC bytes, the control signal inhibits exclusive OR operations.

To check for errors when reading, the data bits are added into the shift register in exactly the same manner as they were during writing. After the data, the EDC bytes are also entered into the shift register as if they were data. After the final shift, the register contents will be all ZERO if the record does not contain errors.

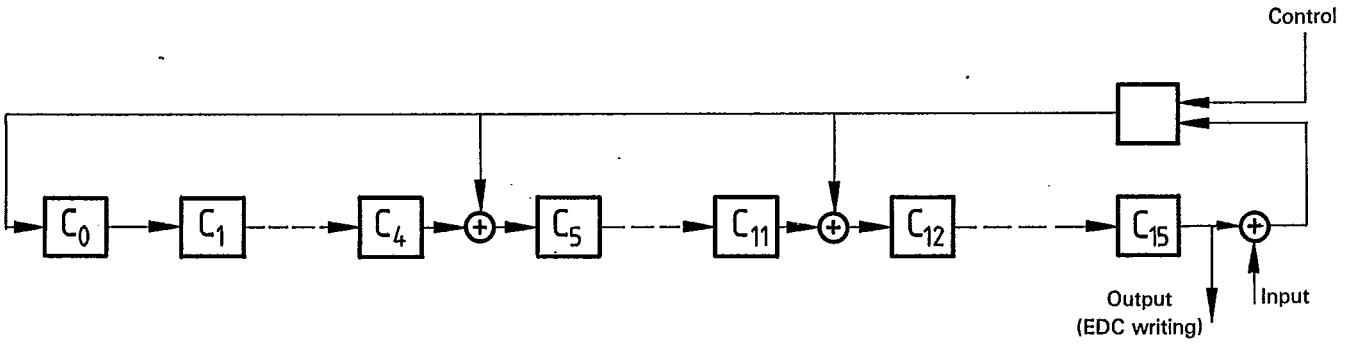

Figure 5

Copyright International Organization for Standardization
Provided by IHS under license with ISO
No reproduction or networking permitted without license from IHS
Not for Resale

Annex B

Procedure and equipment for measuring flux transition spacing

(This annex does not form part of the standard.)

B.1 General

This annex specifies an equipment and a procedure for measuring flux transition spacing on 90 mm flexible disk cartridges using MFM recording at 7 958 flux transitions per radian (ftprad) on each side.

The text is written for use when testing at a nominal rotational speed of 600 r/min. When the nominal speed of test is 300 r/min, the requirements, when different, are given in parentheses.

B.2 Format

The disk to be measured shall be written by the disk drive for data interchange use.

The test patterns 11011011 (DB) and 11011100 (DC) shall be written repeatedly on all tracks.

B.3 Test equipment

B.3.1 Disk drive

The disk drive shall have a rotational speed of 600 ± 6 r/min (300 ± 3 r/min) averaged over one revolution. The average angular speed taken over 32 μs (64 μs) shall not deviate by more than 0,5 % from the speed averaged over one revolution.

B.3.2 Head

B.3.2.1 Resolution

The head shall have an absolute resolution of 65 % to 75 % at track 79 on each side, using the Reference Material RM 8860, applying the calibration factor of the Reference Material appropriate to the side, and recording with the appropriate Test Recording Current.

The resonant frequency of the head shall be at least 500 000 Hz (250 000 Hz).

The resolution shall not be adjusted by varying the load impedance of the head.

The resolution shall be measured at the output of the amplifier defined in B.3.3.1.

B.3.2.2 Offset angle

The offset angle of the head shall be

$$\theta = \arcsin\left(\frac{d}{R_n}\right) \pm 6'$$

where d = 0,35 mm (0.014 in).

B.3.2.3 Contact

Care shall be taken that the heads are in good contact with the disk during tests.

B.3.3 Read channel

B.3.3.1 The read amplifier shall have a flat response from 1 000 to 375 000 Hz (1 000 to 187 500 Hz) within ± 1 dB, and amplitude saturation shall not occur.

Copyright International Organization for Standardization
Provided by IHS under license with ISO
No reproduction or networking permitted without license from IHS
Not for Resale

B.3.3.2 Peak sensing amplifier

Peak sensing shall be carried out by a differentiating and limiting amplifier.

B.3.4 Time interval measuring resolution

The time interval counter shall be able to measure 2 µs (4 µs) to at least 5 ns (10 ns) resolution.

A triggering oscilloscope may be used for this purpose.

B.4 Procedure for measurement

B.4.1 Flux transition spacing measurement

The transition locations shall be measured by the locations of the peaks in the signal when reading.

The flux transition spacing shall be measured by the pulse timing intervals after the read channel amplifier defined in B.3.3.

B.4.2 Flux transition spacing for all tracks

Measure time intervals t_1 to t_5 as shown in figure 6.

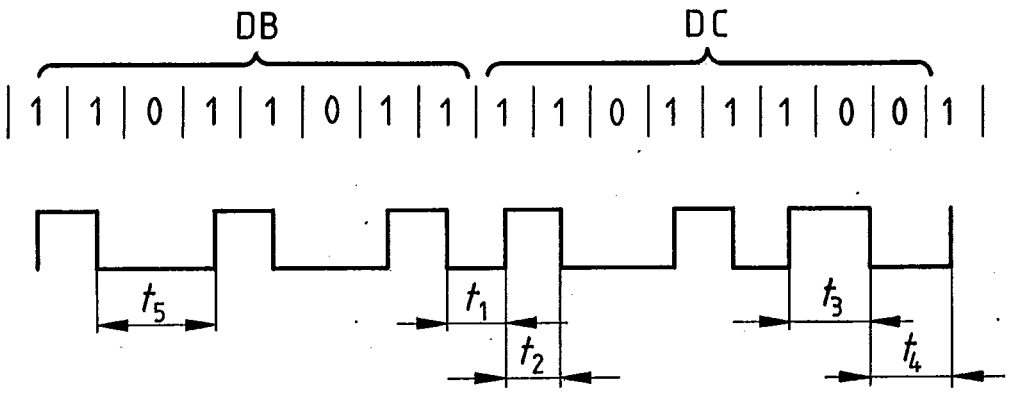

t_1 and t_2 correspond to sub-clause 4.5.1
t_3 and t_4 correspond to sub-clause 4.5.2
t_5 corresponds to sub-clause 4.5.3

Figure 6

Copyright International Organization for Standardization
Provided by IHS under license with ISO
No reproduction or networking permitted without license from IHS
Not for Resale

Annex C

Data separators for decoding MFM recording

(This annex does not form part of the standard.)

The MFM recording method gives nominal flux transition spacings of

t	for the patterns 111 or 000
$3t/2$	for the patterns 100 or 001
$2t$	for the pattern 101

The data separator should be capable of resolving a difference of 2 µs (at a rotational speed of 600 r/min). To achieve this with a low error rate, the data separator cannot operate on a fixed period but should follow changes in the bit cell length.

It is recognized that various techniques may be developed to achieve dynamic data separation; with present technology only an analogue data separator based on a phase-locked oscillator can provide the necessary reliability.

Copyright International Organization for Standardization
Provided by IHS under license with ISO
No reproduction or networking permitted without license from IHS
Not for Resale

8860 PT 2-87 4851903 0066562 0

Bibliography

ISO 6429, *Information processing — ISO 7-bit and 8-bit coded character sets — Additional control functions for character-imaging devices.*

ISO 8859, *Information processing — ISO 8-bit single byte coded graphic character sets.*

Copyright International Organization for Standardization
Provided by IHS under license with ISO
No reproduction or networking permitted without license from IHS

Not for Resale

UDC 681.327.63

Descriptors : data processing, information interchange, data recording devices, magnetic disks, flexible disks, track formats, specifications.

Price based on 10 pages

Copyright International Organization for Standardization
Provided by IHS under license with ISO
No reproduction or networking permitted without license from IHS

Not for Resale