INTERNATIONAL STANDARD

ISO/IEC 8481

Second edition
1996-06-15

Information technology — Telecommunications and information exchange between systems — DTE to DTE direct connections

Technologies de l'information — Télécommunications et échange d'information entre systèmes — Connexions directes de DTE à DTE



Reference number
ISO/IEC 8481:1996(E)

Copyright International Organization for Standardization
Provided by IHS under license with ISO
No reproduction or networking permitted without license from IHS

Not for Resale

Foreword

ISO (the International Organization for Standardization) and IEC (the International Electrotechnical Commission) form the specialized system for worldwide standardization. National bodies that are members of ISO or IEC participate in the development of International Standards through technical committees established by the respective organization to deal with particular fields of technical activity. ISO and IEC technical committees collaborate in fields of mutual interest. Other international organizations, governmental and non-governmental, in liaison with ISO and IEC, also take part in the work.

In the field of information technology, ISO and IEC have established a joint technical committee, ISO/IEC JTC 1. Draft International Standards adopted by the joint technical committee are circulated to national bodies for voting. Publication as an International Standard requires approval by at least 75 % of the national bodies casting a vote.

International Standard ISO/IEC 8481 was prepared by Joint Technical Committee ISO/IEC JTC 1, *Information technology, Telecommunications and information exchange between systems.*

This second edition cancels and replaces the first edition (ISO 8481:1986), which has been technically revised.

Annex A of this International Standard is for information only.

© ISO/IEC 1996

All rights reserved. Unless otherwise specified, no part of this publication may be reproduced or utilized in any form or by any means, electronic or mechanical, including photocopying and microfilm, without permission in writing from the publisher.

ISO/IEC Copyright Office • Case postale 56 • CH-1211 Genève 20 • Switzerland

Printed in Switzerland

Copyright International Organization for Standardization
Provided by IHS under license with ISO
No reproduction or networking permitted without license from IHS

Not for Resale

Introduction

This International Standard provides for the interconnection of Data Terminal Equipment (DTE) without any signal conversion, whereby a DTE is not attached to a Data Circuit-terminating Equipment (DCE), this being part of a telecommunication facility.

The desired DTE to DTE direct connection may be totally located at the user's premises. The aim is to relate these interconnections to the elements of the ITU-T and ISO/IEC standardised DTE/DCE interfaces, in order to avoid equipment proliferation.

The normative part of this standard provides for interconnection for both asynchronous and synchronous transmission, using CCITT Recommendation X.24 interchange circuits, including circuit X for synchronous transmission, and using ITU-T Recommendation V.11 electrical characteristics. An informative annex provides guidance for other cases of interconnection that, though acceptable under limited conditions, cannot be recommended for general use. These alternatives include timing arrangements for synchronous transmission, not reliant on circuit X being provided in both DTEs with ITU-T Recommendation V.11 electrical characteristics.

The informative annex does not cover direct connection between ISDN terminal equipments (type TE1) for which the complexity in the framing of the transmitted signal is such that no general method of interconnection can be recommended.

Copyright International Organization for Standardization
Provided by IHS under license with ISO
No reproduction or networking permitted without license from IHS
Not for Resale

Information technology - Telecommunications and information exchange between systems - DTE to DTE direct connections

1 Scope

This International Standard describes an arrangement for interconnection of Data Terminal Equipment (DTE), without intermediate Data Circuit-terminating Equipment (DCE), in terms of electrical, mechanical, and functional characteristics. This International Standard applies to DTEs with interface circuits standardised in CCITT Recommendation X.24 for transmission over public data networks. The interconnections are restricted to point-to-point connections.

NOTE - The extension to multipoint configurations is at present under study and would use electrical characteristics according to ISO/IEC 8482 - Information Technology - Telecommunications and Information Exchange between Systems - Twisted pair Multipoint interconnection.

This International Standard applies to DTEs which employ the balanced electrical characteristics of ITU-T V.11 for data signalling rates up to 10 Mbit/s.

The interconnection may be used for start-stop or synchronous transmission. For synchronous transmission, this International Standard applies to DTEs which use circuit X - DTE transmit element timing - and circuit S - Signal element timing - (see clause 5).

An informative annex provides information for the interconnection of DTEs with interface circuits according to ITU-T Recommendation V.24 or with electrical characteristics according to ITU-T Recommendations V.10 or V.28.

2 Normative references

The following standards contain provisions which, through reference in this text, constitute provisions of this International Standard. At the time of publication, the editions indicated were valid. All standards are subject to revision, and parties to agreements based on this International Standard are encouraged to investigate the possibility of applying the most recent editions of the standards indicated below. Members of IEC and ISO maintain registers of currently valid International Standards.

ISO 4903:1989, *Information technology - Data communication - 15-pole DTE/DCE interface connector and contact number assignments.*

ITU-T Recommendation V.11 (1994)[1)], *Electrical characteristics for balanced double-current interchange circuits operating at data signalling rates up to 10 Mbit/s.*

CCITT Recommendation X.24 (1989), *List of definitions for interchange circuits between data terminal equipment (DTE) and data circuit-terminating equipment (DCE) on public data networks (PDN).*

1) Previously CCITT Recommendation.

3 Interconnection configuration

Only one type of DTE to DTE interconnection configuration is considered for point-to-point connections with interfaces according to CCITT Recommendation X.24; this being shown in figure 1.

There are two lines of demarcation between the two interconnecting DTEs, one located at each DTE connector. The adaptor and any cable linking these two DTE connectors are not part of either DTE.

Intermediate balanced pair cable may be provided with a maximum length mainly dependent on the parameters of the electrical characteristics of the interchange circuits and the data signalling rate.

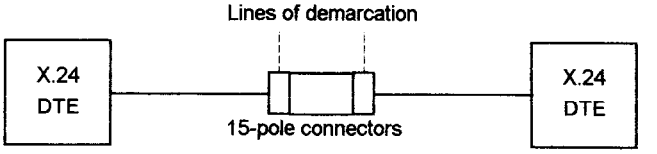

Figure 1 - DTE interconnection configuration

Copyright International Organization for Standardization
Provided by IHS under license with ISO
No reproduction or networking permitted without license from IHS
Not for Resale

4 Interchange circuit requirements

The interchange circuit requirements are specified in terms of electrical, functional, mechanical and interchange point cross-over characteristics.

4.1 Electrical characteristics

The electrical characteristics of ITU-T Recommendation V.11 are mandatory.

Appendix 1 of Recommendation V.11 gives guidance on the operational constraints imposed by the length, balance, and terminating resistance of the interconnecting cable in relation to the data signalling rate. With additional considerations, longer distances may be possible.

4.2 Functional characteristics

The functional characteristics of interchange circuits conform to CCITT Recommendation X.24 for each interface of an interconnecting DTE. The interchange circuits required are listed in the table 1 below.

Table 1 - List of X.24 circuits for DTE interconnection.

X.24 circuit designation	Interchange point V.11	ISO 4903 contact number	Circuit description/ remark
-	-	1	Cable shield [1]
G	C - C'	8	Signal ground (see 4.5)
T	A - A' B - B'	2 9	Transmit
R	A - A' B - B'	4 11	Receive
S	A - A' B - B'	6 13	Signal element timing (from DCE)
X	A - A' B - B'	7 14	DTE transmit signal element timing

1) Contact 1 is for connecting the shields between tandem sections of shielded interface cable.

4.3 Mechanical characteristics

The mechanical characteristics of the interface conform to ISO 4903. Both DTEs provide the 15-pole connector, while the cross-over arrangement specified in 4.4, including any associated cable, with the mating connector conforming to the DTE connector as described in ISO 4903, is furnished by the installation authority.

The cross-over arrangement will therefore also be an adaptor between 15-pole connectors.

4.4 Interchange point cross-over characteristics

Figure 2 shows the basic cross-over arrangement in accordance with the interconnecting configuration shown in figure 1. For synchronous transmission, the signal element timing is not included in figure 2, but is described in clause 5.

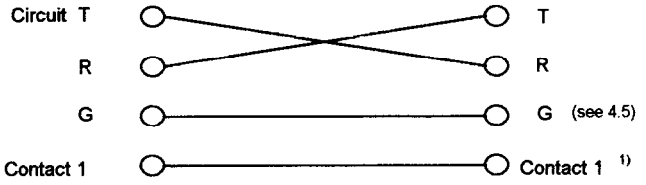

1) Contact 1 is for connecting the shields between tandem sections or shielded interface cable

Figure 2 - Basic circuit cross-over arrangement.

4.5 Earthing

Depending on local safety requirements and for electromagnetic compatibility (EMC) considerations, it may be required to connect circuit G (Signal ground) to the protective earth in each DTE.

If the DTEs are connected to different primary power supplies with different earthing systems, significant potential differences may arise between the signal ground terminals of interconnected DTEs. If these voltages are higher than the common mode acceptance specified in the electrical characteristics of the interchange circuit, transmission errors and even damage to the circuitry may result.

If circuit G is completed between the DTEs, it may reduce this potential difference but excessive circulating currents may result.

NOTE - In practice, different signal ground arrangements may need to be considered for a particular situation.

5 Timing provision

For synchronous transmission, signal element timing shall be interconnected by circuit X - DTE transmit signal element timing. It interconnects to circuit S - Signal element timing, which serves for the receive direction only.

Normally DTEs using X.24 interchange circuits obtain signal element timing information from the DCE. Therefore, these DTEs will require an additional DTE-source element timing circuit X. It is assigned to share the same connector contact as circuit B and F in ISO 4903. Since the direction of transmission of circuit X is opposite to that of circuits B and F, a logical switch or physical option in the DTE may be necessary if the DTE intends to apply more than one of these circuits for alternative applications.

The timing arrangement for connecting two X-series DTEs is illustrated in figure 3 and described below.

The additional DTE signal element timing circuit is provided by each DTE. The cross-over of these timing circuits (see figure 3) shall be added to the basic cross-over arrangement in figure 2.

This arrangement, unlike other arrangements (see Annex A), does not cause skewing between data and timing circuits.

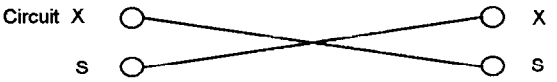

Figure 3 - Signal element timing configuration.

6 Use of control procedures

This International Standard assumes no restrictions on the use of any data link control procedure or any higher level data transfer protocol.

Copyright International Organization for Standardization
Provided by IHS under license with ISO
No reproduction or networking permitted without license from IHS
Not for Resale

Annex A
(informative)

Other cases of DTE to DTE direct connection

A.1 Scope

This annex describes various arrangements for the interconnection of Data Terminal Equipment (DTE), without intermediate Data Circuit-terminating Equipment (DCE), in terms of electrical, mechanical, and functional characteristics.

It applies to DTEs with interface circuits standardised in ITU-T Recommendation V.24 for data transmission over telephone Networks or with interface circuits standardised in CCITT Recommendation X.24 for transmission over public data Networks.

The interconnections are restricted to point-to-point connections. Extension to Multipoint configurations requires further study.

This annex applies:

- To DTEs employing the balanced electrical characteristics of ITU-T Recommendation V.11 for data signalling rates up to 10 Mbit/s with V.24 circuits.
- To DTEs employing the unbalanced electrical characteristics of ITU-T Recommendation V.10 for data signalling rates up to 100 kbit/s and of ITU-T Recommendation V.28 for data rates below 20 kbit/s. Interworking between a DTE employing V.10 and a DTE employing V.11 or with a DTE employing V.28 is permitted.

The interconnection may be used for start-stop and synchronous transmission. For synchronous transmission, the signal element timing may be provided by either one DTE, both DTEs, or by an external signal element timing source which is inserted as intermediate equipment.

A.2 References

ISO 2110:1989, *Information technology - Data communication - 25-pole DTE/DCE interface connector and contact number assignments.*

ISO 2110:1989/Amd.1:1991, *Information technology - Data communication - 25-pole DTE/DCE interface connector and contact number assignments - Amendment 1 : Interface connector and contact assignments for a DTE/DCE interface for data signalling rates above 20 000 bit/s.*

ISO 4902:1989, *Information technology - Data communication - 37-pole DTE/DCE interface connector and contact number assignments.*

ISO 4903:1989, *Information technology - Data communication - 15-pole DTE/DCE interface connector and contact number assignments.*

ISO/IEC 11569:1993, *Information technology - Telecommunications and information exchange between systems - 26-pole interface connector mateability dimensions and contact number assignments.*

ITU-T Recommendation V.10 (1994)[1)], *Electrical characteristics for unbalanced double-current interchange circuits operating at data signalling rates nominally up to 100 kbit/s.*

ITU-T Recommendation V.11 (1994)[1)], *Electrical characteristics for balanced double-current interchange circuits operating at data signalling rates up to 10 Mbit/s.*

ITU-T Recommendation V.24 (1994)[1)], *List of definitions for interchange circuits between data terminal equipment (DTE) and data circuit-terminating equipment (DCE).*

CCITT Recommendation X.24 (1989), *List of definitions for interchange circuits between data terminal equipment (DTE) and data circuit-terminating equipment (DCE) on public data networks (PDN).*

ITU-T Recommendation V.28 (1994)[1)], *Electrical characteristics for unbalanced double-current interchange circuits.*

1) Previously CCITT Recommendation.

Copyright International Organization for Standardization
Provided by IHS under license with ISO
No reproduction or networking permitted without license from IHS
Not for Resale

A.3 Interconnection configurations

Three types of DTE to DTE interconnection configurations are considered for point-to-point connections with interfaces according to ITU-T Recommendation V.24 and CCITT Recommendation X.24. They are shown in figure A.1.

There are two lines of demarcation between the two interconnecting DTEs, one located at each DTE connector. The adaptor and any cable linking these two DTE connectors are not part of either DTE.

Intermediate balanced pair cable may be provided with a length mainly dependent on the parameters of the electrical characteristics of the interchange circuits.

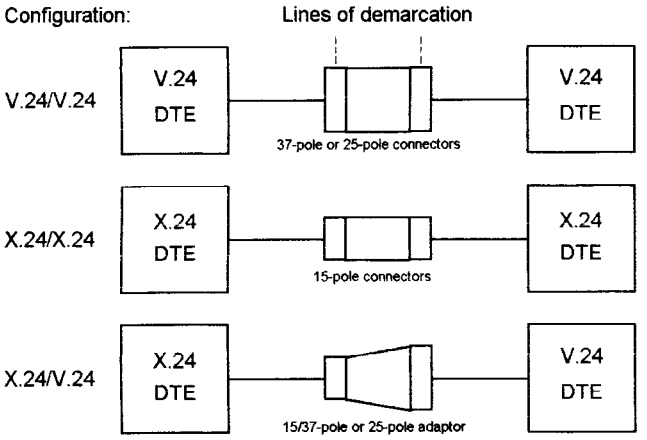

Figure A.1 - DTE interconnection configurations.

A.4 Interchange circuit requirements

The interchange circuit requirements are specified in terms of electrical. functional, mechanical, and interchange point cross-over characteristics.

A.4.1 Electrical characteristics

Recommendation V.11 gives guidance to operational constraints imposed by the length, balance and terminating resistance of the interconnecting cable in relation to the data signalling rate. With additional considerations, longer distances may be possible.

DTEs using the unbalanced electrical characteristics, with the category 1 receiver configuration of ITU-T Recommendation V.10, are permitted for applications up to 100 kbit/s. Reduced performance in terms of cable length may be experienced, however. Reference should be made to ITU-T Recommendation V.10 for constraints imposed by length of interconnecting cable in relation to data signalling rate.

DTEs using the electrical characteristics for unbalanced double-current interchange circuits of ITU-T Recommendation V.28 are permitted for applications below 20 kbit/s. The distance capability however is limited.

Interoperation between DTEs employing V.10 generators on one side of the DTE/ DTE interface and V.11 generators on the other side of the DTE/DTE interface is permitted as described in ITU-T Recommendation V.10.

Interoperation between a DTE employing V.10 electrical characteristics and a DTE employing V.28 characteristics is also permitted, provided the precautions outlined in annex D of ISO 4903 are observed.

Copyright International Organization for Standardization
Provided by IHS under license with ISO
No reproduction or networking permitted without license from IHS
Not for Resale

Table A.1 - List of V.24 circuits for DTE interconnection.

V.24 circuit number	Interchange points V.11	Interchange points V.10	ISO 4902 contact number	ISO 2110 or ISO/IEC 11569 contact number	Circuit description/remarks
-	-	-	1	1	Cable shield[1)]
102	C - C'	C - C'	19	7	Signal ground (see 4.6)
103	A - A' B - B'	A - A' C - B'	4 22	2	Transmitted data
104	A - A' B - B'	A - A' C - B'	6 24	3	Received data
105	A - A' B - B'	A - A' C - B'	7 25	4	Request to send[2)]
106	A - A' B - B'	A - A' C - B'	9 27	5	Ready for sending
107	A - A' B - B'	A - A' C - B'	11 29	6	Data set ready
108	A - A' B - B'	A - A' C - B'	12 30	20	Connect data set to line/Data terminal ready
109	A - A' B - B'	A - A' C - B'	13 31	8	Data channel received line signal detector
113	A - A' B - B'	A - A' C - B'	17 35	24	Transmitter signal element timing, DTE source[3)]
114	A - A' B - B'	A - A' C - B'	5 23	15	Transmitter signal element timing, DCE source[3)]
115	A - A' B - B'	A - A' C - B'	8 26	17	Receiver signal element timing

1) Contact 1 is for connecting the shields between tandem sections of shielded interface cable.

2) This circuit is optionally provided by the DTE.

3) Uses of circuits 113 and 114 are described in clause A.5.

Table A.2 - List of X.24 circuits for DTE interconnection.

X.24 circuit designation	Interchange points V.11[1)]	Interchange points V.10	ISO 4903 contact number	ISO 2110 contact number	Circuit description/remarks
-	-	-	1	1	Cable shield[2)]
G	C - C'	C - C'	8	7	Signal ground (see 4.6)
T	A - A' B - B'	A - A' C - B'	2 9	2	Transmit
R	A - A' B - B'	A - A' C - B'	4 11	3	Receive
C	A - A' B - B'	A - A' C - B'	3 10	-	Control
I	A - A' B - B'	A - A' C - B'	5 12	-	Indication
S	A - A' B - B'	A - A' C - B'	6 13	-	Signal element timing (DCE source)
B	A - A' B - B'	A - A' C - B'	7 14	-	Byte timing[3)]
X	A - A' B - B'	A - A' C - B'	7 14	-	Signal element timing (DTE source) (see clause A.5)

1) For reference only since this case is covered by the normative part of the standard.

2) Contact 1 is for connecting the shields between tandem sections of shielded interface cable.

3) For DTEs using X.24 interchange circuits and requiring byte timing on circuit B, arrangement 6 of figure A.4 applies with the addition of an external source of byte timing.

Copyright International Organization for Standardization
Provided by IHS under license with ISO
No reproduction or networking permitted without license from IHS Not for Resale

A.4.2 Functional characteristics

The functional characteristics of interchange circuits conform to either ITU-T Recommendation V.24 or CCITT Recommendation X.24 for each interface of an interconnecting DTE, depending on the configuration (see figure A.1). The interchange circuits required in each case are listed in table A.1 and in table A.2, respectively.

An additional interchange circuit, designated X, may be used with X.24 as detailed in clause A.5.

A.4.3 Mechanical characteristics

The mechanical characteristics of the interface conform to ISO 2110, ISO/IEC 11569 and ISO 4902 for V.24 interchange circuits, and ISO 2110 and ISO 4903 for X.24 interchange circuits. Both DTEs provide the appropriate DTE connector, while the circuit cross-over arrangement specified in A.4.4, including any associated cable, with the mating connectors conforming to the appropriate DCE connectors as described in ISO 2110, ISO/IEC 11569, ISO 4902 and ISO 4903, is furnished by the installation authority.

The circuit cross-over arrangement will therefore also be an adaptor between 15-pole, 25-pole, and 37-pole connectors as required by the DTEs to be interconnected.

A.4.4 Interchange point cross-over characteristics

Figure 2 shows the basic cross-over arrangement in accordance with the interconnecting configuration shown in figure A.1. For synchronous transmission, the various alternatives for providing signal element timing are not included in figure A.2 and figure A.3, but are described in clause A.5.

A.4.5 Connection options

The circuit cross-over arrangement should allow access to the circuits for the purpose of effecting through-, cross-, or loopback-connections as required in the particular application.

For the leads conveying status information to the DTE, optional arrangements are necessary.

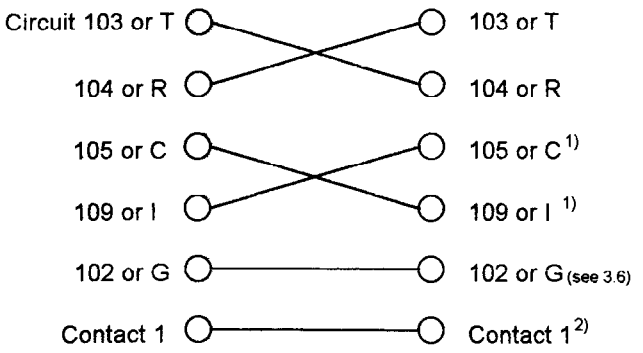

Figure A.2 - Basic circuit cross-over arrangement for V.24 and X.24 interfaces.

1) For start-stop transmission DTEs and other special cases, circuits C and I are omitted. Circuits 105 and 109 may also be omitted by mutual agreement.
2) Contact 1 is for connecting the shields between tandem sections of shielded interface cable.

Basically, information that was required by the DTE from the remote DCE should now be provided by connection to the complementary circuit from the remote DTE, whereas information that was required from the local DCE should now be provided by connection to the complementary circuit of the same DTE.

Circuit 109 may be needed to monitor the state of the other DTE and should therefore be cross-connected to circuit 105. In duplex transmission, circuit 109 can be cross-connected to circuit 108 to be constantly ON.

If the DTE expects a "ready for sending" indication in response to its "request to send" then circuit 106 should be looped back onto its own circuit 105. In all other cases, circuit 106 can be looped back onto circuit 108.

Following these principles and the fact that users may or may not wish to operate additional control circuits to the remote end, the arrangements are indicated in figure A.3 as Alternative 1 (with remote operation of control circuits) and Alternative 2 (without remote operation of control circuits).

In the case of V.28 DTEs, connection of one generator to more than one load may result in an operation outside the ITU-T specification and consequently may not function satisfactorily.

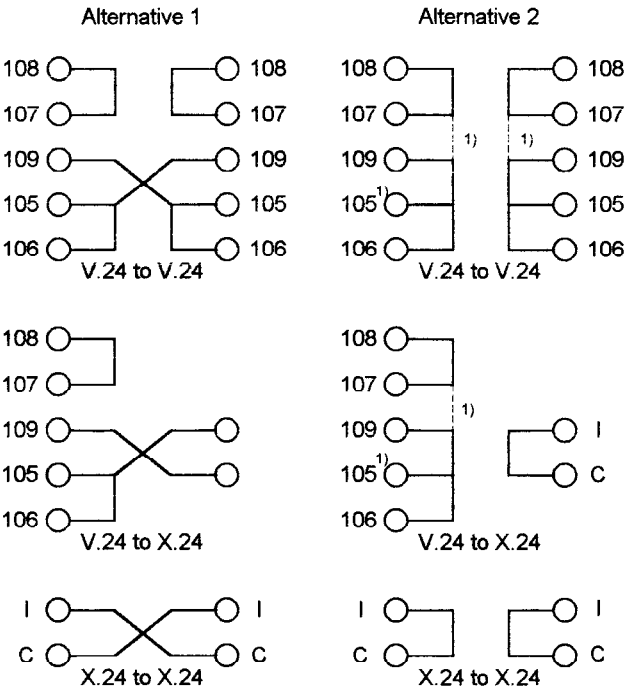

Figure A.3 - Connection options for control circuits.

1) If circuit 105 is not provided by the DTE then circuits 106, 107 and 109 shall be connected to circuit 108.

Copyright International Organization for Standardization
Provided by IHS under license with ISO
No reproduction or networking permitted without license from IHS
Not for Resale

A.4.6 Earthing

Depending on local safety requirements and for electromagnetic compatibility (EMC) considerations it may be required to connect circuit 102 (signal ground) to the protective earth in each DTE.

If the DTEs are connected to different primary power supplies with different earthing systems, significant potential differences may arise between the signal ground terminals of the interconnected DTEs. If these voltages are higher than the common mode acceptance specified in the electrical characteristics of the interchange circuit, transmission errors and even damage to the circuitry may result.

If circuit 102 or G is completed between the DTEs it may reduce this potential difference but excessive circulating currents may result.

NOTE - In practice, different signal ground arrangements may need to be considered for a particular situation.

A.5 Timing alternatives

For synchronous transmission, signal element timing may be provided by both DTEs, by one DTE, or by an external signal element timing source which is inserted as intermediate equipment.

All three alternatives are available for DTEs using V.24 interchange circuits. However, DTEs using X.24 interchange circuits normally obtain signal element timing information from the DCE. Therefore, these DTEs will require an external timing source for direct DTE/DTE connection.

Alternatively, these X-series DTEs may provide an additional circuit for DTE-source signal element timing. This additional DTE-source signal element timing circuit is designated circuit X and has the same function as circuit 113 defined in ITU-T Recommendation V.24. Circuit X is assigned to share the same connector contacts as circuits B and F in ISO 4903. Since the direction of transmission of circuit X is opposite to that of circuits B and F, a logical switch or physical option in the DTE may be necessary if the DTE intends to use more than one of these circuits for alternative applications.

NOTE - If both DTEs provide circuit X with V.11 electrical characteristics, the configuration is covered in the normative part of this standard (clause 5).

Alternative timing arrangements for connecting two V-series DTEs, two X-series DTEs, or a V-series DTE and an X-series DTE are illustrated in figure 4 and described below.

A.5.1 Symmetrical timing

Symmetrical timing is the provision of signal element timing by each DTE for the transmit direction. This requires a cross-over of the timing circuits in the cross-over arrangements (figure A.4, arrangements 1, 4 and 7).

This arrangement, unlike the other arrangements, does not cause skewing between data and timing circuits.

A.5.2 Timing provided by one DTE

With proper connections in the cross-over arrangement, it is possible for one DTE to provide timing for both DTEs (figure A.4, arrangements 2, 5, 8 and 9).

A.5.3 External timing

External timing provided by intermediate equipment may be used and added to the passive cross-over arrangements (figure A.4, arrangements 3, 6 and 10). This is necessary for the interconnection of DTEs that normally depend on DCE signal element timing and have no provision within the DTE to provide signal element timing.

A single timing source may be used to supply signal element timing to more than one pair of interconnected DTEs.

NOTE - As the cable length increases or the data signalling rate increases, the phase relationship between the data and timing signals may shift in non-symmetrical timing configurations. This skewing effect normally will create no problem for data signalling rates of 9.6 kbit/s and below within cable distances recommended. At higher data signalling rates and longer cable lengths, additional phase correction techniques may be necessary to correctly align the data and timing signals.

A.6 Use of control procedures

The guidance in this annex places no restrictions on the use of any data link control procedure or any higher level data transfer protocol.

Copyright International Organization for Standardization
Provided by IHS under license with ISO
No reproduction or networking permitted without license from IHS
Not for Resale

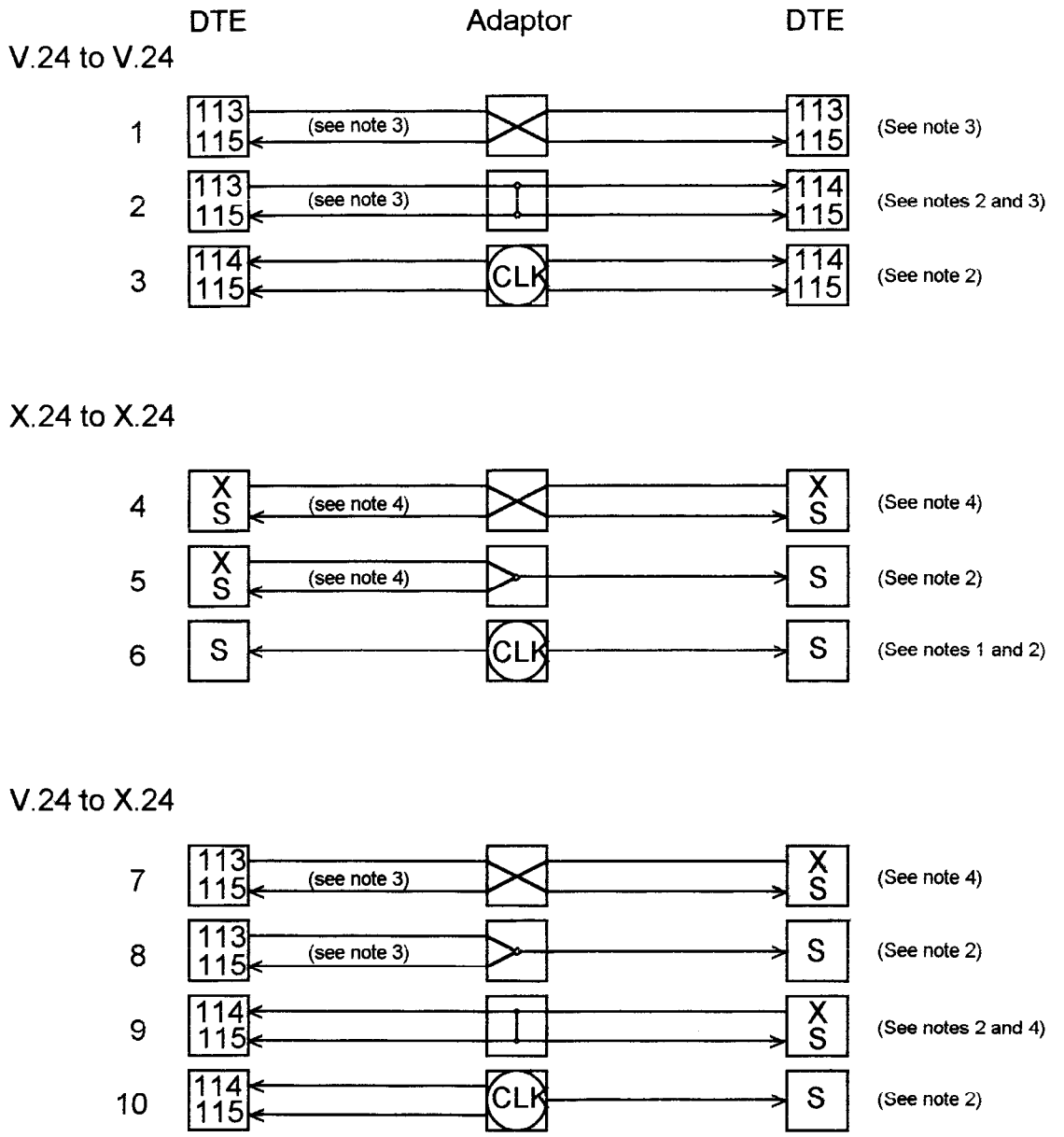

Figure A.4 - Optional signal element timing configurations.

NOTES

1. For DTEs using X.24 interchange circuits and requiring byte timing on circuit B, arrangement 6 of figure A.4 applies with the addition of an external source of byte timing.
2. As the cable length increases or the data signalling rate increases, the phase relationship between the data and timing signals may shift in these arrangements. This skewing effect normally will create no problem for data signalling rates of 9.6 kbit/s and below within cable distances recommended. At higher data signalling rates and longer cable lengths, additional phase correction techniques may be necessary to correctly align the data and timing signals.
3. Some DTEs using V.24 interchange circuits require signal element timing on circuit 114 when supplying transmit signal element timing on circuit 113. In this case, a connection between circuit 113 and 114 should be made as close to the DTE as practical.
4. When circuit X is employed circuit S is used only for sampling the received data.

Copyright International Organization for Standardization
Provided by IHS under license with ISO
No reproduction or networking permitted without license from IHS
Not for Resale

© ISO/IEC

ICS 35.100.10

Descriptors: data processing, information interchange, telecommunications, network interconnection, physical layer, data terminal equipment, connecting equipment, electric connectors, computer interfaces, specifications.

Price based on 8 pages

--`,,```,,,,````-`-`,,`,,`,`,,`---

Copyright International Organization for Standardization
Provided by IHS under license with ISO
No reproduction or networking permitted without license from IHS

Not for Resale