INTERNATIONAL STANDARD

ISO/IEC 8441-2

First edition
1991-08-01

Information technology — High density digital recording (HDDR) —

Part 2:
Guide for interchange practice

Technologies de l'information — Enregistrement numérique à haute densité (HDDR) —

Partie 2: Guide pour l'échange d'information

Reference number
ISO/IEC 8441-2:1991(E)

Copyright International Organization for Standardization
Provided by IHS under license with ISO
No reproduction or networking permitted without license from IHS

Not for Resale

Contents

Page

1 Scope 1

2 Normative references 1

3 Definitions 1

4 Recording and reproducing characteristics 4

4.1 General 4

4.2 Tape speeds 4

4.3 Track configurations 5

4.4 Recorder/reproducer characteristics 5

4.5 Other characteristics 6

5 Methods for high density digital recording 15

5.1 Introduction 15

5.2 Record transfer function 15

5.3 Flux transition densities and rates for high density recording 15

5.4 Data input/output 16

5.5 Data sense 16

5.6 Reproduce equalization 16

5.7 Other system parameters 17

© ISO/IEC 1991
All rights reserved. No part of this publication may be reproduced or utilized in any form or by any means, electronic or mechanical, including photocopying and microfilm, without permission in writing from the publisher.

ISO/IEC Copyright Office • Case Postale 56 • CH-1211 Genève 20 • Switzerland

Printed in Switzerland

Copyright International Organization for Standardization
Provided by IHS under license with ISO
No reproduction or networking permitted without license from IHS

Not for Resale

5.8 Auxiliary data recording **17**

Annexes

A Operating modes, performance categories, and cross-play criteria for high density PCM recording systems **18**

A.1 Performance categories **18**

A.1.1 General **18**

A.1.2 Record head gap length for category A and category B performance **18**

A.1.3 Record head gap length for category C performance **18**

A.1.4 Operating modes **19**

A.2 Single track serial high density recording **19**

A.2.1 Serial high density recording with wideband analogue recorder/reproducer (category A) **19**

A.2.2 Parallel high density digital recording **21**

B Recording techniques **22**

B.1 Recording code names and their abbreviations **22**

B.2 Enhanced NRZ format for parallel HDDR **22**

B.2.1 ENRZ coding **22**

B.2.2 ENRZ — parallel HDDR format **22**

B.2.3 Summary of enhanced NRZ format **22**

B.3 Miller squared format (M^2) for parallel HDDR **23**

B.3.1 Miller squared coding **23**

B.3.2 M^2 format for parallel HDDR **23**

B.3.3 Summary of M^2 format **24**

B.3.4 M^2 format bandwidth utilization/packing density **24**

B.4 Randomized NRZ-L format parallel HDDR **24**

B.4.1 RNRZ-L coding **24**

B.4.2 RNRZ-L parallel HDDR format **24**

B.4.3 Summary of randomized NRZ-L format **25**

B.4.4 Randomized NRZ-L format bandwidth utilization/packing density **25**

B.5 PROP format for parallel HDDR (Pseudo random odd parity) **26**

B.5.1 General **26**

Copyright International Organization for Standardization
Provided by IHS under license with ISO
No reproduction or networking permitted without license from IHS
Not for Resale

B.5.2 Summary of PROP format **27**

B.5.3 PROP format bandwidth utilization **27**

B.6 3PM formats for parallel HDDR **27**

B.6.1 General **27**

B.6.2 3PM format versions **28**

B.6.3 Error detection and correction (formats A and B) **29**

B.6.4 Summary of 3PM formats A and B **29**

B.6.5 3PM format bandwidth utilization **30**

B.7 MODAS airborne recording format **30**

B.7.1 General **30**

B.7.2 Description **30**

Copyright International Organization for Standardization
Provided by IHS under license with ISO
No reproduction or networking permitted without license from IHS
Not for Resale

Foreword

ISO (the International Organization for Standardization) and IEC (the International Electrotechnical Commission) form the specialized system for worldwide standardization. National bodies that are members of ISO or IEC participate in the development of International Standards through technical committees established by the respective organization to deal with particular fields of technical activity. ISO and IEC technical committees collaborate in fields of mutual interest. Other international organizations, governmental and non-governmental, in liaison with ISO and IEC, also take part in the work.

In the field of information technology, ISO and IEC have established a joint technical committee, ISO/IEC JTC 1. Draft International Standards adopted by the joint technical committee are circulated to national bodies for voting. Publication as an International Standard requires approval by at least 75 % of the national bodies casting a vote.

International Standard ISO/IEC 8441-2 was prepared by Joint Technical Committee ISO/IEC JTC 1, *Information technology*.

ISO/IEC 8441 consists of the following parts, under the general title *Information technology — High density digital recording (HDDR)*:

— *Part 1: Unrecorded magnetic tape for (HDDR) applications*

— *Part 2: Guide for interchange practice*

Annexes A and B of this part of ISO/IEC 8441 are for information only.

Copyright International Organization for Standardization
Provided by IHS under license with ISO
No reproduction or networking permitted without license from IHS
Not for Resale

Information technology — High density digital recording (HDDR) —

Part 2:
Guide for interchange practice

1 Scope

This part of ISO/IEC 8441 specifies the minimum performance levels necessary for the effective interchange of information using High Density Digital Recording (HDDR). It also describes methods of testing for determining these levels. It gives guidance on recorders/reproducer characteristics, modes of recording, and modulation patterns.

The imperial dimensions given in this part of ISO/IEC 8441 are the reference dimensions. The metric and imperial dimensions are, however, given to a sufficient degree of accuracy as to be totally interchangeable.

2 Normative references

The following standards contain provisions which, through reference in this text, constitute provisions of this part of ISO/IEC 8441. At the time of publication, the editions indicated were valid. All standards are subject to revision, and parties to agreements based on this part of ISO/IEC 8441 are encouraged to investigate the possibility of applying the most recent editions of the standards indicated below. Members of IEC and ISO maintain registers of currently valid International Standards.

ISO/IEC 3788:1990, *Information processing — 9-track, 12,7 mm (0,5 in) wide magnetic tape for information interchange using phase encoding at 126 ftpmm (3 200 ftpi), 63 cpmm (1 600 cpi).*

ISO 6068:1985, *Information processing — Recording characteristics of instrumentation magnetic tape (including telemetry systems) — Interchange requirements.*

ISO/IEC TR 6371:1989, *Information processing — Interchange practices and test methods for unrecorded instrumentation magnetic tape.*

3 Definitions

For the purposes of this part of ISO/IEC 8441, the following definitions apply.

3.1 aliasing: The false lower frequency components resulting from an insufficient sampling rate (i.e. less than required by the sampling theorem) when reconstructing an analogue signal from its sampled data representation.

3.2 baseline restorer: A device to restore the d.c. component removed by the record/reproduce process.

3.3 bit error: The incorrect interpretation of a binary bit by a message processing unit.

3.4 bit error rate (BER): The rate at which bit errors occur in a message processing unit, expressed in terms of the number of bit errors divided by the total number of bits processed in a given period of time, or from a given length of tape.

3.5 bit packing density: The number of bits recorded per unit track length, usually expressed in terms of bits per millimetre (bit/mm) or kilobits per inch (kbit/in).

3.6 bit slip: The condition in a message processing unit where the bit rate clock has gained (or lost) more than 180° phasing with respect to synchronism with the binary message bits.

Copyright International Organization for Standardization
Provided by IHS under license with ISO
No reproduction or networking permitted without license from IHS
Not for Resale

3.7 bit synchronizer: An information processing unit intended to extract the binary message and associated bit rate clock included in a pulse code modulation (PCM) signal.

3.8 cross play: The ability to record and reproduce on the same or a different machine, or record at one speed and reproduce at the same or different speed.

3.9 cross talk: Interference signals that are coupled from adjacent channels into a given processing unit channel, usually expressed in terms of decibels down from full scale amplitude of the unit channel.

3.10 data azimuth: The instantaneous angle in the plane of the tape between a line perpendicular to the reference edge and either of the two parallel lines defining data scatter.

NOTE 1 Data azimuth may be expressed as the sum of static and dynamic components in the form

$$A + Bf(t)$$

where

$$\int_0^t f(t)\mathrm{d}t = 0$$

3.11 data azimuth (dynamic): The maximum angular deviation, over a period of time, of the data azimuth from its mean value as defined by data azimuth (static). For the purpose of this definition, the word "maximum" is interpreted as being at the 95 % probability level. For a Gaussian distribution, this is two standard deviations (2σ).

NOTE 2 Data azimuth (dynamic) is the maximum value of the quantity $Bf(t)$ in 3.10.

3.12 data azimuth (static): The mean value, over a period of time, of the data azimuth.

NOTE 3 Data azimuth (static) is the quantity A in 3.10.

3.13 data scatter: The minimum distance between two parallel lines, in the plane of the tape, enclosing all data transitions recorded simultaneously on all tracks in the same head.

NOTE 4 The errors in location and angular relation among transient data recorded simultaneously on all odd or even tracks are defined by the terms: data azimuth, data scatter, and individual track data azimuth difference. These are approximately equivalent to the terms: head azimuth, gap scatter, and head segment gap azimuth difference; however, guiding misalignment is included in the data location error definition.

3.14 data spacing: The distance on the tape between simultaneous events recorded on odd and even numbered tracks when interlaced heads are used.

NOTE 5 When recording, this is equal to the head spacing, but on reproducing it is equal to head spacing only when the record and reproduce tensions and head spacing are equal.

3.15 decoder: Information recovery device that accepts digital signals from the tape reproducer and converts them into a form suitable for the output interface.

3.16 digital recording code: The on-tape digital coding of the recorded binary message.

3.17 dropout: Reduction in the reproduce signal amplitude severe enough to cause bit errors.

3.18 duty factor (of a pulse): The ratio of pulse duration to pulse period, often expressed as a percentage.

3.19 edge margin (M): The distance between the outside edge of the highest numbered track and the tape edge (see figure 3).

3.20 edge margin, minimum (M_m): The minimum value of the edge margin.

NOTE 6 This value places an additional constraint on track configurations since, in general, the simultaneous application of all worst-case tolerances for track width, track location, and tape width will result in a value of edge margin less than M_m.

3.21 encoder: A processing device that accepts a data stream at its input and converts it to appropriate digital signals to be recorded on tape.

3.22 error detection: The process of detecting bit errors.

3.23 error correction: The process of correcting detected bit errors.

3.24 eye pattern: The pattern as displayed on an oscilloscope, that results from the superpositioning of the waveforms of the different symbols in a digital data sequence. It is used for assessing the quality of the replayed digital signal.

3.25 flaw: An imperfection in the tape oxide coating due to oxide or slitting debris, foreign particulate matter, absence of coating, etc.

NOTE 7 Such imperfections are the major source of dropouts. Other imperfections such as failure to maintain slitting tolerances and other physical nonuniformities can cause poor tracking which results in reproduce signal fluctuations similar to dropouts.

3.26 flutter: Tape speed errors at frequencies above 0,5 Hz.

Copyright International Organization for Standardization
Provided by IHS under license with ISO
No reproduction or networking permitted without license from IHS
Not for Resale

3.27 flux transition: A 180° change in the flux pattern in a magnetic medium, brought about by the reversal of the magnetic poles within the medium.

3.28 flux transition density: The number of flux transitions (i.e. flux reversals) per unit track length.

3.29 frame synchronizer: A processing device to detect and synchronize frames and subframes of a pulse code modulation bit stream.

3.30 gap length: Distance from the leading edge to the trailing edge of head gap measured perpendicular to the track width (see figure 1).

3.31 gap scatter: The minimum distance between two parallel lines, in the plane of the tape, between which all the gap trailing edges of a record head are embraced (see figure 1).

3.32 head: A group of individual head segments in a fixed assembly.

3.33 head azimuth: The angle formed in the plane of the tape, between a line passing through the gap centres of the two outside head segments and a line perpendicular to the head reference plane (see figure 1).

3.34 head 1: The first record or reproduce head over which an element of tape passes when moving in the normal operating direction (see also 3.39).

3.35 head reference plane: A plane, which may be imaginary, that is parallel to the reference edge of the tape and perpendicular to the plane of the tape.

NOTE 8 For the purpose of this definition the tape is considered as perfect (see figure 1).

3.36 head segment: A single transducer that records or reproduces one track (see figure 1).

3.37 head segment gap azimuth: The angle, formed in the plane of the tape, between a line perpendicular to the head reference plane and a line parallel to the trailing edge of the gap in a record head segment (see figure 1).

3.38 head segment gap azimuth difference: The angular deviation of the azimuth of a head segment gap from the head azimuth.

3.39 head segment number: The number of the head segment corresponding to the track number on the magnetic tape on which that head segment normally operates (see figure 2).

NOTE 9 Head 1 of a pair contains all odd-numbered segments, while head 2 contains all even-numbered segments (see figure 1 and figure 2).

3.40 head spacing (S): The distance along the tape path between the gap centrelines of head 1 and head 2, when interlaced heads are used (see figure 2).

3.41 head tilt: The angle between the plane tangent to the front (active) surface of the head at the centreline of the head segment gaps, and a line perpendicular to the head reference plane (see figure 1).

3.42 high density digital recording (HDDR): Recording of digital data on a magnetic medium, having a flux transition density in excess of 590 transitions per millimetre (15 000 transitions per inch) per track.

3.43 individual track data azimuth difference: The angular deviation of the data azimuth of individual odd or even recorded tracks from the data azimuth of other odd or even tracks.

NOTE 10 The difficulty in making direct optical angular measurements requires this error to be expressed as a loss of signal amplitude when the tape is reproduced with an ideal head, whose gap is aligned to coincide with the data azimuth of all odd or even tracks, as compared to the maximum signal amplitude obtainable by optimizing the reproduce head azimuth for the individual tracks (see figure 1).

3.44 in-line heads: An arrangement in which all record or all reproduce gaps are in line on a single head stack.

3.45 interlaced heads: An arrangement whereby pairs of head stacks are mounted so that alternate tracks are contained in separate head stacks of a pair (see figure 2).

3.46 jitter amplitude: The variation in the timing of one clock transition relative to that of the preceding transition, expressed as a percentage of the mean interval between the clock transitions.

3.47 jitter rate: The rate of change of the jitter amplitude expressed in hertz.

3.48 overbias: When the bias current is continuously increased from an initial low level while recording a relatively long wavelength signal on tape, the reproduce output first increases with increasing bias until it reaches a maximum, after which further increases in bias cause a reduction in output. A typical bias adjustment procedure involves finding the level corresponding to maximum (or peak) output and then increasing the bias to cause a specified reduction in reproduce amplitude where the amount of this reduction, usually expressed in decibels, is known as the amount of overbias.

3.49 overhead bits: Bits added to the bit stream to facilitate the transmission and recovery of the bit

Copyright International Organization for Standardization
Provided by IHS under license with ISO
No reproduction or networking permitted without license from IHS
Not for Resale

stream (e.g. frame synchronization words, check bits).

3.50 parallel HDDR: The recording of multiple PCM data streams that are synchronous to a common clock on multitrack recorders/reproducers so that synchronization can be restored at playback.

3.51 pseudorandom sequences/patterns: Repeating sequences exhibiting many of the statistical properties of uniformly distributed random number sequences.

3.52 pulse code modulation (PCM): A modulation method in which information to be recorded is encoded into digital symbols (see 3.21 and figure A.1).

3.53 reference edge: The edge of the tape nearest to track 1 (see figure 3).

3.54 reference track location (G): Location of the centreline of track 1 relative to the reference edge of the tape (see figure 3).

3.55 signal-to-noise ratio (SNR): The ratio of signal power to noise power, expressed in decibels.

3.56 single track serial HDDR: The recording of one or more digital data streams on to a single recording track.

3.57 synchronization word: A fixed pattern of bits inserted in a digital bit stream to synchronize the frame synchronizer.

3.58 synchronous: Having the same rate and phase.

3.59 tape skew: Motion of tape such that the tape tracks are not perpendicular to the gap centre line. Skew can have both static and dynamic components (see 3.10, 3.11 and 3.12).

3.60 tape speed, actual (v_{act}): The tape speed during recording and reproducing.

NOTE 11 In general, the actual tape speed will not be equal to the nominal tape speed (see 4.2.1).

3.61 tape speed, effective (v_{eff}): The tape speed corrected for the effects on the tape of operating conditions, i.e. tensile force, tape materials, thickness, and environment (temperature and humidity).

3.62 tape speed, nominal (v): A set of defined nominal tape speeds for tapes operating at the reference tensile force (see 4.4.7), and in standard test environmental conditions of 23 °C ± 3 °C (+ 73 °F ± 5 °F) and relative humidity 45 % to 55 %.

3.63 tape speed error: Departure of the average speed from the nominal value.

3.64 tape tensile force: The tensile force applied to the tape during operation.

NOTE 12 The value of this tensile force is not necessarily equal to the reference tensile force.

3.65 track location (H_n): The distance from the centreline of the reference track to the centreline of the recorded track location, (n) (see figure 3).

3.66 track numbering: The consecutive numbering of tracks, starting with track 1, from top to bottom, when viewing the magnetic surface on the tape with the earlier portion of the recorded signal to the observer's right (see figure 3).

3.67 track spacing (D): The centre-to-centre distance between adjacent recorded tracks (see figure 3).

3.68 track width (W): The mechanical width of the common interface of the record head segment at the gaps (see figure 1).

NOTE 13 This does not include the effects of fringing fields which will tend to increase the recorded track width by a small amount (see figure 1 and figure 3).

4 Recording and reproducing characteristics

4.1 General

This clause defines those tape and recorder/reproducer characteristics required to ensure successful interchange, so that tapes recorded on one machine at one facility may be successfully reproduced on another machine of like design at another facility. Test procedures for magnetic tape recording/reproducing equipment are given in ISO 6068:1985, annex A.

The physical properties of the tape are specified in ISO/IEC 8441-1.

4.2 Tape speeds

4.2.1 Tape speed

The record tape speed shall be in the range of 23,8 mm/s (15/16 in/s) to 6 096 mm/s (240 in/s). It shall be appropriate for the input data rate so that the flux transition density on tape is within the limit imposed by table A.1 for the performance category of the system concerned. The reproduce tape speed may be adjusted to obtain the desired output data rate. Tape speed should be a matter of agreement between the interchange parties. Table 7 lists nominal recording tape speeds and the associated flux transition density limits.

Copyright International Organization for Standardization
Provided by IHS under license with ISO
No reproduction or networking permitted without license from IHS
Not for Resale

4.2.2 Effective tape speed

The effective tape speed (v_{eff}) throughout a reel (in the absence of tape-derived servo speed control) shall be within ± 0,5 % of each of the nominal tape speeds given in table 7 which are provided for by the recorder/reproducer.

4.2.3 Pulse-to-pulse jitter

4.2.3.1 Intratrack. On any track, the pulse-to-pulse jitter (0 to peak units) plotted against pulse-to-pulse interval (in the absence of tape-derived speed control) shall have a slope less than 0,2 % at every speed listed in table 7 which is provided for by the recorder/reproducer.

NOTE 14 Recommended methods for measuring pulse-to-pulse jitter are given in ISO 6068:1985, annex A.

4.2.3.2 Intertrack. Between any pair of adjacent tracks on the same head, the intertrack pulse-to-pulse jitter (0 to peak units) plotted against pulse-to-pulse interval (in the absence of tape-derived speed control) shall have a slope less than 0,4 % at all effective tape speeds as 4.2.2. The effects of skew can be added, provided dynamic skew and static skew limits in this part of ISO/IEC 8441 are not exceeded.

4.2.3.3 With tape-derived speed control. With tape-derived speed control, the intertrack and intratrack pulse-to-pulse jitter values shall not exceed twice the values given in 4.2.3.2 and 4.2.3.1, respectively.

4.3 Track configurations

Head mechanical parameters shall be as shown in figure 1. Track configurations shall be as shown in figure 2 for an *n*-track interlaced head, and the recorded tape format shall be as shown in figure 3 with dimensions given in the applicable table 1 to table 6.

NOTE 15 Although a tape reference edge is stated, edge guiding of the tape is not an implied requirement of the recorder/reproducer.

The head spacing for adjustable heads refers to equipment having facilities for adjusting the azimuth of reproduce heads; these facilities are required for high density digital recorders/reproducers in category C and possibly category B (see annex A).

NOTE 16 For cross-play enhancement, it may be beneficial to adjust the record head azimuth against a recorded reference tape aligned to the reproduce systems.

4.4 Recorder/reproducer characteristics

4.4.1 Data scatter

The maximum data scatter shall be as follows:

Tape width	Maximum data scatter
12,7 mm (0,5 in)	2,54 μm (100 μin)
25,4 mm (1,0 in)	5,08 μm (200 μin)
50,8 mm (2,0 in)	10,16 μm (400 μin)

4.4.2 Data azimuth (static)

Data azimuth (static) shall not be greater than ± 0,3 mrad (± 1′).

4.4.3 Data azimuth (dynamic)

Data azimuth (dynamic) shall not be greater than ± 0,3 mrad (± 1′) as determined from measurements of the dynamic interchannel time displacement error (ITDE) between outer tracks on the same head. The method for the measurement of ITDE shall be in accordance with ISO 6068.

4.4.4 Individual track data azimuth difference

The maximum signal loss due to the individual track data azimuth differences shall not be greater than 1 dB (excluding reproduce head error) at the shortest wavelength specified by the manufacturer of the equipment. The overall record/reproduce error shall not be greater than 2 dB.

4.4.5 Head tilt

Head tilt shall not be greater than ± 0,3 mrad (± 1′) (see figure 1).

4.4.6 Head polarity

4.4.6.1 Record side. Some recording codes require that the recording and reproduce polarities bear a known relationship to each other for correct decoding. To maintain signal polarity from record to playback it is required that an isolated false-to-true level transition, followed by a return to the quiescent false level, at the encoder output be recorded as a south-north north-south flux transition sequence on tape. Likewise, the passage of such an isolated south-north north-south flux transition sequence past the reproduce head shall cause a positive-going output pulse to appear at the input to the decoder.

NOTE 17 Details as to how to establish known polarity flux transitions on tape will be found in ISO 6068:1985, annex A .

Copyright International Organization for Standardization
Provided by IHS under license with ISO
No reproduction or networking permitted without license from IHS
Not for Resale

4.4.6.2 Reproduce side. Each reproduce head winding shall be connected to its respective amplifier in such a manner that a segment of tape exhibiting a south-north north-south transition pattern will produce a positive-going pulse, with respect to system ground, at the output of the reproduce amplifier.

4.4.7 Reference tensile force

The reference tensile force shall be 0,109 N/mm (10 ozf/in) of tape width. For ideal interchange, recorder/reproducer operating tape tensile forces should be equal to the reference tensile force; as the operating tensile force departs from the reference tensile force, the corrections applied to make the effective tape speed (v_{eff}) equal to the nominal tape speed (v) become increasingly unreliable due to nonlinearities, etc.

4.5 Other characteristics

Requirements for other characteristics are not stated in this part of ISO/IEC 8441 since they depend on the intended application, but recommended test methods for measuring such characteristics are given in ISO 6068:1985, annex A.

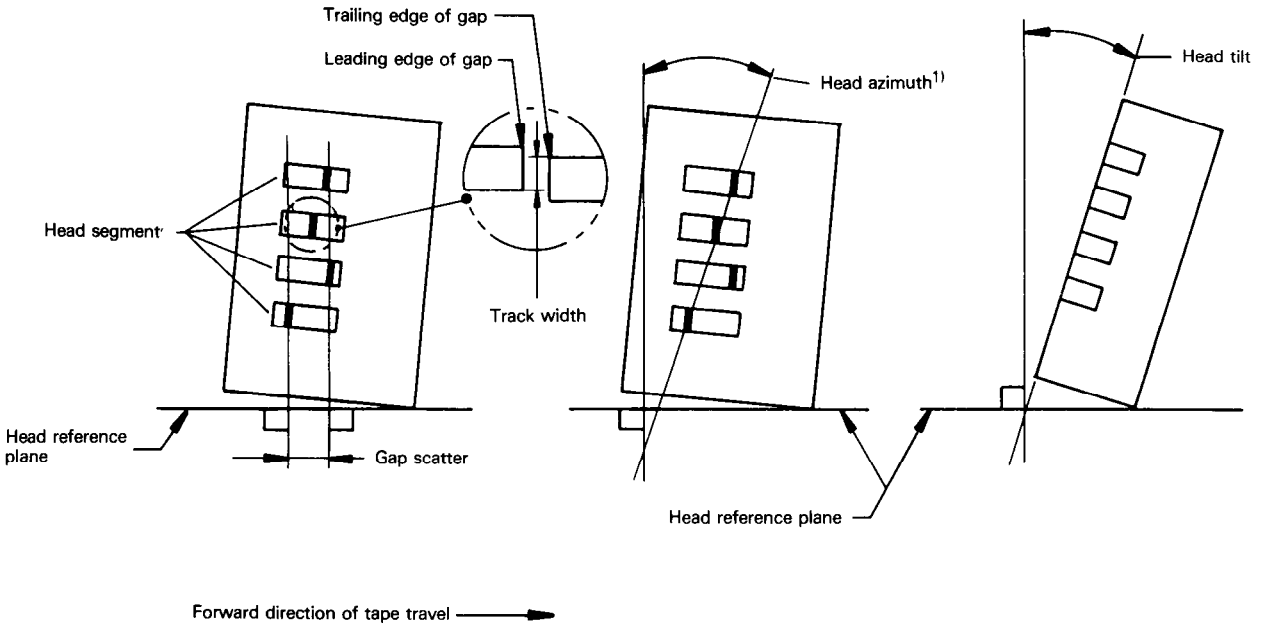

1) The head azimuth line passes through the gap centres of the two outside tracks.

Figure 1 — Head mechanical parameters

Copyright International Organization for Standardization
Provided by IHS under license with ISO
No reproduction or networking permitted without license from IHS
Not for Resale

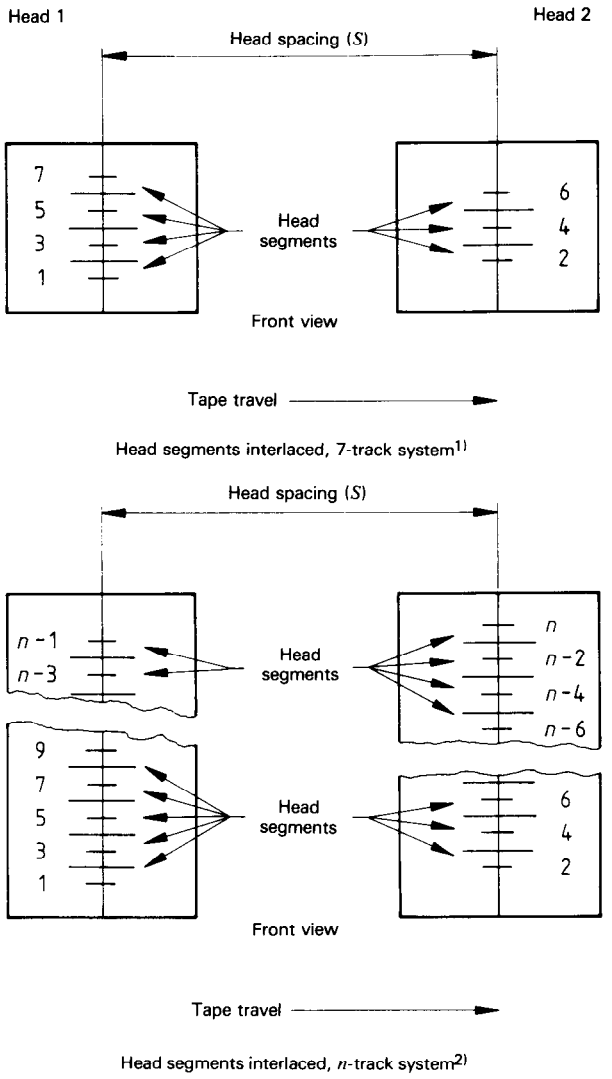

1) For 7-track systems, head segments 1, 3, 5 and 7 are in head 1, and head segments 2, 4 and 6 are in head 2.

2) For formats listed in table 3 to table 7, head segments n-1, n-3, etc. are in head 1, and head segments n, n-2, etc. are in head 2.

Figure 2 — 7-track and n-track systems with head segments interlaced

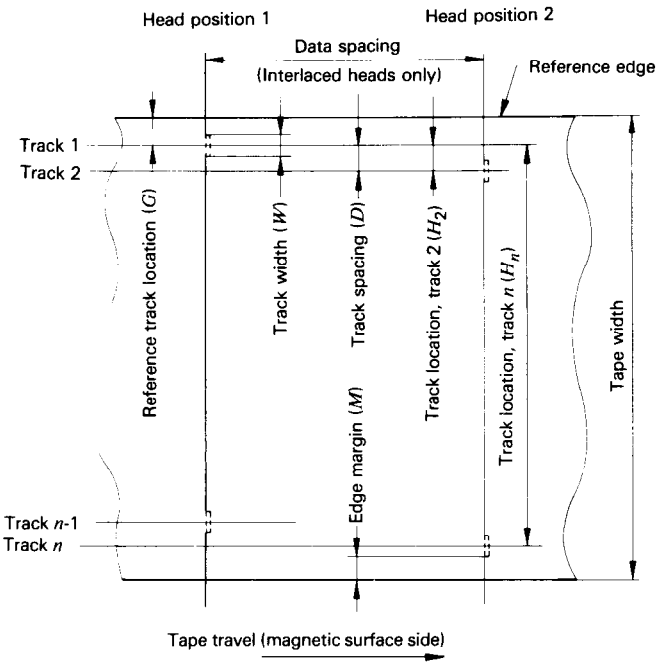

1) For an in-line format all tracks are in head position 1.

2) For interlaced formats, tracks 1 to n-1 are in head position 1, and tracks 2 to n are in head position 2.

3) For 7-tracks (3 + 4) interlaced formats, track 7 is n.

Figure 3 — Recorded tape format

Copyright International Organization for Standardization
Provided by IHS under license with ISO
No reproduction or networking permitted without license from IHS
Not for Resale

Table 1 — Dimensions for recorded tape format, 7 tracks interlaced on 12,7 mm (0,5 in) wide tape (see figure 3)

Dimensions	Millimetres		Inches
	max.	min.	
Track width (W)	1,40	1,14	0,050 ± 0,005
Track spacing (D)	1,778		0,070
Head spacing (S)			
Fixed heads	38,125	38,075	1,500 ± 0,001
Adjustable heads	38,151	38,049	1,500 ± 0,002
Edge margin, minimum (M_m)	0,127		0,005
Reference track location (G)	1,067	0,965	0,040 ± 0,002
Track location tolerance (H_n)	0,051	− 0,051	0 ± 0,002
Track number	Location for nth (H_n) track		
	Millimetres		**Inches**
	max.	min.	
1 (Reference)	0	0	0
2	1,829	1,727	0,070
3	3,607	3,505	0,140
4	5,383	5,283	0,210
5	7,163	7,061	0,280
6	8,941	8,839	0,350
7	10,719	10,617	0,420

Copyright International Organization for Standardization
Provided by IHS under license with ISO
No reproduction or networking permitted without license from IHS
Not for Resale

Table 2 — Dimensions for recorded tape format, 14 tracks interlaced on 12,7 mm (0,5 in) wide tape (see figure 3)

Dimensions	Millimetres		Inches
	max.	min.	
Track width (W)	0,660	0,610	0,025 ± 0,001
Track spacing (D)	0,889		0,035
Head spacing (S)			
Fixed heads	38,125	38,075	1,500 ± 0,001
Adjustable heads	38,151	38,049	1,500 ± 0,002
Edge margin, minimum (M_m)	0,127		0,005
Reference track location (G)	0,546	0,470	0,020 0 ± 0,001 5
Track location tolerance (H_n)	0,038	− 0,038	0 ± 0,001 5
Track number	Location for nth (H_n) track		
	Millimetres		**Inches**
	max.	min.	
1 (Reference)	0	0	0
2	0,927	0,851	0,035
3	1,816	1,740	0,070
4	2,705	2,629	0,105
5	3,594	3,518	0,140
6	4,483	4,407	0,175
7	5,372	5,296	0,210
8	6,261	6,185	0,245
9	7,150	7,074	0,280
10	8,039	7,963	0,315
11	8,928	8,852	0,350
12	9,817	9,714	0,385
13	10,706	10,630	0,420
14	11,595	11,519	0,455

Copyright International Organization for Standardization
Provided by IHS under license with ISO
No reproduction or networking permitted without license from IHS
Not for Resale

Table 3 — Dimensions for recorded tape format, 14 tracks interlaced on 25,4 mm (1 in) wide tape (see figure 3)

Dimensions	Millimetres		Inches
	max.	min.	
Track width (W)	1,40	1,14	0,050 ± 0,005
Track spacing (D)	1,778		0,070
Head spacing (S)			
Fixed heads	38,125	38,075	1,500 ± 0,001
Adjustable heads	38,151	38,049	1,500 ± 0,002
Edge margin, minimum (M_m)	0,279		0,011
Reference track location (G)	1,168	1,067	0,044 ± 0,002
Track location tolerance (H_n)	0,051	− 0,051	0 ± 0,002
Track number	Location for nth (H_n) track		
	Millimetres		**Inches**
	max.	min.	
1 (Reference)	0	0	0
2	1,829	1,727	0,070
3	3,607	3,505	0,140
4	5,385	5,283	0,210
5	7,163	7,061	0,280
6	8,941	8,839	0,350
7	10,719	10,617	0,420
8	12,497	12,395	0,490
9	14,275	14,713	0,560
10	16,053	15,951	0,630
11	17,831	17,729	0,700
12	19,609	19,507	0,770
13	21,387	21,285	0,840
14	23,165	23,063	0,910

Copyright International Organization for Standardization
Provided by IHS under license with ISO
No reproduction or networking permitted without license from IHS
Not for Resale

Table 4 — Dimensions for recorded tape format, 28 tracks interlaced on 25,4 mm (1 in) wide tape (see figure 3)

Dimensions	Millimetres		Inches
	max.	min.	
Track width (W)	0,660	0,610	0,025 ± 0,001
Track spacing (D)	0,89		0,035
Head spacing (S)			
Fixed heads	38,125	38,075	1,500 ± 0,001
Adjustable heads	38,151	38,049	1,500 ± 0,002
Edge margin, minimum (M_m)	0,229		0,009
Reference track location (G)	0,698	0,662	0,026 0 ± 0,001 5
Track location tolerance (H_n)	0,038	− 0,038	0 ± 0,001 5
Track number	Location for nth (H_n) track		
	Millimetres		**Inches**
	max.	min.	
1 (Reference)	0	0	0
2	0.927	0,851	0,035
3	1,816	1,740	0,070
4	2,705	2,629	0,105
5	3,594	3,518	0,140
6	4,483	4,407	0,175
7	5,372	5,296	0,210
8	6,261	6,185	0,245
9	7,150	7,074	0,280
10	8,039	7,963	0,315
11	8,928	8,852	0,350
12	9,817	9,741	0,385
13	10,706	10,630	0,420
14	11,595	11,519	0,455
15	12,484	12,408	0,490
16	13,373	13,297	0,525
17	14,262	14,186	0,560
18	15,151	15,075	0,595
19	16,040	15,964	0,630
20	16,929	16,853	0,665
21	17,818	17,742	0,700
22	18,707	18,631	0,735
23	19,596	19,520	0,770
24	20,485	20,409	0,805
25	21,374	21,298	0,840
26	22,263	22,187	0,875
27	23,152	23,076	0,910
28	24,041	23,965	0,945

Copyright International Organization for Standardization
Provided by IHS under license with ISO
No reproduction or networking permitted without license from IHS
Not for Resale

Table 5 — Dimensions for recorded tape format, 42 tracks interlaced on 25,4 mm (1 in) wide tape (see figure 3)

Dimensions	Millimetres		Inches
	max.	min.	
Track width (W)	0,483	0,432	0,018 ± 0,001
Track spacing (D)	0,584		0,023
Head spacing (S)			
Fixed heads	38,125	38,075	1,500 ± 0,001
Adjustable heads	38,151	38,049	1,500 ± 0,002
Edge margin, minimum (M_m)	0,305		0,012
Reference track location (G)	0,737	0,660	0,027 5 ± 0,001 5
Track location tolerance (H_n)	0,025	− 0,025	0 ± 0,001
Track number	Location for nth (H_n) track		
	Millimetres		**Inches**
	max.	min.	
1 (Reference)	0	0	0
2	0,610	0,559	0,023
3	1,194	1,143	0,046
4	1,778	1,727	0,069
5	2,362	2,311	0,092
6	2,946	2,896	0,115
7	3,531	3,480	0,138
8	4,115	4,064	0,161
9	4,699	4,648	0,184
10	5,283	5,232	0,207
11	5,867	5,817	0,230
12	6,452	6,401	0,253
13	7,036	6,985	0,276
14	7,620	7,569	0,299
15	8,204	8,153	0,322
16	8,788	8,738	0,345
17	9,373	9,322	0,368
18	9,957	9,906	0,391
19	10,541	10,490	0,414
20	11,125	11,074	0,437
21	11,709	11,659	0,460
22	12,294	12,243	0,483
23	12,878	12,827	0,506
24	13,462	13,411	0,529
25	14,046	13,995	0,552
26	14,630	14,580	0,575
27	15,215	15,164	0,598
28	15,799	15,748	0,621
29	16,383	16,332	0,644
30	16,967	16,916	0,667
31	17,551	17,501	0,690
32	18,136	18,085	0,713
33	18,720	18,669	0,736
34	19,304	19,253	0,759
35	19,888	19,837	0,782
36	20,472	20,422	0,805
37	21,057	21,006	0,828
38	21,641	21,590	0,851

Copyright International Organization for Standardization
Provided by IHS under license with ISO
No reproduction or networking permitted without license from IHS
Not for Resale

Track number	Location for nth (H_n) track		
	Millimetres		Inches
	max.	min.	
39	22,225	22,174	0,874
40	22,809	22,758	0,897
41	23,393	23,344	0,920
42	23,978	23,927	0,943

Table 6 — Dimensions for recorded tape format, 84 tracks interlaced on 50,8 mm (2 in) wide tape (see figure 3)

Dimensions	Millimetres		Inches
	max.	min.	
Track width (W)	0,483	0,432	0,018 ± 0,001
Track spacing (D)	0,584		0,023
Head spacing (S)			
Fixed heads	38,125	38,075	1,500 ± 0,001
Adjustable heads	38,151	38,049	1,500 ± 0,002
Edge margin, minimum (M_m)	0,711		0,028
Reference track location (G)	1,168	1,092	0,044 5 ± 0,001 5
Track location tolerance (H_n)	0,025	− 0,025	0 ± 0,001

Track number	Location for nth (H_n) track		
	Millimetres		Inches
	max.	min.	
1 (Reference)	0	0	0
2	0,610	0,559	0,023
3	1,194	1,143	0,046
4	1,778	1,727	0,069
5	2,362	2,311	0,092
6	2,946	2,896	0,115
7	3,531	3,480	0,138
8	4,115	4,064	0,161
9	4,699	4,648	0,184
10	5,283	5,232	0,207
11	5,867	5,817	0,230
12	6,452	6,401	0,253
13	7,036	6,985	0,276
14	7,620	7,569	0,299
15	8,204	8,153	0,322
16	8,788	8,738	0,345
17	9,373	9,322	0,368
18	9,957	9,906	0,391
19	10,541	10,490	0,414
20	11,125	11,074	0,437
21	11,709	11,659	0,460
22	12,294	12,243	0,483
23	12,878	12,827	0,506
24	13,462	13,411	0,529
25	14,046	13,995	0,552

Copyright International Organization for Standardization
Provided by IHS under license with ISO
No reproduction or networking permitted without license from IHS
Not for Resale

Track number	Location for nth (H_n) track		
	Millimetres		Inches
	max.	min.	
26 (Reference)	14,630	14,580	0,575
27	15,215	15,164	0,598
28	15,799	15,748	0,621
29	16,383	16,332	0,644
30	16,967	16,916	0,667
31	17,551	17,501	0,690
32	18,136	18,085	0,713
33	18,720	18,669	0,736
34	19,304	19,253	0,759
35	19,888	19,837	0,782
36	20,472	20,422	0,805
37	21,057	21,006	0,828
38	21,641	21,590	0,851
39	22,225	22,174	0,874
40	22,809	22,758	0,897
41	23,393	23,344	0,920
42	23,978	23,927	0,943
43	24,562	24,511	0,966
44	25,146	25,095	0,989
45	25,730	25,679	1,012
46	26,314	26,264	1,035
47	26,899	26,848	1,058
48	27,483	27,432	1,081
49	28,067	28,016	1,104
50	28,651	28,600	1,127
51	29,235	29,185	1,150
52	29,820	29,769	1,173
53	30,404	30,353	1,196
54	30,988	30,937	1,219
55	31,572	31,521	1,242
56	32,156	32,106	1,265
57	32,741	32,690	1,288
58	33,325	33,274	1,311
59	33,909	33,858	1,334
60	34,493	34,442	1,357
61	35,077	35,027	1,380
62	35,662	35,611	1,403
63	36,246	36,195	1,426
64	36,830	36,779	1,449
65	37,414	37,363	1,472
66	37,998	37,948	1,495
67	38,583	38,532	1,518
68	39,167	39,116	1,541
69	39,751	39,700	1,564
70	40,335	40,284	1,587
71	40,919	40,869	1,610
72	41,504	41,453	1,633
73	42,088	42,037	1,656
74	42,672	42,621	1,679
75	43,256	43,205	1,702
76	43,840	43,790	1,725
77	44,425	44,374	1,748
78	45,009	44,958	1,771
79	45,593	45,542	1,794
80	46,177	46,126	1,817
81	46,761	46,711	1,840
82	47,346	47,295	1,863
83	47,930	47,879	1,886
84	48,514	48,463	1,909

Copyright International Organization for Standardization
Provided by IHS under license with ISO
No reproduction or networking permitted without license from IHS
Not for Resale

5 Methods for high density digital recording

5.1 Introduction

Although bilevel digital signals may be successfully recorded by many different methods, only those methods which simultaneously maximize throughput rate and bit packing density, while minimizing recorder/reproducer bandwidth, are included in this part of ISO/IEC 8441. Users should match environment, application, and choice of hardware to the code selected (see clause A.2).

5.2 Record transfer function

5.2.1 General

In high density digital recording, where special coding and/or electronics are employed to minimize the effects of long periods without flux transitions, the preservation of a linear amplitude characteristic is not essential, and bilevel signals may be recorded with or without the use of high frequency bias. The record head driving amplifier shall provide a transfer characteristic that is basically a constant record current characteristic, upon which is superimposed a compensation versus frequency characteristic to compensate only for the loss of record head efficiency.

5.2.2 Recording with bias

Bilevel signals may be recorded with linear analogue recording techniques that use high frequency bias. When bias is used, the bias frequency shall be at least 3,5 times the highest recording channel signal frequency for which the recorder/reproducer system is designed. The bias should contain no even harmonics that produce unequal positive and negative peaks of the bias current. Such asymmetry will produce a d.c. component that causes noise. The input electrical signal is delivered to the record head in essentially unaltered form.

5.2.2.1 Setting up. Best results are typically obtained as follows:

a) The recording signal used may be a sinusoidal waveform or a square waveform. It may be practicable to obtain a suitable square waveform from the data encoder. The frequency shall correspond to the maximum transition rate applicable to the data representation, on the basis that two flux transitions are recorded in each period of the waveform.

b) The record level used for final bias adjustment shall correspond to the normal recording level when the record amplifier is driven by the encoder. If record level is monitored by an rms-reading meter on the reproduce output, the record level for a sine wave shall be set 4 dB below that obtained using square wave drive from the encoder, to compensate for the difference in the rms and peak values of the two waveforms. If a square waveform is used for setting up, this difference does not apply.

5.2.3 Recording without bias

Bilevel signals may be recorded directly on tape without the use of high frequency bias. Optimum pulse response resolution is usually obtained with a record current setting that limits the penetration of the recording head flux into the magnetic tape coating to a depth rather less than the coating thickness.

NOTE 18 Best results are often obtained by setting the record current amplitude to the level giving maximum reproduce head output at a signal frequency corresponding to the frequency associated with the maximum transition rate applicable to the data bit representation. In some systems, however, it may be advantageous to underrecord by up to 2 dB. The record signal used to set record current gain shall be a single frequency square wave at a level equal to the peak-to-peak amplitude of the bilevel data source.

5.3 Flux transition densities and rates for high density recording

The packing density on every track as recorded on tape, and including any overhead bits, shall lie between the limits

0,590 kt/mm (15 kt/in) min.

1,312 kt/mm (33,3 kt/in) max.

See table 7 for maximum and minimum on-tape per track transition rates versus standard tape speeds.

Table 7 — Maximum/minimum transition rates

Nominal tape speed		Transition rate (kt/s)	
mm/s	(in/s)	min.[1]	max.[1]
6 096,0	(240)	3 600,0	8 000,0
3 048,0	(120)	1 800,0	4 000,0
1 524,0	(60)	900,0	2 000,0
762,0	(30)	450,0	1 000,0
381,0	(15)	225,0	500,0
190,5	(7,5)	112,5	250,0
95,2	(3,75)	56,25	125,0
47,6	(1,875)	28,125	62,5
23,8	(0,937 5)	14,067 5	31,25

1) Corresponding to density limits in 5.3.

Copyright International Organization for Standardization
Provided by IHS under license with ISO
No reproduction or networking permitted without license from IHS
Not for Resale

5.4 Data input/output

5.4.1 General

Input and output digital data shall be NRZ-level coded with accompanying synchronous clock. The clock shall have a duty cycle of 50 % $\pm$ 5 %, and the positive-going transition shall occur within 3 % of the beginning of the data bit period. The clock jitter rate shall not exceed that of the bit rate.

NOTE 19 Other data representations may be used subject to agreement between the interchange parties.

5.4.2 Accuracy and stability

5.4.2.1 Long-term. Whenever useful data is being transferred, the input bit rate shall not differ from the specified nominal bit rate by more than 1 % of the nominal rate.

5.4.2.2 Short-term (bit jitter). It is desirable that any data input or output transition occurring in an interval, P, shall occur within 0,1 bit period of the time at which it is expected to occur, as determined during the preceding interval, P, where P is the measured time for 30 data bit periods.

5.5 Data sense

Normal data input and output polarities shall follow the "positive true" logic convention; the relatively high voltage level denoting "logic 1" and the relatively low voltage level "logic 0". It is desirable that the HDDR system has the capability to invert the data sense (i.e. complement the data) at inputs and outputs. If this facility is not provided, the same sense shall prevail at input(s) and output(s).

PCM codes such as M^2 and 3PM are tape flux polarity independent.

Other codes considered in this part of ISO/IEC 8441, such as ENRZ, RNRZ, and PROP are tape flux polarity dependent. Systems using such codes shall be arranged so that a data input transition to logic 1 writes a south-north transition on tape. Also a positive true logic convention shall be applied to the interpretation of the code description in this part of ISO/IEC 8441, annex A and annex B.

5.6 Reproduce equalization

5.6.1 General

The capability shall be provided to reproduce data recorded either with or without bias. Passband equalization characteristics for either of these modes are essentially the same.

5.6.2 Resolution of equalization

The resolution of equalization adjustments, particularly the phase adjustment, shall provide the capability of adjusting for optimum eye-pattern, as evidenced by negligible zero-level cross-over displacement and adequate "eye" amplitude opening peaks, with a nondivergent series of adjustments.

5.6.3 Range of equalization adjustment

The range of equalization of the amplitude and phase responses shall be adequate to obtain eye patterns having characteristics such as a) and b) below, at densities up to 1,312 kt/mm (33,33 kt/in) using tapes conforming to ISO/IEC 8441-1 at all forward and reverse speeds for which the recorder/reproducer is designed:

a) **Amplitude criteria:** The amplitude variation between the low frequencies and the high frequencies of the code used shall be less than 6 dB for the nominal speeds listed in table 7 which are available on the recorder concerned.

b) **Phase criteria:** The zero axis cross-over time displacements shall be less than one-tenth of a bit cell time using a 2 047-bit pseudorandom pattern of NRZ-L recorded on tape at tape speeds as a).

5.6.4 Tape speed compatibility

It shall be possible to record at any of the nominal speeds listed in table 7 and reproduce at the same or any other nominal speed listed in table 7, subject only to the speed being available on the recorder and reproducer concerned.

5.6.5 Signal-to-noise ratio (SNR)

Reproduce peak signal to rms noise shall be at least 20 dB at any nominal speed listed in table 7 which is available on the reproducer.

Copyright International Organization for Standardization
Provided by IHS under license with ISO
No reproduction or networking permitted without license from IHS
Not for Resale

5.7 Other system parameters

A number of other parameters affecting system performance, such as crosstalk, are not stated in this part of ISO/IEC 8441 since they depend on the intended application, but recommended test methods for measuring such parameters are given in ISO 6068:1985, annex A.

5.8 Auxiliary data recording

It is recommended that auxiliary data be recorded on edge tracks, and the centre tracks reserved for high density digital data which is sensitive to tape edge damage and slitting debris. For recommended auxiliary data recording methods (i.e. analogue, etc.), see ISO 6068.

Copyright International Organization for Standardization
Provided by IHS under license with ISO
No reproduction or networking permitted without license from IHS
Not for Resale

Annex A
(informative)

Operating modes, performance categories, and cross-play criteria for high density PCM recording systems

A.1 Performance categories

A.1.1 General

The three performance categories of high density PCM recording covered in this part of ISO/IEC 8441 are as follows:

NOTE 20 For the purpose of the following paragraphs the term "wideband recorder/reproducer" means a recorder/reproducer with a direct mode bandwidth of 2 MHz at 3,048 m/s (120 in/s) tape speed.

a) **Category A:** This category covers single track serial high density PCM recording using any of the track formats of table 3 to table 6 on wideband recorder/reproducers adjusted for analogue service as described in A.2.1, and using record gap lengths as specified in A.1.2. Upper limit packing densities are specified in A.2.1.3.

b) **Category B:** This category covers single track serial or parallel high density PCM recording using any of the track formats in table 3 to table 5 on wideband recorder/reproducers adjusted for optimal digital service as 5.2.2 using bias, or as 5.2.3 using nonbias recording techniques. The record gap lengths shall be as specified in A.1.2. Interchange parties should be aware that fine adjustment of the reproducing machine may be necessary for optimum playback of a particular tape, since this category allows recording with and without bias, together with the inevitable tolerances in record gap lengths and magnetic tape properties.

c) **Category C:** This special category covers parallel high density PCM recording performance using special wideband recorder/reproducers equipped with record gap lengths as described in A.1.3, and special digital electronics using nonbias recording as described in 5.2.3. For this category the full range of packing densities (i.e. flux transitions per unit track length) may be used.

See table A.1 for a summary of performance category versus important recording parameters.

Table A.1 — Summary of record parameters for Categories A, B and C

Recording parameter	Performance category
Track densities, 25,4 mm (1,0 in) in tape	
14, 28 and 42 tracks	A, B, C
Data configuration	
Serial PCM	A, B, C
Parallel PCM	B, C
Packing densities	
0,6 kt/mm to 1,0 kt/mm (15 kt/in to 25 kt/in) or 1,3 kt/mm (33 kt/in) with interchange agreement	A, B
0,6 kt/mm to 1,3 kt/mm (15 kt/in to 33 kt/in)	C
Adjustment between routine maintenance	
No adjustment after normal set up	A, C
Fine adjustment allowed for individual tape reproduce	B
Fine adjustment allowed for tape type and record mode	B, C
Record gap length	
1,7 µm to 2,7 µm (85 µin ± 20 µin)	A, B
0,51 µm to 0,76 µm (20 µin ± 5 µin)	C
Record mode	
With bias	A, B
Without bias	B, C

A.1.2 Record head gap length for category A and category B performance

For serial high density PCM recording, with or without intermixed direct or wideband-II recording, the record head gap length shall be 2,2 µm ± 0,5 µm (85 µin ± 20 µin). Interchange parties should determine that record gaps are compatible with the reproduce systems to be used.

A.1.3 Record head gap length for category C performance

For parallel high density PCM recording the recommended gap length to achieve category C performance is 0,51 µm ± 0,13 µm (20 µin ± 5 µin).

Copyright International Organization for Standardization
Provided by IHS under license with ISO
No reproduction or networking permitted without license from IHS
Not for Resale

A.1.4 Operating modes

HDDR systems should be capable of operating in one or more of the following modes:

a) **Parallel digital data mode:** The HDDR accepts an input consisting of multiple digital bilevel data streams with an accompanying synchronous common clock. Each input stream is processed by individual track formatting logic channels that modify these data streams as necessary for recording to permit resynchronization and realignment on replay, whether at the recording rate or a different rate. Such modification may include adding synchronizing and error detection/correction bits. The addition of these overhead bits implies that the recorded bit rate is higher than the input bit rate. HDDR systems should be capable of accepting continuous streams of input data at the maximum specified input rate for the selected tape speed. Any input buffering necessary to accommodate the different input and tape clock rates shall be included in the HDDR system. Similarly, the reproduce channels shall include any buffering necessary to accommodate clocking overhead bits off tape and stripping them from the output data stream, which should be a replica of the input data, excluding the effect of any difference between record and replay tape speeds.

b) **Serial to parallel digital data mode:** The HDDR accepts a single input bilevel digital data stream with accompanying synchronous clock at rates exceeding the capability of a single recording track. This single serial input data stream is distributed (i.e. demultiplexed) to a selectable number of parallel digital track formatting logic channels for recording. During the reproduction process, the data from tape shall be resynchronized, the overhead bits removed, and the parallel data streams multiplexed to form a replica of the input stream with accompanying clock. The input and output data rates shall be in the same ratio as the record and replay tape speeds.

c) **Single track serial data mode:** The HDDR accepts a single input bilevel digital data stream with accompanying clock at a rate which is within the capability of a single recording track. The HDDR system may have the capability to accept more than one such data stream, but each data stream shall be accompanied by its own synchronous clock which may or may not be at the same rate as another input data stream.

d) **Error detection and correction (EDAC):** The HDDR system includes special coding and decoding electronics which detect and correct many data bit errors that would otherwise result from magnetic tape flaws and other causes during the record and reproduction processes.

e) **Auxiliary channels:** The HDDR system provides the capability to record and reproduce auxiliary or housekeeping signals such as servo speed reference, analogue direct, FM, or low rate PCM. This capability may be provided by the analogue accessories of the basic transport used to implement the HDDR system. It is recommended that auxiliary channels be relegated to the tape edge track(s), saving the more secure middle tracks for HDDR service.

f) **Reverse playback:** The HDDR system may provide the capability to reproduce data with tape motion in the opposite direction from that used for recording.

A.2 Single track serial high density recording

[See A.1.4 c).]

A.2.1 Serial high density recording with wideband analogue recorder/reproducer (category A)

A.2.1.1 General

This clause defines performance levels for direct recording of PCM data using wideband [2 MHz at 3,048 m/s (120 in/s)] analogue recorder/reproducers.

A.2.1.2 Recording set-up parameters

A.2.1.2.1 The rms analogue recording level shall be set to produce 1 % third harmonic distortion of the record level set frequency at 2 dB over-bias. The record level set frequency shall be one-tenth of the upper band-edge frequency.

A.2.1.2.2 The peak-to-peak level of PCM input signal shall be set to twice the rms level used to establish the analogue record level with a tolerance of $\pm$ 25 %.

A.2.1.2.3 The PCM signal to be recorded shall be in bilevel form. A signal containing noise shall be converted to bilevel form (i.e. encoded before recording).

A.2.1.3 PCM codes and packing densities for category A

The recommended PCM codes for category A (see A.1.1 are randomized nonreturn to zero-level (RNRZ-L), Yϕ, and Biϕ-L. The resulting on-tape rec-

Copyright International Organization for Standardization
Provided by IHS under license with ISO
No reproduction or networking permitted without license from IHS
Not for Resale

ommended maximum bit packing density is 984 bit/mm (25 kbit/in) for RNRZ. The resulting on-tape recommended maximum bit packing density is 490 bit/mm (12,5 kbit/in) for Biϕ-L.

To minimize baseline wander anomalies, RNRZ-L is not recommended if the reproduce bit rate will be less than 200 kbit/s. PCM code definitions for NRZ-L and Biϕ-L are given in figure A.1.

A.2.1.4 Serial PCM codes for category B

The recommended PCM codes for high density serial recording in this category are

a) randomized NRZ-L (RNRZ-L);

b) enhanced NRZ-L (RNRZ-L);

c) Miller squared (M^2);

d) 3-position modulation (3PM).

For brief descriptions of these codes see figure A.1.

A.2.1.5 PCM system tests

For information on system test methods, see ISO 6068, annex A.

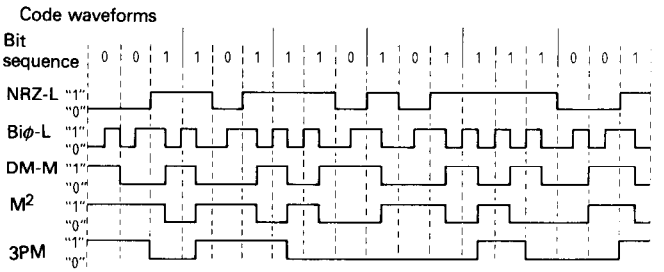

Legend

NRZ-L A "one" is represented by the "1" level for the bit cell period.
A "zero" is represented by the "0" level for the bit cell period.

Biϕ-L A level change occurs at the centre of every bit cell.
A "one" is represented by a mid-cell transition from "1" level to "0" level.
A "zero" is represented by a mid-cell transition from "0" level to "1" level.
Additional transitions are allowed at the cell boundaries as necessary to maintain the above conventions.

DM-M A "one is represented by a mid-cell transition in either direction.
A "zero" is represented by a transition in either direction at the end of the relevant bit cell period, however, this transition is suppressed if the "zero" is followed by a "one".

DMM is not included in this part of ISO/IEC 8841. The encoding algorithm is given to assist in the understanding of M^2 encoding.

M^2 M^2 code is a modification to the Miller code (also known as DM-M). The M^2 code is identical to DM-M except for those cases where an even number of "ones" follows an odd number of "zeros". The bit stream to be encoded is divided into data bit sequences of three types and then two units are added to define the code. The three types of bit sequence are

Type A: Any number of consecutive "ones".

Type B: two "zeros" separated by either no "ones" or an odd number of "ones".

Type C: a logic "zero" followed by an even number of "ones" and terminated by a "zero" not counted as part of the sequence (for example, 011, 01111).

The encoding rules for the above sequence are

Type A and Type B: coded as DM-M.

Type C: sequences are coded as DM-M, but the transition corresponding to the final "one" is suppressed.

The M^2 code retains the basic characteristics of DM-M and is an improvement in the sense that the d.c. content of DM-M has been effectively removed. To the one, one and one-half, and two-cell spacings of DM-M transitions, M^2 adds two and one-half cell and three-cell length spacing of transitions.

Information is carried in the interval between transitions. Relative pulse polarity has no significance. The one-and-one-half, two-and-one-half, and three-cell spacings are nonambiguous and can be used for synchronization. The bandwidth required for the M^2 code is less than that required for NRZ codes due to its relatively high transition density and lack of significant d.c. spectral content.

3PM The serial bit stream is divided into 3-bit bytes with each byte assigned six equally spaced positions where transitions can occur.

Each combination of 3-bit bytes is assigned a transition pattern according to the truth table shown in table B.7.

In the case of adjacent bytes where the preceding byte normally would have a transition in position 5, and the following byte would normally have a transition in position 1, both of these transitions are deleted and replaced by a single transition in position 6 of the preceding byte.

Figure A.1 — PCM code descriptions

Copyright International Organization for Standardization
Provided by IHS under license with ISO
No reproduction or networking permitted without license from IHS
Not for Resale

A.2.2 Parallel high density digital recording

A.2.2.1 General

When input data rates exceed the capability of a single track, recording on multiple tracks is used. Operation is as described in A.1.4 a), when data are available in parallel form. Operation is as described in A.1.4 b), when the input data is available only as a single high rate data stream. Optimum results require attention to the following:

a) **Coding used on tape:** Coding used on tape should

   1) have a frequency spectrum compatible with the bandwidth of the record/reproduce channel regardless of the input data pattern;

   2) maintain easy unambiguous synchronization decoding and data decoding accuracy regardless of the input data pattern;

   3) include sufficient redundancy to facilitate self-checking as a minimum and, preferably error detection and correction.

b) **Synchronization method:** The synchronization method should

   1) provide synchronization information frequently enough to permit adequate compensation of the dynamic skew, fast initial synchronization, and fast recovery from bit slip;

   2) require the minimum overhead consistent with the objectives in a) to avoid unnecessarily increasing the required channel bandwidth;

   3) occur sufficiently frequently and be represented by a pattern of sufficient length, or possessed of other unique feature(s), as necessary, to avoid misaligning the data frame and/or aliasing of reconstructed composite data.

Both the on-tape code and the synchronization method used should provide for the reverse playback.

A.2.2.2 Parallel PCM recording using wideband recorder/reproducers adjusted for PCM service category B parallel

See A.1.1, category B.

A.2.2.3 Parallel PCM recording using systems containing electronics optimized for PCM service category C

See A.1.1, category C.

A.2.2.4 Parallel HDDR format coding

Some examples of parallel HDDR codes and formats, with brief descriptions, are given in annex B. As the different codes and formats are incompatible, agreement between interchange parties on a common code and format is essential.

Copyright International Organization for Standardization
Provided by IHS under license with ISO
No reproduction or networking permitted without license from IHS
Not for Resale

Annex B
(informative)

Recording techniques

B.1 Recording code names and their abbreviations

Biϕ Biphase (also called Manchester code).

DM-M Delay modulation mark [also called Miller code or modified frequency modulation (MFM)].

ENRZ Enhanced nonreturn to zero.

M^2 Miller squared (a variant of Miller code).

NRZ-L Nonreturn to zero-level.

PROP Pseudorandom odd parity.

3PM 3-position modulation.

RNRZ Randomized nonreturn to zero.

B.2 Enhanced NRZ format for parallel HDDR

B.2.1 ENRZ coding

Enhanced NRZ is a variant of NRZ-level, one extra bit being added to each group of seven data bits prior to recording on a tape track. The added bit is an odd parity bit so that the total number of "ones" is an odd number for every eight recorded bits. The enhancement over a raw unmodified NRZ-L stream consists of a guaranteed minimum transition density, and provides an indication of accuracy during reproduction as well as indication of, and correction of, bit slip.

B.2.2 ENRZ — parallel HDDR format

The tracks of data to be recorded are formatted into frames for synchronizing purposes. Each frame consists of 680 bits where 40 bits are the deskew sync pattern, 80 bits are odd parity (one for every seven data bits), and 560 bits are data. The deskew sync pattern is 20 bits of 1010 — etc., followed by twenty additional bits of 0101 — etc. The data bits are collected into 80 groups (i.e. words) of seven data bits plus an added eighth odd parity bit. To break up long strings of continuous "ones" or continuous "zeros" data bits 2, 3, 6 and 7 of each word are inverted (i.e. complemented) prior to forming the eighth parity bit. Because the data words are always "odd" and the sync pattern is always "even", the sync pattern is "unique" and this pattern cannot appear as a "false sync" in the data portion of the frame.

During the deskew on playback, the inverted data bits are reinverted, and the deskew sync bits and parity bits are stripped from the data streams without leaving time gaps.

B.2.3 Summary of enhanced NRZ format

The ENRZ format can be summarized as follows:

a) Number of tracks: 14, 28, 42.

b) Frame size: 680 bits.

c) Data bits per frame: 560 bits.

d) Sync word length: 40 bits.

e) Sync word pattern: 20 bits of 0101 — etc. followed by 20 bits of 1010 — etc.

f) Special words/tracks: seven data bits plus one parity bit per data word; 80 words/frame.

g) Input data code: NRZ-L plus one synchronous 0° clock.

h) On-tape code/data conditioning: NRZ-L, bits 2, 3, 6 and 7 inverted each data word.

i) Polarity of on-tape data: as given in this part of ISO/IEC 8441, 4.4.6.

j) Bit sync protection: guaranteed minimum of 1 transition in every 15 bits of tape.

k) Reproduced data/rates: as given in table B.1.

l) Auxiliary data: time code, servo reference, and other auxiliary data are recorded on unused data tracks.

m) Reverse reproduce: yes.

Copyright International Organization for Standardization
Provided by IHS under license with ISO
No reproduction or networking permitted without license from IHS
Not for Resale

Table B.1 — Enhanced NRZ bandwidth utilization

Tape speed		Channel bandwidth	Tape channel bit rate	Nominal data throughput rate[1]
m/s	(in/s)	kHz	kbit/s	kbit/s
3,048	(120)	2 000	4 000	46 117,647
1,524	(60)	1 000	2 000	23 058,823
0,762	(30)	500	1 000	11 529,411
0,381	(15)	250	500	5 764,705
0,191	(7,5)	125	250	2 882,353
0,095	(3,75)	62,5	125	1 441,176
0,048	(1,875)	31,25	62,5	720,588

1) Throughput rate based on assumed 14 parallel digital tracks.

B.3 Miller squared format (M^2) for parallel HDDR

B.3.1 Miller squared coding

For a brief description see figure A.1.

B.3.2 M^2 format for parallel HDDR

Each channel of input data is arranged into 512 bit frames. The 32-bit sync word is inserted sequentially into each data channel. The block of data bits replaced by the sync word is placed in a master channel. Data are recorded in groups of 14 tracks with 13 data tracks and one master track per group (see figure B.1). Each channel of NRZ-L input data is encoded into M^2 code and recorded directly on tape (including the sync word).

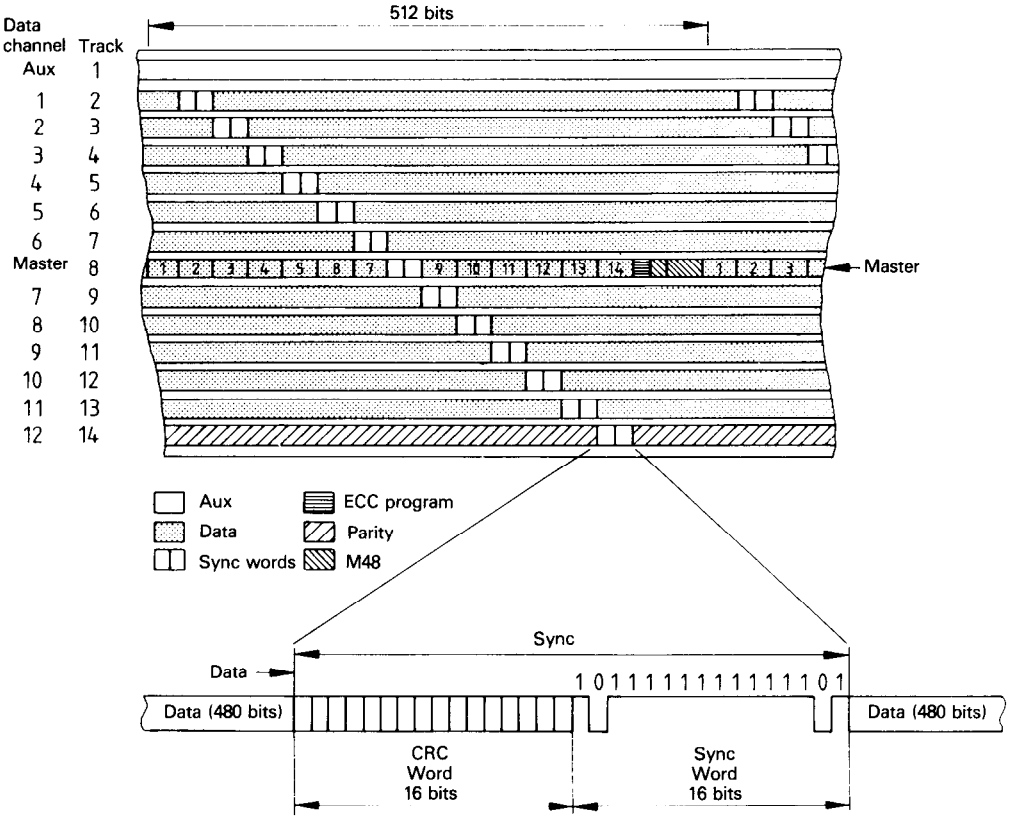

Figure B.1 — Format — typical sync word distribution

Copyright International Organization for Standardization
Provided by IHS under license with ISO
No reproduction or networking permitted without license from IHS
Not for Resale

B.3.3 Summary of M² format

The M² format can be summarized as follows:

a) Number of tracks: groups of 14 tracks; up to 13 data with one master track per group (see figure B.1).

b) Frame size: 512 bits.

c) Data bits per frame: 512 bits [see d) below].

d) Sync word length: 16 bits. The sync word is sequentially inserted into each data channel. The block of data replaced by he sync word is placed in the master channel.

e) Sync word pattern: 16 bit symmetrical word; 1011111111111101

f) Special words/tracks: a 64 bit block is reserved in the master channel of each frame for special information. This block follows the sync word time for channel 13.

g) Input data code: NRZ-L data plus one synchronous zero degree clock.

h) On-tape code/data conditioning: each channel of data including sync pattern and special words is encoded into M² code.

i) Polarity of on-tape data: polarity of data is not significant for M² code.

j) Bit sync protection: M² code is d.c. free and provides minimum guaranteed transition of 1 per 3 input data bits.

k) Reproduced data/rates: on reproduce, each channel is decoded to NRZ-L and deskewed. The sync word of each channel is removed and data (from the master channel) is reinserted. Reference reproduce rates, with time base stability equal to the accuracy of a reproduce crystal clock, are as given in table B.2.

l) Forward/reverse reproduce: yes.

m) Auxiliary data: time code and other auxiliary data are recorded on unused data tracks, or in the master channel where 48 bits are allocated for such purposes.

B.3.4 M² format bandwidth utilization/packing density

The M² code may be recorded at the equivalent of 2 bits/Hz bandwidth of the recording channel (see table B.2).

Table B.2 — M² bandwidth utilization

Tape speed		Channel bandwidth	Tape channel bit rate	Nominal data throughput rate[1]
m/s	(in/s)	kHz	kbit/s	kbit/s
3,048	(120)	2 000	4 000	52 000
1,524	(60)	1 000	2 000	26 000
0,762	(30)	500	1 000	13 000
0,381	(15)	250	500	6 500
0,191	(7,5)	125	250	3 250
0,095	(3,75)	62,5	125	1 625
0,048	(1,875)	31,25	62,5	812,5

1) Throughput rate based on assumed 14 parallel digital tracks; 13 data tracks plus 1 master track.

B.4 Randomized NRZ-L format parallel HDDR

B.4.1 RNRZ-L coding

For a brief description of the basis NRZ-L code, see figure A.1.

B.4.2 RNRZ-L parallel HDDR format

The tracks of data to be recorded are formatted into frames for synchronizing purposes. Each frame consists of 512 bits, being 16 overhead bits followed by 496 input data bits. The overhead bits consist of 15 programmable bits followed by 1 odd parity bit for the previous 511 bits.

Before recording on a tape track, each channel is further conditioned by a "randomizing" encoder to reduce the possible low frequency content of the raw NRZ data stream. The randomizer (encoder) can be implemented in the form of a network of shift registers and modulo-2 adders (exclusive-OR gates). The randomized NRZ-L data stream to be recorded is generated by modulo-2 addition of the reconstructed (randomized) data to the modulo-2 sum of the outputs from the fourteenth and fifteenth stages of a 15-stage shift register. The output randomized NRZ-L data stream is also the input to the shift register (see figure B.2, record side).

In the reproduce channels, the randomized data stream recovered from tape is decoded (derandomized) after bit synchronization by modulo-2 addition of the randomized data stream and the modulo-2 sum of the fourteenth and fifteenth stages of a 15-stage decoding shift register. The input to the decoding shift register is the reconstructed randomized data stream (see figure B.2, reproduce side).

Copyright International Organization for Standardization
Provided by IHS under license with ISO
No reproduction or networking permitted without license from IHS
Not for Resale

Reverse-play decoding is accomplished by modulo-2 addition of the randomized data stream to the modulo-2 sum of the outputs from the first and fifteenth stages of the 15-stage decoding shift register. The net effect is that the decoding shift register runs "backwards" (i.e. time inverse) with respect to the encoding randomizer.

The decoder is self-synchronized and output data is valid after 15 error-free data bits have been loaded into the shift register. Compatibility with earlier systems is provided by including strapping options in the encoder and decoder shift registers for implementing two additional randomizing codes. The alternative arrangements are

a) 11 stages with feedback taps at stages 9 and 11;

b) 17 stages with feedback from stages 14 and 17.

Recognition of the sync word in reverse is facilitated by the use of a symmetrical sync word. The recommended word is 0010101111010100. The final bit is not used because the serial parity bit is substituted in its place. Symmetry requires that the first bit also be deleted; however, in earlier systems without reverse replay, the first bit is used and has to be correctly programmed. These earlier systems used the reference unidirectional sync word 010110010001111X. Since all systems have the capability of programming the sync word in both record and reproduce electronics, compatibility can be achieved.

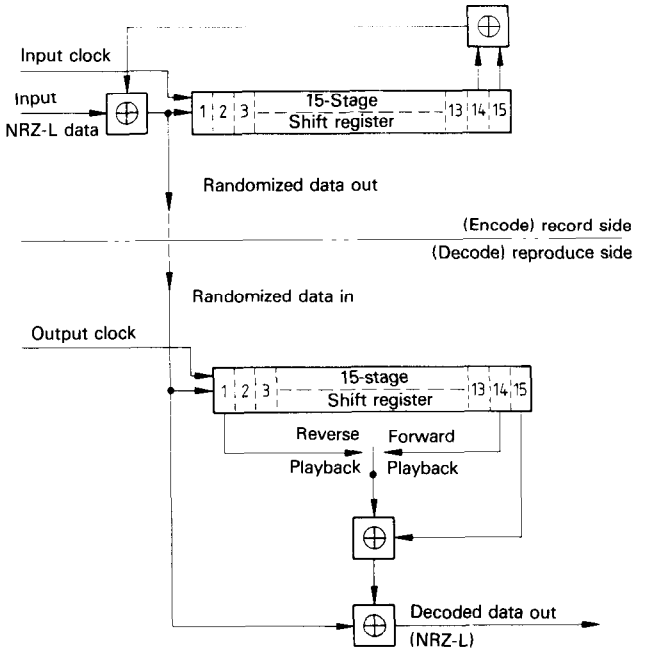

Figure B.2 — Randomized NRZ-L — Randomizer and derandomizer block diagram

B.4.3 Summary of randomized NRZ-L format

A summary of the randomized NRZ-L format is as follows:

a) Number of tracks: 28.

[25,4 mm (1,0 in) tape]

b) Frame size: 512 bits.

c) Data bits per frame: 496 bits.

d) Sync word length: 16 bits: 15-bit sync word plus an odd parity bit.

e) Sync word pattern: 010110010001111 (P) non-reversible; (0)01010111101010 (P) reversible.

f) Special words/tracks: not applicable.

g) Input data code: NRZ-L plus one synchronous 0° clock.

h) On tape code/data conditioning: user data and frame sync are randomized and derandomized NRZ-L.

i) Polarity of on-tape data: as given in 4.4.6.

j) Bit sync protection: real-time operation assured bit synchronization is made possible by randomizing.

k) Reproduced data/rates: as given in table B.2. Data are derandomized, deskewed, and sync removed.

l) Reverse reproduce: yes.

m) Auxiliary data: time code, servo reference, and other auxiliary data are recorded on unused edge tracks.

B.4.4 Randomized NRZ-L format bandwidth utilization/packing density

The randomized NRZ-L code may be recorded at the equivalent of 2 bits/Hz bandwidth of the recording channel (see table B.3).

Copyright International Organization for Standardization
Provided by IHS under license with ISO
No reproduction or networking permitted without license from IHS
Not for Resale

Table B.3 — Randomized NRZ-L bandwidth utilization

Tape speed		Channel bandwidth	Tape channel bit rate	Nominal data throughput rate[1]
m/s	(in/s)	kHz	kbit/s	kbit/s
3,048	(120)	2 000	4 000	54 250
1,524	(60)	1 000	2 000	27 125
0,762	(30)	500	1 000	13 562,5
0,381	(15)	250	500	6 781,25
0,191	(7,5)	125	250	3 390,625
0,095	(3,75)	62,5	125	1 695,313
0,048	(1,875)	31,25	62,5	847,656

1) Throughput rates are based on assumed 14 parallel digital tracks.

B.5 PROP format for parallel HDDR (Pseudo random odd parity)

B.5.1 General

The channels or tracks of data to be recorded are formatted into frames for synchronizing purposes. Each frame consists of 504 bits, where 24 bits are a deskew synchronization pattern (001111000011110000111100), 60 bits are odd parity (one for every seven data bits), and 420 bits are data. The data bits are collected into 60 groups (i.e. words) of seven data bits, plus an added eighth odd parity bit. The data only (i.e., the 420 data bits) portion of the frame is randomized. Parity bits and synchronization bits are not randomized. Parity is formed on each randomized word. The randomization consists of modulo-2 addition of data and a $(2^6 - 1)$ pseudo-random sequence. The sequence is itself modified by repeating every sixth bit of the sequence. The sequence generator is reset at data bit seven of each new frame. Two different stages of the sequence generator are used. One stage is used for odd-numbered parallel channels. The second stage is used for even-numbered channels. The resulting randomizing codes are shown in table B.4 and table B.5. Maximum security against repeated data patterns is provided by combining the parity bits with randomization. Note that the sync word pattern is an "even" pattern versus data words which are always "odd" patterns. Hence, the sync pattern is unique and cannot appear in the data portion of the frame. The data word parity bit is useful as an error indicator that is independent of the data stream.

During reproduction the data are deskewed. Synchronization bits, parity bits, and randomization bits are removed, and the data are restored to their original NRZ-L form.

Table B.4 — PROP randomizing code, odd-numbered channels

Data word	Data bits	X_1	X_2	X_3	X_4	X_5	X_6	X_7
1	1 to 7	1	1	0	0	1	0	1
2	8 to 14	1	1	1	1	1	1	0
3	15 to 21	0	0	0	0	0	1	0
4	22 to 28	0	0	0	0	1	1	0
5	29 to 35	0	0	0	1	0	1	0
6	36 to 42	0	0	1	1	1	1	0
7	43 to 49	1	1	0	0	0	1	1
8	50 to 56	1	1	0	0	1	0	0
9	57 to 63	1	1	0	1	1	0	1
10	64 to 70	1	1	1	0	1	1	0
11	71 to 77	0	0	1	1	0	1	0
12	78 to 84	1	1	0	1	1	1	1
13	85 to 91	1	1	1	0	0	0	0
14	92 to 98	0	0	1	0	0	0	0
15	99 to 105	1	1	1	0	0	0	1
16	106 to 112	0	0	1	0	0	1	1
17	113 to 119	1	1	1	0	1	0	0
18	120 to 126	0	0	1	1	1	0	0
19	127 to 133	1	1	0	0	1	0	1
20	134 to 140	1	1	0	1	1	1	0
21	141 to 147	1	1	1	0	0	1	1
22	148 to 154	0	0	1	0	1	0	1
23	155 to 161	1	1	1	1	1	1	1
24	162 to 168	0	0	0	0	0	1	0
25	169 to 175	0	0	0	0	1	1	0
26	176 to 182	0	0	0	1	0	1	0
27	183 to 189	0	0	1	1	1	1	0
28	190 to 196	1	1	0	0	0	1	1
29	197 to 203	1	1	0	0	1	0	0
30	204 to 210	1	1	0	1	1	0	1
31	211 to 217	1	1	1	0	1	1	0
32	218 to 224	0	0	1	1	0	1	0
33	225 to 231	1	1	0	1	1	1	1
34	232 to 238	1	1	1	0	0	0	0
35	239 to 245	0	0	1	0	0	0	0
36	246 to 252	1	1	1	0	0	0	1
37	253 to 259	0	0	1	0	0	1	1
38	260 to 266	1	1	1	0	1	0	0
39	267 to 273	0	0	1	1	1	0	0
40	274 to 280	1	1	0	0	1	0	1
41	281 to 287	1	1	0	1	1	1	0
42	288 to 294	1	1	1	0	0	1	1
43	295 to 301	0	0	1	0	1	0	1
44	302 to 308	1	1	1	1	1	1	0
45	309 to 315	0	0	0	0	0	1	0
46	316 to 322	0	0	0	0	1	1	0
47	323 to 329	0	0	0	1	0	1	0
48	330 to 336	0	0	1	1	1	1	0
49	337 to 343	1	1	0	0	0	1	1
50	344 to 350	1	1	0	0	1	0	0
51	351 to 357	1	1	0	1	1	0	1
52	358 to 364	1	1	1	0	1	1	0
53	365 to 371	0	0	1	1	0	1	0
54	372 to 378	1	1	0	1	1	1	1
55	379 to 385	1	1	1	0	0	0	0
56	386 to 392	0	0	1	0	0	0	0
57	393 to 399	1	1	1	0	0	0	1
58	400 to 406	0	0	1	0	0	1	1
59	407 to 413	1	1	1	0	1	0	0
60	414 to 420	0	0	1	1	1	0	0

Copyright International Organization for Standardization
Provided by IHS under license with ISO
No reproduction or networking permitted without license from IHS
Not for Resale

Table B.5 — PROP randomizing code, even-numbered channels

Data word	Data bits	Y_1	Y_2	Y_3	Y_4	Y_5	Y_6	Y_7
1	1 to 7	0	0	0	1	0	1	1
2	8 to 14	1	1	1	1	1	0	0
3	15 to 21	0	0	0	0	1	0	0
4	22 to 28	0	0	0	1	1	0	0
5	29 to 35	0	0	1	0	1	0	0
6	36 to 42	1	1	1	1	1	0	1
7	43 to 49	0	0	0	0	1	1	1
8	50 to 56	0	0	0	1	0	0	1
9	57 to 63	0	0	1	1	0	1	1
10	64 to 70	1	1	0	1	1	0	0
11	71 to 77	1	1	1	1	0	1	0
12	78 to 84	0	0	1	1	1	1	1
13	85 to 91	1	1	0	0	0	0	0
14	92 to 98	1	1	0	0	0	0	1
15	99 to 105	1	1	0	0	0	1	0
16	106 to 112	1	1	0	0	1	1	1
17	113 to 119	1	1	0	1	0	0	0
18	120 to 126	1	1	1	1	0	0	1
19	127 to 133	0	0	0	1	0	1	1
20	134 to 140	0	0	1	1	1	0	1
21	141 to 147	1	1	0	0	1	1	0
22	148 to 154	1	1	0	1	0	1	1
23	155 to 161	1	1	1	1	1	0	0
24	162 to 168	0	0	0	0	1	0	0
25	169 to 175	0	0	0	1	1	0	0
26	176 to 182	0	0	1	0	1	0	0
27	183 to 189	1	1	1	1	1	0	1
28	190 to 196	0	0	0	0	1	1	1
29	197 to 203	0	0	0	1	0	0	1
30	204 to 210	0	0	1	1	0	1	1
31	211 to 217	1	1	0	1	1	0	0
32	218 to 224	1	1	1	0	1	0	1
33	255 to 231	0	0	1	1	1	1	1
34	232 to 238	1	1	0	0	0	0	0
35	239 to 245	1	1	0	0	0	0	1
36	246 to 252	1	1	0	0	0	1	0
37	253 to 259	1	1	0	0	1	1	1
38	260 to 266	1	1	0	1	0	0	0
39	267 to 273	1	1	1	1	0	0	1
40	274 to 280	0	0	0	1	0	1	1
41	281 to 287	0	0	1	1	1	0	1
42	288 to 294	1	1	0	0	1	1	0
43	295 to 301	1	1	0	1	0	1	1
44	302 to 308	1	1	1	1	1	0	0
45	309 to 315	0	0	0	0	1	0	0
46	316 to 322	0	0	0	1	1	0	0
47	323 to 329	0	0	1	0	1	0	0
48	330 to 336	1	1	1	1	1	0	1
49	337 to 343	0	0	0	0	1	1	1
50	344 to 350	0	0	0	1	0	0	1
51	351 to 357	0	0	1	1	0	1	1
52	358 to 364	1	1	0	1	1	0	0
53	365 to 371	1	1	1	0	1	0	1
54	372 to 378	0	0	1	1	1	1	1
55	379 to 385	1	1	0	0	0	0	0
56	386 to 392	1	1	0	0	0	0	1
57	393 to 399	1	1	0	0	0	1	0
58	400 to 406	1	1	0	0	1	1	1
59	407 to 413	1	1	0	1	0	0	0
60	414 to 420	1	1	1	1	0	0	1

B.5.2 Summary of PROP format

A summary of PROP format is as follows:

a) Number of tracks: 14, 28.

b) Frame size: 504 bits.

c) Data bits per frame: 420 bits.

d) Sync word length: 24 bits.

e) Sync word pattern: (001111000011110000111100).

f) Special words/tracks: 60 data words per frame, with seven data bits, plus one parity bit per word.

g) Input data code: NRZ-L data plus synchronous clock.

h) On tape code/data: data randomization; odd parity every seven data bits; NRZ-L coding.

i) Polarity of on-tape data: as given in this part of ISO/IEC 8441, 4.4.6.

j) Bit sync protection: controlled d.c. content; guaranteed transition density; hand over clocking.

k) Reproduced data/rates: rates as given in table B.5. Output NRZ-L plus synchronous clock.

l) Reverse reproduce: yes.

m) Auxiliary data: time, voice, and other auxiliary data are recorded on unused edge tracks.

B.5.3 PROP format bandwidth utilization

The PROP code may be recorded at the equivalent of 2 bits/Hz bandwidth of the recording/reproducing channels (see table B.6).

B.6 3PM formats for parallel HDDR

B.6.1 General

Coding involves the division of the individual serial bit streams into 3-bit bytes with each byte being assigned six equally spaced time positions where transitions can occur.

The transition positions for each data byte pattern are assigned according to table B.7. Note that transition position P_6 is left empty in table B.7.

Copyright International Organization for Standardization
Provided by IHS under license with ISO
No reproduction or networking permitted without license from IHS
Not for Resale

Table B.6 — PROP format bandwidth utilization

Tape speed		Channel bandwidth	Tape channel bit rate	Nominal data throughput rate[1)]
m/s	(in/s)	kHz	kbit/s	kbit/s
3,048	(120)	2 000	4 000	46 666,67
1,524	(60)	1 000	2 000	23 333,33
0,762	(30)	500	1 000	11 666,67
0,381	(15)	250	500	5 833,33
0,191	(7,5)	125	250	2 916,67
0,095	(3,75)	62,5	125	1 458,33
0,048	(1,875)	31,25	62,5	729,17

1) Throughput rates based on assumed 14 parallel digital tracks.

Each basic code pattern can involve one or two transitions and the coding rules require a minimum spacing of two transition-free periods between any two transitions. Concatenation of certain data bytes would cause this minimum spacing rule to be violated unless special steps were taken. For example, the data sequence 011, 101 would give rise to transitions at P_2 and P_5 for byte 1 followed by a transition at P_1 for byte 2. In such cases the offending transitions (P_5 and P_1 in the sample) are "merged" to form a single transition at P_6 (see figure B.7).

There are two current implementations, known as format A and the later format B, of the 3PM format which differ in the frame length and sync marker used.

B.6.2 3PM format versions

B.6.2.1 3PM format A

Incoming parallel NRZ-L data is formatted into frames for synchronizing purposes. Each frame consists of 286 bits, where 10 bits are a synchronization word, 16 bits are a cyclical redundancy check (CRC) word and 260 bits are data (see figure B.3). The data bits are coded as outlined above. A window, 10 bit periods long, is assigned for synchronization and a 7,5 bit period sync word placed symmetrically within it (see figure B.6). As the sync window violates the coding rules it cannot be confused with data, and its symmetry allows bi-directional reading. The synchronization word thus provides clock frequency as well as phasing information and has all the properties necessary for a parallel deskewing marker.

B.6.2.2 3PM format B

Similar to format A except

a) the frame length is 510 bits, where 18 bits are the synchronizing word, 16 bits are the CRC word and 476 bits are data (see figure B.3);

b) the synchronizing window is 18 bit periods long with a 7,5 period interval set symmetrically within it.

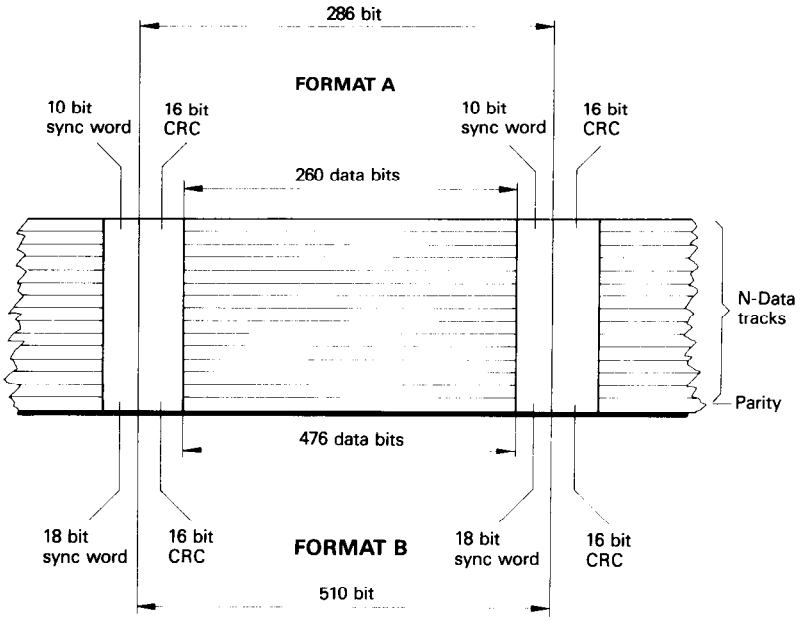

Figure B.3 — 3PM recording formats A and B

Copyright International Organization for Standardization
Provided by IHS under license with ISO
No reproduction or networking permitted without license from IHS
Not for Resale

Table B.7 — Basic 3PM coding scheme

Data byte			Transition positions					
			P_1	P_2	P_3	P_4	P_5	P_6
0	0	0	0	0	0	0	1	0
0	0	1	0	0	0	1	0	0
0	1	0	0	1	0	0	0	0
0	1	1	0	1	0	0	1	0
1	0	0	0	0	1	0	0	0
1	0	1	1	0	0	0	0	0
1	1	0	1	0	0	0	1	0
1	1	1	1	0	0	1	0	0

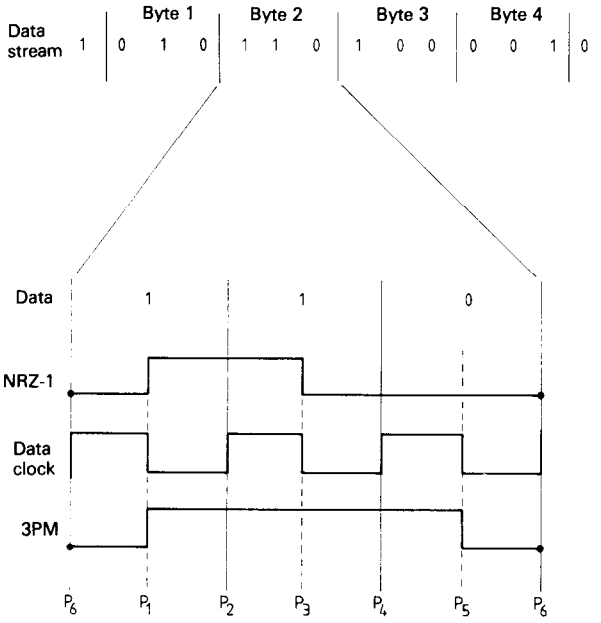

Figure B.4 — Typical 3PM coding waveform

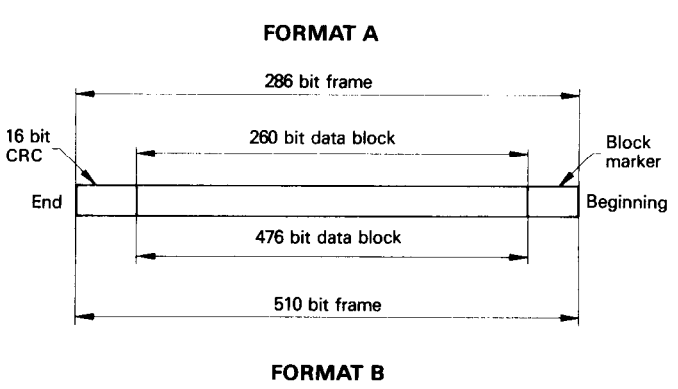

Figure B.5 — Frame structure (one track) — Formats A and B

B.6.3 Error detection and correction (formats A and B)

During the recording process the data stream is broken into blocks (see figure B.5).

Each block is treated as a binary number which is divided by a "generator polynomial" having the expression

$$x^{16} + x^{12} + x^5 + 1$$

After the division process, the 16-bit remainder is recorded immediately following the data block as the CRC word.

During reproduction, each block is divided by the same polynomial and the resulting remainder is compared with the recorded CRC word.

If the two remainders are identical, the probability that the data has been recorded and reproduced without error is extremely high. Conversely, if the remainders differ, the probability that one or more errors has occurred is extremely high.

The system is effective in detecting error bursts as well as individual errors.

B.6.4 Summary of 3PM formats A and B

a) Number of tracks: up to 14, 28, 32, 42 track heads.

b) Frame size: 286 bits (format A); 510 bits (format B).

c) Data bits per frame: 260 bits (format A); 476 bits (format B).

d) Sync word length: 10 bits (format A); 18 bits (format B).

e) Sync word pattern: 7,5 clock period code violations within a 10-clock period interval.

f) Special words/tracks: 16-bit CRC in every frame.

g) Input data code: NRZ-L data plus synchronous clock.

h) On-tape code/data: 3PM.

i) On-tape data polarity: see this part of ISO/IEC 8441, 4.4.6.

j) Bit sync protection: guaranteed 1 transition in every six clock periods of data. Unique sync word of seven 1/2-bit periods thus violates the code.

Copyright International Organization for Standardization
Provided by IHS under license with ISO
No reproduction or networking permitted without license from IHS
Not for Resale

k) Reproduce data/rates: maximum is set by the packing density limit (see B.6.5) which applies at any tape speed up to 3,048 m/s (120 in/s).

l) Reverse reproduce: yes.

m) Auxiliary data: time, voice, and other auxiliary data may be recorded on unused tracks in direct, FM, and digital format. Edge tracks may be used on 14 track heads.

B.6.5 3PM format bandwidth utilization

At 3,048 m/s (120 in/s), 2-MHz channel bandwidth (direct recording) allows a packing density of 1 574 bit/mm (40 kbit/in), corresponding to 4,8 Mbit/s. This is equal to 2,4 bits per hertz, and assumes the use of normal energy instrumentation tapes complying with ISO/IEC 8441-1.

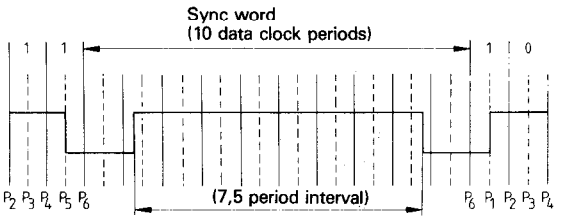

Features:

- Cannot be confused with data.
- Bi-directional.
- Efficient (10 clock periods).
- Provides both clocking and phasing information.
- Suitable for parallel deskewing.

Figure B.6 — Unique sync words for 3PM format A

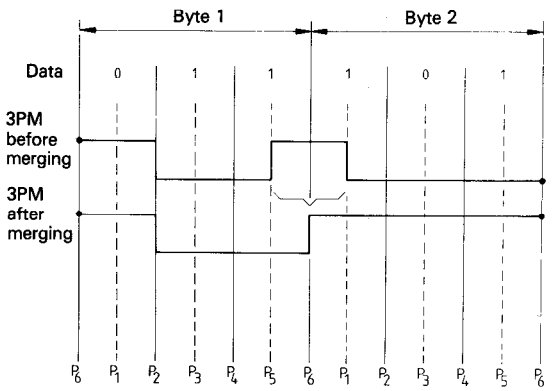

Figure B.7 — 3PM merging

B.7 MODAS airborne recording format

B.7.1 General

The modular digital acquisition system (MODAS) format is in wide use by the UK Ministry of Defence and its contractors. The format has been advised for use in airborne or similar hostile environments where cleanliness of the tape cannot be assured and the use of an error correction system is essential to realize a practical operating system. A choice of two packing densities is provided: 400 bit/mm (10 kbit/in) recorded in biphase mark code, or 800 bit/mm (20 kbit/in) recorded in M^2 code. Only self-clocking codes are used in order to avoid the decode problems associated with bit jitter induced by the recording environment.

The system is designed to produce data compatible with computer analysis. The simple error correcting format described provides from 10^2 to 10^3 improvement in error performance and virtually eliminates unflagged data errors. In practice, the format provides a very secure data system typically achieving error reductions of about 500 times the raw data error rate.

B.7.2 Description

The airborne recording system falls into category A (serial to parallel mode) as in this part of ISO/IEC 8441, clause A.1. It accepts a single stream of multiplexed serial words from the data acquisition system and distributes them into a multitrack serial word format (see figure B.8). The data streams are encoded for recording and 16-bit sync words (see figure B.9) are added to all tracks, interposed between blocks of data words. Each data word consists of an edit bit followed by a number of data bits and one odd parity bit. The edit bit, followed by the least significant data bits, is recorded first. The edit bit is obtained by sequentially multiplexing each bit of a 64-bit edit word containing all the system housekeeping information (e.g. datafield syncs, flight No., GMT, event counts, etc.) into the serial data stream. On replay, the edit bits are demultiplexed into 64-bit serial words and used for display and control functions.

Track 1 is used for recording the "even" transverse parity of all the data tracks. Transverse parity is inhibited for the bit period corresponding to the longitudinal parity; this period is used to insert the "odd" parity generated from the serial parity of the parity track. The serial parity of each data word is checked on replay. If an error is found, the transverse parity is used to correct the particular data bit in error. As serial parity cannot detect double parity errors, the transverse parity is checked for each row of data bits. If an error is found uncorrelated with a

Copyright International Organization for Standardization
Provided by IHS under license with ISO
No reproduction or networking permitted without license from IHS
Not for Resale

serial parity error, all the data words associated with that row have an error flag set as they are passed on for processing. If a large burst error occurs on a single track, this will also be detected either by an accompanying loss of sync threshold, or an error in expected sync position relative to the previous sync word. The track in error is then reconstituted by means of the transverse parity track. If an error occurs during this time on any other track, the correction will fail at that point and all the data words associated with that row will be flagged as possible errors.

This simple system relies on the very low probability of a tape defect spanning two adjacent tracks, or separate dropouts occurring simultaneously on two or more tracks. The system can correct all single bit and burst errors, except where double parity errors occur. Such errors are detected and flagged on the associated data, and although double parity errors can theoretically be missed, in practice the frequency of such occurrences is insignificant.

Other equipment using this form of error correction is commercially available. It also forms the basis of operation of the current 9-track 63 bit/mm (1 600 bit/in) record standard for computer tapes covered in ISO 3788.

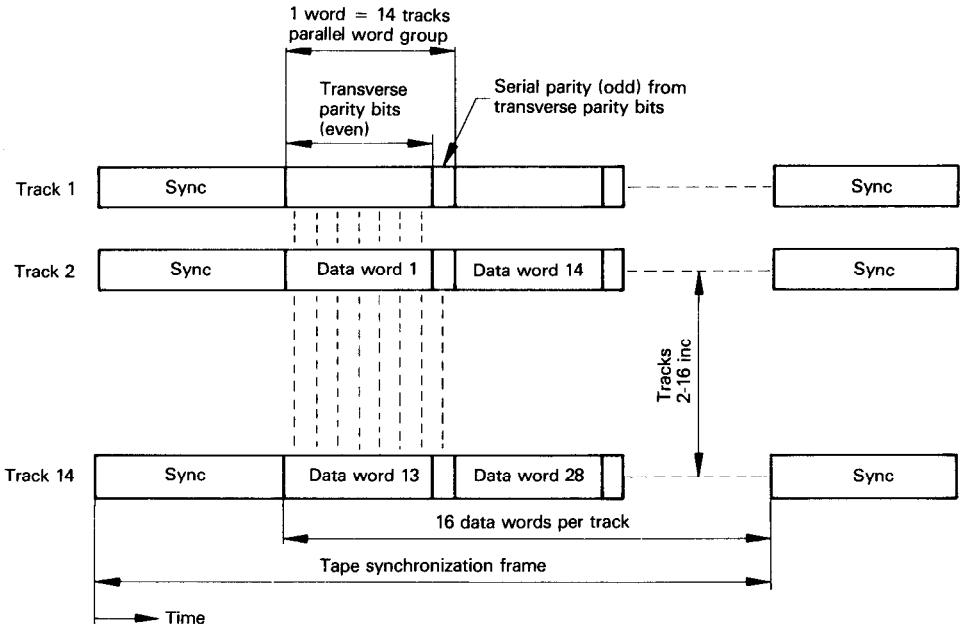

Figure B.8 — MODAS on-tape recording format, 14-track system

Copyright International Organization for Standardization
Provided by IHS under license with ISO
No reproduction or networking permitted without license from IHS
Not for Resale

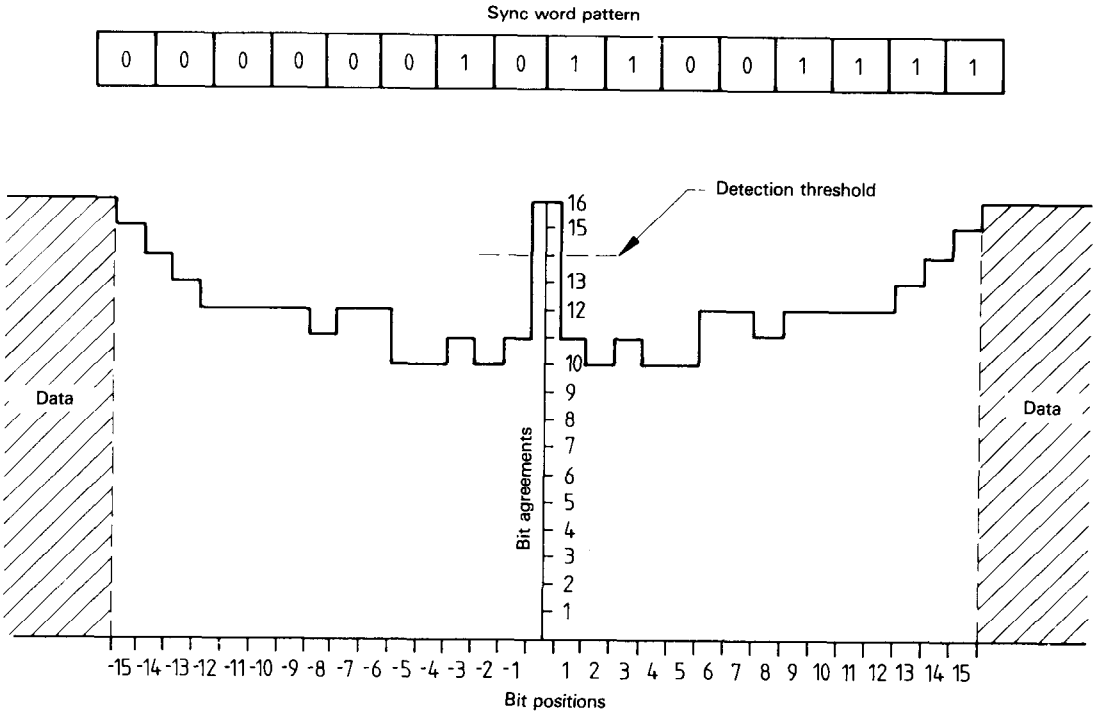

Figure B.9 — MODAS — worst-case bit agreements for synchronizing word

Copyright International Organization for Standardization
Provided by IHS under license with ISO
No reproduction or networking permitted without license from IHS
Not for Resale

UDC 681.327.63

Descriptors: data processing, information interchange, digital recording methods, magnetic tapes, recording characteristics, specifications, dimensions, tests, performance tests, interchangeability.

Price based on 32 pages

Copyright International Organization for Standardization
Provided by IHS under license with ISO
No reproduction or networking permitted without license from IHS

Not for Resale