INTERNATIONAL STANDARD

ISO/IEC 2593

Fourth edition
2000-12-15

Information technology — Telecommunications and information exchange between systems — 34-pole DTE/DCE interface connector mateability dimensions and contact number assignments

Technologies de l'information — Télécommunications et échange d'information entre systèmes — Dimensions de branchement du connecteur d'interface ETTD/ETCD à 34 pôles et affectation des numéros de contact

Reference number
ISO/IEC 2593:2000(E)

© ISO/IEC 2000

Copyright International Organization for Standardization
Provided by IHS under license with ISO
No reproduction or networking permitted without license from IHS

Not for Resale

PDF disclaimer

This PDF file may contain embedded typefaces. In accordance with Adobe's licensing policy, this file may be printed or viewed but shall not be edited unless the typefaces which are embedded are licensed to and installed on the computer performing the editing. In downloading this file, parties accept therein the responsibility of not infringing Adobe's licensing policy. The ISO Central Secretariat accepts no liability in this area.

Adobe is a trademark of Adobe Systems Incorporated.

Details of the software products used to create this PDF file can be found in the General Info relative to the file; the PDF-creation parameters were optimized for printing. Every care has been taken to ensure that the file is suitable for use by ISO member bodies. In the unlikely event that a problem relating to it is found, please inform the Central Secretariat at the address given below.

© ISO/IEC 2000

All rights reserved. Unless otherwise specified, no part of this publication may be reproduced or utilized in any form or by any means, electronic or mechanical, including photocopying and microfilm, without permission in writing from either ISO at the address below or ISO's member body in the country of the requester.

ISO copyright office
Case postale 56 • CH-1211 Geneva 20
Tel. + 41 22 749 01 11
Fax + 41 22 749 09 47
E-mail copyright@iso.ch
Web www.iso.ch

Printed in Switzerland

--`,,```,,,,````-`-`,,`,,`,`,,`---

Copyright International Organization for Standardization
Provided by IHS under license with ISO
No reproduction or networking permitted without license from IHS

© ISO/IEC 2000 – All rights reserved

Not for Resale

Foreword

ISO (the International Organization for Standardization) and IEC (the International Electrotechnical Commission) form the specialized system for worldwide standardization. National bodies that are members of ISO or IEC participate in the development of International Standards through technical committees established by the respective organization to deal with particular fields of technical activity. ISO and IEC technical committees collaborate in fields of mutual interest. Other international organizations, governmental and non-governmental, in liaison with ISO and IEC, also take part in the work.

International Standards are drafted in accordance with the rules given in the ISO/IEC Directives, Part 3.

In the field of information technology, ISO and IEC have established a joint technical committee, ISO/IEC JTC 1. Draft International Standards adopted by the joint technical committee are circulated to national bodies for voting. Publication as an International Standard requires approval by at least 75 % of the national bodies casting a vote.

Attention is drawn to the possibility that some of the elements of this International Standard may be the subject of patent rights. ISO and IEC shall not be held responsible for identifying any or all such patent rights.

International Standard ISO/IEC 2593 was prepared by Joint Technical Committee ISO/IEC JTC 1, *Information technology*, Subcommittee SC 6, *Telecommunications and information exchange between systems*.

This fourth edition cancels and replaces the third edition (ISO 2593:1993), of which it constitutes a minor revision.

Annex A forms a normative part of this International Standard.

© ISO/IEC 2000 – All rights reserved

Copyright International Organization for Standardization
Provided by IHS under license with ISO
No reproduction or networking permitted without license from IHS
Not for Resale

Information technology — Telecommunications and information exchange between systems — 34-pole DTE/DCE interface connector mateability dimensions and contact number assignments

1 Scope

This International Standard specifies the 34-pole connector and the assignment of contact numbers at the interface between data terminal equipment (DTE) and data circuit-terminating equipment (DCE) where ITU-T Recommendation V.36 or Recommendation X.21bis together with Recommendation V.10 and V.11 are applicable.

NOTE 1 An interoperation between interfaces designed according to electrical characteristics specified in ITU-T Recommendation V.36 and those specified in ITU-T Recommendation V.11 is, at least to a limited degree, possible. This can be achieved, for example, by using a passive adaptor which joins the interface connectors in accordance with ISO/IEC 2593 and ISO 4902, or ISO 4903, respectively.

This International Standard specifies the dimensions of the connector housing and gives recommendations for the type of locking device (jack-screw system) and connector shielding.

2 Normative references

The following normative documents contain provisions which, through reference in this text, constitute provisions of this International Standard. For dated references, subsequent amendments to, or revisions of, any of these publications do not apply. However, parties to agreements based on this International Standard are encouraged to investigate the possibility of applying the most recent editions of the normative documents indicated below. For undated references, the latest edition of the normative document referred to applies. Members of ISO and IEC maintain registers of currently valid International Standards.

ISO 261:1998, *ISO general-purpose metric screw threads — General plan.*

ISO 4902:1989, *Information technology — Data communication — 37-pole DTE/DCE interface connector and contact number assignments.*

ISO 4903 : 1989, *Information technology — Data communication — 15-pole DTE/DCE interface connector and contact number assignments*.

ITU-T Recommendation V.10 : 1993, *Electrical characteristics for unbalanced double-current interchange circuits operating at data signalling rates nominally up to 100 kbit/s.*

ITU-T Recommendation V.11 : 1996, *Electrical characteristics for balanced double-current interchange circuits operating at data signalling rates up to 10 Mbit/s.*

ITU-T Recommendation X.21 : 1992, *Interface between Data Terminal Equipment and Data Circuit-terminating Equipment for synchronous operation on public data networks.*

ITU-T Recommendation X.21 *bis* : 1988, *Use on public data networks of Data Terminal Equipment (DTE) which is designed for interfacing to synchronous V-Series modems*.

ITU-T Recommendation V.28 : 1993, *Electrical characteristics for unbalanced double-current interchange circuits.*

ITU-T Recommendation V.36:1988*, Modems for synchronous data transmission using 60-108 kHz group band circuits*.

© ISO/IEC 2000 – All rights reserved

Copyright International Organization for Standardization
Provided by IHS under license with ISO
No reproduction or networking permitted without license from IHS
Not for Resale

IEC 60050(581):1978, *International Electrotechnical Vocabulary – Chapter 581: Electromechanical components for electronic equipment.*

IEC 60807-6:1988, *Rectangular connectors for frequencies below 3 MHz – Part 6: Detail specification for a range of connectors with size 20 (7.5A) round contacts having polarized guides – Fixed solder contact type*.

3 Definitions

For the purposes of this International Standard, the definitions given in IEC 60050(581) apply. For the convenience of the users of this International Standard, the following definitions are repeated.

3.1 cable adaptor: A part of a connector or an accessory consisting of a rigid housing for attachment to the connector body. It may incorporate provision for a cable clamp or seal for terminating screens and provide shielding to electrical interference. It may be straight or angled.

3.2 connector housing: A part of a connector into which the insert and contacts are assembled.

3.3 contact arrangement: The number, spacing and configuration of contacts in a component.

3.4 female contact: A contact intended to make electrical engagement on its inner surface and which will accept entry of a male contact.

3.5 intermateable connectors: Two connectors are intermateable when they are capable of being connected electrically and mechanically but without regard to their performance and intermountability.

3.6 jack-screw system: A device comprising a set of captive screws and nuts used to couple and uncouple mating components. It may also provide a polarization facility.

3.7 locking device: A feature incorporated in certain components to provide mechanical retention of their mating part.

3.8 male contact: A contact intended to make electrical engagement on its outer surface and which will enter a female contact.

3.9 mounting flange: A projection from a component for the purpose of attaching the component to a rigid surface.

3.10 (n-pole-)connector: A component which terminates conductors for the purpose of providing connection and disconnection to a suitable mating component.

3.11 polarization: Features on mating components to prevent incorrect mating.

4 Connector Specifications

A 34-pole connector shall be provided for the DTE/DCE interface.

Figures 1 to 5 illustrate the 34-pole connector. Only those dimensions that are essential for mating are shown.

Figure 1 illustrates the DTE connector which has 34 male contacts in a connector housing. Figure 2 illustrates the DCE connector which has 34 female contacts in a connector housing. The connector housing on the DTE connector is dimensioned to fit inside the connector housing on the DCE connector (see figures 1 and 2). Contact identification lettering is also specified in figures 1 and 2. The use of shields and mounting flanges is illustrated in figures 1 and 2 respectively. Since their shape and size is not essential for mating, the use of different shape and size from those illustrated does not affect conformance with this International Standard.

Figure 3 illustrates the dimensions for the contact spacing.

Figures 4 and 5 illustrate the dimensions for the male and female contacts respectively.

Figures 8 and 9 illustrate the connector mountings.

The connectors shall be equipped with a jack-screw system (see figures 6 and 7 and tables 2 and 3). On the DTE connector, the female jack-screw (nut) shall be positioned adjacent to the male contact lettered A and the male jack-screw

© ISO/IEC 2000 – All rights reserved
Copyright International Organization for Standardization
Provided by IHS under license with ISO
No reproduction or networking permitted without license from IHS
Not for Resale

shall be positioned adjacent to the male contact lettered MM. Both jack-screws of the DTE connector shall be rotateable. On the DCE connector, the female jack-screw (nut) shall be positioned adjacent to the female contact lettered MM and the male jack-screw shall be positioned adjacent to the female contact lettered A. Both jack-screws of the DCE connector shall be fixed to prevent rotation.

Connectors shall use either the 6-32 UNC thread in accordance with the present specification of IEC 60807-6 or, if required by national regulations or mutual user agreement, M 3 as specified in ISO 261.

When procuring equipment internationally which will use this 34-pole connector, the user shall specify the thread type in accordance with national requirements.

NOTES

2 The nominal contact diameter of 1,6 mm is referred to as size 16 in IEC 60807-7.

3 The first edition of this International Standard did not specify all the connector dimensions required to ensure mechanical compatibility. As a result, contacts with nominal diameter of both 1 mm and 1,6 mm and two different arrangements of male shell and female shell and different dimensions of jack-screws are now in use in different countries. This International Standard specifies 1,6 mm contacts and the particular arrangement of male shell and of female shell described above; where arrangements occur which do not conform with this edition, adaptors can be necessary.

4 The male shell specified in this International Standard does not contain the optional polarizing pin defined in IEC 60807-6.

5 Assignment of contact letters

The assignment of contact letters is given in table 1.

6 Connector shielding

Connector shielding is optional. If it is used, e.g. due to national regulations, etc., it shall be accomplished by use of

– a metallic male shell together with a connector housing and a cable adaptor with a DTE connector; or

– a metallic female shell with a DCE connector.

A polarization pin shall not be used on the male shell.

© ISO/IEC 2000 – All rights reserved
Copyright International Organization for Standardization
Provided by IHS under license with ISO
No reproduction or networking permitted without license from IHS
Not for Resale

Table 1 – Assignment of contact numbers

Contact	Function[1)]	CCITT circuit number	Direction
A	See note 1	**–**	**–**
B	Signal ground or common return	102	common
C	Request to send	105	from DTE
D	Ready for sending	106	to DTE
E	Data set ready	107	to DTE
F	Data channel received line signal detector	109	to DTE
H	Connect data set to line (see note 2)	108/1	from DTE
	Data terminal ready (see note 2)	108/2	from DTE
J	Calling indicator (see note 2)	125	to DTE
K	F_1	**–**	**–**
L	Local loopback (see note 2)	141	from DTE
M	F_1	**–**	**–**
N	Loopback/Maintenance test	140	from DTE
R	Received data A-wire	104	to DTE
T	Received data B-wire	104	to DTE
V	Receiver signal element timing (DCE source) A-wire	115	to DTE
X	Receiver signal element timing (DCE source) B-wire	115	to DTE
Y	Transmitter signal element timing (DCE source) A-wire	114	to DTE
AA	Transmitter signal element timing (DCE source) B-wire	114	to DTE
P	Transmitted data A-wire	103	from DTE
S	Transmitted data B-wire	103	from DTE
U	Transmitter signal element timing (DTE source) A-wire (see note 2)	113	from DTE
Z	F_2	**–**	**–**
W	Transmitter signal element timing (DTE source) B-wire (see note 2)	113	from DTE
BB	F_2	**–**	**–**
CC	F_3	**–**	**–**
DD	F_4	**–**	**–**
EE	F_3	**–**	**–**
FF	F_4	**–**	**–**
HH	N_1	**–**	**–**
JJ	N_2	**–**	**–**
KK	N_1	**–**	**–**
LL	N_2	**–**	**–**
MM	F	**–**	**–**
NN	Test indicator (see note 2)	142	to DTE

NOTES

1 Contact A is assigned for connecting the shields between tandem sections of the shielded interface cable. The shield may be connected either to protective ground or to signal ground at either the DTE or the DCE or both in accordance with national regulations.

Signal ground may further be connected to protective ground in accordance with national safety regulations. Caution should be exercised to prevent establishment of ground loops carrying high currents.

2 These functions are not included in ITU-T Recommendation V.36 but where implemented on an optional basis the assigned contacts should be used.

1) Legend:

N = Contact permanently reserved for national use

F = Contact reserved for future Standardization purposes and should not be used for national use

Subscripts indicate contacts which may be associated to form pairs; for example, F_1 on contact K and M form a pair.

--`,,```,,,,````-`-`,,`,,`,`,,`---

Copyright International Organization for Standardization
Provided by IHS under license with ISO
No reproduction or networking permitted without license from IHS
Not for Resale

© ISO/IEC 2000 – All rights reserved

Dimensions in millimetres

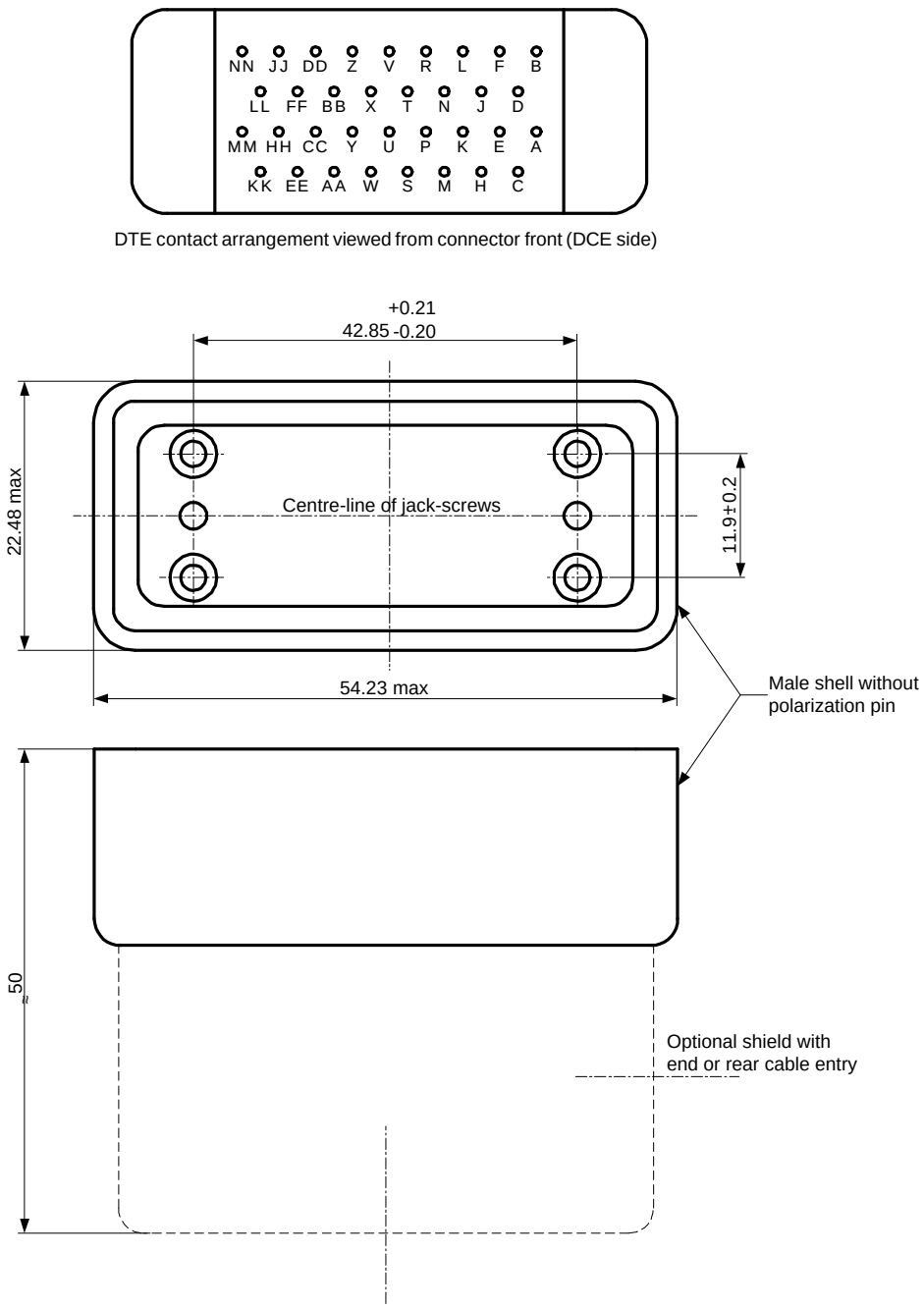

Figure 1 – DTE connector

--`,,```,,,,````-`-,,`,,`,`,,`---
© ISO/IEC 2000 – All rights reserved
Copyright International Organization for Standardization
Provided by IHS under license with ISO
No reproduction or networking permitted without license from IHS
Not for Resale

Dimensions in millimetres

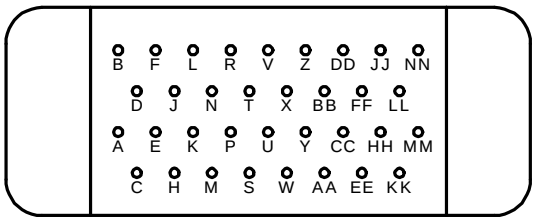

DCE contact arrangement viewed from connector front (DTE side)

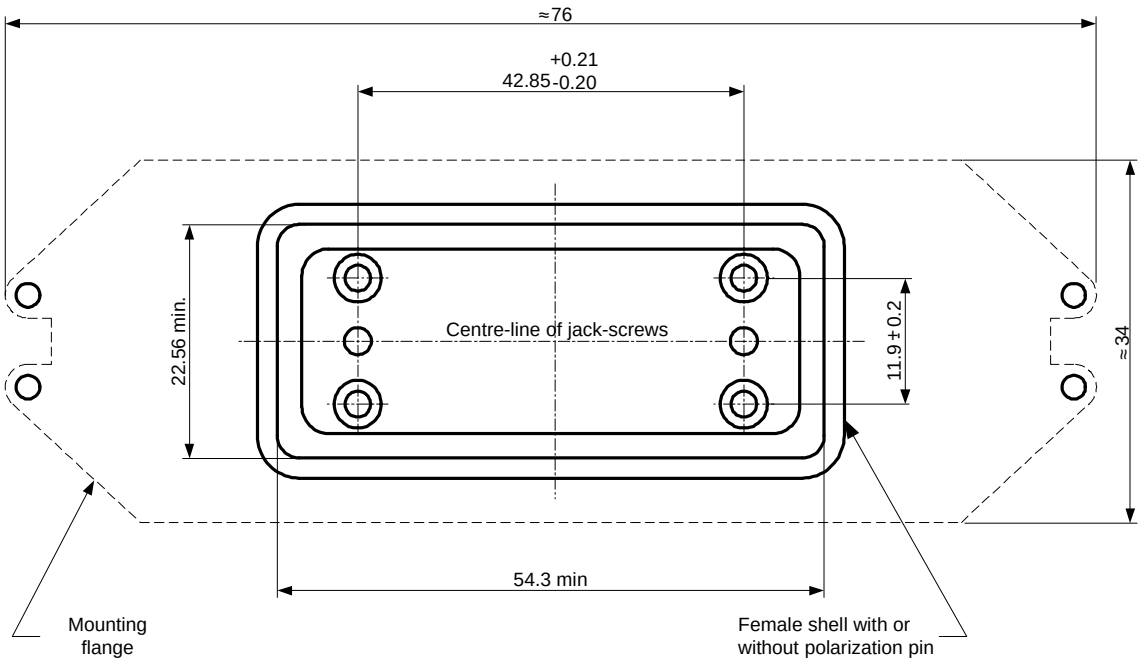

Figure 2 – DCE connector

© ISO/IEC 2000 – All rights reserved
Copyright International Organization for Standardization
Provided by IHS under license with ISO
No reproduction or networking permitted without license from IHS
Not for Resale

Dimensions in millimetres

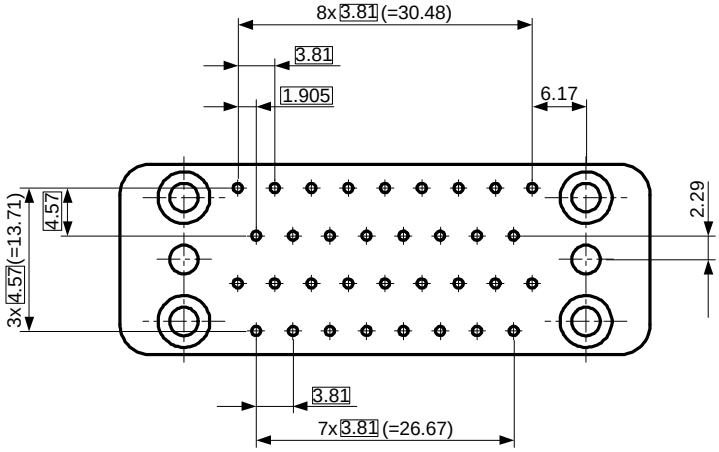

Figure 3 – Contact spacing dimensions

Dimensions in millimetres

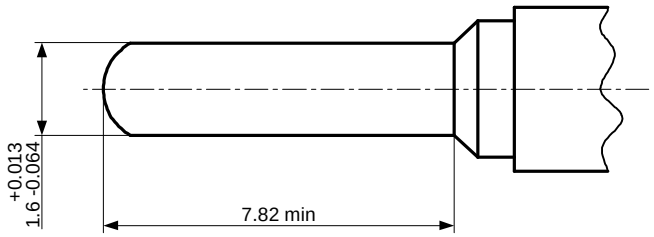

Figure 4 – Male contact

Dimensions in millimetres

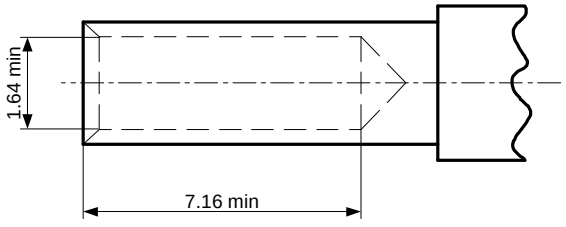

Figure 5 – Female contact

© ISO/IEC 2000 – All rights reserved
Copyright International Organization for Standardization
Provided by IHS under license with ISO
No reproduction or networking permitted without license from IHS
Not for Resale

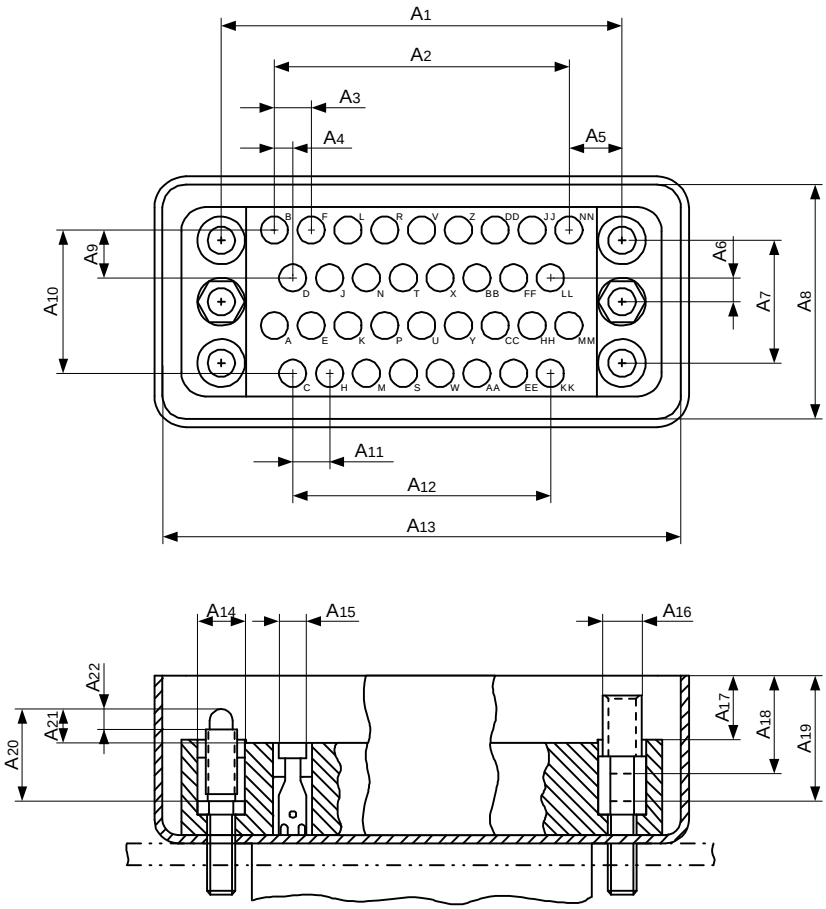

Figure 6 – DCE connector

Copyright International Organization for Standardization
Provided by IHS under license with ISO
No reproduction or networking permitted without license from IHS
Not for Resale
© ISO/IEC 2000 – All rights reserved

Table 2 – 34-pole DCE connector

Dimension	Millimetres		Inches	
	min.	max.	min.	max.
A_1	42,62	43,03	1,678	1,694
A_2	30,48		1,200	
A_3	3,81		0,150	
A_4	1,905		0,075	
A_5	6,17		0,243	
A_6	2,29		0,090	
A_7	11,70	12,10	0,460	0,476
A_8	22,56	–	0,888	–
A_9	4,57		0,180	
A_{10}	13,71		0,540	
A_{11}	3,81		0,150	
A_{12}	26,67		1,050	
A_{13}	54,30	–	2,138	–
A_{14} [1)]	4,85	5,10	0,191	0,201
A_{15}	Refer to Figure 5			
A_{15} depth	Refer to Figure 5			
A_{16}	4,57		0,180	
A_{17}	4,44	4,96	0,175	0,195
A_{18}	6,50	–	0,256	–
A_{19}	9,00	–	0,354	–
A_{20}	8,70	–	0,342	–
A_{21}	3,93	4,45	0,155	0,175
A_{22}	–	2,50	–	0,098

1) Inscribed diameter.

© ISO/IEC 2000 – All rights reserved

Copyright International Organization for Standardization
Provided by IHS under license with ISO
No reproduction or networking permitted without license from IHS
Not for Resale

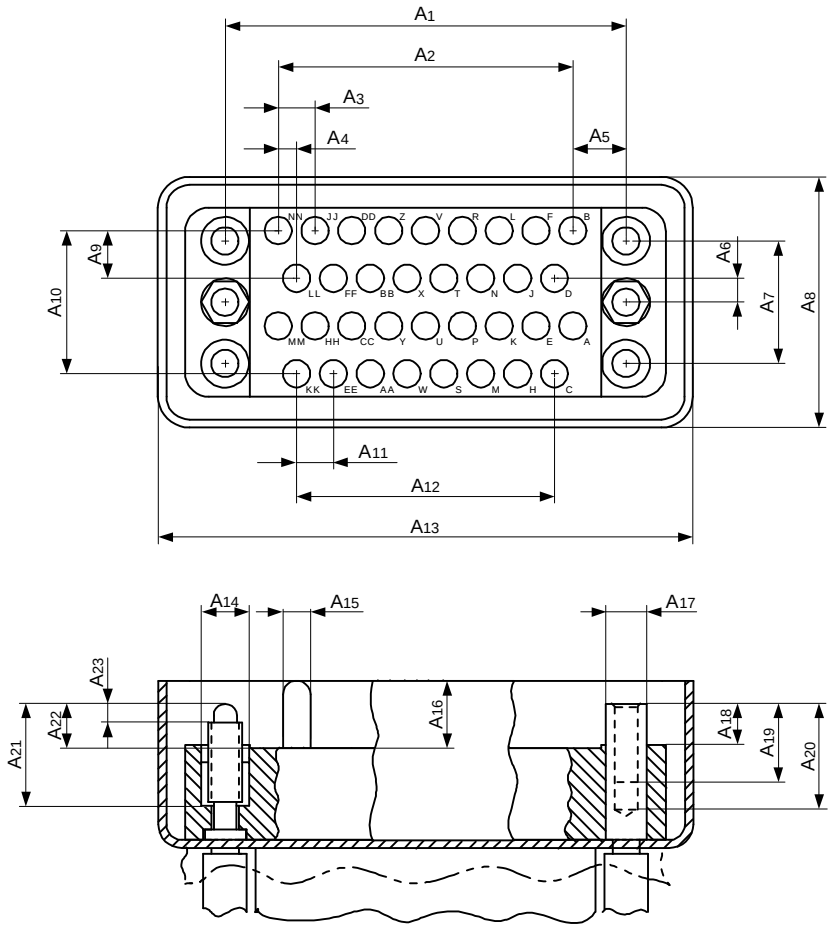

Figure 7 – DTE connector

© ISO/IEC 2000 – All rights reserved
Copyright International Organization for Standardization
Provided by IHS under license with ISO
No reproduction or networking permitted without license from IHS
Not for Resale

Table 3 – 34-pole DTE connector

Dimension	Millimetres		Inches	
	min.	max.	min.	max.
A_1	42,62	43,03	1,678	1,694
A_2	30,48		1,200	
A_3	3,81		0,150	
A_4	1,905		0,075	
A_5	6,17		0,243	
A_6	2,29		0,090	
A_7	11,70	12,10	0,460	0,476
A_8	–	22,48	–	0,885
A_9	4,57		0,180	
A_{10}	13,71		0,540	
A_{11}	3,81		0,150	
A_{12}	26,67		1,050	
A_{13}	–	54,23	–	2,135
A_{14}	4,85	5,10	0,191	0,201
A_{15}	Refer to Figure 4			
A_{16}	Refer to Figure 4			
A_{17}	4,57		0,180	
A_{18}	4,44	4,96	0,175	0,195
A_{19}	6,50	–	0,256	–
A_{20}	9,00	–	0,354	–
A_{21}	8,70	–	0,342	–
A_{22}	3,93	4,45	0,155	0,175
A_{23}	–	2,50	–	0,098

© ISO/IEC 2000 – All rights reserved

Copyright International Organization for Standardization
Provided by IHS under license with ISO
No reproduction or networking permitted without license from IHS
Not for Resale

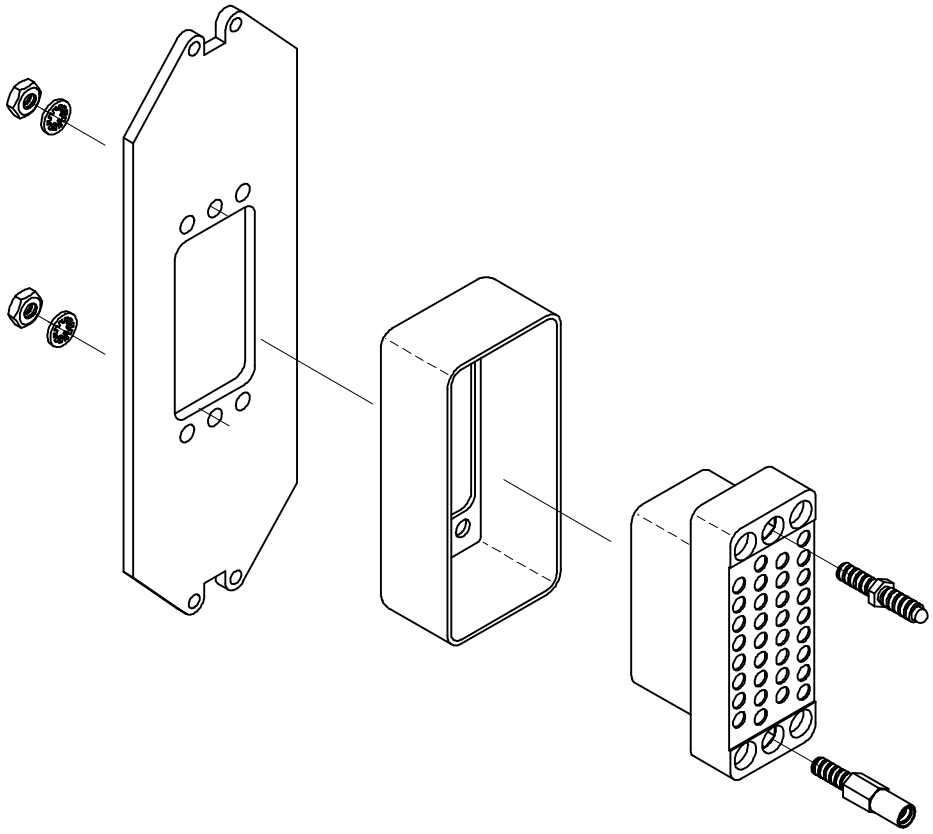

Figure 8 – DCE connector mounting illustration

© ISO/IEC 2000 – All rights reserved
Copyright International Organization for Standardization
Provided by IHS under license with ISO
No reproduction or networking permitted without license from IHS
Not for Resale

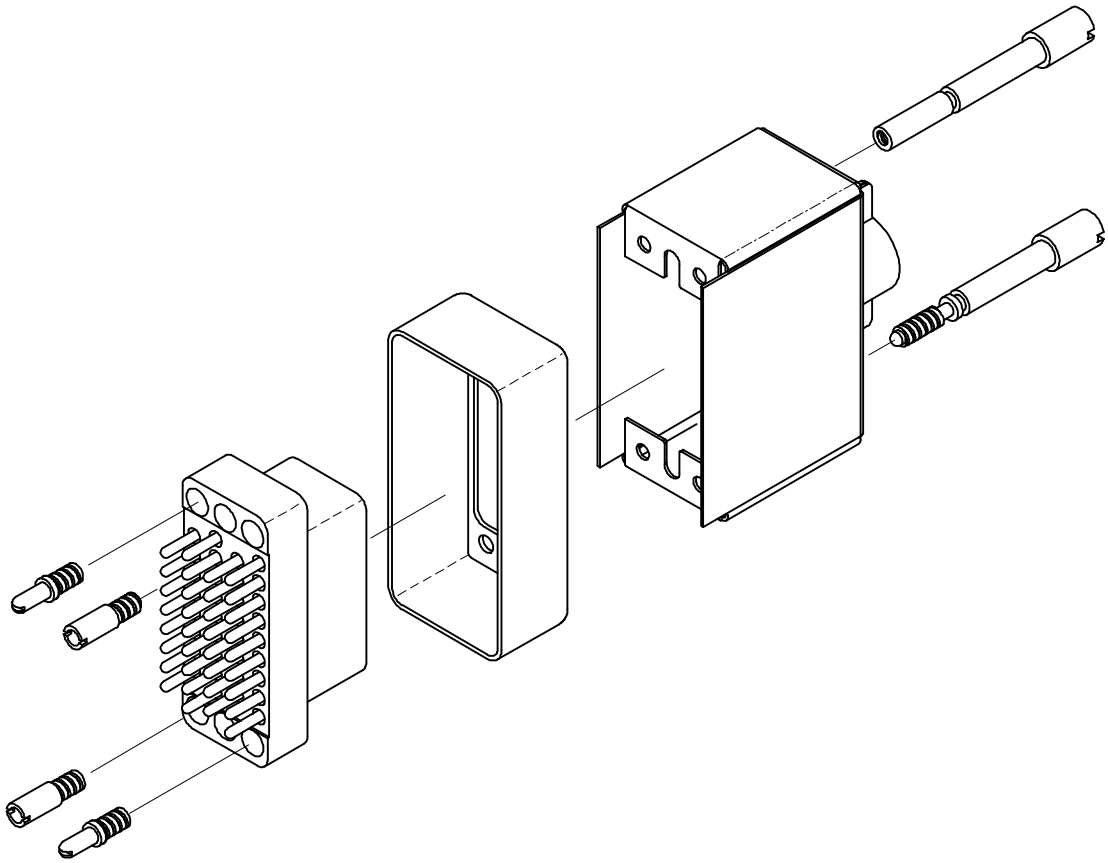

Figure 9 – DTE connector mounting illustration

--`,,```,,,,````-`-`,,`,,`,`,,`---

© ISO/IEC 2000 – All rights reserved

Copyright International Organization for Standardization
Provided by IHS under license with ISO
No reproduction or networking permitted without license from IHS

Not for Resale

Annex A
(normative)

Adaptor for attachment of DTEs using the 34-pole connector to DCEs not having implemented the 34-pole connector.

A.1 General

Wideband V.-series DCEs (modems) were specified by ITU-T for both the 34-pole rectangular ISO/IEC 2593 connector and the 37-pole rectangular ISO 4902 connector, while X.-series DCEs were specified for the 15-pole rectangular ISO 4903 connector. In this situation there is a need for suitable adaptors.

The electrical interface characteristics associated with the ISO/IEC 2593, ISO 4902 and ISO 4903 connectors are also different, but interworking between the versions is possible.

The means for interworking are passive.

This annex specifies passive adaptors for use by a DTE that has implemented a 34-pole rectangular ISO/IEC 2593 connector for attachment to a DCE that does not have a 34-pole connector.

Two adaptors are specified:

a) The first adaptor connects a 34-pole connector to a 37-pole rectangular ISO 4902 connector, if data transmission is performed via V.-series wideband modems using the 60 kHz to 108 kHz band circuits, or via ITU-T Recommendation X.21bis facilities on public data networks.

b) The second adaptor connects a 34-pole connector to a 15-pole rectangular ISO 4903 connector, if ITU-T Recommendation X.21 facilities are used which do not operate X.21 automatic calling/answering procedure, for instance, X.21 leased circuit facilities.

Both the 34/37-pole adaptor and the 34/15-pole adaptor have the means for electrical protection of the control interchange circuits.

The mechanical style of an adaptor is not defined and is left to the discretion of the manufacturers. It may take the form of two connectors joined by a short cable, or the same two connectors joined by a rigid housing.

A.2 Mechanical characteristics

Both adaptors use a 34-pole connector with female contacts, as specified in this International Standard (see figure 2). The 34/37-pole adaptor uses a 37-pole connector with male contacts, as specified in ISO 4902:1990, figure 1. The 34/15-pole adaptor uses a 15-pole connector with male contacts, as specified in ISO 4903:1989, figure 1.

A.3 Electrical characteristics

All wideband V.series DCEs are standardized for the use of balanced double-current electrical characteristics on data and timing interchange circuits and the use of unbalanced double-current electrical characteristics on the control interchange circuits. As further defined in X.21bis, the equivalent public data network facilities use the same.

Interworking in the balanced case is possible, if the interface cable is short (e.g. 10 m). Interworking in the unbalanced case requires means for protection of V.10 interchange circuit receivers. These means are described in ISO 4902:1990, annex C and ISO 4903:1989, annex C and are adopted in this International Standard.

A.4 Interworking specification

Provisions shall be made in the DTE/DCE interface to ensure secure interworking between V.28 generators in the DTE and V.10/V.11 receivers in the DCE (the receivers of V.10 are identical to those of V.11).

A.4.1 Signal return

The interface has two signal grounds, one for each transmission direction, circuit 102a and 102b. It may also have the direction-independent circuit 102. All these grounds shall be

--`,,```,,,,````-`-`,,`,,`,`,,`---

© ISO/IEC 2000 – All rights reserved
Copyright International Organization for Standardization
Provided by IHS under license with ISO
No reproduction or networking permitted without license from IHS
Not for Resale

interconnected within the adaptor as shown in tables A.1 and A.2.

A.4.2 Signal levels

The signal levels stated in V.10 and in V.28 have an overlap in the 5 V to 6 V range. However V.10 levels can be as low as 4 V, which is outside the V.28 specification. Nevertheless, satisfactory operation can be expected with V.28 receivers because they have a 3 V transition margin and because the source impedance of V.10 generators is very low.

A.4.3 Adaptor design

The actual method of adaptor design is not specified, except that the standardized locking devices in this International standard, ISO 4902 and ISO 4903 shall be used.

A.5 Connection arrangement

The connection arrangement of interchange circuits for the 34/37-pole and the 34/15-pole adaptor shall be as specified in table A.1 and table A.2, respectively.

--`,,```,,,,````-`-`,,`,,`,`,,`---

© ISO/IEC 2000 – All rights reserved

Copyright International Organization for Standardization
Provided by IHS under license with ISO
No reproduction or networking permitted without license from IHS
Not for Resale

Table A.1 – Connection of contacts for the 34/37-pole connector

Female contact	CCITT number	Interchange point	Male contact	Electrical characteristics
A	shields	–	1	–
B	102(a)(b)	C, C'	19[1)], 20[1)], 37[1)]	–
J	125	A	15	V.10
N	140	A'	14	V.10
L	141	A'	10	V.10
NN	142	A	18	V.10
C	105	A'	7	V.10/V.11
		B'	25[1)]	–
D	106	A	9	V.10/V.11
		B	27[1)]	–
E	107	A	11	V.10/V.11
		B	29[1)]	–
H	108	A'	12	V.10/V.11
		B'	30[1)]	–
F	109	A	13	V.10/V.11
		B	31[1)]	–
P	103-A	A'	4	V.11
S	103-B	B'	22	–
R	104-A	A	6	V.11
T	104-B	B	24	–
U	113-A	A'	17	V.11
W	113-B	B'	35	–
Y	114-A	A	5	V.11
AA	114-B	B	23	–
V	115-A	A	8	V.11
X	115-B	B	26	–

1) Contacts 19, 20, 25, 27, 29, 30, 31 and 37 shall be strapped together within the adaptor

© ISO/IEC 2000 – All rights reserved
Copyright International Organization for Standardization
Provided by IHS under license with ISO
No reproduction or networking permitted without license from IHS
Not for Resale

Table A.2 – Connection of contacts for the 34/15-pole adaptor

Female contact	CCITT number	Interchange point	Male contact	Remark
A	shields	–	–	–
B	102	C, C'	8[1)]	–
D	106	A	5	see note 1
		B	12[1)]	–
E	107	A	5	see note 1
		B	12[1)]	–
H	108/2	A'	3	see note 2
		B'	10[1)]	–
P	103-A	A'	2	–
S	103-B	B'	9	–
R	104-A	A	4	–
T	104-B	B	11	–
Y	114-A	A	6	see note 3
AA	114-B	B	13	–
V	115-A	A	6	see note 3
X	115-B	B	13	–

NOTES

1 Circuits 106 and 107 carry the same signal.

2 Restricted use. There is no circuit 125, calling indicator.

3 Circuits 114 and 115 carry the same signal.

1) Contacts 8, 10 and 12 shall be strapped together within the adaptor.

© ISO/IEC 2000 – All rights reserved

Copyright International Organization for Standardization
Provided by IHS under license with ISO
No reproduction or networking permitted without license from IHS
Not for Resale

Bibliography

[1] IEC 60807-7:1991, *Rectangular connectors for frequencies below 3 MHz — Part 7: Detail specification for a range of connectors with polarized guides or jack-screws and size 16(13 A) round contacts — Removable crimp contact types with closed crimp barrels, rear insertion/front release, with assessed quality*.

[2] ITU-T Recommendation V.37:1988, *Synchronous data transmission at a data signalling rate higher than 72 kbit/s using 60-108 kHz group band circuits*.

© ISO/IEC 2000 – All rights reserved
Copyright International Organization for Standardization
Provided by IHS under license with ISO
No reproduction or networking permitted without license from IHS
Not for Resale

ICS 35.100.10

Price based on 18 pages

© ISO/IEC 2000 – All rights reserved

Copyright International Organization for Standardization
Provided by IHS under license with ISO
No reproduction or networking permitted without license from IHS

Not for Resale