INTERNATIONAL STANDARD

ISO/IEC 23651

First edition
2003-08-01

Information technology — 8 mm wide magnetic tape cartridge for information interchange — Helical scan recording — AIT-3 format

Technologies de l'information — Cartouche de bande magnétique de 8 mm *de large pour échange d'informations — Enregistrement par balayage en spirale — Format AIT-3*

Reference number
ISO/IEC 23651:2003(E)

© ISO/IEC 2003

Copyright International Organization for Standardization
Provided by IHS under license with ISO
No reproduction or networking permitted without license from IHS

Not for Resale

PDF disclaimer

This PDF file may contain embedded typefaces. In accordance with Adobe's licensing policy, this file may be printed or viewed but shall not be edited unless the typefaces which are embedded are licensed to and installed on the computer performing the editing. In downloading this file, parties accept therein the responsibility of not infringing Adobe's licensing policy. The ISO Central Secretariat accepts no liability in this area.

Adobe is a trademark of Adobe Systems Incorporated.

Details of the software products used to create this PDF file can be found in the General Info relative to the file; the PDF-creation parameters were optimized for printing. Every care has been taken to ensure that the file is suitable for use by ISO member bodies. In the unlikely event that a problem relating to it is found, please inform the Central Secretariat at the address given below.

© ISO/IEC 2003

All rights reserved. Unless otherwise specified, no part of this publication may be reproduced or utilized in any form or by any means, electronic or mechanical, including photocopying and microfilm, without permission in writing from either ISO at the address below or ISO's member body in the country of the requester.

ISO copyright office
Case postale 56 • CH-1211 Geneva 20
Tel. + 41 22 749 01 11
Fax + 41 22 749 09 47
E-mail copyright@iso.org
Web www.iso.org

Published in Switzerland

--`,,`-`-`,,`,,`,`,,`---

Copyright International Organization for Standardization
Provided by IHS under license with ISO
No reproduction or networking permitted without license from IHS

© ISO/IEC 2003 – All rights reserved

Not for Resale

Contents

Section 1 - General **1**

1 Scope **1**

2 Conformance **1**
2.1 Magnetic tape cartridge **1**
2.2 Generating drive **1**
2.3 Receiving drive **1**

3 Normative references **2**

4 Terms and definitions **2**
4.1 Absolute Frame Number (AFN) **2**
4.2 a.c. erase **2**
4.3 Access **2**
4.4 algorithm **2**
4.5 Area ID **2**
4.6 Automatic Track Finding (ATF) **2**
4.7 Average Signal Amplitude **2**
4.8 azimuth **2**
4.9 back surface **2**
4.10 byte **2**
4.11 cartridge **2**
4.12 Channel bit **3**
4.13 Codeword **3**
4.14 Early Warning Point (EWP) **3**
4.15 End of Data (EOD) **3**
4.16 Entity **3**
4.17 Error Correcting Code (ECC) **3**
4.18 flux transition position **3**
4.19 flux transition spacing **3**
4.20 Frame **3**
4.21 Housekeeping Frame **3**
4.22 Logical Beginning of Tape (LBOT) **3**
4.23 magnetic tape **3**
4.24 Master Standard Amplitude Calibration Tape **3**
4.25 Master Standard Reference Tape **3**
4.26 Partition Boundary **3**
4.27 Physical Beginning of Tape (PBOT) **3**
4.28 Physical End of Tape (PEOT) **4**
4.29 physical recording density **4**
4.30 pre-recording condition **4**
4.31 processing **4**
4.32 processed data **4**
4.33 Processed Record **4**
4.34 record **4**
4.35 Reference Field **4**
4.36 Remote Memory In Cartridge (RMIC) **4**
4.37 Secondary Standard Amplitude Calibration Tape **4**
4.38 Secondary Standard Reference Tape **4**

© ISO/IEC 2003 – All rights reserved

Copyright International Organization for Standardization
Provided by IHS under license with ISO
No reproduction or networking permitted without license from IHS
Not for Resale

4.39 Separator Mark **4**
4.40 Standard Reference Amplitude (SRA) **4**
4.41 Standard Reference Current **4**
4.42 Tape Reference Edge **4**
4.43 Test Recording Current **4**
4.44 track **5**
4.45 Typical Field **5**
4.46 unprocessed data **5**
4.47 Unprocessed Record **5**

5 Conventions and Notations **5**
5.1 Representation of numbers **5**
5.2 Names **5**

6 Acronyms **5**

7 Environment and safety **6**
7.1 Test environment **6**
7.2 Operating environment **6**
7.3 Storage environment **6**
7.4 Transportation **6**
7.5 Safety **6**
7.6 Flammability **6**

Section 2 - Requirements for the case **6**

8 Dimensional and mechanical characteristics of the case **6**
8.1 General **6**
8.2 Overall dimension **7**
8.3 Holding areas **7**
8.4 Cartridge insertion **8**
8.5 Window **8**
8.6 Loading grips **9**
8.7 Label areas **9**
8.8 Datum areas and Datum holes **9**
8.9 Support areas **10**
8.10 Recognition holes **10**
8.11 Write-inhibit hole **11**
8.12 Pre-positioning surfaces **12**
8.13 Cartridge lid **12**
8.14 Cartridge reel lock **13**
8.15 Reel access holes **14**
8.16 Interface between the reels and the drive spindles **14**
8.17 Light path **15**
8.18 Position of the tape in the case **16**
8.19 Tape path zone **16**
8.20 Tape access cavity **16**
8.21 Tape access cavity clearance **17**
8.22 Requirements for the RMIC **17**
8.23 Recognition recesses **18**

Section 3 - Requirements for the unrecorded tape **38**

9 Mechanical, physical and dimensional characteristics of the tape **38**
9.1 Materials **38**
9.2 Tape length **38**

© ISO/IEC 2003 – All rights reserved
Copyright International Organization for Standardization
Provided by IHS under license with ISO
No reproduction or networking permitted without license from IHS
Not for Resale

9.2.1 Length of magnetic tape **38**
9.2.2 Length of leader and trailer tapes **38**
9.2.3 Length of the splicing tapes **38**
9.3 Tape width **38**
9.3.1 Width of magnetic, leader and trailer tapes **38**
9.3.2 Width and position of the splicing tape **38**
9.4 Discontinuities **39**
9.5 Tape thickness **39**
9.5.1 Thickness of the magnetic tape **39**
9.5.2 Thickness of the leader and trailer tape **39**
9.5.3 Thickness of the splicing tape **39**
9.6 Longitudinal curvature **39**
9.7 Cupping **39**
9.8 Coating adhesion **39**
9.9 Layer-to-layer adhesion **40**
9.10 Tensile strength **40**
9.10.1 Breaking strength **40**
9.10.2 Yield strength **40**
9.11 Residual elongation **40**
9.12 Electrical resistance of the recording surface **40**
9.13 Tape winding **41**
9.14 Light transmittance of the tape **41**
9.15 Recognition stripe **41**

10 Magnetic recording characteristics **42**
10.1 Typical Field **42**
10.2 Signal Amplitude **42**
10.3 Resolution **43**
10.4 Overwrite **43**
10.5 Ease of erasure **43**
10.6 Tape quality **43**
10.6.1 Missing pulses **43**
10.6.2 Missing pulse zone **43**
10.7 Signal-to-Noise Ratio (SNR) characteristic **43**

Section 4 - Requirements for an interchanged tape **44**

11 Format **44**
11.1 General **44**
11.2 Basic Groups **44**
11.2.1 Entity **45**
11.2.2 Group Information Table **45**
11.2.3 Block Access Table (BAT) **48**
11.3 Sub-Groups **50**
11.3.1 G1 Sub-Group **50**
11.3.2 G2 Sub-Group - Randomizing **51**
11.3.3 G3 Sub-Group **52**
11.4 Data Block **53**
11.4.1 ID information **53**
11.4.2 Recording of the ID Information in the Data Block Headers **56**

12 Method of recording **61**
12.1 Physical recording density **62**
12.2 Long-term average bit cell length **62**
12.3 Short-term average bit cell length **62**
12.4 Rate of change **62**

© ISO/IEC 2003 – All rights reserved

Copyright International Organization for Standardization
Provided by IHS under license with ISO
No reproduction or networking permitted without license from IHS
Not for Resale

12.5 Bit shift **62**
12.6 Read signal amplitude **62**
12.7 Maximum recorded levels **62**

13 Track geometry **62**
13.1 Track configuration **62**
13.2 Average track pitch **63**
13.3 Variations of the track pitch **63**
13.4 Track width **63**
13.5 Track angle **63**
13.6 Track edge straightness **63**
13.7 Track length **63**
13.8 Azimuth angles **63**

14 Recorded patterns **64**
14.1 Recorded Data Block **64**

15 Format of tracks **64**
15.1 Track structure **64**
15.2 Positioning accuracy **64**
15.3 Tracking scheme **64**
15.4 Generation of Margin Blocks **65**

16 Layout of the tape **66**
16.1 Device Area **66**
16.2 Reference Area **67**
16.3 Position Tolerance Band No. 1 **67**
16.4 System Area **67**
16.4.1 System Preamble **67**
16.4.2 System Log **67**
16.4.3 System Postamble **72**
16.4.4 Position Tolerance Band No. 2 **72**
16.4.5 Vendor Group Preamble **72**
16.5 Data Area **72**
16.5.1 Vendor Group **72**
16.5.2 Recorded Data Group **72**
16.5.3 ECC3 **73**
16.5.4 Multiple Recorded Instances **74**
16.5.5 Repeated Frames **74**
16.5.6 Appending and overwriting **75**
16.6 EOD Area **76**
16.7 Optional Device Area **76**
16.8 Logical End Of Tape (LEOT) **77**
16.9 Logical Beginning of Tape (LBOT) **77**
16.10 Early Warning Point - EWP **77**
16.11 Empty Partition **77**
16.12 Initialization **77**

17 Housekeeping Frames **78**
17.1 Amble Frames **78**
17.2 System Amble Frames **78**

18 AIT Remote Memory In Cartridge (AIT RMIC) **78**
18.1 General **78**
18.2 Content of the AIT RMIC **78**
18.2.1 Manufacturer's Information Section **79**

© ISO/IEC 2003 – All rights reserved
Copyright International Organization for Standardization
Provided by IHS under license with ISO
No reproduction or networking permitted without license from IHS
Not for Resale

18.2.2 Communication Information Section **82**
18.2.3 Mechanism Error Log Information Section **82**
18.2.4 Memory Management Information Section **83**
18.2.5 Volume Information Section **84**
18.2.6 Volume Use History Information Section **85**
18.3 Memory Heap Management **85**
18.3.1 Cell **85**
18.3.2 Cell Header **85**
18.3.3 Partition Information Cell **87**
18.3.4 Physical Tape Directory Information Cell **87**
18.3.5 User Volume Information Cell **88**
18.3.6 User Partition Information Cell **88**
18.3.7 Application Information Cell **89**
18.3.8 Date and Time Stamp Information Cell **90**
18.3.9 Media Identification Information Cell **91**
18.3.10 Tape Alert Information Cell **91**
18.4 Electrical interface **92**
18.5 Environment **92**
18.5.1 Electromagnetic Compatibility **92**
18.5.2 Magnetic fields **92**
18.5.3 X-rays **92**
18.6 Operating Field **92**
18.7 Message from AIT RMIC reader-writer to AIT RMIC **92**
18.8 Message from AIT RMIC to AIT RMIC reader-writer **93**
18.8.1 Load modulation **94**
18.9 EDC **95**
18.10 AIT RMIC states **95**
18.11 Command and Response **96**
18.11.1 Attention Command and Response **97**
18.11.2 Attention Command and Response Type 1 **97**
18.11.3 Attention Command and Response Type 2 **97**
18.11.4 Read Command and Response **98**
18.11.5 Write Command and Response **98**
18.11.6 Status Command and Response **98**
18.11.7 Reset Command and Response **99**
18.12 Dialogue **99**
18.12.1 Read data from AIT RMIC **99**
18.12.2 Write data to AIT RMIC **100**
18.12.3 Read and Write with Session ID **101**

Annexes

A (normative) - Measurement of light transmittance 105

B (normative) - Measurement of Signal-to-Noise Ratio 108

C (normative) - Method for determining the nominal and the maximum allowable recorded levels (pre-recording condition) 109

D (normative) - Representation of 16-bit words by 18-Channel bits patterns 110

E (normative) - Measurement of bit shift 111

F (normative) - Method of measuring the straightness of track edges 113

G (normative) - ECC calculation 114

H (informative) - Recommendations for transportation 117

J (informative) - Read-After-Write 118

--`,,`-`-`,,`,,`,`,,`---

© ISO/IEC 2003 – All rights reserved

Copyright International Organization for Standardization
Provided by IHS under license with ISO
No reproduction or networking permitted without license from IHS Not for Resale

K (informative) - Basic Group No. 0 **119**

L (informative) - Chip for the AIT-3 format **120**

M (informative) - Generation of EDC bytes for the Error Detecting Code for G2 Sub-Groups **121**

© ISO/IEC 2003 – All rights reserved
Copyright International Organization for Standardization
Provided by IHS under license with ISO
No reproduction or networking permitted without license from IHS
Not for Resale

Foreword

ISO (the International Organization for Standardization) and IEC (the International Electrotechnical Commission) form the specialized system for worldwide standardization. National bodies that are members of ISO or IEC participate in the development of International Standards through technical committees established by the respective organization to deal with particular fields of technical activity. ISO and IEC technical committees collaborate in fields of mutual interest. Other international organizations, governmental and non-governmental, in liaison with ISO and IEC, also take part in the work. In the field of information technology, ISO and IEC have established a joint technical committee, ISO/IEC JTC 1.

International Standards are drafted in accordance with the rules given in the ISO/IEC Directives, Part 2.

The main task of the joint technical committee is to prepare International Standards. Draft International Standards adopted by the joint technical committee are circulated to national bodies for voting. Publication as an International Standard requires approval by at least 75 % of the national bodies casting a vote.

ISO/IEC 23651 was prepared by ECMA (as ECMA-329) and was adopted, under a special “fast-track procedure”, by Joint Technical Committee ISO/IEC JTC 1, *Information technology*, in parallel with its approval by national bodies of ISO and IEC.

© ISO/IEC 2003 – All rights reserved

Copyright International Organization for Standardization
Provided by IHS under license with ISO
No reproduction or networking permitted without license from IHS
Not for Resale

--`,,,`-`-`,,`,,`,`,,,`---

Copyright International Organization for Standardization
Provided by IHS under license with ISO
No reproduction or networking permitted without license from IHS

Not for Resale

Information technology — 8 mm wide magnetic tape cartridge for information interchange — Helical scan recording — AIT-3 format

Section 1 - General

1 Scope

This International Standard specifies the physical and magnetic characteristics of an 8 mm wide magnetic tape cartridge containing a memory chip to enable physical interchange of such cartridges between drives. It also specifies the quality of the recorded signals, the recording method and the recorded format - called Advanced Intelligent Tape No. 3 (AIT-3 format) - thereby allowing data interchange between drives by means of such magnetic tape cartridges.

This International Standard specifies two types of cartridge depending on the thickness of the magnetic tape contained in the case.

Information interchange between systems also requires, at a minimum, agreement between the interchange parties upon the interchange code(s) and the specifications of the structure and labelling of the information on the interchanged cartridge.

2 Conformance

2.1 Magnetic tape cartridge

A tape cartridge shall be in conformance with this International Standard if it meets all the mandatory requirements specified herein. The tape requirements shall be satisfied throughout the extent of the tape.

2.2 Generating drive

A drive generating a magnetic tape cartridge for interchange shall be in conformance with this International Standard if all recordings on the tape meet the mandatory requirements of this International Standard, and if either one or both methods of appending and overwriting are implemented. In addition, such a drive shall be able to record the System Log in the AIT Remote Memory In Cartridge (AIT RMIC).

A claim of conformance shall state which of the following optional features are implemented and which are not

- the performing of a Read-After-Write check and the recording of any necessary repeated frames;
- the generation of ECC3 Frames.

In addition a claim of conformance shall state

- whether or not one, or more, registered algorithm(s) are implemented within the system and are able to compress data received from the host prior to collecting the data into Basic Groups, and
- the registered identification number(s) of the implemented compression algorithm(s).

2.3 Receiving drive

A drive receiving a magnetic tape cartridge for interchange shall be in conformance with this International Standard if it is able to handle any recording made on the tape according to this International Standard. In particular it shall

- be able to read the System Log recorded in the AIT RMIC;
- be able to recognise repeated frames, and to make available to the host, data and Separator Marks from only one of these frames;
- be able to recognise multiple representations of the same Basic Group, and to make available to the host, data and Separator Marks from only one of these representations;
- be able to recognise an ECC3 frame, and ignore it if the system is not capable of using ECC3 check bytes in a process of error correction;
- be able to recognise processed data within an Entity, identify the algorithm used, and make its registered identification number available to the host;
- be able to make processed data available to the host.

In addition a claim of conformance shall state

- whether or not the system is capable of using ECC3 check bytes in a process of error correction;

© ISO/IEC 2003 – All rights reserved

Copyright International Organization for Standardization
Provided by IHS under license with ISO
No reproduction or networking permitted without license from IHS Not for Resale

– whether or not one or more de-compression algorithm(s) are implemented within the system, and are able to be applied to compressed data prior to making such data available to the host;

– the registered identification number(s) of the compression algorithm(s) for which a complementary de-compression algorithm is implemented.

3 Normative references

The following referenced documents are indispensable for the application of this document. For dated references, only the edition cited applies. For undated references, the latest edition of the referenced document (including any amendments) applies.

ISO 527 (all parts) *Plastics — Determination of tensile properties*

ISO 1302:2002 *Geometrical Product Specifications (GPS) — Indication of surface texture in technical product documentation*

ISO/IEC 11576:1994 *Information technology — Procedure for the registration of algorithms for the lossless compression of data*

4 Terms and definitions

For the purposes of this document, the following terms and definitions apply.

4.1 Absolute Frame Number (AFN)

A sequence number encoded in a Frame.

4.2 a.c. erase

A process of erasure using magnetic fields of decaying intensity.

4.3 Access

A read or write pass over a partition.

4.4 algorithm

A set of rules for transforming the logical representation of data.

4.5 Area ID

An identifier defining the area of the tape and specifying the types of Frame written.

4.6 Automatic Track Finding (ATF)

The method by which tracking is achieved.

4.7 Average Signal Amplitude

The average peak-to-peak value of the output signal from the read head at the fundamental frequency of the specified physical recording density over a minimum of 20,0 mm of track, exclusive of missing pulses.

4.8 azimuth

The angular deviation made by the mean flux transition line with a line normal to the centreline of the recorded track.

4.9 back surface

The surface of the tape opposite to the magnetic coating which is used to record data.

4.10 byte

An ordered set of bits acted upon as a unit.

4.11 cartridge

A case containing magnetic tape stored on twin hubs.

© ISO/IEC 2003 – All rights reserved
Copyright International Organization for Standardization
Provided by IHS under license with ISO
No reproduction or networking permitted without license from IHS
Not for Resale

4.12 Channel bit

The elements by which, after modulation, the binary values ZERO and ONE are represented on tape by different residual magnetism.

4.13 Codeword

A word generated by a compression algorithm. The number of bits in a Codeword is variable, and is not specified by this International Standard.

4.14 Early Warning Point (EWP)

A point along the length of the tape at which warning is given of the approach, in the forward direction of tape motion, of the Partition Boundary or of the Physical End of Tape.

4.15 End of Data (EOD)

The point on the tape at the end of the group which contains the last user data.

4.16 Entity

A unit of recorded data, comprising an Entity Header and a Record sequence.

4.17 Error Correcting Code (ECC)

A mathematical computation yielding check bytes used for the detection and correction of errors.

4.18 flux transition position

That point which exhibits maximum free-space flux density normal to the tape surface.

4.19 flux transition spacing

The distance along a track between successive flux transitions.

4.20 Frame

A pair of adjacent tracks with azimuths of opposite polarity, in which the track with the positive azimuth precedes that with the negative azimuth.

4.21 Housekeeping Frame

A Frame which contains no user data and which is identified as such by the setting of the Data Fields therein.

4.22 Logical Beginning of Tape (LBOT)

The point along the length of the tape where a recording of data for interchange commences.

4.23 magnetic tape

A tape which will accept and retain the magnetic signals intended for input, output and storage purposes on computers and associated equipment.

4.24 Master Standard Amplitude Calibration Tape

A pre-recorded tape on which the standard signal amplitudes have been recorded in the tracks of positive and negative azimuth recorded at a track pitch of 5,5 μm, on an a.c. erased tape.

Note 1 - The tape includes recording at 1 718,2 ftpmm and 3 436,4 ftpmm.

Note 2 - The Master Standard Amplitude Calibration Tape has been established by Sony Corporation.

4.25 Master Standard Reference Tape

A tape selected as the standard for the Reference Recording Field, Signal Amplitude, Resolution, Overwrite and Signal-to-Noise ratio.

Note - The Master Standard Reference Tape has been established by Sony Corporation.

4.26 Partition Boundary

The point along the length of a magnetic tape at which a Partition ends and the next Partition commences.

4.27 Physical Beginning of Tape (PBOT)

The point where the leader tape is joined to the magnetic tape.

© ISO/IEC 2003 – All rights reserved

Copyright International Organization for Standardization
Provided by IHS under license with ISO
No reproduction or networking permitted without license from IHS
Not for Resale

4.28 Physical End of Tape (PEOT)

The point where the trailer tape is joined to the magnetic tape.

4.29 physical recording density

The number of recorded flux transitions per unit length of track, expressed in flux transitions per millimetre (ftpmm).

4.30 pre-recording condition

The recording levels above which a tape intended for interchange shall not previously have been recorded.

4.31 processing

The use of an algorithm to transform host data into Codewords.

4.32 processed data

A sequence of Codewords which results from the application of processing to data.

4.33 Processed Record

A sequence of Codewords which results from the application of processing to an Unprocessed Record.

4.34 record

Related data treated as a unit of information.

4.35 Reference Field

The Typical Field of the Master Standard Reference Tape.

4.36 Remote Memory In Cartridge (RMIC)

A chip within the case containing information about the cartridge and its recordings that is accessed by radio frequency communication.

4.37 Secondary Standard Amplitude Calibration Tape

A tape pre-recorded as specified for the Master Standard Amplitude Calibration Tape the outputs of which are related to those of the Master Standard Amplitude Calibration Tape by calibration factors.

Note - Secondary Standard Amplitude Calibration Tapes can be ordered under Part No. SSCT-AIT-3 from Sony Corporation, RME Company, Data Media Marketing Div. 6-7-35 Kitashinagawa, Shinagawa-ku, Tokyo 141, Japan. In principle such Secondary Standard Amplitude Calibration Tapes will be available for a period of 10 years from the publication of the first Edition of this International Standard. However, by agreement between ECMA and Sony Corporation, this period can be shortened or extended to take into account the demand for such Secondary Standard Amplitude Calibration Tapes.

4.38 Secondary Standard Reference Tape

A tape the outputs of which are related to those of the Master Standard Reference Tape by calibration factors.

Note - Secondary Standard Reference Tapes can be ordered under Part No. SSRT-AIT-3 from Sony Corporation, RME Company, Data Media Marketing Div., 6-7-35 Kitashinagawa, Shinagawa-ku, Tokyo 141, Japan. In principle such Secondary Standard Reference Tapes will be available for a period of 10 years from the publication of the first Edition of this International Standard. However, by agreement between ECMA and Sony Corporation, this period can be shortened or extended to take into account the demand for such Secondary Standard Reference Tapes.

It is intended that these be used for calibrating tertiary reference tapes for use in routine calibration.

4.39 Separator Mark

A record containing no user data, which is used to separate data.

4.40 Standard Reference Amplitude (SRA)

The Average Signal Amplitude from the tracks of positive azimuth of the Master Standard Amplitude Calibration Tape at a specified physical recording density.

4.41 Standard Reference Current

The current that produces the Reference Field.

4.42 Tape Reference Edge

The bottom edge of the tape when viewing the recording side of the tape, with the PEOT to the observer's right.

4.43 Test Recording Current

The current used to record an SRA. It is 1,5 times the Standard Reference Current.

© ISO/IEC 2003 – All rights reserved
Copyright International Organization for Standardization
Provided by IHS under license with ISO
No reproduction or networking permitted without license from IHS
Not for Resale

4.44 track

A diagonally positioned area on the tape along which a series of magnetic signals may be recorded.

4.45 Typical Field

In the plot of Average Signal Amplitude against the recording field at the physical recording density of 3 436,4 ftpmm, the minimum field that causes an Average Signal Amplitude equal to 90 % of the maximum Average Signal Amplitude.

4.46 unprocessed data

Data which has not been subjected to processing.

4.47 Unprocessed Record

A record of unprocessed data, comprising an integral number of bytes.

5 Conventions and Notations

5.1 Representation of numbers

A measured value is rounded off to the least significant digit of the corresponding specified value. This implies that, for example, a specified value of 1,26 with a positive tolerance of +0,01 and a negative tolerance of -0,02 allows a range of measured values from 1,235 to 1,275.

Letters and digits in parentheses represent numbers in hexadecimal notation.

Letters and digits in square parentheses represent numbers in BCD notation.

The setting of a bit is denoted by ZERO or ONE.

Bit patterns and numbers in binary notation are represented by strings of digits 0 and 1. Within such strings, x may be used to indicate that the setting of a bit is not specified within the string.

Bit patterns and numbers in binary notation are shown with the most significant bit to the left and the least significant bit to the right.

The most significant bit of an 8-bit byte is denoted by b_8 and the least significant by b_1.

5.2 Names

The names of basic elements, e.g. specific fields, are given with a capital initial letter.

6 Acronyms

AEWP	After Early Warning Point
AFN	Absolute Frame Number
ATF	Automatic Tracking Finding
BAT	Block Access Table
BCD	Binary Coded Decimal
ECC	Error Correcting Code
EOD	End of Data
EWP	Early Warning Point
GIT	Group Information Table
LBOT	Logical Beginning of Tape
LEOT	Logical End of Tape
LSB	Least Significant Byte
LF-ID	Logical Frame Identifier
MSB	Most Significant Byte
MSRT	Master Standard Reference Tape
PBOT	Physical Beginning of Tape
PEOT	Physical End of Tape
RAW	Read-After-Write
RMIC	Remote Memory In Cartridge
SNR	Signal-to-Noise Ratio
WORM	Write Once Read Many
msb	Most significant bit

© ISO/IEC 2003 – All rights reserved

Copyright International Organization for Standardization
Provided by IHS under license with ISO
No reproduction or networking permitted without license from IHS
Not for Resale

7 Environment and safety

7.1 Test environment

Tests and measurements made on the tape cartridge to check the requirements of this International Standard shall be carried out in the following ambient conditions of the air immediately surrounding the drive.

temperature : 23 °C ± 2 °C
relative humidity : 40 % to 60 %
conditioning period before testing : 24 h min.

7.2 Operating environment

Cartridges used for data interchange shall be capable of operating under the following conditions, as measured within 10 mm of the tape exit from the drum of the generating or receiving drive:

temperature : 5 °C to 45 °C
relative humidity : 20 % to 80 %
wet bulb temperature : 26 °C max.

There shall be no deposit of moisture on or in the cartridge.

The above conditions include any temperature rise that may occur while operating the drive.

Conditioning before operating:

If a cartridge has been exposed during storage and/or transportation to a condition outside the above values, before use the cartridge shall be conditioned in the operating environment for a time at least equal to the period during which it has been out of the operating environment, up to a maximum of 24 h.

Note - Rapid variations of temperature should be avoided.

7.3 Storage environment

The following conditions shall be observed during storage

temperature : 5 °C to 32 °C
relative humidity : 20 % to 60 %

The stray magnetic field at any point on the tape shall not exceed 4000 A/m. There shall be no deposit of moisture on or in the cartridge.

7.4 Transportation

Recommended limits for the environment to which a cartridge may be subjected during transportation, and the precautions to be taken to minimise the possibility of damage, are provided in annex H.

7.5 Safety

The cartridge and its components shall satisfy the requirements of Standard ECMA-287. The cartridge and its components shall not constitute any safety or health hazard when used in the intended manner, or through any foreseeable misuse in an information processing system.

7.6 Flammability

The cartridge and its components shall be made from materials, which if ignited from a match flame, do not continue to burn in a still carbon dioxide atmosphere.

Section 2 - Requirements for the case

8 Dimensional and mechanical characteristics of the case

8.1 General

Dimensional characteristics are specified for those parameters deemed to be mandatory for interchange and compatible use of the cartridge. Where there is freedom of design, only the functional characteristics of the elements described are indicated. In the figures a typical implementation is represented in third angle projection.

Figure 1 is a perspective view of the cartridge seen from the top.
Figure 2 is a perspective view of the cartridge seen from the bottom.

© ISO/IEC 2003 – All rights reserved
Copyright International Organization for Standardization
Provided by IHS under license with ISO
No reproduction or networking permitted without license from IHS
Not for Resale

Figure 3 is a perspective view of Reference Planes X, Y and Z.
Figure 4 shows the front side with the lid closed.
Figure 5 shows the left side with the lid closed.
Figure 6 shows the top side with the lid closed.
Figure 7 shows the right side with the lid closed.
Figure 8 shows the rear side with the lid closed.
Figure 9 shows the bottom side, Datum and Support areas.
Figure 10 shows the bottom side with the lid removed.
Figure 11 shows an enlarged view of the Datum and Recognition holes.
Figure 12 shows the cross-sections through the light path holes, the Recognition holes and the Write-inhibit hole.
Figure 13 shows details of the lid when closed, rotating and open.
Figure 14 shows the details of the lid release insertion channel.
Figure 15 shows the lid lock release requirements.
Figure 16 shows the reel lock release requirements.
Figure 17 shows the reel unlock force direction.
Figure 18 shows the lid release force direction.
Figure 19 shows the lid opening force direction.
Figure 20 shows the light path and light window.
Figure 21 shows the internal tape path and light path.
Figure 22 shows the cartridge reel and a cross-section of the cartridge reel.
Figure 23 shows a cross-section of the interface of the cartridge reel with the drive spindle.
Figure 24 shows the tape access cavity clearance.
Figure 25 shows the Access Holes of the RMIC on the rear side.
Figure 26 shows the Access Holes of the RMIC on the bottom side.

The dimensions are referred to three orthogonal Reference Planes X, Y and Z (see figure 3).

Plane X is perpendicular to Plane Z and passes through the centres of the Datum holes A and B.

Plane Y is perpendicular to Plane X and Plane Z and passes through the centre of Datum hole A.

Datum areas A, B and C lie in Plane Z.

8.2 Overall dimension (figures 5 and 6)

The length of the case shall be

$l_1 = 62{,}5 \text{ mm} \pm 0{,}3 \text{ mm}$

The width of the case shall be

$l_2 = 95{,}0 \text{ mm} \pm 0{,}2 \text{ mm}$

The distance from the top side of the case to Reference Plane Z shall be

$l_3 = 15{,}0 \text{ mm} \pm 0{,}2 \text{ mm}$

The distance from the rear side to Plane X shall be

$l_4 = 47{,}35 \text{ mm} \pm 0{,}15 \text{ mm}$

The distance from the right side to Plane Y shall be

$l_5 = 13{,}0 \text{ mm} \pm 0{,}1 \text{ mm}$

8.3 Holding areas

The holding areas shown shaded in figure 6 shall be the areas along which the cartridge shall be held down when inserted into the drive. The distance of the holding areas from Plane X shall be

$l_6 = 12{,}0 \text{ mm max.}$

The width when measured from the edges of the case shall be

$l_7 = 3{,}0 \text{ mm min.}$

© ISO/IEC 2003 – All rights reserved

Copyright International Organization for Standardization
Provided by IHS under license with ISO
No reproduction or networking permitted without license from IHS
Not for Resale

8.4 Cartridge insertion

The cartridge shall have asymmetrical features to prevent insertion into the drive in other than the correct orientation. These consist of a channel, a recess and an incline.

The channel (figures 4 and 14) shall provide for an unobstructed path, when the lid is closed and locked, to unlock the lid. The distance of the channel from Plane Y shall be

l_8 = 79,6 mm ± 0,2 mm

There shall be a chamfer at the beginning of the channel defined by

l_9 = 1,0 mm ± 0,1 mm
l_{16} = 1,5 mm ± 0,1 mm

An additional chamfer further into the channel shall be defined by

l_{10} = 0,7 mm ± 0,1 mm
l_{17} = 1,9 mm ± 0,1 mm
l_{18} = 3,65 mm ± 0,10 mm

The innermost width of the channel shall be

l_{11} = 1,0 mm min.

There shall be a chamfer on the lid defined by

l_{12} = 1,2 mm ± 0,1 mm
l_{13} = 0,8 mm ± 0,1 mm
l_{14} = 1,2 mm ± 0,1 mm
l_{15} = 0,5 mm ± 0,1 mm

The distance from the left side of the case to the release pin shall be

l_{19} = 0,2 mm ± 0,2 mm

The height of the insertion area shall be

l_{20} = 2,3 mm min.

$l_{21} = 2{,}5\ \text{mm}\ {}^{+\ 0{,}2\ \text{mm}}_{-\ 0{,}0\ \text{mm}}$

The recess is located on the right side of the cartridge. The position and dimensions (figures 7 and 10) shall be defined by

l_{22} = 7,5 mm max.
l_{23} = 11,0 mm ± 0,2 mm
l_{24} = 1,5 mm ± 0,1 mm

The depth of the recess shall be

l_{25} = 1,5 mm ± 0,1 mm

The incline (figure 13) is part of the lid structure. The distance of the incline from Plane X shall be

$l_{26} = 7{,}7\ \text{mm}\ {}^{+\ 0{,}0\ \text{mm}}_{-\ 2{,}5\ \text{mm}}$

The angle of the incline shall be

$a_1 = 17{,}5° \pm 4{,}0°$

The incline shall end at its intersection with radius r_3 (see 8.13).

8.5 Window (figure 1)

A window may be provided on the top side so that parts of the reels are visible. The window, if provided, shall not extend beyond the height of the cartridge.

© ISO/IEC 2003 – All rights reserved
Copyright International Organization for Standardization
Provided by IHS under license with ISO
No reproduction or networking permitted without license from IHS
Not for Resale

8.6 Loading grips (figures 5 and 7)

The cartridge shall have a recessed loading grip on the right and on the left side to allow handling by an automatic loading mechanism.

The distance from Plane X to the centreline of the loading grip shall be

l_{28} = 39,35 mm ± 0,20 mm

The distance of the side edges of the loading grips from Plane Z and from the top side, respectively, shall be

l_{29} = 1,5 mm ± 0,1 mm

The width of the indent shall be

l_{30} = 5,0 mm ± 0,3 mm

The depth of the indent shall be

l_{31} = 2,0 mm ± 0,2 mm

The angle of the indent shall be

a_2 = 90° ± 5°

8.7 Label areas (figures 6 and 8)

A portion of the rear side of the cartridge and a portion of the top side of the cartridge may be used for labels. The portion and the size of the labels shall not interfere with the operation or clearance requirements of the cartridge component parts.

The area used for labels on the top side shall not extend beyond the inner edge of the holding areas defined by l_6 and l_7.

The position and dimensions of the label area on the rear side shall be defined by

l_{32} = 0,5 mm min.
l_{33} = 1,5 mm min.
l_{34} = 65,0 mm max.
$l_{171} \geq l_{164}$

The label areas shall not be recessed by more than 0,3 mm.

8.8 Datum areas and Datum holes

The annular Datum areas A, B and C shall lie in Plane Z (see figures 9, 10 and 11). They determine the vertical position of the cartridge in the drive. Each shall have a diameter d_1 = 6,0 mm ± 0,1 mm and be concentric with the respective Datum hole.

The centres of Datum holes A and B shall lie in Plane X.

The centre of the circular Datum hole A shall be at the intersection of Planes X and Y (see figure 10).

The distance from the centre of Datum hole B to Plane Y (see figure 9) shall be

l_{35} = 68,0 mm ± 0,1 mm

The distance from the centre of the circular Datum hole C to Plane Y (see figure 11) shall be

l_{36} = 10,20 mm ± 0,05 mm

The distance from the centre of Datum hole D to that of Datum hole C (see figure 9) shall be

l_{37} = 89,4 mm ± 0,1 mm

The distance from the centres of Datum holes C and D to Plane X (see figure 10) shall be

l_{38} = 36,35 mm ± 0,08 mm

The thickness of the case wall in the Datum areas shall be

l_{39} = 1,2 mm ± 0,1 mm

The diameter at the bottom of Datum hole A and Datum hole C shall be

l_{40} = 2,6 mm min.

--`,,,`-`-`,,`,,`,`,,`---

© ISO/IEC 2003 – All rights reserved

Copyright International Organization for Standardization
Provided by IHS under license with ISO
No reproduction or networking permitted without license from IHS Not for Resale

The depth of the holes shall be

l_{42} = 4,0 mm min.

The upper diameter of Datum holes A and C shall be

$l_{44} = 3{,}00\ \text{mm}^{+\ 0{,}05\ \text{mm}}_{-\ 0{,}00\ \text{mm}}$

This diameter shall be maintained to a depth of

l_{41} = 1,5 mm min.

The holes shall be tapered from this depth to the bottom of diameter l_{40}.

There shall be a chamfer around the outside of Datum hole A and Datum hole C defined by

l_{43} = 0,3 mm max.

$a_3 = 45° \pm 1°$

The width at the bottom of Datum holes B and D shall be l_{40}.

The depth of these holes shall be l_{42}.

The dimensions at the top of these holes shall be

l_{45} = 3,5 mm ± 0,1 mm

$l_{46} = 3{,}00\ \text{mm}^{+\ 0{,}05\ \text{mm}}_{-\ 0{,}00\ \text{mm}}$

r_1 = 1,7 mm min.

This width shall be maintained to a depth l_{41}.

There shall be a chamfer around the outside of Datum holes B and D defined by l_{43} and a_3.

8.9 Support areas (figure 9)

The cartridge Support areas are shown shaded in figure 9. Support areas A, B and C shall be coplanar with Datum areas A, B and C, respectively, within 0,1 mm. Support area D shall be coplanar with Datum Plane Z within 0,15 mm.

The areas within l_{49} of the edge of the cartridge shall be recessed from the Support areas.

l_{49} = 0,5 mm ± 0,1 mm

The position and dimensions of Support areas A and B shall be defined by

l_{47} = 10,0 mm ± 0,1 mm (twice)
l_{48} = 11,0 mm ± 0,1 mm
l_{50} = 7,0 mm ± 0,1 mm

The distance of Support areas C and D from Plane X shall be

l_{51} = 30,0 mm ± 0,1 mm

The dimensions of Support areas C and D shall be defined by l_{47} and

l_{52} = 5,5 mm ± 0,1 mm
l_{53} = 64,5 mm ± 0,2 mm

8.10 Recognition holes (figures 10, 11 and 12)

There shall be two Recognition holes numbered 1 and 2 as shown in figure 11.

The position of the centre of Recognition hole 1 shall be defined by

l_{55} = 39,65 mm ± 0,15 mm
l_{56} = 2,5 mm ± 0,1 mm

--`,,,`-`-`,,`,,`,`,,`---
© ISO/IEC 2003 – All rights reserved
Copyright International Organization for Standardization
Provided by IHS under license with ISO
No reproduction or networking permitted without license from IHS
Not for Resale

Recognition hole 1 shall be circular, its diameter shall be 3,0 mm ± 0,1 mm. Recognition hole 2 shall have a square form. Its position and dimensions shall be defined by

l_{58} = 74,3 mm ± 0,1 mm
l_{142} = 77,3 mm ± 0,1 mm
l_{143} = 41,15 mm ± 0,10 mm
l_{144} = 44,45 mm ± 0,10 mm

The depth of a closed Recognition hole below Plane Z (section E-E in figure 12) shall be

$$l_{59} = 1{,}2 \text{ mm} \begin{matrix} +\,0{,}3 \text{ mm} \\ -\,0{,}1 \text{ mm} \end{matrix}$$

The depth below Plane Z of an open Recognition hole shall be

l_{60} = 5,0 mm min.

Section E-E shows a Recognition hole closed by a plug. This plug shall withstand an applied force of 0,5 N without being punched out.

This International Standard prescribes the following states of these holes.

– Recognition hole 1 shall be closed
– Recognition hole 2 shall be open

8.11 Write-inhibit hole (figure 11 and 12)

The Write-inhibit hole shall have a square form. Its position and dimensions shall be

$$l_{172} = 5{,}40 \text{ mm} \begin{matrix} +\,0{,}05 \text{ mm} \\ -\,0{,}10 \text{ mm} \end{matrix}$$

l_{173} = 9,1 mm ± 0,1 mm

l_{174} = 1,4 mm ± 0,1 mm

l_{175} = 8,2 mm ± 0,1 mm

$$r_9 = 1{,}60 \text{ mm} \begin{matrix} +0{,}15 \text{ mm} \\ -0{,}10 \text{ mm} \end{matrix}$$

The position of the Write-inhibit hole below Plane Z shall be

l_{180} = 3,0 mm min.

Recording is enabled or inhibited depending on the position of the Movable Element of the Write-inhibit hole below Plane Z.

Recording is enabled when this position is

$$l_{181} = 0{,}00 \text{ mm} \begin{matrix} +\,0{,}00 \text{ mm} \\ -0{,}25 \text{ mm} \end{matrix}$$

Recording is inhibited when this position is

l_{182} = 3,0 mm min.

The position and dimensions of this Movable Element shall be

$$l_{176} = 5{,}45 \text{ mm} \begin{matrix} +0{,}10 \text{ mm} \\ -0{,}15 \text{ mm} \end{matrix}$$

l_{177} = 9,05 mm ± 0,15 mm

l_{178} = 1,57 mm ± 0,15 mm

© ISO/IEC 2003 – All rights reserved

Copyright International Organization for Standardization
Provided by IHS under license with ISO
No reproduction or networking permitted without license from IHS
Not for Resale

$$l_{179} = 5{,}23 \text{ mm}^{+0{,}10 \text{ mm}}_{-0{,}15 \text{ mm}}$$

This Movable Element shall be such that the state of the Write-inhibit hole shall be visible (see figure 8 as an example). It shall be constructed so as to withstand a force of 0,5 N. The force required to move it shall be between 1 N and 29 N.

8.12 Pre-positioning surfaces (figures 4 and 10)

These surfaces determine the position of the cartridge when it is inserted into the loading slot of the drive.

The distance of the surface on which the Tape Reference Edge rests from Plane Z (figure 4) shall be

$$l_{62} = 2{,}4 \text{ mm}^{+ 0{,}0 \text{ mm}}_{- 0{,}1 \text{ mm}}$$

The position of the cartridge relative to Plane Y shall be controlled by the pre-positioning surfaces defined by

$l_{63} = 1{,}0 \text{ mm} \pm 0{,}1 \text{ mm}$
$l_{64} = 69{,}0 \text{ mm} \pm 0{,}2 \text{ mm}$

The position of the cartridge relative to Plane X shall be controlled by the pre-positioning surfaces defined by

$l_{65} = 14{,}65 \text{ mm} \pm 0{,}10 \text{ mm}$

The angle of the chamfer at the edge of this surface shall be defined by

$a_4 = 45° \pm 1°$

8.13 Cartridge lid (figures 6, 13 and 15)

The cartridge shall have a lid for protection of the tape during handling, storage and transportation. The lid consists of two parts, the main part and an auxiliary part.

The main part rotates around an axis A (see figure 13) the position of which is fixed relative to the case. Its location shall be defined by

$l_{27} = 0{,}55 \text{ mm} \pm 0{,}10 \text{ mm}$
$l_{67} = 7{,}5 \text{ mm} \pm 0{,}1 \text{ mm}$

The auxiliary part rotates around axis B the position of which is fixed relative to the main part of the lid and moves with it. When the lid is in the closed position, the location of axis B shall be defined by

$l_{68} = 7{,}0 \text{ mm} \pm 0{,}1 \text{ mm}$
$l_{69} = 10{,}1 \text{ mm} \pm 0{,}1 \text{ mm}$

The rotation of the auxiliary part is controlled by a cam at each end so that it follows the path indicated in figure 13.

In the open position, the front edge of the auxiliary part shall be at a height

$l_{70} = 14{,}8 \text{ mm min.}$

above Plane Z.

The case shall allow for proper clearance of the lid and auxiliary part defined by

$$l_{71} = 11{,}5 \text{ mm}^{+ 0{,}2 \text{ mm}}_{- 0{,}0 \text{ mm}}$$

$l_{72} = 1{,}2 \text{ mm} \pm 0{,}1 \text{ mm}$

When the lid is completely open, neither part shall extend beyond a plane parallel to Plane Z located above it at a height

$l_{73} = 22{,}3 \text{ mm max.}$

When the lid is in its completely open position, its front edge shall have been rotated by an angle defined by

$$a_5 = 85°^{+ 1°}_{- 2°}$$

© ISO/IEC 2003 – All rights reserved
Copyright International Organization for Standardization
Provided by IHS under license with ISO
No reproduction or networking permitted without license from IHS
Not for Resale

When the lid is in partially open position, neither part shall extend beyond a plane parallel to Plane Z located above it at a height

l_{74} = 22,5 mm max.

The path of the top of the lid as it opens shall be defined by

r_2 = 14,9 mm max.

The start point of the incline on the case that meets the lid (figure 6) shall be defined by

l_{75} = 8,4 mm max.

In the closed position of the lid, its height over Plane Z (figure 13) shall be

$$l_{76} = 15{,}2 \text{ mm} \begin{matrix} + 0{,}0 \text{ mm} \\ - 0{,}5 \text{ mm} \end{matrix}$$

and its distance from Plane X shall be

$$l_{77} = 15{,}3 \text{ mm} \begin{matrix} + 0{,}0 \text{ mm} \\ - 0{,}3 \text{ mm} \end{matrix}$$

In the closed position of the lid, its inside shall provide a clearance for the tape defined by

l_{78} = 13,15 mm ± 0,10 mm

The top front of the lid shall be convex. The centre of the corresponding radius shall be on axis A. This radius shall be

r_3 = 14,7 mm max.

The design of the locking mechanism is not specified by this International Standard except that it shall be operated by a release pin located in the drive. In the closed and locked position of the lid, access to the lid lock release shall be unobstructed in the shaded area (see figure 15) defined by

l_{79} = 2,0 mm ± 0,1 mm
l_{145} = 6,3 mm ± 0,2 mm
l_{146} = 1,2 mm ± 0,1 mm
a_{15} = 45° ± 1°
a_{16} = 15° ± 1°

The release mechanism of the lid shall be actuated when the drive release pin is in the other shaded area of figure 15 defined by l_{79} and

l_{80} = 8,2 mm ± 0,2 mm
l_{81} = 0,7 mm ± 0,2 mm
a_6 = 15° ± 1°

The force required to unlock the lid lock shall not exceed 0,25 N in the direction shown in figure 18.

The force required to open the lid shall not exceed 1,0 N in the direction shown in figure 19.

8.14 Cartridge reel lock (figures 10 and 16)

The reels shall be locked when the cartridge is removed from the tape drive. The design of the locking mechanism is not specified by this International Standard except that it shall meet the requirements specified below so as being able to be operated by a release pin of the drive.

The release mechanism shall be accessed through a rectangular hole of the case (figure 10) which shall be defined as follows.

– its centreline shall be parallel to Plane Y at a distance

l_{82} = 34,5 mm ± 0,1 mm

– its top edge shall be parallel to Plane X at a distance

l_{83} = 35,85 mm ± 0,15 mm

– its width shall be

© ISO/IEC 2003 – All rights reserved

Copyright International Organization for Standardization
Provided by IHS under license with ISO
No reproduction or networking permitted without license from IHS
Not for Resale

l_{84} = 4,0 mm ± 0,1 mm

– its height shall be

l_{85} = 6,5 mm min.

The dimension of the release mechanism shall be defined by

$l_{86} = 3{,}2\ \text{mm}^{+0{,}3\ \text{mm}}_{-0{,}2\ \text{mm}}$

l_{87} = 4,0 mm ± 0,1 mm

a_7 = 60,0° ± 1,0°

The reels shall be locked when the operating face of the release pin is located at a distance from Plane X defined by

$l_{88} = 39{,}0\ \text{mm}^{+2{,}0\ \text{mm}}_{-0{,}0\ \text{mm}}$

The reels shall be unlocked when the operating face of the release pin is located at a distance from Plane X defined by

$l_{89} = 41{,}75\ \text{mm}^{+0{,}50\ \text{mm}}_{-0{,}00\ \text{mm}}$

In this position there shall be a clearance between the locking mechanism and the inside of the rear wall of the cartridge defined by

l_{90} = 0,5 mm min.

The pin used to move the locking mechanism shall penetrate into the cartridge over a distance of

l_{91} = 7,8 mm max.

and the bottom edge of the slanted part of the pin shall penetrate over a distance of l_{86} min.

The rectangular cavity of the locking mechanism shall be defined by

l_{92} = 4,0 mm ± 0,1 mm
r_4 = 0,3 mm max.

The force required to unlock the reel lock in the direction shown in figure 17 shall not exceed 1,0 N.

8.15 Reel access holes (figure 10)

The case shall have two circular reel access holes which shall allow penetration of the drive spindles.

The positions of the access holes shall be defined by

l_{93} = 23,00 mm ± 0,05 mm
l_{94} = 11,40 mm ± 0,05 mm
l_{95} = 46,2 mm ± 0,1 mm

The diameter of the holes shall be

d_2 = 18,80 mm ± 0,05 mm

8.16 Interface between the reels and the drive spindles

The drive spindles (see figures 22 and 23) shall engage the reels in the area defined by

l_{102} = 5,4 mm ± 0,1 mm
l_{103} = 4,4 mm ± 0,1 mm
l_{104} = 0,6 mm max.

$d_4 = 10{,}00\ \text{mm}^{+0{,}08\ \text{mm}}_{-0{,}00\ \text{mm}}$

d_5 = 16,0 mm max.

© ISO/IEC 2003 – All rights reserved
Copyright International Organization for Standardization
Provided by IHS under license with ISO
No reproduction or networking permitted without license from IHS
Not for Resale

$$d_6 = 18{,}0\ \text{mm}\ {}^{+\ 0{,}0\ \text{mm}}_{-\ 0{,}1\ \text{mm}}$$

$$d_7 = 16{,}0\ \text{mm}\ {}^{+\ 0{,}0\ \text{mm}}_{-\ 0{,}1\ \text{mm}}$$

The reel engagement hole shall have a chamfer defined by

$l_{105} = 2{,}4\ \text{mm} \pm 0{,}1\ \text{mm}$
$a_9 = 15° \pm 1°$

The bottom of the reel on the outside edge shall have a chamfer defined by

$l_{106} = 0{,}2\ \text{mm max.}$
$a_8 = 45° \pm 1°$

The position and width of the slots with which the drive spindle will engage shall be defined by

$$l_{107} = 2{,}4\ \text{mm}\ {}^{+\ 0{,}2\ \text{mm}}_{-\ 0{,}0\ \text{mm}}$$

$a_{10} = 60\ ° \pm 1°$

The teeth in the reel engagement hole shall have a radius

$r_5 = 0{,}2\ \text{mm max.}$

The depth of the reel driving hole within diameter d_3 shall be

$l_{108} = 9{,}4\ \text{mm min.}$

$$d_3 = 6{,}50\ \text{mm}\ {}^{+\ 0{,}08\ \text{mm}}_{-\ 0{,}00\ \text{mm}}$$

When the cartridge is within the drive, the tape centre line shall be in a plane parallel to Plane Z at a distance

$l_{109} = 7{,}05\ \text{mm} \pm 0{,}10\ \text{mm}$

and the Support areas of the reels shall be at a distance from Plane Z defined by

$l_{110} = 0{,}6\ \text{mm} \pm 0{,}2\ \text{mm}$

The penetration of the reel drive spindle into the reel shall be defined by

$l_{111} = 7{,}5\ \text{mm max.}$
$l_{112} = 8{,}0\ \text{mm max.}$
$a_{11} = 60° \pm 1°$

When the cartridge is mounted within the drive, so that the Support areas are at a distance l_{110} from Plane Z, a force F = 0,6 N ± 0,2 N shall be exerted on the cartridge in the direction shown in figure 23.

8.17 Light path (figures 10, 12, 20 and 21)

A light path shall be provided for sensing the leader and trailer tapes. When the lid is open, an unobstructed light path shall exist from the d_{10} diameter light path hole to the outside of the cartridge via square windows in the light path hole (see cross-section D-D in figure 12) and the light window in the cartridge lid.

The centre of the light path hole shall be defined by l_{82} and

$l_{115} = 8{,}35\ \text{mm} \pm 0{,}10\ \text{mm}$

The diameter of the light path hole shall be

$$d_{10} = 6{,}5\ \text{mm}\ {}^{+\ 0{,}3\ \text{mm}}_{-\ 0{,}0\ \text{mm}}$$

The light path hole shall have a chamfer defined by

$l_{116} = 0{,}5\ \text{mm max.}$

© ISO/IEC 2003 – All rights reserved

Copyright International Organization for Standardization
Provided by IHS under license with ISO
No reproduction or networking permitted without license from IHS
Not for Resale

$a_{12} = 45° \pm 1°$

The position and size of the square window on each side of the light path hole shall be defined by

$l_{117} = 6{,}05 \text{ mm} \pm 0{,}10 \text{ mm}$

$l_{118} = 2{,}5 \text{ mm}^{+ 0{,}4 \text{ mm}}_{- 0{,}0 \text{ mm}}$

where l_{118} is the length of the side of the square window.

The hole shall be deep enough to allow penetration of a light emitter over a distance of

$l_{119} = 12{,}5 \text{ mm min.}$

The angle of the light path shall be

$a_{13} = 5{,}50° \pm 0{,}25°$

The position and size of the cartridge lid window shall be

$l_{120} = 3{,}8 \text{ mm} \pm 0{,}1 \text{ mm}$

$l_{121} = 2{,}5 \text{ mm}^{+ 0{,}4 \text{ mm}}_{- 0{,}0 \text{ mm}}$

$l_{122} = 6{,}05 \text{ mm} \pm 0{,}10 \text{ mm}$

8.18 Position of the tape in the case (figure 21)

The tape shall run between two guide surfaces in a plane parallel to Plane X and l_{123} from it.

$l_{123} = 13{,}15 \text{ mm} \pm 0{,}10 \text{ mm}$

The guide surfaces shall have a radius of r_6 and shall be tangential, as shown in figure 21, to lines tangential to the reel hubs that extend to points outside the case.

$r_6 = 3{,}0 \text{ mm} \pm 0{,}1 \text{ mm}$

These points shall be defined by

$l_{124} = 76{,}28 \text{ mm} \pm 0{,}30 \text{ mm}$
$l_{125} = 27{,}15 \text{ mm} \pm 0{,}20 \text{ mm}$
$l_{126} = 31{,}15 \text{ mm} \pm 0{,}20 \text{ mm}$
$l_{127} = 9{,}67 \text{ mm} \pm 0{,}10 \text{ mm}$

8.19 Tape path zone

When the cartridge is inserted into the drive, the tape is pulled outside the case by tape guides and is no longer in contact with the guide surfaces. The tape path zone (see figure 21) of the case is the zone in which the tape shall be able to move freely. This zone shall be maintained for both sides of the case and shall be defined by l_{124} to l_{127} and

$l_{128} = 23{,}0 \text{ mm} \pm 0{,}1 \text{ mm}$
$l_{130} = 46{,}2 \text{ mm} \pm 0{,}2 \text{ mm}$
$l_{131} = 11{,}4 \text{ mm} \pm 0{,}1 \text{ mm}$

The clearance between the tape and the guides shall be defined by

$l_{129} = 0{,}3 \text{ mm min.}$
$l_{132} = 0{,}3 \text{ mm min.}$

8.20 Tape access cavity (figure 10)

When the cartridge is inserted into the drive, tape guides in the drive pull the tape into the drive tape path. The two radii r_7 are centred on Datum holes A and B. The shape and dimensions of the access cavity for these tape guides shall be defined by l_{63} and l_{64}, and the following

$r_7 = 2{,}3 \text{ mm} \pm 0{,}1 \text{ mm}$

The two radii r_8 are centred on the centres of the reel access holes.

--`,,,`-`-`,,`,,`,`,,`---
© ISO/IEC 2003 – All rights reserved
Copyright International Organization for Standardization
Provided by IHS under license with ISO
No reproduction or networking permitted without license from IHS
Not for Resale

r_8 = 24,15 mm ± 0,10 mm
l_{133} = 3,85 mm ± 0,10 mm

8.21 Tape access cavity clearance (figure 24)

The case design shall provide clearance for drive tape threading mechanisms. This clearance shall be defined by

l_{134} = 1,2 mm max.

$l_{135} = 1{,}15\ \text{mm}\ ^{+\ 0{,}20\ \text{mm}}_{-\ 0{,}00\ \text{mm}}$

$l_{136} = 14{,}0\ \text{mm}\ ^{+\ 0{,}0\ \text{mm}}_{-\ 0{,}2\ \text{mm}}$

l_{137} = 66,8 mm min.
l_{138} = 10,0 mm min.
l_{139} = 66,8 mm min.
l_{140} = 1,2 mm max.
l_{141} = 14,8 mm min.
l_{159} = 13,0 mm min.
l_{170} = 4,0 mm max.
a_{14} = 49° max.

8.22 Requirements for the RMIC (figures 25 and 26)

The RMIC shall be a chip built into the case (see annex L). It can be accessed by the RF interface only.

For reasons of backward compatibility with AIT-1 and AIT-2 cartridges, the case shall have five Access Holes.

The positions and dimensions of these Access Holes are as follows.

Access Hole GND

$l_{165} = 67{,}2\ \text{mm}\ ^{+\ 0{,}0\ \text{mm}}_{-0{,}2\ \text{mm}}$ $l_{166} = 69{,}0\ \text{mm}\ ^{+\ 0{,}2\ \text{mm}}_{-\ 0{,}0\ \text{mm}}$

Access Hole SCL

$l_{167} = 70{,}0\ \text{mm}\ ^{+\ 0{,}0\ \text{mm}}_{-0{,}2\ \text{mm}}$ $l_{168} = 71{,}8\ \text{mm}\ ^{+\ 0{,}2\ \text{mm}}_{-\ 0{,}0\ \text{mm}}$

Access Hole ID

$l_{169} = 72{,}8\ \text{mm}\ ^{+\ 0{,}0\ \text{mm}}_{-\ 0{,}2\ \text{mm}}$ $l_{147} = 74{,}6\ \text{mm}\ ^{+\ 0{,}2\ \text{mm}}_{-\ 0{,}0\ \text{mm}}$

Access Hole SDA

$l_{148} = 75{,}6\ \text{mm}\ ^{+\ 0{,}0\ \text{mm}}_{-\ 0{,}2\ \text{mm}}$ $l_{149} = 77{,}4\ \text{mm}\ ^{+\ 0{,}2\ \text{mm}}_{-\ 0{,}0\ \text{mm}}$

Access Hole Vcc

$l_{150} = 78{,}4\ \text{mm}\ ^{+\ 0{,}0\ \text{mm}}_{-\ 0{,}2\ \text{mm}}$ $l_{151} = 80{,}2\ \text{mm}\ ^{+\ 0{,}2\ \text{mm}}_{-\ 0{,}0\ \text{mm}}$

The following dimensions shall apply to all Access Holes.

© ISO/IEC 2003 – All rights reserved

Copyright International Organization for Standardization
Provided by IHS under license with ISO
No reproduction or networking permitted without license from IHS
Not for Resale

$$l_{152} = 5{,}1\ \text{mm}\ {}^{+\ 0{,}2\ \text{mm}}_{-\ 0{,}0\ \text{mm}}$$

$$l_{153} = 1{,}4\ \text{mm}\ {}^{+\ 0{,}3\ \text{mm}}_{-\ 0{,}1\ \text{mm}}$$

There shall be a chamfer around the outside of these holes defined by

$l_{154} = 0{,}4\ \text{mm} \pm 0{,}1\ \text{mm}$

$a_{17} = 45° \pm 1°$

When the cartridge is inserted into the drive, the pin used to recognise the cartridge penetrates through Recognition hole 3. The cavity shown shaded in cross-section N-N in figure 26 is required for this pin. This cavity shall be defined by l_{143}, l_{144} and

$l_{157} = 5{,}0\ \text{mm min.}$

$l_{158} = 1{,}5\ \text{mm max.}$

$l_{160} = 45{,}4\ \text{mm min.}$

8.23 Recognition recesses (figures 8 and 10)

The cartridge shall have two recesses on the rear side. These recesses are used to recognise the cartridge in a library system. They shall be defined by

$$l_{161} = 8{,}4\ \text{mm}\ {}^{+\ 0{,}0\ \text{mm}}_{-\ 0{,}2\ \text{mm}}$$

$$l_{162} = 6{,}0\ \text{mm}\ {}^{+\ 0{,}2\ \text{mm}}_{-\ 0{,}0\ \text{mm}}$$

$$l_{163} = 2{,}0\ \text{mm}\ {}^{+\ 0{,}2\ \text{mm}}_{-\ 0{,}0\ \text{mm}}$$

$$l_{164} = 2{,}0\ \text{mm}\ {}^{+\ 0{,}2\ \text{mm}}_{-0{,}1\ \text{mm}}$$

© ISO/IEC 2003 – All rights reserved
Copyright International Organization for Standardization
Provided by IHS under license with ISO
No reproduction or networking permitted without license from IHS
Not for Resale

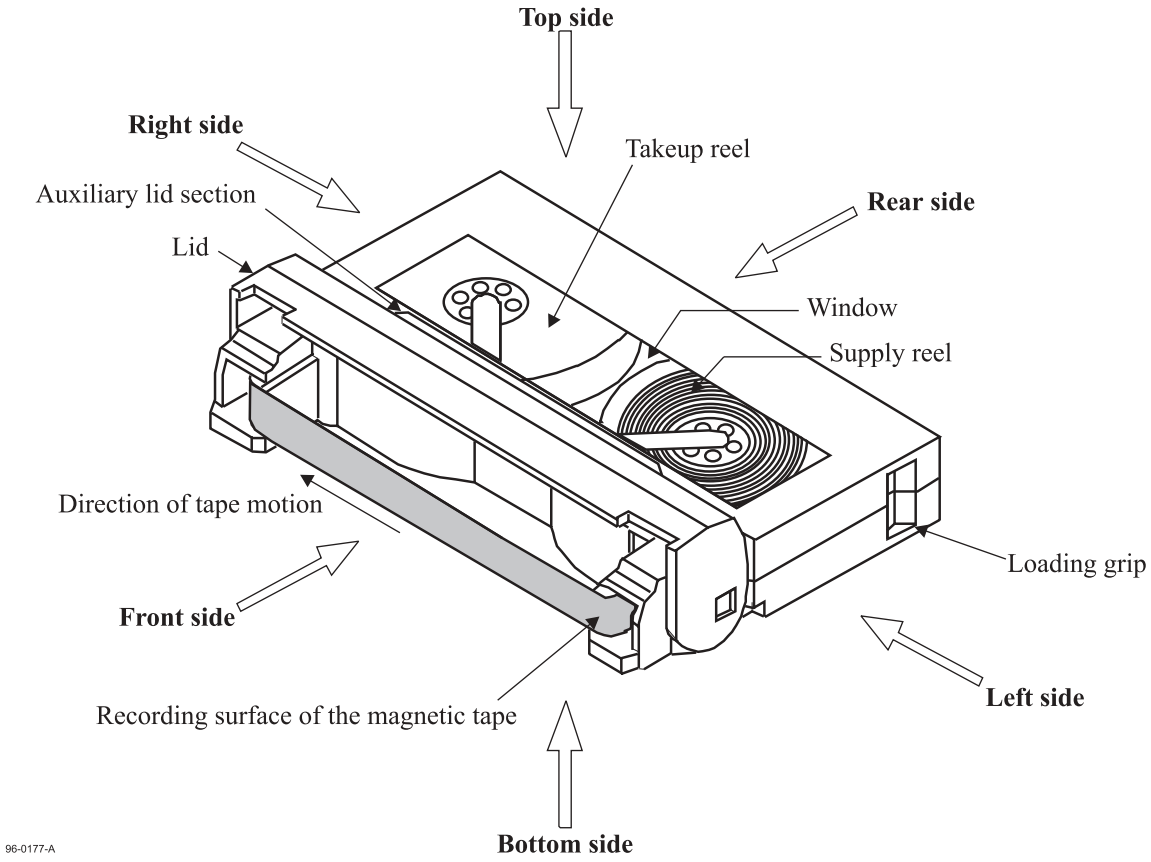

Figure 1 - Tape cartridge assembly, top view, lid open

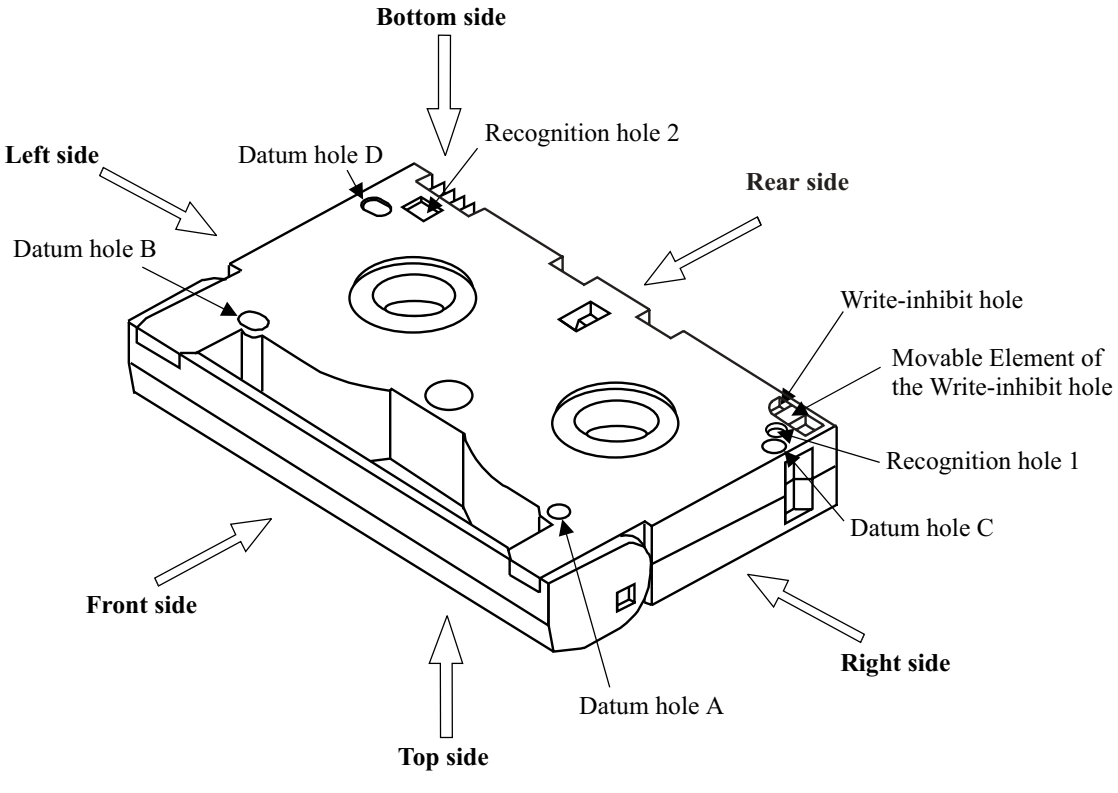

Figure 2 - Tape cartridge assembly, bottom view, lid closed

© ISO/IEC 2003 – All rights reserved

Copyright International Organization for Standardization
Provided by IHS under license with ISO
No reproduction or networking permitted without license from IHS
Not for Resale

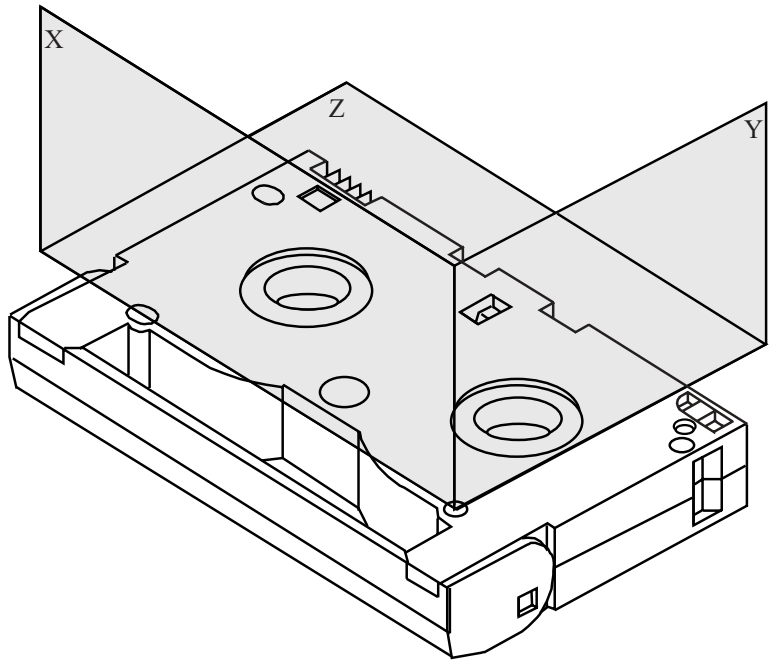

Figure 3 - Reference Planes X, Y, Z

© ISO/IEC 2003 – All rights reserved
Copyright International Organization for Standardization
Provided by IHS under license with ISO
No reproduction or networking permitted without license from IHS
Not for Resale

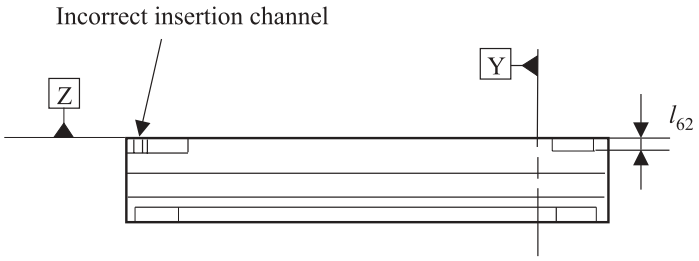

Figure 4 - Front side, lid closed

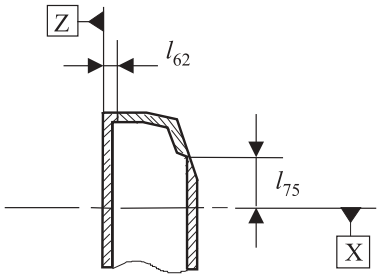

Section B-B

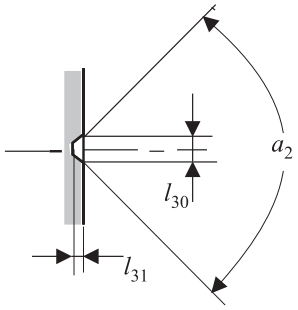

Section A-A

96-0180-A

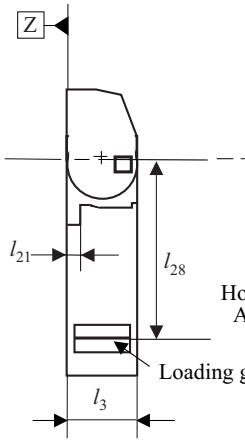

Figure 5 - Left side, lid closed

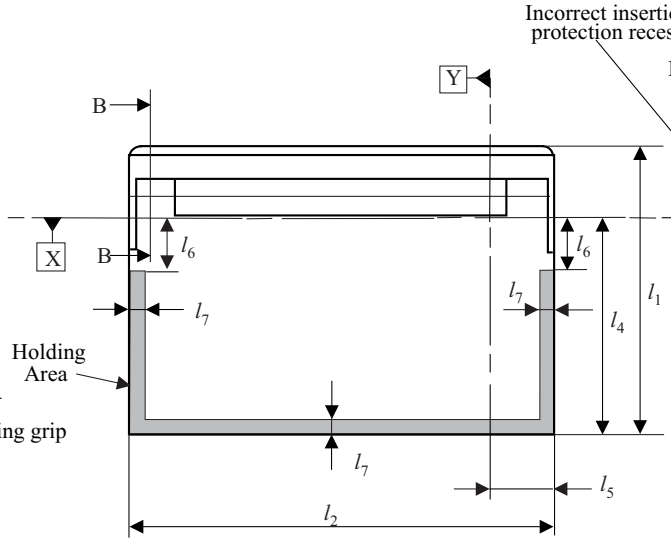

Figure 6 - Top side, lid closed

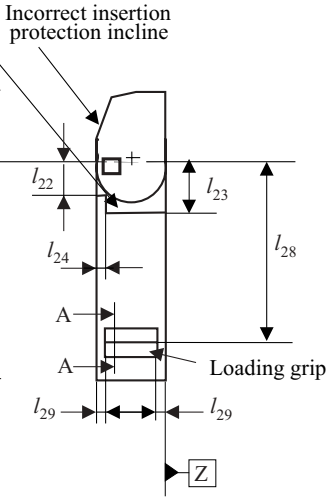

Figure 7 - Right side, lid closed

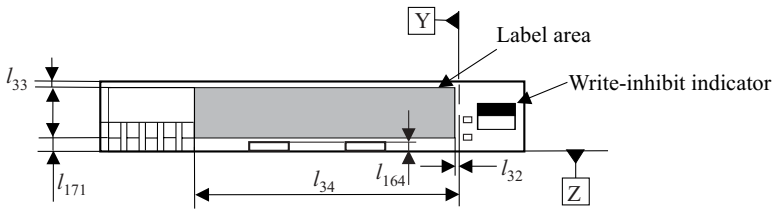

Figure 8 - Rear side, lid closed

99-0058-A

© ISO/IEC 2003 – All rights reserved
Copyright International Organization for Standardization
Provided by IHS under license with ISO
No reproduction or networking permitted without license from IHS
Not for Resale

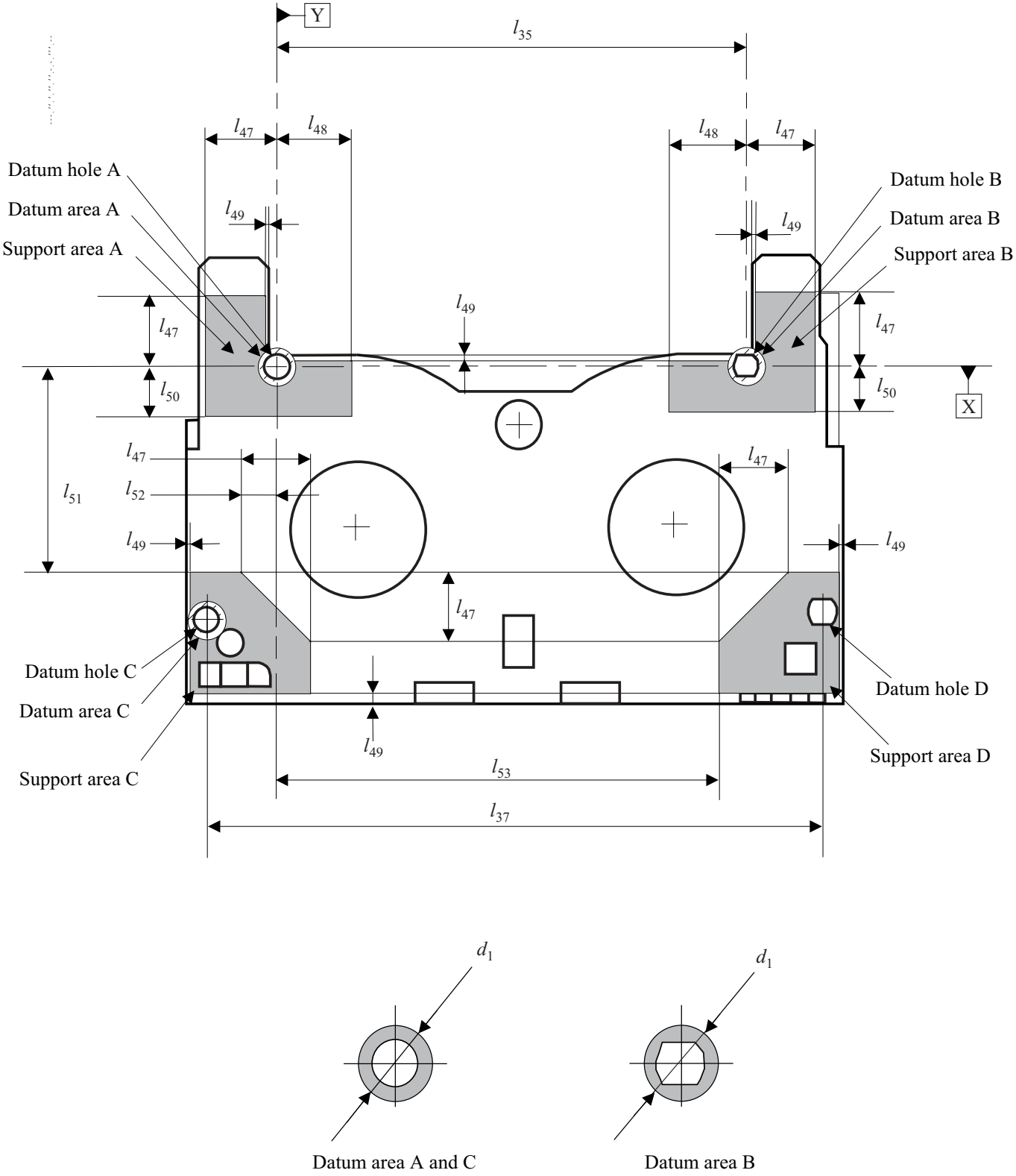

Figure 9 - Bottom side, Datum and Support areas

© ISO/IEC 2003 – All rights reserved
Copyright International Organization for Standardization
Provided by IHS under license with ISO
No reproduction or networking permitted without license from IHS
Not for Resale

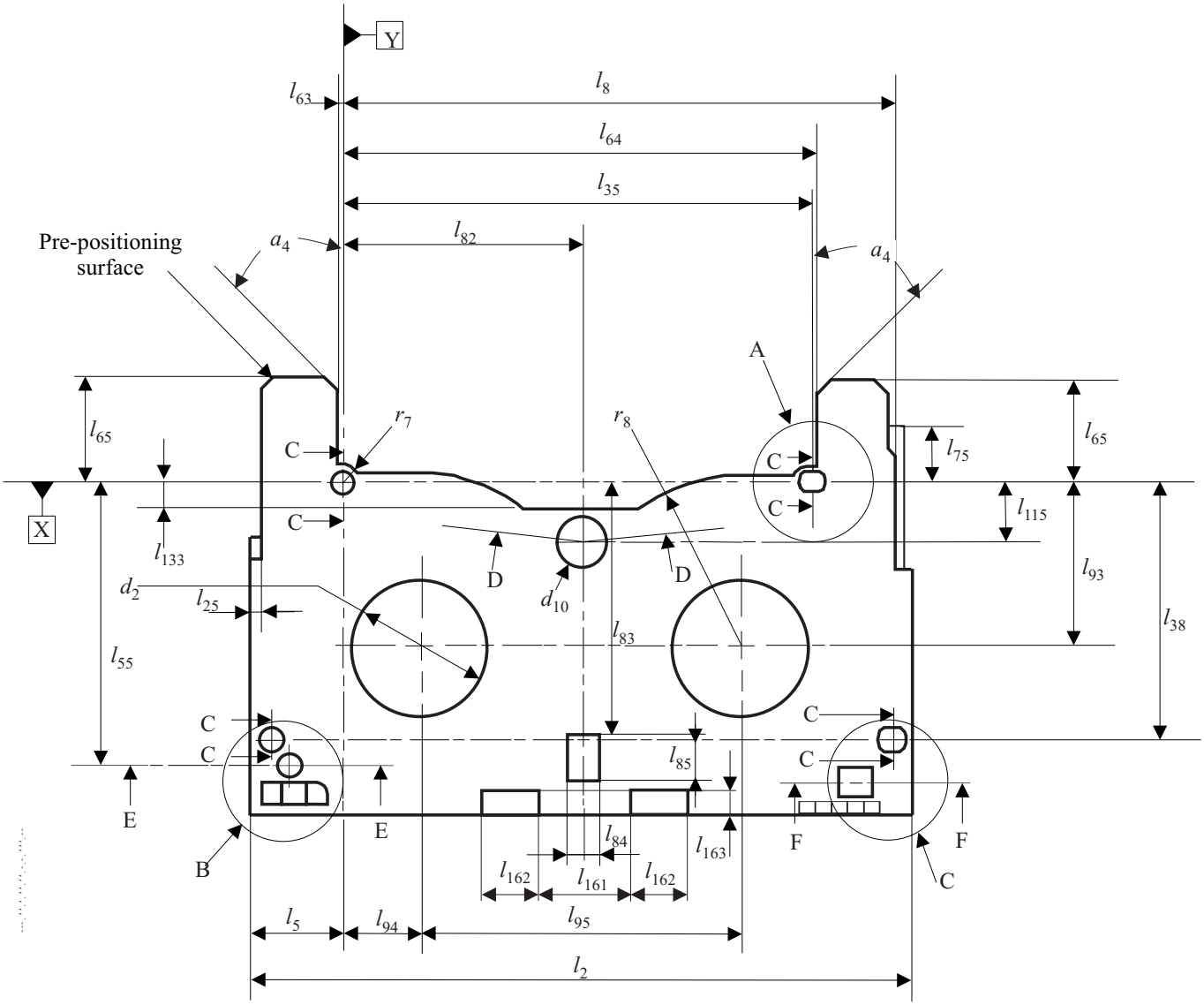

Figure 10 - Bottom side, lid removed

© ISO/IEC 2003 – All rights reserved
Copyright International Organization for Standardization
Provided by IHS under license with ISO
No reproduction or networking permitted without license from IHS
Not for Resale

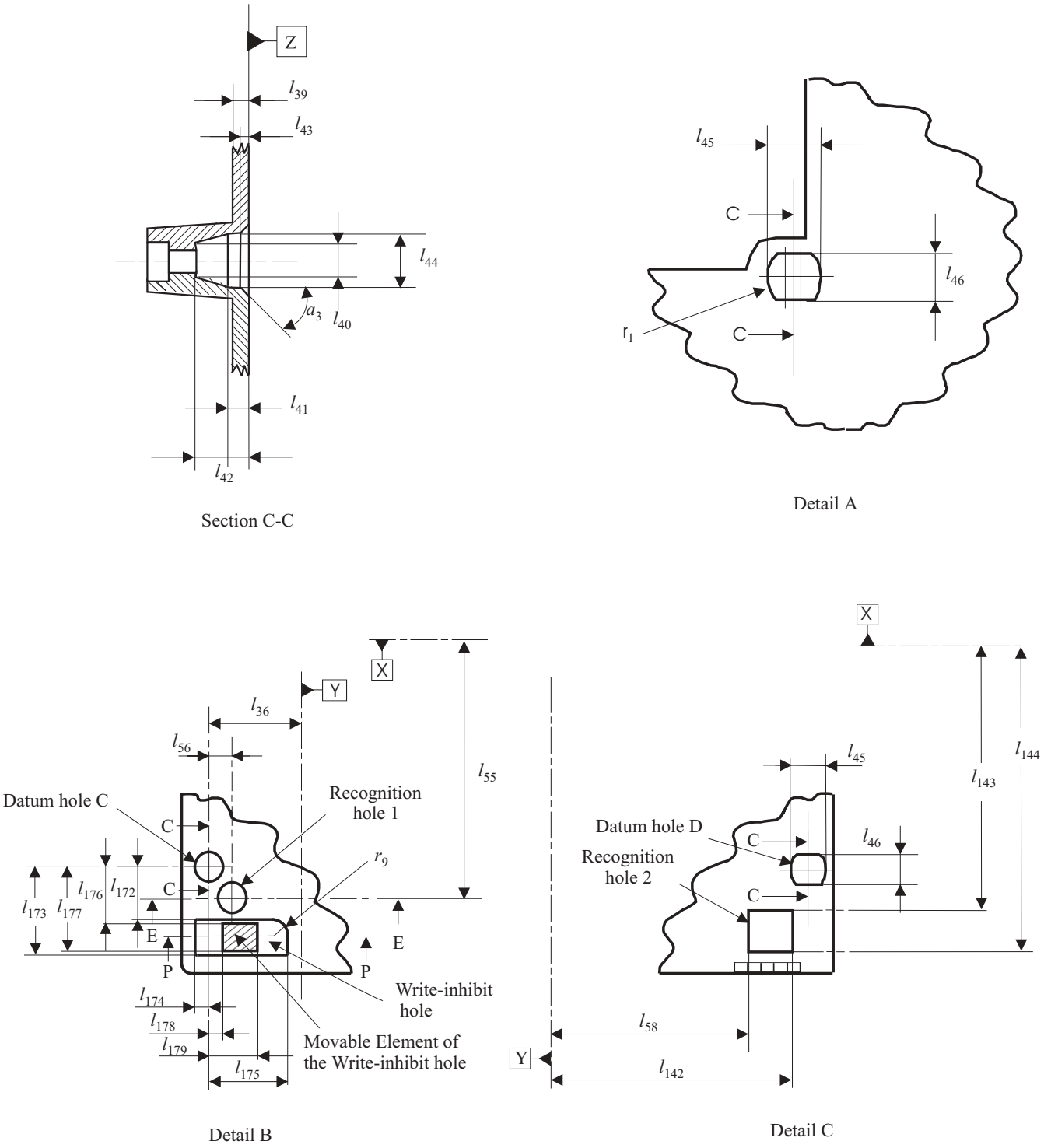

Figure 11 - Details of the Datum, Recognition and Write-inhibit holes

© ISO/IEC 2003 – All rights reserved
Copyright International Organization for Standardization
Provided by IHS under license with ISO
No reproduction or networking permitted without license from IHS
Not for Resale

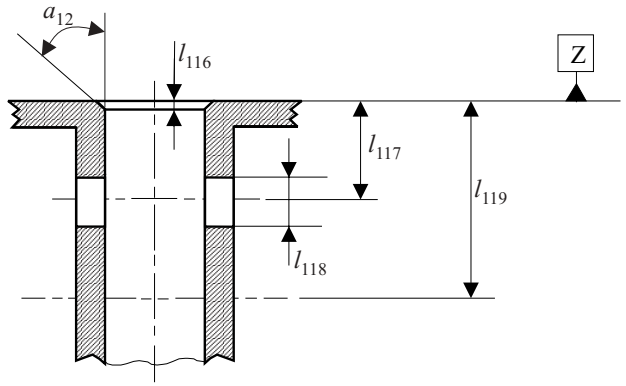

Section D-D

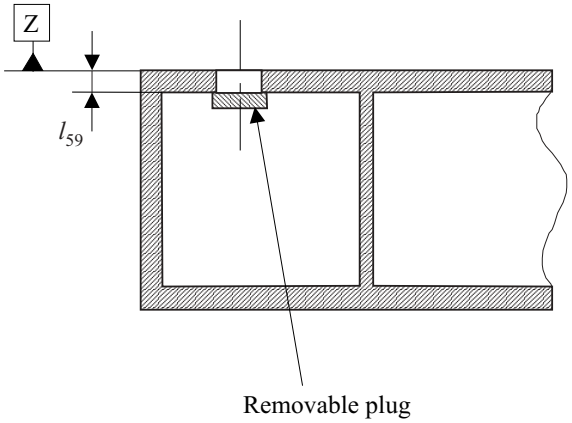

Section E-E

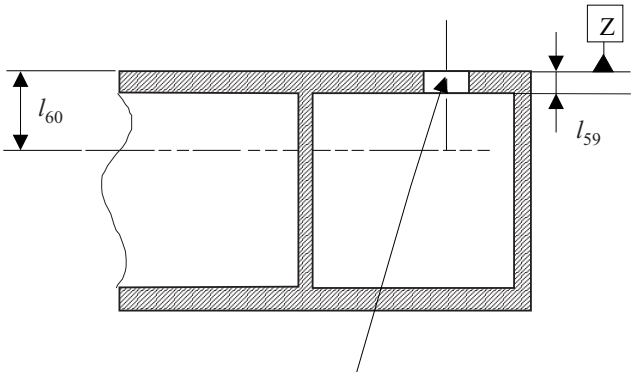

Section F-F

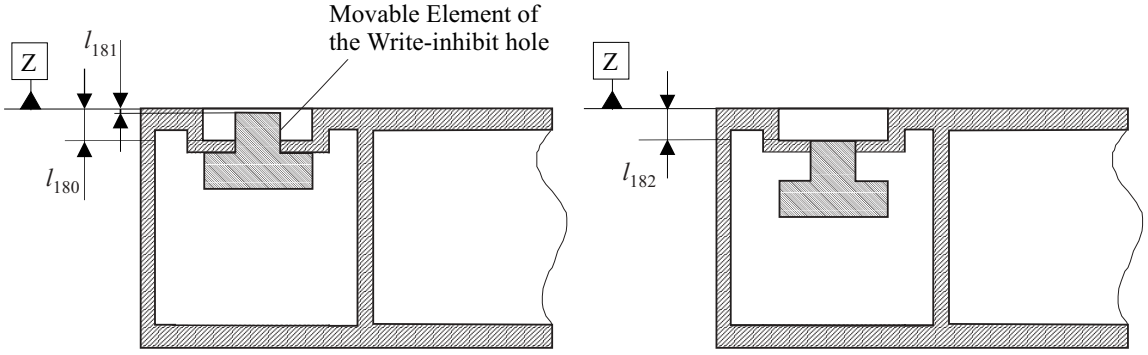

The position at which recording is enabled

The position at which recording is inhibited

Section P-P

99-0062-A

Figure 12 - Cross-sections showing the light path hole, the Recognition and Write-inhibit holes

© ISO/IEC 2003 – All rights reserved

Copyright International Organization for Standardization
Provided by IHS under license with ISO
No reproduction or networking permitted without license from IHS
Not for Resale

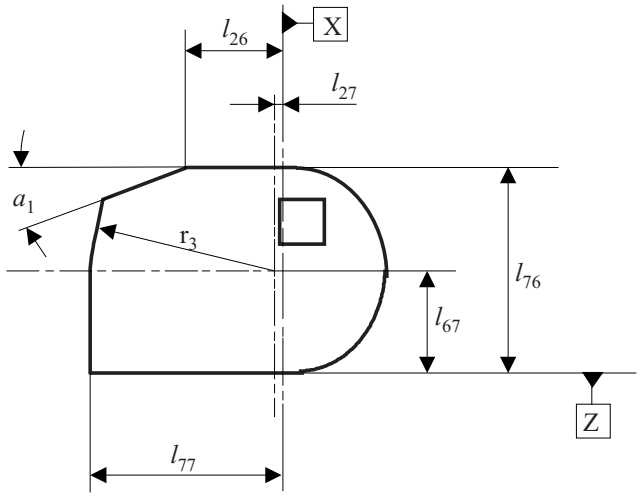

Details of the side of the lid

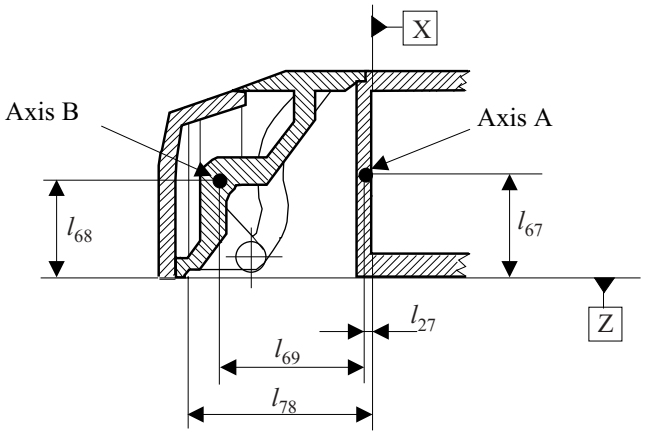

Internal structure of the lid

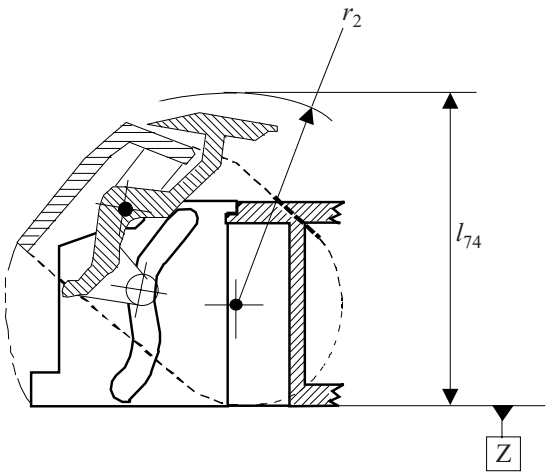

Lid configuration
when rotating

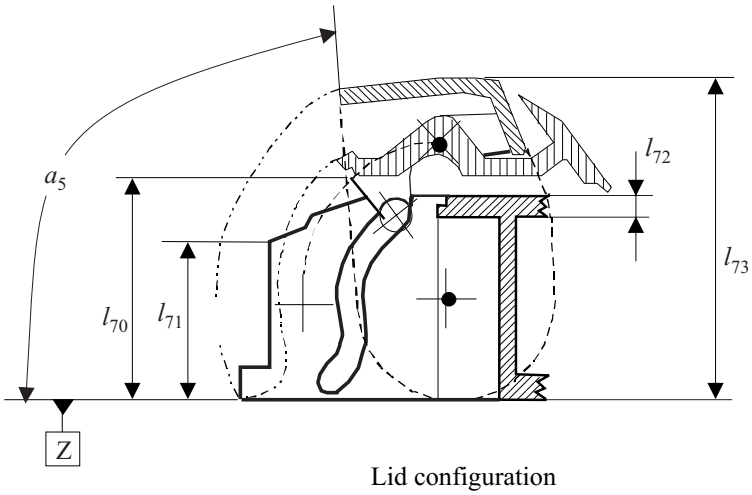

Lid configuration
when the lid is open

96-0186-A

Figure 13 - Lid

© ISO/IEC 2003 – All rights reserved
Copyright International Organization for Standardization
Provided by IHS under license with ISO
No reproduction or networking permitted without license from IHS
Not for Resale

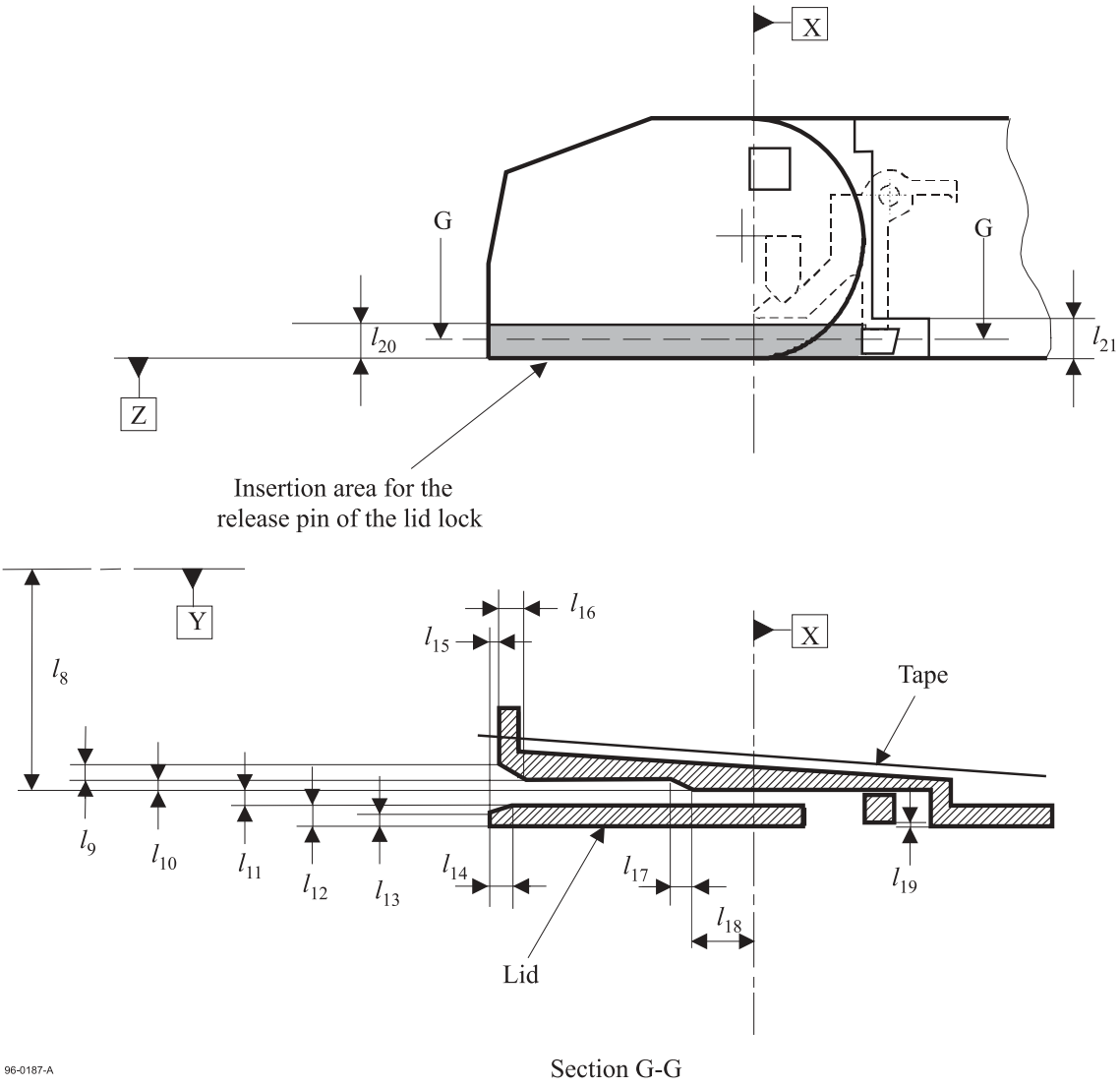

Figure 14 - Lid release insertion channel

© ISO/IEC 2003 – All rights reserved
Copyright International Organization for Standardization
Provided by IHS under license with ISO
No reproduction or networking permitted without license from IHS
Not for Resale

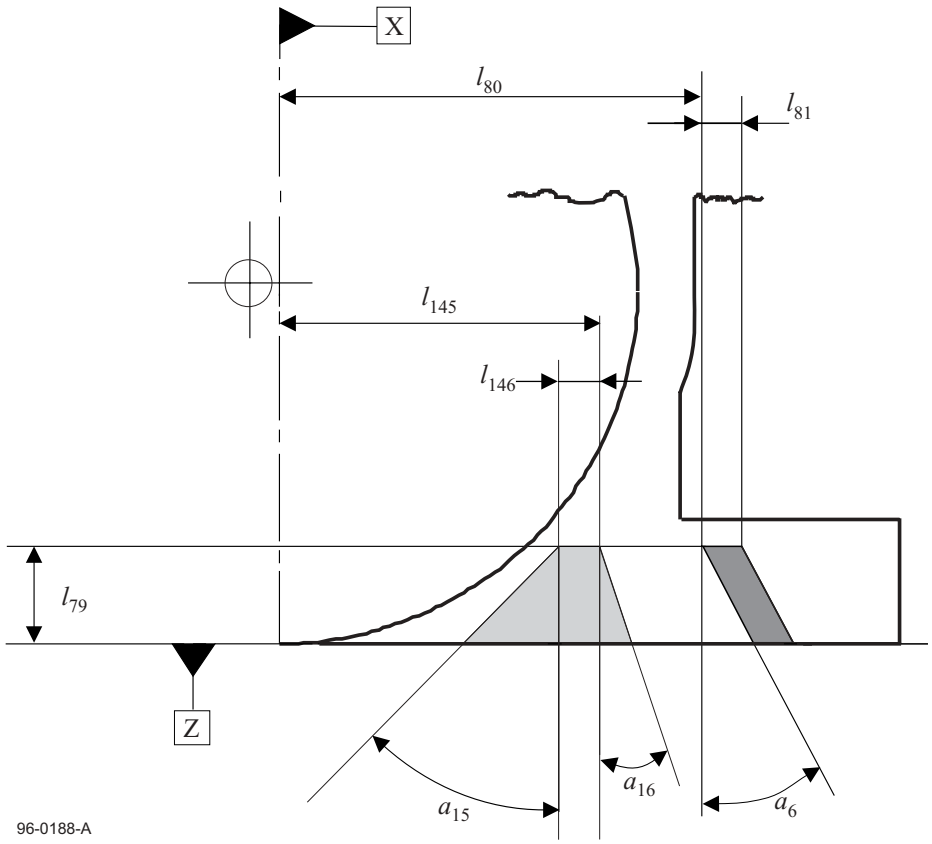

Figure 15 - Lid release requirements

© ISO/IEC 2003 – All rights reserved
Copyright International Organization for Standardization
Provided by IHS under license with ISO
No reproduction or networking permitted without license from IHS
Not for Resale

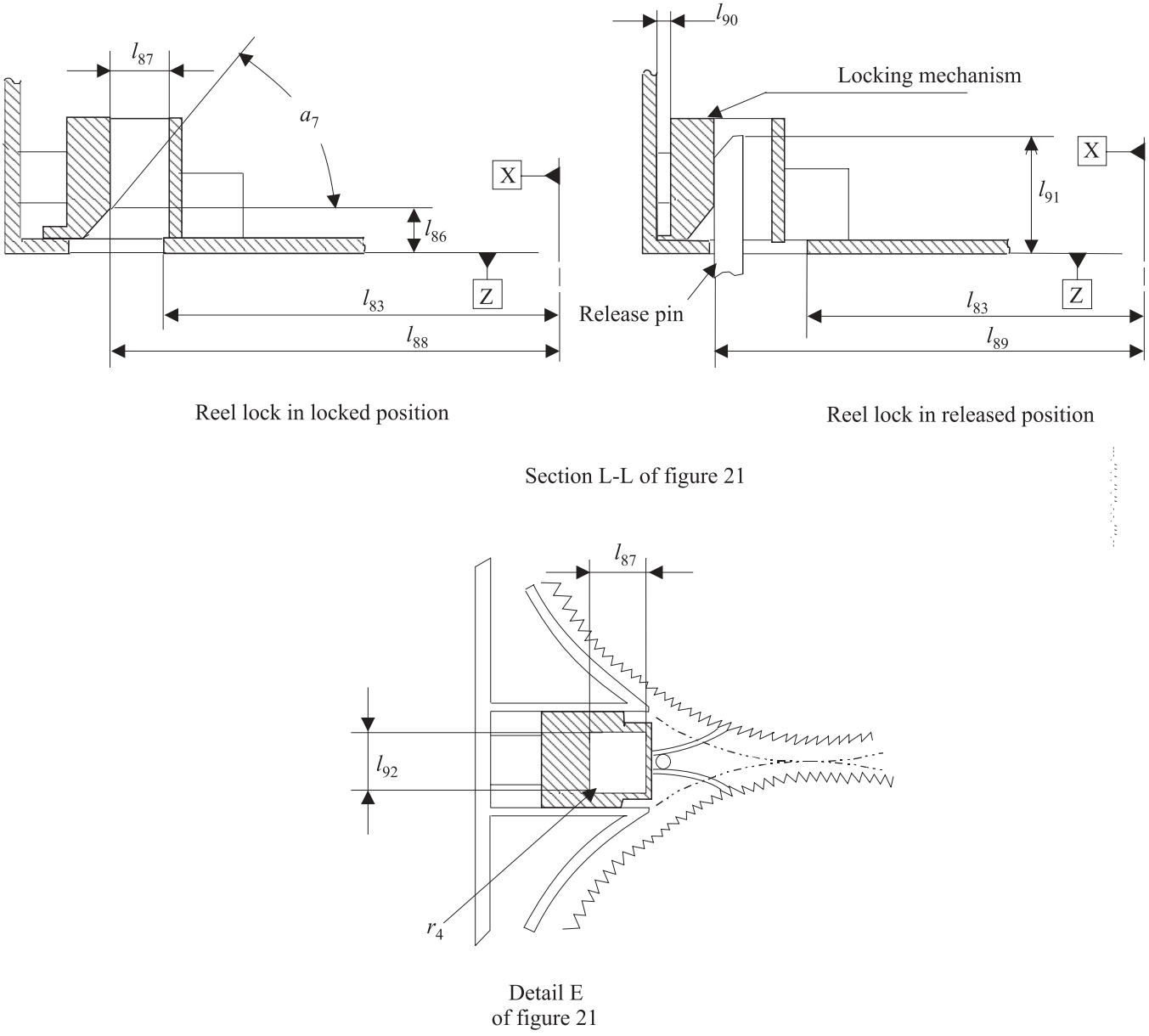

Figure 16 - Reel lock release

© ISO/IEC 2003 – All rights reserved

Copyright International Organization for Standardization
Provided by IHS under license with ISO
No reproduction or networking permitted without license from IHS
Not for Resale

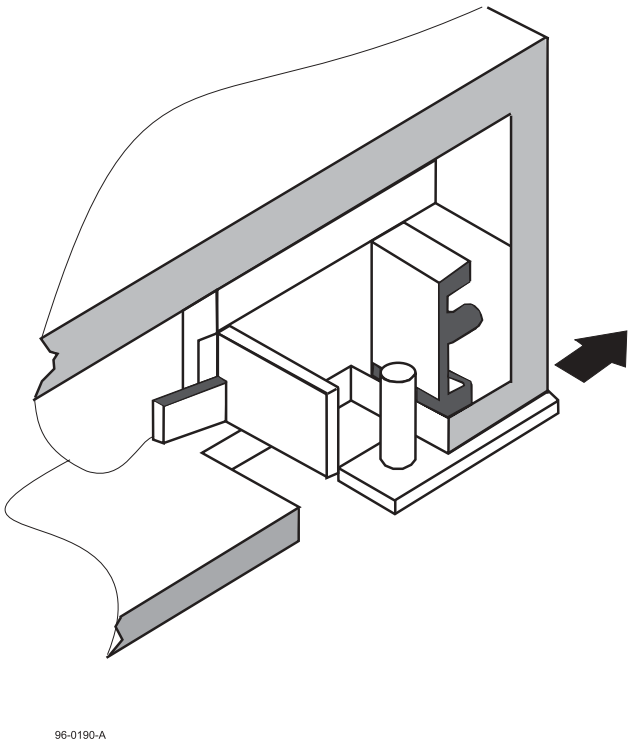

Figure 17 - Direction of the force needed to unlock the reel lock

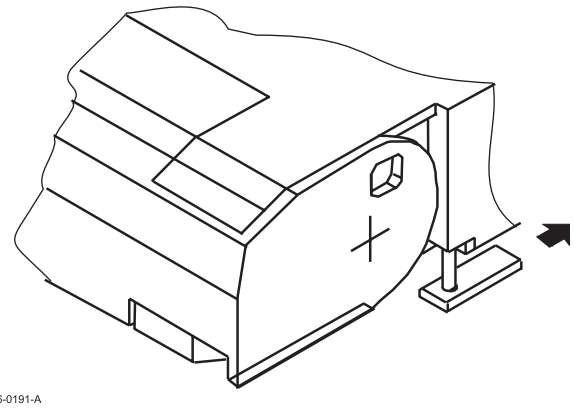

Figure 18 - Direction of the force needed to unlock the lid lock

© ISO/IEC 2003 – All rights reserved
Copyright International Organization for Standardization
Provided by IHS under license with ISO
No reproduction or networking permitted without license from IHS
Not for Resale

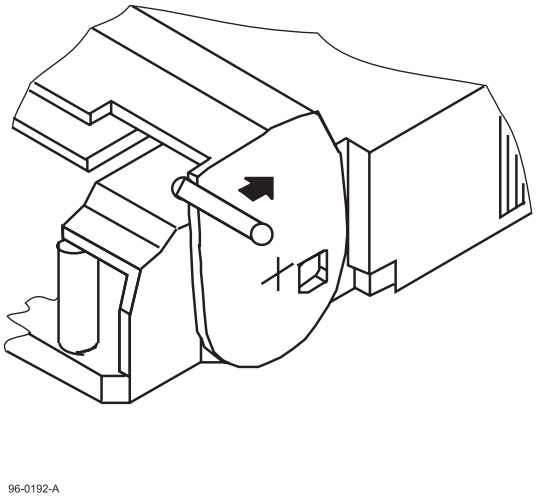

Figure 19 - Direction of the force needed to open the lid

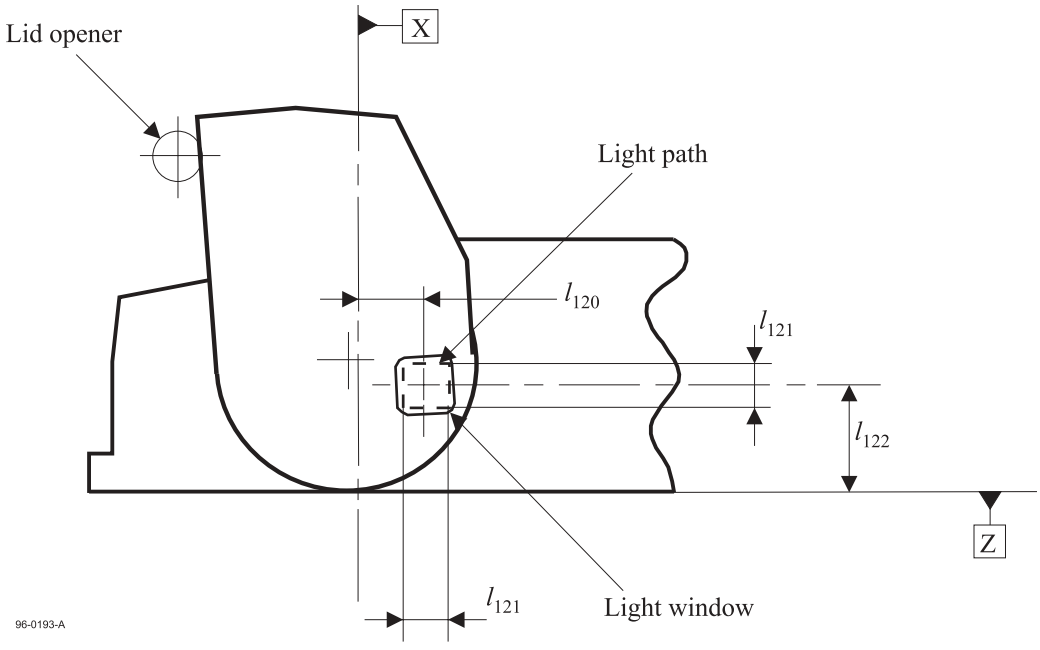

Figure 20 - Light path and light windows

© ISO/IEC 2003 – All rights reserved
Copyright International Organization for Standardization
Provided by IHS under license with ISO
No reproduction or networking permitted without license from IHS
Not for Resale

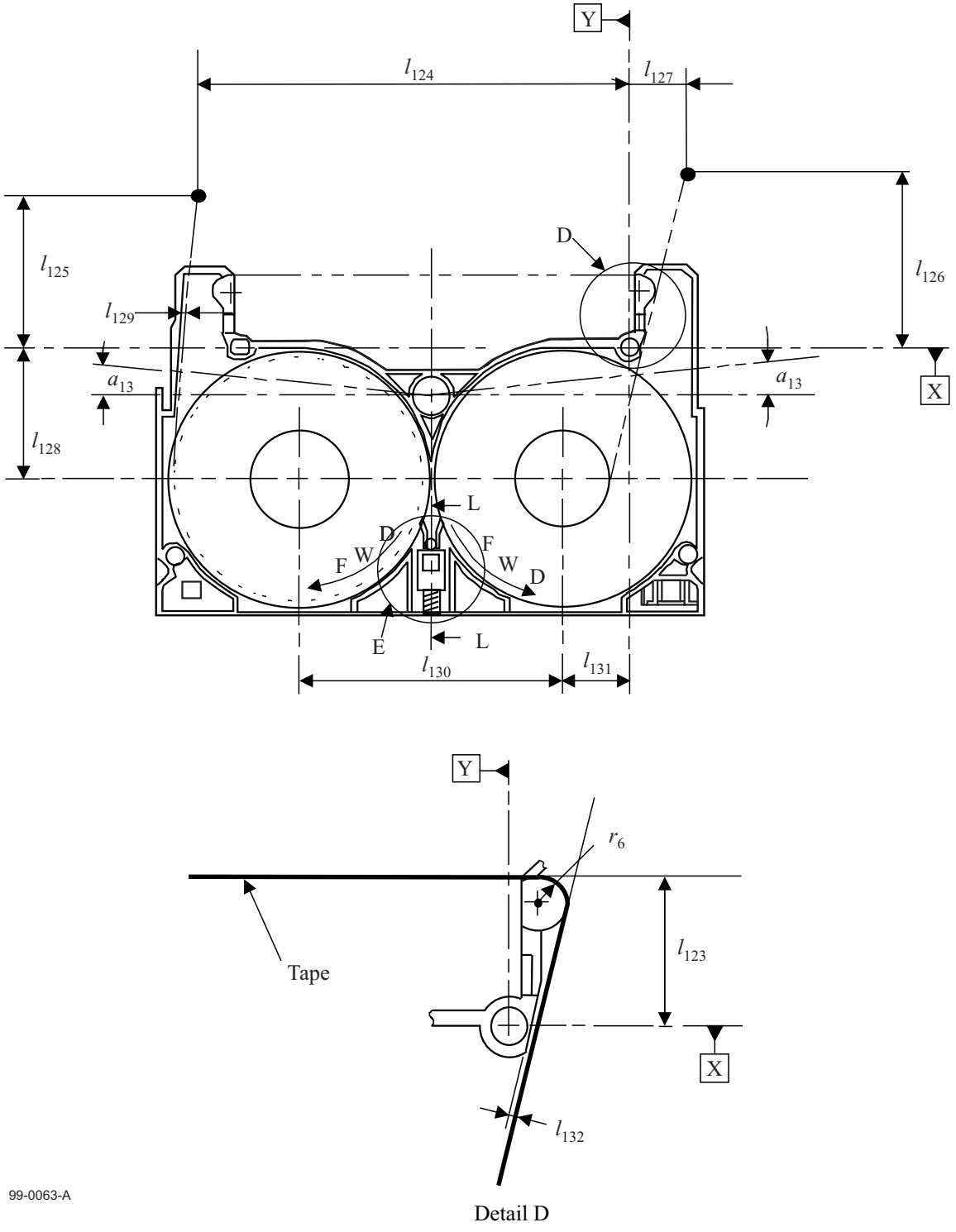

Figure 21 - Internal tape path and light path

© ISO/IEC 2003 – All rights reserved
Copyright International Organization for Standardization
Provided by IHS under license with ISO
No reproduction or networking permitted without license from IHS
Not for Resale

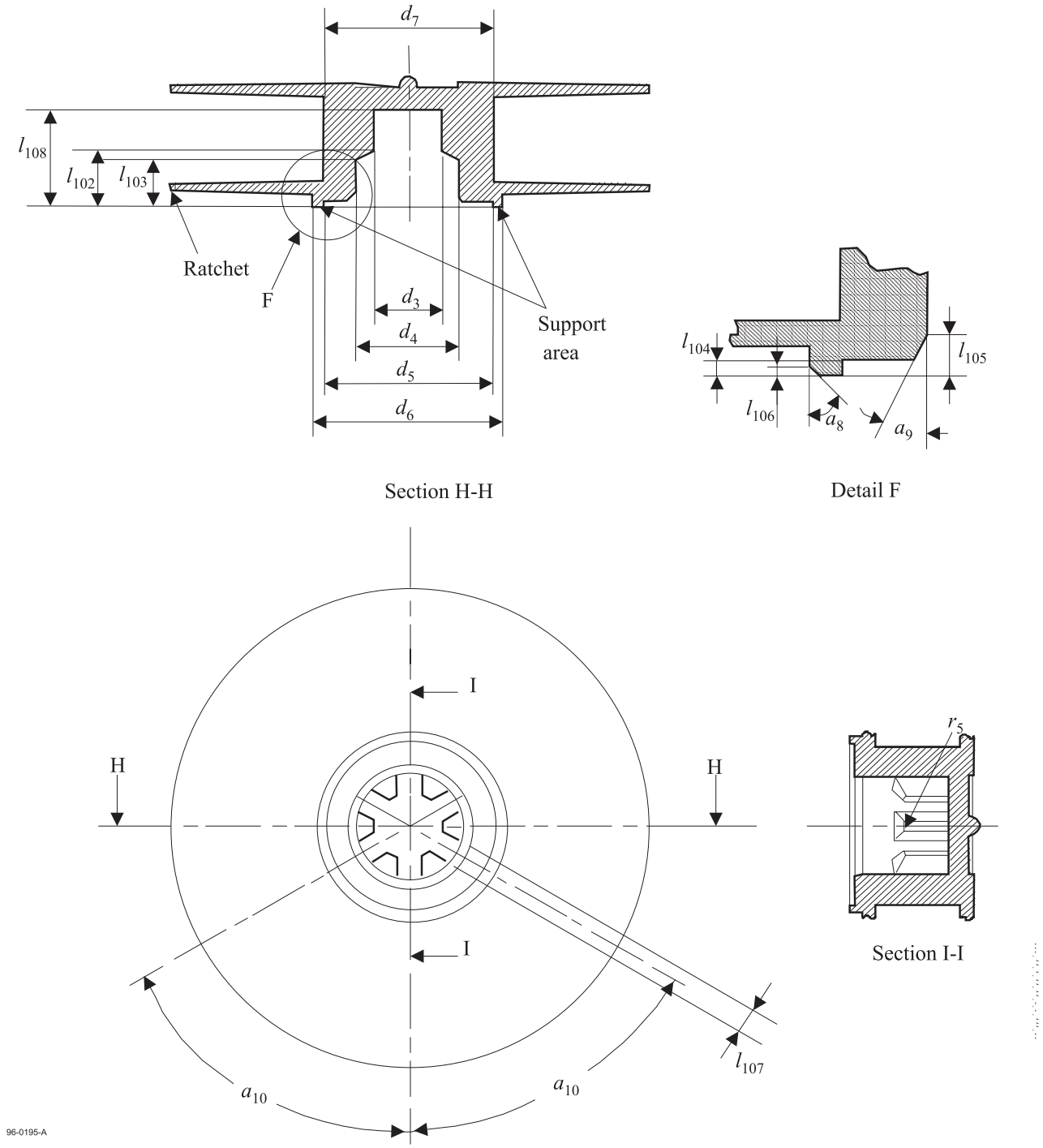

Figure 22 - Cartridge reel

© ISO/IEC 2003 – All rights reserved
Copyright International Organization for Standardization
Provided by IHS under license with ISO
No reproduction or networking permitted without license from IHS
Not for Resale

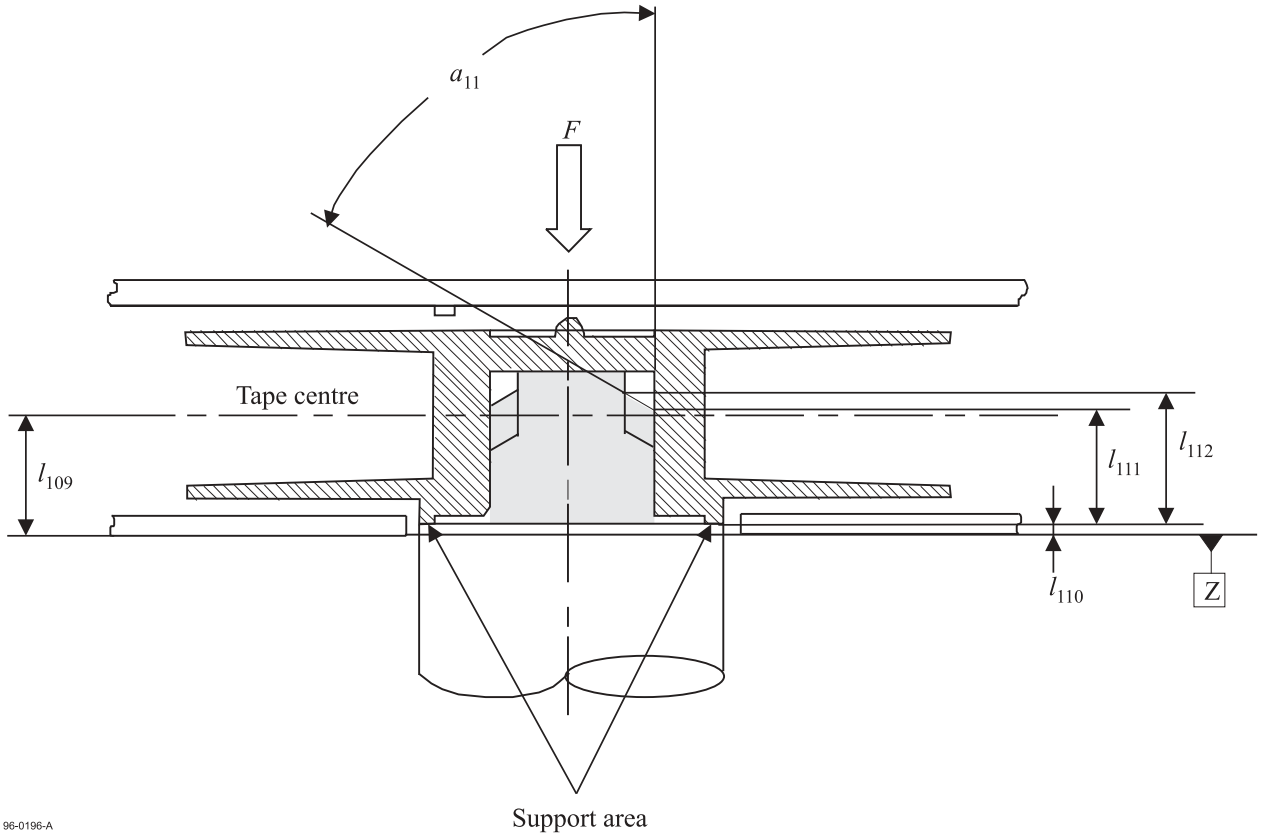

Figure 23 - Interface with the drive spindle

© ISO/IEC 2003 – All rights reserved
Copyright International Organization for Standardization
Provided by IHS under license with ISO
No reproduction or networking permitted without license from IHS
Not for Resale

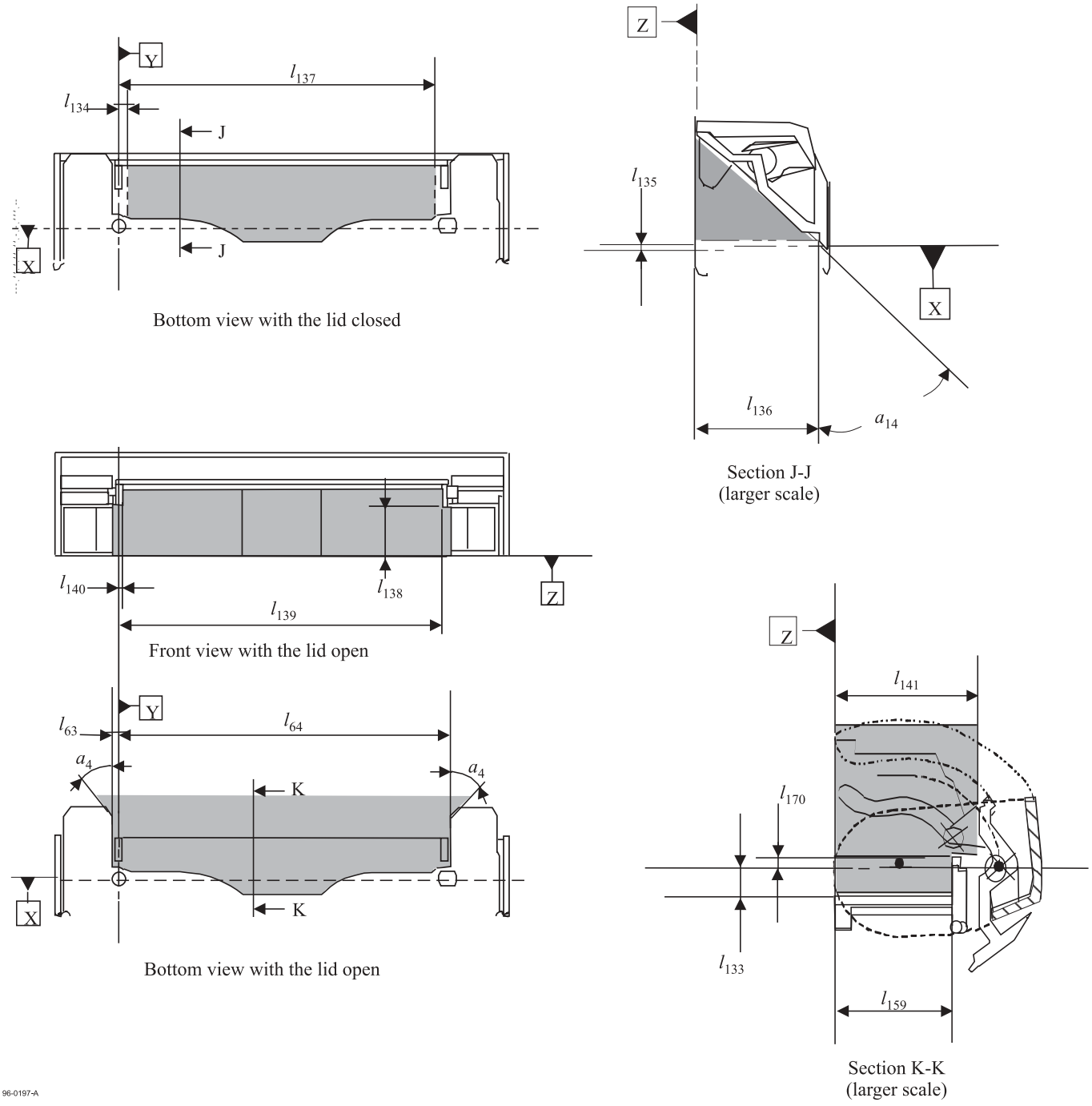

Figure 24 - Tape access cavity clearance

© ISO/IEC 2003 – All rights reserved
Copyright International Organization for Standardization
Provided by IHS under license with ISO
No reproduction or networking permitted without license from IHS
Not for Resale

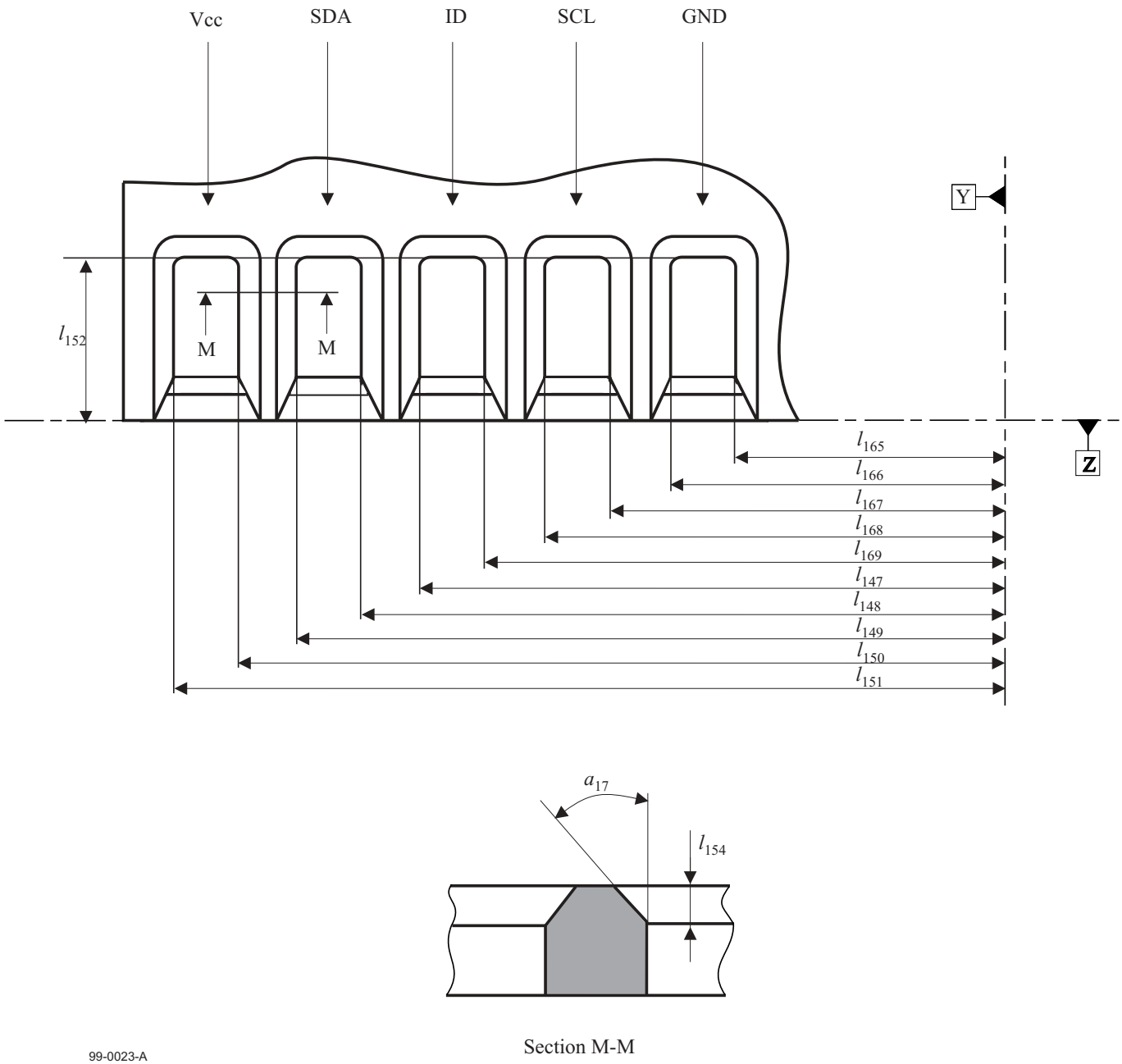

Figure 25 - Case access holes, enlarged partial view, rear side

© ISO/IEC 2003 – All rights reserved
Copyright International Organization for Standardization
Provided by IHS under license with ISO
No reproduction or networking permitted without license from IHS
Not for Resale

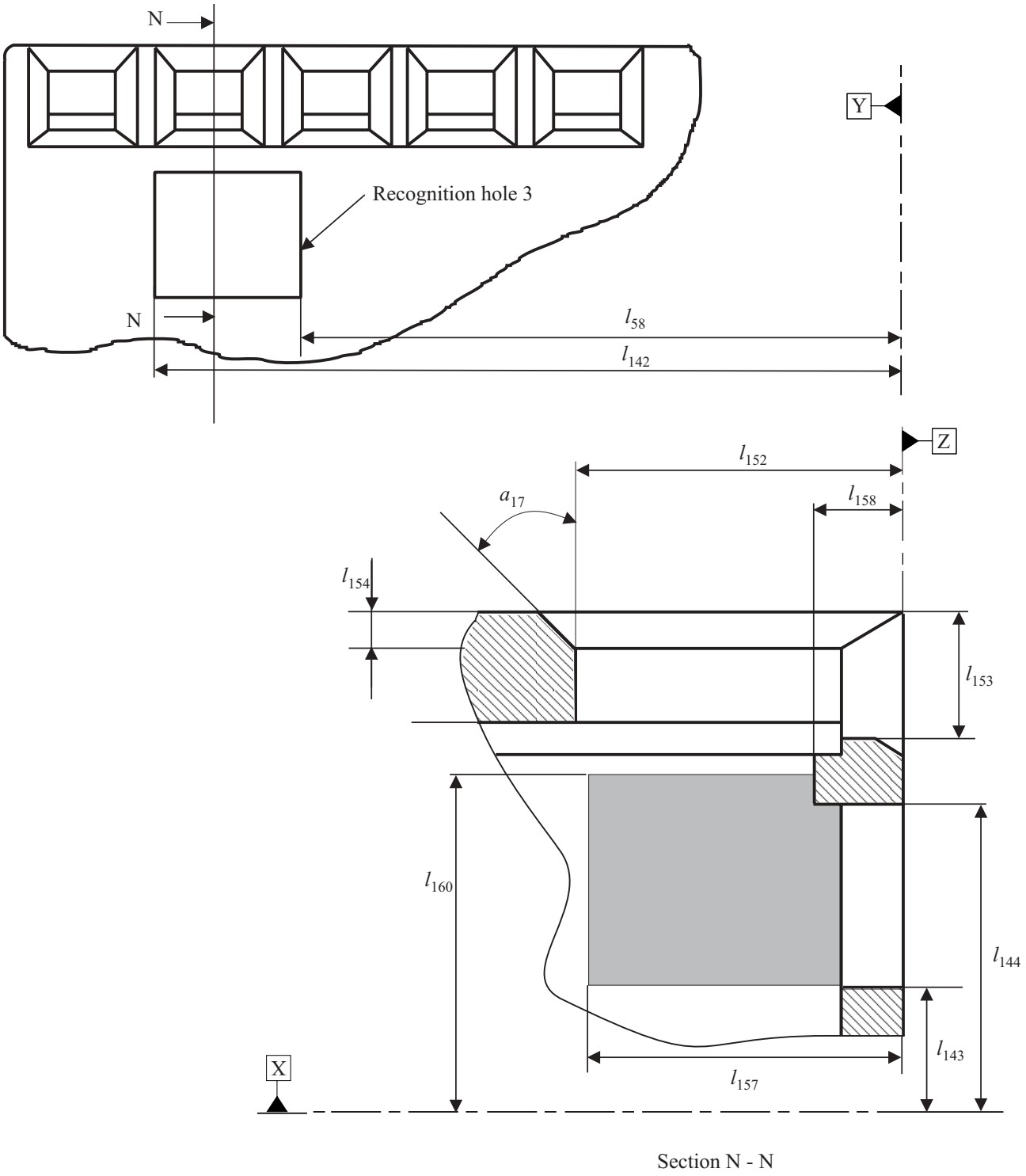

Figure 26 - Case access holes, enlarged partial view, bottom side

© ISO/IEC 2003 – All rights reserved
Copyright International Organization for Standardization
Provided by IHS under license with ISO
No reproduction or networking permitted without license from IHS
Not for Resale

Section 3 - Requirements for the unrecorded tape

9 Mechanical, physical and dimensional characteristics of the tape

This International Standard specifies two types of cartridge depending on the thickness of the tape.

Type A : The nominal thickness of the tape shall be 7,0 μm.
Type B : The nominal thickness of the tape shall be 5,2 μm.

9.1 Materials

The recordable area of the tape shall consist of a base material coated on one side with a strong yet flexible layer of evaporated metal material or equivalent. The back surface may be coated. The base material shall be

For Type A : An oriented polyethylene terephthalate film or equivalent
For Type B : A polyaramid film or equivalent

There shall be a leader tape between the take-up hub and PBOT. There shall be a trailer tape between PEOT and the supply hub. The leader and trailer tapes shall consist of a translucent length of the same oriented polyethylene terephthalate or an equivalent base material.

The leader and trailer tapes shall each be attached to the magnetic tape by means of a length of splicing tape that extends over each such joint. The splicing tape shall consist of polyethylene terephthalate (or equivalent), coated on one side with an acrylic (or equivalent) adhesive material.

9.2 Tape length

9.2.1 Length of magnetic tape

The length of the tape shall be measured between PBOT and PEOT.

Type A : The length of the tape shall be in the range 5,0 m to 170,0 m.
Type B : The length of the tape shall be in the range 5,0 m to 230,0 m.

9.2.2 Length of leader and trailer tapes

The length of the leader and trailer tapes shall be in the range 70 mm to 90 mm. The joints between the leader and trailer tapes and the magnetic tape shall be perpendicular to the Tape Reference Edge within 1°.

9.2.3 Length of the splicing tapes

The length of the splicing tapes shall be 13 mm max. They shall extend for a distance of 6,5 mm ± 1,5 mm over the leader and trailer tapes.

9.3 Tape width

9.3.1 Width of magnetic, leader and trailer tapes

The width of the magnetic tape shall be 8,00 mm ± 0,01 mm. The difference between the largest and smallest width shall not exceed 6 μm peak-to-peak.

The width of the leader tape and of the trailer tape shall be 8,00 mm ± 0,02 mm.

Procedure

i. Cover a section of the tape with a glass microscope slide.

ii. Measure the width from edge to edge with no tension applied to the tape using a calibrated microscope, profile projector, or equivalent having an accuracy of at least 2,5 μm.

iii. Repeat the measurement to obtain tape widths at a minimum of five different positions along a minimum tape length of 1,0 m.

The tape width is the average of the widths measured.

9.3.2 Width and position of the splicing tape

The width of the splicing tape and its position across the width of the leader, trailer and magnetic tapes shall be such that the bottom edge of the splicing tape shall be not more than 0,6 mm from the bottom edges of the other tapes, and the top edge of the splicing tape shall be not more than 0,6 mm from their top edges. Neither edge of the splicing tape shall extend beyond the edges of the leader, trailer and magnetic tapes.

--`,,`-`-`,,`,,`,`,,`---

© ISO/IEC 2003 – All rights reserved
Copyright International Organization for Standardization
Provided by IHS under license with ISO
No reproduction or networking permitted without license from IHS
Not for Resale

9.4 Discontinuities

Between PBOT and PEOT there shall be no discontinuities in the magnetic tape such as those produced by tape splicing or perforations.

9.5 Tape thickness

9.5.1 Thickness of the magnetic tape

The thickness of the magnetic tape at any point shall be :

For Type A : In the range 6,5 µm to 7,3 µm.
For Type B : In the range 5,0 µm to 5,5 µm.

9.5.2 Thickness of the leader and trailer tape

The thickness of the leader and trailer tapes at any point shall be in the range 9 µm to 17 µm.

9.5.3 Thickness of the splicing tape

The thickness of the splicing tape at any point shall be 27 µm max.

9.6 Longitudinal curvature

The radius of curvature of the edge of the tape shall be 33 m min.

Procedure

i. Allow a 1,0 m length of tape to unroll and assume its natural curvature on a flat smooth surface.

ii. Measure the deviation from a 1,0 m chord.

iii. The deviation shall not be greater than 3,8 mm.

iv. This deviation corresponds to the minimum radius of curvature of 33 m if measured over an arc of a circle.

9.7 Cupping

The departure across the width of tape from a flat surface shall be 0,7 mm max.

Procedure

i. Cut a 150 mm ± 10 mm length of tape.

ii. Condition the tape for a minimum of 3 h in the test environment by hanging it so that the coated surface is freely exposed to the test environment.

iii. Lay the tape across two cylindrical guides that are placed horizontally with the centres 35 mm apart.

iv. Attach a 0,3 g mass to each end of the tape.

v. Measure the distance between the plane established by the edges of the tape and the maximum deviation from the plane.

9.8 Coating adhesion

The force required to peel any part of the coating from the tape base material shall be 0,1 N min.

Procedure

i. Take a test piece of the tape approximately 380 mm long and scribe a line through the coating across the width of the tape 125 mm from one end.

ii. Using a double-sided pressure sensitive tape, attach the test piece to a smooth metal plate, with the coated surface facing the plate, as shown in figure 27.

iii. Fold the test piece over 180° adjacent to, and parallel with the scribed line. Attach the metal plate and the free end of the test piece to the jaws of a universal testing machine such that when the jaws are separated the tape is peeled. Set the jaw separation rate to 254 mm/min.

iv. Note the force at which any part of the coating first separates from the base material.

v. If this is less than 0,1 N, the tape has failed the test.

vi. If the test piece peels away from the double-sided pressure sensitive tape before the force exceeds 0,1 N, an alternative type of double-sided pressure tape shall be used.

© ISO/IEC 2003 – All rights reserved

Copyright International Organization for Standardization
Provided by IHS under license with ISO
No reproduction or networking permitted without license from IHS
Not for Resale

vii. If the back surface of the tape is coated, repeat the procedure for the back coating.

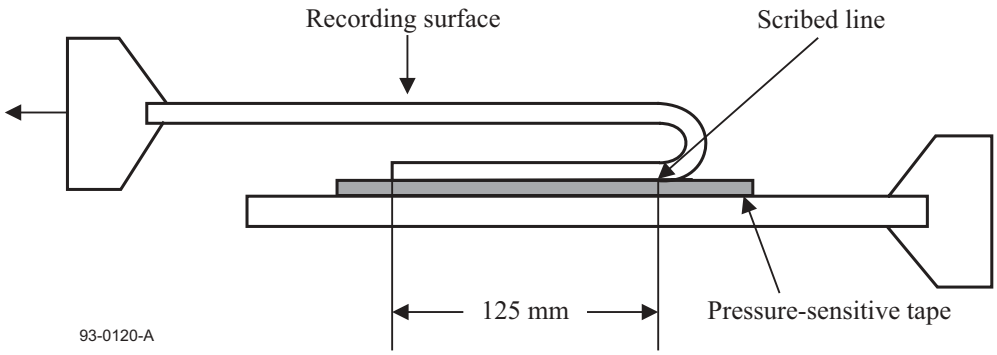

Figure 27 - Measurement of the coating adhesion

9.9 Layer-to-layer adhesion

There shall be no tendency for the test piece to stick or for the coating to peel.

Procedure

i. Attach one end of a test piece of magnetic tape of 1 m length to the surface of a glass tube of 36 mm in diameter.

ii. Wind the tape onto the tube at a tension of 1,1 N.

iii. Store the wound test piece in a temperature of 45 °C ± 3 °C and a relative humidity of 80 % for 4 h.

iv. Store for a further 24 h in the testing environment.

v. Apply a force of 0,1 N to the free end of the test piece and allow it to unwind slowly.

9.10 Tensile strength

Measurements shall be made in accordance with ISO/R 527. The length of the test piece shall be 200 mm. The length of the leader tape test piece shall be 50 mm. The length of the trailer tape test piece shall be 50 mm. The rate of elongation for all tensile tests shall be 100 mm/min - ISO/R 527, Rate D.

9.10.1 Breaking strength

The breaking strength of the tape shall be 6 N min.

Procedure

i. Load the test piece until the breaking point is reached.

ii. The force required to reach that point is the breaking strength.

9.10.2 Yield strength

The yield strength is the force required to produce a 5 % elongation of the tape.

The yield strength shall be 3 N min.

9.11 Residual elongation

The residual elongation, expressed as a percentage of the original length, shall be less than 0,04 %.

Procedure

i. Measure the initial length of a test piece of approximately 1 m with a maximum applied force of 0,20 N.

ii. Apply an additional force per total cross-sectional area of 20,5 N/mm^2 for a period of 10 minutes.

iii. Remove the additional force and measure the length after 10 minutes.

9.12 Electrical resistance of the recording surface

The electrical resistance of any square area of the recording surface shall be 10^3 Ω max.

© ISO/IEC 2003 – All rights reserved
Copyright International Organization for Standardization
Provided by IHS under license with ISO
No reproduction or networking permitted without license from IHS
Not for Resale

Procedure

i. Condition a test piece of tape in the test environment for 24 h.

ii. Position the test piece over two 24-carat gold-plated, semicircular electrodes having a radius r = 10 mm and a finish of at least N4, so that the recording surface is in contact with each electrode.

iii. These electrodes shall be placed parallel to the ground and parallel to each other at a distance d = 8 mm between their centres (see figure 28).

iv. Apply the force necessary to produce a tension of 5 N/mm^2 to each end of the test piece.

v. Apply a d.c. voltage of 7 V ± 1 V across the electrodes and measure the resulting current flow. From this value, determine the electrical resistance.

vi. Repeat for a total of five positions along the test piece and average the five resistance readings.

When mounting the test piece ensure that no conducting paths exist between the electrodes except that through the coating under test.

Note - Particular attention should be given to keeping the surfaces clean.

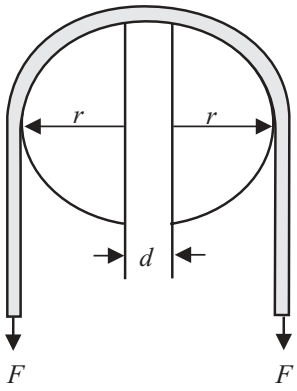

93-0050-B

Figure 28 - Measurement of electrical resistance

9.13 Tape winding

The magnetic surface of the tape shall face outward from the cartridge and reels.

9.14 Light transmittance of the tape

The light transmittance of the magnetic tape shall be 5 % max.

The light transmittance of the leader and trailer tapes shall be 60 % min.

The method for measuring light transmittance is given in annex A.

9.15 Recognition stripe

A single recognition stripe shall be printed on the back side of the leader across the full width of the tape as shown in figure 29. The length of the stripe shall be

l_{180} = 3,0 mm ± 0,1 mm

The position of the edge of the stripe closest to the splice shall be at a distance

l_{181} = 20,7 mm ± 10,8 mm

from the splice of the leader and magnetic tape.

The light transmittance of the stripe shall be 10 % max. when measured according to annex A.

© ISO/IEC 2003 – All rights reserved

Copyright International Organization for Standardization
Provided by IHS under license with ISO
No reproduction or networking permitted without license from IHS
Not for Resale

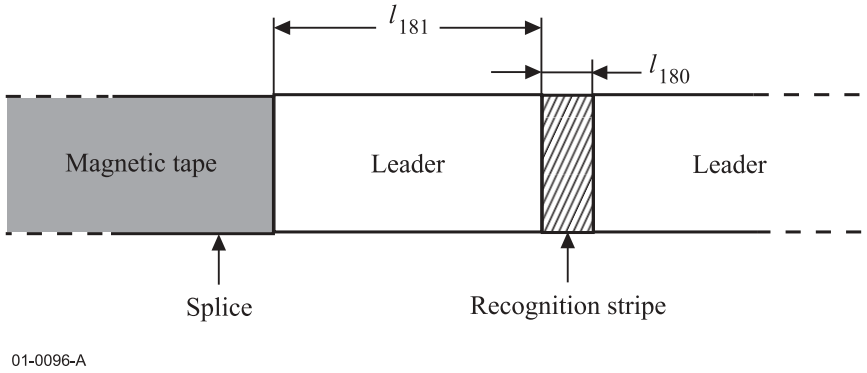

Figure 29 - Location of the recognition strip

10 Magnetic recording characteristics

The magnetic recording characteristics shall be defined by the testing requirements given below.

When performing these tests, the output or resultant signal shall be measured on a read-while-write pass for both a tape calibrated to the Master Standard Reference Tape and the tape under test, on the same equipment.

The following conditions shall apply to the testing of all magnetic recording characteristics, unless otherwise stated.

tape condition	: a.c. erased to a level of less than 0,1 % of the Average Signal Amplitude at 3 436,4 ftpmm.
diameter of the scanner	: 40,00 mm $^{+\ 0,01\ mm}_{-\ 0,00\ mm}$
rotation speed of the scanner	: 6 000,0 rpm ± 0,5 rpm
tape speed	: 27,51 mm/s ± 0,30 mm/s
test tracks	: Positive azimuth
read gap length	: 0,15 µm ± 0,05 µm
recording current	: Test Recording Current
recorded track width	: 5,5 µm ± 0,5 µm
tape tension	: 0,050 N ± 0,005 N measured at the input of the scanner
write gap length	: 0,18 µm ± 0,05 µm
read head track width	: 7 µm to 9 µm
read head setting during a read pass	: the read head shall cover the whole width of the recorded track
read output level	: taken at the appropriate fundamental frequency

10.1 Typical Field

The Typical Field shall be between 80 % and 112 % of the Recording Field.

Traceability to the Reference Field is provided by the calibration factor supplied with each Secondary Standard Reference Tape.

10.2 Signal Amplitude

The Average Signal Amplitude at the physical recording density of 3 436,4 ftpmm shall be between 90 % and 140 % of that for the Master Standard Reference Tape.

The Average Signal Amplitude at the physical recording density of 1 718,2 ftpmm shall be between 90 % and 130 % of that for the Master Standard Reference Tape.

© ISO/IEC 2003 – All rights reserved
Copyright International Organization for Standardization
Provided by IHS under license with ISO
No reproduction or networking permitted without license from IHS
Not for Resale

Traceability to the Average Signal Amplitude of the Master Standard Reference Tape is provided by the calibration factors supplied with each Secondary Standard Reference Tape.

10.3 Resolution

The ratio of the Average Signal Amplitude at the physical recording density of 3 436,4 ftpmm to that at the physical recording density of 1 718,2 ftpmm shall be between 85 % and 120 % of the same ratio for the Master Standard Reference Tape.

Traceability to the resolution for the Master Standard Reference Tape is provided by the calibration factors supplied with each Secondary Standard Reference Tape.

10.4 Overwrite

Overwrite is the ratio of the Average Signal amplitude of the residual of a low density recording after overwriting at a higher density to the Average Signal Amplitude of the original low density recording.

Traceability to the overwrite ratio for the Master Standard Reference Tape is provided by the calibration factors supplied with each Secondary Standard Reference Tape.

Procedure

i. a.c. erase the tape. Record at the physical density of 763,7 ftpmm.

ii. Measure the Average Signal Amplitude.

iii. Overwrite at the physical recording density of 6 872,9 ftpmm and measure the Average Signal Amplitude of the residual 763,7 ftpmm signal.

iv. Repeat for the Secondary Standard Reference Tape.

Requirement

$$\text{The ratio} = \frac{\text{Residual Average Signal Amplitude at 763,7 ftpmm after overwriting}}{\text{Average Signal Amplitude of the original recording at 763,7 ftpmm}}$$

shall be less than 120 % of the same ratio for the Master Standard Reference Tape.

10.5 Ease of erasure

When a tape has been recorded at 763,7 ftpmm with the Test Recording Current and then passed through a longitudinal steady erasing field of 320 000 A/m, any remaining signal shall not exceed 2 % of the Standard Reference Amplitude for that density. The erasing field shall be reasonably uniform, for example, the field in the middle of a solenoid. This measurement shall be made with a band pass filter passing at least the first three harmonics.

10.6 Tape quality

10.6.1 Missing pulses

A missing pulse is a loss of read signal amplitude. A missing pulse exists when the base-to-peak read signal is 40 %, or less, of half the Average Signal Amplitude for the recording density of 1 718,2 ftpmm on the same tape.

10.6.2 Missing pulse zone

A missing pulse zone commences with a missing pulse and ends when a length of 1 mm of track has been measured. If a missing pulse zone continues for a distance exceeding 1 mm, a new missing pulse zone commences.

A missing pulse zone does not continue from one track to the next.

The missing pulse zone rate shall be less than 1 in 5×10^6 flux transitions and applies to both positive and negative azimuth tracks.

10.7 Signal-to-Noise Ratio (SNR) characteristic

The Signal-to-Noise Ratio is the average rms read signal amplitude divided by the average integrated rms

$$\text{SNR} = 20 \log \frac{\text{Average rms signal amplitude}}{\text{Average integrated rms noise amplitude}} \text{ dB}$$

© ISO/IEC 2003 – All rights reserved

Copyright International Organization for Standardization
Provided by IHS under license with ISO
No reproduction or networking permitted without license from IHS
Not for Resale

Requirement

The SNR for the tape under test (SNR_{tape}) shall be better than -2 dB relative to the SNR for the Master Standard Reference Tape (SNR_{MSRT}) when measured according to the procedure defined in annex B.

Traceability to the SNR_{MSRT} is provided by the calibration factor supplied with each Secondary Standard Reference Tape.

Section 4 - Requirements for an interchanged tape

11 Format

11.1 General

The smallest collection of data supported by the format is a record. A record is the smallest distinct set of data bytes supplied, e.g. from a host, for processing and recording by a tape drive system, and the smallest distinct set of data to be read from tape, reprocessed and made available, e.g. to a host, by a tape drive system. Two types of record are supported, namely Processed Records and Unprocessed Records.

A recorded tape shall contain Unprocessed Records or Processed Records or both. It may also contain Separator Marks. Both Processed Records and Unprocessed Records are stored on tape as Entities. Separator Marks may be used by the host to indicate the logical separation(s) of the data within a structuring scheme.

Entities and Separator Marks are collected into groups. An index within each group describes the content of the group. A series of transformations, namely randomizing, interleaving, blocking, the generation and inclusion of two Reed-Solomon error correcting codes, and the translation of bytes to Channel bits, is applied to each group prior to recording. A third Reed-Solomon error correcting code may be applied to the group; in this case, the resulting bytes are transformed and recorded in the frames that follow the group on the tape.

Each group is recorded on a group of tracks. The part of each track in which the user data, Separator Marks and associated information are recorded is called the Main Data Zone of the track. Additional information about the contents of the group, the location of the track(s) and the contents of the track(s) is recorded in the Headers of the Recorded Data Blocks in the ID Area of the Main Data Zone.

In the following description all operations on the data received from the host computer, including the use of error detecting and correcting codes, but excluding processing, are described. Then the method of recording on the tape and the tape layout itself will be described. However, because of the inherent characteristics of this format, where required, advance references to the tape layout will also be made in the course of the description of the operations on the data.

11.2 Basic Groups

The data to be recorded shall be grouped in Basic Groups of 2 405 376 bytes. Each Basic Group shall be identified by a running number allocated consecutively starting with 0. In each Basic Group the bytes are identified by a running number from 1 to 2 405 376.

The structure of Basic Group No. 0 is not specified by this International Standard. The data for this group is generated by the tape system. It is recorded as the Vendor Group, (see annex K).

Data and Separator Marks received from the host computer shall be grouped in Basic Groups, following Basic Group No. 0, starting with Basic Group No. 1. These Basic Groups shall be structured as follows.

Note - In this International Standard, there are two types of Separator Marks that are referred to as Separator 1 and Separator 2. Some other standards, e.g. those which define an interface between a tape drive and a host computer, use the terms "file mark" and "set mark" to denote Separator Marks. It is recommended that Separator 1 be equated to file mark and Separator 2 be equated to set mark.

--`,,,`-`-`,,`,,`,`,,`---
© ISO/IEC 2003 – All rights reserved
Copyright International Organization for Standardization
Provided by IHS under license with ISO
No reproduction or networking permitted without license from IHS
Not for Resale

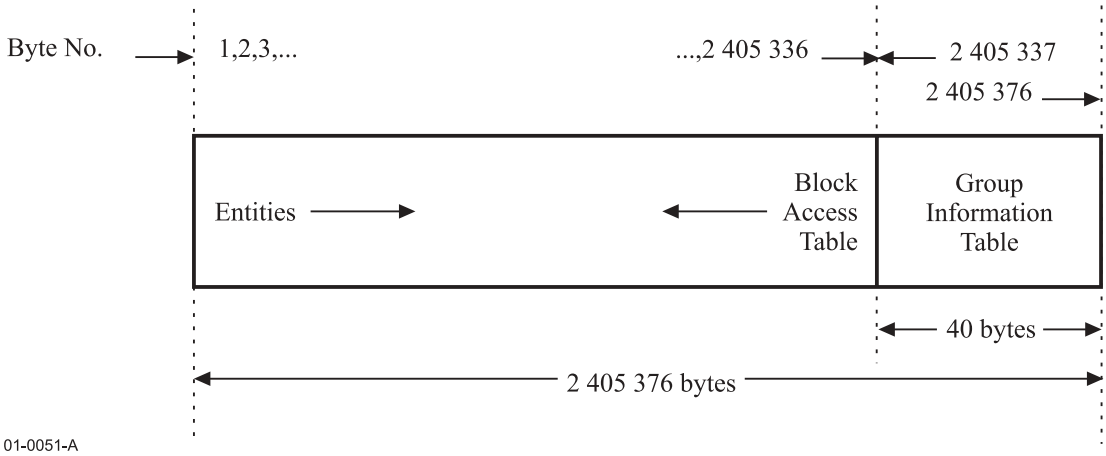

Figure 30 - Structure of a Basic Group

Data constituting Entities shall progress into the Basic Group from left to right (as seen in figure 30). At the same time a part of the Basic Group, called the Block Access Table (BAT), shall progress from right to left. The Group Information Table (GIT) shall occupy the last 40 bytes of the Basic Group.

11.2.1 Entity

11.2.1.1 Content

An Entity comprises an Entity Header and a sequence of consecutive Records. The Entity Header shall be 8 bytes in length. It shall precede the Record Sequence.

All Records in an Entity shall be either Processed Records or Unprocessed Records.

All Records of an Entity, whether Processed or Unprocessed, shall be of equal length.

An Entity may span Basic Groups, provided that all of the Entity Header and the first 8 bits of the first or single Record of the Entity are within the same Basic Group.

In the case where an Entity spans Basic Groups, the parts thereof, within each Basic Group, are identified as Start Part of Entity, Middle Part of Entity and Last Part of Entity (see 11.2.3.2, to 11.2.3.4).

An Entity shall not contain a Record that does not contain data for interchange.

11.2.1.2 Entity Header

Byte No. 1 is the first byte in the Entity Header, and Byte No. 8 is the last byte in the Entity Header, i.e. is adjacent to the first or single Record of the Entity. The Entity Header shall have the following layout:

Byte No. 1 This byte shall be set to 0000 1000, specifying the number of bytes of the Entity Header, viz. 8.

Byte No. 2 This byte shall be set as follows:

- if the record is an Unprocessed Record, this byte shall be set to the value 1;
- if the record is a Processed Record, this byte shall be set to
  - · the value in the range 2 to 254 corresponding to the registered identifier according to ISO/IEC 11576 of the processing algorithm applied to the record,
  - · the value 255, if the processing algorithm is not registered.

This byte shall not be set to the value 0.

Bytes No. 3 to 5 shall specify in binary notation the length in bytes of the Record before processing, if any (see 11.2.1.1, 2nd paragraph). This length shall not equal 0. Byte No. 3 shall be the MSB, Byte No. 5 shall be the LSB.

Bytes No. 6 to 8 shall specify in binary notation the number of Records in the Entity. This number shall not equal 0. Byte No. 6 shall be the MSB, Byte No. 8 the LSB.

11.2.2 Group Information Table

The Group Information Table shall be a 40-byte field, and shall have the layout shown in table 1.

--`,,`--`,,`,,`,`,,`---
© ISO/IEC 2003 – All rights reserved

Copyright International Organization for Standardization
Provided by IHS under license with ISO
No reproduction or networking permitted without license from IHS
Not for Resale

Table 1 - Group Information Table (continued)

Byte Positions	Length in bytes	Name of the field
2 405 337	1	Set to all ZEROs
2 405 338 to 2 405 340	3	Basic Group Number
2 405 341 to 2 405 344	4	Record Count
2 405 345 to 2 405 348	4	Separator 1 Count
2 405 349 to 2 405 352	4	Separator 2 Count
2 404 453	1	Set to all ZEROs
2 405 354 to 2 405 356	3	Basic Group Number of the Previous Record
2 405 357	1	Set to all ZEROs
2 405 358 to 2 405 360	3	Basic Group Number of the Previous Separator 1
2 405 361	1	Set to all ZEROs
2 405 362 to 2 405 364	3	Basic Group Number of the Previous Separator 2
2 405 365 2 405 366	2	Block Access Table Count Least significant two bytes
2 405 367 2 405 368	2	Count of Records in the Current Basic Group. Least significant two bytes
2 405 369 2 405 370	2	Count of Separators 1 in the Current Basic Group. Least significant two bytes
2 405 371 2 405 372	2	Count of Separators 2 in the Current Basic Group. Least significant two bytes

© ISO/IEC 2003 – All rights reserved
Copyright International Organization for Standardization
Provided by IHS under license with ISO
No reproduction or networking permitted without license from IHS
Not for Resale

Table 1 - Group Information Table (concluded)

2 405 373	1	MSB of the Block Access Table Count
2 405 374	1	MSB of the Count of Records in the current Basic Group
2 405 375	1	MSB of the Count of Separators 1 in the current Basic Group
2 405 376	1	MSB of the Count of Separators 2 in the current Basic Group

Within each field of table 1 the most-significant byte shall be in the lowest-numbered byte position and the least-significant byte shall be in the highest-numbered byte position. However, the last four 1-byte entries contain the most-significant byte of the last four 2-byte entries, respectively.

11.2.2.1 Basic Group Number field

This field shall be a 3-byte field. It shall specify in binary notation the running number of the current Basic Group.

11.2.2.2 Record Count field

This field shall be a 4-byte field. It shall specify in binary notation the sum of the values in the Count of Records field in the current Basic Group fields of the GITs of all Basic Groups since LBOT, up to and including the current Basic Group. Separator Marks shall be counted as records.

11.2.2.3 Separator 1 Count field

This field shall be a 4-byte field. It shall specify in binary notation the number of Separators 1 written since the LBOT including those in the current Basic Group.

11.2.2.4 Separator 2 Count field

This field shall be a 4-byte field. It shall specify in binary notation the number of Separators 2 written since the LBOT including those in the current Basic Group.

11.2.2.5 Basic Group Number of the Previous Record field

This field shall be a 3-byte field. It shall specify in binary notation the running number of the highest-numbered previous Basic Group in which a Separator Mark or the beginning of an Unprocessed Record occurred. If no such Basic Group exists, this field shall be set to all ZEROs.

11.2.2.6 Basic Group Number of the Previous Separator 1 field

This field shall be a 3-byte field. It shall specify in binary notation the running number of the previous highest-numbered Basic Group which contains the last written Separator 1. If no such Basic Group exists, this field shall be set to all ZEROs.

11.2.2.7 Basic Group Number of the Previous Separator 2 field

This field shall be a 3-byte field. It shall specify in binary notation the running number of the previous highest-numbered Basic Group which contains the last written Separator 2. If no such Basic Group exists, this field shall be set to all ZEROs.

11.2.2.8 Block Access Table Count field

This field shall be a 3-byte field. It shall specify in binary notation the number of entries in the Block Access Table. This is not the same as the number of Records or Parts of Records in the Basic Group.

11.2.2.9 Count of Records in the Current Basic Group field

This field shall be a 3-byte field. It shall specify in binary notation the sum of the following:

- the number of Separator Mark entries in the BAT of the current Basic Group,
- the number of Records in the Entities of the current Basic Group,
- the sum of the numbers in Bytes No. 6 to No. 8 of the Entity Headers of all Entities for which there is a Start Part of Entity entry (see 11.2.3.2) in the BAT of the current Basic Group, if such an entry exists,
- the value which is 1 less than the number in Bytes No. 6 to No. 8 of the Entity Header of the Entity for which there is a Start Part of Entity entry (see 11.2.3.2) in the BAT of the current Basic Group, if such an entry exists,

© ISO/IEC 2003 – All rights reserved

Copyright International Organization for Standardization
Provided by IHS under license with ISO
No reproduction or networking permitted without license from IHS
Not for Resale

– the number of Total Count of Entity entries in the BAT of the current Basic Group.

11.2.2.10 Count of Separators 1 field

This field shall be a 3-byte field. It shall specify in binary notation the number of Separators 1 written in the current Basic Group.

11.2.2.11 Count of Separators 2 field

This field shall be a 3-byte field. It shall specify in binary notation the number of Separators 2 written in the current Basic Group.

11.2.3 Block Access Table (BAT)

The BAT shall contain one or more entries for each Entity and each Separator Mark of the Basic Group. Entities not entirely contained in the Basic Group shall also be identified by one or more entries. The first entry shall be written immediately before the Group Information Table, in byte positions 2 405 333 to 2 405 336. Each entry shall be a 4-byte field, structured as shown in figure 31. The 1st byte shall be in the lowest-numbered byte position and the 4th byte shall be in the highest-numbered byte position.

Entry of the Block Access Table			
Flag Byte	Count		
1st byte	2nd byte (MSB)	3rd byte	4th byte (LSB)

Figure 31 - Block Access Table

Depending on the setting of the Flag Byte, the 3-byte Count field shall express in binary notation a number not greater than 2^{24}-1 as specified below. This International Standard specifies the 14 settings of the Flag Byte listed in table 2. Other settings are prohibited by this International Standard.

The most significant bit of the Flag Byte (see table 2) shall be set as follows:

– before EWP it shall be set to ZERO;

– after EWP it shall be set to ONE in the current entry and all following BAT entries of the current Basic Group and in all BAT entries of all following Basic Groups.

Table 2 - Settings of the Flag Byte

	Setting	Entry
Before EWP	0000 0001	Entire Entity
	0000 0010	Start Part of Entity
	0000 0011	Middle Part of Entity
	0000 0100	Last Part of Entity
	0000 0101	Total Count of Entity
	0000 0110	Separator Mark Entity
	0000 0111	Skip
After EWP	1000 0001	Entire Entity
	1000 0010	Start Part of Entity
	1000 0011	Middle Part of Entity
	1000 0100	Last Part of Entity
	1000 0101	Total Count of Entity
	1000 0110	Separator Mark Entity
	1000 0111	Skip

© ISO/IEC 2003 – All rights reserved
Copyright International Organization for Standardization
Provided by IHS under license with ISO
No reproduction or networking permitted without license from IHS
Not for Resale

11.2.3.1 Entire Entity

This entry relates to an Entity and shall specify that the Entity starts and ends in the current Basic Group. The Count field shall specify the number of bytes in the Entity.

11.2.3.2 Start Part of Entity

This entry relates to an Entity and shall specify that the Entity starts in the current Basic Group and ends in a subsequent Basic Group. The Count field shall specify the number of bytes in the Start Part of Entity recorded in the current Basic Group.

11.2.3.3 Middle Part of Entity

This entry relates to an Entity and shall specify that the Entity starts in a previous Basic Group and ends in a subsequent Basic Group. The Count field shall specify the number of bytes in the Middle Part of Entity which is in the current Basic Group.

11.2.3.4 Last Part of Entity

This entry relates to an Entity and shall specify that the Entity starts in a previous Basic Group and ends in the current Basic Group. The Count field shall specify the number of bytes in the Last Part of Entity which is in the current Basic Group. This entry shall be immediately followed in the BAT of the current Basic Group by an entry for Total Count of Entity.

11.2.3.5 Total Count of Entity

Total Count of Entity shall follow the Last Part of Entity entry. This entry relates to the same Entity as that of the immediately preceding entry for Last Part of Entity. The Count field shall specify the total number of bytes in the entire Entity.

11.2.3.6 Separator Mark Entity

This entry shall specify that the Entity is a Separator Mark record. The Count field shall specify the number 0 if the Entity is a Separator 1 record and the number 1 if the Entity is a Separator 2 record.

11.2.3.7 Skip

There shall be a Skip entry as the last entry of the Block Access Table of each Basic Group. This entry indicates that the last byte of user data in the current Basic Group has been reached. The Count field shall specify the remaining number of bytes in the Basic Group. Thus the minimum number that can be specified by the Count field shall be the total number of bytes of the Group Information Table and of the Block Access Table. The Count Value in the Block Access Table for Skip entries shall be a multiple of 4.

11.2.3.8 Count fields

The sum of the numbers specified in the Count fields of those of the types of entry in the following list which are present in the Block Access Table shall be 2 405 376. The list comprises: Skip, Entire Entity, Start Part of Entity, Middle Part of Entity and Last Part of Entity.

11.2.3.9 Valid sequences of entries of the Block Access Table

The valid sequences of entries are specified by table 3, in which states and actions are shown within rectangles, and the entries as (designated by the setting of the Flag Byte) are shown within ellipses.

Table 3 shows only those entries which are valid as the next entry to be encountered in each state or after each action. All other entries are invalid.

© ISO/IEC 2003 – All rights reserved

Copyright International Organization for Standardization
Provided by IHS under license with ISO
No reproduction or networking permitted without license from IHS
Not for Resale

Table 3 - Valid sequences of entries in the Block Access Table

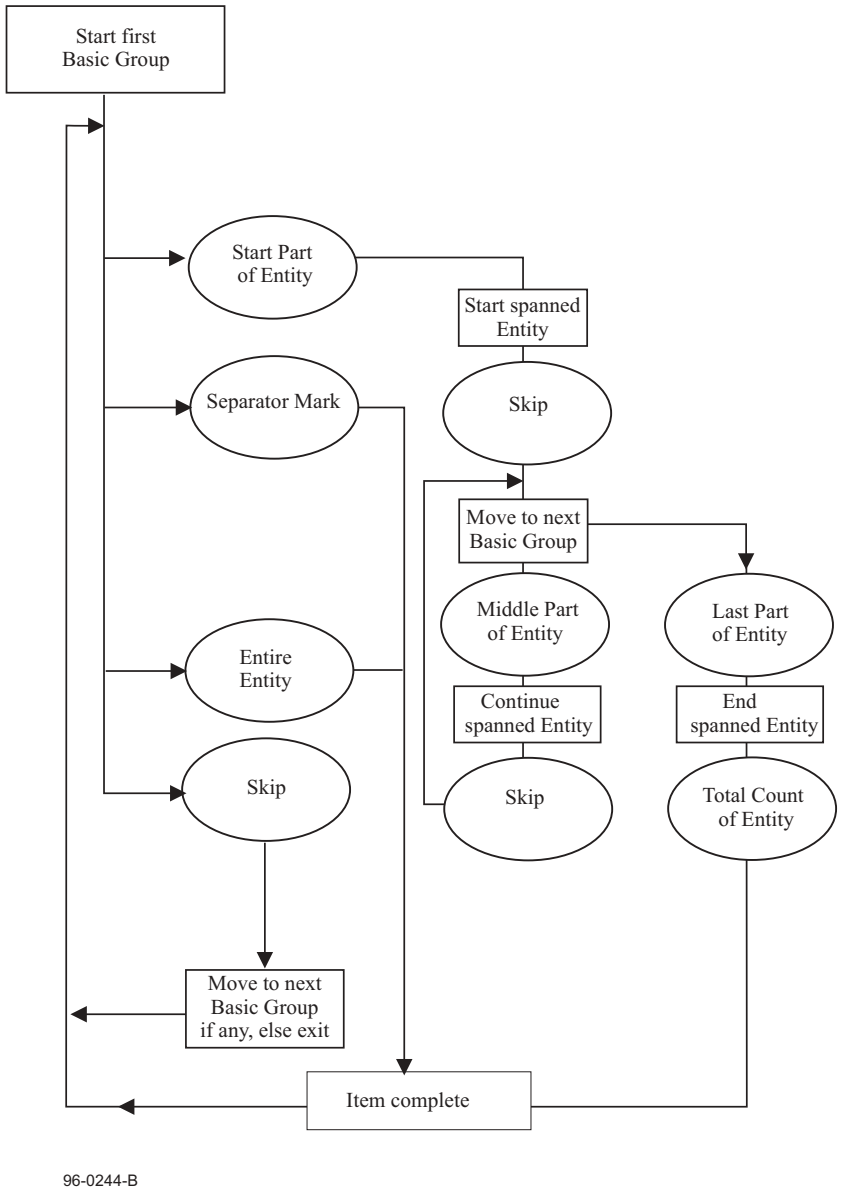

11.3 Sub-Groups

11.3.1 G1 Sub-Group

When a Basic Group has been completed, it shall be split into 36 G1 Sub-Groups, numbered 1 to 36, of 66 816 bytes numbered from 1 to 66 816, starting with the first 66 816 bytes in the first G1 Sub-Group, followed by the next 66 816 bytes in the second G1 Sub-Set, and so on.

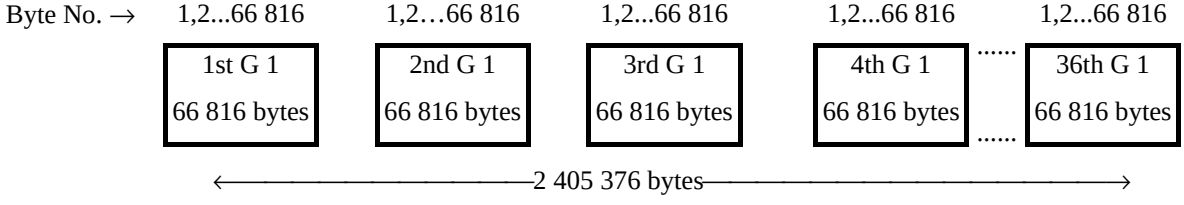

Figure 32 - G1 Sub-Groups

© ISO/IEC 2003 – All rights reserved
Copyright International Organization for Standardization
Provided by IHS under license with ISO
No reproduction or networking permitted without license from IHS
Not for Resale

11.3.2 G2 Sub-Group - Randomizing

The odd numbered bytes of each G1 Sub-Group shall be submitted to an Exclusive OR operation together with a sequence of bits which is the output of the shift register shown in figure 33. The even numbered bytes of each G1 Sub-Group shall be submitted to an Exclusive OR operation together with a sequence of bits which is the output of the shift register shown in figure 33.

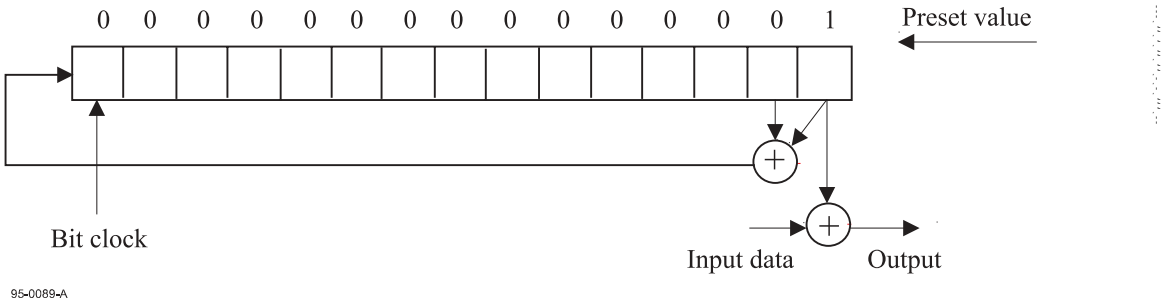

Figure 33 - Shift register

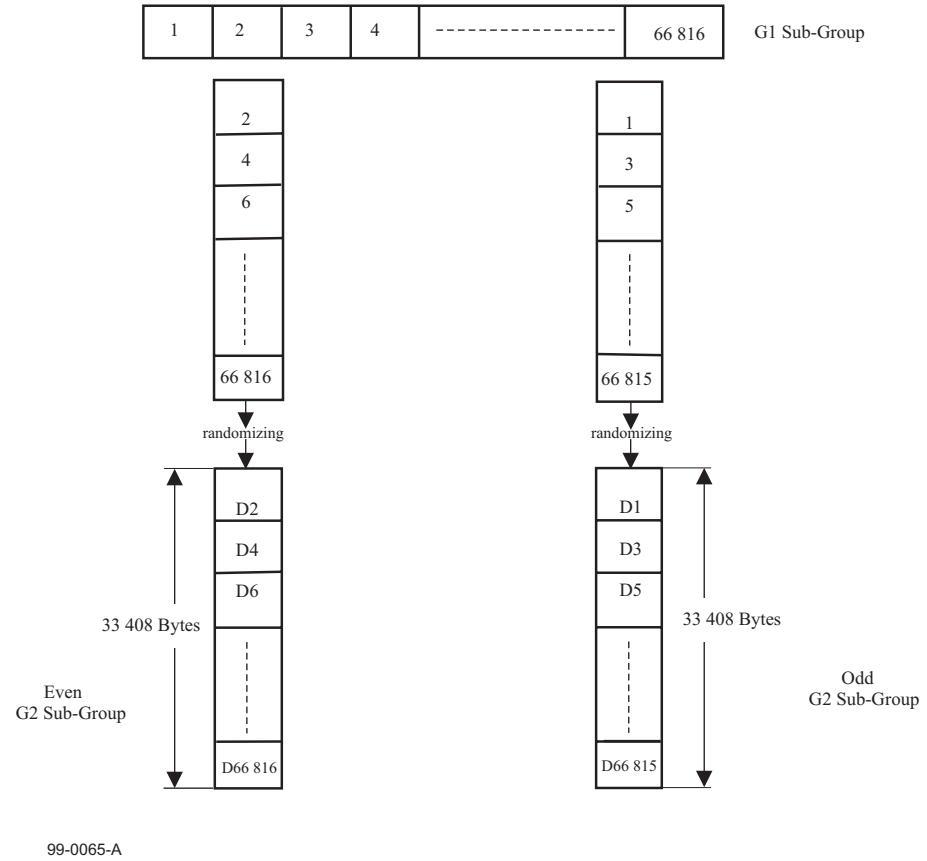

Figure 34 - G2 Sub-Groups

For each byte the least significant bit, i.e. bit b1 shall be input first. The logical operators are Exclusive ORs.

The G1 Sub-Group is thereby transformed into two G2 Sub-Groups: the Even G2 Sub-Group and the Odd G2 Sub-Group, each comprising 33 408 bytes.

For n = 1, 2, ..., 33 408, the bytes D_n of the G1 Sub-Group shall be allocated and numbered as follows:

– the Even G2 Sub-Group comprises bytes D_{2n}

– the Odd G2 Sub-Group comprises bytes $D_{(2n-1)}$

© ISO/IEC 2003 – All rights reserved

Copyright International Organization for Standardization
Provided by IHS under license with ISO
No reproduction or networking permitted without license from IHS
Not for Resale

11.3.3 G3 Sub-Group

A G3 Sub-Group shall consist of an array of 336 Blocks numbered from 1 to 336. The 33 408 bytes of each G2 sub-Group shall be placed in the 288 Blocks from No. 25 to No. 312, so that each Block contains 116 data bytes. Each such Block is completed with 12 bytes of C1 ECC are computed according to annex G over the 116 Data Bytes of the Block.

Once the 288 Blocks are filled as indicated and the corresponding C1 ECC bytes have been generated, C2 ECC bytes are computed over these 288 Blocks and the C1 ECC bytes corresponding to each Block. The resulting 6 144 C2 ECC bytes are entered in Blocks No. 1 to No. 24 and No. 313 to No. 336. The C2 ECC bytes shall be computed as specified in annex G.

This operation shall be performed for the Even G2 Sub-Group and for the Odd G2 Sub-Group, so that each generates a G3 Sub-Group.

Each Block of a G3 Sub-Group contains 128 bytes. These Blocks shall be numbered consecutively by Block Numbers in the range 1 to 336.

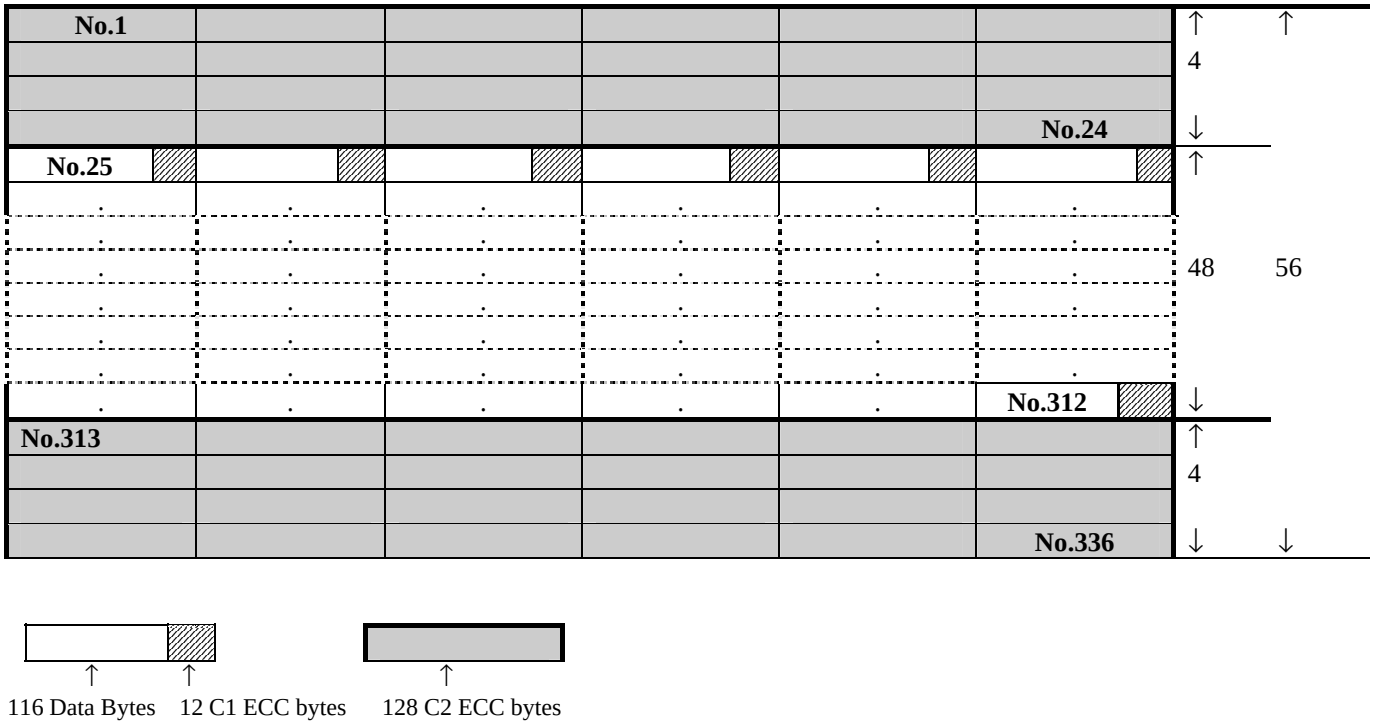

Figure 35 – G3 Sub-Groups

© ISO/IEC 2003 – All rights reserved
Copyright International Organization for Standardization
Provided by IHS under license with ISO
No reproduction or networking permitted without license from IHS
Not for Resale

11.4 Data Block

Each 128-byte Block shall be transformed into a 136-byte Data Block by the addition of a Header of 8 bytes preceding the 128 bytes of the block. The structure of the Header shall be as shown in figure 36.

	b8	b7	b6	b5	b4	b3	b2	b1
D1	Data Block Number (DBN)							
D2	DBN	ID Information						
D3	ID Information							
D4	ID Information							
D5	ID Information							
D6	ID Information							
D7	ID Information							
D8	ID Information							

Figure 36 - Structure of the Data Block Header

These ID bytes shall contain the following ID Information.

- Data Block Number
- Tape Length and Thickness ID
- Logical Frame ID
- Partition ID
- Area ID
- Repeat
- Position
- Group Count
- Separator 1 Count
- Separator 2 Count
- Record Count
- Absolute Frame Number
- ID Parity
- Overwrite Code
- Error Detecting Code for Basic Groups
- Error Detecting Code for G2 Sub-Groups
- Head ID

This ID Information shall be recorded as specified in 11.4.2.

11.4.1 ID information

11.4.1.1 Data Block Number (DBN)

This 9-bit field shall consist of the 8 bits of byte ID1 and of bit b8 of byte ID2 as the msb of this field. It shall specify the Data Block Number. The value of this number shall be in the range 0 to 335.

11.4.1.2 Tape Length and Thickness ID

This 8-bit field shall be set as follows.

Bits 8 and 7 shall be set to: 00 to indicate a tape thickness of 6,5 µm to 7,3 µm
01 to indicate a tape thickness of 5,0 µm to 5,5 µm

Bits 6 to 1 shall express in binary notation an integer *n* in the range 1 to 46, such that 5*n* specifies the length of the tape in metres.

11.4.1.3 Logical Frame ID (LFID)

This 8-bit field shall be set as follows.

Bit 8 This bit shall be set to ONE, if the Frame is the last of the Basic Group, else it shall be set to ZERO.

© ISO/IEC 2003 – All rights reserved

Copyright International Organization for Standardization
Provided by IHS under license with ISO
No reproduction or networking permitted without license from IHS
Not for Resale

Bit 7 This bit shall be set to ONE if the Frame is an ECC 3 Frame (see 16.5.3), else it shall be set to ZERO.

Bits 6 to 1 These bits shall be set to all ZEROs, if the Frame is an Amble Frame, else they shall express in binary notation the ordinal number *n* of the Data Frame, for *n*=1 to 20.

11.4.1.4 Partition ID

This 8-bit field shall specify in binary notation the ordinal number of the partition in the range 0 to 255.

11.4.1.5 Area ID

This 4-bit field shall specify the current area on the tape and thereby indicate the type of the current Frame. Other settings than those specified in figure 37 are prohibited by this International Standard.

Bit Positions				Definition
7	6	5	4	
0	0	0	0	Device Area
0	0	0	1	Reference Area
0	0	1	0	System Area
0	1	0	0	Data Area
0	1	0	1	EOD Area
0	1	1	1	Optional Device Area

Figure 37 - Area ID

11.4.1.6 Repeat

This 3-bit field shall specify the number of instances of a Basic Group.

000 shall indicate that there is only one instance of the Basic Group.
001 shall indicate that there are 2 instances of the Basic Group.
010 shall indicate that there are 3 instances of the Basic Group.
011 shall indicate that there are 4 instances of the Basic Group.
100 shall indicate that there are 5 instances of the Basic Group.
101 shall indicate that there are 6 instances of the Basic Group.
110 shall indicate that there are 7 instances of the Basic Group.
111 shall indicate that there are 8 instances of the Basic Group.

11.4.1.7 Position

This 3-bit field shall specify the ordinal position of the current recorded instance of this Basic Group in a sequence of contiguous recorded instances of this Basic Group, see figure 38.

Bit Positions			Definition
3	2	1	
0	0	0	The first instance of the Basic Group.
0	0	1	The 2nd instance of the Basic Group.
0	1	0	The 3rd instance of the Basic Group.
0	1	1	The 4th instance of the Basic Group.
1	0	0	The 5th instance of the Basic Group.
1	0	1	The 6th instance of the Basic Group.
1	1	0	The 7th instance of the Basic Group.
1	1	1	The 8th instance of the Basic Group.

Figure 38 - Position field

© ISO/IEC 2003 – All rights reserved
Copyright International Organization for Standardization
Provided by IHS under license with ISO
No reproduction or networking permitted without license from IHS
Not for Resale

11.4.1.8 Group Count

This 24-bit field shall specify the number of Basic Groups that have been written following the Vendor Group of the current partition, starting with 1 and including the current Basic Group. The Vendor Group shall have a Basic Group count of 0. When Repeat is used, the Group Count shall remain unchanged for each instance of a Basic Group.

11.4.1.9 Separator 1 Count

This 32-bit field shall specify the number of Separators 1 written since the beginning of the partition up to and including the current Basic Group. The first Separator 1 in the partition shall have a count of 1.

11.4.1.10 Separator 2 Count

This 32-bit field shall specify the number of Separators 2 that have been written since the beginning of the partition, up to and including the current Basic Group. The first Separator 2 in the partition shall have a count of 1.

11.4.1.11 Record Count

This 32-bit field shall specify the number of Records written since the beginning of the partition, including any complete Records in the current Basic Group. This number shall specify the Record Count (see 11.2.2) recorded in the Group Information Table.

11.4.1.12 Absolute Frame Number (AFN)

This 24-bit field shall specify the Absolute Frame Number of the current Frame. The first Frame of the Reference Area shall have AFN 1. Any discontinuous or repeated numbers shall only occur in an Amble Frame sequence (see 17.1), except in Intermediate Frames (see 16.5.5).

11.4.1.13 ID Parity

The ID Parity bytes shall be computed using an extended Reed-Solomon Code.

Calculation in a GF (2^8) shall be defined by:

$$G(x) = x^8 + x^4 + x^3 + x^2 + 1$$

A primitive element α in GF (2^8) is 00000010

The ID parity bytes shall satisfy:

$$Hs \times Vs = 0$$

$$Hs = \begin{bmatrix} 1 & 1 & 1 & 1 & 1 & 1 & 1 & 0 \\ \alpha^5 & \alpha^4 & \alpha^3 & \alpha^2 & \alpha^1 & 1 & 0 & 1 \end{bmatrix}$$

$$Vs = \begin{bmatrix} ID1 \\ ID2 \\ ID3 \\ ID4 \\ ID5 \\ ID6 \\ ID7 \\ ID8 \end{bmatrix}$$

11.4.1.14 Overwrite Code

The Overwrite Code shall be set either in the range 1 to 255 and shall not be identical with the last overwrite operation or to all ZEROs.

11.4.1.15 Error Detecting Code for Basic Groups

This Error Detecting Code shall be set for ECC Frames only. It shall consist of the two bytes resulting from the arithmetic addition byte-by-byte of all bytes of the Basic Group.

© ISO/IEC 2003 – All rights reserved

Copyright International Organization for Standardization
Provided by IHS under license with ISO
No reproduction or networking permitted without license from IHS
Not for Resale

11.4.1.16 Error Detecting Code for G2 Sub-Groups

The two EDC bytes shall be hardware –generated by shifting serially the bytes of the G2 Sub-Group.

$G(x) = x^{16} + x^{12} + x^5 + 1$

See annex M.

11.4.1.17 Head ID

The Head ID shall either specify the decimal values 1, 2 or 3 indicating the corresponding write head number or to the decimal value 0 indicating that the write head number is not specified.

11.4.2 Recording of the ID Information in the Data Block Headers

The 336 Data Blocks of a G3 Sub-Group shall be arranged in 21 sequences of 16 Data Blocks. The ID Information is laid out within theses 16 Data Blocks as specified in figure 39 for Data Blocks 1 to 16. The same layout is repeated in each sequence of 16 Data blocks.

Data Block 1	ID 1		Data Block Number
	ID2	bit 8	Data Block Number (msb)
		bit 7 to bit 4	Area ID
		bit 3	Set to ZERO
		bit 2 and bit 1	Head ID
	ID 3		AFN (LSB)
	ID 4		Overwrite Code
	ID 5		Set to ZEROs
	ID 6		Set to ZEROs
	ID 7		ID Parity
	ID 8		ID Parity
	DATA		128 bytes of Data
Data Block 2	ID 1		Data Block Number
	ID2	bit 8	Data Block Number (msb)
		bit 7 to bit 4	Area ID
		bit 3	Set to ZERO
		bit 2 and bit 1	Head ID
	ID3	bit 8	Set to ZERO
		bit 7 to bit 5	Repeats
		Bit 4	Set to ZERO
		bit 3 and bit 1	Positions
	ID 4		Set to ZEROs
	ID 5		Tape Length and Thickness ID (LSB)
	ID 6		Tape Length and Thickness ID (MSB)
	ID 7		ID Parity
	ID 8		ID Parity
	DATA		128 bytes of Data

Figure 39 - Allocation of ID Information (continued)

© ISO/IEC 2003 – All rights reserved
Copyright International Organization for Standardization
Provided by IHS under license with ISO
No reproduction or networking permitted without license from IHS
Not for Resale

Data Block 3	ID 1		Data Block Number
	ID2	bit 8	Data Block Number (msb)
		bit78 to bit 4	Area ID
		bit 3	Set to ZERO
		bit 2 and bit 1	Head ID
	ID 3		AFN (LSB)
	ID 4		Overwrite Code
	ID 5		Set to ZEROs
	ID 6		Set to ZEROs
	ID 7		ID Parity
	ID 8		ID Parity
	DATA		128 bytes of Data
Data Block 4	ID 1		Data Block Number
	ID2	bit 8	Data Block Number (msb)
		bit7 to bit 4	Area ID
		bit 3	Set to ZERO
		bit 2 and bit 1	Head ID
	ID 3		Separator 1 Count (LSB)
	ID 4		Separator 1 Count
	ID 5		Separator 1 Count
	ID 6		Separator 1 Count (MSB)
	ID 7		ID Parity
	ID 8		ID Parity
	DATA		128 bytes of Data
Data Block 5	ID 1		Data Block Number
	ID2	bit 8	Data Block Number (msb)
		bit7 to bit 4	Area ID
		bit 3	Set to ZERO
		bit 2 and bit 1	Head ID
	ID 3		AFN (LSB)
	ID 4		Overwrite Code
	ID 5		Set to ZEROs
	ID 6		Set to ZEROs
	ID 7		ID Parity
	ID 8		ID Parity
	DATA		128 bytes of Data

Figure 39 - Allocation of ID Information (continued)

© ISO/IEC 2003 – All rights reserved

Copyright International Organization for Standardization
Provided by IHS under license with ISO
No reproduction or networking permitted without license from IHS
Not for Resale

Data Block 6	ID 1		Data Block Number
	ID2	bit 8	Data Block Number (msb)
		bit 7 to bit 4	Area ID
		bit 3	Set to ZERO
		bit 2 and bit 1	Head ID
	ID 3		Separator 2 Count (LSB)
	ID 4		Separator 2 Count
	ID 5		Separator 2 Count
	ID 6		Separator 2 Count (MSB)
	ID 7		ID Parity
	ID 8		ID Parity
	DATA		128 bytes of Data
Data Block 7	ID 1		Data Block Number
	ID2	bit 8	Data Block Number (msb)
		bit 7 to bit 4	Area ID
		bit 3	Set to ZERO
		bit 2 and bit 1	Head ID
	ID 3		AFN (LSB)
	ID 4		Overwrite Code
	ID 5		Set to ZEROs
	ID 6		Set to ZEROs
	ID 7		ID Parity
	ID 8		ID Parity
	DATA		128 bytes of Data
Data Block 8	ID 1		Data Block Number
	ID 2	bit 8	Data Block Number (msb)
		bit 7 to bit 4	Area ID
		bit 3	Set to ZERO
		bit 2 and bit 1	Head ID
	ID 3		Record Count (LSB)
	ID 4		Record Count
	ID 5		Record Count
	ID 6		Record Count (MSB)
	ID 7		ID Parity
	ID 8		ID Parity
	DATA		128 bytes of Data

Figure 39 - Allocation of ID Information (continued)

© ISO/IEC 2003 – All rights reserved
Copyright International Organization for Standardization
Provided by IHS under license with ISO
No reproduction or networking permitted without license from IHS
Not for Resale

Data Block 9	ID 1		Data Block Number
	ID2	bit 8	Data Block Number (msb)
		bit 7 to bit 4	Area ID
		bit 3	Set to ZERO
		bit 2 and bit 1	Head ID
	ID 3		AFN (LSB)
	ID 4		Overwrite Code
	ID 5		Set to ZEROs
	ID 6		Set to ZEROs
	ID 7		ID Parity
	ID 8		ID Parity
	DATA		128 bytes of Data
Data Block 10	ID 1		Data Block Number
	ID2	bit 8	Data Block Number (msb)
		bit 7 to bit 4	Area ID
		bit 3	Set to ZERO
		bit 2 and bit 1	Head ID
	ID 3		Partition ID
	ID 4		Group Count (LSB)
	ID 5		Group Count
	ID 6		Group Count (MSB)
	ID 7		ID Parity
	ID 8		ID Parity
	DATA		128 bytes of Data
Data Block 11	ID 1		Data Block Number
	ID2	bit 8	Data Block Number (msb)
		bit 7 to bit 4	Area ID
		bit 3	Set to ZERO
		bit 2 and bit 1	Head ID
	ID 3		AFN (LSB)
	ID 4		Overwrite Code
	ID 5		Set to ZEROs
	ID 6		Set to ZEROs
	ID 7		ID Parity
	ID 8		ID Parity
	DATA		128 bytes of Data

Figure 39 - Allocation of ID Information (continued)

© ISO/IEC 2003 – All rights reserved

Copyright International Organization for Standardization
Provided by IHS under license with ISO
No reproduction or networking permitted without license from IHS
Not for Resale

Data Block 12	ID 1		Data Block Number
	ID2	bit 8	Data Block Number (msb)
		bit 7 to bit 4	Area ID
		bit 3	Set to ZERO
		bit 2 and bit 1	Head ID
	ID 3		LFID
	ID 4		AFN (LSB)
	ID 5		AFN
	ID 6		AFN (MSB)
	ID 7		ID Parity
	ID 8		ID Parity
	DATA		128 bytes of Data
Data Block 13	ID 1		Data Block Number
	ID2	bit 8	Data Block Number (msb)
		bit 7 to bit 4	Area ID
		bit 3	Set to ZERO
		bit 2 to bit 1	Head ID
	ID 3		AFN (LSB)
	ID 4		Overwrite Code
	ID 5		Set to ZEROs
	ID 6		Set to ZEROs
	ID 7		ID Parity
	ID 8		ID Parity
	DATA		128 bytes of Data
Data Block 14	ID 1		Data Block Number
	ID2	bit 8	Data Block Number (msb)
		bit 7 to bit 4	Area ID
		bit 3	Set to ZERO
		bit 2 and bit 1	Head ID
	ID 3		LFID
	ID 4		AFN (LSB)
	ID 5		AFN
	ID 6		AFN (MSB)
	ID 7		ID Parity
	ID 8		ID Parity
	DATA		128 bytes of Data

Figure 39 - Allocation of ID Information (continued)

--`,,,`-`-`,,`,,`,`,,`---

© ISO/IEC 2003 – All rights reserved
Copyright International Organization for Standardization
Provided by IHS under license with ISO
No reproduction or networking permitted without license from IHS
Not for Resale

Data Block 15	ID 1		Data Block Number
	ID2	bit 8	Data Block Number (msb)
		bit 7 to bit 4	Area ID
		bit 3	Set to ZERO
		bit 2 and bit 1	Head ID
	ID 3		AFN (LSB)
	ID 4		Overwrite Code
	ID 5		Error Detecting Code for Basic Group (LSB)
	ID 6		Error Detecting Code for Basic Group (MSB)
	ID 7		ID Parity
	ID 8		ID Parity
	DATA		128 bytes of Data
Data Block 16	ID 1		Data Block Number
	ID2	bit 8	Data Block Number (msb)
		bit 7 to bit 4	Area ID
		bit 3	Set to ZERO
		bit 2 and bit 1	Head ID
	ID 3		Error Detecting Code for Even G2 Sub-Group (LSB)
	ID 4		Error Detecting Code for Even G2 Sub-Group (MSB)
	ID 5		Error Detecting Code for Odd G2 Sub-Group (LSB)
	ID 6		Error Detecting Code for Odd G2 Sub-Group (MSB)
	ID 7		ID Parity
	ID 8		ID Parity
	DATA		128 bytes of Data

Figure 39 - Allocation of ID Information (concluded)

12 Method of recording

The method of recording shall be

– a ONE is represented by a positive residual magnetism,

– a ZERO is represented by a negative residual magnetism.

© ISO/IEC 2003 – All rights reserved

Copyright International Organization for Standardization
Provided by IHS under license with ISO
No reproduction or networking permitted without license from IHS
Not for Resale

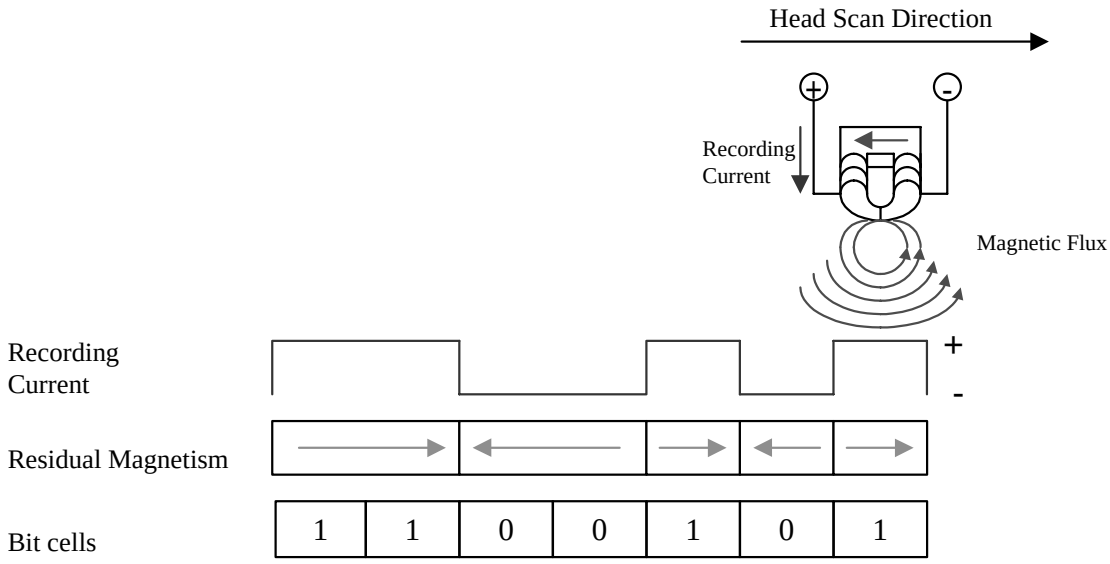

12.1 Physical recording density

The nominal maximum physical recording density is 6 872,9 ftpmm. The resulting nominal bit cell length is 0,145 5 µm. These values are derived from the track length (see 13.7) divided by the number of bits per track.

12.2 Long-term average bit cell length

The long-term average bit cell length for each track shall be measured over 64 Recorded Data Blocks. It shall be within 0,2 % of the nominal bit cell length.

12.3 Short-term average bit cell length

The short-term average bit cell length, referred to a particular bit cell, shall be the average of the preceding 40 bit cells. It shall be within 0,35 % of the long-term average bit cell length for the preceding track of the same azimuth.

12.4 Rate of change

The above defined short-term average bit cell length shall not change at a rate greater than 0,05 % per bit cell.

12.5 Bit shift

When measured according to annex E $(|A_{1110}| + |A_{0111}|)/(A_{0100} + A_{0010})$ shall be less than 0,05.

12.6 Read signal amplitude

The Average Signal Amplitude of an interchanged cartridge shall be at

– 763,7 ftpmm, 859,1 ftpmm, 981,8 ftpmm, 1 145,5 ftpmm, 1 374,6 ftpmm, 1 718,2 ftpmm, 2 291,0 ftpmm, 3 436,4 ftpmm and 4 581,9 ftpmm between 80 % and 140 % of the respective nominal recorded levels (see C.1).

12.7 Maximum recorded levels

Recorded signals shall be erasable by overwriting. The Maximum Allowable Recorded Levels specified in C.2 of annex C shall not be exceeded.

13 Track geometry

13.1 Track configuration

The helical track pattern is formed by the relationship between the direction of tape motion and the axis of rotation of a pair of heads, one of which has a positive azimuth angle and the other a negative azimuth angle. The direction of recording is away from the Tape Reference Edge. The track configuration is shown in figure 40.

© ISO/IEC 2003 – All rights reserved
Copyright International Organization for Standardization
Provided by IHS under license with ISO
No reproduction or networking permitted without license from IHS
Not for Resale

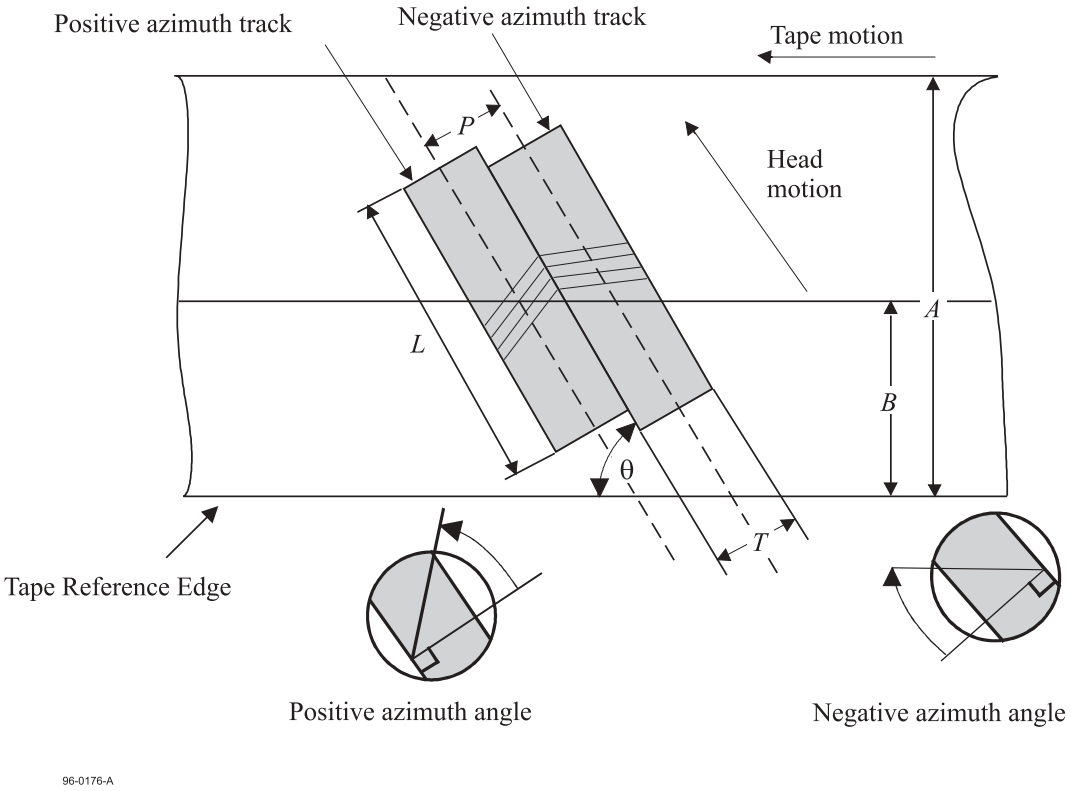

A	: Tape width	L	: Track length
B	: Ideal tape centreline	P	: Track pitch
θ	: Track angle	T	: Track width

Figure 40 - Track configuration (view on the recording surface)

13.2 Average track pitch

The average track pitch, taken over any group of 30 consecutive tracks, shall be 5,50 µm ± 0,20 µm. The track pitch at a non-seamless append point (see 16.5.6.2) shall not be included in this average.

13.3 Variations of the track pitch

The change of track pitch between successive track pitches shall not exceed 2,0 %, excluding the effect of an appending operation (see 16.5.6).

13.4 Track width

The nominal track width is 5,5 µm.
The measured track width shall be 5,5 µm ± 0,5 µm.
This requirement shall not apply at a non-seamless append point.

13.5 Track angle

The nominal angle of each track with respect to the Tape Reference Edge shall be 4,885 0°.

13.6 Track edge straightness

The leading edge of each track shall be straight when measured according to annex F.

13.7 Track length

The length of each track shall be 62,700 mm ± 0,050 mm.

13.8 Azimuth angles

The positive and the negative azimuth angles shall be 25°0'0" ± 0°15'0"

© ISO/IEC 2003 – All rights reserved

Copyright International Organization for Standardization
Provided by IHS under license with ISO
No reproduction or networking permitted without license from IHS
Not for Resale

14 Recorded patterns

Each Data Block consists of 136 8-bit bytes, viz. 128 data bytes and 8 Data Block Header bytes. These 8-bit bytes are grouped pair-wise into 68 16-bit bytes which are represented by 18-Channel bit patterns according to annex D.

14.1 Recorded Data Block

A recorded Data Block shall consist of 1 260 Channel bits representing the 68 16-bit bytes of a Main Data Block, each preceded by a 36-Channel bit Sync field having one of the following patterns

a,b) 111000000 000110011 111111100 000000011 Q = 0

c,d) 110000000 001110011 111111100 000000011 Q = 0

Pattern a) shall be used for Q' = 0
Pattern b) shall be used for Q' = 1
Pattern c) shall be used for Q' = 2
Pattern d) shall be used for Q' = 3
(See annex D)

15 Format of tracks

15.1 Track structure

Each track shall comprise 342 Blocks and consist of two Margin Zones and one Main Data Zone as shown in table 4 and figure 41.

Table 4 - Format of a track

Zone	Contents	Number of Blocks
Margin Zone 1	Margin Blocks	3
Main Data Zone 1	Recorded Data Blocks 1 to 336	336
Margin Zone 2	Margin Blocks	3

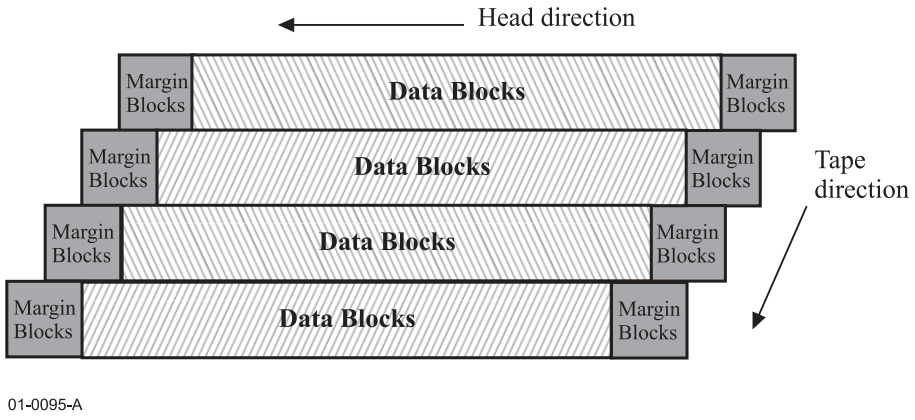

Figure 41 – Format of tracks

15.2 Positioning accuracy

The top of the 172nd Block of a track shall be at a distance of 4,460 mm ± 0,021 mm from the Tape Reference Edge. In addition the tops of the 172nd Blocks of any pair of adjacent tracks shall not differ by more than 7,8 µm. This is equivalent to 0,5 Block along the track at the centre of the track.

15.3 Tracking scheme

This format does not include any aids specially designed to assist a reading device in maintaining tracking. However the requirements of 15.2 limit the extent of the conditions that it must be handled correctly.

© ISO/IEC 2003 – All rights reserved
Copyright International Organization for Standardization
Provided by IHS under license with ISO
No reproduction or networking permitted without license from IHS
Not for Resale

15.4 Generation of Margin Blocks

Margin Blocks shall have a length of 1 260 Channel bits obtained from the output of the shift register shown in figure 42. The operation of this shift register shall be as shown in table 5.

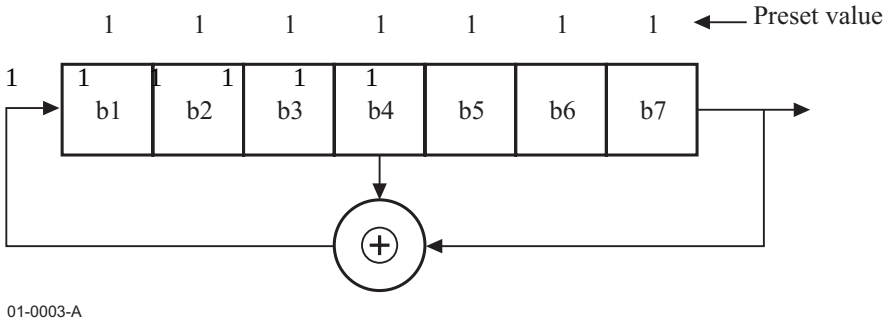

Figure 42 – Shift register for Margin Blocks

Table 5 – Channel bit generation

b1	b2	b3	b4	b5	b6	b7	
1	1	1	1	1	1	**1**	
0	1	1	1	1	1	**1**	
0	0	1	1	1	1	**1**	8 bits
0	0	0	1	1	1	**1**	
0	0	0	0	1	1	**1**	
1	0	0	0	1	0	**1**	
1	1	0	0	0	0	**1**	
1	1	1	0	0	0	**0**	
0	1	1	1	0	0	**0**	16 bits → 18 bits
1	0	1	1	1	0	**0**	
1	1	0	1	1	1	**0**	
1	1	1	0	1	1	**1**	8 bits
1	1	1	1	0	1	**1**	
0	1	1	1	1	0	**1**	
0	0	1	1	1	1	**0**	
1	0	0	1	1	1	**1**	

© ISO/IEC 2003 – All rights reserved
Copyright International Organization for Standardization
Provided by IHS under license with ISO
No reproduction or networking permitted without license from IHS
Not for Resale

The 1st line in this table is the starting setting of the shift register of figure 42. Bit b7 shall be the first bit of the source of the Margin Block. This starting setting is processed by the shift register, this processing yields the setting shown in the 2nd line of table 5, viz. 01111111, bit b7 shall be the 2nd bit of the source of Margin Block, and so on. The bit run is translated from 16-bit bytes into 18 Channel bit patterns.

16 Layout of the tape

The layout of the tape shall consist of a Device Area followed by up to 256 partitions. Each partition shall consist of

– the Reference Area
– the System Area
– the Data Area
– the EOD Area
– the Optional Device Area

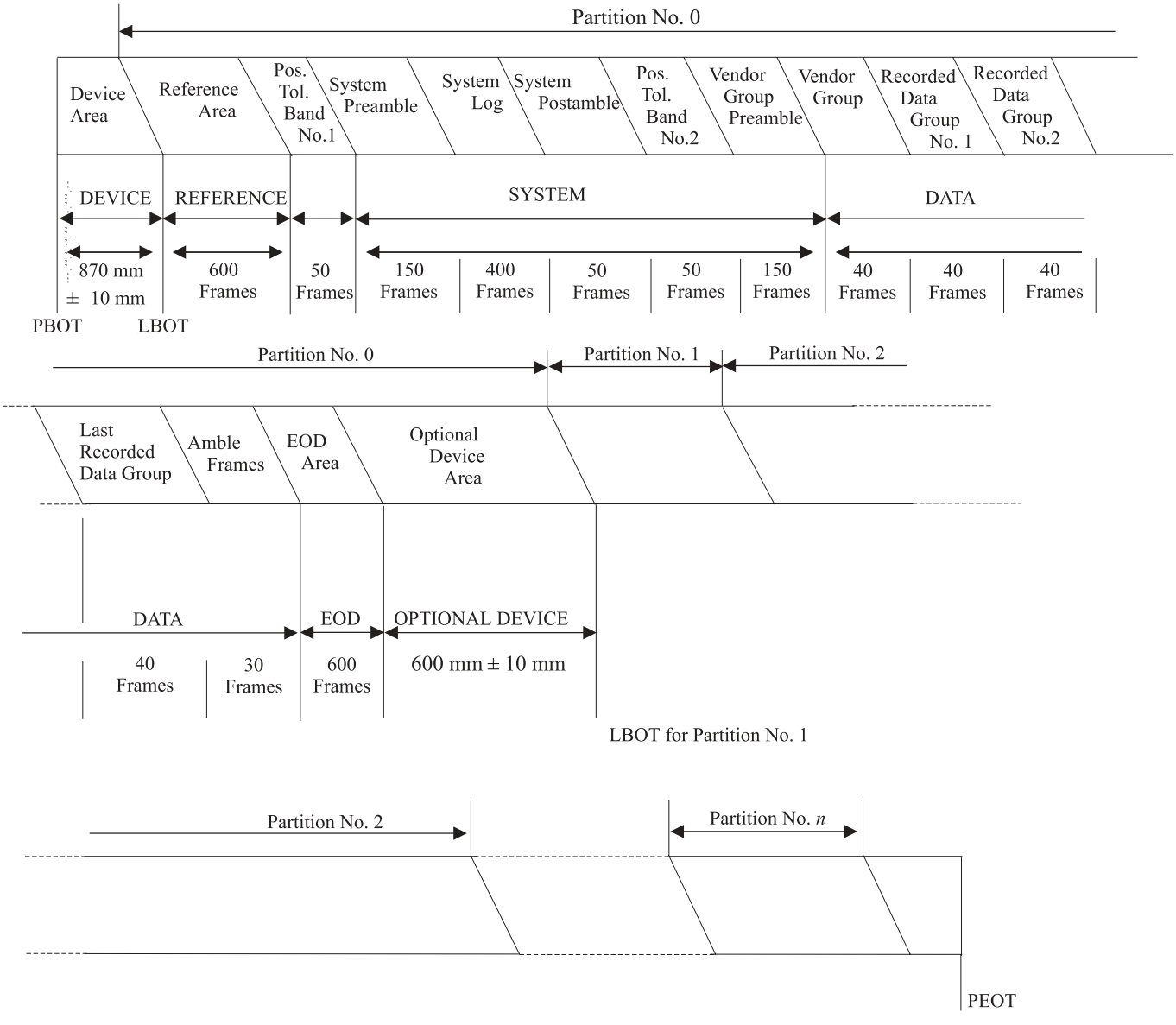

Figure 43 - Layout of the tape

16.1 Device Area

This area shall be the first area on the magnetic tape and shall extend from PBOT to LBOT. It shall not be used for writing data for interchange. Its length, measured parallel to the Tape Reference Edge, from PBOT to the first bit of the first block of

© ISO/IEC 2003 – All rights reserved
Copyright International Organization for Standardization
Provided by IHS under license with ISO
No reproduction or networking permitted without license from IHS
Not for Resale

the first recorded track of the Reference Area, shall be 870 mm ± 10 mm. It shall consist of three zones: a spin-up zone, a test zone and a guard zone.

The first zone of the Device Area is a spin-up zone. It is the part of the tape which is wrapped around the drum when the tape is loaded into the drive.

The spin-up zone shall be followed by a test zone available for read/write purposes. The contents of these two zones are not specified by this International Standard.

The test zone shall be followed by a guard zone of length 6,2 mm min. in which no recording is permitted.

16.2 Reference Area

This area shall consist of the Frames with AFN 1 to AFN 600, of which the first starts at LBOT and has AFN 1. The Reference Area is used as the physical reference when updating the System Log. The content of these Frames is not specified by this International Standard and shall be ignored in interchange.

16.3 Position Tolerance Band No. 1

This band shall have a nominal length equivalent to 50 Frames, from AFN 601 to AFN 650. It is used to accommodate the positioning tolerances when updating the System Log. Discontinuities and repetitions of the AFNs may occur in this band. The recorded signals may be ill-defined in this band. The content of these Frames is not specified by this International Standard and shall be ignored in interchange.

16.4 System Area

This area shall consist of the System Preamble, System Log, System Postamble, Position Tolerance Band No. 2, and the Vendor Group Preamble.

16.4.1 System Preamble

The System Preamble shall consist of 150 System Amble Frames with AFN 651 to AFN 800. Their content is not specified by this International Standard and shall be ignored in interchange.

16.4.2 System Log

The System Log shall be recorded in the AIT RMIC. It may be recorded also on the tape.

If the System Log is recorded also on the tape, there shall be 400 instances with AFN 801 to AFN 1 200 of the Frame shown in figure 44 recorded on the tape. In each partition 48 bytes shall be allocated to the Partition Information of the partition The Partition Information of each partition shall be recorded in the System Log of Partition 0. Figure 44 shows the System Log with Vendor Data information.

If the System Log is recorded in the AIT RMIC only, the content of these 400 Frames is not specified by this International Standard and shall be ignored in Interchange.

--`,,,`-`-`,,`,,`,`,,`---
© ISO/IEC 2003 – All rights reserved

Copyright International Organization for Standardization
Provided by IHS under license with ISO
No reproduction or networking permitted without license from IHS
Not for Resale

Byte Positions	Recorded Field	Number of Bytes		
1 to 48	Partition 0 Information	48	12 288	66 816
49 to 96	Partition 1 Information	48		
•	•	•		
•	•	•		
•	•	•		
12 241 to 12 288	Partition 255 Information	48		
12 289 to 12 360	Volume Information		72	
12 361 to 12 362	System Log Data Type Number		2	
12 363 to 33 408	System Log Vendor Data		21 046	
12 3409 to 33 456	Partition 0 Information	48	12 288	
33 457 to 33 504	Partition 1 Information	48		
•	•	•		
•	•	•		
•	•	•		
45 649 to 45 696	Partition 255 Information	48		
45 697 to 45 768	Volume Information		72	
25 769 to 45 770	System Log Data Type Number		2	
45 771 to 66 816	System Log Vendor Data		21 046	

Figure 44 - System Log with Vendor Data information

If the tape contains only one partition, the 12 240 bytes intended for the Partition 1 Information to Partition 255 Information shall be set to all ZEROs. If the tape contains more than one partition, then the Partition Information for the partition following the last partition defined shall be set to ZEROs.

© ISO/IEC 2003 – All rights reserved
Copyright International Organization for Standardization
Provided by IHS under license with ISO
No reproduction or networking permitted without license from IHS
Not for Resale

16.4.2.1 Partition Information

The Partition Information shall comprise the fields specified in figure 45.

Previous Groups Written			4 Bytes
Total Groups Written			4 Bytes
Set to all ZEROs			1 Byte
Previous Groups Read			3 Bytes
Total Groups Read			4 Bytes
Set to all ZEROs			1 Byte
Total Rewritten Frames			3 Bytes
Set to all ZEROs			1 Byte
Total 3rd ECC Count			3 Bytes
Access Count			4 Bytes
Update Replace Count			4 Bytes
Previous Rewritten Frames			2 Bytes
Previous 3rd ECC Count			2 Bytes
Set to all ZEROs			1 Byte
Load Count			3 Bytes
Set to all ZEROs			1 Byte
Last Valid Absolute Frame Number			3 Bytes
Flag Byte	Bit 1	Prevent Write	1 Byte
	Bit 2	Prevent Read	
	Bit 3	Prevent Write Retry	
	Bit 4	Prevent Read Retry	
	Bit 5	Set to ZERO	
	Bit 6	Set to ZERO	
	Bit 7	Set to ZERO	
	Bit 8	Partition is Opened	
Maximum Absolute Frame Number			3 Bytes

Figure 45 - Partition Information

Where the field of a Partition Information contain numerical values, these are recorded in binary notation in these fields.

16.4.2.1.1 Previous Groups Written

This field shall specify the number of Basic Groups physically written to the partition since the last update of the System Area.

16.4.2.1.2 Total Groups Written

This field shall specify the total number of Basic Groups physically written to the partition since the first time the partition was written.

16.4.2.1.3 Previous Groups Read

This field shall specify the number of Basic Groups physically read from the partition since the last update of the System Area.

16.4.2.1.4 Total Groups Read

This field shall specify the total number of Basic Groups physically read from the tape partition since the first time the partition was written. This number shall not include any read operation which is part of a Read-After-Write check. The number accumulates over the life of the tape unless a format pass is performed, in which case this field is re-set to the value 0.

16.4.2.1.5 Total Rewritten Frames

This field shall be the total number of Frames of the partition that have been rewritten since the partition was first written. It shall be incremented by 1 each time a Frame is repeated following error detection by the Read-After-Write process. This count shall not include any Frames which are written between the original Frame and its rewrite. The number accumulates over the life of the tape unless a format pass is performed, in which case this field is re-set to the value 0.

© ISO/IEC 2003 – All rights reserved

Copyright International Organization for Standardization
Provided by IHS under license with ISO
No reproduction or networking permitted without license from IHS
Not for Resale

16.4.2.1.6 Total 3rd ECC Count

This field shall specify the number of Basic Groups which have been physically read and data has not been recovered without requiring the use of C3 correction since the first time the partition was written. The number accumulates over the life of the tape unless a format pass is performed, in which case this field is re-set to the value 0.

16.4.2.1.7 Access Count

If used, this field shall specify the number of accesses to the partition. This field shall be set to all ZEROs if not used.

16.4.2.1.8 Update Replace Count

If used, this field shall specify the number of write operations to the partition. This field shall be set to all ZEROs if not used.

16.4.2.1.9 Previous Rewritten Frames

This field shall specify the number of Frames of the partition that have been rewritten since the last update of the System area. It shall be incremented by 1 each time a Frame is repeated following error detection by the Read-After-Write process. This count shall not include any Frames which are written between the original Frame and its rewrite.

16.4.2.1.10 Previous 3rd ECC Count

This field shall specify the number of Basic Groups which have been physically read and data has not been recovered without requiring the use of C3 correction since the last update of the System area.

16.4.2.1.11 Load Count

This field shall specify the number of times the tape has been loaded since the first time the tape was written. One load shall consist of threading the tape around the drum of the drive mechanism, positioning the tape ready for use and later unthreading the tape. The number accumulates over the life of the tape unless a format pass is performed, in which case this field is re-set to the value 0. This field shall be Reserved in the System Log of Partition 0 of a partitioned tape.

16.4.2.1.12 Last Valid Absolute Frame Number

This field shall specify the AFN of the last Frame containing valid data. The first Frame of the Reference Area shall have AFN 1.

16.4.2.1.13 Flag Byte

Bit 1 Prevent Write

If set to ZERO, write operation for the partition is enabled
If set to ONE, write operation for the partition is inhibited

Bit 2 Prevent Read

If set to ZERO, read operation for the partition is enabled
If set to ONE, read operation for the partition is inhibited

Bit 3 Prevent Write Retry

If set to ZERO, write-retry operation for the partition is enabled
If set to ONE, write-retry operation for the partition is inhibited

Bit 4 Prevent Read Retry

If set to ZERO, read-retry operation for the partition is enabled
If set to ONE, read-retry operation for the partition is inhibited

Bits 5 to 7 shall be set to ZERO.

Bit 8 Partition is Opened

Shall be set to ZERO, when all operations in the partition have been performed
Shall be set to ONE before a read and/or a write operation within the partition

© ISO/IEC 2003 – All rights reserved
Copyright International Organization for Standardization
Provided by IHS under license with ISO
No reproduction or networking permitted without license from IHS
Not for Resale

16.4.2.1.14 Maximum Absolute Frame Number

This field shall specify the AFN of the last Frame of the last EOD Area.

16.4.2.1.15 Reserved Field

Reserved Fields shall be set to all ZEROs.

16.4.2.2 Volume Information

This 72-byte field shall contain the information about the volume.

Field	Bytes	Description	
Reserved	3	Set to all ZERO	
Last read Partition Number	1	Last read Partition Number of the cartridge	
Last updated Partition Number	1	Last updated Partition Number of the cartridge	
Length and Thickness Numbers	1	Bit 1 to Bit 6	Tape Length Number
		Bit 7 and Bit 8	Tape Thickness Number
Flags	1	Bit 1	AIT Native Flag
		Bit 2	Load/Unload at PBOT
		Bit 3	System Log Location
		Bit 4	
		Bit 5	Set to ONE
		Bit 6	Set to ZERO
		Bit 7	Set to ZERO
		Bit 8	Set to ZERO
Last Partition Number	1	Last Partition Number of the cartridge	
Device Area Map	32	256 bits of Device Area Allocation Map	
Reserved	32	Set to all ZEROs	

Figure 46 - Volume Information

16.4.2.2.1 Last read Partition Number

This field shall specify the Partition Number of the partition last read.

16.4.2.2.2 Last updated Partition Number

This field shall specify the Partition Number of the partition last updated.

16.4.2.2.3 Length and Thickness Numbers

Bit 6 to bit 1 shall be set to the same value as that recorded by Bit 6 to Bit 1 of the Tape Length and Thickness ID byte (see 11.4.1.2).

Bit 8 and bit 7 when set to

00 Indicate Type A
01 Indicate Type B

Other settings of these bits are prohibited by this International Standard.

16.4.2.2.4 Flags

Bit 1 If set ZERO, the number of partitions shall be 2
If set to ONE, the maximum number of partitions is limited by the size of the RMIC

Bit 2 If set to ZERO and there is an Optional Device Area, load/unload shall be done at the Optional Device Area

© ISO/IEC 2003 – All rights reserved

Copyright International Organization for Standardization
Provided by IHS under license with ISO
No reproduction or networking permitted without license from IHS
Not for Resale

If set to ONE, load/unload shall be done at the PBOT

Bit 3 and bit 4 These bits shall indicate the location of the System Log

If set to 10, the System Log is recorded both on the tape and in the RMIC
If set to 11, the System Log is recorded in the RMIC only
If set to 11, the System Log is recorded in the MIC only

Bit 5 shall be set to ONE, indicating the presence of RMIC

Bit 6 to bit 8 shall be set to all ZEROs

Other settings of these bits are prohibited by this International Standard.

16.4.2.2.5 Last Partition Number

This is the last valid partition number on the tape.

16.4.2.2.6 Device Area Map

This is a bit allocation map of the Optional Device Area. There are 256 bits in the 32 bytes. A bit is assigned to each partition. If this bit is set to ONE then the partition contains an Optional Device Area.

16.4.2.3 System Log Vendor Data Type Number

This number shall be represented by two bytes.

When set to the value 0, the System Log Vendor Data shall be all ZEROs.
When set to the value 1, the System Log Vendor Data shall contain vendor-unique information.

16.4.3 System Postamble

The System Postamble shall consist of 50 System Amble Frames AFN 1 201 to AFN 1 250. Their content is not specified by this International Standard and shall be ignored in interchange.

Note - It is recommended that the continuum comprising the System Preamble, the System Log, the Vendor Data information and the System Postamble be written in a continuous motion when the System Log is updated.

16.4.4 Position Tolerance Band No. 2

This band shall have a nominal length equivalent to 50 Frames. The content of these Frames is not specified by this International Standard and shall be ignored in interchange.

16.4.5 Vendor Group Preamble

The Vendor Group Preamble shall consist of 150 Frames with AFN 1 301 to AFN 1 450. The Vendor Group Preamble shall immediately precede the Vendor Group and be contiguous with it. The content of these Frames is not specified by this International Standard and shall be ignored in interchange.

16.5 Data Area

This area shall consist of the Vendor Group and one or more Recorded Data Groups.

16.5.1 Vendor Group

A Vendor Group is the recorded instance of Basic Group No. 0, the content of which is not specified by this International Standard. The Vendor Group is formed from the bytes of that Basic Group by applying the operations described in clause 11 and recording the resulting Frames. The first of these Frames shall have AFN 1 451.

In addition none or either or both of two further operations, namely ECC3 and Repeated Frames may be applied.

No unrecorded space or physical discontinuity or seam or AFN discontinuity or repetition may occur within a Vendor Group.

16.5.2 Recorded Data Group

Each Recorded Data Group is a recorded instance of a Basic Group, and is formed from the data sent from a host computer by applying the operations described in clause 11 and recording the resulting Frames in the sequence of their Logical Frame Numbers.

In addition, none or either or both of two further operations may be applied. These are ECC3 and Repeated Frames. No unrecorded space or physical discontinuity or seam or AFN discontinuity or repetition may occur within a Recorded Data Group.

© ISO/IEC 2003 – All rights reserved
Copyright International Organization for Standardization
Provided by IHS under license with ISO
No reproduction or networking permitted without license from IHS
Not for Resale

16.5.3 ECC3

The Error Correction Code 3 has the capability of correcting any two tracks that are bad in a Recorded Data Group. The ECC3 data is derived from the 36 G1 Sub-Groups of the Basic Group to form a 37th, 38th, 39th and a 40th G1 Sub-Group. It shall use the following Reed-Solomon code:

$$GF(2^8)\ (20, 18, 3)$$

The calculation on $GF(2^8)$ shall be defined by the following polynomial:

$$G(x) = x^8 + x^4 + x^3 + x^2 + 1 \qquad \alpha = (00000010)$$

The interleave depth of ECC3 shall be one frame, the ECC bytes shall satisfy

$$H_R \times V_R = 0$$

The generator polynomial shall be

$$G_R(x) = \prod_{i=0}^{j=1} (x - \alpha^i)$$

$$H_R = \begin{vmatrix} 1 & 1 & 1 & 1 & \cdots & 1 & 1 & 1 \\ \alpha^{19} & \alpha^{18} & \alpha^{17} & \alpha^{16} & \cdots & \alpha^2 & \alpha^1 & \alpha^0 \end{vmatrix}$$

--`,,,`-`-`,,`,,`,`,,`---

© ISO/IEC 2003 – All rights reserved

Copyright International Organization for Standardization
Provided by IHS under license with ISO
No reproduction or networking permitted without license from IHS
Not for Resale

$$V_R = \begin{bmatrix} D_{n\times 2 + i\times 33408 + 0 + 0\times 66816} \\ D_{n\times 2 + i\times 33408 + 1 + 0\times 66816} \\ D_{n\times 2 + i\times 33408 + 0 + 1\times 66816} \\ D_{n\times 2 + i\times 33408 + 1 + 1\times 66816} \\ D_{n\times 2 + i\times 33408 + 0 + 2\times 66816} \\ D_{n\times 2 + i\times 33408 + 1 + 2\times 66816} \\ D_{n\times 2 + i\times 33408 + 0 + 3\times 66816} \\ D_{n\times 2 + i\times 33408 + 1 + 3\times 66816} \\ D_{n\times 2 + i\times 33408 + 0 + 4\times 66816} \\ D_{n\times 2 + i\times 33408 + 1 + 4\times 66816} \\ D_{n\times 2 + i\times 33408 + 0 + 5\times 66816} \\ D_{n\times 2 + i\times 33408 + 1 + 5\times 66816} \\ D_{n\times 2 + i\times 33408 + 0 + 6\times 66816} \\ D_{n\times 2 + i\times 33408 + 1 + 6\times 66816} \\ \\ \cdot \\ \cdot \\ D_{n\times 2 + i\times 33408 + 1 + 18\times 66816} \\ P_{n\times 2 + i\times 33408 + 0 + 19\times 66816} \\ Q_{n\times 2 + i\times 33408 + 1 + 19\times 66816} \end{bmatrix}$$

n = 0, 1, 2, ..., 33 407

i = 0, 1,2,3

D_n = User data byte number

P_n = Parity byte number

Q_n = Parity byte number

16.5.4 Multiple Recorded Instances

Each Basic Group, other than Basic Group No. 0, may be recorded in a sequence of contiguous instances. The maximum number of such instances shall be 8. Within a sequence of Recorded Data Groups which are derived from the same Basic Group the values of Logical Frame ID, Position and AFN will be different. There will also be differences in the values of the Parity bytes computed from these. There may also be differences in the number of Repeated Frames per Recorded Data Group in such a sequence.

16.5.5 Repeated Frames

In the Data Area, a Frame within a Recorded Data Group may be repeated by rewriting it further along the tape. The repeated Frame may be written after zero, one, two, three, four, five, six or seven other Frames have been written. Each such sequence (i.e. the original or repeated Frame and the zero, one, two, three, four, five, six or seven following Frames) can be repeated multiple times, e.g. to allow skipping over bad areas on the tape. The maximum number of instances of a sequence shall be 256, i.e. the original and up to 255 repetitions.

Intermediate Frames, i.e. those Frames written between the original Frame and its next occurrence shall start with the Frame the Logical Frame Number of which is the next in the normal sequence, and shall follow the correct sequence thereafter. The correct sequence requires successive Frames to have Logical Frame Numbers which increment by one until the last Frame in the Recorded Data Group, or the ECC3 Frames if present, after which they restart from 0 (for an Amble Frame) or one (for the first Frame of the next Recorded Data Group). Amble Frames are allowed in this sequence, provided the limit of seven Intermediate Frames is not exceeded. The final occurrence of the repeated Frame shall be followed by the Intermediate Frames written in the correct sequence. Discontinuities or repeated AFNs shall not occur.

--`,,,`-`-`,,`,,`,`,,`---
© ISO/IEC 2003 – All rights reserved
Copyright International Organization for Standardization
Provided by IHS under license with ISO
No reproduction or networking permitted without license from IHS
Not for Resale

16.5.6 Appending and overwriting

When new data is appended to data already recorded on tape, or existing data is overwritten by new data, the point at which recording may start shall be referenced to the last Frame (Frame A in figure 47) of a Recorded Data Group. If Multiple Recorded Instances of the last group exist, the relevant Recorded Data Group is the last in the sequence. If Repeated Frames have been recorded, the relevant Frame is the last repetition of the last Frame. The smallest unit of appending or overwriting is a Recorded Data Group.

Note - After overwriting commences, all data between the current recording point and PEOT is logically inaccessible.

The rules for appending and overwriting are identical. For simplicity, the following description refers only to appending.

Data may be appended to the tape by either the seamless or non-seamless methods. An appending operation may be described as seamless only if the appended tracks are placed so as to form a continuous sequence with the previous tracks. No track shall be partially overwritten to the point of being unreadable nor shall any gaps be left between tracks.

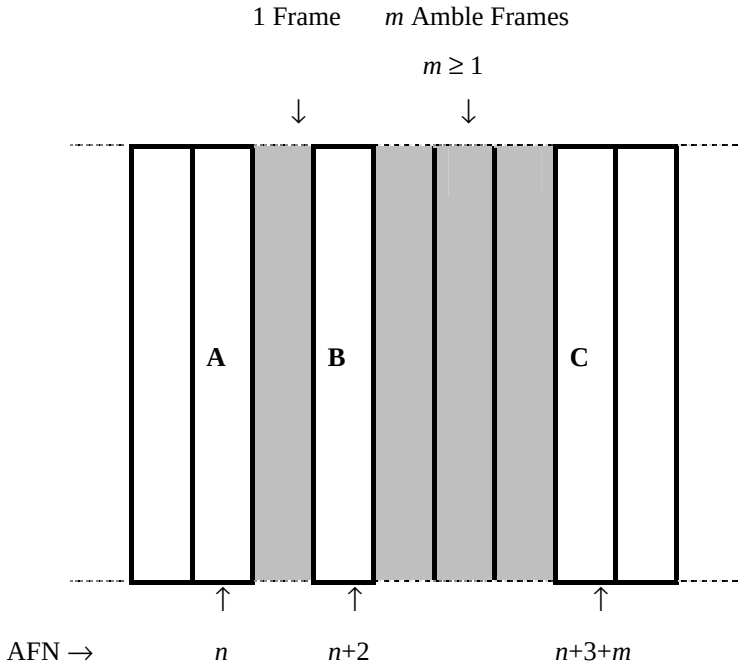

Figure 47 - Appending rules

The Frames up to, and including, Frame A on figure 47 contain information which is to be retained. The append starts with Amble Frames at Frame B and the information at Frame C.

16.5.6.1 Seamless appending rules

Rule 1. There shall be one Frame between Frame A and Frame B, i.e. if Frame A has AFN *n*, then Frame B shall have AFN *n*+2.

Rule 2. The Frame written between Frames A and B shall be contiguous with Frame A, i.e. no unrecorded space between A and B is permitted, nor is any discontinuity or repetition of AFNs, nor is any physical discontinuity. The Group Number of this Frame shall be greater than that of Frame A, unless this Frame is an Amble Frame, in which case its Group Number shall be equal to that of Frame A. The content of this Frame shall be ignored.

Rule 3. There shall be a minimum of one Amble Frame between Frames B and C, i.e. if Frame B has AFN *n*+2, then Frame C shall have AFN *n*+4 minimum. No unrecorded space, physical discontinuity, or AFN discontinuity or repetition is allowed between Frames B and C.

Rule 4. The position of the first track of Frame B (AFN *n*+2), as measured along the length of the tape at the point shown in figure 48, shall be at a distance of $x = 257{,}8\ \mu m \pm 42{,}9\ \mu m$ from the first track of the Frame with AFN *n*+1.

© ISO/IEC 2003 – All rights reserved

Copyright International Organization for Standardization
Provided by IHS under license with ISO
No reproduction or networking permitted without license from IHS
Not for Resale

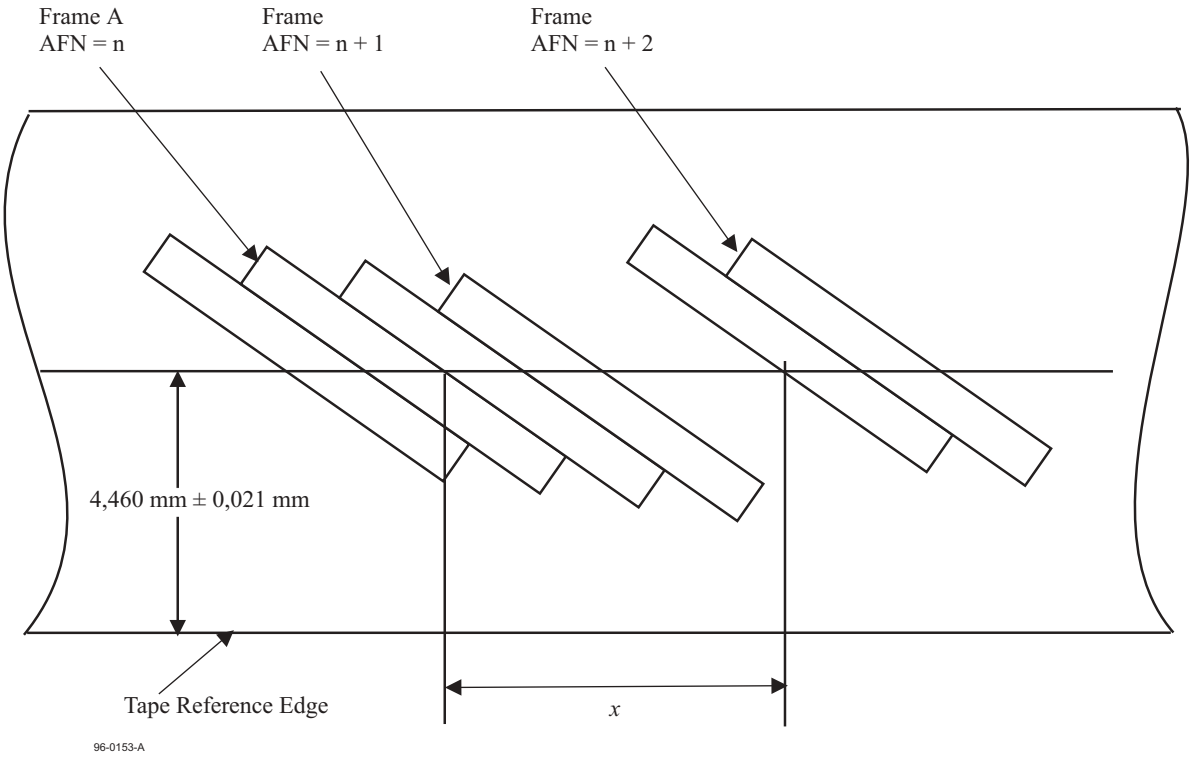

Figure 48 - Tolerance on seamless appending

16.5.6.2 Non-seamless appending rules

Rule 1. The distance between Frame A and Frame B shall be sufficient for a minimum of 1 and a maximum of 11 Frames. No unrecorded space shall be permitted between Frame A and Frame B. One or more Frames between Frame A and Frame B may be ill-defined, e.g., as a result of partial overwriting at an append point.

Rule 2. Discontinuities and repetitions of AFN are permitted between Frame A and Frame B, provided that, where Frame A has AFN *n*,

– all Frames have an AFN greater than *n*, and
– Frame B has AFN *n*+2 min. and AFN *n*+12 max.

Rule 3. Amble Frames between Frame A and Frame B shall have a value of Group Number which is equal to that of Frame A. Other Frames between Frame A and Frame B shall have a value of Group Number which is greater than that of Frame A.

Rule 4. There shall be a minimum of 29 Frames between Frames B and C, i.e. if Frame B has AFN *n*', where $n+2 \leq n' \leq n+12$, then Frame C shall have AFN *n*'+30 minimum. No unrecorded space, physical discontinuity or seam or AFN discontinuity or repetition shall be allowed between Frames B and C.

16.6 EOD Area

The Data Area shall be followed by an EOD Area.

In the last partition, it shall consist of a minimum of 600 Amble Frames, and shall start after the last Amble Frame in the sequence of Amble Frames which follows the last Recorded Data Group. The first Frame of the EOD Area shall be recorded at least 5 000 mm before PEOT.

More than one EOD Area may exist on the tape. More than one EOD Area may exist on a Partition. The EOD Area closest to LBOT in a partition shall be the only one valid for information interchange.

In all partitions, if the length of tape between the last Amble Frame and LEOT is greater than, or equal to, 600 Frames, the EOD Area shall consist of at least 600 Frames. If the length of tape between the last Amble Frame and LEOT is less than 600 Frames, the length of the EOD Area shall be equal to that length.

16.7 Optional Device Area

The EOD Area may be followed by an Optional Device Area which extends up to the Partition Boundary or PEOT. The contents of this Optional Device Area are not defined for interchange.

© ISO/IEC 2003 – All rights reserved
Copyright International Organization for Standardization
Provided by IHS under license with ISO
No reproduction or networking permitted without license from IHS
Not for Resale

16.8 Logical End Of Tape (LEOT)

The LEOT shall be a point at the beginning of EOD.

16.9 Logical Beginning of Tape (LBOT)

The LBOT is the Partition Boundary. The first Frame after this point shall have the AFN 1.

16.10 Early Warning Point - EWP

For a new or bulk-erased tape the position of the EWP is calculated by the drive writing the tape. The calculation shall ensure that the EWP is not less than 5 258 mm before PEOT. Until data is recorded beyond the calculated EWP no indication of its position is recorded on the tape. When data is first recorded beyond the calculated EWP, the setting of the AEWP bit changes from ZERO to ONE in the last Basic Group which is completely or partially recorded before that point. This changeover then denotes the position of the EWP when the tape is subsequently read.

For the last partition containing data which is being overwritten or appended, if the point at which overwriting commenced is before the EWP as defined prior to the commencement of overwriting, a new position of the EWP shall be calculated by the drive currently writing the tape. The calculation shall ensure that the EWP is not less than 5 258 mm before PEOT. When data is recorded beyond this calculated EWP, the setting of the AEWP bit changes from ZERO to ONE in the last Basic Group which is completely or partially recorded before that point. This changeover then denotes the position of the EWP when the tape is subsequently read.

For the last partition containing data which is being overwritten or appended, if the AEWP bit changes from ZERO to ONE prior to the point at which overwriting commenced, the position of the EWP shall be denoted by that changeover, i.e. the AEWP bit shall be set to ONE in all overwriting groups.

Within an empty partition the position of the EWP is calculated by the drive writing the tape. The calculation shall ensure that the EWP is not less than 1 000 Frames before the LEOT. Until data is recorded beyond the calculated EWP, no indication of its position is recorded on the tape. When data is first recorded beyond the calculated EWP, the setting of the AEWP bit changes from ZERO to ONE in the Basic Group.

EWP when the tape is subsequently read.

For partitions, except for the last partition, containing data which is being overwritten, if the point at which overwriting commenced is before the EWP defined before the commencement of overwriting, a new position of the EWP shall be calculated by the drive currently writing the tape. The calculation shall ensure that this calculated EWP is not less than 1 000 Frames before the LEOT. When data is recorded beyond this calculated EWP, the setting of the AEWP bit changes from ZERO to ONE in the Basic Group which is completely or partly recorded before that point. This changeover then denotes the position of the EWP when the tape is subsequently read.

For partitions, except the last one, containing data which is being overwritten, if the AEWP bit changes from ZERO to ONE prior to the point at which overwriting commenced, the position of the EWP is denoted by that changeover, i.e. the AEWP bit is set to ONE in all overwritten Basic Groups in this partition.

16.11 Empty Partition

An empty partition shall contain :

- a Reference Area
- a System Area
- a Data Area comprising a Vendor Group and at least 30 Amble Frames
- a minimum of 600 Frames identical with those of the EOD Area of a partition

The Vendor Group Preamble, the Data Area and the following Amble Frames shall form a continuum which shall extend to the Partition Boundary or PEOT and in which no unrecorded space, physical discontinuity or seam or AFN discontinuity or repetition shall occur.

16.12 Initialization

Initialization is a procedure which shall be carried out before the first use of a tape cartridge for recording user data (it may be also used at other times). The procedure ensures that there shall be no unrecorded space between LBOT and the end of the Vendor Group. The extent from LBOT to the end of the Vendor Group shall be written as a continuum in which the Position Tolerance Bands No. 1 and No. 2 shall have each a nominal number of Frames of 50. The Frames in the Position Tolerance Band No. 1 shall have their Area ID set to the Reference Area ID.

© ISO/IEC 2003 – All rights reserved

Copyright International Organization for Standardization
Provided by IHS under license with ISO
No reproduction or networking permitted without license from IHS
Not for Resale

If an initialization is performed on a recorded tape, it will destroy all data thereon, including the history data in the Volume Information and Partition Information.

Note - The tape layout is such that a separate initialization on a new or bulk-erased tape is not necessary prior to the recording of the first Recorded Data Group. The Reference Area, System Area and Vendor Group can be recorded at a time immediately prior to the recording of the first Recorded Data Group.

17 Housekeeping Frames

Housekeeping Frames shall not contain any user data or separators. Data shall be recorded only in the ID Information (see 11.4.1), this data being dependent on the area of the magnetic tape where the Housekeeping Frame is recorded. The content of Housekeeping Frames is not specified by this International Standard.

There are two types of Housekeeping Frames, namely Amble Frames and System Amble Frames.

17.1 Amble Frames

Amble Frames shall be permitted only in the Data Area. Their Logical Frame Number shall be 0.

Amble Frames shall not be permitted within a Recorded Data Group, except within a run of Intermediate Frames, and are not permitted before the Vendor Group.

An Amble Frame shall be preceded either by another Amble Frame or by the last Frame of a Recorded Data Group, except at an append point.

The content of these Frames is not specified by this International Standard and shall be ignored in interchange.

17.2 System Amble Frames

System Amble Frames shall be recorded within the System Area; their Absolute Frame Numbers in the range 651 to 800 and 1 201 to 1 250.

The content of these Frames is not specified by this International Standard and shall be ignored in interchange.

18 AIT Remote Memory In Cartridge (AIT RMIC)

18.1 General

The AIT Remote Memory In Cartridge (AIT RMIC) transponder is built into the case. A contactless interface enables a controller to communicate with this transponder.

The AIT RMIC transponder contains a serial EEPROM the size of which shall be 65 536 bits (8 192 bytes). It is organized into 512 blocks of 16 bytes each. These 16 bytes constitute writeable units of 128 bits.

18.2 Content of the AIT RMIC

There shall be a number of distinct data sections within the AIT RMIC, as shown in table 6. Sections have been arranged to align on 16-byte boundaries. All unused bits in the AIT RMIC shall be set to ZERO. For an initialized cartridge, the read-only section shall be protected from re-programming.

Table 6 – AIT RMIC Data Fields

Section	Access
AIT RMIC Manufacturer's Information	Read Only
Communication Information	Read Write
Mechanism Log Information	
Memory Management Information	
Volume Information	
Memory Heap 2	
Memory Heap 1	

© ISO/IEC 2003 – All rights reserved
Copyright International Organization for Standardization
Provided by IHS under license with ISO
No reproduction or networking permitted without license from IHS
Not for Resale

18.2.1 Manufacturer's Information Section

This section shall consist of 208 bytes. It shall be required for interchange for both an initialised and non initialised cartridge. The definitions of "non initialised" and "initialised" cartridges are given in the Memory Management Information Section.

The AIT RMIC Manufacturer's Information shall start at address 0 in the AIT RMIC.

Table 7 – AIT RMIC Manufacturer's Information (continued)

Field	Offset	Number of Bytes	Description
Checksum	0	1	Exclusive OR operation of offset 1 to 93.
RMIC Type	1	1	Shall be set to (25)
RMIC Manufactured Date	2	4	This field shall be set either to all (00), indicating that it is not used, or to the date the RMIC was manufactured, expressed as YYMMDDHH in BCD. Example: 12th March 2001,14:30 : [01] [03] [12] [14]
RMIC Manufacturer Line Name	6	8	The content of this field is not specified by this International Standard and shall be ignored in interchange.
RMIC Manufacturer Plant Name	14	8	The content of this field is not specified by this International Standard and shall be ignored in interchange.
RMIC Manufacturer Name	22	8	The content of this field is not specified by this International Standard and shall be ignored in interchange.
RMIC Name	30	8	The content of this field is not specified by this International Standard and shall be ignored in interchange.

© ISO/IEC 2003 – All rights reserved

Copyright International Organization for Standardization
Provided by IHS under license with ISO
No reproduction or networking permitted without license from IHS
Not for Resale

Table 7 – AIT RMIC Manufacturer's Information (continued)

Cartridge Manufactured Date	38	4	This field shall be set either to all (00), indicating that it is not used, or to the date the RMIC was manufactured, expressed as YYMMDDHH in BCD. Example: 15th May 2001,19:30 : [01] [05] [15] [19]	
Cartridge Manufacturer Line Name	42	8	The content of this field is not specified by this International Standard and shall be ignored in interchange.	
Cartridge Manufacturer Plant Name	50	8	The content of this field is not specified by this International Standard and shall be ignored in interchange.	
Cartridge Manufacturer Name	58	8	The content of this field is not specified by this International Standard and shall be ignored in interchange.	
Cartridge Name	66	8	The content of this field is not specified by this International Standard and shall be ignored in interchange.	
Vendor Name	74	8	The content of this field is not specified by this International Standard. In information interchanged, it requires agreement between the interchanging parties.	
PAD	82	1	The content of this field is not specified by this International Standard and shall be ignored in interchange.	
Length and Thickness Numbers	83	1	Bit1 to Bit 6	Tape Length Number
			Bit7 and Bit 8	Tape Thickness Number
Maximum Clock Frequency	84	2	Shall be set to (00)(64)	
Block Size	86	1	Shall be set to (10).	
RMIC Capacity	87	1	Shall be set to (0D).	
Manufacturer’s Information Offset	88	2	Shall both be set to (00).	
Size of Manufacturer’s Information Section	90	2	Shall be set to (00)(0D)	
Manufacturer’s Information Section rewrite count	92	1	Start from 0. Only for Manufacturer.	

© ISO/IEC 2003 – All rights reserved
Copyright International Organization for Standardization
Provided by IHS under license with ISO
No reproduction or networking permitted without license from IHS
Not for Resale

Table 7 – AIT RMIC Manufacturer's Information (concluded)

Application ID	93	1	General purpose = (00) Cleaning Cartridge = (60) WORM = (80) Other settings are prohibited by this International Standard.
PAD	94	66	The content of this field is not specified by this International Standard and shall be ignored in interchange.
Checksum	112	1	Exclusive OR operation of offset 113 to 159.
Primary Lot Number	113	26	The content of this field is not specified by this International Standard and shall be ignored in interchange.
Secondary Lot Number	139	4	The content of this field is not specified by this International Standard and shall be ignored in interchange.
Media Type	143	1	General purpose = (00) Cleaning Cartridge = (01) WORM = (80) Other settings are prohibited by this International Standard.
Media Type Information	144	2	If Media Type is (01) then set the maximum number of cleaning cycles permitted, else set to ZEROs.
PAD	146	2	The content of this field is not specified by this International Standard and shall be ignored in interchange.
Initial Offset of Heap 2	148	2	See 18.3
Initial Offset of Heap 1	150	2	See 18.3
PAD	152	8	The content of this field is not specified by this International Standard and shall be ignored in interchange.
Cartridge Serial Number	160	32	The Cartridge Serial Number shall consist of 32 characters from the 7-bit Coded Character Set of Standard ECMA-6.The first digit shall be set to address offset 160. (See below the Example of coding a Cartridge Serial Number).
PAD	192	1	The content of this field is not specified by this International Standard and shall be ignored in interchange.
Secondary ID	193	1	See one of the characters listed in table 7 a
Checksum	194	1	Exclusive OR operation of offset 160 to 193.
CRC	195	2	CRC operation of offset 160 to 191.
PAD	197	11	The content of this field is not specified by this International Standard and shall be ignored in interchange.

--`,,`-`-`,,`,,`,`,,`---

© ISO/IEC 2003 – All rights reserved

Copyright International Organization for Standardization
Provided by IHS under license with ISO
No reproduction or networking permitted without license from IHS
Not for Resale

Example of coding a Cartridge Serial Number

If this number is for example:17933305086687250501304321014432. It will be represented by :

(31)(37)(39)(33)(33)(33)(30)(35)(30)(38)(36)(36)(38)(37)(32)(35)(30)(35)(30)(31)(33)(30)(34)(33) (32)(31)(30)(31)(34)(34)(33)(32)

Table 7 a – Secondary ID

ECMA-6	Representation	Specification
1	(31)	15 m, the serial number shall not exceed a 6-digit number
2	(32)	70 m, the serial number shall not exceed a 6-digit number
3	(33)	170 m, the serial number shall not exceed a 6-digit number
4	(34)	230 m, the serial number shall not exceed a 6-digit number
W	(57)	230 m, the serial number shall not be less than a 7-digit number
X	(58)	170 m, the serial number shall not be less than a 7-digit number
Y	(59)	70 m, the serial number shall not be less than a 7-digit number
Z	(5A)	15 m, the serial number shall not be less than a 7-digit number
Other settings are prohibited by this International Standard		

18.2.2 Communication Information Section

Table 8 – Communication Information

Field	Offset	Bytes	Description
Checksum	208	1	Exclusive OR operation of offset 209 to 223.
Session ID	209	1	See 18.12.3.
Communication Information	210	14	The content of this field is not specified by this International Standard and shall be ignored in interchange.

18.2.3 Mechanism Error Log Information Section

Table 9 – Mechanism Error Log Information

Field	Offset	Bytes	Description
Mechanism Error Log Information	224	32	The content of this field is not specified by this International Standard and shall be ignored in interchange.
The last drive history information	256	12	8 bytes of vendor name and drive serial number
The one time before the last drive history information	268	12	8 bytes of vendor name and drive serial number
The two times before the last drive history information	280	12	8 bytes of vendor name and drive serial number
The three times before the last drive history information	292	12	8 bytes of vendor name and drive serial number

© ISO/IEC 2003 – All rights reserved
Copyright International Organization for Standardization
Provided by IHS under license with ISO
No reproduction or networking permitted without license from IHS
Not for Resale

18.2.4 Memory Management Information Section

Table 10 – Memory Management Information (continued)

Field	Offset	Bytes	Description	
Checksum	304	1	Exclusive OR operation of offset 305 to 335.	
AIT RMIC Logical Format Type	305	1	Shall be set to (14) prior to first use. Shall be set to (15) by the writing drive.	
Offset of Physical Tape Directory Information	306	2	Shall both be set to (00) by the manufacturer. See 18.3.4	
Offset of User Volume Information Cell	308	2	Shall both be set to (00) by the manufacturer. See 18.3.5	
Offset of User Partition Information Cell	310	2	Shall both be set to (00) by the manufacturer. See 18.3.6	
Offset of the 1st Partition Information Cell	312	2	Shall both be set to (00) by the manufacturer. See 18.3.3.	
PAD	314	1	Shall be set to (00)	
Volume Logical Attribute	315	1	Bit1	Prevent Write Set to ONE= prevent Set to ZERO = allowed
			Bit2	Prevent Read Set to ONE = prevent Set to ZERO = allowed
			Bit3	Prevent Write Retry Set to ONE = prevent Set to ZERO = allowed
			Bit4	Prevent Write Retry. Set to ONE= prevent Set to ZERO = allowed
			Bit5	Set to ONE
			Bit6	Set to ZERO
			Bit7	Set to ZERO
			Bit8	Set to ZERO
Offset of Heap 1 top	316	2	Shall be set to 1312 by the manufacturer.	
Offset of Heap 1 bottom	318	2	Shall be set to 8191 by the manufacturer.	
Offset of Application Information Cell	320	2	Shall be both set to (00) by the manufacturer. See 18.3.7.	

© ISO/IEC 2003 – All rights reserved
Copyright International Organization for Standardization
Provided by IHS under license with ISO
No reproduction or networking permitted without license from IHS
Not for Resale

Table 10 – Memory Management Information (concluded)

Offset of Tape Alert Information Cell	322	2	Shall be both set to (00)) by the manufacturer.
PAD	324	8	All set to (00).
Offset of Heap 2 top	332	2	Shall be set to 512 by the manufacturer.
Offset of Heap 2 bottom	334	2	Shall be set to 1311 by the manufacturer.

18.2.5 Volume Information Section

Table 11 - Volume Information (continued)

Field	Offset	Bytes	Description		
Checksum	336	1	Exclusive OR operation of offset 337 to 436.		
Unloaded Position	337	20	Offset	Bytes	
			321	1	Pad
			322	3	AFN
			325	1	Partition ID
			326	3	Basic Group Count
			329	4	Record Count
			333	4	Separator 2 Count
			337	4	Separator 1 Count
Reel Diameter at the Unloaded Position	357	4	Offset	Bytes	
			341	1	Supply side i.e. left-hand-side of the decimal point. Range is 0 to 99. Unit is cm.
			342	1	Supply side i.e. right-hand-side of the decimal point. Range is 0 to 99. Unit is cm.
			343	1	Take up side i.e. left-hand-side of the decimal point. Range is 0 to 99. Unit is cm.
			344	1	Supply side i.e. right-hand-side of the decimal point. Range is 0 to 99. Unit is cm.

© ISO/IEC 2003 – All rights reserved
Copyright International Organization for Standardization
Provided by IHS under license with ISO
No reproduction or networking permitted without license from IHS
Not for Resale

Table 11 - Volume Information (concluded)

	361	1	The content of this field is not specified by this International Standard and shall be ignored in interchange.
Initialized Count	362	3	Shall be set to the value 0 by the manufacturer. If the cartridge is initialised, then increment by 1 for each initialisation.
Volume Information	365	72	See figure 4 – Volume Information
PAD	437	11	Shall be set to (00)

18.2.6 Volume Use History Information Section

Table 12 – Volume Use History Information

Field	Offset	Bytes	Description
Checksum	448	1	Exclusive OR operation of offset 449 to 504.
Accumulative Partition Log Information	449	56	Sum all Partition information See figure 45 – Partition Information.
	505	7	Shall all be set to (00).

18.3 Memory Heap Management

Heap Memory shall not contain any information except following information.

- Partition Information
- Physical Tape Directory Information
- User Volume Information
- User Partition Information
- Application Information
- Date and Time Stamp Information
- Media Identification Information
- Tape Alert Information

18.3.1 Cell

All Information located in the Memory Heap shall be Cells. Each Cell shall consist of a Cell Header and Information.

18.3.2 Cell Header

The Offset of the 1st Partition Information in the Memory Management Information Section of the AIT RMIC field shall be set to the offset of the Cell Header for Partition Information Cell. The Offset of the User Volume Information in the Memory Management Information Section of the AIT RMIC field shall be set to the offset of the Cell Header for the 1st User Volume Information Cell. The Offset of the User Partition Information in the Memory Management Information Section of the AIT RMIC field shall be set to the offset of Cell Header for the 1st User Partition Information Cell.

© ISO/IEC 2003 – All rights reserved

Copyright International Organization for Standardization
Provided by IHS under license with ISO
No reproduction or networking permitted without license from IHS
Not for Resale

Table 13 – Cell Header

Cell Checksum	1 byte	8 bytes
Cell Data Type ID	1 byte	
Cell Size	2 bytes	
Offset to the Previous Cell	2 bytes	
Offset to the Next Cell	2 bytes	

18.3.2.1 Cell Checksum

The sum operation shall be performed on each Cell, excluding the Cell Checksum field.

18.3.2.2 Cell Data Type ID

All Cells in the Memory Heap shall have Cell Data Type ID. All Cells do not contain compressed data.

Table 14 – Cell Data Type IDs

Cell Name	Cell Data Type ID
Partition Information Cell	1
Physical Tape Directory Information Cell	2
User Volume Information Cell	3
User Partition Information Cell	4
Application Information Cell	5
Date and Time Stamp Information Cell	6
Media Identification Information Cell	7
Tape Alert Information Cell	8
Other settings are prohibited by this International Standard	

18.3.2.3 Cell Size

The Cell Size is the sum of the size of the Cell Header and the size of the Information.

18.3.2.4 Offset to the Previous Cell and Offset to the Next Cell

Partition Information Cells, User Volume Note Cells, and User Partition Note Cells are chained each other by the Offset to the Previous Cell information and the Offset to the Next Cell information. The value of the Offset to the Next Cell for the last Cell shall be set to ZERO. The value of the Offset to the Previous Cell for the first Cell shall be set to ZERO.

© ISO/IEC 2003 – All rights reserved
Copyright International Organization for Standardization
Provided by IHS under license with ISO
No reproduction or networking permitted without license from IHS
Not for Resale

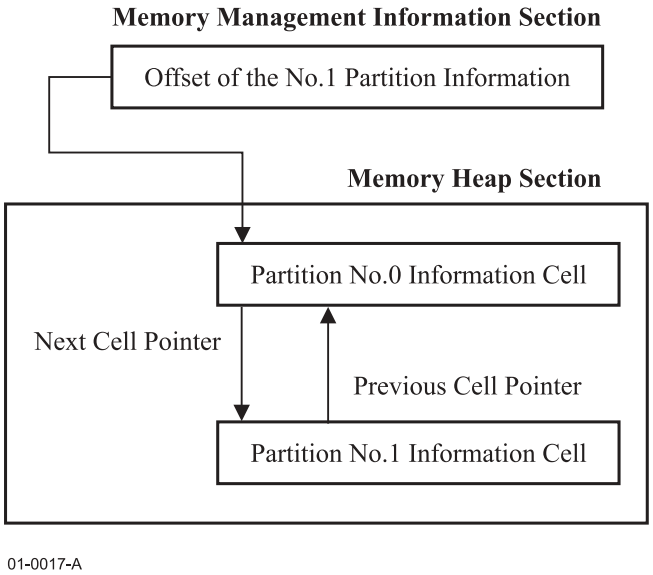

Figure 49 – Offset to the previous and to the next cell

18.3.3 Partition Information Cell

The Cell Data Type ID in the Cell Header for Partition Information Cell shall be set to 1. A partition of the tape shall have a Partition Information Cell in the Memory Heap Section.

Table 15 – Partition Information

Field	Number of Bytes	Description
Cell Header	8	See 18.3.2.
Partition Memo	8	The content of this field is not specified by this International Standard and shall be ignored in interchange.
Partition Information	48	See 16.4.2.1 and figure 45, Partition Information.

18.3.4 Physical Tape Directory Information Cell

The Cell Data Type ID in the Cell Header Information for Physical Tape Directory Cell shall be set to 2. A recorded data tape shall have a Physical Tape Directory Cell in the Memory Heap Section.

Table 16 – Physical Tape Directory Information

Field	Number of Bytes	Description
Cell Header	8	See 18.3.2.
Span	1	Shall be set to (0A). The sampling distance of Physical Directory Information. (Unit is metre).
Number of Physical Tape Directory Unit	1	Set to *n*, where *n* equals Tape Length divided by Span.
Array of Physical Tape Directory Information Unit	20 *n*	*n* array of the Physical Directory Information Unit for the cartridge.

© ISO/IEC 2003 – All rights reserved

Copyright International Organization for Standardization
Provided by IHS under license with ISO
No reproduction or networking permitted without license from IHS
Not for Resale

18.3.4.1 Physical Tape Directory Information Unit

The Physical Tape Directory Information Unit shall consist of 20 bytes. Its fields shall be as specified in table 17.

Table 17 – Physical Directory Information

Field	Number of Bytes	Description
Pad	1	Shall be set to ZERO.
AFN	3	Absolute Frame Number of the sampling point
Partition ID	1	Partition ID of the sampling point
Group Count	3	Group Count of the sampling point
Record Count	4	Record Count of the sampling point
Separator 2 Count	4	Separator 2 Count of the sampling point
Separator 1 Count	4	Separator 1 Count of the sampling point

18.3.5 User Volume Information Cell

The Cell Data Type ID in the Cell Header for the User Volume Information Cell shall be set to 3. The content of Data field is not specified by this International Standard.

Table 18 – User Volume Information Cell

Field	Number of Bytes	Description
Cell Header	8	See 18.3.2.
User Data	*n*	The content of Data field is not specified by this International Standard.

18.3.6 User Partition Information Cell

The Cell Data Type ID in the Cell Header for the User Partition Information Cell shall be set to 4. A partition of the tape may have a User Partition Information Cell in the Memory Heap Section. The content of Data field is not specified by this International Standard.

Table 19 – User partition Information Cell

Field	Number of Bytes	Description
Cell Header	8	See 18.3.2.
PAD	1	Shall be set to (00).
Partition Number	1	The User Partition Information Cell shall belong to the partition on tape indicated by the Partition Number field.
User Data	*n*	The content of Data field is not specified by this International Standard and shall be ignored in interchange.

--`,,,`-`-`,,`,,`,`,,`---

© ISO/IEC 2003 – All rights reserved
Copyright International Organization for Standardization
Provided by IHS under license with ISO
No reproduction or networking permitted without license from IHS
Not for Resale

18.3.7 Application Information Cell

The Cell Data Type ID in the Cell Header for Application Information Cell shall be set to 5.

Table 20 – Application Information Cell

Field	Number of Bytes	Description	
Cell Header	8	See 18.3.2.	
Valid Flags	1	Bit8	If the value of Text Localisation ID field is valid then set to ONE, else set to ZERO.
		Bit7	If the value of Application Vendor field is valid then set to ONE, else set to ZERO.
		Bit6	If the value of Application Name field is valid then set to ONE, else set to ZERO.
		Bit5	If the value of Application Version field is valid then set to ONE, else set to ZERO.
		Bit4	If the value of Application Text Label field is valid then set to ONE, else set to ZERO.
		Bit3	If the value of Host Name field is valid then set to ONE, else set to ZERO.
		Bit2	Set to ZERO.
		Bit1	Set to ZERO.
Text Localisation ID	1	The character set used for the Application Text Label with a text format. See table 21 (18.3.7.1).	
Application Vendor	8	The manufacturer of the application client (e.g. backup program). ECMA-6 notation.	
Application Name	32	The name of the application client.	
Application Version	8	The version of the application client.	
Application Text Label	160	The user level identifier for the medium.	
Host Name	80	The host server from that User Media Text Label originates.	
PAD	6	All set to (00).	

© ISO/IEC 2003 – All rights reserved

Copyright International Organization for Standardization
Provided by IHS under license with ISO
No reproduction or networking permitted without license from IHS
Not for Resale

18.3.7.1 Text Localisation ID

Table 21 – Identifiers for Text Localisation

Identifier	Character Set
(00)	No code specified (ECMA-6)
(01)	ISO/IEC 8859-1 (Europe, Latin America)
(02)	ISO/IEC 8859-2 (Eastern Europe)
(03)	ISO/IEC 8859-3 (South East Europe/miscellaneous)
(04)	ISO/IEC 8859-4 (Scandinavia, Baltic)
(05)	ISO/IEC 8859-5 (Cyrillic)
(06)	ISO/IEC 8859-6 (Arabic)
(07)	ISO/IEC 8859-7 (Greek)
(08)	ISO/IEC 8859-8 (Hebrew)
(08)	ISO/IEC 8859-9 Latin 5
(0A)	ISO/IEC 8859-10 Latin 6
(0B) to (7F)	Prohibited by this International Standard
(80)	ISO/IEC 10646 (Unicode)
(81)	ISO/IEC 10646 –1 (Amendment 2 (UTF-8))
(82) to (FF)	Prohibited by this International Standard

18.3.8 Date and Time Stamp Information Cell

The Cell Data Type ID in the Cell Header for Date and Time Stamp Information Cell shall be set to 6. Application Information Cells and Date and Time Stamp Information Cells shall be chained (see 18.3.2.4).

Table 22 – Date and Time Stamp Information Cell (continued)

Field	Number of Bytes	Description	
Cell Header	8	See 18.3.2.	
Valid Flag	1	Bit8	If the value of Date and Time Last Written field is valid then set to ONE, else set to ZERO.
		Bit7	Set to ZERO.
		Bit6	Set to ZERO.
		Bit5	Set to ZERO.
		Bit4	Set to ZERO.
		Bit3	Set to ZERO.
		Bit2	Set to ZERO.
		Bit1	Set to ZERO.

© ISO/IEC 2003 – All rights reserved
Copyright International Organization for Standardization
Provided by IHS under license with ISO
No reproduction or networking permitted without license from IHS
Not for Resale

Table 22 – Date and Time Stamp Information Cell (concluded)

Date and Time Last Written	12	This field specifies when the application client wrote for the last time to the AIT RMIC. The format of the string shall be YYYYMMDDHHMM using a 24-hour format.
PAD	11	All set to (00).

18.3.9 Media Identification Information Cell

The Cell Data Type ID in the Cell Header for Media Identification Information Cell shall be set to 7. Application Information Cells and Date and Media Information Cells shall be chained (see 18.3.2.4).

Table 23 – Medium ID Information

Field	Number of Bytes	Description	
Cell Header	8	See 18.3.2.	
Valid Flags	1	Bit8	If the value of Barcode field is valid then set to ONE, else set to ZERO.
		Bit7	If the value of Media Pool field is valid then set to ONE, else set to ZERO.
		Bit6	Set to ZERO.
		Bit5	Set to ZERO.
		Bit4	Set to ZERO.
		Bit3	Set to ZERO.
		Bit2	Set to ZERO.
		Bit1	Set to ZERO.
Barcode	32	The Barcode attribute allows an application server to store the contents of a Barcode associated with the medium in AIT RMIC.	
Media Pool	160	The Media Pool to which the medium belongs.	
PAD	7	Shall all be set to (00).	

18.3.10 Tape Alert Information Cell

The Cell Data Type ID in the Cell Header for Tape Alert Information Cell shall be set to 8.

© ISO/IEC 2003 – All rights reserved

Copyright International Organization for Standardization
Provided by IHS under license with ISO
No reproduction or networking permitted without license from IHS
Not for Resale

Table 24 – Tape Alert Flag Information

Field	Number of Bytes	Description
Cell Header	8	See 18.3.2.
Tape Alert Flags	8	This information is not required for interchange This field shall be set to all (00) when the cartridge is threaded. If used this field shall be set to the Tape Alert Flags as determined by the drive. The Tape Alert Flags are numbered form 1 to 64 and shall be mapped so that flag 1 shall be specified by bit 7 of Byte 0 of this field and flag 64 shall be specified by bit 0 of Byte 7 of this field.

18.4 Electrical interface

The interface between the AIT RMIC and an external communication device, herein referred to as the AIT RMIC reader-writer, shall be via a contactless radio frequency interface. This radio frequency shall provide power transfer to the AIT RMIC, and shall provide read/write access to the AIT RMIC.

The AIT RMIC shall appear to the AIT RMIC reader-writer as an EEPROM containing 8 192 bytes organised as 512 accessible blocks of 16 bytes each. Features include a 16-bit CRC, parity, write-inhibition and a single block access.

18.5 Environment

18.5.1 Electromagnetic Compatibility

The AIT RMIC shall be neither destroyed nor altered after exposure to commonly encountered electromagnetic fields.

18.5.2 Magnetic fields

The AIT RMIC shall continue to function normally after exposure to a static magnetic field of 79 500 A/m.

18.5.3 X-rays

The AIT RMIC shall withstand the effect of exposure of the cartridge, in any orientation, to X-ray radiation, with energy in the range 70 keV to 140 keV, of a cumulative dose of 0,1 Gray per year.

18.6 Operating Field

The Operating Field is generated by the AIT RMIC reader-writer . The Operating Field shall supply power to the AIT RMIC, and shall be modulated by both the AIT RMIC reader-writer and the AIT RMIC for communication between these devices. The Operating Field characteristics as measured at the AIT RMIC antenna shall be

– Frequency (fc) 13 560 kHz ± 7 kHz

– Minimum field (H_{min}) 1,5 A/m

– Maximum field (H_{max}) 7,5 A/m

The AIT RMIC shall operate as intended continuously between H_{min} and H_{max}.

The AIT RMIC reader-writer shall not generate a field higher than 0,361 A/m rms in any possible AIT RMIC position.

18.7 Message from AIT RMIC reader-writer to AIT RMIC

The bit rate for the transmission shall be 106k bit per second. The AIT RMIC reader-writer shall communicate to the AIT RMIC via ASK 10 % amplitude modulation of the Operating Field as described below. The modulation index shall be between 8 % and 14 %.

The bit coding for commands and data sent from the AIT RMIC reader-writer to the AIT RMIC shall be Manchester encoding with logic levels defined as follows

© ISO/IEC 2003 – All rights reserved
Copyright International Organization for Standardization
Provided by IHS under license with ISO
No reproduction or networking permitted without license from IHS
Not for Resale

Logic 1: The first half of a bit is high field amplitude (no modulation applied), and the second half of the bit is low field amplitude.

Logic 0: The first half of a bit is low field amplitude, and the second half of the bit is carrier high field amplitude (no modulation applied).

The start of communication shall be indicated by a minimum of two bytes of Logic 0 followed by the synchronous pattern (00)(B2)(4D).

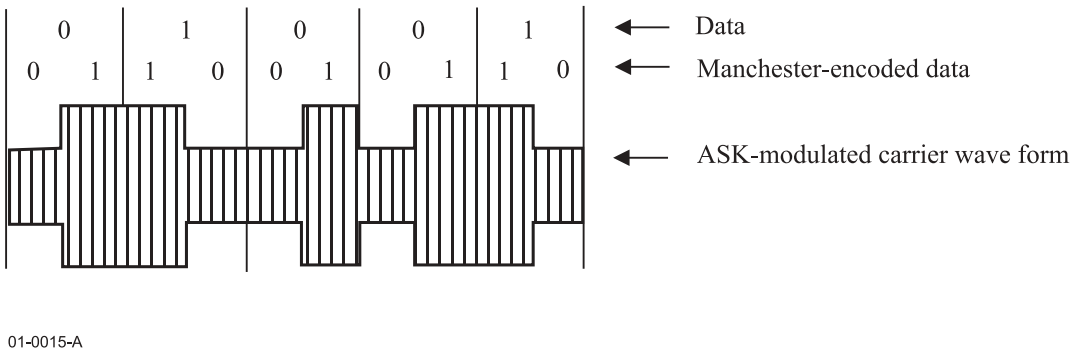

Figure 50 – Communication from AIT RMIC reader-writer to AIT RMIC

Messages between the AIT RMIC reader-writer and the AIT RMIC shall comprise the following fields: a Preamble, a Synchronous pattern, a Data Length, Data, and EDC

- The Preamble shall consist of at least 16 bits set to ZEROs. The Synchronous pattern shall be consist of the 24-bit pattern: 00000000 10110010 01001101.
- The Data Length shall consist of 1 byte.
- Data shall consist of either 4 bytes or 20 bytes.
- The EDC shall consist of 2 bytes (see annex M).

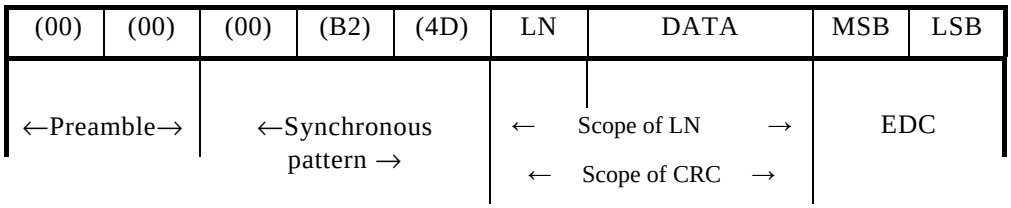

Figure 51 – Message from AIT RMIC reader-writer to AIT RMIC

18.8 Message from AIT RMIC to AIT RMIC reader-writer

The bit rate for the transmission shall be 106k bit per second. The AIT RMIC shall communicate to the AIT RMIC reader-writer by load modulation of the Operating Field. The bit coding for commands and data sent from the AIT RMIC to the AIT RMIC reader-writer shall be Manchester encoding.

Messages from the AIT RMIC to the AIT RMIC reader-writer shall comprise a Preamble, a Synchronous pattern, a Data Length, Data, a EDC, and a Postamble.

- The Preamble shall be consist of at least 16 bits set to ZEROs.
- The Synchronous pattern shall be consist of the 24-bit pattern : 00000000 10110010 01001101
- The Data Length shall consist of 1 byte.
- Data shall consist of either 4 bytes or 20 bytes.
- The EDC shall consist of 2 bytes (see annex M).
- The Postamble shall consist of 1 byte set to (00).

© ISO/IEC 2003 – All rights reserved

Copyright International Organization for Standardization
Provided by IHS under license with ISO
No reproduction or networking permitted without license from IHS
Not for Resale

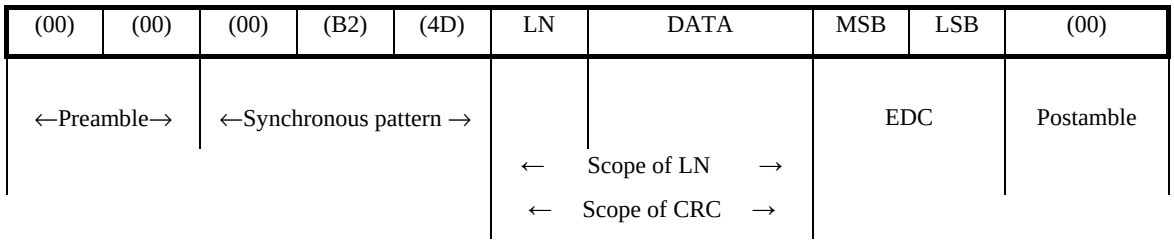

Figure 52 – Message from AIT RMIC to AIT RMIC reader-writer

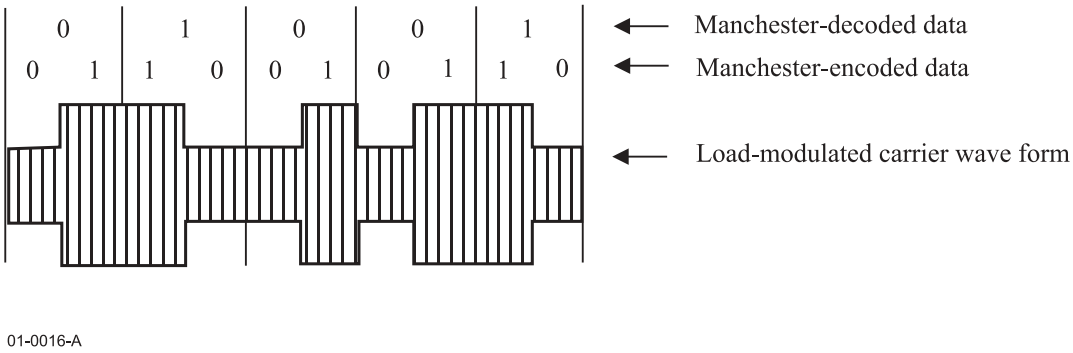

Figure 53 - Communication from AIT RMIC to AIT RMIC reader-writer

18.8.1 Load modulation

Load modulation is the process of amplitude modulating a radio frequency field by varying the properties of a resonant circuit placed within the radio frequency field. Figures 54, 55 and 56 illustrate the principle of load modulation. In figure 54 a resistive load is switched in a coil that is inductively coupled to another coil that generates a radio frequency field. Such switching amplitude modulates the radio frequency field in the coil that generates the radio frequency field. Figure 54 is a conceptual illustration - not intended for circuit design - of the AIT RMIC reader-writer to AIT RMIC interface, showing an inductively coupled field being load modulated by the AIT RMIC. When communicating to the AIT RMIC reader-writer , the AIT RMIC shall cause an amplitude modulation of 0,7 A/m minimum in the radio frequency field generated by the AIT RMIC reader-writer. Figure 55 illustrates the amplitude modulation that results from switching of the resistive load. Figure 56 illustrate the load modulation wave form.

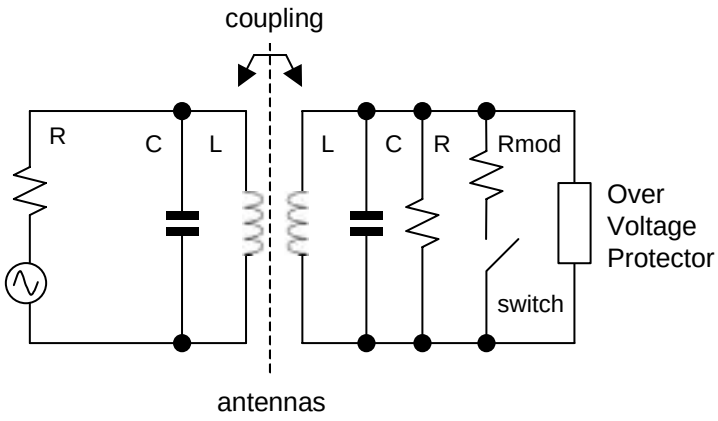

Figure 54 – AIT RMIC interface network

© ISO/IEC 2003 – All rights reserved
Copyright International Organization for Standardization
Provided by IHS under license with ISO
No reproduction or networking permitted without license from IHS
Not for Resale

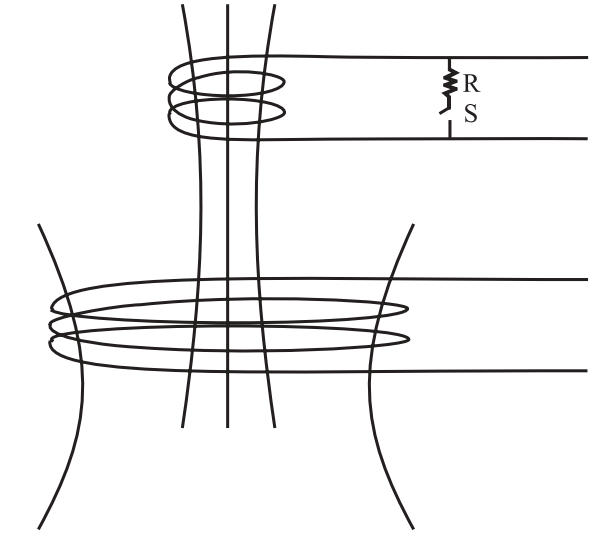

Figure 55 - Illustration of load modulation modulator

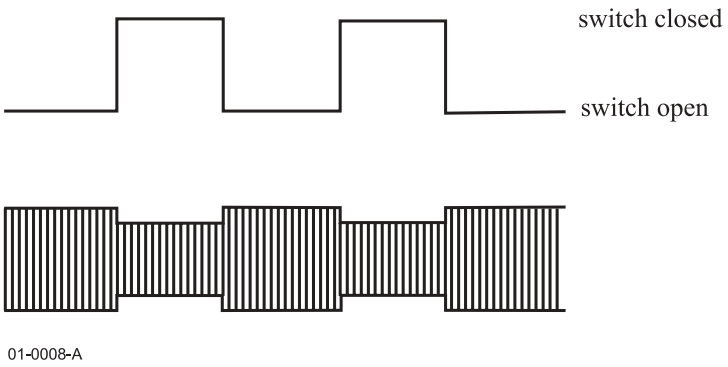

Figure 56 - Load modulation waveform

18.9 EDC

For commands and data that are protected by the 16-bit EDC, the generator polynomial shall be

$$G(x) = x^{16} + x^{12} + x^5 + 1$$

See annex M.

18.10 AIT RMIC states

The AIT MIC shall have the following states:

- Reset state
- Idle state
- Command and Response state

The AIT RMIC shall enter the initialize state when it senses the application of the Operating Field, after a minimum of 1 ms during which it did not sense the Operating Field.

The states of the AIT RMIC are given in table 25. Items toward the top of the table have precedence in order of execution, that is, any state begins at the first entry of that state then proceed down. The AIT RMIC action shall be the first entry in the table that satisfies the conditions.

© ISO/IEC 2003 – All rights reserved

Copyright International Organization for Standardization
Provided by IHS under license with ISO
No reproduction or networking permitted without license from IHS
Not for Resale

Table 25 – AIT RMIC states

PRESENT STATE	AIT RMIC reader-writer TRANSMISSION	AIT RMIC RESPONSE	NEXT STATE
Non-operating	Operating Field applied	Initializes	Reset
Any state	Operating Field removed	Shuts down	Non-operating

PRESENT STATE	AIT RMIC reader-writer TRANSMISSION	AIT RMIC RESPONSE	NEXT STATE
Reset	Attention Command	Attention Response	Idle
Reset	Any other Command	No response	Reset

PRESENT STATE	AIT RMIC reader-writer TRANSMISSION	AIT RMIC RESPONSE	NEXT STATE
Idle	Read Command	Read Response	Idle
Idle	Write Command	Write Response	Idle
Idle	Status Command	Status Response	Idle
Idle	Reset Command	Reset Response	Reset
Idle	Any other Command	No response	Idle

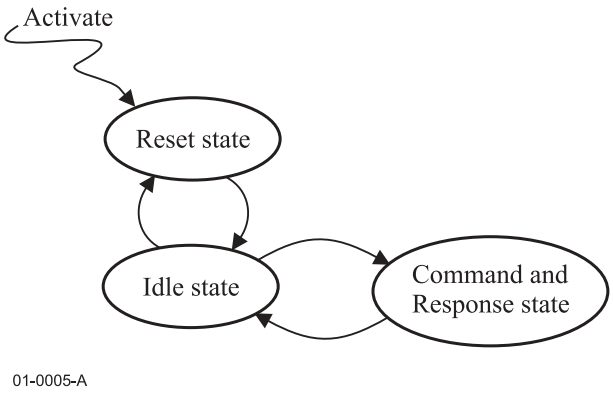

Figure 57 – AIT RMIC states

18.11 Command and Response

The AIT RMIC reader-writer shall issue, and the AIT RMIC shall respond to, the commands shown below. The Message from AIT RMIC reader-writer to AIT RMIC consists of Preamble, Synchronous-pattern, Command, and EDC. The Message from AIT RMIC to AIT RMIC reader-writer consists of Preamble, Synchronous-pattern, Response, EDC, and Postamble. Upon receipt of any command, the AIT RMIC shall perform the operation described below, and go to the next state, as described in table 25.

Bytes shall be transmitted most significant byte first. Bits within bytes shall be transmitted most significant bit first.

LN Packet data length (range 1 to 21)
OP Operation Code
BKL Block Address (MSB)
BKH Block Address (LSB)
SID Session ID

© ISO/IEC 2003 – All rights reserved
Copyright International Organization for Standardization
Provided by IHS under license with ISO
No reproduction or networking permitted without license from IHS
Not for Resale

ST State if set to (0) indicates the Reset state, if set to (1) indicates the Idle state. Others setting are prohibited by this International Standard.

ER 8-bit Error Flag : bit1 set to ONE = Voltage error, bit2 set to ONE = Block address error, bit3 to ONE = Write error, bit4 set to ONE = Condition error, bit5 set to ONE = Compare data error. When none of these errors occur, the corresponding bit shall be set to ZERO

PR Parameter

Commands that are not defined by this International Standard shall be ignored.

The Attention command must precede the Read/Write command. RMIC data is accessible by 16 bytes, or 1 block. The Read and Write commands can be repeated any times with different block address, after the Attention-command.

LN	**Data**
1 Byte	4 Bytes or 20 Bytes
(05) or (15)	D_1 D_{20}

Figure 58 – Command and Responses

18.11.1 Attention Command and Response

There are two types of Attention Command. The type 1 ignores the Session ID. The type 2 acknowledges the Session ID.

18.11.2 Attention Command and Response Type 1

When the OP in the Command is (D4), then BKL, BKH and PR in the Command shall be set to (00).

	LN	OP	BKL	BKH	PR
Command	(05)	(D4)	(00)	(00)	(00)

The OP of the Response shall be set to (D5). When the Command was processed with no error, the ER of the Response shall be set to (00) and ST shall be set to (01). The PR of the Response shall be set to (00).

	LN	OP	ER	ST	PR
Response	(05)	(D5)	(00)	(01)	(00)

18.11.3 Attention Command and Response Type 2

When the OP in the Command is (DC), then BKL shall be set to (0D), BKH shall be set to (00), PR shall be set (00).

	LN	OP	BKL	BKH	PR
Command	(05)	(DC)	(0D)	(00)	(00)

The OP of the Response shall be (DD). When the Command was processed with no error, the ER of the Response shall be set to (00) and ST shall be set to (01). The PR of the Response shall be set to (*m*).

	LN	OP	ER	ST	PR
Response	(05)	(DD)	(00)	(01)	(*m*)

© ISO/IEC 2003 – All rights reserved

Copyright International Organization for Standardization
Provided by IHS under license with ISO
No reproduction or networking permitted without license from IHS
Not for Resale

18.11.4 Read Command and Response

When the OP in the Command is (48), it is a Read Command and BKL and BKH shall be set to the target Block Address. If one block of data is read from the AIT RMIC block address (0123) having the Session ID (*m*), then BKL shall be set to (23) and BKH shall be set to (01).

	LN	OP	BKL	BKH	PR
Command	(05)	(48)	(23)	(01)	(*m*)

The OP of the Response shall be (49). When the Command was processed with no error, the ER of the Response shall be set to (00) and ST shall be set to (01). The PR of the Response shall be set to (*m*).

	LN	OP	ER	ST	PR	
Response	(15)	(49)	(00)	(01)	(*m*)	1 block of data (16 bytes)

18.11.5 Write Command and Response

When the OP in the Command is (28), it is a Write Command and BKL and BKH shall be set to the target Block Address. If one block of data is written to the AIT RMIC block address (0123) having the Session ID (*m*), then BKL shall be set to (23) and BKH shall be set to (01).

	LN	OP	BKL	BKH	PR	
Command	(15)	(28)	(23)	(01)	(*m*)	1 block data (16 bytes)

The OP of the Response shall be (29). When the Command was processed with no error, the ER of the Response shall be set to (00) and ST shall be set to (01). The PR of the Response shall be set to (*m*).

	LN	OP	ER	ST	PR
Response	(05)	(29)	(00)	(01)	(*m*)

18.11.6 Status Command and Response

When the OP in the Command is (98), it is Status Command. BKL and BKH shall be set to ZERO. The PR shall be set to the Session ID (*m*).

	LN	OP	BKL	BKH	PR
Command	(05)	(98)	(00)	(00)	(*m*)

The OP of the Response shall be (99). When the Command was processed with no error, the ER of the Response shall be set to (00) and ST shall be set to (01). The PR of the Response shall be set to (*m*).

	LN	OP	ER	ST	PR	B1	••••••••••	B16
Response	(15)	(99)	(00)	(01)	(*m*)	Status Information		

18.11.6.1 Status Information

Status Information consists of 16 bytes.

--`,,,`-`-`,,`,,`,`,,`---

© ISO/IEC 2003 – All rights reserved
Copyright International Organization for Standardization
Provided by IHS under license with ISO
No reproduction or networking permitted without license from IHS
Not for Resale

Byte Position	Information
B1	Hardware release number
B2	Maximum Block Address (LSB)
B3	Maximum Block Address (MSB)
B4 to B16	All set to (00).

18.11.7 Reset Command and Response

When the OP in the Command is (C8), it is Reset Command. BKL and BKH shall be set to ZERO. The PR shall be set to the Session ID (m). Instruct the AIT RMIC having the Session ID (m) to move to Reset State.

	LN	OP	BKL	BKH	PR
Command	(05)	(C8)	(00)	(00)	(*m*)

The OP of the Response shall be (C9). When the Command was processed with no error, the ER of the Response shall be set to (00) and ST shall be set to (00). The PR of the Response shall be set to (m).

	LN	OP	ER	ST	PR
Response	(05)	(C9)	(00)	(00)	(*m*)

18.12 Dialogue

18.12.1 Read data from AIT RMIC

For example, Read 1 block from the AIT RMIC, the block address of which is (0123). First of all, AIT RMIC reader-writer shall issue the Attention Command to the AIT RMIC. If an activated AIT RMIC is exists, the AIT RMIC shall response to AIT RMIC reader-writer.

After receiving the response from the AIT RMIC, then AIT RMIC reader-writer shall issue the Read Command to the AIT RMIC. The AIT RMIC will respond with requested data block.

If AIT RMIC reader-writer requires more data than one block, then AIT RMIC reader-writer shall repeat the 2nd stage Read command any times without Attention command. Because the AIT RMIC is in the idle state.

1st stage: Attention stage

	LN	OP	BKL	BKH	PR
Command from AIT RMIC reader to AIT RMIC	(05)	(D4)	(00)	(00)	(00)

	LN	OP	ER	ST	PR
Response from AIT RMIC to AIT RMIC reader	(05)	(D5)	(00)	(01)	(00)

2nd stage: Read stage

	LN	OP	BKL	BKH	PR
Command from AIT RMIC reader to AIT RMIC	(05)	(40)	(23)	(01)	(00)

	LN	OP	ER	ST	PR	DATA
Response from AIT RMIC to AIT RMIC reader	(15)	(41)	(00)	(01)	(00)	16 bytes

© ISO/IEC 2003 – All rights reserved

Copyright International Organization for Standardization
Provided by IHS under license with ISO
No reproduction or networking permitted without license from IHS
Not for Resale

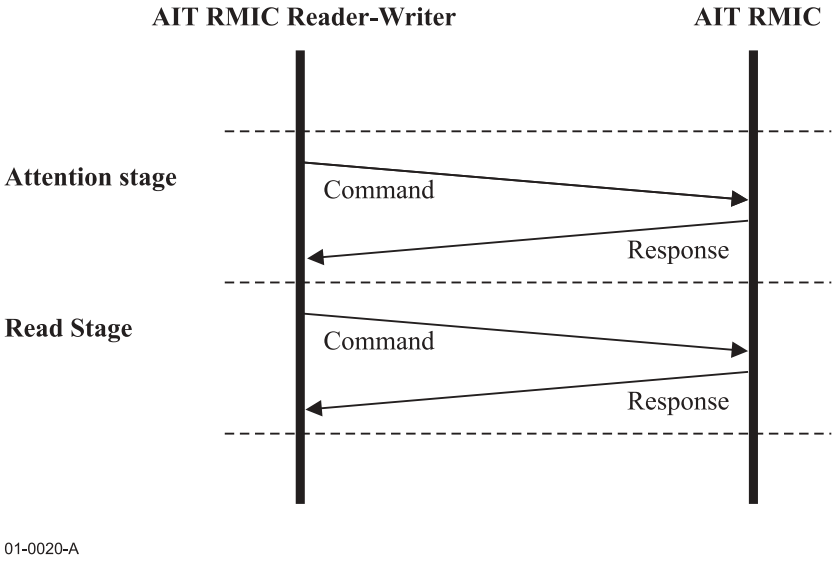

Figure 59 - Attention Stage/Read Stage

18.12.2 Write data to AIT RMIC

For example, Write 1 block to the AIT RMIC, the block address of which is (0123). First of all, AIT RMIC reader-writer shall issue the Attention Command to the AIT RMIC. If an activated AIT RMIC is exists, the AIT RMIC shall response to AIT RMIC reader-writer.

After receiving the response from the AIT RMIC, then AIT RMIC reader-writer shall issue the Write Command to the AIT RMIC. The AIT RMIC will respond to AIT RMIC reader-writer.

If AIT RMIC reader-writer has more data than one block to write, then AIT RMIC reader-writer shall repeat the 2nd stage Write command any times without Attention command. Because the AIT RMIC is in idle state.

1st stage: Attention stage

Command from AIT RMIC writer to AIT RMIC

LN	OP	BKL	BKH	PR
(05)	(D4)	(00)	(00)	(00)

Response from AIT RMIC to AIT RMIC writer

LN	OP	ER	ST	PR
(05)	(D5)	(00)	(01)	(00)

2nd stage: Write stage

Command from AIT RMIC writer to AIT RMIC

LN	OP	BKL	BKH	PR	DATA
(15)	(20)	(23)	(01)	(00)	16 bytes

Response from AIT RMIC to AIT RMIC writer

LN	OP	ER	ST	PR
(05)	(21)	(00)	(01)	(00)

--`,,`-`-`,,`,,`,`,,`---

© ISO/IEC 2003 – All rights reserved
Copyright International Organization for Standardization
Provided by IHS under license with ISO
No reproduction or networking permitted without license from IHS
Not for Resale

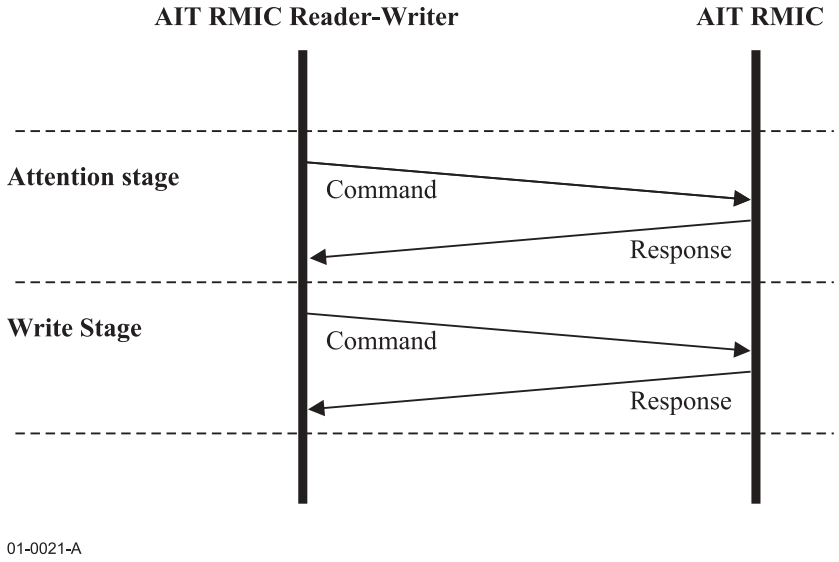

Figure 60 – Attention Stage/Write Stage

18.12.3 Read and Write with Session ID

The Session ID is the 1-byte information allocated at the offset of 209 in AIT RMIC. The Cartridge Serial Number is the unique and formal name of AIT RMIC. In other hand, the Session ID is a temporary name of AIT RMIC. The Session ID is changeable information, although the Cartridge Serial Number is read-only information. Even if many AIT RMIC are allocated very close each other, AIT RMIC reader-writer reads/writes from/to the exact AIT RMIC by using the Session ID.

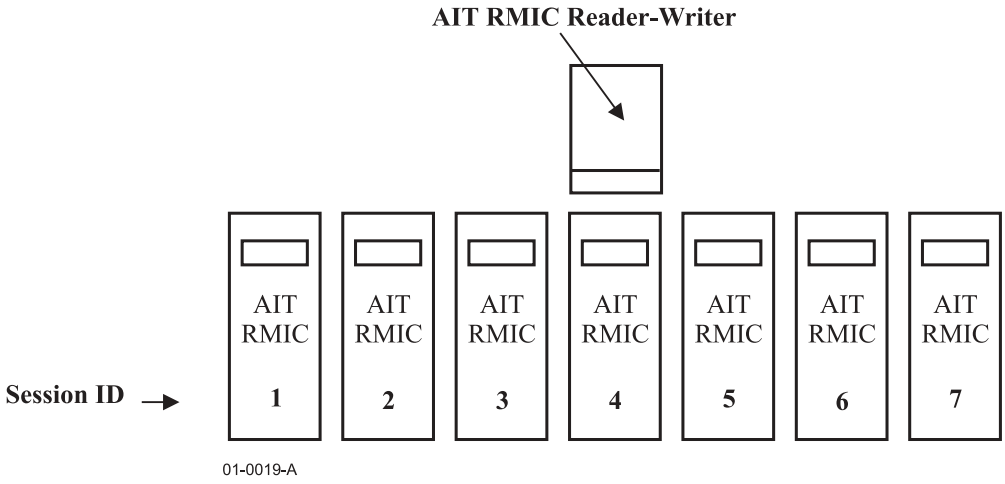

Figure 61 – Read/Write with Session ID

18.12.3.1 Attention with Session ID

While AIT RMIC reader-writer applies enough power to AIT RMIC, the internal State moves to Reset State. When AIT RMIC reader-writer issues Attention command, OP code (DC), to AIT RMIC under Reset State, the internal State moves to Idle State and Session ID *m* is reported in the PR field of Response message.

Command from AIT RMIC reader to AIT RMIC

LN	OP	BKL	BKH	PR
(05)	(DC)	(0D)	(00)	(00)

Response from AIT RMIC to AIT RMIC reader

LN	OP	ER	ST	PR
(05)	(DD)	(00)	(01)	(*m*)

© ISO/IEC 2003 – All rights reserved

Copyright International Organization for Standardization
Provided by IHS under license with ISO
No reproduction or networking permitted without license from IHS
Not for Resale

18.12.3.2 Reset with Session ID

For example, there are 7 AIT RMIC in front of the AIT RMIC reader-writer. Each AIT RMIC have already has unique Session ID. Reset command is useful for removing the unpleasant cross talk from both side of AIT RMIC, because the AIT RMICs having Session ID 3 and 5 will forth to sleep (Reset State).

1st stage: Attention stage

While AIT RMIC reader-writer applies enough power to AIT RMIC, the internal State moves to Reset State. When AIT RMIC reader-writer issues Attention command, OP code (DC), to AIT RMIC under Reset State, the internal State moves to Idle State and Session ID *m* is reported in the PR field of Response message.

Command from AIT RMIC reader to AIT RMIC

LN	OP	BKL	BKH	PR
(05)	(DC)	(0D)	(00)	(00)

Response from AIT RMIC to AIT RMIC reader

LN	OP	ER	ST	PR
(05)	(DD)	(00)	(01)	(*m*)

2nd stage: Reset stage Let the AIT RMIC Session ID 3 go to Reset State.

Command from AIT RMIC reader to AIT RMIC

LN	OP	BKL	BKH	PR
(05)	(C8)	(00)	(00)	(03)

Response from AIT RMIC to AIT RMIC reader

LN	OP	ER	ST	PR
(05)	(C9)	(00)	(00)	(03)

3rd stage: Reset stage Let the AIT RMIC Session ID 5 go to Reset State.

Command from AIT RMIC reader to AIT RMIC

LN	OP	BKL	BKH	PR
(05)	(C8)	(00)	(00)	(05)

Response from AIT RMIC to AIT RMIC reader

LN	OP	ER	ST	PR
(05)	(C9)	(00)	(00)	(05)

18.12.3.3 Read with Session ID

For example, Read 1 block from the AIT RMIC that Session ID is (04) and the block address of which is (0123). The Read method using Session ID is safer way to read from the target AIT RMIC.

1st stage: Attention stage

Command from AIT RMIC reader to AIT RMIC

LN	OP	BKL	BKH	PR
(05)	(DC)	(OD)	(00)	(00)

© ISO/IEC 2003 – All rights reserved
Copyright International Organization for Standardization
Provided by IHS under license with ISO
No reproduction or networking permitted without license from IHS
Not for Resale

	LN	OP	ER	ST	PR
Response from AIT RMIC to AIT RMIC reader	(05)	(DD)	(00)	(01)	(04)

PR indicates the Session ID.

2nd stage: Reset stage Let the AIT RMIC Session ID 3 go to Reset State.

	LN	OP	BKL	BKH	PR
Command from AIT RMIC reader to AIT RMIC	(05)	(C8)	(00)	(00)	(03)

	LN	OP	ER	ST	PR
Response from AIT RMIC to AIT RMIC reader	(05)	(C9)	(00)	(00)	(03)

If the AIT RMIC of Session ID (03) is not in Idle State, there is no Response.

3rd stage: Reset stage Let the AIT RMIC Session ID 5 go to Reset State.

	LN	OP	BKL	BKH	PR
Command from AIT RMIC reader to AIT RMIC	(05)	(C8)	(00)	(00)	(05)

	LN	OP	ER	ST	PR
Response from AIT RMIC to AIT RMIC reader	(05)	(C9)	(00)	(00)	(05)

If the AIT RMIC of Session ID (05) is not in Idle State, there is no Response.

4th Stage: Read stage

	LN	OP	BKL	BKH	PR
Command from AIT RMIC reader to AIT RMIC	(05)	(48)	(23)	(01)	(04)

PR indicates the Session ID:

	LN	OP	ER	ST	PR	DATA
Response from AIT RMIC to AIT RMIC reader	(15)	(49)	(00)	(01)	(04)	16 bytes

PR indicates the Session ID.

18.12.3.4 Write with Session ID

For example, Write 1 block to the AIT RMIC that Session ID is (04), and the block address is (0123). The Write method using Session ID is safer way to write to the target AIT RMIC.

1st stage: Attention stage

	LN	OP	BKL	BKH	PR
Command from AIT RMIC reader to AIT RMIC	(05)	(DC)	(0D)	(00)	(00)

	LN	OP	ER	ST	PR
Response from AIT RMIC to AIT RMIC reader	(05)	(DD)	(00)	(01)	(04)

PR indicates Session ID.

© ISO/IEC 2003 – All rights reserved

Copyright International Organization for Standardization
Provided by IHS under license with ISO
No reproduction or networking permitted without license from IHS
Not for Resale

2nd stage: Reset stage

Let the AIT RMIC Session ID 3 go to Reset State.

Command from AIT RMIC reader to AIT RMIC

LN	OP	BKL	BKH	PR
(05)	(C8)	(00)	(00)	(03)

Response from AIT RMIC to AIT RMIC reader

LN	OP	ER	ST	PR
(05)	(C9)	(00)	(00)	(03)

If the AIT RMIC of Session ID 03 is not in Idle State, there is no Response.

3rd stage: Reset stage:

Let the AIT RMIC Session ID 5 go to Reset State.

Command from AIT RMIC reader to AIT RMIC

LN	OP	BKL	BKH	PR
(05)	(C8)	(00)	(00)	(05)

Response from AIT RMIC to AIT RMIC reader

LN	OP	ER	ST	PR
(05)	(C9)	(00)	(00)	(05)

If the AIT RMIC of Session ID 5 is not in Idle State, there is no Response.

4th stage: Write stage

Command from AIT RMIC reader to AIT RMIC

LN	OP	BKL	BKH	PR	DATA
(15)	(28)	(23)	(01)	(04)	16 bytes

Response from AIT RMIC to AIT RMIC reader

LN	OP	ER	ST	PR
(05)	(29)	(00)	(01)	(04)

PR indicates the Session ID.

© ISO/IEC 2003 – All rights reserved
Copyright International Organization for Standardization
Provided by IHS under license with ISO
No reproduction or networking permitted without license from IHS
Not for Resale

Annex A
(normative)

Measurement of light transmittance

A.1 Introduction

The following description outlines the general principle of the measuring equipment and measuring method to be applied when measuring the light transmittance of tape.

For the purpose of this International Standard "light transmittance" is defined by convention as the relationship between the reading obtained from the measuring equipment with the test piece inserted and the reading obtained when no test piece is present. The transmittance value is expressed as the percentage ratio of the two readings.

A.2 Description of the measuring equipment

The equipment shall consist of

- the radiation source;
- the radiation receiver;
- the measuring mask;
- the optical path;
- the measuring circuitry.

A.2.1 Radiation source

An infra-red light-emitting diode (LED) with the following parameters shall be used:

wavelength at peak emission : 850 nm ± 50 nm
half-power bandwidth : ± 50 nm

A.2.2 Radiation receiver

A flat silicon photo diode shall be used. It shall be operated in the short circuit mode.

A.2.3 Measuring mask

The measuring mask shall have a thickness of 2 mm and a circular aperture of diameter d such that the area is 80 % to 100 % of the active area of the photo diode.

The surface of the mask shall be matt black.

The test piece shall be held firmly against the mask to cover the aperture and to ensure that no ambient light leaks past.

A.2.4 Optical path (figure A.1)

The optical path shall be perpendicular to the mask. The distance from the emitting surface of the LED to the mask shall be

$$L = \frac{d}{2\tan\alpha}\text{mm}$$

where d is in mm and α is the angle where the relative intensity of the LED is equal to, or greater than, 95 % of the maximum intensity of the optical axis.

A.2.5 Finish

The whole assembly shall be enclosed in a matt black case.

A.2.6 Measuring circuitry (figure A.2)

The components of the measuring circuitry are

E : regulated power supply with variable output voltage
R : current-limiting resistor

© ISO/IEC 2003 – All rights reserved

Copyright International Organization for Standardization
Provided by IHS under license with ISO
No reproduction or networking permitted without license from IHS
Not for Resale

LED : light-emitting diode
Di : silicon photo diode
A : operational amplifier
R_{f0}, R_{f1} : feedback resistors
S : gain switch
V : voltmeter

The forward current of the LED, and consequently its radiation power, can be varied by means of the power supply E.

Di is operating in the short circuit mode.

The output voltage of the operational amplifier is given by

$$V_0 = I_k \times R_f$$

where:

I_k is the short-circuit current of Di.

The output voltage is therefore a linear function of the light intensity.

R_{f0} and R_{f1} shall be low temperature-drift resistors with an accuracy of 1 %. The following ratio applies

$$\frac{R_{f0}}{R_{f1}} = \frac{1}{20}$$

A.3 Measuring method

– Set switch S to position 0.

– With no test piece mounted vary the supply voltage of E until voltmeter V reads full scale (100 %).

– Mount a leader or trailer tape on the mask. The reading of the voltmeter shall be in the range 60 % to 100 %.

– Mount a test piece of magnetic tape on the mask. Set switch S to position 1. Full deflection of the voltmeter now represents a light transmittance of 5 %.

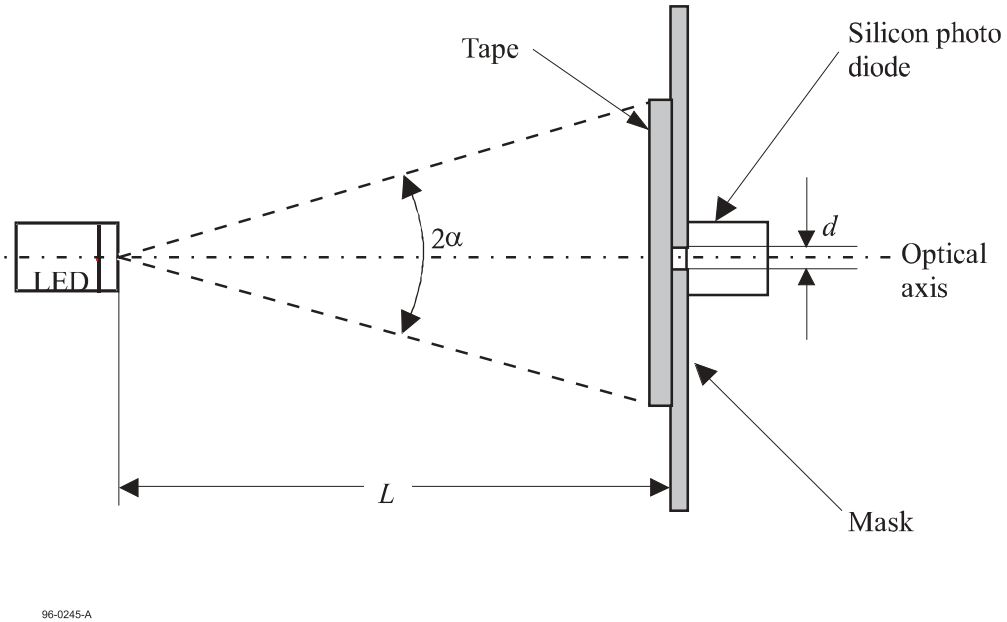

Figure A.1 - Optical arrangement

© ISO/IEC 2003 – All rights reserved
Copyright International Organization for Standardization
Provided by IHS under license with ISO
No reproduction or networking permitted without license from IHS
Not for Resale

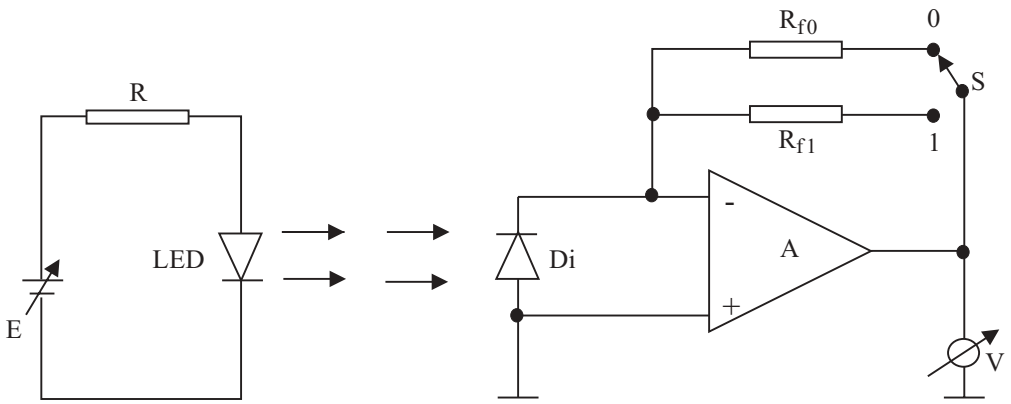

Figure A.2 - Measuring circuitry

© ISO/IEC 2003 – All rights reserved
Copyright International Organization for Standardization
Provided by IHS under license with ISO
No reproduction or networking permitted without license from IHS
Not for Resale

Annex B
(normative)

Measurement of Signal-to-Noise Ratio

The Signal-to-Noise Ratio shall be measured using a spectrum analyzer with a resolution bandwidth of 3 kHz.

Unless otherwise stated, the test conditions are those defined in clause 10 of this International Standard.

B.1 a.c. erase the tape to be tested.

B.2 Record the tape at 3 436,4 ftpmm. The associated recording frequency is denoted f_1.

B.3 Measure the rms signal amplitude by gating the sweep of the spectrum analyzer. Begin the measurements 1 ms after initial read head contact with the tape. Take the measurements for 1 ms. Each sweep yields one measured value. Compute the average of 8 measured values. This is S_{tape}.

Measure the total rms noise level at frequency f_2, where f_2 is 2 MHz smaller than f_1. Again take measurements for 1 ms as above. Each sweep yields one measured value. Compute the average of 100 measured values. This is N_{total}.

B.4 Measure the rms read channel noise level at frequency f_2 for 1 ms as in B.3, without a tape loaded but with the motors running. Each sweep yields one measured value. Compute the average of 8 measured values. This is N_{amp}.

B.5 Compute the Signal-to-Noise Ratio for this pass, $20 \log \frac{S_{tape}}{N_{tape}}$ dB,

where

$N_{tape} = \sqrt{N_{total}^2 - N_{amp}^2}$.

$\frac{N_{amp}}{N_{tape}}$ shall be less than 0,7

B.6 Repeat B3 to B5 for at least 10 passes. Take the average of the 10 Signal-to-Noise Ratios to determine the Signal-to-Noise Ratio for the tape (SNR_{tape}).

B.7 Repeat B.1 to B.6 for the Secondary Standard Reference Tape, to give SNR_{MSRT}.

The Signal-to-Noise Ratio characteristic is SNR_{tape} - SNR_{MSRT} dB.

© ISO/IEC 2003 – All rights reserved
Copyright International Organization for Standardization
Provided by IHS under license with ISO
No reproduction or networking permitted without license from IHS
Not for Resale

Annex C
(normative)

Method for determining the nominal and the maximum allowable recorded levels (pre-recording condition)

The following tests shall be carried out under the conditions defined in clause 10 of this International Standard.

C.1 Method for determining the Nominal Recorded Level

C.1.1 Read the section of the Secondary Standard Amplitude Calibration Tape that has been recorded at 4 581,9 ftpmm. Note the read output and apply the appropriate calibration factor.

C.1.2 a.c. erase the Secondary Standard Reference Tape and record 4 581,9 ftpmm, increasing the write current from a low value until the output on read equals, after applying the appropriate calibration factor, the value noted in C.1.1.

C.1.3 a.c. erase the interchange tape and record at 4 581,9 ftpmm with the current determined in C.1.2.

The read output from this tape is the Nominal Recorded Level for the physical recording density of 4 581,9 ftpmm.

C.1.4 Repeat C.1.1 to C.1.3 for the physical recording densities of 763,7 ftpmm, 859,1 ftpmm, 981,8 ftpmm, 1 145,5 ftpmm, 1 374,6 ftpmm, 1 718,2 ftpmm, 2 291,0 ftpmm, 3 436,4 ftpmm, and 4 581,9 ftpmm.

C.2 Method for determining the Maximum Allowable Recorded Level

C.2.1 a.c. erase the Secondary Standard Reference Tape and record at 4 581,9 ftpmm, increasing the write current until the output on read equals, after applying the appropriate calibration factor, 120 % of the value noted in C.1.1.

C.2.2 The read output from this tape is the Maximum Allowable Recorded Level for the physical recording density of 4 581,9 ftpmm.

C.2.3 Repeat C.2.1 and C.2.2 for the physical recording densities of 763,7 ftpmm, 859,1 ftpmm, 981,8 ftpmm, 1 145,5 ftpmm, 1 374,6 ftpmm, 1 718,2 ftpmm, 2 291,0 ftpmm, 3 436,4 ftpmm and 4 581,9 ftpmm.

C.3 Limits for the recorded levels

As a history of excessive recording levels can impair the operation of the recording system used in this International Standard it is necessary to prescribe limits for the recording levels to which the tape has interchange. These levels are, for each of the physical recording densities of 763,7 ftpmm, 859,1 ftpmm, 981,8 ftpmm, 1 145,5 ftpmm, 1 374,6 ftpmm, 1 718,2 ftpmm, 2 291,0 ftpmm, 3 436,4 ftpmm and 4 581,9 ftpmm.

Note - It is recommended that a tape to be used for interchange should not have been previously recorded at levels higher than its Nominal Recorded Levels at the physical recording densities of 763,7 ftpmm, 859,1 ftpmm, 981,8 ftpmm, 1 145,5 ftpmm, 1 374,6 ftpmm, 1 718,2 ftpmm, 2 291,0 ftpmm, 3 436,4 ftpmm and 4 581,9 ftpmm.

© ISO/IEC 2003 – All rights reserved

Copyright International Organization for Standardization
Provided by IHS under license with ISO
No reproduction or networking permitted without license from IHS
Not for Resale

Annex D
(normative)

Representation of 16-bit words by 18-Channel bits patterns

The 16-bit words are represented with the most significant bit to the left and the least significant bit to the right. The 18-Channel bit patterns are be represented with the first recorded Channel bit shown to the left and with the last recorded Channel bit shown to the right.

The magnetic recording system chosen in this International Standard requires that the d.c. level of the recorded signals be maintained near 0. All 18-Channel bit patterns are either balanced to the d.c. level 0 or have a d.c. component. Each 18-Channel bit pattern is accompanied by an indicator Q which instructs the translator which of two alternative patterns should be selected for the next 18-Channel bit pattern in order to maintain the lowest possible d.c.

Q' is the Code Terminal information of the previous pattern

Q is the Code Terminal information of the current pattern

The whole table is too long (1821 pages) to be represented in printed form. Thus the full set of representations is available free of charge from the Sony site: http://www.sony.co.jp/en/Products/storagesolution/ait3-annex-d.txt.

The beginning of the table is shown below for information. All 16-bit and 18-Channel bits patterns are indicated in hexadecimal notation.

16-bit Words	Q'=0 Channel bits patterns	Q	Q'=1 Channel bits patterns	Q	Q'=2 Channel bits patterns	Q	Q'=3 Channel bits patterns	Q
(0000)	(06A84)	2	(1EA97)	0	(3957B)	3	(21568)	1
(0001)	(0A3D7)	3	(0A3DD)	3	(35C28)	2	(35C22)	2
(0002)	(0A3D6)	1	(0A3DC)	1	(35C29)	0	(35C23)	0
(0003)	(0A3D1)	3	(0A3D7)	3	(35C2E)	2	(35C28)	2
(0004)	(0A3D0)	1	(0A3D6)	1	(35C2F).	0	(35C29)	0
.	.	.	.	.	.	.	.	.
.	.	.	.	.	.	.	.	.
.	.	.	.	.	.	.	.	.

etc.

© ISO/IEC 2003 – All rights reserved
Copyright International Organization for Standardization
Provided by IHS under license with ISO
No reproduction or networking permitted without license from IHS
Not for Resale

Annex E
(normative)

Measurement of bit shift

The tape to be measured shall have been written by the tape drive used for data interchange.

The tape shall have been written in any mode compatible with system operation.

E.1 Reading equipment

The tape shall be read on any drive which supports a track straightness meeting the requirement of annex F.

There are no absolute requirements placed on the output voltage of the head. However, the head design, the rotary transformer, the pre-amplifier, the head-to-tape speed and the equalizer shall be chosen so as to avoid problems due to a low signal-to-noise ratio.

– **Read head**

gap length 0,15 µm ± 0,05 µm

angle of the head gap — The gap in the head of positive azimuth shall make an angle of + 25° 0' 0" ± 0° 15’ 0" with the axis of the scanner.

The gap in the head of negative azimuth shall make an angle of - 25° 0' 0" ± 0° 15’ 0" with the axis of the scanner.

– **Head-tape contact and read channel**

The stability of the head-tape contact during the signal capture period (see E.2), together with the overall frequency response of the head, the rotary transformer, the pre-amplifier and the equalizer shall be sufficient to give a Signal-to-Noise ratio of better than 10 dB.

E.2 Measurement method

Bit shift shall be measured using computational signal processing of a digitized record of the playback voltage waveform at the equalizer output. The signal capture period shall start with the first bit of the Main Data Zone No. 1 (see 15.1) and finish when at least 25 000 Channel bits of the Main Data Zone have been read.

The signal processing algorithm shall perform the following steps

1) Input the digitized waveform from the Main Data Zone into a timing extraction algorithm, e.g. a Fast Fourier Transform, which generates a series of fixed-interval time references for the nominal centres of the bit periods of the readback Channel bit signals from this zone. These references shall be sufficiently accurate that, when steps 2), 3) and 4) are executed, the bit error rate specified in 4) is achieved.

2) Extend this series of time references, at the same frequency and phase, into the remainder of the signal capture period. These references define the timing of the nominal centres of the bit periods of the readback Channel bit signals from the Main Data Zone.

3) Measure the playback voltage, to an accuracy of better than 2 %, at the nominal centre of each captured bit period from the Main Data Zone.

4) For each captured bit period from the Main Data Zone , deduce the state of the corresponding bit cell on the tape under test, by means of a detection method which has a bit error rate of less than 1 in 10 000. For each bit cell which is magnetized in the direction of head travel, assign to it a data value *D* of +1. For each bit cell which is magnetized in the direction opposite to head travel, assign to it a data value *D* of -1.

5) For each bit cell, form a vector of 4 elements. The elements shall be numbered 1, 2, 3 and 4. The value D_3 of the third element shall be the data value *D* of the current bit cell. The value D_4 of the fourth element shall be the data value *D* of the

© ISO/IEC 2003 – All rights reserved

Copyright International Organization for Standardization
Provided by IHS under license with ISO
No reproduction or networking permitted without license from IHS
Not for Resale

next bit cell. The values D_1 and D_2 respectively of the first and second elements shall be the data values D of the previous two bit cells. Thus, the vector has a vector value i which is one of a set of 16 possible vector values.

6) For each of the 16 vector values, compute the average V_i of the playback voltages, measured in step 3), of all bit cells the vectors of which have that vector value i.

7) Arrange the voltage averages and the data values to form 16 Volterra series, one per vector value. Each series shall be as defined below :

$V_i = A_{0000}$	(d.c. term)
$+ A_{0100} D_2 + A_{0010} D_3$	(signal terms)
$+ A_{1000} D_1 + A_{0001} D_4$	(linear ISI terms)
$+ A_{1100} D_1 D_2 + A_{0110} D_2 D_3 + A_{0011} D_3 D_4$	(non-linear ISI terms)
$+ A_{1010} D_1 D_3 + A_{0101} D_2 D_4 + A_{1001} D_1 D_4$	(more non-linear ISI terms)
$+ A_{1101} D_1 D_2 D_4 + A_{1011} D_1 D_3 D_4 + A_{1111} D_1 D_2 D_3 D_4$	(more non-linear ISI terms)
$+ A_{1110} D_1 D_2 D_3 + A_{0111} D_2 D_3 D_4$	(non-linear ISI terms associated with bit shift)

8) Obtain the Volterra coefficients A_{0000} to A_{1111} by solving the 16 simultaneous equations formed in step 7).

9) The Volterra coefficients which indicate non-linear inter-symbol interference corresponding to bit shift are A_{1110} and A_{0111}.

Note

The theoretical basis for this method is described in

Newby, P. and Wood, R., 1986

"The Effects of Nonlinear Distortion on Class IV Partial Response"

IEEE Transactions on Magnetics

Volume MAG-22, Number 5, September 1986, Page 1203

and an application of this method is described in

Williams, C.H., 1990

"The Measurement and Classification of Impairment for DVTR Transports"

8th Conference on Video, Audio and Data Recording

IEE Conference Publication No. 319, page 67

--`,,,`-`-`,,`,,`,`,,`---
© ISO/IEC 2003 – All rights reserved
Copyright International Organization for Standardization
Provided by IHS under license with ISO
No reproduction or networking permitted without license from IHS
Not for Resale

Annex F
(normative)

Method of measuring the straightness of track edges

F.1 Condition

The test piece shall be secured under a longitudinal tension between 0,04 N and 0,06 N.

F.2 Procedure

Define a rectangular box of 61,600 mm x 3,5 µm with its longitudinal axis at an angle α = 4,885 0° with the Tape Reference Edge and its centre on a line at a nominal distance of 4,556 5 mm from the Tape Reference Edge. Position this box over the leading edge of the track.

F.3 Requirement

Place the box, by varying its position only along the longitudinal axis of the tape, in such a position that the track's leading edge intersects its short sides only.

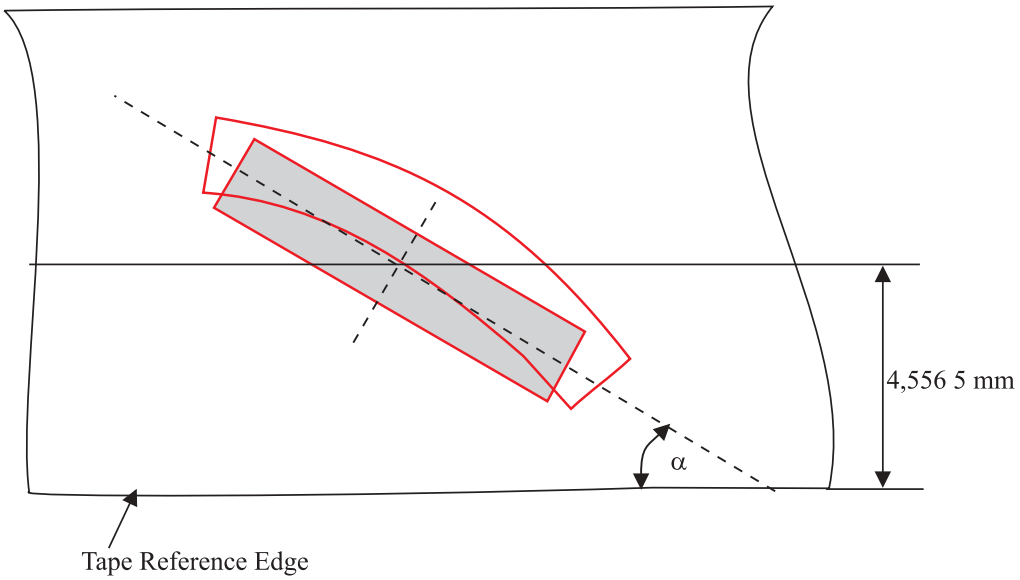

Figure F.1 - Track edge straightness

© ISO/IEC 2003 – All rights reserved
Copyright International Organization for Standardization
Provided by IHS under license with ISO
No reproduction or networking permitted without license from IHS
Not for Resale

Annex G
(normative)

ECC calculation

C1 shall be a GF(2^8) Reed-Solomon Code (64, 58, 7)

C2 shall be a GF(2^8) Reed-Solomon Code (56, 48, 9)

* C1 parity completes as 2-block with interleave by symbol.

The calculation on GF(2^8) is defined by the following polynomial:

$$G(x) = x^8 + x^4 + x^3 + x^2 + 1$$

$$\alpha = (00000010)$$

The interleave depth of C1 is two bytes, that of C2 is eight blocks. The ECC bytes shall satisfy

$$H_P \times V_P = 0$$

$$H_Q \times V_Q = 0$$

The generator polynomials shall be

$$G_P(x) = \prod_{i=0}^{i=5} (x - \alpha^i)$$

$$G_Q(x) = \prod_{i=0}^{i=7} (x - \alpha^i)$$

$$Hp = \begin{bmatrix} \alpha^0 & \alpha^0 & \alpha^0 & \alpha^0 & \cdots & \alpha^0 & \alpha^0 & \alpha^0 \\ \alpha^{63} & \alpha^{62} & \alpha^{61} & \alpha^{60} & \cdots & \alpha^2 & \alpha^1 & \alpha^0 \\ \alpha^{126} & \alpha^{124} & \alpha^{122} & \alpha^{120} & \cdots & \alpha^4 & \alpha^2 & \alpha^0 \\ \alpha^{189} & \alpha^{186} & \alpha^{183} & \alpha^{180} & \cdots & \alpha^6 & \alpha^3 & \alpha^0 \\ \alpha^{252} & \alpha^{248} & \alpha^{244} & \alpha^{240} & \cdots & \alpha^8 & \alpha^4 & \alpha^0 \\ \alpha^{315} & \alpha^{310} & \alpha^{305} & \alpha^{300} & \cdots & \alpha^{10} & \alpha^5 & \alpha^0 \end{bmatrix}$$

$$H_Q = \begin{bmatrix} \alpha^0 & \alpha^0 & \alpha^0 & \alpha^0 & \cdots & \alpha^0 & \alpha^0 & \alpha^0 \\ \alpha^{55} & \alpha^{54} & \alpha^{53} & \alpha^{52} & \cdots & \alpha^2 & \alpha^1 & \alpha^0 \\ \alpha^{110} & \alpha^{108} & \alpha^{106} & \alpha^{104} & \cdots & \alpha^4 & \alpha^2 & \alpha^0 \\ \alpha^{165} & \alpha^{162} & \alpha^{159} & \alpha^{156} & \cdots & \alpha^6 & \alpha^3 & \alpha^0 \\ \alpha^{220} & \alpha^{216} & \alpha^{212} & \alpha^{208} & \cdots & \alpha^8 & \alpha^4 & \alpha^0 \\ \alpha^{275} & \alpha^{270} & \alpha^{265} & \alpha^{260} & \cdots & \alpha^{10} & \alpha^5 & \alpha^0 \\ \alpha^{330} & \alpha^{324} & \alpha^{318} & \alpha^{312} & \cdots & \alpha^{12} & \alpha^6 & \alpha^0 \\ \alpha^{385} & \alpha^{378} & \alpha^{371} & \alpha^{364} & \cdots & \alpha^{14} & \alpha^7 & \alpha^0 \\ \alpha^{440} & \alpha^{432} & \alpha^{424} & \alpha^{416} & \cdots & \alpha^{16} & \alpha^8 & \alpha^0 \end{bmatrix}$$

© ISO/IEC 2003 – All rights reserved
Copyright International Organization for Standardization
Provided by IHS under license with ISO
No reproduction or networking permitted without license from IHS
Not for Resale

V_P =

D 2k,*l*
D 2k,*l*+2
D 2k,*l*+4
D 2k,*l*+6
D 2k,*l*+8
D 2k,*l*+10
D 2k,*l*+12
D 2k,*l*+14
D 2k,*l*+16
D 2k,*l*+18
D 2k,*l*+20
D 2k,*l*+22
D 2k,*l*+24
D 2k,*l*+26
D 2k,*l*+28
D 2k,*l*+30
D 2k,*l*+32
D 2k,*l*+34
D 2k,*l*+36
D 2k,*l*+38
D 2k,*l*+40
D 2k,*l*+42
D 2k,*l*+44
D 2k,*l*+46
D 2k,*l*+48
D 2k,*l*+50
D 2k,*l*+52
D 2k,*l*+54
D 2k,*l*+56
D 2k,*l*+58
D 2k,*l*+60
D 2k,*l*+62
D 2k+1,*l*+64
D 2k+1,*l*+66
D 2k+1,*l*+68
D 2k+1,*l*+70
D 2k+1,*l*+72
D 2k+1,*l*+74
D 2k+1,*l*+76
D 2k+1,*l*+78
D 2k+1,*l*+80
D 2k+1,*l*+82
D 2k+1,*l*+84
D 2k+1,*l*+86
D 2k+1,*l*+88
D 2k+1,*l*+90
D 2k+1,*l*+92
D 2k+1,*l*+94
D 2k+1,*l*+96
D 2k+1,*l*+98
D 2k+1,*l*+100
D 2k+1,*l*+102
D 2k+1,*l*+104
D 2k+1,*l*+106
D 2k+1,*l*+108
D 2k+1,*l*+110
D 2k+1,*l*+112
D 2k+1,*l*+114
P 2k+1,*l*+116
P 2k+1,*l*+118
P 2k+1,*l*+120
P 2k+1,*l*+122
P 2k+1,*l*+124
P 2k+1,*l*+126

V_Q =

Qm,n
Qm+6,n
Qm+12,n
Qm+18,n
Dm+24,n
Dm+30,n
Dm+36,n
Dm+42,n
Dm+48,n
Dm+54,n
Dm+60,n
Dm+66n
Dm+72,n
Dm+78,n
Dm+84,n
Dm+90,n
Dm+96,n
Dm+102,n
Dm+108,n
Dm+114,n
Dm+120,n
Dm+126,n
Dm+132,n
Dm+138,n
Dm+144,n
Dm+150,n
Dm+156,n
Dm+162,n
Dm+168,n
Dm+174,n
Dm+180,n
Dm+186,n
Dm+192,n
Dm+198,n
Dm+204,n
Dm+210,n
Dm+216,n
Dm+222,n
Dm+228,n
Dm+234,n
Dm+240,n
Dm+246,n
Dm+252,n
Dm+258,n
Dm+264,n
Dm+270n
Dm+276,n
Dm+282,n
Dm+288,n
Dm+294,n
Dm+300,n
Dm+306n
Qm+312,n
Qm+318,n
Qm+324,n
Qm+330,n

© ISO/IEC 2003 – All rights reserved

Copyright International Organization for Standardization
Provided by IHS under license with ISO
No reproduction or networking permitted without license from IHS
Not for Resale

where

P_{ij} = C1 bytes

Q_{ij} = C2 bytes

i = Block Number

j = Serial Number

For C1:

$k = 0,1, ..., 335$

$l = 0,1$

if k = 0 to 23, or 312 to 335 then D_{ij} in Vp is read as Q_{ij}

For C2:

$0 \leq m \leq 5$

$0 \leq n \leq 127$

The 128 bytes contained in each Block are identified by a Serial Number in the range 0 to 127. Blocks are identified by Block Numbers in the range 0 to 335.

© ISO/IEC 2003 – All rights reserved
Copyright International Organization for Standardization
Provided by IHS under license with ISO
No reproduction or networking permitted without license from IHS
Not for Resale

Annex H
(informative)

Recommendations for transportation

H.1 Environment

It is recommended that during transportation the cartridges are kept within the following conditions:

temperature	: - 40 °C to 45 °C
relative humidity	: 5 % to 80 %
wet bulb temperature	: 26 °C max.

There shall be no condensation in or on the cartridge.

H.2 Hazards

Transportation of recorded cartridges involves three basic potential hazards.

H.2.1 Impact loads and vibrations

The following recommendations should minimize damage during transportation.

a) Avoid mechanical loads that would distort the cartridge shape.

b) Avoid dropping the cartridge more than 1 m.

c) Cartridges should be fitted into a rigid box containing adequate shock-absorbent material.

d) The final box must have a clean interior and a construction that provides sealing to prevent the ingress of dirt and water.

e) The orientation of the cartridges within the final box should be such that the axes of the tape reels are horizontal.

f) The final box should be clearly marked to indicate its correct orientation.

H.2.2 Extremes of temperature and humidity

a) Extreme changes in temperature and humidity should be avoided whenever possible.

b) Whenever a cartridge is received it should be conditioned in the operating environment for a period of at least 24 h.

H.2.3 Effects of stray magnetic fields

A nominal spacing of not less than 80 mm should exist between the cartridge and the outer surface of the shipping container. This should minimize the risk of corruption.

© ISO/IEC 2003 – All rights reserved

Copyright International Organization for Standardization
Provided by IHS under license with ISO
No reproduction or networking permitted without license from IHS
Not for Resale

Annex J
(informative)

Read-After-Write

Read-After-Write (RAW) is a technique by which a Frame is read immediately after being written, examined to determine if it was written successfully, and re-written if not. The unit of RAW is a Frame. The RAW technique is applicable only in the Data Area of a tape, and is not applied to Amble Frames. Where RAW is applicable, it may be applied or not applied to individual Frames, regardless of whether or not it is applied to other Frames. When a Frame is identified, during a Read-After-Write check, as having been unsuccessfully written, it is rewritten further along the tape, i.e. the original Frame is not overwritten by the re-written Frame.

The primary intent of the RAW check is the detection of Frames containing errors of significant size and/or quantity, e.g. as caused by non-trivial media defects. Consequently, where RAW is applied it is not necessary that all Channel bits be read correctly to avoid a re-write. Instead, the minimum requirement needs to be only that the quality of the recording and the quantity of correctly decoded data is such that the data of the entire Frame is recoverable with sufficient margin for reliable data interchange.

The actual performance of a Frame against this requirement can be assessed in a number of ways, for example by measuring the length, severity and/or distribution of missing pulses, counting the number of errors detected by C1 and/or C2, comparing written and read checksums, comparing written and read data on a sampled or full time basis.

Where a Frame has been rewritten multiple instances of it will exist. It is possible that a subsequent read will successfully recover data from more than one instance of a Frame. In such case, it is recommended that the last successfully recovered instance be used, since previous ones may have been considered unsuccessfully written.

© ISO/IEC 2003 – All rights reserved
Copyright International Organization for Standardization
Provided by IHS under license with ISO
No reproduction or networking permitted without license from IHS
Not for Resale

Annex K
(informative)

Basic Group No. 0

Byte Position	Field Identifier	Description of Contents
0 to 2 405 375	Vendor Unique	This International Standard does not specify the content of Basic Group No. 0. It remains undefined for interchange.

© ISO/IEC 2003 – All rights reserved

Copyright International Organization for Standardization
Provided by IHS under license with ISO
No reproduction or networking permitted without license from IHS
Not for Resale

Annex L
(informative)

Chip for the AIT-3 format

The International Organization for Standardization (ISO) and the International Electrotechnical Commission (IEC) draw attention to the fact that it is claimed that compliance with this International Standard may involve the use of patents concerning the chip for the AIT-3 format.

ISO and IEC take no position concerning the evidence, validity and scope of these patent rights.

The holder of this patent right has assured ISO and IEC that he is willing to negotiate licences under reasonable and non-discriminatory terms and conditions with applicants throughout the world. In this respect, the statement of the holder of this patent right is registered with ISO and IEC. Information may be obtained from:

Sony Corporation
Broadband Solution Network Company
Tape Streamer Div.
6-7-35 Kitashinagawa, Shinagawa-ku, Tokyo 141, Japan

Parts Number: RFA-T6

Attention is drawn to the possibility that some of the elements of this International Standard may be the subject of patent rights other than those identified above. ISO and IEC shall not be held responsible for identifying any or all such patent rights.

© ISO/IEC 2003 – All rights reserved
Copyright International Organization for Standardization
Provided by IHS under license with ISO
No reproduction or networking permitted without license from IHS
Not for Resale

Annex M
(informative)

Generation of EDC bytes for the Error Detecting Code for G2 Sub-Groups

Figure M.1 shows the feedback connections of a bit shift register which may be used to generate the EDC bytes for the Error Detecting Code for G2 Sub-Groups.

Prior to the operation, all positions of the shift register are set to ZERO. Input data are added (exclusive OR) to the contents of position C_{15} of the register to form a feedback. This feedback is in its turn added (exclusive OR) to the contents of position C_4 and position C_{11}.

On shifting, the outputs of the exclusive OR gates are entered respectively into positions C_0, C_5 and C_{12}. After the last data bit has been added, the register is shifted once more as specified above.

The register then contains the EDC bytes.

If further shifting is to take place during the writing of the EDC bytes, the control signal inhibits exclusive OR operations.

To check for errors when reading, the data bits are added into the shift register in exactly the same manner as they were during writing. After the data, the EDC bytes are also entered into the shift register as if they were data. After the final shift, the register contents will be set to all ZEROs if the record does not contain errors.

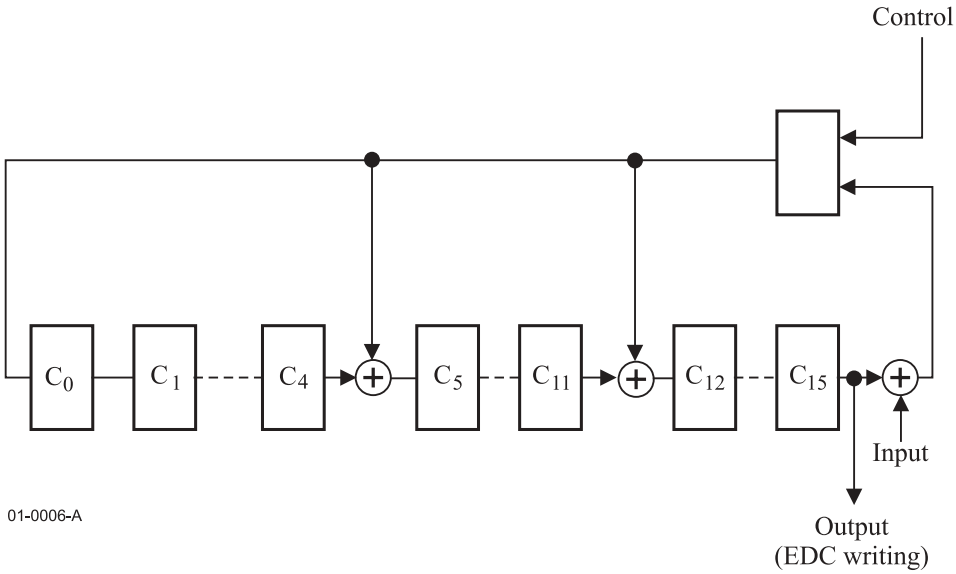

Figure M.1 – EDC shift register

--`,,`-`-`,,`,,`,`,,`---
© ISO/IEC 2003 – All rights reserved
Copyright International Organization for Standardization
Provided by IHS under license with ISO
No reproduction or networking permitted without license from IHS
Not for Resale

ICS 35.220.22

Price based on 121 pages

--`,,,`-`-`,,`,,`,`,,`---

© ISO/IEC 2003 – All rights reserved

Copyright International Organization for Standardization
Provided by IHS under license with ISO
No reproduction or networking permitted without license from IHS

Not for Resale