INTERNATIONAL STANDARD

ISO/IEC 23289

First edition
2002-12-15

Information technology — Telecommunications and information exchange between systems — Corporate telecommunication networks — Signalling interworking between QSIG and H.323 — Basic services

Technologies de l'information — Télécommunications et échange d'information entre systèmes — Réseaux de télécommunications corporatifs — Interaction de signalisation entre QSIG et H.323 — Services de base

Reference number
ISO/IEC 23289:2002(E)

© ISO/IEC 2002

Copyright International Organization for Standardization
Provided by IHS under license with ISO
No reproduction or networking permitted without license from IHS

Not for Resale

PDF disclaimer

This PDF file may contain embedded typefaces. In accordance with Adobe's licensing policy, this file may be printed or viewed but shall not be edited unless the typefaces which are embedded are licensed to and installed on the computer performing the editing. In downloading this file, parties accept therein the responsibility of not infringing Adobe's licensing policy. The ISO Central Secretariat accepts no liability in this area.

Adobe is a trademark of Adobe Systems Incorporated.

Details of the software products used to create this PDF file can be found in the General Info relative to the file; the PDF-creation parameters were optimized for printing. Every care has been taken to ensure that the file is suitable for use by ISO member bodies. In the unlikely event that a problem relating to it is found, please inform the Central Secretariat at the address given below.

© ISO/IEC 2002

All rights reserved. Unless otherwise specified, no part of this publication may be reproduced or utilized in any form or by any means, electronic or mechanical, including photocopying and microfilm, without permission in writing from either ISO at the address below or ISO's member body in the country of the requester.

ISO copyright office
Case postale 56 • CH-1211 Geneva 20
Tel. + 41 22 749 01 11
Fax + 41 22 749 09 47
E-mail copyright@iso.org
Web www.iso.org

Published in Switzerland

Copyright International Organization for Standardization
Provided by IHS under license with ISO
No reproduction or networking permitted without license from IHS

© ISO/IEC 2002 — All rights reserved

Not for Resale

Contents

Foreword v

Introduction vi

1 Scope 1

2 Conformance 1

3 Normative references 1

4 Definitions 2

4.1 External definitions 2
4.2 Other definitions 2

4.2.1 Gateway 2
4.2.2 IP network 2
4.2.3 Ring-back tone 2

5 Acronyms 2

6 Architecture 3

7 General requirements 4

8 Message mapping requirements 4

8.1 Message validation and handling of protocol errors 4
8.2 Call establishment from QSIG to H.323 5

8.2.1 Call establishment from QSIG to H.323 using admission procedures 5
8.2.2 Call establishment from QSIG to H.323 without admission procedures 8

8.3 Call establishment from H.323 to QSIG 11

8.3.1 Receipt of an H.225.0 SETUP message 11
8.3.2 Additional messages relating to overlap sending 12
8.3.3 Receipt of a QSIG CALL PROCEEDING message 12
8.3.4 Receipt of a QSIG ALERTING message 12
8.3.5 Receipt of a QSIG CONNECT message 12

8.4 PROGRESS messages and Progress indicator information elements 13

8.4.1 Receipt of a Progress indicator information element in a QSIG message 13
8.4.2 Receipt of a Progress indicator information element in an H.225.0 message 13
8.4.3 Transmission of Progress indicator information element in support of gateway-provided ring-back tone 13

8.5 Call clearing 13

8.5.1 Call clearing initiated by QSIG 13
8.5.2 Call clearing initiated by H.323 13

9 Numbering requirements 13

9.1 Supported numbering plans and types of number 13
9.2 Mapping numbers from QSIG to H.323 14
9.3 Mapping numbers from H.323 to QSIG 14
9.4 Handling of presentation and screening indicators 15
9.5 Handling of subaddresses 15

10 Security requirements 15

© ISO/IEC 2002 - All rights reserved

Copyright International Organization for Standardization
Provided by IHS under license with ISO
No reproduction or networking permitted without license from IHS
Not for Resale

11 Requirements for support of basic services **15**

11.1 Calls from QSIG to H.323 **16**
11.2 Calls from H.323 to QSIG **16**

12 Media channel establishment **17**

13 Requirements for the support of group 3 fax in accordance with H.323 annex D **17**

13.1 Start of fax transmission **17**
13.2 End of fax transmission **18**

14 Requirements for the support of DTMF **18**

15 Requirements for the provision of ring-back tone **18**

Annexes

A - Implementation Conformance Statement (ICS) proforma **19**

B - Example message sequences **34**

© ISO/IEC 2002 — All rights reserved
Copyright International Organization for Standardization
Provided by IHS under license with ISO
No reproduction or networking permitted without license from IHS
Not for Resale

Foreword

ISO (the International Organization for Standardization) and IEC (the International Electrotechnical Commission) form the specialized system for worldwide standardization. National bodies that are members of ISO or IEC participate in the development of International Standards through technical committees established by the respective organization to deal with particular fields of technical activity. ISO and IEC technical committees collaborate in fields of mutual interest. Other international organizations, governmental and non-governmental, in liaison with ISO and IEC, also take part in the work. In the field of information technology, ISO and IEC have established a joint technical committee, ISO/IEC JTC 1.

International Standards are drafted in accordance with the rules given in the ISO/IEC Directives, Part 2.

The main task of the joint technical committee is to prepare International Standards. Draft International Standards adopted by the joint technical committee are circulated to national bodies for voting. Publication as an International Standard requires approval by at least 75 % of the national bodies casting a vote.

Attention is drawn to the possibility that some of the elements of this document may be the subject of patent rights. ISO and IEC shall not be held responsible for identifying any or all such patent rights.

ISO/IEC 23289 was prepared by ECMA (as ECMA-332) and was adopted, under a special “fast-track procedure”, by Joint Technical Committee ISO/IEC JTC 1, *Information technology*, in parallel with its approval by national bodies of ISO and IEC.

© ISO/IEC 2002 · All rights reserved

Copyright International Organization for Standardization
Provided by IHS under license with ISO
No reproduction or networking permitted without license from IHS
Not for Resale

Introduction

This International Standard is one of a series of Standards defining the interworking of services and signalling protocols deployed in corporate telecommunication networks (CNs). The series uses telecommunication concepts as developed by ITU-T and conforms to the framework of International Standards on Open Systems Interconnection as defined by ISO/IEC.

This International Standard defines the signalling protocol interworking for basic services between a Private Integrated Services Network (PISN) and a packet-based private telecommunications network based on the Internet Protocol (IP). It is further assumed that the protocol for the PISN part is that defined for the Q reference point (QSIG) and that the protocols for the IP-based network are based on ITU-T Recommendation H.323.

This International Standard is based upon the practical experience of ECMA member companies and the results of their active and continuous participation in the work of ISO/IEC JTC 1, ITU-T, ETSI and other international and national standardization bodies. It represents a pragmatic and widely based consensus.

Copyright International Organization for Standardization
Provided by IHS under license with ISO
No reproduction or networking permitted without license from IHS
Not for Resale

© ISO/IEC 2002 — All rights reserved

Information technology - Telecommunications and information exchange between systems - Corporate telecommunication networks - Signalling interworking between QSIG and H.323 - Basic services

1 Scope

This International Standard specifies signalling interworking between "QSIG" and "H.323" in support of basic services within a corporate telecommunication network (CN).

"QSIG" is a signalling protocol that operates at the Q reference point between Private Integrated services Network eXchange (PINX) within a Private Integrated Services Network (PISN). The Q reference point is defined in ISO/IEC 11579-1. A PISN provides circuit-switched basic services and supplementary services to its users. QSIG is specified in other International Standards, in particular ISO/IEC 11572 (call control in support of basic services).

"H.323" is a set of signalling protocols for the support of voice or multimedia communication within a packet network, in particular a packet network that uses the Internet Protocol (IP) as its network layer protocol (IP network). H.323 signalling protocols operate between endpoints in an IP network, either indirectly via one or more gatekeepers, or directly. An endpoint can be a terminal or a gateway to another network. H.323 is an "umbrella" recommendation referring to various ITU-T recommendations, in particular recommendations H.225.0 and H.245 (basic communication capabilities).

This International Standard specifies signalling interworking for basic services that provide a bidirectional transfer capability for speech, DTMF, facsimile and modem media between a PISN employing QSIG and a private IP network employing H.323. This International Standard specifies requirements for establishing user information (audio) connections between the PISN and the IP network, but protocols for transmitting audio in the IP network and for signalling in order to establish and close down audio transmission in the IP network are outside the scope of this International Standard. Supplementary services are outside the scope of this International Standard.

Interworking between QSIG and H.323 permits a call originating at a user of a PISN to terminate at a user of a private IP network, or a call originating at a user of a private IP network to terminate at a user of a PISN.

Interworking between a PISN employing QSIG and a public IP network employing H.323 is outside the scope of this International Standard. However, the functionality specified in this International Standard is in principle applicable to such a scenario when deployed in conjunction with other relevant functionality (e.g., number translation, security functions, etc.).

Although two such gateways can operate as peers on either side of an IP network (whereby the IP network provides interconnection between two PISNs), special support for this situation (e.g., tunnelling of QSIG information through the IP network) is outside the scope of this International Standard.

Although two such gateways can operate as peers on either side of a PISN (whereby the PISN provides interconnection between two IP networks), special support for this situation (e.g., tunnelling of H.323 information through the PISN) is outside the scope of this International Standard.

This International Standard is applicable to any interworking unit that can act as a gateway between a PISN employing QSIG and a private IP network employing H.323.

2 Conformance

In order to conform to this International Standard, a gateway shall satisfy the requirements identified in the Implementation Conformance Statement (ICS) proforma in annex A.

3 Normative references

The following referenced documents are indispensable for the application of this document. For dated references, only the edition cited applies. For undated references, the latest edition of the referenced document (including any amendments) applies.

ISO/IEC 11571:1998, *Information technology - Telecommunications and information exchange between systems - Private Integrated Services Networks - Addressing*

© ISO/IEC 2002 - All rights reserved

Copyright International Organization for Standardization
Provided by IHS under license with ISO
No reproduction or networking permitted without license from IHS
Not for Resale

ISO/IEC 11572:2000, *Information technology - Telecommunications and information exchange between systems - Private Integrated Services Network - Circuit mode bearer services - Inter-exchange signalling procedures and protocol*

ISO/IEC 11579-1:1994, *Information technology - Telecommunications and information exchange between systems - Private integrated services network - Part 1: Reference configuration for PISN Exchanges (PINX)*

ISO/IEC 17310:2000, *Information technology - Telecommunications and information exchange between systems - Private Integrated Services Network - Mapping functions for the employment of 64 kbit/s circuit mode connections with 16 kbit/s sub-multiplexing*

ISO/IEC 17311:2000, *Information technology - Telecommunications and information exchange between systems - Private Integrated Services Network - Mapping functions for the employment of 64 kbit/s circuit mode connections with 8 kbit/s sub-multiplexing*

ISO/IEC 21409:2001; *Information technology - Telecommunications and information exchange between systems - Corporate telecommunication networks - Signalling interworking between QSIG and H.323 - Generic functional protocol for the support of supplementary services*

ITU-T Rec. H.225.0 version 4, *Call signalling protocols and media stream packetization for packet-based multimedia communication systems (11/2000)*

ITU-T Rec. H.235 version 2, *Security and encryption for H-Series (H.323 and other H.245-based) multimedia terminals (11/2000)*

ITU-T Rec. H.245 version 7, *Control protocol for multimedia communication (11/2000)*

ITU-T Rec. H.323 version 4, *Packet-based multimedia communications systems (11/2000)*

4 Definitions

For the purposes of this document, the following definitions apply.

4.1 External definitions

This International Standard uses the following terms defined in other documents:

- Call (ISO/IEC 21409)
- Corporate telecommunication network (CN) (ISO/IEC 21409)
- Endpoint (ITU-T Rec. H.323)
- Gatekeeper (ITU-T Rec. H.323)
- Private Integrated Services Network (PISN) (ISO/IEC 21409)
- Private Integrated services Network eXchange (PINX) (ISO/IEC 11579-1)

Additionally the definitions in ISO/IEC 11572 and ITU-T Recommendation H.323 apply as appropriate.

4.2 Other definitions

4.2.1 Gateway

A gateway as defined in H.323 specifically for the purpose of interworking with a network employing QSIG.

4.2.2 IP network

A network, unless otherwise stated a CN, offering connectionless packet-mode services based on the Internet Protocol (IP) as the network layer protocol.

4.2.3 Ring-back tone

An in-band tone or announcement played to the calling user during the alerting of the called user.

5 Acronyms

CN	Corporate telecommunication network
ICS	Implementation Conformance Statement
IP	Internet Protocol

© ISO/IEC 2002 – All rights reserved
Copyright International Organization for Standardization
Provided by IHS under license with ISO
No reproduction or networking permitted without license from IHS
Not for Resale

PINX	Private Integrated services Network eXchange
PISN	Private Integrated Services Network

6 Architecture

This International Standard specifies signalling protocol interworking aspects of a gateway between a PISN employing QSIG signalling and an IP network employing H.323 signalling. The gateway appears as a PINX to other PINXs in the PISN. The gateway appears as an H.323 endpoint to other H.323 entities in the IP network, these being:

- other endpoints (terminals, gateways or multipoint control units) that originate calls via the gateway to the PISN and terminate calls via the gateway from the PISN;
- gatekeepers, including the gatekeeper with which the gateway registers and other gatekeepers involved in call routing.

This environment is illustrated in figure 1.

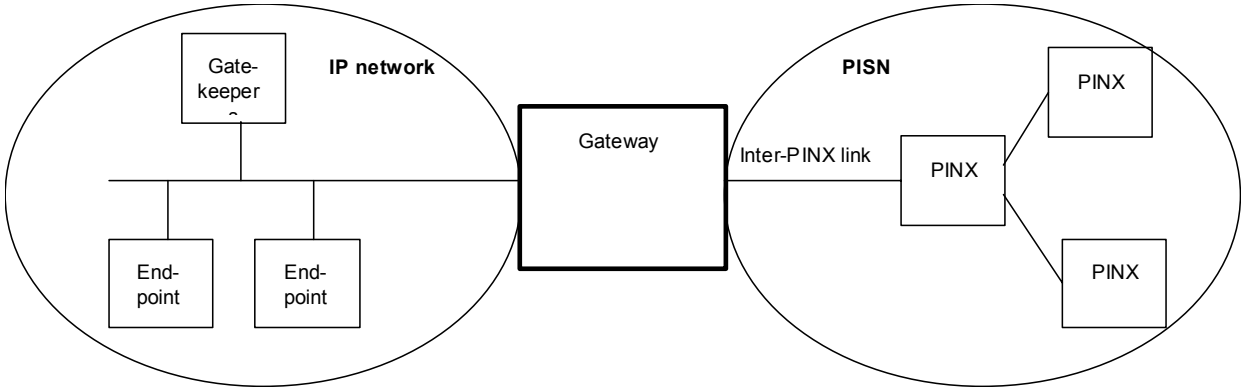

Figure 1 – Environment

In addition to the signalling interworking functionality specified in this International Standard, it is assumed that the gateway also includes the following functionality:

- one or more physical interfaces on the PISN side supporting one or more inter-PINX links, each link providing one or more constant bit rate channels for media information and a reliable layer 2 connection for transporting QSIG signalling messages; and
- one or more physical interfaces on the IP network side supporting, through layer 1 and layer 2 protocols, IP as the network layer protocol and UDP and TCP as transport layer protocols, these being used for the transport of media information and H.323 signalling protocols;
- a means of transferring media information in each direction between the PISN and the IP network, including, as a minimum, packetization of media information sent to the IP network and de-packetization of media information received from the IP network.

NOTE - The gateway can be decomposed as described in 6.3.1 of H.323. In this case, the signalling interworking aspects of the gateway, as specified in this International Standard, can be expected to reside in the Media Gateway Controller (MGC).

The protocol model relevant to signalling interworking functionality of a gateway is shown in figure 2.

--`,,```,,,,````-`-`,,`,,`,`,,`---

© ISO/IEC 2002 – All rights reserved

Copyright International Organization for Standardization
Provided by IHS under license with ISO
No reproduction or networking permitted without license from IHS
Not for Resale

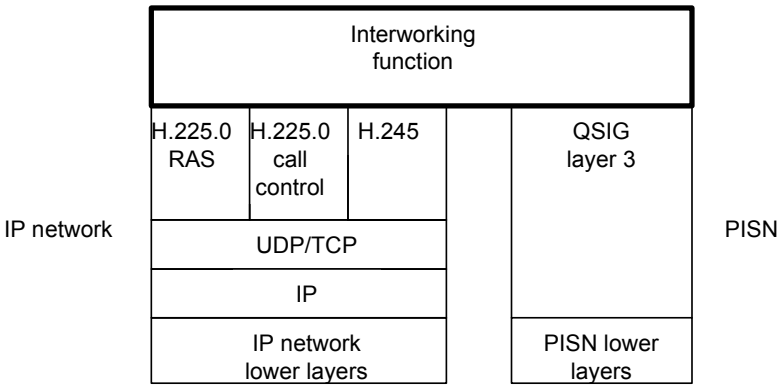

Figure 2 – Protocol model

The relevant signalling protocols on the IP network side of the gateway are:

- H.225.0 Registration, Admission and Status (RAS);
- H.225.0 call control, for the purpose of establishing and clearing down sessions between endpoints; and
- H.245, for the purpose of supervising resources during a session.

The interworking function therefore provides interworking between QSIG on the PISN side and H.225.0 RAS, H.225.0 call control and H.245 on the IP network side.

7 General requirements

In order to conform to this International Standard, a gateway shall support QSIG in accordance with ISO/IEC 11572 and shall support H.323 in accordance with H.323 version 4 or later (including H.225.0 version 4 or later and H.245 version 7 or later). The gateway shall be able to interoperate with other H.323 entities in accordance with the provisions of H.323 version 4.

The gateway shall support calls from QSIG to an H.323 endpoint and calls from an H.323 endpoint to QSIG.

The gateway shall be able to discover and register with a gatekeeper. The means of doing this is outside the scope of this International Standard, but should be in accordance with H.323 RAS procedures. The procedures specified in this International Standard for call establishment apply after successful registration.

The gateway may also be able to operate without registering with a gatekeeper. In this case the means by which the gateway maps QSIG numbers to IP addresses for routing calls from QSIG to an H.323 endpoint is outside the scope of this International Standard.

For operation with a gatekeeper, the gateway shall be able to employ admission and disengage procedures. The gateway may support pre-granted admission procedures.

For operation with a gatekeeper, the gateway shall be able to support both direct call signalling and gatekeeper-routed call signalling. Unless pre-granted admission procedures apply, choice of call signalling method shall be in accordance with instructions from the gatekeeper at the time of admission.

8 Message mapping requirements

8.1 Message validation and handling of protocol errors

The gateway shall validate received QSIG messages in accordance with the requirements of ISO/IEC 11572 and shall act in accordance with ISO/IEC 11572 on detection of a QSIG protocol error. The gateway shall validate received H.225.0 messages in accordance with the requirements of ITU-T recommendation H.323 and H.225.0 and shall act in accordance with H.323 and H.225.0 on detection of an H.225.0 protocol error. Requirements of this clause for acting on a received QSIG or H.225.0 message apply only to a received message that has been successfully validated.

NOTE - These rules mean that an error detected in a received message will not be propagated to the other side of the gateway. However, there can be an indirect impact on the other side of the gateway, e.g., the initiation of call clearing procedures.

The gateway shall handle the QSIG RESTART, RESTART ACKNOWLEDGE, STATUS and STATUS ENQUIRY messages and the QSIG Restart indicator and Call state information elements in accordance with ISO/IEC 11572 and shall not propagate these items to the H.323 side of the gateway.

© ISO/IEC 2002 – All rights reserved
Copyright International Organization for Standardization
Provided by IHS under license with ISO
No reproduction or networking permitted without license from IHS
Not for Resale

NOTE - There can, however, be an indirect impact on the H.323 side of the gateway, e.g., the initiation of call clearing procedures.

The gateway shall handle the QSIG Channel identification information element in accordance with ISO/IEC 11572 and shall not propagate this information element to the H.323 side of the gateway.

The gateway shall handle locally any QSIG information elements from codesets other than codeset 0 and shall not propagate these information elements to the H.323 side of the gateway.

The QSIG Facility and Notification indicator information elements are outside the scope of ISO/IEC 11572 and are therefore outside the scope of this present International Standard.

The gateway shall handle the H.225.0 STATUS and STATUS INQUIRY messages and the H.225.0 Call state information element in accordance with H.323 and H.225.0 and shall not propagate these items to the QSIG side of the gateway.

NOTE - There can, however, be an indirect impact on the QSIG side of the gateway, e.g., the initiation of call clearing procedures.

The gateway shall handle locally any H.225.0 messages and information elements that do not have QSIG equivalents specified in ISO/IEC 11572 (e.g., USER INFORMATION message, Display information element) and shall not propagate these items to the QSIG side of the gateway.

Interworking requirements for other messages and information elements are specified in the remainder of this International Standard.

8.2 Call establishment from QSIG to H.323

The gateway shall support call establishment using admission procedures as specified in 8.2.1. The gateway may also support call establishment without admission procedures as specified in 8.2.2 for use in the following circumstances:

– if the gateway has not registered with a gatekeeper; or

– if the gateway has registered with a gatekeeper and pre-granted admission applies for H.323 calls established by the gateway.

8.2.1 Call establishment from QSIG to H.323 using admission procedures

The gateway shall support call establishment using en bloc sending as specified in 8.2.1.1. The gateway shall support call establishment using QSIG overlap sending either:

– by digit collection and the use of H.323 en bloc sending, as specified in 8.2.1.2; and/or

– by using H.323 overlap sending, as specified in 8.2.1.3.

Examples of message sequences are shown in B.2 in annex B.

8.2.1.1 Call establishment from QSIG to H.323 using admission procedures and en bloc sending

The following procedures apply when the gateway receives a QSIG SETUP message containing a Sending complete information element or the gateway receives a QSIG SETUP message and is able to determine that the number in the Called party number information element is complete.

NOTE - The means by which the gateway determines the number to be complete is an implementation matter. It can involve knowledge of the numbering plan and/or the use of inter-digit timer expiry.

8.2.1.1.1 Receipt of QSIG SETUP message

On receipt of a QSIG SETUP message containing a number that the gateway determines to be complete in the Called party number information element, or containing a Sending complete information element if the gateway is unable to determine whether the number is complete, the gateway shall transmit an H.225.0 ARQ message to the gatekeeper. The gateway shall include the contents of the QSIG SETUP message Called party number information element in the destinationInfo element of the ARQ message using choice partyNumber. The gateway shall also transmit a QSIG CALL PROCEEDING message.

On receipt of a QSIG SETUP message containing a Sending complete information element and a number that the gateway determines to be incomplete in the Called party number information element, the gateway shall initiate QSIG call clearing procedures using cause number 28 “invalid number format (address incomplete)”.

8.2.1.1.2 Receipt of H.225.0 ACF message

If in response to an H.225.0 ARQ message for a call from QSIG the gateway receives an H.225.0 ACF message, the gateway shall transmit an H.225.0 SETUP message to the transport address contained in the destCallSignallingAddress element of the ACF message.

© ISO/IEC 2002 – All rights reserved

Copyright International Organization for Standardization
Provided by IHS under license with ISO
No reproduction or networking permitted without license from IHS
Not for Resale

For the Called party number information element and/or the destinationAddress element in the H.225.0 SETUP (see 9.2), the gateway shall use the contents of the destinationInfo element, if present in the ACF message.

The gateway shall either include element canOverlapSend with value FALSE in the H.225.0 SETUP message or omit the element.

8.2.1.1.3 Receipt of H.225.0 ARJ message

If in response to an H.225.0 ARQ message for a call from QSIG the gateway receives an H.225.0 ARJ message, the gateway shall initiate QSIG call clearing procedures. The gateway shall derive the QSIG cause number used from the rejectReason value in the H.225.0 ARJ message as specified in table 1. For rejectReason values not in table 1, the choice of appropriate QSIG cause number is an implementation matter (e.g., 31 "normal unspecified" or 41 "temporary failure").

Table 1 – Mapping of rejectReason values to cause numbers

H.225.0 rejectReason value in ARJ	QSIG cause number
calledPartyNotRegistered	20 "subscriber absent"
requestDenied	58 "bearer capability not presently available"
resourceUnavailable	47 "resource unavailable, unspecified"
qosControlNotSupported	49 "Quality of Service not available"
incompleteAddress	28 “invalid number format (address incomplete)”
exceedsCallCapacity	17 "user busy"

8.2.1.1.4 Receipt of an H.225.0 CALL PROCEEDING message

If the gateway receives an H.225.0 CALL PROCEEDING message, no action need be taken.

8.2.1.1.5 Receipt of an H.225.0 ALERTING message

If the gateway receives an H.225.0 ALERTING message it shall send a QSIG ALERTING message.

8.2.1.1.6 Receipt of an H.225.0 CONNECT message

If the gateway receives an H.225.0 CONNECT message it shall send a QSIG CONNECT message.

8.2.1.2 Call establishment from QSIG to H.323 using admission procedures and overlap sending in QSIG only

The following procedures apply when the gateway receives a QSIG SETUP message containing no Sending complete information element, is able to determine that the number in the Called party number information element is incomplete and is able, as further digits are received, to determine when the number is complete.

NOTE – The means by which the gateway determines the number to be complete is an implementation matter. It can involve knowledge of the numbering plan and/or the use of inter-digit timer expiry.

8.2.1.2.1 Receipt of QSIG SETUP message

On receipt of a QSIG SETUP message containing no Sending complete information element, if the gateway determines that the number in the Called party number information element is incomplete it shall transmit a QSIG SETUP ACKNOWLEDGE message and await receipt of further number digits.

8.2.1.2.2 Receipt of QSIG INFORMATION message

On receipt of a QSIG INFORMATION message while awaiting further number digits, the gateway shall append any number digits in the Called party number information element to those number digits already received and determine whether the resulting number is complete. If still incomplete and there is no Sending complete information element in the QSIG INFORMATION message, the gateway shall await further QSIG INFORMATION messages. If the number is still incomplete and the Sending complete information element is present in the QSIG INFORMATION message, the gateway shall initiate QSIG call clearing procedures using cause number 28 “invalid number format (address incomplete)”.

8.2.1.2.3 Transmission of H.225.0 ARQ message

When the gateway determines that the number received is complete, it shall transmit an H.225.0 ARQ message to the gatekeeper with the contents of the Called party number information element from the QSIG SETUP message and appended

© ISO/IEC 2002 – All rights reserved
Copyright International Organization for Standardization
Provided by IHS under license with ISO
No reproduction or networking permitted without license from IHS
Not for Resale

number digits from QSIG INFORMATION messages in the destinationInfo element of the ARQ using choice partyNumber. The gateway shall also transmit a QSIG CALL PROCEEDING message.

8.2.1.2.4 Receipt of H.225.0 ACF message

The requirements of 8.2.1.1.2 apply.

8.2.1.2.5 Receipt of H.225.0 ARJ message

The requirements of 8.2.1.1.3 apply.

8.2.1.2.6 Receipt of an H.225.0 CALL PROCEEDING message

The requirements of 8.2.1.1.4 apply.

8.2.1.2.7 Receipt of an H.225.0 ALERTING message

The requirements of 8.2.1.1.5 apply.

8.2.1.2.8 Receipt of an H.225.0 CONNECT message

The requirements of 8.2.1.1.6 apply.

8.2.1.3 Call establishment from QSIG to H.323 using admission procedures and overlap sending in both QSIG and H.323

The following procedures apply when the gateway receives a QSIG SETUP message containing no Sending complete information element, is unable to determine whether the number in the Called party number information element is complete and is unable, as further digits are received, to determine when the number is complete.

8.2.1.3.1 Receipt of QSIG SETUP message

On receipt of a QSIG SETUP message containing no Sending complete information element, if the gateway is unable to determine whether the number in the Called party number information element is complete, the gateway shall transmit an H.225.0 ARQ message to the gatekeeper in accordance with 8.2.1.3.2. The gateway shall also transmit a QSIG SETUP ACKNOWLEDGE message.

8.2.1.3.2 Transmission of H.225.0 ARQ message

When transmitting an H.225.0 ARQ message to the gatekeeper, the gateway shall place the contents of the Called party number information element from the QSIG SETUP message and appended number digits from any QSIG INFORMATION messages in the destinationInfo element of the ARQ message using choice partyNumber.

NOTE - Appended number digits from QSIG INFORMATION messages apply only if this is not the first time an ARQ is sent (see 8.2.1.3.5 and 8.2.1.3.6).

8.2.1.3.3 Receipt of QSIG INFORMATION message while awaiting response to H.225.0 ARQ message

On receipt of a QSIG INFORMATION message while awaiting a response to an H.225.0 ARQ message, the gateway shall save the number digits from the Called party number information element. If the QSIG INFORMATION message contains a Sending complete information element, the gateway shall transmit a QSIG CALL PROCEEDING message.

8.2.1.3.4 Receipt of H.225.0 ACF message

If in response to an H.225.0 ARQ message for a call from QSIG the gateway receives an H.225.0 ACF message, the gateway shall transmit an H.225.0 SETUP message to the transport address contained in the destCallSignallingAddress element of the ACF message.

For the Called party number information element and/or the destinationAddress element in the H.225.0 SETUP (see 9.2), the gateway shall use the contents of the destinationInfo element, if present in the ACF message, or otherwise the contents of the destinationInfo element in the most recent ARQ message. In either case the gateway shall append any number digits saved from QSIG INFORMATION messages received since the H.225.0 ARQ message was transmitted.

If a QSIG CALL PROCEEDING message has been sent, the gateway shall include a Sending complete information element in the H.225.0 SETUP message and omit element canOverlapSend. If a QSIG CALL PROCEEDING message has not been sent the gateway shall include element canOverlapSend with value TRUE and omit the Sending complete information element.

8.2.1.3.5 Receipt of H.225.0 ARJ message

If in response to an H.225.0 ARQ message for a call from QSIG the gateway receives an H.225.0 ARJ message with value incompleteAddress in the rejectReason element, behaviour depends on whether further called party number digits have been received in QSIG INFORMATION messages since the H.225.0 ARQ message was sent and whether a QSIG CALL

© ISO/IEC 2002 – All rights reserved

Copyright International Organization for Standardization
Provided by IHS under license with ISO
No reproduction or networking permitted without license from IHS
Not for Resale

PROCEEDING message has been sent. If further digits have been received, the gateway shall transmit another H.225.0 ARQ message to the gatekeeper in accordance with 8.2.1.3.2. If no further digits have been received and no QSIG CALL PROCEEDING message has been sent, the gateway shall retain the call awaiting further called party number digits. Otherwise the gateway shall initiate QSIG call clearing procedures using cause number 28 "invalid number format (address incomplete)" in the QSIG Cause information element.

If in response to an H.225.0 ARQ message for a call from QSIG the gateway receives an H.225.0 ARJ message with a value other than incompleteAddress in the rejectReason element, the gateway shall initiate QSIG call clearing procedures. The QSIG cause number used shall be derived from the rejectReason value in the H.225.0 ARJ message as specified in table 1 in 8.2.1.1.3.

8.2.1.3.6 Receipt of QSIG INFORMATION message following receipt of H.225.0 ARJ message with rejectReason incompleteAddress

On receipt of a QSIG INFORMATION message following receipt of an H.225.0 ARJ message with rejectReason incompleteAddress, the gateway shall transmit another H.225.0 ARQ message to the gatekeeper in accordance with 8.2.1.3.2. If the QSIG INFORMATION message contains a Sending complete information element, the gateway shall transmit a QSIG CALL PROCEEDING message.

8.2.1.3.7 Receipt of QSIG INFORMATION message following transmission of H.225.0 SETUP message

On receipt of a QSIG INFORMATION message following transmission of an H.225.0 SETUP message and prior to receipt of any responding message, the gateway shall save the number digits from the Called party number information element. If the QSIG INFORMATION message contains a Sending complete information element, the gateway shall transmit a QSIG CALL PROCEEDING message.

8.2.1.3.8 Receipt of H.225.0 SETUP ACKNOWLEDGE message

On receipt of an H.225.0 SETUP ACKNOWLEDGE message the gateway shall permit the transmission of H.225.0 INFORMATION messages. If any QSIG INFORMATION messages have been received since transmission of the H.225.0 SETUP message, the gateway shall transmit an H.225.0 INFORMATION message in accordance with 8.2.1.3.10.

8.2.1.3.9 Receipt of QSIG INFORMATION message following receipt of H.225.0 SETUP ACKNOWLEDGE message

On receipt of a QSIG INFORMATION message following receipt of an H.225.0 SETUP ACKNOWLEDGE message and prior to receipt of an H.225.0 CALL PROCEEDING, ALERTING, CONNECT or RELEASE COMPLETE message, the gateway shall transmit an H.225.0 INFORMATION message in accordance with 8.2.1.3.10. If the QSIG INFORMATION message contains a Sending complete information element, the gateway shall transmit a QSIG CALL PROCEEDING message.

8.2.1.3.10 Transmission of H.225.0 INFORMATION message

When transmitting an H.225.0 INFORMATION message, the gateway shall include the Called party number information element containing any number digits received from QSIG since the last H.225.0 message was transmitted (SETUP or INFORMATION), with other fields containing the same values as in the H.225.0 SETUP message. If a QSIG CALL PROCEEDING message has been sent, the gateway shall include a Sending complete information element in the H.225.0 INFORMATION message.

8.2.1.3.11 Receipt of an H.225.0 CALL PROCEEDING message

If the gateway receives an H.225.0 CALL PROCEEDING message it shall stop sending H.225.0 INFORMATION messages. The gateway shall send a QSIG CALL PROCEEDING message if it has not already sent one.

8.2.1.3.12 Receipt of an H.225.0 ALERTING message

If the gateway receives an H.225.0 ALERTING message it shall stop sending H.225.0 INFORMATION messages and send a QSIG ALERTING message.

8.2.1.3.13 Receipt of an H.225.0 CONNECT message

If the gateway receives an H.225.0 CONNECT message it shall stop sending H.225.0 INFORMATION messages and send a QSIG CONNECT message.

8.2.2 Call establishment from QSIG to H.323 without admission procedures

If admission procedures are not used, the gateway is responsible for determining the call signalling transport address to which to send an H.225.0 SETUP message. This transport address can be:

© ISO/IEC 2002 – All rights reserved
Copyright International Organization for Standardization
Provided by IHS under license with ISO
No reproduction or networking permitted without license from IHS
Not for Resale

– the call signalling transport address of the gatekeeper with which the gateway is registered, if registered and using pre-granted admission for H.323 calls established by the gateway; or

– the call signalling transport address of the destination endpoint or other entity able to take care of routing the call to the destination endpoint.

NOTE - In the latter case, the means by which the transport address is determined is an implementation matter.

The gateway shall support call establishment using en bloc sending as specified in 8.2.2.1. The gateway shall support call establishment using QSIG overlap sending either:

– by digit collection and the use of H.323 en bloc sending, as specified in 8.2.2.2; and/or

– by using H.323 overlap sending, as specified in 8.2.2.3.

Examples of message sequences are shown in B.3 in annex B.

8.2.2.1 Call establishment from QSIG to H.323 using en bloc sending and no admission procedures

The following procedures apply when the gateway receives a QSIG SETUP message containing a Sending complete information element or the gateway receives a QSIG SETUP message and is able to determine that the number in the Called party number information element is complete.

NOTE - The means by which the gateway determines the number to be complete is an implementation matter. It can involve knowledge of the numbering plan and/or the use of inter-digit timer expiry.

8.2.2.1.1 Receipt of QSIG SETUP message

On receipt of a QSIG SETUP message containing a number that the gateway determines to be complete in the Called party number information element, or containing a Sending complete information element if the gateway is unable to determine whether the number is complete, the gateway shall attempt to determine the call signalling transport address to which to send an H.225.0 SETUP message.

If a call signalling transport address is determined, the gateway shall transmit an H.225.0 SETUP message to that transport address. The gateway shall include the contents of the QSIG SETUP message Called party number information element in the H.225.0 SETUP message in accordance with 9.2. The gateway shall either include element canOverlapSend with value FALSE in the H.225.0 SETUP message or omit the element. The gateway shall also transmit a QSIG CALL PROCEEDING message.

If the gateway is unable to determine a call signalling transport address, the gateway shall initiate QSIG call clearing procedures using cause number 1 "unallocated (unassigned) number", 3 "no route to destination" or 20 "subscriber absent".

On receipt of a QSIG SETUP message containing a Sending complete information element and a number that the gateway determines to be incomplete in the Called party number information element, the gateway shall initiate QSIG call clearing procedures using cause number 28 “invalid number format (address incomplete)”.

8.2.2.1.2 Receipt of an H.225.0 CALL PROCEEDING message

The requirements of 8.2.1.1.4 apply.

8.2.2.1.3 Receipt of an H.225.0 ALERTING message

The requirements of 8.2.1.1.5 apply.

8.2.2.1.4 Receipt of an H.225.0 CONNECT message

The requirements of 8.2.1.1.6 apply.

8.2.2.2 Call establishment from QSIG to H.323 using overlap sending in QSIG only and no admission procedures

The following procedures apply when the gateway receives a QSIG SETUP message containing no Sending complete information element, is able to determine that the number in the Called party number information element is incomplete and is able, as further digits are received, to determine when the number is complete.

NOTE - The means by which the gateway determines the number to be complete is an implementation matter. It can involve knowledge of the numbering plan and/or the use of inter-digit timer expiry.

© ISO/IEC 2002 – All rights reserved

Copyright International Organization for Standardization
Provided by IHS under license with ISO
No reproduction or networking permitted without license from IHS
Not for Resale

8.2.2.2.1 Receipt of QSIG SETUP message

On receipt of a QSIG SETUP message containing no Sending complete information element, if the gateway determines that the number in the Called party number information element is incomplete it shall transmit a QSIG SETUP ACKNOWLEDGE message and await receipt of further number digits.

8.2.2.2.2 Receipt of QSIG INFORMATION message

On receipt of a QSIG INFORMATION message while awaiting further number digits, the gateway shall append any number digits in the Called party number information element to those number digits already received and determine whether the resulting number is complete. If still incomplete and there is no Sending complete information element in the QSIG INFORMATION message, the gateway shall await further QSIG INFORMATION messages. If the number is still incomplete and the Sending complete information element is present in the QSIG INFORMATION message, the gateway shall initiate QSIG call clearing procedures using cause number 28 “invalid number format (address incomplete)”.

If the gateway determines that the number is complete, the gateway shall attempt to determine the call signalling transport address to which to send an H.225.0 SETUP message.

If a call signalling transport address is determined, the gateway shall transmit an H.225.0 SETUP message to that transport address. The gateway shall include the contents of the QSIG SETUP message Called party number information element, together with further digits received in QSIG INFORMATION messages, in the H.225.0 SETUP message in accordance with 9.2. The gateway shall either include element canOverlapSend with value FALSE in the H.225.0 SETUP message or omit the element. The gateway shall also transmit a QSIG CALL PROCEEDING message.

If the gateway is unable to determine a call signalling transport address, the gateway shall initiate QSIG call clearing procedures using cause number 1 "unallocated (unassigned) number", 3 "no route to destination" or 20 "subscriber absent".

On receipt of a QSIG INFORMATION message containing a Sending complete information element and if the gateway determines the number, including appended digits, to be incomplete, the gateway shall initiate QSIG call clearing procedures using cause number 28 “invalid number format (address incomplete)”.

8.2.2.2.3 Receipt of an H.225.0 CALL PROCEEDING message

The requirements of 8.2.1.1.4 apply.

8.2.2.2.4 Receipt of an H.225.0 ALERTING message

The requirements of 8.2.1.1.5 apply.

8.2.2.2.5 Receipt of an H.225.0 CONNECT message

The requirements of 8.2.1.1.6 apply.

8.2.2.3 Call establishment from QSIG to H.323 using overlap sending in both QSIG and H.323 and no admission procedures

The following procedures apply when the gateway receives a QSIG SETUP message containing no Sending complete information element, is unable to determine whether the number in the Called party number information element is complete and is unable, as further digits are received, to determine when the number is complete.

8.2.2.3.1 Receipt of QSIG SETUP message

On receipt of a QSIG SETUP message containing no Sending complete information element, the gateway shall try to determine the call signalling transport address to which to send the H.225.0 SETUP message, based on the digits received in the Called party number information element.

If the gateway is unable to determine the call signalling transport address and does not require further digits in order to determine a call signalling transport address, the gateway shall initiate QSIG call clearing procedures using cause number 1 "unallocated (unassigned) number", 3 "no route to destination" or 20 "subscriber absent".

If the gateway requires further digits to determine the call signalling transport address, the gateway shall transmit a QSIG SETUP ACKNOWLEDGE message and await further digits in INFORMATION messages.

If the gateway is able to determine the call signalling transport address but is unable to determine that the digits represent a complete number, the gateway shall transmit a QSIG SETUP ACKNOWLEDGE message. The gateway shall also transmit an H.225.0 SETUP message to that transport address. The gateway shall include the contents of the QSIG SETUP message Called party number information element in the H.225.0 SETUP message in accordance with 9.2. The gateway shall include element canOverlapSend with value TRUE in the H.225.0 SETUP message.

© ISO/IEC 2002 – All rights reserved
Copyright International Organization for Standardization
Provided by IHS under license with ISO
No reproduction or networking permitted without license from IHS
Not for Resale

8.2.2.3.2 Receipt of QSIG INFORMATION message before transmitting an H.225.0 SETUP message

On receipt of a QSIG INFORMATION message containing no Sending complete information element before transmitting an H.225.0 SETUP message, the gateway shall append any additional number digits to those number digits already received and try to determine the call signalling transport address to which to send the H.225.0 SETUP message.

If the gateway is unable to determine the call signalling transport address and does not require further digits in order to determine a call signalling transport address, the gateway shall initiate QSIG call clearing procedures using cause number 1 "unallocated (unassigned) number", 3 "no route to destination" or 20 "subscriber absent".

If the gateway requires further digits to determine the call signalling transport address, the gateway shall await further digits in QSIG INFORMATION messages.

If the gateway is able to determine the call signalling transport address but is unable to determine that the digits represent a complete number, the gateway shall transmit an H.225.0 SETUP message to that transport address. The gateway shall include the contents of the QSIG SETUP message Called party number information element, together with further digits received in QSIG INFORMATION messages, in the H.225.0 SETUP message in accordance with 9.2. The gateway shall include element canOverlapSend with value TRUE in the H.225.0 SETUP message.

8.2.2.3.3 Receipt of QSIG INFORMATION message following transmission of H.225.0 SETUP message

The requirements of 8.2.1.3.7 shall apply.

8.2.2.3.4 Receipt of H.225.0 SETUP ACKNOWLEDGE message

The requirements of 8.2.1.3.8 shall apply.

8.2.2.3.5 Receipt of QSIG INFORMATION message following receipt of H.225.0 SETUP ACKNOWLEDGE message

The requirements of 8.2.1.3.9 shall apply.

8.2.2.3.6 Transmission of H.225.0 INFORMATION message

The requirements of 8.2.1.3.10 shall apply.

8.2.2.3.7 Receipt of an H.225.0 CALL PROCEEDING message

The requirements of 8.2.1.3.11 shall apply.

8.2.2.3.8 Receipt of an H.225.0 ALERTING message

The requirements of 8.2.1.3.12 shall apply.

8.2.2.3.9 Receipt of an H.225.0 CONNECT message

The requirements of 8.2.1.3.13 shall apply.

8.3 Call establishment from H.323 to QSIG

Examples of message sequences are shown in B.4 in annex B.

8.3.1 Receipt of an H.225.0 SETUP message

On receipt of an H.225.0 SETUP message the gateway shall carry out admission procedures in accordance with H.323 unless either:

– the gateway has not registered with a gatekeeper; or

– the gateway has registered with a gatekeeper and pre-granted admission applies for H.323 calls arriving at the gateway.

NOTE - In accordance with H.323, unsuccessful admission results in rejection of the call or redirection of the call to the gatekeeper. In the latter case a further H.225.0 SETUP message will normally be received from the gatekeeper and will be handled as specified here, beginning with a further attempt at admission.

On successful completion of admission procedures, or if admission procedures are not required, the gateway shall transmit a QSIG SETUP message.

The gateway shall support call establishment using en bloc sending. The gateway may also support call establishment using H.323 and QSIG overlap sending.

© ISO/IEC 2002 – All rights reserved

Copyright International Organization for Standardization
Provided by IHS under license with ISO
No reproduction or networking permitted without license from IHS
Not for Resale

The gateway shall include the Sending complete information element in the QSIG SETUP message if any of the following circumstances applies:

- the gateway does not support overlap sending; or
- the H.225.0 SETUP message does not contain a canOverlapSend element or contains the element with value FALSE (NOTE); or
- the H.225.0 SETUP message contains a Sending complete information element; or
- the gateway is able to determine that the number included in the Called party number information element in the QSIG SETUP message is complete.

NOTE - The canOverlapSend element indicates the calling endpoint's ability to support overlap sending.

In other circumstances the gateway shall omit the Sending complete information element from the QSIG SETUP message and be prepared to engage in overlap sending procedures.

If the gateway includes the Sending complete information element in the QSIG SETUP message, it shall respond to the H.225.0 SETUP message with an H.225.0 CALL PROCEEDING message. Otherwise it shall respond with an H.225.0 SETUP ACKNOWLEDGE message.

8.3.2 Additional messages relating to overlap sending

The following procedure applies only if overlap sending is supported and the Sending complete information element was omitted from the QSIG SETUP message.

8.3.2.1 Receipt of H.225.0 INFORMATION message following transmission of QSIG SETUP message

On receipt of an H.225.0 INFORMATION message following transmission of a QSIG SETUP message and prior to receipt of any responding message, the gateway shall save the number digits from the Called party number information element. If the H.225.0 INFORMATION message contains a Sending complete information element, the gateway shall transmit an H.225.0 CALL PROCEEDING message.

8.3.2.2 Receipt of QSIG SETUP ACKNOWLEDGE message

On receipt of a QSIG SETUP ACKNOWLEDGE message the gateway shall permit the transmission of QSIG INFORMATION messages. If any H.225.0 INFORMATION messages have been received since transmission of the QSIG SETUP message, the gateway shall transmit a QSIG INFORMATION message in accordance with 8.3.2.4.

8.3.2.3 Receipt of H.225.0 INFORMATION message following receipt of QSIG SETUP ACKNOWLEDGE message

On receipt of an H.225.0 INFORMATION message following receipt of a QSIG SETUP ACKNOWLEDGE message and prior to receipt of a QSIG CALL PROCEEDING, ALERTING, CONNECT, DISCONNECT, RELEASE or RELEASE COMPLETE message, the gateway shall transmit a QSIG INFORMATION message in accordance with 8.3.2.4. If the H.225.0 INFORMATION message contains a Sending complete information element, the gateway shall transmit an H.225.0 CALL PROCEEDING message.

8.3.2.4 Transmission of QSIG INFORMATION message

When transmitting a QSIG INFORMATION message, the gateway shall include the Called party number information element containing any number digits received in H.225.0 INFORMATION messages since the last QSIG message was transmitted (SETUP or INFORMATION), with other fields containing the same values as in the QSIG SETUP message. If an H.225.0 CALL PROCEEDING message has been sent, the gateway shall include a Sending complete information element in the QSIG INFORMATION message.

8.3.3 Receipt of a QSIG CALL PROCEEDING message

If the gateway receives a QSIG CALL PROCEEDING message it shall stop sending QSIG INFORMATION messages. The gateway shall send an H.225.0 CALL PROCEEDING message if it has not already sent one.

8.3.4 Receipt of a QSIG ALERTING message

If the gateway receives a QSIG ALERTING message it shall stop sending QSIG INFORMATION messages and send an H.225.0 ALERTING message.

8.3.5 Receipt of a QSIG CONNECT message

If the gateway receives a QSIG CONNECT message it shall stop sending QSIG INFORMATION messages and send an H.225.0 CONNECT message. It shall also respond with a QSIG CONNECT ACKNOWLEDGE message.

© ISO/IEC 2002 – All rights reserved
Copyright International Organization for Standardization
Provided by IHS under license with ISO
No reproduction or networking permitted without license from IHS
Not for Resale

8.4 PROGRESS messages and Progress indicator information elements

8.4.1 Receipt of a Progress indicator information element in a QSIG message

If the gateway receives a Progress indicator information element with coding standard value 00 (CCITT standardized coding) in a QSIG ALERTING or CONNECT message, it shall forward the Progress indicator information element in the corresponding H.225.0 ALERTING or CONNECT message respectively. If the gateway receives a Progress indicator information element with coding standard value 00 (CCITT standardized coding) in a QSIG PROGRESS message, it shall forward the Progress indicator information element in an H.225.0 PROGRESS message if the H.225.0 call state permits. The gateway shall not forward a Progress indicator information element with coding standard value 01 (ISO/IEC standard) or a Progress indicator information element received in a QSIG SETUP message.

8.4.2 Receipt of a Progress indicator information element in an H.225.0 message

If the gateway receives a Progress indicator information element in an H.225.0 ALERTING or CONNECT message, it shall forward the Progress indicator information element in the corresponding QSIG ALERTING or CONNECT message respectively. If the gateway receives a Progress indicator information element in an H.225.0 PROGRESS or CALL PROCEEDING message, it shall forward the Progress indicator information element in a QSIG PROGRESS message if the QSIG call state permits.

8.4.3 Transmission of Progress indicator information element in support of gateway-provided ring-back tone

When the gateway provides ring-back tone in accordance with clause 15, it shall include a Progress indicator information element containing progress description value 8 when transmitting a QSIG ALERTING message.

8.5 Call clearing

8.5.1 Call clearing initiated by QSIG

On receipt of a QSIG DISCONNECT, RELEASE or RELEASE COMPLETE message that initiates call clearing, the gateway shall initiate H.323 call clearing procedures.

NOTE - Where call admission procedures have been used, H.323 requires disengage procedures to be employed on call clearing.

8.5.2 Call clearing initiated by H.323

On receipt of an H.225.0 RELEASE COMPLETE message or an H.245 EndSessionCommand, the gateway shall initiate QSIG call clearing procedures.

NOTE - Where call admission procedures have been used, H.323 requires disengage procedures to be employed on call clearing.

9 Numbering requirements

9.1 Supported numbering plans and types of number

The gateway shall comply with relevant aspects of ISO/IEC 11571 for numbering within the PISN and shall accept the following values in the numbering plan identification (NPI) field of QSIG Called party number, Calling party number and Connected number information elements:

– Unknown;

– ISDN/Telephony numbering plan (ITU-T Rec. E.164/E.163);

– Private Numbering Plan (PNP).

The gateway shall also accept in these QSIG information elements any values of the type of number (TON) field that have meaning (in accordance with ISO/IEC 11571) in conjunction with the particular value present in the NPI field.

The gateway shall also accept these NPI/TON combinations in H.225.0 Called party number, Calling party number and Connected number information elements and shall accept equivalent information in H.225.0 destinationInfo (in ACF message), destinationAddress, sourceAddress and connectedAddress elements where:

– choice dialedDigits is equivalent to NPI value unknown;

– choice partyNumber.e164Number is equivalent to NPI value ISDN/Telephony numbering plan (ITU-T Rec. E.164/E.163); and

– choice partyNumber.privateNumber is equivalent to NPI value Private Numbering Plan (PNP).

© ISO/IEC 2002 – All rights reserved

Copyright International Organization for Standardization
Provided by IHS under license with ISO
No reproduction or networking permitted without license from IHS
Not for Resale

9.2 Mapping numbers from QSIG to H.323

The gateway shall have the capability to map a number received from QSIG to a number for transmission in H.225.0 without number translation and without change of NPI/TON values or equivalent. This requirement includes:

- where admission procedures are used, mapping the contents of a QSIG Called party number information element in a QSIG SETUP message and any subsequent QSIG INFORMATION messages to an H.225.0 destinationInfo element in an ARQ message (NOTE 1);
- where admission procedures are used, mapping the contents of a QSIG Calling party number information element in a QSIG SETUP message to an H.225.0 srcInfo element in an ARQ message;
- except where admission procedures are used and the received H.225.0 ACF message contains element destinationInfo, mapping the contents of a QSIG Called party number information element in a SETUP message and any subsequent QSIG INFORMATION messages to an H.225.0 destinationAddress element in an H.225.0 SETUP message and, unless the NPI field has value PNP, an H.225.0 Called party number information element in the same message (NOTE 2, NOTE 3);
- mapping the contents of a QSIG Called party number information in a QSIG INFORMATION message received after the sending of an H.225.0 SETUP message to an H.225.0 Called party number information element in an H.225.0 INFORMATION message;
- mapping the contents of a QSIG Calling party number information element with a NPI value other than PNP in a QSIG SETUP message to an H.225.0 Calling party number information element in an H.225.0 SETUP message;
- mapping the contents of a QSIG Calling party number information element with a NPI value of PNP in a QSIG SETUP message to an H.225.0 sourceAddress element in an H.225.0 SETUP message (NOTE 4);
- mapping the contents of a QSIG Connected number information element in a QSIG CONNECT message to an H.225.0 Connected number information element in an H.225.0 CONNECT message.

The above requirement does not prevent the gateway having the ability to perform number translation, provided it can be configured to operate without number translation. Means by which gateways can perform number translation are outside the scope of this International Standard.

NOTE 1 - The destinationInfo element is of the same type (AliasAddress) as the destinationAddress element in call control messages, and therefore NPI equivalents are as specified above for destinationAddress.

NOTE 2 - Where destinationInfo is present in the received H.225.0 ACF message, the alias address (or addresses) it contains is used in the H.225.0 SETUP message.

NOTE 3 - The special requirement for PNP numbers is in accordance with 7.2.2.4 of H.225.0, which forbids the inclusion of number digits with NPI value PNP in the Called party number information element. H.323 still requires the gateway to generate an H.225.0 Called party number information element. In the absence of any other form of number available for inclusion, the information element can include all the contents of the QSIG Called party number information element with the exception of the digit field, which should be left empty.

NOTE 4 - The special requirement for PNP numbers is in accordance with 7.2.2.6 of H.225.0, which forbids the inclusion of number digits with NPI value PNP in the Calling party number information element. H.323 still requires the gateway to generate an H.225.0 Calling party number information element. In the absence of any other form of number available for inclusion, the information element can include all the contents of the QSIG Calling party number information element with the exception of the digit field, which should be left empty.

When generating an H.225.0 Called party number information element, if the numbering plan is PNP the number digits shall be omitted.

NOTE - This is in accordance with 7.2.2.4 of H.225.0. The NPI and TON fields are still present in the H.225.0 Called party number information element. The entire information from the QSIG Called party number information is available in the H.225.0 destinationAddress element.

9.3 Mapping numbers from H.323 to QSIG

The gateway shall have the capability to map a number received from H.225.0 to a number for transmission in QSIG without number translation and without change of NPI/TON values or equivalent. This requirement includes:

- mapping the contents of an alias address in an H.225.0 destinationAddress element in an H.225.0 SETUP message to a QSIG Called party number information element in a QSIG SETUP message or, if destinationAddress contains no alias address that can be mapped, mapping the H.225.0 Called party number information element, if present.
- where the only addresses able to be mapped from the H.225.0 destinationAddress element and the H.225.0 Called party number information element in an H.225.0 SETUP message identify the gateway, mapping the contents of an alias

© ISO/IEC 2002 – All rights reserved
Copyright International Organization for Standardization
Provided by IHS under license with ISO
No reproduction or networking permitted without license from IHS
Not for Resale

address in an H.225.0 remoteExtensionAddress element, if present, to a QSIG Called party number information element in a QSIG SETUP message.

- mapping the contents of an H.225.0 Called party number information in an H.225.0 INFORMATION message received after the sending of a QSIG SETUP message to a QSIG Called party number information element in a QSIG INFORMATION message.
- mapping the contents of the Calling party number information element or an alias address in an H.225.0 sourceAddress element in an H.225.0 SETUP message to a QSIG Calling party number information element in a QSIG SETUP message (NOTE).
- mapping the contents of the Connected number information element in an H.225.0 CONNECT message to a QSIG Connected number information element in a QSIG CONNECT message or, if the Connected number information element is not present, mapping a suitable alias address, if present in the H.225.0 connectedAddress element.

The above requirement does not prevent the gateway having the ability to perform number translation, provided it can be configured to operate without number translation. Means by which gateways can perform number translation are outside the scope of this International Standard.

NOTE - If more than one number can be mapped to the QSIG Calling party number information element, the choice of which to map is an implementation matter.

9.4 Handling of presentation and screening indicators

The gateway shall pass presentation and screening indicators associated with calling party and connected numbers transparently from QSIG to H.323 and vice versa. This includes the presentation indicator and screening indicator fields in QSIG and H.225.0 Calling party number and Connected number information elements. It also includes the H.225.0 presentationIndicator and screeningIndicator elements when the numbers concerned are mapped to/from H.225.0 sourceAddress and connectedAddress elements.

9.5 Handling of subaddresses

The gateway shall not pass on in an H.225.0 message any Called party subaddress, Calling party subaddress or Connected subaddress information element received in a QSIG message.

10 Security requirements

Within a PISN, QSIG signalling information is generally regarded as inherently secure and not subject to active attacks that can lead to denial or misuse of service. When interworking between QSIG and H.323, it is important to provide a similar level of security for H.323 signalling information, in order to prevent denial or misuse of service in the PISN.

The gateway shall support the baseline security profile specified in annex D of ITU-T recommendation H.235 and shall use the profile's authentication and integrity mechanisms when communicating with a compliant gatekeeper, if required to do so by network policy and a shared secret key is available. This applies to H.225.0 RAS signalling and to H.225.0 call control signalling using the gatekeeper-routed model. The means for establishing shared secret keys is outside the scope of this International Standard.

NOTE - This profile provides for authentication and integrity of H.225.0 messages (RAS and call control) between an endpoint (e.g., a gateway) and its gatekeeper using a shared secret key. Authentication and integrity of H.225.0 call control signalling automatically extends to any fast connect signalling and tunnelled H.245 signalling, but authentication and integrity of a separate H.245 channel is not provided.

The use of the optional voice encryption profile, which is part of the basic security profile, is outside the scope of this International Standard.

The use of authentication and integrity mechanisms for H.225.0 call control signalling directly to an H.323 entity other than the gatekeeper with which the gateway is registered (direct call signalling) is outside the scope of this International Standard.

NOTE - This would not be scaleable, owing to the potentially very large number of shared secrets required.

The ability to support alternative or additional security measures (e.g., public key infrastructure, transport layer or IP layer security) is not precluded but is outside the scope of this International Standard.

11 Requirements for support of basic services

This International Standard specifies signalling interworking for basic services that provide a bidirectional transfer capability for speech, facsimile and modem media between the two networks. These basic services are indicated in the QSIG Bearer capability information element by the field values shown in table 2:

© ISO/IEC 2002 – All rights reserved

Copyright International Organization for Standardization
Provided by IHS under license with ISO
No reproduction or networking permitted without license from IHS
Not for Resale

Table 2 – Field values within the QSIG Bearer capability information element for speech, facsimile and modem media

Field	Value
Coding standard	"CCITT standardized coding" (00)
Information transfer capability	"speech" (00000) (NOTE 1), "unrestricted digital information" (01000) (NOTE 2), "restricted digital information" (01001) (NOTE 2), "3,1 kHz audio" (10000) (NOTE 1), "unrestricted digital information with tones and announcements" (10001) (NOTE 2)
Transfer mode	"circuit mode" (00)
Information transfer rate	"64 Kbit/s" (10000)
Multiplier	Octet omitted
User information layer 1 protocol	"CCITT recommendation G.711 μ-law" (00010) or "CCITT recommendation G.711 A-law" (00011)
NOTE 1 - Information transfer capability "speech" is suitable only for speech, whereas information transfer capability "3,1 KHz audio" is suitable for speech, facsimile or modem data.	
NOTE 2 - Information transfer capabilities "unrestricted digital information" and "restricted digital information" can be used for speech, in which case the user information layer 1 protocol will be present and coded as indicated in the table. Information transfer capability "unrestricted digital information with tones and announcements" can be used for speech when tones and announcements are present. These three types of bearer capability require no alteration to user information, thereby preventing the use of techniques such as compression.	

In addition, where QSIG is carried over an inter-PINX link that provides 16 Kbit/s or 8 Kbit/s user information channels in accordance with ISO/IEC 17310 or ISO/IEC 17311 respectively, other values can occur in the coding standard, information transfer rate and user information layer 1 fields as specified in those Standards.

11.1 Calls from QSIG to H.323

The gateway shall forward from QSIG to H.323 only calls in which the Bearer capability information element in the QSIG SETUP message has field values as shown in table 2 or as modified by ISO/IEC 17310 or ISO/IEC 17311. The gateway shall reject other calls and may also reject calls for which the information transfer capability field has the value "unrestricted digital information", "restricted digital information" or "unrestricted digital information with tones and announcements". To reject a call, the gateway shall initiate QSIG call clearing procedures using cause number 65 "bearer capability not implemented" in the QSIG Cause information element.

When forwarding a call, the gateway shall pass on the QSIG Bearer capability information element unchanged as the H.225.0 Bearer capability information element, with the following exception: fields coded in accordance with ISO/IEC 17310 or ISO/IEC 17311 shall be converted to values that conform with table 2. The gateway shall not pass on QSIG Low layer compatibility and High layer compatibility information elements.

NOTE - The speech encoding method used in the IP network is negotiated using H.245 or fast connect, and therefore the method and rate can differ from the method and rate indicated in the H.225.0 Bearer capability information element (in this case G.711 and 64 Kbit/s).

NOTE - se of a different speech encoding method in the IP network from that used in the QSIG network can result in the use of speech transcoding at the gateway. Speech transcoding can be avoided by negotiating in the IP network the same speech encoding that is used on the inter-PINX link.

11.2 Calls from H.323 to QSIG

In the absence of other relevant information in the H.225.0 SETUP message (e.g., fast connect), the gateway shall forward only calls in which the Bearer capability information element in the H.225.0 SETUP message has field values as shown in table 2. The gateway shall reject other calls and may also reject calls for which the information transfer capability field has the value "unrestricted digital information", "restricted digital information" or "unrestricted digital information with tones and announcements". To reject a call, the gateway shall initiate H.225.0 call clearing procedures using cause number 65 "bearer capability not implemented" in the H.225.0 Cause information element.

© ISO/IEC 2002 – All rights reserved
Copyright International Organization for Standardization
Provided by IHS under license with ISO
No reproduction or networking permitted without license from IHS
Not for Resale

When forwarding a call from H.323 to QSIG, the gateway shall code the QSIG Bearer capability information element in accordance with table 2 or, for forwarding to an inter-PINX link that provides 16 Kbit/s or 8 Kbit/s user information channels, in accordance with ISO/IEC 17310 or ISO/IEC 17311 respectively.

The gateway shall not include a Low layer compatibility in the QSIG SETUP message. The gateway shall not include a High layer compatibility information element in the QSIG SETUP message except as allowed in clause 13.

NOTE - The speech encoding method used in the IP network is negotiated using H.245 or fast connect, and therefore the method and rate can differ from the method and rate indicated in the H.225.0 Bearer capability information element (in this case G.711 and 64 Kbit/s).

NOTE - Use of a different speech encoding method in the IP network from that used in the QSIG network can result in the use of speech transcoding at the gateway. Speech transcoding can be avoided by negotiating in the IP network the same speech encoding that is used on the inter-PINX link.

12 Media channel establishment

For basic services within the scope of this International Standard, except where special support for group 3 fax is being provided (clause 13), each call requires in principle the use of two audio logical channels, one in each direction. However, calls can originate or terminate at H.323 endpoints that support only one-way audio (e.g., recorded announcement devices that transmit only).

The gateway shall open and maintain an audio logical channel from itself to the peer endpoint, subject to the peer endpoint having acceptable audio receive capabilities, and accept the opening of an audio logical channel from the peer endpoint, subject to the peer endpoint using an audio transmit capability that is an acceptable receive capability at the gateway.

NOTE - The means for achieving this include fast connect, tunnelled H.245 and, when interworking with an endpoint that supports only H.323 version 3 or earlier, a separate H.245 channel.

The gateway shall maintain a connection between each established audio logical channel and the corresponding user information channel on the inter-PINX link.

The gateway may initiate call clearing in accordance with 8.5 if neither a transmit nor a receive audio logical channel can be opened.

NOTE - Reasons for failing to establish an audio logical channel can include:

- the peer endpoint has no transmit or no receive audio capabilities;
- the peer endpoint's transmit or receive audio capabilities are incompatible with the gateway's audio capabilities;
- the gateway temporarily lacks resource compatible with the peer endpoint's transmit or receive capabilities.

The gateway shall tolerate the closing and re-opening of audio logical channels during a call for reasons including but not necessarily limited to the following: change of codec, call hold, call transfer, conference formation, etc.. However, the gateway may initiate call clearing in accordance with 8.5 in the event that audio logical channels cannot be re-opened for reasons listed above.

13 Requirements for the support of group 3 fax in accordance with H.323 annex D

Gateway support for group 3 fax in accordance with H.323 annex D is optional. If the gateway supports this capability, the requirements of this clause apply.

13.1 Start of fax transmission

The gateway shall be able to monitor audio information at the start of and during a call in order to detect the presence of fax and determine the negotiated transmission rate. If the gateway detects fax it shall close audio logical channel(s) (if open) and open fax logical channel(s) in accordance with H.323 annex D.

NOTE - For calls from QSIG to H.323, the QSIG SETUP message can contain a High layer compatibility information element indicating group 3 fax. However, the gateway still needs to monitor audio information to detect the transmission rate before opening fax logical channels.

NOTE - H.323 annex D provides the following options: two unidirectional logical channels using UDP, two unidirectional logical channels using TCP or one bidirectional logical channel using TCP.

The gateway shall be able to co-operate in accordance with H.323 annex D if the peer endpoint initiates the closing of audio logical channel(s) and the opening of fax logical channel(s) or the opening of fax logical channel(s) at the outset.

© ISO/IEC 2002 – All rights reserved

Copyright International Organization for Standardization
Provided by IHS under license with ISO
No reproduction or networking permitted without license from IHS
Not for Resale

For a call from H.323 to QSIG, if the gateway knows prior to sending the QSIG SETUP message that fax is being transmitted (e.g., because the opening of fax logical channels has been requested by means of fast connect), it may include in the QSIG SETUP message a High layer compatibility information element indicating group 3 fax.

13.2 End of fax transmission

The gateway may have the ability to detect the end of fax transmission. If the gateway detects the end of fax transmission it may close the fax logical channel(s) and open audio logical channel(s).

The gateway shall be able to co-operate in accordance with H.245 if the peer endpoint initiates the closing of fax logical channel(s) and the opening of audio logical channel(s).

14 Requirements for the support of DTMF

For a call from QSIG to H.323 or from H.323 to QSIG, a gateway shall be able to detect and generate DTMF tones corresponding to characters 0-9, A, B, C, D. * and # on the user information channel of the inter-PINX link.

A gateway shall support the transmission and reception of H.245 userInputIndication messages conveying characters 0-9, A, B, C, D, * and #.

A gateway may support the transmission and reception of characters 0-9, A, B, C, D, * and # within RTP on special logical channels (one in each direction) in accordance with 10.5 of H.323.

On detection of a DTMF tone from the inter-PINX link, the gateway shall send an H.245 userInputIndication message conveying the character concerned, unless a logical channel for transmitting DTMF characters is open, in which case the gateway shall send the character using RTP on that logical channel.

On receipt of a DTMF character in a userInputIndication message or via RTP, the gateway shall generate a DTMF tone on the inter-PINX link.

15 Requirements for the provision of ring-back tone

For a call from QSIG to H.323, if the gateway does not receive progress description value 1 or 8 in a Progress indicator information element in the H.225.0 ALERTING message or an earlier H.225.0 message, the gateway shall provide ring-back tone towards the calling user. Ring-back tone shall commence when the QSIG ALERTING message is sent and shall terminate when the call is answered or cleared.

NOTE - See 8.4.3 for requirements concerning the Progress indicator information element when providing ring-back tone.

NOTE - For a call from QSIG to H.323, the called endpoint can provide ring-back tone while alerting the called user. If the gateway receives progress description value 1 or 8 in a Progress indicator information element in the H.225.0 ALERTING message or an earlier H.225.0 message, the gateway need not provide ring-back tone.

NOTE - For a call from H.323 to QSIG, ring-back tone is normally provided by the PISN while alerting the called user. There are no gateway requirements for the provision of ring-back tone in this direction.

© ISO/IEC 2002 – All rights reserved
Copyright International Organization for Standardization
Provided by IHS under license with ISO
No reproduction or networking permitted without license from IHS
Not for Resale

Annex A
(normative)

Implementation Conformance Statement (ICS) proforma

A.1 Introduction

A.1.1 Purpose of an ICS proforma

The supplier of an implementation which is claimed to conform to this International Standard shall complete the following Implementation Conformance Statement (ICS) proforma.

A completed ICS proforma is the ICS for the implementation in question. The ICS is a statement of which capabilities and options have been implemented for a given specification.

The ICS can have a number of uses, including use:

– by the implementor, as a check list for implementations to reduce the risk of unintended non-conformance, e.g. through oversight;

– by the supplier and acquirer, or potential acquirer, of the implementation, as a detailed indication of the capabilities of the implementation, stated relative to the common basis for understanding provided by the Standard's ICS proforma;

– by the user or potential user of the implementation, as a basis for initially checking the possibility of interworking with another implementation - while interworking can never be guaranteed, failure to interwork can often be predicted from incompatible ICS;

– by a tester, as the basis for selecting appropriate tests against which to assess the claim for conformance of the implementation.

A.2 Instructions for completing the ICS proforma

A.2.1 General structure of the ICS proforma

The ICS proforma is a fixed format questionnaire divided into sub-clauses each containing a group of individual items. Each item is identified by an item reference, the description of the item (question to be answered), and the reference(s) to the clause(s) that specifies (specify) the item in the main body of this International Standard.

The "Conditions for Status" column contains a specification, if appropriate, of the predicate upon which a conditional status is based. The indication of an item reference in this column indicates a simple-predicate condition (support of this item is dependent on the support marked for the referenced item).

The “Status” column indicates whether an item is applicable and if so whether support is mandatory or optional. The following terms are used:

I	irrelevant or out-of-scope - this capability is outside the scope of the standard to which this ICS proforma applies and is not subject to conformance testing in this context;
M	mandatory (the capability is required for conformance to the standard);
N/A	not applicable - in the given context, it is impossible to use the capability; no answer in the support column is required;
O	optional (the capability is not required for conformance to the standard, but if the capability is implemented it is required to conform to the specification in this International Standard);
O.<n>	qualified optional - in this case, <n> is an integer that identifies a unique group of related optional items; if no additional qualification is indicated, the support of at least one of the optional items is required for conformance to this International Standard; otherwise, the qualification and logic of the selection among the optional items is defined below the table explicitly;
X	excluded or prohibited - there is a requirement not to use this capability in a given context.

© ISO/IEC 2002 – All rights reserved

Copyright International Organization for Standardization
Provided by IHS under license with ISO
No reproduction or networking permitted without license from IHS
Not for Resale

Answers to the questionnaire items are to be provided in the “Support” column, by simply marking an answer to indicate a restricted choice (Yes, No or N/A). In specific cases, the indication of explicit values may be requested. Where a support column box is left blank, no answer is required.

If a "prerequisite line" (see A.2.4 below) is used after a subclause heading or table title, and its predicate is false, no answer is required for the whole subclause or table, respectively.

A.2.2 Additional Information

Items of Additional Information allow a supplier to provide further information intended to assist the interpretation of the ICS. It is not intended or expected that a large quantity will be supplied, and an ICS can be considered complete without any such information. Examples might be an outline of the ways in which a (single) implementation can be set up to operate in a variety of environments and configurations.

References to items of Additional Information may be entered next to any answer in the questionnaire, and may be included in items of Exception Information.

A.2.3 Exception Information

It may occasionally happen that a supplier will wish to answer an item with mandatory or prohibited status (after any conditions have been applied) in a way that conflicts with the indicated requirement. No pre-printed answer will be found in the Support column for this. Instead, the supplier is required to write into the support column an x.<i> reference to an item of Exception Information, and to provide the appropriate rationale in the Exception item itself.

An implementation for which an Exception item is required in this way does not conform to this International Standard. A possible reason for the situation described above is that a defect in the Standard has been reported, a correction for which is expected to change the requirement not met by the implementation.

A.2.4 Further indications of the ICS proforma tables

In addition to the columns of a table, the following information may be indicated:

"Prerequisite line"

A prerequisite line after a subclause heading or table title indicates that the whole subclause or the whole table is not required to be completed if the predicate is false.

"Qualification"

At the end of a table, a detailed qualification for a group of optional items may be indicated, as specified in the description of the status "qualified optional" in subclause in A.2.1.

"Comments"

This box at the end of a table allows a supplier to enter any comments to that table. Comments may also be provided separately (without using this box).

© ISO/IEC 2002 – All rights reserved
Copyright International Organization for Standardization
Provided by IHS under license with ISO
No reproduction or networking permitted without license from IHS
Not for Resale

A.3 Identification of the implementation

A.3.1 Implementation Identification

Supplier (note 1)	
Contact point for queries about the ICS (note 1)	
Implementation Name(s) and Version(s) (note 1, note 2)	
Other information necessary for full identification - e.g., name(s) and version(s) for machines and/or operating systems; System name(s)	

NOTE 1 - Only the first three items are required for all implementations; other information may be completed as appropriate in meeting the requirement for full identification.

NOTE 2 - The terms Name and Version should be interpreted appropriately to correspond with a suppliers terminology (e.g. Type, Series, Model).

A.3.2 Specification for which this ICS applies

Title	Corporate telecommunication networks – Signalling interworking between QSIG and H.323 – Basic services
Version	1.0
Corrigenda Implemented (if applicable)	
Addenda Implemented (if applicable)	
Amendments Implemented (if applicable)	
Have any exception items been required ?	No[ ]Yes[ ] (The answer Yes means that the implementation does not conform to this International Standard) (Note)
Date of Statement	
Note: In this case, an explanation shall be given of the nature of non-conformance either below or on a separate sheet of paper. Nature of non-conformance (if applicable):	

© ISO/IEC 2002 – All rights reserved

Copyright International Organization for Standardization
Provided by IHS under license with ISO
No reproduction or networking permitted without license from IHS
Not for Resale

A.4 Major options

Table A.1 – Major options

Item	Question: Does the implementation...	Conditions for status	Status	Reference	Support
MC1	Support operation without registering with a gatekeeper?		O	7	[ ]Yes [ ]No
MC2	Support pre-granted admission?		O	7	[ ]Yes [ ]No
MC3	Support overlap sending in QSIG only for calls from QSIG to H.323?		O.1	8	[ ]Yes [ ]No
MC4	Support overlap sending in QSIG and H.323 for calls from QSIG to H.323?		O.1	8	[ ]Yes [ ]No
MC5	Support overlap sending from H.323 to QSIG?		O	8	[ ]Yes [ ]No
MC6	Use 16 Kbit/s user information channels on the inter-PINX link in accordance with ISO/IEC 17310?		O	11	[ ]Yes [ ]No
MC7	Use 8 Kbit/s user information channels on the inter-PINX link in accordance with ISO/IEC 17311?		O	11	[ ]Yes [ ]No
MC8	Support of fax in accordance with H.323 annex D in IP network.		O	13	[ ]Yes [ ]No
Comments:					

© ISO/IEC 2002 – All rights reserved
Copyright International Organization for Standardization
Provided by IHS under license with ISO
No reproduction or networking permitted without license from IHS
Not for Resale

A.5 General requirements

Table A.2 – General requirements

Item	Question: Does the implementation...	Conditions for status	Status	Reference	Support
GR1	Support QSIG in accordance with ISO/IEC 11572?		M	7	[ ]Yes
GR2	Support H.323 version 4 and H.225.0 version 4		M	7	[ ]Yes
GR3	Support interworking with other H.323 entities in accordance with the provisions of H.323 version 4		M	7	[ ]Yes
GR4	Have an ability to discover and register with a gatekeeper		M	7	[ ]Yes
GR5	Support H.323 admission procedures during call establishment		M	8.2.1 and 8.3	[ ]Yes
GR6	Support call establishment without H.323 admission procedures?	MC1 OR MC2 NOT (MC1 OR MC2)	M X	8.2.2 and 8.3	[ ]Yes
GR7	Support H.323 direct call signalling		M	7	[ ]Yes
GR8	Support H.323 gatekeeper-routed signalling		M	7	[ ]Yes
GR9	Use of H.323 direct call signalling or H.323 gatekeeper-routed signalling in accordance with instructions from the gatekeeper when registered with a gatekeeper and pre-granted admission does not apply		M	7	[ ]Yes
GR10	Support call establishment from QSIG to H.323		M	7	[ ]Yes
GR11	Support call establishment from H.323 to QSIG		M	7	[ ]Yes
Comments:					

© ISO/IEC 2002 – All rights reserved

Copyright International Organization for Standardization
Provided by IHS under license with ISO
No reproduction or networking permitted without license from IHS
Not for Resale

A.6 Message validation and handling of protocol errors

Table A.3 – Message validation and handling of protocol errors

Item	Question: Does the implementation...	Conditions for status	Status	Reference	Support
MV1	Validate received QSIG messages in accordance with ISO/IEC 11572 and act in accordance with ISO/IEC 11572 on detection of a QSIG protocol error		M	8.1	[ ]Yes
MV2	Validate received H.225.0 messages in accordance with H.323 and H.225.0 and act in accordance with H.323 and H.225.0 on detection of an H.225.0 protocol error		M	8.1	[ ]Yes
Comments:					

A.7 Call establishment from QSIG to H.323 with admission procedures and en bloc sending

Table A.4 – Call establishment from QSIG to H.323 with admission procedures and en bloc sending

Item	Question: Does the implementation...	Conditions for status	Status	Reference	Support
QHA1	Support receipt of QSIG SETUP message		M	8.2.1.1.1	[ ]Yes
QHA2	Support receipt of H.225.0 ACF message		M	8.2.1.1.2	[ ]Yes
QHA3	Support receipt of H.225.0 ARJ message		M	8.2.1.1.3	[ ]Yes
QHA4	Support receipt of H.225.0 ALERTING message		M	8.2.1.1.5	[ ]Yes
QHA5	Support receipt of H.225.0 CONNECT message		M	8.2.1.1.6	[ ]Yes
Comments:					

© ISO/IEC 2002 – All rights reserved
Copyright International Organization for Standardization
Provided by IHS under license with ISO
No reproduction or networking permitted without license from IHS
Not for Resale

A.8 Call establishment from QSIG to H.323 with admission procedures and overlap sending in QSIG only

Table A.5 – Call establishment from QSIG to H.323 with admission procedures and overlap sending in QSIG only

Item	Question: Does the implementation...	Conditions for status	Status	Reference	Support
QHAO1	Support receipt of QSIG SETUP message	MC3	M	8.2.1.2.1	[ ]Yes
		NOT MC3	N/A		[ ]N/A
QHAO2	Support receipt of QSIG INFORMATION message	MC3	M	8.2.1.2.2	[ ]Yes
		NOT MC3	N/A		[ ]N/A
QHAO3	Support transmission of H.225.0 ARQ message	MC3	M	8.2.1.2.3	[ ]Yes
		NOT MC3	N/A		[ ]N/A
QHAO4	Support receipt of H.225.0 ACF message	MC3	M	8.2.1.2.4	[ ]Yes
		NOT MC3	N/A		[ ]N/A
QHAO5	Support receipt of H.225.0 ARJ message	MC3	M	8.2.1.2.5	[ ]Yes
		NOT MC3	N/A		[ ]N/A
QHAO6	Support receipt of H.225.0 CALL PROCEEDING message	MC3	M	8.2.1.2.6	[ ]Yes
		NOT MC3	N/A		[ ]N/A
QHAO7	Support receipt of H.225.0 ALERTING message	MC3	M	8.2.1.2.7	[ ]Yes
		NOT MC3	N/A		[ ]N/A
QHAO8	Support receipt of H.225.0 CONNECT message	MC3	M	8.2.1.2.8	[ ]Yes
		NOT MC3	N/A		[ ]N/A
Comments:					

© ISO/IEC 2002 – All rights reserved

Copyright International Organization for Standardization
Provided by IHS under license with ISO
No reproduction or networking permitted without license from IHS
Not for Resale

A.9 Call establishment from QSIG to H.323 with admission procedures and overlap sending in both QSIG and H.323

Table A.6 – Call establishment from QSIG to H.323 with admission procedures and overlap sending in both QSIG and H.323

Item	Question: Does the implementation...	Conditions for status	Status	Reference	Support
QHAOO1	Support receipt of QSIG SETUP message	MC4	M	8.2.1.3.1	[ ]Yes
		NOT MC4	N/A		[ ]N/A
QHAOO2	Support transmission of H.225.0 ARQ message	MC4	M	8.2.1.3.2	[ ]Yes
		NOT MC4	N/A		[ ]N/A
QHAOO3	Support receipt of QSIG INFORMATION message while awaiting response to H.225.0 ARQ message	MC4	M	8.2.1.3.3	[ ]Yes
		NOT MC4	N/A		[ ]N/A
QHAOO4	Support receipt of H.225.0 ACF message	MC4	M	8.2.1.3.4	[ ]Yes
		NOT MC4	N/A		[ ]N/A
QHAOO5	Support receipt of H.225.0 ARJ message	MC4	M	8.2.1.3.5	[ ]Yes
		NOT MC4	N/A		[ ]N/A
QHAOO6	Support receipt of QSIG INFORMATION message following receipt of H.225.0 ARJ message with rejectReason incompleteAddress	MC4	M	8.2.1.3.6	[ ]Yes
		NOT MC4	N/A		[ ]N/A
QHAOO7	Support receipt of QSIG INFORMATION message following transmission of H.225.0 SETUP message	MC4	M	8.2.1.3.7	[ ]Yes
		NOT MC4	N/A		[ ]N/A
QHAOO8	Support receipt of H.225.0 SETUP ACKNOWLEDGE message	MC4	M	8.2.1.3.8	[ ]Yes
		NOT MC4	N/A		[ ]N/A
QHAOO9	Support receipt of QSIG INFORMATION message following receipt of H.225.0 SETUP ACKNOWLEDGE message	MC4	M	8.2.1.3.9	[ ]Yes
		NOT MC4	N/A		[ ]N/A
QHAOO10	Support transmission of H.225.0 INFORMATION message	MC4	M	8.2.1.3.10	[ ]Yes
		NOT MC4	N/A		[ ]N/A
QHAOO11	Support receipt of H.225.0 CALL PROCEEDING message	MC4	M	8.2.1.3.11	[ ]Yes
		NOT MC4	N/A		[ ]N/A
QHAOO12	Support receipt of H.225.0 ALERTING message	MC4	M	8.2.1.3.12	[ ]Yes
		NOT MC4	N/A		[ ]N/A
QHAOO13	Support receipt of H.225.0 CONNECT message	MC4	M	8.2.1.3.13	[ ]Yes
		NOT MC4	N/A		[ ]N/A
Comments:					

© ISO/IEC 2002 – All rights reserved
Copyright International Organization for Standardization
Provided by IHS under license with ISO
No reproduction or networking permitted without license from IHS
Not for Resale

A.10 Call establishment from QSIG to H.323 using en bloc sending and no admission procedures

Table A.7 – Call establishment from QSIG to H.323 without admission procedures and en bloc sending

Item	Question: Does the implementation...	Conditions for status	Status	Reference	Support
QHN1	Support receipt of QSIG SETUP message	GR6	M	8.2.2.1.1	[ ]Yes
		NOT GR6	N/A		[ ]N/A
QHN2	Support receipt of H.225.0 ALERTING message	GR6	M	8.2.2.1.3	[ ]Yes
		NOT GR6	N/A		[ ]N/A
QHN3	Support receipt of H.225.0 CONNECT message	GR6	M	8.2.2.1.4	[ ]Yes
		NOT GR6	N/A		[ ]N/A
Comments:					

© ISO/IEC 2002 – All rights reserved

Copyright International Organization for Standardization
Provided by IHS under license with ISO
No reproduction or networking permitted without license from IHS
Not for Resale

A.11 Call establishment from QSIG to H.323 using overlap sending in QSIG only and no admission procedures

Table A.8 – Call establishment from QSIG to H.323 using overlap sending in QSIG only and no admission procedures

Item	Question: Does the implementation...	Conditions for status	Status	Reference	Support
QHNO1	Support receipt of QSIG SETUP message	GR6 AND MC3	M	8.2.2.2.1	[ ]Yes
		NOT(GR6 AND MC3)	N/A		[ ]N/A
QHNO2	Support receipt of QSIG INFORMATION message	GR6 AND MC3	M	8.2.2.2.2	[ ]Yes
		NOT(GR6 AND MC3)	N/A		[ ]N/A
QHNO3	Support receipt of H.225.0 CALL PROCEEDING message	GR6 AND MC3	M	8.2.2.2.3	[ ]Yes
		NOT(GR6 AND MC3)	N/A		[ ]N/A
QHNO4	Support receipt of H.225.0 ALERTING message	GR6 AND MC3	M	8.2.2.2.4	[ ]Yes
		NOT(GR6 AND MC3)	N/A		[ ]N/A
QHNO5	Support receipt of H.225.0 CONNECT message	GR6 AND MC3	M	8.2.2.2.5	[ ]Yes
		NOT(GR6 AND MC3)	N/A		[ ]N/A
Comments:					

© ISO/IEC 2002 – All rights reserved
Copyright International Organization for Standardization
Provided by IHS under license with ISO
No reproduction or networking permitted without license from IHS
Not for Resale

A.12 Call establishment from QSIG to H.323 using overlap sending in both QSIG and H.323 and no admission procedures

Table A.9 – Call establishment from QSIG to H.323 using overlap sending in both QSIG and H.323 and no admission procedures

Item	Question: Does the implementation...	Conditions for status	Status	Reference	Support
QHNOO1	Support receipt of QSIG SETUP message	GR6 AND MC4	M	8.2.2.3.1	
		NOT(GR6 AND MC4)	N/A		
QHNOO2	Support receipt of QSIG INFORMATION message before transmitting an H.225.0 SETUP message	GR6 AND MC4	M	8.2.2.3.2	[ ]Yes
		NOT(GR6 AND MC4)	N/A		[ ]N/A
QHNOO3	Support receipt of QSIG INFORMATION message following transmission of H.225.0 SETUP message	GR6 AND MC4	M	8.2.2.3.3	[ ]Yes
		NOT(GR6 AND MC4)	N/A		[ ]N/A
QHNOO4	Support receipt of H.225.0 SETUP ACKNOWLEDGE message	GR6 AND MC4	M	8.2.2.3.4	[ ]Yes
		NOT(GR6 AND MC4)	N/A		[ ]N/A
QHNOO5	Support receipt of QSIG INFORMATION message following receipt of H.225.0 SETUP ACKNOWLEDGE message	GR6 AND MC4	M	8.2.2.3.5	[ ]Yes
		NOT(GR6 AND MC4)	N/A		[ ]N/A
QHNOO6	Support transmission of H.225.0 INFORMATION message	GR6 AND MC4	M	8.2.2.3.6	[ ]Yes
		NOT(GR6 AND MC4)	N/A		[ ]N/A
QHNOO7	Support receipt of H.225.0 CALL PROCEEDING message	GR6 AND MC4	M	8.2.2.3.7	[ ]Yes
		NOT(GR6 AND MC4)	N/A		[ ]N/A
QHNOO8	Support receipt of H.225.0 ALERTING message	GR6 AND MC4	M	8.2.2.3.8	[ ]Yes
		NOT(GR6 AND MC4)	N/A		[ ]N/A
QHNOO9	Support receipt of H.225.0 CONNECT message	GR6 AND MC4	M	8.2.2.3.9	[ ]Yes
		NOT(GR6 AND MC4)	N/A		[ ]N/A
Comments:					

© ISO/IEC 2002 – All rights reserved

Copyright International Organization for Standardization
Provided by IHS under license with ISO
No reproduction or networking permitted without license from IHS
Not for Resale

A.13 Call establishment from H.323 to QSIG

Table A.10 – Call establishment from H.323 to QSIG

Item	Question: Does the implementation...	Conditions for status	Status	Reference	Support
HQ1	Support receipt of H.225.0 SETUP message		M	8.3.1	[ ]Yes
HQ2	Support receipt of H.225.0 INFORMATION message following transmission of QSIG SETUP message	MC5	M	8.3.2.1.	[ ]Yes
		NOT MC5	N/A		[ ]N/A
HQ3	Support receipt of QSIG SETUP ACKNOWLEDGE message	MC5	M	8.3.2.2.	[ ]Yes
		NOT MC5	N/A		[ ]N/A
HQ4	Support receipt of H.225.0 INFORMATION message following receipt of QSIG SETUP ACKNOWLEDGE message	MC5	M	8.3.2.3.	[ ]Yes
		NOT MC5	N/A		[ ]N/A
HQ5	Support transmission of QSIG INFORMATION message	MC5	M	8.3.2.4.	[ ]Yes
		NOT MC5	N/A		[ ]N/A
HQ6	Support receipt of QSIG CALL PROCEEDING message		M	8.3.3	[ ]Yes
HQ7	Support receipt of QSIG ALERTING message		M	8.3.4	[ ]Yes
HQ8	Support receipt of QSIG CONNECT message		M	8.3.5	[ ]Yes
Comments:					

A.14 PROGRESS message and Progress indicator information elements

Table A.11 – PROGRESS message and Progress indicator information elements

Item	Question: Does the implementation...	Conditions for status	Status	Reference	Support
PR1	Support receipt of Progress indicator information element in a QSIG message		M	8.4.1	[ ]Yes
PR2	Support receipt of Progress indicator information element in an H.225.0 message		M	8.4.2	[ ]Yes
PR3	Support transmission of Progress indicator information element in support of gateway-provided ring-back tone		M	8.4.3	[ ]Yes
Comments:					

--`,,```,,,,````-`-`,,`,,`,`,,`---

© ISO/IEC 2002 – All rights reserved
Copyright International Organization for Standardization
Provided by IHS under license with ISO
No reproduction or networking permitted without license from IHS
Not for Resale

A.15 Call clearing

Table A.12 – Call clearing

Item	Question: Does the implementation...	Conditions for status	Status	Reference	Support
CL1	Support call clearing initiated by QSIG		M	8.5.1	[ ]Yes
CL2	Support call clearing initiated by H.323		M	8.5.2	[ ]Yes
Comments:					

A.16 Numbering requirements

Table A.13 – Numbering requirements

Item	Question: Does the implementation...	Conditions for status	Status	Reference	Support
NU1	Provide support for numbering plans and types of numbers		M	9.1	[ ]Yes
NU2	Support mapping of numbers from QSIG to H.323		M	9.2	[ ]Yes
NU3	Support mapping of numbers from H.323 to QSIG		M	9.3	[ ]Yes
NU4	Handle presentation and screening indicators		M	9.4	[ ]Yes
NU5	Handle subaddresses		M	9.5	[ ]Yes
Comments:					

A.17 Security requirements

Table A.14 – Security requirements

Item	Question: Does the implementation...	Conditions for status	Status	Reference	Support
SE1	Support security requirements		M	10	[ ]Yes
Comments:					

© ISO/IEC 2002 – All rights reserved

Copyright International Organization for Standardization
Provided by IHS under license with ISO
No reproduction or networking permitted without license from IHS
Not for Resale

A.18 Requirements for support of basic services

Table A.15 – Requirements for support of basic services

Item	Question: Does the implementation...	Conditions for status	Status	Reference	Support
BS1	Support basic services for calls from QSIG to H.323		M	11.1	[ ]Yes
BS2	Support basic services for calls from H.323 to QSIG		M	11.2	[ ]Yes
Comments:					

A.19 Media channel establishment

Table A.16 – Media channel establishment

Item	Question: Does the implementation...	Conditions for status	Status	Reference	Support
ME1	Support media channel establishment		M	12	[ ]Yes
Comments:					

A.20 Requirements for the support of group 3 fax in accordance with H.323 annex D

Table A.17 – Requirements for the support of group 3 fax in accordance with H.323 annex D

Item	Question: Does the implementation...	Conditions for status	Status	Reference	Support
FAX1	Support start of fax transmission	MC8	M	13.1	[ ]Yes
		NOT MC8	N/A		[ ]N/A
FAX2	Support end of fax transmission	MC8	O	13.2	[ ]Yes [ ]No
		NOT MC8	N/A		[ ]N/A
Comments:					

© ISO/IEC 2002 – All rights reserved
Copyright International Organization for Standardization
Provided by IHS under license with ISO
No reproduction or networking permitted without license from IHS
Not for Resale

A.21 Requirements for the support of DTMF

Table A.18 – Requirements for the support of DTMF

Item	Question: Does the implementation...	Conditions for status	Status	Reference	Support
MF1	Support DTMF transmission from PISN to IP network and vice versa using H.245 userInputIndication messages in the IP network		M	14	[ ]Yes
MF2	Support DTMF transmission from PISN to IP network and vice versa using RTP on special logical channels in the IP network		O	14	[ ]Yes [ ]No
Comments:					

A.22 Requirements for the provision of ring-back tone

Table A.19 – Requirements for the provision of ring-back tone

Item	Question: Does the implementation...	Conditions for status	Status	Reference	Support
RBT1	Provide ring-back tone towards a calling user in the PISN		M	15	[ ]Yes
Comments:					

--`,,```,,,,````-`-`,,`,,`,`,,`---

© ISO/IEC 2002 – All rights reserved

Copyright International Organization for Standardization
Provided by IHS under license with ISO
No reproduction or networking permitted without license from IHS
Not for Resale

Annex B
(informative)

Example message sequences

B.1 Introduction

This annex shows some typical message sequences that can occur. The message mapping requirements of clause 8 permit variations on these sequences to occur. In each diagram QSIG messages are shown as arrows on the left side of the diagram and H.225.0 messages are shown as arrows on the right side of the diagram. On the right hand side of the diagram, broken arrows represent H.225.0 RAS messages and continuous arrows represent H.225.0 call control messages.

B.2 Message sequences for call establishment from QSIG to H.323 using admission procedures

The figures below show typical sequences of messages for successful call establishment from QSIG to H.323 using admission procedures.

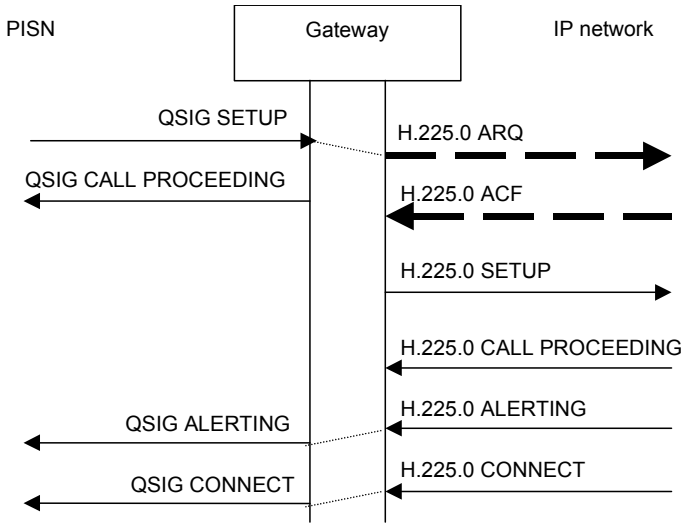

Figure 3 – Typical message sequence for successful call establishment from QSIG to H.323 using admission procedures and en bloc sending

© ISO/IEC 2002 – All rights reserved
Copyright International Organization for Standardization
Provided by IHS under license with ISO
No reproduction or networking permitted without license from IHS
Not for Resale

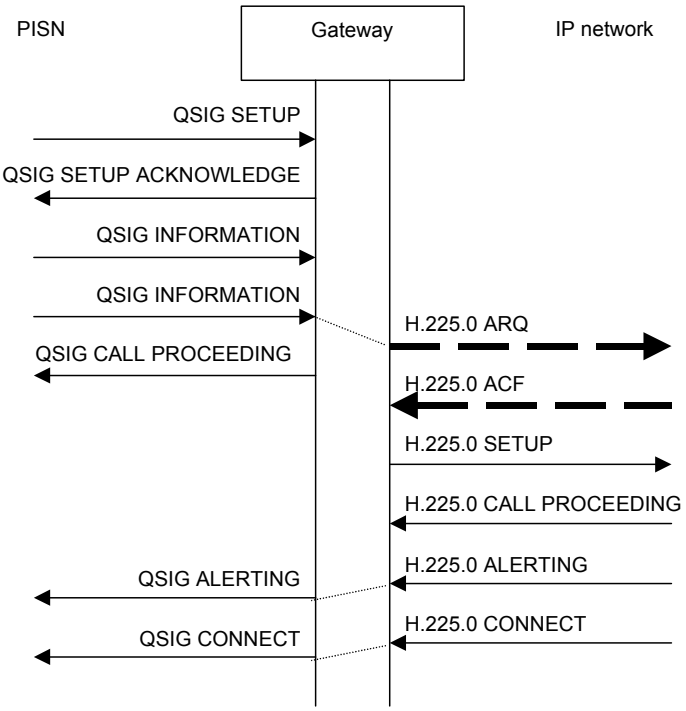

Figure 4 – Typical message sequence for successful call establishment from QSIG to H.323 using admission procedures and overlap sending in QSIG

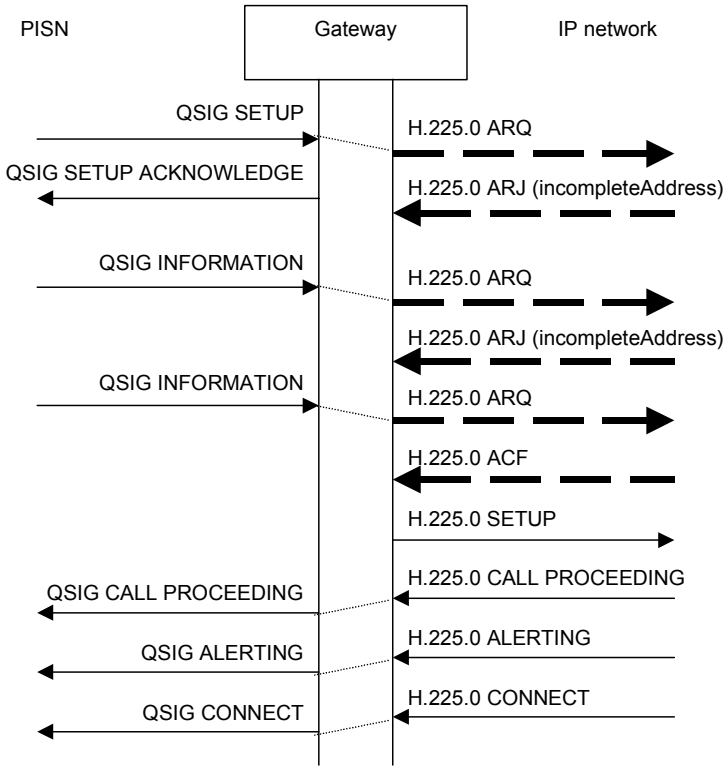

Figure 5 – Typical message sequence for successful call establishment from QSIG to H.323 using admission procedures and overlap sending in both QSIG and H.323 (RAS only)

© ISO/IEC 2002 – All rights reserved
Copyright International Organization for Standardization
Provided by IHS under license with ISO
No reproduction or networking permitted without license from IHS
Not for Resale

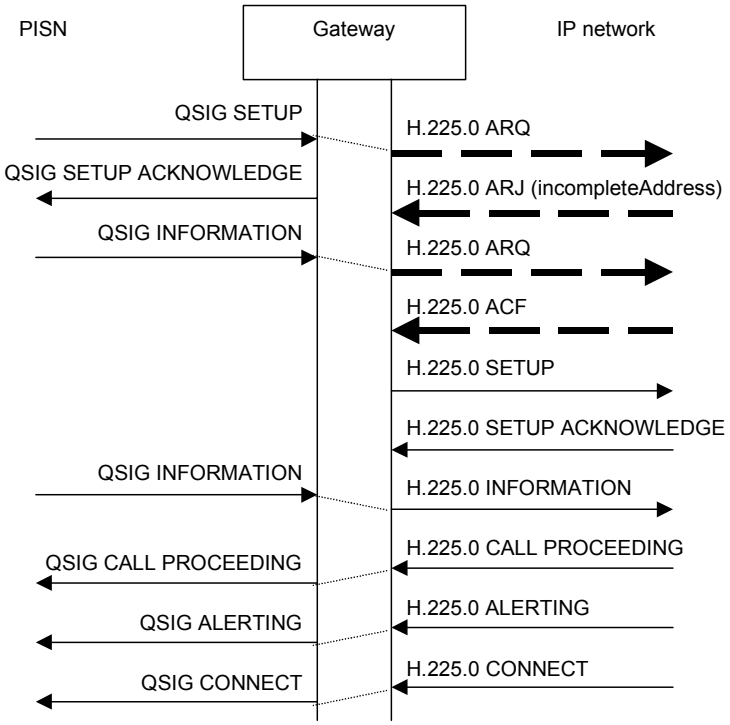

Figure 6 – Typical message sequence for successful call establishment from QSIG to H.323 using admission procedures and overlap sending in both QSIG and H.323 (RAS and call control)

B.3 Message sequences for call establishment from QSIG to H.323 without admission procedures

The figures below show typical sequences of messages for successful call establishment from QSIG to H.323 without admission procedures.

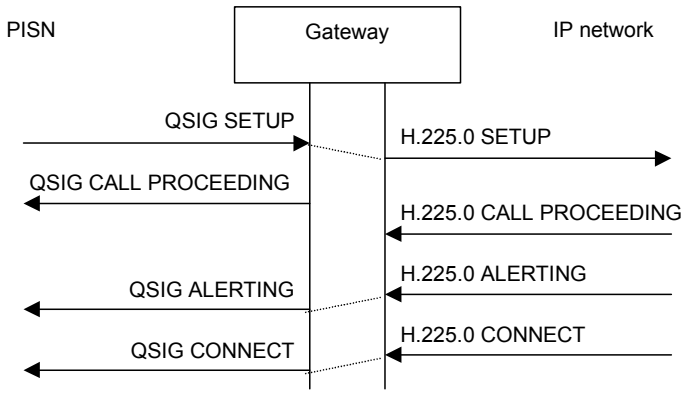

Figure 7 – Typical message sequence for successful call establishment from QSIG to H.323 using en bloc sending (no admission procedures)

--`,,```,,,,````-`-`,,`,,`,`,,`---

© ISO/IEC 2002 – All rights reserved
Copyright International Organization for Standardization
Provided by IHS under license with ISO
No reproduction or networking permitted without license from IHS
Not for Resale

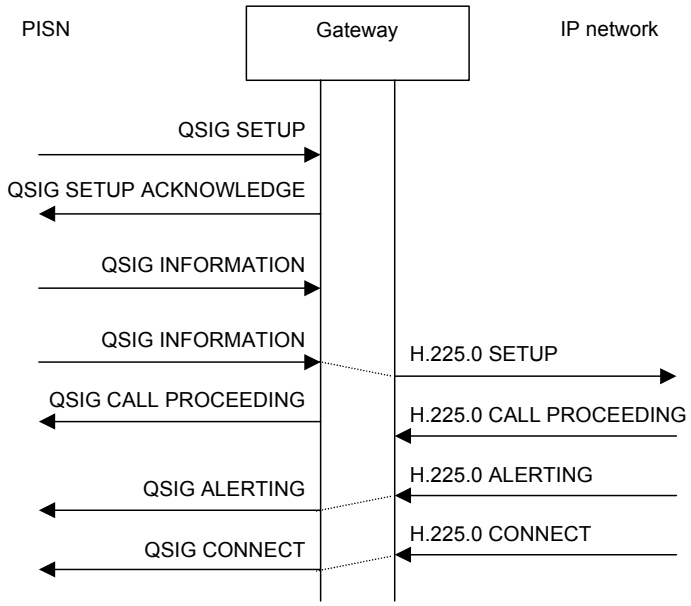

Figure 8 – Typical message sequence for successful call establishment from QSIG to H.323 using overlap sending in QSIG (no admission procedures)

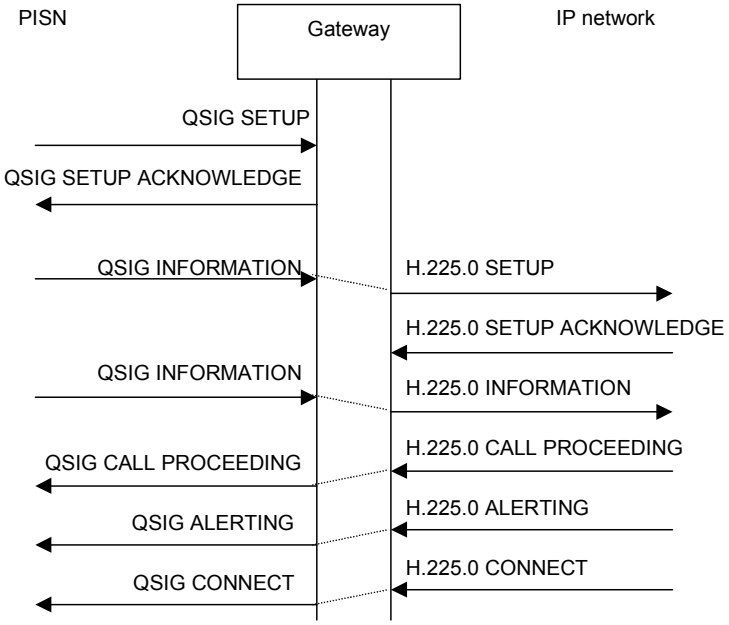

Figure 9 – Typical message sequence for successful call establishment from QSIG to H.323 using overlap sending in both QSIG and H.323 (no admission procedures)

--`,,```,,,,````-`-`,,`,,`,`,,`---
© ISO/IEC 2002 – All rights reserved
Copyright International Organization for Standardization
Provided by IHS under license with ISO
No reproduction or networking permitted without license from IHS
Not for Resale

B.4 Message sequences for call establishment from H.323 to QSIG

The figures below show typical sequences of messages for successful call establishment from QSIG to H.323. In these examples admission procedures are shown.

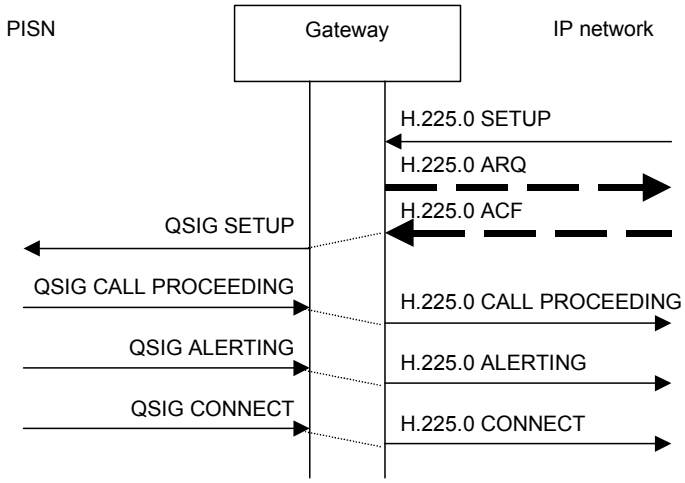

Figure 10 – Typical message sequence for successful call establishment from H.323 to QSIG using admission procedures and en bloc sending

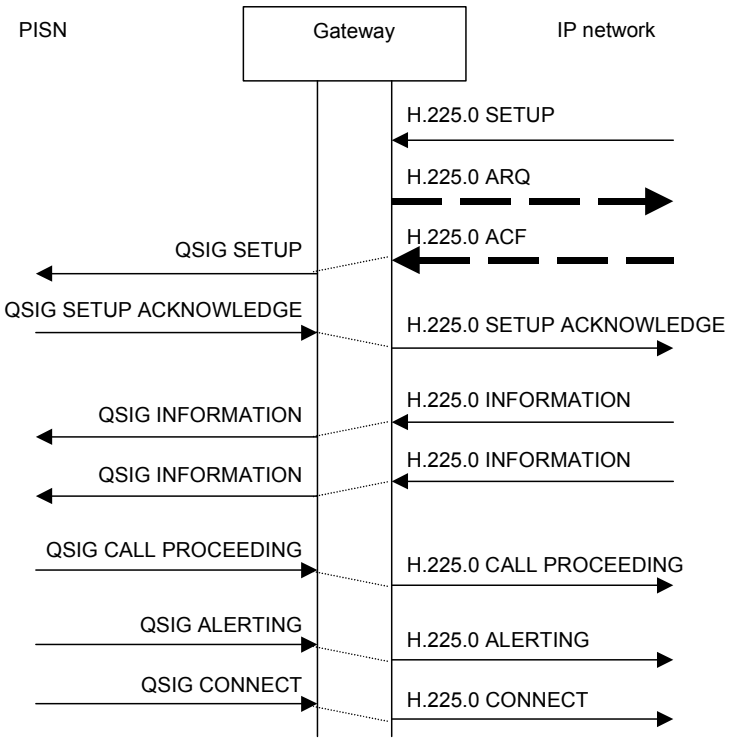

Figure 11 – Typical message sequence for successful call establishment from H.323 to QSIG using admission procedures and overlap sending in both QSIG and H.323

--`,,```,,,,````-`-`,,`,,`,`,,`---

© ISO/IEC 2002 – All rights reserved
Copyright International Organization for Standardization
Provided by IHS under license with ISO
No reproduction or networking permitted without license from IHS
Not for Resale

B.5 Message sequences for call clearing

The figures below show typical sequences of messages for call clearing. H.323 disengagement procedures are not shown.

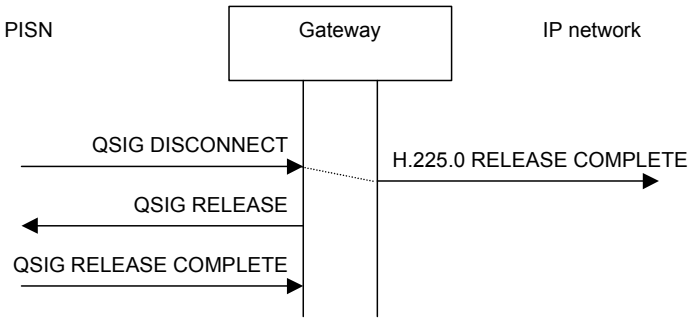

Figure 12 – Typical message sequence for call clearing initiated from PISN

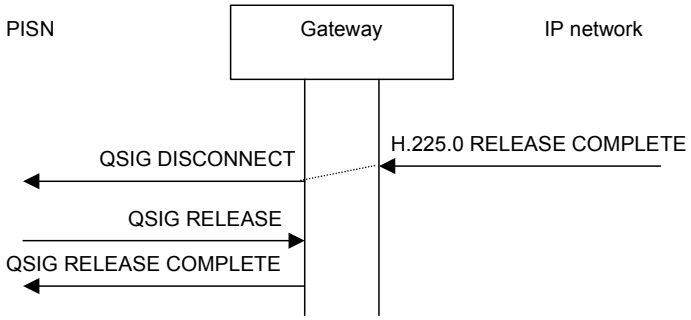

Figure 13 – Typical message sequence for call clearing initiated from IP network

© ISO/IEC 2002 – All rights reserved

Copyright International Organization for Standardization
Provided by IHS under license with ISO
No reproduction or networking permitted without license from IHS
Not for Resale

ICS 35.110

Price based on 39 pages

© ISO/IEC 2002 – All rights reserved
Copyright International Organization for Standardization
Provided by IHS under license with ISO
No reproduction or networking permitted without license from IHS
Not for Resale