INTERNATIONAL STANDARD

ISO/IEC 23003-1

First edition
2007-02-15

AMENDMENT 1
2008-08-15

Information technology — MPEG audio technologies —

Part 1: **MPEG Surround**

AMENDMENT 1: Conformance testing

Technologies de l'information — Technologies audio MPEG —

Partie 1: Ambiance MPEG

AMENDEMENT 1: Essai de conformité

Reference number
ISO/IEC 23003-1:2007/Amd. 1:2008(E)

© ISO/IEC 2008

Copyright International Organization for Standardization
Provided by IHS under license with ISO
No reproduction or networking permitted without license from IHS

Not for Resale

PDF disclaimer

This PDF file may contain embedded typefaces. In accordance with Adobe's licensing policy, this file may be printed or viewed but shall not be edited unless the typefaces which are embedded are licensed to and installed on the computer performing the editing. In downloading this file, parties accept therein the responsibility of not infringing Adobe's licensing policy. The ISO Central Secretariat accepts no liability in this area.

Adobe is a trademark of Adobe Systems Incorporated.

Details of the software products used to create this PDF file can be found in the General Info relative to the file; the PDF-creation parameters were optimized for printing. Every care has been taken to ensure that the file is suitable for use by ISO member bodies. In the unlikely event that a problem relating to it is found, please inform the Central Secretariat at the address given below.



COPYRIGHT PROTECTED DOCUMENT

© ISO/IEC 2008

All rights reserved. Unless otherwise specified, no part of this publication may be reproduced or utilized in any form or by any means, electronic or mechanical, including photocopying and microfilm, without permission in writing from either ISO at the address below or ISO's member body in the country of the requester.

ISO copyright office
Case postale 56 • CH-1211 Geneva 20
Tel. + 41 22 749 01 11
Fax + 41 22 749 09 47
E-mail copyright@iso.org
Web www.iso.org

Published in Switzerland

--`,,```,,,,````-`-`,,`,,`,`,,`---

::
Copyright International Organization for Standardization
Provided by IHS under license with ISO
No reproduction or networking permitted without license from IHS

© ISO/IEC 2008 – All rights reserved

Not for Resale

Foreword

ISO (the International Organization for Standardization) and IEC (the International Electrotechnical Commission) form the specialized system for worldwide standardization. National bodies that are members of ISO or IEC participate in the development of International Standards through technical committees established by the respective organization to deal with particular fields of technical activity. ISO and IEC technical committees collaborate in fields of mutual interest. Other international organizations, governmental and non-governmental, in liaison with ISO and IEC, also take part in the work. In the field of information technology, ISO and IEC have established a joint technical committee, ISO/IEC JTC 1.

International Standards are drafted in accordance with the rules given in the ISO/IEC Directives, Part 2.

The main task of the joint technical committee is to prepare International Standards. Draft International Standards adopted by the joint technical committee are circulated to national bodies for voting. Publication as an International Standard requires approval by at least 75 % of the national bodies casting a vote.

Attention is drawn to the possibility that some of the elements of this document may be the subject of patent rights. ISO and IEC shall not be held responsible for identifying any or all such patent rights.

Amendment 1 to ISO/IEC 23003-1:2007 was prepared by Joint Technical Committee ISO/IEC JTC 1, *Information technology*, Subcommittee SC 29, *Coding of audio, picture, multimedia and hypermedia information*.

— *Part 1: MPEG Surround*

© ISO/IEC 2008 – All rights reserved

Copyright International Organization for Standardization
Provided by IHS under license with ISO
No reproduction or networking permitted without license from IHS
Not for Resale

Copyright International Organization for Standardization
Provided by IHS under license with ISO
No reproduction or networking permitted without license from IHS
Not for Resale

Information technology — MPEG audio technologies —

Part 1:
MPEG Surround

AMENDMENT 1: Conformance testing

After Clause 7, add a new clause, Conformance testing, as given below:

8 Conformance testing

8.1 Introduction

This clause specifies conformance criteria for both bitstreams and decoders compliant with the MPEG Surround standard as defined in Clauses 1 to 7. This is done to assist implementers and to ensure interoperability.

8.2 Terms and definitions

The terms and definitions as stated in Clause 3 apply. Furthermore, the following terms and definitions will be used throughout this clause.

bitstream – Data encoded according to the MPEG Surround standard.

conformance test bitstream – A bitstream used for testing the conformance of an MPEG Surround decoder.

8.3 MPEG Surround conformance testing

Subclause 4.7 defines the Baseline MPEG Surround profile comprising 6 levels. Some conformance criteria apply to MPEG Surround in general, while others are specific to the Baseline MPEG Surround profile and its levels. Conformance shall be tested for the level of the profile with which a given bitstream or decoder claims to comply.

8.4 Bitstreams

8.4.1 Characteristics

The MPEG Surround AOT can be used in combination with various audio object types.

8.4.2 Test procedure

8.4.2.1 Introduction

An MPEG Surround bitstream shall have the syntax and semantics as specified in Clauses 1 to 7. This subclause defines the conformance criteria that shall be fulfilled by a compliant bitstream. These criteria are specified for the syntactic elements of the bitstream and for some parameters decoded from the MPEG Surround bitstream payload.

© ISO/IEC 2008 – All rights reserved

Copyright International Organization for Standardization
Provided by IHS under license with ISO
No reproduction or networking permitted without license from IHS
Not for Resale

8.4.2.2 Configuration header

8.4.2.2.1 SpatialSpecificConfig()

bsSamplingFrequencyIndex Shall be in the range 0x0..0xc or 0xf. For further restrictions, see 8.4.2.5.

bsSamplingFrequency For restrictions, see 8.4.2.5.

bsFrameLength For restrictions, see 8.4.2.5.

bsFreqRes Shall not be encoded with a value of 0.

bsTreeConfig Shall be in the range 0..6. For further restrictions, see 8.4.2.5.

bsQuantMode Shall not be encoded with a value of 3

bsOneIcc No restrictions apply.

bsArbitraryDownmix No restrictions apply.

bsFixedGainsSur Shall be in the range 0..4.

bsFixedGainsLFE Shall be in the range 0..4.

bsFixedGainsDMX No restrictions apply.

bsMatrixMode No restrictions apply.

bsTempShapeConfig Shall not be encoded with a value of 3.

bsDecorrConfig Shall not be encoded with a value of 3.

bs3DaudioMode No restrictions apply.

bsEnvQuantMode Shall be 0.

bs3DaudioHRTFset Shall be 0.

8.4.2.2.2 OttConfig()

bsOttBands Shall not be encoded with a value larger than the value of numBands as given by Table 39.

8.4.2.2.3 TttConfig()

bsTttDualMode No restrictions apply.

bsTttModeLow Shall be in the range 0..5.

bsTttModeHigh Shall be in the range 0..5.

bsTttBandsLow Shall not be encoded with a value larger than the value of numBands as given by Table 39.

8.4.2.2.4 ParamHRTFset()

bsHRTFfreqRes Shall not be encoded with a value of 0.

bsHRTFasymmetric No restrictions apply.

bsHRTFlevelLeft No restrictions apply.

bsHRTFlevelRight No restrictions apply.

bsHRTFphase No restrictions apply.

bsHRTFphaseLR No restrictions apply.

bsHRTFicc No restrictions apply.

bsHRTFiccLR No restrictions apply.

© ISO/IEC 2008 – All rights reserved
Copyright International Organization for Standardization
Provided by IHS under license with ISO
No reproduction or networking permitted without license from IHS
Not for Resale

8.4.2.2.5 SpatialExtensionConfig()

bsSacExtType No restrictions apply. Note that in case of values indicated as “reserved” in Table 54, the parsing function SpatialExtensionConfigData(bsSacExtType) shall return the value 0, such that possibly present data is read as bsFillBits (i.e., skipped) and correct parsing of the bitstream can continue.

bsSacExtLen No restrictions apply.

bsSacExtLenAdd No restrictions apply.

bsSacExtLenAddAdd No restrictions apply.

bsFillBits No restrictions apply.

8.4.2.2.6 SpatialExtensionConfigData(0)

The syntactic element SpatialExtensionConfigData(0) shall not be present if the helper variable numSlots has a value that is not listed in Table 55. Furthermore, if this syntactic element is present, the bitstream shall fulfil the requirements outlined in 6.1.13. For further restrictions, see 8.4.2.5.

bsResidualSamplingFrequencyIndex
Shall fulfil the requirements outlined in 6.1.13 and Table 88.

bsResidualFramesPerSpatialFrame
Shall fulfil the requirements outlined in 6.1.13 and Table 87.

8.4.2.2.7 ResidualConfig()

bsResidualPresent No restrictions apply.

bsResidualBands Shall not be encoded with a value larger than the value of **bsOttbands**.

8.4.2.2.8 SpatialExtensionConfigData(1)

The syntactic element SpatialExtensionConfigData(1) shall not be present if bsArbitraryDownmix is encoded with the value of 0 or the helper variable numSlots has a value that is not listed in Table 55. Furthermore, if this syntactic element is present, the bitstream shall fulfil the requirements outlined in 6.1.13.

bsArbitraryDownmixResidualSamplingFrequencyIndex
Shall fulfil the requirements outlined in 6.1.13 and Table 88.

bsArbitraryDownmixResidualFramesPerSpatialFrame
Shall fulfil the requirements outlined in 6.1.13 and Table 87.

bsArbitraryDownmixResidualBands
Shall not be encoded with a value larger than the value of numBands as given by Table 39.

8.4.2.2.9 TreeConfig()

bsOttBoxPresent No restrictions apply.

bsOttDefaultCld No restrictions apply.

bsOttModeLfe No restrictions apply.

bsOttBands Shall not be encoded with a value larger than the value of numBands as given by Table 39.

bsOutputChannelPos Shall be in the range 0..26.

For further restrictions, see 8.4.2.5.

© ISO/IEC 2008 – All rights reserved

Copyright International Organization for Standardization
Provided by IHS under license with ISO
No reproduction or networking permitted without license from IHS
Not for Resale

8.4.2.3 Bitstream payload

8.4.2.3.1 SpatialFrame()

bsIndependencyFlag No restrictions apply.

8.4.2.3.2 FramingInfo()

bsFramingType No restrictions apply.

bsNumParamSets For restrictions, see 8.4.2.5.

bsParamSlot[0] Shall be in the range 0..bsFrameLength.

bsDiffParamSlot[ps] Shall be in the range 0..bsFrameLength-bsParamSlot[ps-1]-1.

8.4.2.3.3 OttData()

No restrictions apply.

8.4.2.3.4 TttData()

ICC values of a certain Ttt box shall not be encoded with a value of 0 if (**bsTttModeLow** < 2 || (**bsTttDualMode** == 1 && **bsTttModeHigh** < 2)).

8.4.2.3.5 SmgData()

bsSmoothMode No restrictions apply.

bsSmoothTime No restrictions apply.

bsFreqResStrideSmg No restrictions apply.

bsSmgData No restrictions apply.

8.4.2.3.6 TempShapeData()

bsTempShapeEnable No restrictions apply.

bsTempShapeEnableChannel[ch]
No restrictions apply.

8.4.2.3.7 EnvelopeReshapeHuff()

hcod2D_EnvRes **bsCodeW** shall have a value out of a set of values as defined by column ‘codeword’ of Table A.25, and shall have a length as defined by the corresponding entry in column ‘length’.

8.4.2.3.8 ArbitraryDownmixData()

No restrictions apply.

8.4.2.3.9 EcData()

bsXXXdataMode shall fulfil the requirements outlined in 6.1.13. Shall not be encoded with the value 2 if residual coding is applied.

bsDataPairXXX Shall have the value 0 if setIdx == dataSets-1. No further restrictions apply.

bsQuantCoarseXXX No restrictions apply.

bsFreqResStrideXXX No restrictions apply.

© ISO/IEC 2008 – All rights reserved
Copyright International Organization for Standardization
Provided by IHS under license with ISO
No reproduction or networking permitted without license from IHS
Not for Resale

8.4.2.3.10 EcDataPair()

bsPcmCodingXXX No restrictions apply.

bsPilotCodingXXX No restrictions apply.

8.4.2.3.11 GroupedPcmData()

bsPcmWord No restrictions apply.

8.4.2.3.12 DiffHuffData()

hcodPilot_XXX **bsCodeW** shall have a value out of a set of values as defined by column 'codeword' of Tables A.2, A.3 or A.4, respectively, and shall have a length as defined by the corresponding entry in column 'length'.

bsDiffType No restrictions apply.

bsCodingScheme No restrictions apply.

bsPairing No restrictions apply.

bsDiffTimeDirection No restrictions apply.

8.4.2.3.13 HuffData1D()

hcodFirstBand_XXX **bsCodeW** shall have a value out of a set of values as defined by column 'codeword' of Tables A.2, A.3 or A.4, respectively, and shall have a length as defined by the corresponding entry in column 'length'.

hcod1D_XXX_YY **bsCodeW** shall have a value out of a set of values as defined by column 'codeword' of Tables A.5, A.6 or A.7, respectively, and shall have a length as defined by the corresponding entry in column 'length'.

bsSign No restrictions apply.

8.4.2.3.14 HuffData2DFreqPair(), HuffData2DTimePair()

hcodLavIdx **bsCodeW** shall have a value out of a set of values as defined by column 'codeword' of Table A.24, and shall have a length as defined by the corresponding entry in column 'length'.

hcod2D_XXX_YY_ZZ_LL_escape **bsCodeW** shall have a value out of a set of values as defined by column 'codeword' of Tables A.8, A.9 or A.10, respectively, and shall have a length as defined by the corresponding entry in column 'length'.

hcod2D_XXX_YY_ZZ_LL **bsCodeW** shall have a value out of a set of values as defined by column 'codeword' of the applicable table out of Tables A.11 to A.22, and shall have a length as defined by the corresponding entry in column 'length'.

8.4.2.3.15 SymmetryData()

bsSymBit[i] No restrictions apply.

8.4.2.3.16 LsbData()

bsLsb For restrictions see 8.4.2.3.24.

8.4.2.3.17 SpatialExtensionFrame()

No restrictions apply. Note that in case of bsSacExtType having values indicated as "reserved" in Table 54, the parsing function SpatialExtensionFrameData(bsSacExtType) shall return the value 0, such that possibly present data is read as bsFillBits (i.e., skipped) and correct parsing of the bitstream can continue.

© ISO/IEC 2008 – All rights reserved

Copyright International Organization for Standardization
Provided by IHS under license with ISO
No reproduction or networking permitted without license from IHS
Not for Resale

8.4.2.3.18 SpatialExtensionFrameData(0)

For restrictions see 8.4.2.5.

8.4.2.3.19 ResidualData()

bsIccDiffPresent[pi][ps] No restrictions apply.

hcod1D_ICC_Diff **bsCodeW** shall have a value out of a set of values as defined by column 'codeword' of Table A.23, and shall have a length as defined by the corresponding entry in column 'length'.

IccDiff[pi][ps][pb] The value of **IccDiff**[pi][ps][pb] shall not result in an invalid value for **idxICC**[pi][ps][pb].

individual_channel_stream()
Shall fulfil the restrictions outlined for this syntactic element in 5.1 and 5.2 and Tables 77 and 78.

8.4.2.3.20 SpatialExtensionFrameData(1)

No restrictions apply.

8.4.2.3.21 ArbitraryDownmixResidualData()

bsArbitraryDownmixResidualAbs[i]
No restrictions apply.

bsArbitraryDownmixResidualAlphaUpdateSet[i]
No restrictions apply.

individual_channel_stream()
Shall fulfil the restrictions outlined for this syntactic element in 5.1 and 5.2 and Tables 77 and 78.

channel_pair_element() Shall fulfil the restrictions outlined for this syntactic element in 5.1 and 5.2 and Tables 77 and 78. The parameter common_window shall be set to the value of 1.

8.4.2.3.22 SpatialExtensionFrameData(2)

No further restrictions apply.

8.4.2.3.23 ArbitraryTreeData()

No further restrictions apply.

8.4.2.3.24 Restrictions applying to decoded parameters

The following restrictions apply to parameters decoded from the MPEG Surround bitstream.

The helper variable **idxXXX**[pi][ps][pb] shall have values in the ranges as specified in 6.1.2.1 after the corresponding decoding process defined in 6.1.2 was carried out for the present SpatialFrame().

If **bs3DaudioMode** has the value 1, then the absolute value of the determinant of $\mathbf{H}_{\mathrm{Bin}}^{l,k}$ as defined in 6.11.5 shall be larger than or equal to 0.1, i.e.,

$$\left|\det\left(\mathbf{H}_{\mathrm{Bin}}^{l,k}\right)\right| \geq 0.1\,.$$

--`,,```,,,,````-`-`,,`,,`,`,,`---
© ISO/IEC 2008 – All rights reserved
Copyright International Organization for Standardization
Provided by IHS under license with ISO
No reproduction or networking permitted without license from IHS
Not for Resale

8.4.2.4 Transport of MPEG Surround data

8.4.2.4.1 Transport in an MPEG environment

8.4.2.4.1.1 Introduction

In case of transport of MPEG Surround data in an MPEG-4 environment, the following restrictions apply.

In case of SpatialSpecificConfig() is conveyed out-of-band, any in-band SpatialSpecificConfig() shall be identical to the out-of-band one.

In case of embedding of MPEG Surround data in MPEG-2/4 AAC payloads, the following restrictions apply. There must be at least one extension_payload() element with extension_type==EXT_SAC_DATA in each AAC frame in order to enable immediate implicit signalling.

In case of embedding of MPEG Surround data in MPEG-1/2 Layer I/II/III bistreams, the following restrictions apply. The first bit of the ancSyncword must be byte-aligned with respect to the first bit of the 0xFFF syncword of the MPEG-1/2 frame header. The AncDataElement() must be completely included in the ancillary data of a single MPEG-1/2 frame. There must be at least one AncDataElement() in the ancillary data of each MPEG-1/2 frame in order to enable immediate implicit signalling.

8.4.2.4.1.2 AncDataElement()

ancSyncword	Shall be 0x8E4.
ancType	No restrictions apply.
ancStart	No restrictions apply.
ancStop	No restrictions apply.
ancLenBytes	No restrictions apply.
ancLenBytesAdd	No restrictions apply.
ancCrcWord	Shall have the value as determined by the procedure specified in 7.2.4.
ancDataSegmentByte	A data block formed by concatenation of ancDataSegmentByte as specified in 7.2.4 shall, if ancType==0x0 or ancType==0x1, constitute one SacDataFrame() syntax element, padded at the end to obtain an integer number of bytes.

8.4.2.4.1.3 SacDataFrame(sacHeaderFlag)

sacHeaderFlag	No restrictions apply.
sacHeaderLen	No restrictions apply.
sacHeaderLenAdd	No restrictions apply.
bsFillBits	No restrictions apply.
sacTimeAlignFlag	No restrictions apply.
sacTimeAlign	Shall have an absolute value no larger than two times the number of samples in the MPEG Surround PCM frame as defined by **bsFrameLength** and **bsSamplingFrequencyIndex** or **bsSamplingFrequency**.

8.4.2.4.2 Transport over PCM channels

8.4.2.4.2.1 Introduction

In case of transport of MPEG Surround data over PCM channels, the following restrictions apply.

© ISO/IEC 2008 – All rights reserved
Copyright International Organization for Standardization
Provided by IHS under license with ISO
No reproduction or networking permitted without license from IHS
Not for Resale

The BuriedData() data shall be embedded in the LSBs of the PCM channels. Typically, 16 bit PCM samples are used. However, also other sample precisions shall be supported, e.g. 20 and 24 bits.

8.4.2.4.2.2 BuriedDataHeader()

bsBDSyncword Shall be 0xAA95.

bsBDChannels Shall have the value of the number of PCM channels in which the MPEG Surround data is embedded.

bsBDFramelength Shall define a PCM buried data frame size which is exactly the same as the MPEG Surround PCM frame size defined by **bsFrameLength** and **bsSamplingFrequencyIndex** or **bsSamplingFrequency.**

bdBDSubframes Shall fulfil the restrictions outlined for this syntactic element in 7.3.3.

bsBDReserved Shall be 0.

bsBDAlloc[channel][subframe]
Shall not exceed the value of n for n bit PCM samples.

bsBDHeaderCrc shall fulfil the restrictions outlined for this syntactic element in 7.3.3.

bsBDHeaderPadding Shall be 0.

8.4.2.4.2.3 BuriedDataFrame()

bsBDFramePadding Shall be 0.

8.4.2.4.2.4 BuriedDataElement()

bsBDType Each BuriedDataFrame() shall at least contain one BuriedDataElement() with **bsBDType** set to the value of 0 or 1. In the case of file based applications, the first frame shall contain a BuriedDataElement() with **bsBDType** set to the value of 1.

bsBDID Shall be set to a value in the range of 0..7, each value shall be used only once in a BuriedDataFrame().

bsBDLengthIdx No restrictions apply.

bsBDLength Shall fulfil the restriction outlined for this syntactic element in 7.3.3.

bsBDBytes Shall contain exactly one SacDataFrame().

bsBDDataCrc Shall fulfil the restrictions outlined for this syntactic element in 7.3.3.

8.4.2.5 Restrictions depending on profiles and levels

8.4.2.5.1 Introduction

Depending on the profile and level associated with the present MPEG Surround bitstream, further restrictions may apply.

8.4.2.5.2 Baseline MPEG Surround profile

For the Baseline MPEG Surround Profile, the following further restrictions apply.

--`,,```,,,,````-`-`,,`,,`,`,,`---
© ISO/IEC 2008 – All rights reserved
Copyright International Organization for Standardization
Provided by IHS under license with ISO
No reproduction or networking permitted without license from IHS
Not for Resale

bsSamplingFrequencyIndex
Shall be encoded with a value listed in Table AMD1.1.

bsSamplingFrequency Shall be encoded with a value listed in Table AMD1.1.

bsFrameLength Shall be in the range 3..71.

bsTreeConfig Shall be encoded with a value listed in Table AMD1.1.

Table AMD1.1 — Restrictions for the Baseline MPEG Surround Profile

	Level 1	**Level 2**	**Level 3**	**Level 4**	**Level 5**	**Level 6**
bsSamplingFrequencyIndex	0x3..0xc, 0xf	0x3..0xc, 0xf	0x3..0xc, 0xf	0x3..0xc, 0xf	0x3..0xc, 0xf	0x0..0xc, 0xf
bsSamplingFrequency	<= 48000	<= 48000	<= 48000	<= 48000	<= 48000	<= 96000
bsTreeConfig	0..4	0..4	0..4	0..4	0..6	0..6

TreeConfig() After decoding of the syntactic element TreeConfig(), the helper variable numOutChanAT shall have a value not larger than 32.

SpatialExtensionConfigData(0)
This syntactic element shall not be present in case of Level 1 or Level 2.

SpatialExtensionConfigData(1)
This syntactic element shall not be present.

bsNumParamSets Shall have a value not larger than bsFrameLength/4, where the division shall be interpreted as an ANSI C integer division.

8.5 Decoders

8.5.1 Characteristics

8.5.1.1 General

The MPEG Surround decoder can be implemented in two different versions:

- High Quality MPEG Surround
- Low Power MPEG Surround

8.5.1.2 Baseline MPEG Surround profile

- The ability to skip over residual data embedded in the MPEG Surround bitstream payload is mandatory for decoders of level 1 and 2. Decoders of level 3 and higher shall be able to decode and apply a residual bitstream payload.

8.5.2 Test procedure

8.5.2.1 Downmix decoders

An MPEG Surround decoder can be used in combination with a downmix decoder. In this case, the downmix decoder shall fulfil the conformance criteria that are applicable to it. If a downmix decoder other than PCM is used, the MPEG Surround conformance test procedure uses a technique that removes the influence of a potentially inaccurate downmix decoder to the maximum extent possible.

© ISO/IEC 2008 – All rights reserved

Copyright International Organization for Standardization
Provided by IHS under license with ISO
No reproduction or networking permitted without license from IHS
Not for Resale

8.5.2.2 MPEG Surround decoders

With regard to the definition and further details of the conformance criterion RMS/LSB being used to test MPEG Surround decoders, reference is made to ISO/IEC 14496-4.

The conformance test procedure for MPEG Surround decoders internally creates a reference for comparison, given the conformance test sequence and the output from the decoder under test. For cases where MPEG surround is combined with a downmix codec other than PCM this is accomplished by having every MPEG Surround conformance sequence be divided into two parts as outlined in Figure AMD1.1. The compressed data of the downmix for the two parts is identical but the MPEG Surround payload of the first part signals bsXXXdataMode = 0, causing the MPEG Surround decoder to pass the downmix signal through the QMF filterbank without applying any of the MPEG Surround tools, while the second part contains the actual MPEG Surround payload that is intended for use for conformance testing. This split does not exist for the conformance sequences where PCM is used as downmix signal. In these cases the reference for comparison is obtained directly from the PCM conformance sequence.

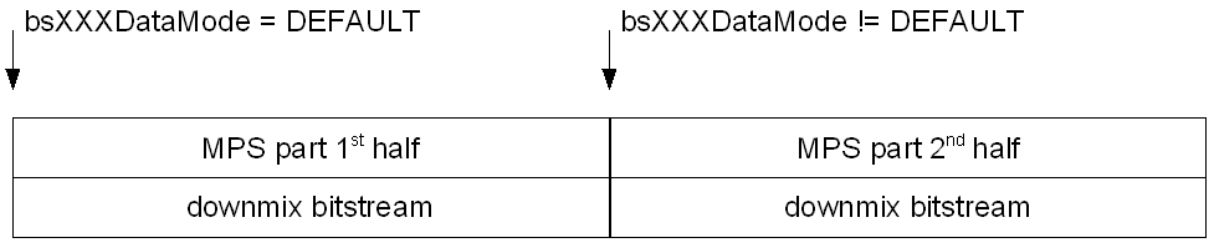

Figure AMD1.1 — The disposition of the MPEG Surround conformance test sequences

The conformance test procedure will

- read the conformance test sequence,
- store the output signal of the decoder under test during decoding of the first half of the bitstream.

Since this output signal is identical to the output-signal from the downmix decoder after QMF analysis and QMF synthesis, it can by means of a polyphase correction filter, be approximated to be the same signal as was used by the MPEG Surround decoder in the decoder under test.

For cases where the downmix decoder is connected directly in the QMF domain like the combination of AAC and SBR (HE AAC), the MPEG Surround conformance test procedure can only approximate the output of the decoder that was used prior to the QMF analysis step. The MPEG Surround conformance test sequences for such decoder combinations are designed to keep the influence of the QMF domain based downmix decoder minimal.

In parallel to storing the signal it shall also be fed to the reference MPEG Surround decoder along with the first half of the compressed MPEG Surround conformance sequence. This way, the reference MPEG Surround decoder will perform the exact same processing steps as the MPEG Surround decoder in the device under test, thereby ensuring that all internal states of both decoders match. The output signal of this decoder shall be compared to the input signal, i.e. the output signal of the decoder under test. This serves as a QMF test of the first half of the conformance file.

For the second half of the compressed data, an MPEG Surround processed reference signal shall be created based on the previously derived signal. This makes it possible to test the accuracy of the MPEG Surround decoder alone without influence from the underlying downmix decoder. Furthermore, the accuracy of the QMF implementation of the decoder under test is tested separately for every conformance sequence.

If HE AAC is used as downmix coder, and a complex QMF filter bank with a modified internal phase angle (hereinafter referred to as twiddles) is used in the decoder under test, the al_sbr_twi_* sequences shall be

© ISO/IEC 2008 – All rights reserved
Copyright International Organization for Standardization
Provided by IHS under license with ISO
No reproduction or networking permitted without license from IHS
Not for Resale

tested first. For further information regarding these sequences, please refer to ISO/IEC 14496-4:2004, 6.6.17.2.2 (SBR conformance test procedure).

In order to ensure that the QMF is implemented correctly, the output from the QMF test specific sequences *_qmf_* are compared to the internal reference applying the polyphase correction filter and storing the first half of the test sequence. This is done to detect errors in the QMF implementation, which would otherwise appear to be errors in the downmix decoder. By omitting the parts of the tool that are designed to neglect differences in the downmix decoder implementation for the QMF specific sequences, it is ensured that the QMF is implemented correctly.

If the decoder under test passes the conformance criterion for the dedicated QMF test sequences being specified in Table AMD1.5, this is a good indication that the QMF implementation is accurate. However, it is no definite guarantee, and hence it could happen that a QMF implementation that barely passes the conformance for the QMF test, does not pass conformance for other parts of the system due to the QMF implementation. Therefore, it is useful to observe the result from the QMF test for the first half for any of the conformance sequences. This can give a good indication of the origin of a potential error.

Figure AMD1.2 outlines a flowchart of the MPEG Surround conformance test procedure.

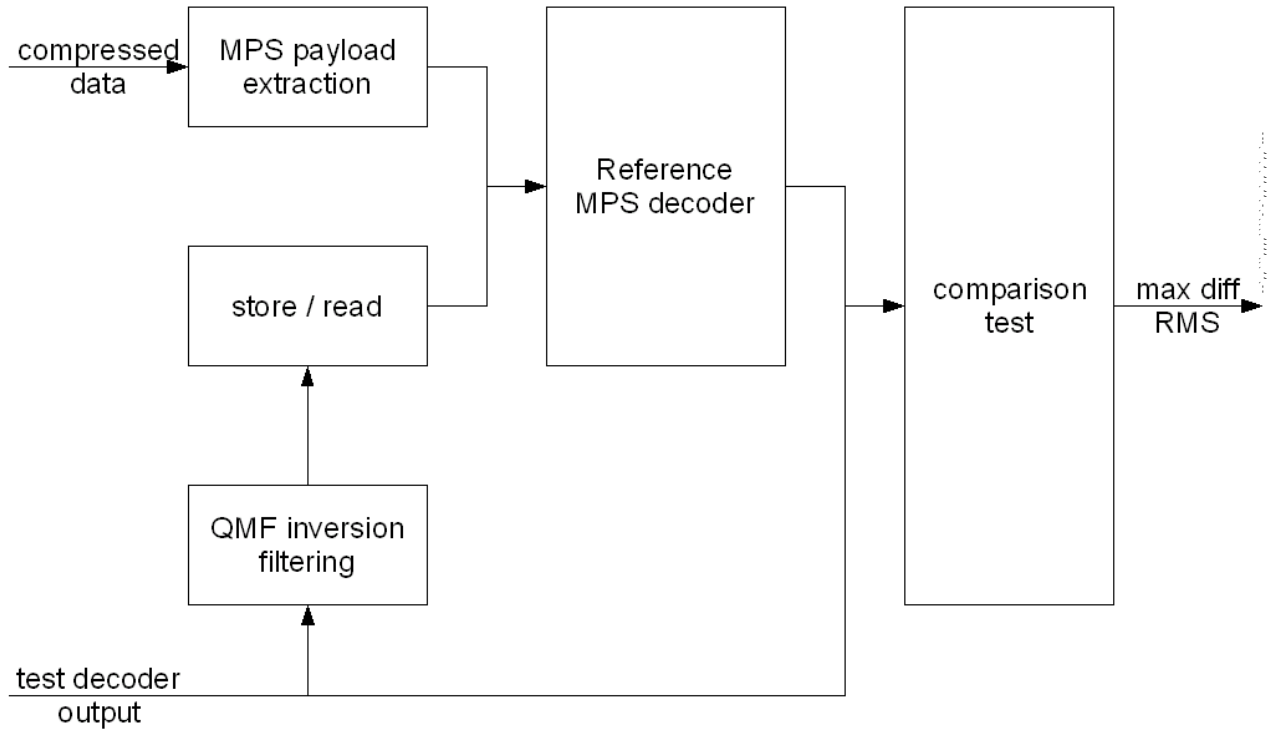

Figure AMD1.2 — Block diagram of the MPEG Surround conformance test procedure

The relevant modules are:

- QMF inversion filtering: This module applies a polyphase correction filter that approximates the inverse of the equivalent QMF filterbank in the decoder under test. The delay imposed by this module is given by: $delay = 64 \cdot \left(\frac{K-1}{2} \right)$, where $K = 25$ is the length of the polyphase filter. The polyphase filter matrix $\mathbf{H}(k,l)$ of size $64 \times K$ is tabulated in Table AMD1.2. The polyphase filtering step

© ISO/IEC 2008 – All rights reserved

Copyright International Organization for Standardization
Provided by IHS under license with ISO
No reproduction or networking permitted without license from IHS
Not for Resale

consists of the operation which maps a time signal $x(n)$ to $y(n)$, where $y(k+64i) = \sum_{l=0}^{K-1} \mathbf{H}(k,l)\, x\big(k+64(i-l)\big), \quad k = 0,1,\ldots,63.$ This module is not active for conformance bitstreams that use PCM as downmix signal.

- store / read: for the first half of the conformance test sequences this module stores the output of the QMF and in parallel routes it to the reference MPEG Surround decoder. For the second half of the conformance test sequences the signal that was stored from the first half is fed to the reference MPEG Surround decoder again.

- MPEG Surround payload extraction: This module extracts the MPEG Surround bitstream from the conformance test sequence and feeds it to the reference MPEG Surround decoder.

- Reference MPEG Surround decoder: This module is the reference MPEG Surround decoder according to Clauses 1 to 7 and Annexes A and B.

Table AMD1.2 — Polyphase filter matrix $\mathbf{H}(k,l)$ of size 64×25

```
H[64][25] = {
{  1.3994244e-07,  0.0000000e+00,  -2.9058151e-07,  0.0000000e+00,  -1.3757007e-05,
0.0000000e+00,  -3.8711165e-04,  0.0000000e+00,  3.6186281e-04,  0.0000000e+00,
3.7702263e-04,  0.0000000e+00,  1.0000049e+00,  0.0000000e+00,  3.7702263e-04,
0.0000000e+00,  3.6186281e-04,  0.0000000e+00,  -3.8711165e-04,
0.0000000e+00,  -1.3757007e-05,  0.0000000e+00,  -2.9058151e-07,  0.0000000e+00,
1.3994244e-07 },
{  1.3964719e-07,  0.0000000e+00,  -2.9742459e-07,  0.0000000e+00,  -1.3181384e-05,
0.0000000e+00,  -3.8654437e-04,  0.0000000e+00,  3.7214108e-04,  0.0000000e+00,
3.6667915e-04,  0.0000000e+00,  9.9999586e-01,  0.0000000e+00,  3.6667915e-04,
0.0000000e+00,  3.7214108e-04,  0.0000000e+00,  -3.8654437e-04,
0.0000000e+00,  -1.3181384e-05,  0.0000000e+00,  -2.9742459e-07,  0.0000000e+00,
1.3964719e-07 },
{  1.2357771e-07,  0.0000000e+00,  -2.6251894e-07,  0.0000000e+00,  -1.1825179e-05,
0.0000000e+00,  -3.6305811e-04,  0.0000000e+00,  3.4969594e-04,  0.0000000e+00,
3.6185021e-04,  0.0000000e+00,  1.0000091e+00,  0.0000000e+00,  3.6185021e-04,
0.0000000e+00,  3.4969594e-04,  0.0000000e+00,  -3.6305811e-04,
0.0000000e+00,  -1.1825179e-05,  0.0000000e+00,  -2.6251894e-07,  0.0000000e+00,
1.2357771e-07 },
{  1.2249635e-07,  0.0000000e+00,  -2.6464047e-07,  0.0000000e+00,  -1.1081786e-05,
0.0000000e+00,  -3.6102224e-04,  0.0000000e+00,  3.5541117e-04,  0.0000000e+00,
3.5963495e-04,  0.0000000e+00,  1.0000056e+00,  0.0000000e+00,  3.5963495e-04,
0.0000000e+00,  3.5541117e-04,  0.0000000e+00,  -3.6102224e-04,
0.0000000e+00,  -1.1081786e-05,  0.0000000e+00,  -2.6464047e-07,  0.0000000e+00,
1.2249635e-07 },
{  1.2588236e-07,  0.0000000e+00,  -2.6200461e-07,  0.0000000e+00,  -1.0461199e-05,
0.0000000e+00,  -3.6487563e-04,  0.0000000e+00,  3.4857949e-04,  0.0000000e+00,
3.6248811e-04,  0.0000000e+00,  9.9999030e-01,  0.0000000e+00,  3.6248811e-04,
0.0000000e+00,  3.4857949e-04,  0.0000000e+00,  -3.6487563e-04,
0.0000000e+00,  -1.0461199e-05,  0.0000000e+00,  -2.6200461e-07,  0.0000000e+00,
1.2588236e-07 },
{  1.3263993e-07,  0.0000000e+00,  -2.7003524e-07,  0.0000000e+00,  -9.8822524e-06,
0.0000000e+00,  -3.7356560e-04,  0.0000000e+00,  3.5176466e-04,  0.0000000e+00,
3.6332857e-04,  0.0000000e+00,  1.0000102e+00,  0.0000000e+00,  3.6332857e-04,
0.0000000e+00,  3.5176466e-04,  0.0000000e+00,  -3.7356560e-04,
0.0000000e+00,  -9.8822524e-06,  0.0000000e+00,  -2.7003524e-07,  0.0000000e+00,
1.3263993e-07 },
{  1.4163726e-07,  0.0000000e+00,  -2.7824870e-07,  0.0000000e+00,  -9.2977181e-06,
0.0000000e+00,  -3.8490239e-04,  0.0000000e+00,  3.5260588e-04,  0.0000000e+00,
3.6420460e-04,  0.0000000e+00,  1.0000110e+00,  0.0000000e+00,  3.6420460e-04,
0.0000000e+00,  3.5260588e-04,  0.0000000e+00,  -3.8490239e-04,
0.0000000e+00,  -9.2977181e-06,  0.0000000e+00,  -2.7824870e-07,  0.0000000e+00,
1.4163726e-07 },
```


© ISO/IEC 2008 – All rights reserved
Copyright International Organization for Standardization
Provided by IHS under license with ISO
No reproduction or networking permitted without license from IHS
Not for Resale

```
{  1.5225622e-07,  0.0000000e+00,  -2.9847658e-07,  0.0000000e+00,  -8.6322461e-06,
0.0000000e+00,  -3.9817229e-04,  0.0000000e+00,  3.6682773e-04,  0.0000000e+00,
3.6520318e-04,  0.0000000e+00,  1.0000023e+00,  0.0000000e+00,  3.6520318e-04,
0.0000000e+00,  3.6682773e-04,  0.0000000e+00,  -3.9817229e-04,
0.0000000e+00,  -8.6322461e-06,  0.0000000e+00,  -2.9847658e-07,  0.0000000e+00,
1.5225622e-07 },
{  1.6478236e-07,  0.0000000e+00,  -3.0432202e-07,  0.0000000e+00,  -7.9865548e-06,
0.0000000e+00,  -4.1291769e-04,  0.0000000e+00,  3.6138244e-04,  0.0000000e+00,
3.6524549e-04,  0.0000000e+00,  9.9999787e-01,  0.0000000e+00,  3.6524549e-04,
0.0000000e+00,  3.6138244e-04,  0.0000000e+00,  -4.1291769e-04,
0.0000000e+00,  -7.9865548e-06,  0.0000000e+00,  -3.0432202e-07,  0.0000000e+00,
1.6478236e-07 },
{  1.7700776e-07,  0.0000000e+00,  -3.1917655e-07,  0.0000000e+00,  -7.2525066e-06,
0.0000000e+00,  -4.2693986e-04,  0.0000000e+00,  3.6739108e-04,  0.0000000e+00,
3.7398884e-04,  0.0000000e+00,  1.0000029e+00,  0.0000000e+00,  3.7398884e-04,
0.0000000e+00,  3.6739108e-04,  0.0000000e+00,  -4.2693986e-04,
0.0000000e+00,  -7.2525066e-06,  0.0000000e+00,  -3.1917655e-07,  0.0000000e+00,
1.7700776e-07 },
{  1.9190022e-07,  0.0000000e+00,  -3.3997140e-07,  0.0000000e+00,  -6.4636648e-06,
0.0000000e+00,  -4.4353455e-04,  0.0000000e+00,  3.7785451e-04,  0.0000000e+00,
3.6609041e-04,  0.0000000e+00,  9.9999733e-01,  0.0000000e+00,  3.6609041e-04,
0.0000000e+00,  3.7785451e-04,  0.0000000e+00,  -4.4353455e-04,
0.0000000e+00,  -6.4636648e-06,  0.0000000e+00,  -3.3997140e-07,  0.0000000e+00,
1.9190022e-07 },
{  2.0687658e-07,  0.0000000e+00,  -3.5116608e-07,  0.0000000e+00,  -5.6529042e-06,
0.0000000e+00,  -4.5943578e-04,  0.0000000e+00,  3.7761421e-04,  0.0000000e+00,
3.6593984e-04,  0.0000000e+00,  1.0000094e+00,  0.0000000e+00,  3.6593984e-04,
0.0000000e+00,  3.7761421e-04,  0.0000000e+00,  -4.5943578e-04,
0.0000000e+00,  -5.6529042e-06,  0.0000000e+00,  -3.5116608e-07,  0.0000000e+00,
2.0687658e-07 },
{  2.2409953e-07,  0.0000000e+00,  -3.6155050e-07,  0.0000000e+00,  -4.8704421e-06,
0.0000000e+00,  -4.7715346e-04,  0.0000000e+00,  3.7500804e-04,  0.0000000e+00,
3.7232514e-04,  0.0000000e+00,  9.9998879e-01,  0.0000000e+00,  3.7232514e-04,
0.0000000e+00,  3.7500804e-04,  0.0000000e+00,  -4.7715346e-04,
0.0000000e+00,  -4.8704421e-06,  0.0000000e+00,  -3.6155050e-07,  0.0000000e+00,
2.2409953e-07 },
{  2.4214140e-07,  0.0000000e+00,  -3.7828056e-07,  0.0000000e+00,  -3.9947736e-06,
0.0000000e+00,  -4.9507069e-04,  0.0000000e+00,  3.7903876e-04,  0.0000000e+00,
3.6711132e-04,  0.0000000e+00,  1.0000145e+00,  0.0000000e+00,  3.6711132e-04,
0.0000000e+00,  3.7903876e-04,  0.0000000e+00,  -4.9507069e-04,
0.0000000e+00,  -3.9947736e-06,  0.0000000e+00,  -3.7828056e-07,  0.0000000e+00,
2.4214140e-07 },
{  2.5911752e-07,  0.0000000e+00,  -3.9510017e-07,  0.0000000e+00,  -3.1209281e-06,
0.0000000e+00,  -5.1130084e-04,  0.0000000e+00,  3.8404997e-04,  0.0000000e+00,
3.7099966e-04,  0.0000000e+00,  9.9999511e-01,  0.0000000e+00,  3.7099966e-04,
0.0000000e+00,  3.8404997e-04,  0.0000000e+00,  -5.1130084e-04,
0.0000000e+00,  -3.1209281e-06,  0.0000000e+00,  -3.9510017e-07,  0.0000000e+00,
2.5911752e-07 },
{  2.7884610e-07,  0.0000000e+00,  -4.0799614e-07,  0.0000000e+00,  -2.2609589e-06,
0.0000000e+00,  -5.2960881e-04,  0.0000000e+00,  3.8353187e-04,  0.0000000e+00,
3.7634198e-04,  0.0000000e+00,  9.9999409e-01,  0.0000000e+00,  3.7634198e-04,
0.0000000e+00,  3.8353187e-04,  0.0000000e+00,  -5.2960881e-04,
0.0000000e+00,  -2.2609589e-06,  0.0000000e+00,  -4.0799614e-07,  0.0000000e+00,
2.7884610e-07 },
{  2.9602788e-07,  0.0000000e+00,  -4.2291064e-07,  0.0000000e+00,  -1.3532960e-06,
0.0000000e+00,  -5.4495744e-04,  0.0000000e+00,  3.8704406e-04,  0.0000000e+00,
3.7601779e-04,  0.0000000e+00,  1.0000058e+00,  0.0000000e+00,  3.7601779e-04,
0.0000000e+00,  3.8704406e-04,  0.0000000e+00,  -5.4495744e-04,
0.0000000e+00,  -1.3532960e-06,  0.0000000e+00,  -4.2291064e-07,  0.0000000e+00,
2.9602788e-07 },
{  3.1619118e-07,  0.0000000e+00,  -4.3132034e-07,  0.0000000e+00,  -5.2733039e-07,
0.0000000e+00,  -5.6257657e-04,  0.0000000e+00,  3.8295297e-04,  0.0000000e+00,
3.6733911e-04,  0.0000000e+00,  9.9999517e-01,  0.0000000e+00,  3.6733911e-04,
0.0000000e+00,  3.8295297e-04,  0.0000000e+00,  -5.6257657e-04,
0.0000000e+00,  -5.2733039e-07,  0.0000000e+00,  -4.3132034e-07,  0.0000000e+00,
3.1619118e-07 },
```

© ISO/IEC 2008 – All rights reserved

Copyright International Organization for Standardization
Provided by IHS under license with ISO
No reproduction or networking permitted without license from IHS
Not for Resale

```
{  3.3473225e-07,  0.0000000e+00,  -4.2760192e-07,  0.0000000e+00,  2.9030487e-07,
0.0000000e+00,  -5.7827802e-04,  0.0000000e+00,  3.6988876e-04,  0.0000000e+00,
3.8353349e-04,  0.0000000e+00,  1.0000049e+00,  0.0000000e+00,  3.8353349e-04,
0.0000000e+00,  3.6988876e-04,  0.0000000e+00,  -5.7827802e-04,  0.0000000e+00,
2.9030487e-07,  0.0000000e+00,  -4.2760192e-07,  0.0000000e+00,  3.3473225e-07 },
{  3.5431225e-07,  0.0000000e+00,  -4.6086255e-07,  0.0000000e+00,  1.1840786e-06,
0.0000000e+00,  -5.9436815e-04,  0.0000000e+00,  3.8840594e-04,  0.0000000e+00,
3.7925529e-04,  0.0000000e+00,  9.9999727e-01,  0.0000000e+00,  3.7925529e-04,
0.0000000e+00,  3.8840594e-04,  0.0000000e+00,  -5.9436815e-04,  0.0000000e+00,
1.1840786e-06,  0.0000000e+00,  -4.6086255e-07,  0.0000000e+00,  3.5431225e-07 },
{  3.7197036e-07,  0.0000000e+00,  -4.5896401e-07,  0.0000000e+00,  1.9141738e-06,
0.0000000e+00,  -6.0860488e-04,  0.0000000e+00,  3.7822182e-04,  0.0000000e+00,
3.7854051e-04,  0.0000000e+00,  1.0000007e+00,  0.0000000e+00,  3.7854051e-04,
0.0000000e+00,  3.7822182e-04,  0.0000000e+00,  -6.0860488e-04,  0.0000000e+00,
1.9141738e-06,  0.0000000e+00,  -4.5896401e-07,  0.0000000e+00,  3.7197036e-07 },
{  3.9094028e-07,  0.0000000e+00,  -4.7393409e-07,  0.0000000e+00,  2.7060785e-06,
0.0000000e+00,  -6.2349656e-04,  0.0000000e+00,  3.8166686e-04,  0.0000000e+00,
3.7728579e-04,  0.0000000e+00,  1.0000029e+00,  0.0000000e+00,  3.7728579e-04,
0.0000000e+00,  3.8166686e-04,  0.0000000e+00,  -6.2349656e-04,  0.0000000e+00,
2.7060785e-06,  0.0000000e+00,  -4.7393409e-07,  0.0000000e+00,  3.9094028e-07 },
{  4.0641634e-07,  0.0000000e+00,  -4.6408426e-07,  0.0000000e+00,  3.3154721e-06,
0.0000000e+00,  -6.3548893e-04,  0.0000000e+00,  3.6713020e-04,  0.0000000e+00,
3.8524393e-04,  0.0000000e+00,  9.9999889e-01,  0.0000000e+00,  3.8524393e-04,
0.0000000e+00,  3.6713020e-04,  0.0000000e+00,  -6.3548893e-04,  0.0000000e+00,
3.3154721e-06,  0.0000000e+00,  -4.6408426e-07,  0.0000000e+00,  4.0641634e-07 },
{  4.2228094e-07,  0.0000000e+00,  -4.8785101e-07,  0.0000000e+00,  4.0367952e-06,
0.0000000e+00,  -6.4736219e-04,  0.0000000e+00,  3.7917058e-04,  0.0000000e+00,
3.8470839e-04,  0.0000000e+00,  9.9999693e-01,  0.0000000e+00,  3.8470839e-04,
0.0000000e+00,  3.7917058e-04,  0.0000000e+00,  -6.4736219e-04,  0.0000000e+00,
4.0367952e-06,  0.0000000e+00,  -4.8785101e-07,  0.0000000e+00,  4.2228094e-07 },
{  4.3772348e-07,  0.0000000e+00,  -4.8667868e-07,  0.0000000e+00,  4.6238900e-06,
0.0000000e+00,  -6.5889757e-04,  0.0000000e+00,  3.7190069e-04,  0.0000000e+00,
3.7260942e-04,  0.0000000e+00,  9.9999990e-01,  0.0000000e+00,  3.7260942e-04,
0.0000000e+00,  3.7190069e-04,  0.0000000e+00,  -6.5889757e-04,  0.0000000e+00,
4.6238900e-06,  0.0000000e+00,  -4.8667868e-07,  0.0000000e+00,  4.3772348e-07 },
{  4.5021388e-07,  0.0000000e+00,  -4.9993260e-07,  0.0000000e+00,  5.1350584e-06,
0.0000000e+00,  -6.6797436e-04,  0.0000000e+00,  3.7716353e-04,  0.0000000e+00,
3.8661818e-04,  0.0000000e+00,  9.9999730e-01,  0.0000000e+00,  3.8661818e-04,
0.0000000e+00,  3.7716353e-04,  0.0000000e+00,  -6.6797436e-04,  0.0000000e+00,
5.1350584e-06,  0.0000000e+00,  -4.9993260e-07,  0.0000000e+00,  4.5021388e-07 },
{  4.6123548e-07,  0.0000000e+00,  -4.9227744e-07,  0.0000000e+00,  5.5482076e-06,
0.0000000e+00,  -6.7602498e-04,  0.0000000e+00,  3.6724077e-04,  0.0000000e+00,
3.8514159e-04,  0.0000000e+00,  1.0000002e+00,  0.0000000e+00,  3.8514159e-04,
0.0000000e+00,  3.6724077e-04,  0.0000000e+00,  -6.7602498e-04,  0.0000000e+00,
5.5482076e-06,  0.0000000e+00,  -4.9227744e-07,  0.0000000e+00,  4.6123548e-07 },
{  4.7093342e-07,  0.0000000e+00,  -5.0788307e-07,  0.0000000e+00,  5.9620807e-06,
0.0000000e+00,  -6.8286929e-04,  0.0000000e+00,  3.7519562e-04,  0.0000000e+00,
3.8270037e-04,  0.0000000e+00,  1.0000083e+00,  0.0000000e+00,  3.8270037e-04,
0.0000000e+00,  3.7519562e-04,  0.0000000e+00,  -6.8286929e-04,  0.0000000e+00,
5.9620807e-06,  0.0000000e+00,  -5.0788307e-07,  0.0000000e+00,  4.7093342e-07 },
{  4.7796038e-07,  0.0000000e+00,  -4.9866528e-07,  0.0000000e+00,  6.2078279e-06,
0.0000000e+00,  -6.8793904e-04,  0.0000000e+00,  3.6589354e-04,  0.0000000e+00,
3.8531463e-04,  0.0000000e+00,  9.9999545e-01,  0.0000000e+00,  3.8531463e-04,
0.0000000e+00,  3.6589354e-04,  0.0000000e+00,  -6.8793904e-04,  0.0000000e+00,
6.2078279e-06,  0.0000000e+00,  -4.9866528e-07,  0.0000000e+00,  4.7796038e-07 },
{  4.8431598e-07,  0.0000000e+00,  -5.0620252e-07,  0.0000000e+00,  6.4581137e-06,
0.0000000e+00,  -6.9238442e-04,  0.0000000e+00,  3.6910310e-04,  0.0000000e+00,
3.8267438e-04,  0.0000000e+00,  1.0000074e+00,  0.0000000e+00,  3.8267438e-04,
0.0000000e+00,  3.6910310e-04,  0.0000000e+00,  -6.9238442e-04,  0.0000000e+00,
6.4581137e-06,  0.0000000e+00,  -5.0620252e-07,  0.0000000e+00,  4.8431598e-07 },
{  4.8704099e-07,  0.0000000e+00,  -5.0692875e-07,  0.0000000e+00,  6.5691230e-06,
0.0000000e+00,  -6.9429199e-04,  0.0000000e+00,  3.6870298e-04,  0.0000000e+00,
3.8569997e-04,  0.0000000e+00,  1.0000058e+00,  0.0000000e+00,  3.8569997e-04,
0.0000000e+00,  3.6870298e-04,  0.0000000e+00,  -6.9429199e-04,  0.0000000e+00,
6.5691230e-06,  0.0000000e+00,  -5.0692875e-07,  0.0000000e+00,  4.8704099e-07 },
```


© ISO/IEC 2008 – All rights reserved
Copyright International Organization for Standardization
Provided by IHS under license with ISO
No reproduction or networking permitted without license from IHS
Not for Resale

```
{  4.8817909e-07,  0.0000000e+00,  -5.0914948e-07,  0.0000000e+00,  6.6161365e-06,
0.0000000e+00,  -6.9506895e-04,  0.0000000e+00,  3.6987590e-04,  0.0000000e+00,
3.8264932e-04,  0.0000000e+00,  9.9998602e-01,  0.0000000e+00,  3.8264932e-04,
0.0000000e+00,  3.6987590e-04,  0.0000000e+00,  -6.9506895e-04,  0.0000000e+00,
6.6161365e-06,  0.0000000e+00,  -5.0914948e-07,  0.0000000e+00,  4.8817909e-07 },
{  4.8704099e-07,  0.0000000e+00,  -5.0692875e-07,  0.0000000e+00,  6.5691230e-06,
0.0000000e+00,  -6.9429199e-04,  0.0000000e+00,  3.6870298e-04,  0.0000000e+00,
3.8569997e-04,  0.0000000e+00,  1.0000058e+00,  0.0000000e+00,  3.8569997e-04,
0.0000000e+00,  3.6870298e-04,  0.0000000e+00,  -6.9429199e-04,  0.0000000e+00,
6.5691230e-06,  0.0000000e+00,  -5.0692875e-07,  0.0000000e+00,  4.8704099e-07 },
{  4.8431598e-07,  0.0000000e+00,  -5.0620252e-07,  0.0000000e+00,  6.4581137e-06,
0.0000000e+00,  -6.9238442e-04,  0.0000000e+00,  3.6910310e-04,  0.0000000e+00,
3.8267438e-04,  0.0000000e+00,  1.0000074e+00,  0.0000000e+00,  3.8267438e-04,
0.0000000e+00,  3.6910310e-04,  0.0000000e+00,  -6.9238442e-04,  0.0000000e+00,
6.4581137e-06,  0.0000000e+00,  -5.0620252e-07,  0.0000000e+00,  4.8431598e-07 },
{  4.7796038e-07,  0.0000000e+00,  -4.9866528e-07,  0.0000000e+00,  6.2078279e-06,
0.0000000e+00,  -6.8793904e-04,  0.0000000e+00,  3.6589354e-04,  0.0000000e+00,
3.8531463e-04,  0.0000000e+00,  9.9999545e-01,  0.0000000e+00,  3.8531463e-04,
0.0000000e+00,  3.6589354e-04,  0.0000000e+00,  -6.8793904e-04,  0.0000000e+00,
6.2078279e-06,  0.0000000e+00,  -4.9866528e-07,  0.0000000e+00,  4.7796038e-07 },
{  4.7093342e-07,  0.0000000e+00,  -5.0788307e-07,  0.0000000e+00,  5.9620807e-06,
0.0000000e+00,  -6.8286929e-04,  0.0000000e+00,  3.7519562e-04,  0.0000000e+00,
3.8270037e-04,  0.0000000e+00,  1.0000083e+00,  0.0000000e+00,  3.8270037e-04,
0.0000000e+00,  3.7519562e-04,  0.0000000e+00,  -6.8286929e-04,  0.0000000e+00,
5.9620807e-06,  0.0000000e+00,  -5.0788307e-07,  0.0000000e+00,  4.7093342e-07 },
{  4.6123548e-07,  0.0000000e+00,  -4.9227744e-07,  0.0000000e+00,  5.5482076e-06,
0.0000000e+00,  -6.7602498e-04,  0.0000000e+00,  3.6724077e-04,  0.0000000e+00,
3.8514159e-04,  0.0000000e+00,  1.0000002e+00,  0.0000000e+00,  3.8514159e-04,
0.0000000e+00,  3.6724077e-04,  0.0000000e+00,  -6.7602498e-04,  0.0000000e+00,
5.5482076e-06,  0.0000000e+00,  -4.9227744e-07,  0.0000000e+00,  4.6123548e-07 },
{  4.5021388e-07,  0.0000000e+00,  -4.9993260e-07,  0.0000000e+00,  5.1350584e-06,
0.0000000e+00,  -6.6797436e-04,  0.0000000e+00,  3.7716353e-04,  0.0000000e+00,
3.8661818e-04,  0.0000000e+00,  9.9999730e-01,  0.0000000e+00,  3.8661818e-04,
0.0000000e+00,  3.7716353e-04,  0.0000000e+00,  -6.6797436e-04,  0.0000000e+00,
5.1350584e-06,  0.0000000e+00,  -4.9993260e-07,  0.0000000e+00,  4.5021388e-07 },
{  4.3772348e-07,  0.0000000e+00,  -4.8667868e-07,  0.0000000e+00,  4.6238900e-06,
0.0000000e+00,  -6.5889757e-04,  0.0000000e+00,  3.7190069e-04,  0.0000000e+00,
3.7260942e-04,  0.0000000e+00,  9.9999990e-01,  0.0000000e+00,  3.7260942e-04,
0.0000000e+00,  3.7190069e-04,  0.0000000e+00,  -6.5889757e-04,  0.0000000e+00,
4.6238900e-06,  0.0000000e+00,  -4.8667868e-07,  0.0000000e+00,  4.3772348e-07 },
{  4.2228094e-07,  0.0000000e+00,  -4.8785101e-07,  0.0000000e+00,  4.0367952e-06,
0.0000000e+00,  -6.4736219e-04,  0.0000000e+00,  3.7917058e-04,  0.0000000e+00,
3.8470839e-04,  0.0000000e+00,  9.9999693e-01,  0.0000000e+00,  3.8470839e-04,
0.0000000e+00,  3.7917058e-04,  0.0000000e+00,  -6.4736219e-04,  0.0000000e+00,
4.0367952e-06,  0.0000000e+00,  -4.8785101e-07,  0.0000000e+00,  4.2228094e-07 },
{  4.0641634e-07,  0.0000000e+00,  -4.6408426e-07,  0.0000000e+00,  3.3154721e-06,
0.0000000e+00,  -6.3548893e-04,  0.0000000e+00,  3.6713020e-04,  0.0000000e+00,
3.8524393e-04,  0.0000000e+00,  9.9999889e-01,  0.0000000e+00,  3.8524393e-04,
0.0000000e+00,  3.6713020e-04,  0.0000000e+00,  -6.3548893e-04,  0.0000000e+00,
3.3154721e-06,  0.0000000e+00,  -4.6408426e-07,  0.0000000e+00,  4.0641634e-07 },
{  3.9094028e-07,  0.0000000e+00,  -4.7393409e-07,  0.0000000e+00,  2.7060785e-06,
0.0000000e+00,  -6.2349656e-04,  0.0000000e+00,  3.8166686e-04,  0.0000000e+00,
3.7728579e-04,  0.0000000e+00,  1.0000029e+00,  0.0000000e+00,  3.7728579e-04,
0.0000000e+00,  3.8166686e-04,  0.0000000e+00,  -6.2349656e-04,  0.0000000e+00,
2.7060785e-06,  0.0000000e+00,  -4.7393409e-07,  0.0000000e+00,  3.9094028e-07 },
{  3.7197036e-07,  0.0000000e+00,  -4.5896401e-07,  0.0000000e+00,  1.9141738e-06,
0.0000000e+00,  -6.0860488e-04,  0.0000000e+00,  3.7822182e-04,  0.0000000e+00,
3.7854051e-04,  0.0000000e+00,  1.0000007e+00,  0.0000000e+00,  3.7854051e-04,
0.0000000e+00,  3.7822182e-04,  0.0000000e+00,  -6.0860488e-04,  0.0000000e+00,
1.9141738e-06,  0.0000000e+00,  -4.5896401e-07,  0.0000000e+00,  3.7197036e-07 },
{  3.5431225e-07,  0.0000000e+00,  -4.6086255e-07,  0.0000000e+00,  1.1840786e-06,
0.0000000e+00,  -5.9436815e-04,  0.0000000e+00,  3.8840594e-04,  0.0000000e+00,
3.7925529e-04,  0.0000000e+00,  9.9999727e-01,  0.0000000e+00,  3.7925529e-04,
0.0000000e+00,  3.8840594e-04,  0.0000000e+00,  -5.9436815e-04,  0.0000000e+00,
1.1840786e-06,  0.0000000e+00,  -4.6086255e-07,  0.0000000e+00,  3.5431225e-07 },
```

© ISO/IEC 2008 – All rights reserved

Copyright International Organization for Standardization
Provided by IHS under license with ISO
No reproduction or networking permitted without license from IHS
Not for Resale

```
{  3.3473225e-07,  0.0000000e+00,  -4.2760192e-07,  0.0000000e+00,  2.9030487e-07,
0.0000000e+00,  -5.7827802e-04,  0.0000000e+00,  3.6988876e-04,  0.0000000e+00,
3.8353349e-04,  0.0000000e+00,  1.0000049e+00,  0.0000000e+00,  3.8353349e-04,
0.0000000e+00,  3.6988876e-04,  0.0000000e+00,  -5.7827802e-04,  0.0000000e+00,
2.9030487e-07,  0.0000000e+00,  -4.2760192e-07,  0.0000000e+00,  3.3473225e-07 },
{  3.1619118e-07,  0.0000000e+00,  -4.3132034e-07,  0.0000000e+00,  -5.2733039e-07,
0.0000000e+00,  -5.6257657e-04,  0.0000000e+00,  3.8295297e-04,  0.0000000e+00,
3.6733911e-04,  0.0000000e+00,  9.9999517e-01,  0.0000000e+00,  3.6733911e-04,
0.0000000e+00,  3.8295297e-04,  0.0000000e+00,  -5.6257657e-04,
0.0000000e+00,  -5.2733039e-07,  0.0000000e+00,  -4.3132034e-07,  0.0000000e+00,
3.1619118e-07 },
{  2.9602788e-07,  0.0000000e+00,  -4.2291064e-07,  0.0000000e+00,  -1.3532960e-06,
0.0000000e+00,  -5.4495744e-04,  0.0000000e+00,  3.8704406e-04,  0.0000000e+00,
3.7601779e-04,  0.0000000e+00,  1.0000058e+00,  0.0000000e+00,  3.7601779e-04,
0.0000000e+00,  3.8704406e-04,  0.0000000e+00,  -5.4495744e-04,
0.0000000e+00,  -1.3532960e-06,  0.0000000e+00,  -4.2291064e-07,  0.0000000e+00,
2.9602788e-07 },
{  2.7884610e-07,  0.0000000e+00,  -4.0799614e-07,  0.0000000e+00,  -2.2609589e-06,
0.0000000e+00,  -5.2960881e-04,  0.0000000e+00,  3.8353187e-04,  0.0000000e+00,
3.7634198e-04,  0.0000000e+00,  9.9999409e-01,  0.0000000e+00,  3.7634198e-04,
0.0000000e+00,  3.8353187e-04,  0.0000000e+00,  -5.2960881e-04,
0.0000000e+00,  -2.2609589e-06,  0.0000000e+00,  -4.0799614e-07,  0.0000000e+00,
2.7884610e-07 },
{  2.5911752e-07,  0.0000000e+00,  -3.9510017e-07,  0.0000000e+00,  -3.1209281e-06,
0.0000000e+00,  -5.1130084e-04,  0.0000000e+00,  3.8404997e-04,  0.0000000e+00,
3.7099966e-04,  0.0000000e+00,  9.9999511e-01,  0.0000000e+00,  3.7099966e-04,
0.0000000e+00,  3.8404997e-04,  0.0000000e+00,  -5.1130084e-04,
0.0000000e+00,  -3.1209281e-06,  0.0000000e+00,  -3.9510017e-07,  0.0000000e+00,
2.5911752e-07 },
{  2.4214140e-07,  0.0000000e+00,  -3.7828056e-07,  0.0000000e+00,  -3.9947736e-06,
0.0000000e+00,  -4.9507069e-04,  0.0000000e+00,  3.7903876e-04,  0.0000000e+00,
3.6711132e-04,  0.0000000e+00,  1.0000145e+00,  0.0000000e+00,  3.6711132e-04,
0.0000000e+00,  3.7903876e-04,  0.0000000e+00,  -4.9507069e-04,
0.0000000e+00,  -3.9947736e-06,  0.0000000e+00,  -3.7828056e-07,  0.0000000e+00,
2.4214140e-07 },
{  2.2409953e-07,  0.0000000e+00,  -3.6155050e-07,  0.0000000e+00,  -4.8704421e-06,
0.0000000e+00,  -4.7715346e-04,  0.0000000e+00,  3.7500804e-04,  0.0000000e+00,
3.7232514e-04,  0.0000000e+00,  9.9998879e-01,  0.0000000e+00,  3.7232514e-04,
0.0000000e+00,  3.7500804e-04,  0.0000000e+00,  -4.7715346e-04,
0.0000000e+00,  -4.8704421e-06,  0.0000000e+00,  -3.6155050e-07,  0.0000000e+00,
2.2409953e-07 },
{  2.0687658e-07,  0.0000000e+00,  -3.5116608e-07,  0.0000000e+00,  -5.6529042e-06,
0.0000000e+00,  -4.5943578e-04,  0.0000000e+00,  3.7761421e-04,  0.0000000e+00,
3.6593984e-04,  0.0000000e+00,  1.0000094e+00,  0.0000000e+00,  3.6593984e-04,
0.0000000e+00,  3.7761421e-04,  0.0000000e+00,  -4.5943578e-04,
0.0000000e+00,  -5.6529042e-06,  0.0000000e+00,  -3.5116608e-07,  0.0000000e+00,
2.0687658e-07 },
{  1.9190022e-07,  0.0000000e+00,  -3.3997140e-07,  0.0000000e+00,  -6.4636648e-06,
0.0000000e+00,  -4.4353455e-04,  0.0000000e+00,  3.7785451e-04,  0.0000000e+00,
3.6609041e-04,  0.0000000e+00,  9.9999733e-01,  0.0000000e+00,  3.6609041e-04,
0.0000000e+00,  3.7785451e-04,  0.0000000e+00,  -4.4353455e-04,
0.0000000e+00,  -6.4636648e-06,  0.0000000e+00,  -3.3997140e-07,  0.0000000e+00,
1.9190022e-07 },
{  1.7700776e-07,  0.0000000e+00,  -3.1917655e-07,  0.0000000e+00,  -7.2525066e-06,
0.0000000e+00,  -4.2693986e-04,  0.0000000e+00,  3.6739108e-04,  0.0000000e+00,
3.7398884e-04,  0.0000000e+00,  1.0000029e+00,  0.0000000e+00,  3.7398884e-04,
0.0000000e+00,  3.6739108e-04,  0.0000000e+00,  -4.2693986e-04,
0.0000000e+00,  -7.2525066e-06,  0.0000000e+00,  -3.1917655e-07,  0.0000000e+00,
1.7700776e-07 },
{  1.6478236e-07,  0.0000000e+00,  -3.0432202e-07,  0.0000000e+00,  -7.9865548e-06,
0.0000000e+00,  -4.1291769e-04,  0.0000000e+00,  3.6138244e-04,  0.0000000e+00,
3.6524549e-04,  0.0000000e+00,  9.9999787e-01,  0.0000000e+00,  3.6524549e-04,
0.0000000e+00,  3.6138244e-04,  0.0000000e+00,  -4.1291769e-04,
0.0000000e+00,  -7.9865548e-06,  0.0000000e+00,  -3.0432202e-07,  0.0000000e+00,
1.6478236e-07 },
```


© ISO/IEC 2008 – All rights reserved
Copyright International Organization for Standardization
Provided by IHS under license with ISO
No reproduction or networking permitted without license from IHS
Not for Resale

```
{  1.5225622e-07,  0.0000000e+00,  -2.9847658e-07,  0.0000000e+00,  -8.6322461e-06,
0.0000000e+00,  -3.9817229e-04,  0.0000000e+00,  3.6682773e-04,  0.0000000e+00,
3.6520318e-04,  0.0000000e+00,  1.0000023e+00,  0.0000000e+00,  3.6520318e-04,
0.0000000e+00,  3.6682773e-04,  0.0000000e+00,  -3.9817229e-04,
0.0000000e+00,  -8.6322461e-06,  0.0000000e+00,  -2.9847658e-07,  0.0000000e+00,
1.5225622e-07 },
{  1.4163726e-07,  0.0000000e+00,  -2.7824870e-07,  0.0000000e+00,  -9.2977181e-06,
0.0000000e+00,  -3.8490239e-04,  0.0000000e+00,  3.5260588e-04,  0.0000000e+00,
3.6420460e-04,  0.0000000e+00,  1.0000110e+00,  0.0000000e+00,  3.6420460e-04,
0.0000000e+00,  3.5260588e-04,  0.0000000e+00,  -3.8490239e-04,
0.0000000e+00,  -9.2977181e-06,  0.0000000e+00,  -2.7824870e-07,  0.0000000e+00,
1.4163726e-07 },
{  1.3263993e-07,  0.0000000e+00,  -2.7003524e-07,  0.0000000e+00,  -9.8822524e-06,
0.0000000e+00,  -3.7356560e-04,  0.0000000e+00,  3.5176466e-04,  0.0000000e+00,
3.6332857e-04,  0.0000000e+00,  1.0000102e+00,  0.0000000e+00,  3.6332857e-04,
0.0000000e+00,  3.5176466e-04,  0.0000000e+00,  -3.7356560e-04,
0.0000000e+00,  -9.8822524e-06,  0.0000000e+00,  -2.7003524e-07,  0.0000000e+00,
1.3263993e-07 },
{  1.2588236e-07,  0.0000000e+00,  -2.6200461e-07,  0.0000000e+00,  -1.0461199e-05,
0.0000000e+00,  -3.6487563e-04,  0.0000000e+00,  3.4857949e-04,  0.0000000e+00,
3.6248811e-04,  0.0000000e+00,  9.9999030e-01,  0.0000000e+00,  3.6248811e-04,
0.0000000e+00,  3.4857949e-04,  0.0000000e+00,  -3.6487563e-04,
0.0000000e+00,  -1.0461199e-05,  0.0000000e+00,  -2.6200461e-07,  0.0000000e+00,
1.2588236e-07 },
{  1.2249635e-07,  0.0000000e+00,  -2.6464047e-07,  0.0000000e+00,  -1.1081786e-05,
0.0000000e+00,  -3.6102224e-04,  0.0000000e+00,  3.5541117e-04,  0.0000000e+00,
3.5963495e-04,  0.0000000e+00,  1.0000056e+00,  0.0000000e+00,  3.5963495e-04,
0.0000000e+00,  3.5541117e-04,  0.0000000e+00,  -3.6102224e-04,
0.0000000e+00,  -1.1081786e-05,  0.0000000e+00,  -2.6464047e-07,  0.0000000e+00,
1.2249635e-07 },
{  1.2357771e-07,  0.0000000e+00,  -2.6251894e-07,  0.0000000e+00,  -1.1825179e-05,
0.0000000e+00,  -3.6305811e-04,  0.0000000e+00,  3.4969594e-04,  0.0000000e+00,
3.6185021e-04,  0.0000000e+00,  1.0000091e+00,  0.0000000e+00,  3.6185021e-04,
0.0000000e+00,  3.4969594e-04,  0.0000000e+00,  -3.6305811e-04,
0.0000000e+00,  -1.1825179e-05,  0.0000000e+00,  -2.6251894e-07,  0.0000000e+00,
1.2357771e-07 },
{  1.3964719e-07,  0.0000000e+00,  -2.9742459e-07,  0.0000000e+00,  -1.3181384e-05,
0.0000000e+00,  -3.8654437e-04,  0.0000000e+00,  3.7214108e-04,  0.0000000e+00,
3.6667915e-04,  0.0000000e+00,  9.9999586e-01,  0.0000000e+00,  3.6667915e-04,
0.0000000e+00,  3.7214108e-04,  0.0000000e+00,  -3.8654437e-04,
0.0000000e+00,  -1.3181384e-05,  0.0000000e+00,  -2.9742459e-07,  0.0000000e+00,
1.3964719e-07 },
{  1.3994244e-07,  0.0000000e+00,  -2.9058151e-07,  0.0000000e+00,  -1.3757007e-05,
0.0000000e+00,  -3.8711165e-04,  0.0000000e+00,  3.6186281e-04,  0.0000000e+00,
3.7702263e-04,  0.0000000e+00,  1.0000049e+00,  0.0000000e+00,  3.7702263e-04,
0.0000000e+00,  3.6186281e-04,  0.0000000e+00,  -3.8711165e-04,
0.0000000e+00,  -1.3757007e-05,  0.0000000e+00,  -2.9058151e-07,  0.0000000e+00,
1.3994244e-07 },
{  3.4766980e-08,  0.0000000e+00,  -6.7631578e-08,  0.0000000e+00,  -6.9749736e-06,
0.0000000e+00,  -1.9242196e-04,  0.0000000e+00,  1.6298227e-04,  0.0000000e+00,
3.5405288e-04,  0.0000000e+00,  9.9999403e-01,  0.0000000e+00,  3.5405288e-04,
0.0000000e+00,  1.6298227e-04,  0.0000000e+00,  -1.9242196e-04,
0.0000000e+00,  -6.9749736e-06,  0.0000000e+00,  -6.7631578e-08,  0.0000000e+00,
3.4766980e-08 }
}
```

The test sequences specified in Table AMD1.5 ff have to be applied. The testing shall be done using the test procedure defined above. The conformance of the underlying downmix decoder shall be tested before conformance testing is done for the MPEG Surround decoder. The MPEG Surround decoder is based on a pseudo QMF filterbank. This is the most critical part of the MPEG Surround Tool in terms of precision. Hence, in order to simplify conformance testing, it is recommended to first check the accuracy of the QMF implementation.

--`,,```,,,,````-`-`,,`,,`,`,,`---
© ISO/IEC 2008 – All rights reserved

Copyright International Organization for Standardization
Provided by IHS under license with ISO
No reproduction or networking permitted without license from IHS
Not for Resale

8.5.3 Test sequences

To test MPEG Surround decoders, ISO/IEC JTC 1/SC 29/WG 11 supplies a number of test sequences. The naming convention of these bitstreams is as follows: The first part of the name (the part preceding the first underscore) specifies the downmix coder that was used for the respective test sequences according to Table AMD1.3. The second part of the name (between the first and the last underscore) specifies the properties of the test sequence in question according to Table AMD1.4. The test sequences are defined in Table AMD1.5 ff.

Table AMD1.3 — Mapping between file prefix and downmix codec

File prefix	Downmix coder
aac	MPEG-4 AAC
heaac	MPEG-4 High Efficiency AAC
l2	MPEG-1 Layer II
l3	MPEG-1 Layer III
pcm	PCM

Table AMD1.4 — Mapping between second part of file name and bitstream properties

File basename	Bitstream properties
qmf	Tests the QMF implementation
tree	Tests various tree configurations
arbtree	Tests arbitrary tree configuration
quant	Tests various quantization modes
smooth	Tests parameter smoothing
shape	Tests temporal shaping tools
param	Tests various numbers of parameter bands
_ts_	Tests various numbers of time slots
oneicc	Tests single ICC
mtx	Tests integrated matrixing
res	Tests residual coding
arbdmx	Tests arbitrary downmix
arbdmxres	Tests arbitrary downmix residual

© ISO/IEC 2008 – All rights reserved
Copyright International Organization for Standardization
Provided by IHS under license with ISO
No reproduction or networking permitted without license from IHS
Not for Resale

Table AMD1.5 — List of MPEG Surround conformance test sequences with MPEG-4 AAC profile downmix

Sequence		aac_mps_oneicc	aac_mps_param_4	aac_mps_param_5	aac_mps_param_7	aac_mps_param_10	aac_mps_param_14	aac_mps_param_20	aac_mps_param_28	aac_mps_qmf	aac_mps_quant_0
downmix coder	AOT	2	2	2	2	2	2	2	2	2	2
	extAOT	--	--	--	--	--	--	--	--	--	--
	backwards compatible	--	--	--	--	--	--	--	--	--	--
	SBR present	--	--	--	--	--	--	--	--	--	--
	SSC Embedding	--	--	--	--	--	--	--	--	--	--
	number of channels	2	2	2	2	2	2	2	2	1	2
	sampling frequency	48000	48000	48000	48000	48000	48000	48000	48000	48000	48000
	frame length	1024	1024	1024	1024	1024	1024	1024	1024	1024	1024
time slots / frame		16	16	16	16	16	16	16	16	16	16
parameter bands		28	4	5	7	10	14	20	28	28	28
tree configuration		2	2	2	2	2	2	2	2	2	2
quantization mode		0	0	0	0	0	0	0	0	0	0
one ICC		1	0	0	0	0	0	0	0	0	0
arbitrary downmix		0	0	0	0	0	0	0	0	0	0
arbitrary tree		0	0	0	0	0	0	0	0	0	0
surround gain		2	2	2	2	2	2	2	2	2	2
LFE gain		1	1	1	1	1	1	1	1	1	1
downmix gain		4	4	4	4	4	4	4	4	4	4
matrix comp. mode		0	0	0	0	0	0	0	0	0	0

© ISO/IEC 2008 – All rights reserved
Copyright International Organization for Standardization
Provided by IHS under license with ISO
No reproduction or networking permitted without license from IHS
Not for Resale

temp shape config	0	0	0	0	0	0	0	0	0	0
decorr config	0	0	0	0	0	0	0	0	0	0
energy based qu.	0	0	0	0	0	0	0	0	0	0
3D stereo	0	0	0	0	0	0	0	0	0	0
number of LFE bands	2	1	1	1	1	2	2	2	2	2
residual coding	0	0	0	0	0	0	0	0	0	0
arbitrary downmix residual	0	0	0	0	0	0	0	0	0	0
residual sampling rate	--	--	--	--	--	--	--	--	--	--
number of residual frames	--	--	--	--	--	--	--	--	--	--
number of residual bands	--	--	--	--	--	--	--	--	--	--
TttModeLow	1	1	1	1	1	1	1	1	1	1
TttLow start band	0	0	0	0	0	0	0	0	0	0
TttLow stop band	28	4	5	7	10	14	20	28	28	28
TttModeHigh	0	0	0	0	0	0	0	0	0	0
TttHigh start band	--	--	--	--	--	--	--	--	--	--
TttHigh stop band	--	--	--	--	--	--	--	--	--	--

Table AMD1.6 — List of MPEG Surround conformance test sequences with MPEG-4 AAC profile downmix (ctd.)

Sequence		**aac_mps_quant_1**	**aac_mps_quant_2**	**aac_mps_quant_3**	**aac_mps_res**	**aac_mps_shape_ges**	**aac_mps_shape_stp**	**aac_mps_smooth**	**aac_mps_tree_5151**	**aac_mps_tree_5152**	**aac_mps_tree_525**
downmix coder	**AOT**	2	2	2	2	2	2	2	2	2	2
	extAOT	--	--	--	--	--	--	--	--	--	--
	backwards compatible	--	--	--	--	--	--	--	--	--	--
	SBR present	--	--	--	--	--	--	--	--	--	--

© ISO/IEC 2008 – All rights reserved
Copyright International Organization for Standardization
Provided by IHS under license with ISO
No reproduction or networking permitted without license from IHS
Not for Resale

	SSC Embedding	--	--	--	--	--	--	--	--	--	--
	number of channels	2	2	2	2	2	2	1	1	2	2
	sampling frequency	48000	48000	48000	48000	48000	48000	48000	48000	48000	48000
	frame length	1024	1024	1024	1024	1024	1024	1024	1024	1024	1024
time slots / frame		16	16	16	16	16	16	16	16	16	16
parameter bands		28	28	28	28	28	28	28	28	28	28
tree configuration		2	0	0	2	2	2	2	0	1	2
quantization mode		1	2	3	0	0	0	0	0	0	0
one ICC		0	0	0	0	0	0	0	0	0	0
arbitrary downmix		0	0	0	0	0	0	0	0	0	0
arbitrary tree		0	0	0	0	0	0	0	0	0	0
surround gain		2	2	2	2	2	2	2	2	2	2
LFE gain		1	1	1	1	1	1	1	1	1	1
downmix gain		4	4	4	4	4	4	4	4	4	4
matrix comp. mode		0	0	0	0	0	1	0	0	0	0
temp shape config		0	0	0	0	2	1	0	0	0	0
decorr config		0	0	0	0	0	0	0	0	2	0
energy based qu.		0	0	0	0	0	0	0	0	0	0
3D stereo		0	0	0	0	0	0	0	0	0	0
number of LFE bands		2	2	2	2	2	2	2	2	2	2
residual coding		0	0	0	1	0	0	0	0	0	0
arbitrary downmix residual		0	0	0	0	0	0	0	0	0	0
residual sampling rate		--	--	--	48000	--	--	--	--	--	--
number of residual frames		--	--	--	1	--	--	--	--	--	--

--`,,```,,,,````-`-`,,`,,`,`,,`---

© ISO/IEC 2008 – All rights reserved
Copyright International Organization for Standardization
Provided by IHS under license with ISO
No reproduction or networking permitted without license from IHS
Not for Resale

number of residual bands	--	--	--	7,7,7,7	--	--	--	--	--	--
TttModeLow	1	--	--	1	1	1	1	--	--	1
TttLow start band	0	--	--	0	0	0	0	--	--	0
TttLow stop band	28	--	--	28	28	28	28	--	--	28
TttModeHigh	0	--	--	0	0	0	0	--	--	0
TttHigh start band	--	--	--	--	--	--	--	--	--	--
TttHigh stop band	--	--	--	--	--	--	--	--	--	--

Table AMD1.7 — List of MPEG Surround conformance test sequences with MPEG-4 High Efficiency AAC profile downmix

Sequence		**heaac_mps_oneicc**	**heaac_mps_param_4**	**heaac_mps_param_5**	**heaac_mps_param_7**	**heaac_mps_param_10**	**heaac_mps_param_14**	**heaac_mps_param_20**	**heaac_mps_param_28**	**heaac_mps_qmf**	**heaac_mps_quant_0**
downmix coder	**AOT**	2	2	2	2	2	2	2	2	2	2
	extAOT	5	5	5	5	5	5	5	5	5	5
	backwards compatible	--	--	--	--	--	--	--	--	--	--
	SBR present	1	1	1	1	1	1	1	1	1	1
	SSC Embedding	--	--	--	--	--	--	--	--	--	--
	number of channels	2	2	2	2	2	2	2	2	1	2
	sampling frequency	48000	48000	48000	48000	48000	48000	48000	48000	48000	48000
	frame length	2048	2048	2048	2048	2048	2048	2048	2048	2048	2048
time slots / frame		32	32	32	32	32	32	32	32	32	32
parameter bands		28	4	5	7	10	14	20	28	28	20
tree configuration		2	2	2	2	2	2	2	2	2	2

© ISO/IEC 2008 – All rights reserved
Copyright International Organization for Standardization
Provided by IHS under license with ISO
No reproduction or networking permitted without license from IHS
Not for Resale

quantization mode	0	0	0	0	0	0	0	0	0	0
one ICC	1	0	0	0	0	0	0	0	0	0
arbitrary downmix	0	0	0	0	0	0	0	0	0	0
arbitrary tree	0	0	0	0	0	0	0	0	0	0
surround gain	2	2	2	2	2	2	2	2	2	2
LFE gain	1	1	1	1	1	1	1	1	1	1
downmix gain	4	4	4	4	4	4	4	4	4	4
matrix comp. mode	0	0	0	0	0	0	0	0	0	0
temp shape config	0	0	0	0	0	0	0	0	0	0
decorr config	0	0	0	0	0	0	0	0	0	0
energy based qu.	0	0	0	0	0	0	0	0	0	0
3D stereo	0	0	0	0	0	0	0	0	0	0
number of LFE bands	2	1	1	1	1	2	2	2	2	2
residual coding	0	0	0	0	0	0	0	0	0	0
arbitrary downmix residual	0	0	0	0	0	0	0	0	0	0
residual sampling rate	--	--	--	--	--	--	--	--	--	--
number of residual frames	--	--	--	--	--	--	--	--	--	--
number of residual bands	--	--	--	--	--	--	--	--	--	--
TttModeLow	1	1	1	1	1	1	1	1	1	1
TttLow start band	0	0	0	0	0	0	0	0	0	0
TttLow stop band	28	4	5	7	10	13	19	22	28	19
TttModeHigh	0	0	0	0	0	5	5	5	0	5
TttHigh start band	--	--	--	--	--	13	19	22	--	19
TttHigh stop band	--	--	--	--	--	14	20	28	--	20

© ISO/IEC 2008 – All rights reserved
Copyright International Organization for Standardization
Provided by IHS under license with ISO
No reproduction or networking permitted without license from IHS
Not for Resale

Table AMD1.8 — List of MPEG Surround conformance test sequences with MPEG-4 High Efficiency AAC profile downmix (ctd.)

Sequence		heaac_mps_quant_1	heaac_mps_quant_2	heaac_mps_quant_3	heaac_mps_res	heaac_mps_shape_ges	heaac_mps_shape_stp	heaac_mps_smooth	heaac_mps_tree_5151	heaac_mps_tree_5152	heaac_mps_tree_525
downmix coder	AOT	2	2	2	2	2	2	2	2	2	2
	extAOT	5	5	5	5	5	5	5	5	5	5
	backwards compatible	--	--	--	--	--	--	--	--	--	--
	SBR present	1	1	1	1	1	1	1	1	1	1
	SSC Embedding	--	--	--	--	--	--	--	--	--	--
	number of channels	2	2	2	2	2	2	2	1	2	1
	sampling frequency	48000	48000	48000	48000	48000	48000	48000	48000	48000	48000
	frame length	2048	2048	2048	2048	2048	2048	2048	2048	2048	2048
time slots / frame		32	32	32	32	32	32	32	32	32	32
parameter bands		20	20	20	28	20	20	20	20	20	20
tree configuration		2	0	0	2	2	2	2	0	1	2
quantization mode		1	2	3	0	0	0	0	0	0	0
one ICC		0	0	0	0	0	0	0	0	0	0
arbitrary downmix		0	0	0	0	0	0	0	0	0	0
arbitrary tree		0	0	0	0	0	0	0	0	0	0
surround gain		2	2	2	2	2	2	2	2	2	2
LFE gain		1	1	1	1	1	1	1	1	1	1
downmix gain		4	4	4	4	4	4	4	4	4	4
matrix comp. mode		0	0	0	0	0	1	0	0	0	0

--`,,```,,,,````-`-`,,`,,`,`,,`---
Copyright International Organization for Standardization
Provided by IHS under license with ISO
No reproduction or networking permitted without license from IHS
Not for Resale
© ISO/IEC 2008 – All rights reserved

temp shape config	0	0	0	0	2	1	0	0	0	0	0
decorr config	0	0	0	0	0	0	0	0	0	2	0
energy based qu.	0	0	0	0	0	0	0	0	0	0	0
3D stereo	0	0	0	0	0	0	0	0	0	0	0
number of LFE bands	2	2	2	2	2	2	2	2	2	2	2
residual coding	0	0	0	0	0	0	0	0	0	0	0
arbitrary downmix residual	0	0	0	0	0	0	0	0	0	0	0
residual sampling rate	--	--	--	24000	--	--	--	--	--	--	--
number of residual frames	--	--	--	1	--	--	--	--	--	--	--
number of residual bands	--	--	--	7,7,7,7	--	--	--	--	--	--	--
TttModeLow	1	--	--	1	1	1	1	--	--	1	
TttLow start band	0	--	--	0	0	0	0	--	--	0	
TttLow stop band	19	--	--	22	19	19	19	--	--	19	
TttModeHigh	5	--	--	5	5	5	5	--	--	5	
TttHigh start band	19	--	--	22	19	19	19	--	--	19	
TttHigh stop band	20	--	--	28	20	20	20	--	--	20	

Table AMD1.9 — List of MPEG Surround conformance test sequences with MPEG-1 Layer II downmix

Sequence		**l2_mps_arbdmx**	**l2_mps_arbdmxres**	**l2_mps_mtx**	**l2_mps_oneicc**	**l2_mps_param_4**	**l2_mps_param_5**	**l2_mps_param_7**	**l2_mps_param_10**	**l2_mps_param_14**	**l2_mps_param_20**	**l2_mps_param_28**	**l2_mps_qmf**	**l2_mps_quant_0**	**l2_mps_quant_1**
core coder	**ancCrcLen**	0	0	0	0	0	0	0	0	0	0	0	0	0	0
	number of channels	2	2	2	2	2	2	2	2	2	2	2	2	2	1

© ISO/IEC 2008 All rights reserved
Copyright International Organization for Standardization
Provided by IHS under license with ISO
No reproduction or networking permitted without license from IHS
Not for Resale

	sampling frequency	48000	48000	48000	48000	48000	48000	48000	48000	48000	48000	48000	48000	48000	48000	48000
	frame length	1152	1152	1152	1152	1152	1152	1152	1152	1152	1152	1152	1152	1152	1152	1152
time slots / frame		18	18	18	18	18	18	18	18	18	18	18	18	18	18	18
parameter bands		28	28	28	28	4	5	7	10	14	20	28	28	28	28	28
tree configuration		2	2	2	2	2	2	2	2	2	2	2	2	2	2	0
quantization mode		0	0	0	0	0	0	0	0	0	0	0	0	0	0	1
one ICC		0	0	0	1	0	0	0	0	0	0	0	0	0	0	0
arbitrary downmix		1	1	0	0	0	0	0	0	0	0	0	0	0	0	0
arbitrary tree		0	0	0	0	0	0	0	0	0	0	0	0	0	0	0
surround gain		2	2	2	2	2	2	2	2	2	2	2	2	2	2	2
LFE gain		1	1	1	1	1	1	1	1	1	1	1	1	1	1	1
downmix gain		0	0	0	0	0	0	0	0	0	0	0	0	0	0	0
matrix comp. mode		0	0	1	0	0	0	0	0	0	0	0	0	0	0	0
temp shape config		0	0	0	0	0	0	0	0	0	0	0	0	0	0	0
decorr config		0	0	0	0	0	0	0	0	0	0	0	0	0	0	0
energy based qu.		0	0	0	0	0	0	0	0	0	0	0	0	0	0	0
3D stereo		0	0	0	0	0	0	0	0	0	0	0	0	0	0	0
number of LFE bands		2	2	2	2	1	1	1	1	1	2	2	2	2	2	2
residual coding		0	0	0	0	0	0	0	0	0	0	0	0	0	0	0
arbitrary downmix residual		0	1	0	0	0	0	0	0	0	0	0	0	0	0	0
residual sampling rate		--	32000	--	--	--	--	--	--	--	--	--	--	--	--	--
number of residual frames		--	1	--	--	--	--	--	--	--	--	--	--	--	--	--
number of residual bands		--	12	--	--	--	--	--	--	--	--	--	--	--	--	--
TttModeLow		1	1	1	1	1	1	1	1	1	1	1	1	1	1	--
TttLow start band		0	0	0	0	0	0	0	0	0	0	0	0	0	0	--

Copyright International Organization for Standardization
Provided by IHS under license with ISO
No reproduction or networking permitted without license from IHS
Not for Resale
© ISO/IEC 2008 – All rights reserved

TttLow stop band	28	28	28	28	4	5	7	10	14	20	28	28	28	--
TttModeHigh	0	0	0	0	0	0	0	0	0	0	0	0	0	--
TttHigh start band	--	--	--	--	--	--	--	--	--	--	--	--	--	--
TttHigh stop band	--	--	--	--	--	--	--	--	--	--	--	--	--	--
bsSmoothMode	0	0	0	0	0	0	0	0	0	0	0	0	0	0
bsQuantCoarseXXX	0	0	0	0	0	0	0	0	0	0	0	0	0,1	0

Table AMD1.10 — List of MPEG Surround conformance test sequences with MPEG-1 Layer II downmix (ctd.)

Sequence		**l2_mps_quant_2**	**l2_mps_res**	**l2_mps_shape_ges**	**l2_mps_shape_stp**	**l2_mps_smooth**	**l2_mps_tree_5151**	**l2_mps_tree_5152**	**l2_mps_tree_7271**	**l2_mps_tree_7272**	**l2_mps_ts_36**	**l2_mps_32khz**	**l2_mps_44khz**
core coder	**ancCrcLen**	0	0	0	0	0	0	0	0	0	1	0	0
	number of channels	1	2	2	2	2	1	1	2	2	2	2	2
	sampling frequency	48000	48000	48000	48000	48000	48000	48000	48000	48000	48000	32000	44100
	frame length	1152	1152	1152	1152	1152	1152	1152	1152	1152	1152	1152	1152
time slots / frame		18	18	18	18	18	18	18	18	18	36	18	18
parameter bands		28	28	28	28	28	28	28	28	28	28	28	28
tree configuration		0	2	2	2	2	0	1	3	4	2	2	2
quantization mode		2	0	0	0	0	0	0	0	0	0	0	0
one ICC		0	0	0	0	0	0	0	0	0	0	0	0
arbitrary downmix		0	0	0	0	0	0	0	0	0	0	0	0
arbitrary tree		0	0	0	0	0	0	0	0	0	0	0	0
surround gain		2	2	2	2	2	2	2	2	2	2	2	2
LFE gain		1	1	1	1	1	1	1	1	1	1	1	1

© ISO/IEC 2008 – All rights reserved
Copyright International Organization for Standardization
Provided by IHS under license with ISO
No reproduction or networking permitted without license from IHS
Not for Resale

downmix gain	0	0	0	0	0	0	0	0	0	0	0	0
matrix comp. mode	0	0	0	1	0	0	0	0	0	0	0	0
temp shape config	0	0	2	1	0	0	0	0	0	0	0	0
decorr config	0	0	0	0	0	0	2	0	0	0	0	0
energy based qu.	0	0	0	0	0	0	0	0	0	0	0	0
3D stereo	0	0	0	0	0	0	0	0	0	0	0	0
number of LFE bands	2	2	2	2	2	2	2	2	2	2	2	2
residual coding	0	0	0	0	0	0	0	0	0	0	0	0
arbitrary downmix residual	0	0	0	0	0	0	0	0	0	0	0	0
residual sampling rate	--	32000	--	--	--	--	--	--	--	--	--	--
number of residual frames	--	1	--	--	--	--	--	--	--	--	--	--
number of residual bands	--	0,18,18,19	--	--	--	--	--	--	--	--	--	--
TttModeLow	--	1	1	1	1	--	--	1	1	1	1	1
TttLow start band	--	0	0	0	0	--	--	0	0	0	0	0
TttLow stop band	--	28	28	28	28	--	--	28	28	28	28	28
TttModeHigh	--	0	0	0	0	--	--	0	0	0	0	0
TttHigh start band	--	--	--	--	--	--	--	--	--	--	--	--
TttHigh stop band	--	--	--	--	--	--	--	--	--	--	--	--
bsSmoothMode	0	0	0	0	0 ... 3	0	0	0	0	0	0	0
bsQuantCoarseXXX	0	0	0	0	0	0	0	0	0	0	0	0

© ISO/IEC 2008 – All rights reserved
Copyright International Organization for Standardization
Provided by IHS under license with ISO
No reproduction or networking permitted without license from IHS
Not for Resale

Table AMD1.11 — List of MPEG Surround conformance test sequences with MPEG-1 Layer III downmix

Sequence		l3_mps_arbdmx	l3_mps_arbdmxres	l3_mps_mtx	l3_mps_oneicc	l3_mps_param_4	l3_mps_param_5	l3_mps_param_7	l3_mps_param_10	l3_mps_param_14	l3_mps_param_20	l3_mps_param_28	l3_mps_qmf	l3_mps_quant_0	l3_mps_quant_1
core coder	ancCrcLen	0	0	0	0	0	0	0	0	0	0	0	0	0	0
	number of channels	2	2	2	2	2	2	2	2	2	2	2	2	2	1
	sampling frequency	48000	48000	48000	48000	48000	48000	48000	48000	48000	48000	48000	48000	48000	48000
	frame length	1152	1152	1152	1152	1152	1152	1152	1152	1152	1152	1152	1152	1152	1152
time slots / frame		18	18	18	18	18	18	18	18	18	18	18	18	18	18
parameter bands		28	28	28	28	4	5	7	10	14	20	28	28	28	28
tree configuration		2	2	2	2	2	2	2	2	2	2	2	2	2	0
quantization mode		0	0	0	0	0	0	0	0	0	0	0	0	0	1
one ICC		0	0	0	1	0	0	0	0	0	0	0	0	0	0
arbitrary downmix		1	1	0	0	0	0	0	0	0	0	0	0	0	0
arbitrary tree		0	0	0	0	0	0	0	0	0	0	0	0	0	0
surround gain		2	2	2	2	2	2	2	2	2	2	2	2	2	2
LFE gain		1	1	1	1	1	1	1	1	1	1	1	1	1	2
downmix gain		0	0	0	0	0	0	0	0	0	0	0	0	0	0
matrix comp. mode		0	0	1	0	0	0	0	0	0	0	0	0	0	0
temp shape config		0	0	0	0	0	0	0	0	0	0	0	0	0	0
decorr config		0	0	0	0	0	0	0	0	0	0	0	0	0	0
energy based qu.		0	0	0	0	0	0	0	0	0	0	0	0	0	0
3D stereo		0	0	0	0	0	0	0	0	0	0	0	0	0	0
number of LFE bands		2	2	2	2	1	1	1	1	1	2	2	2	2	2
residual coding		0	0	0	0	0	0	0	0	0	0	0	0	0	0

© ISO/IEC 2008 – All rights reserved

Copyright International Organization for Standardization
Provided by IHS under license with ISO
No reproduction or networking permitted without license from IHS
Not for Resale

arbitrary downmix residual	0	1	0	0	0	0	0	0	0	0	0	0	0	0	0
residual sampling rate	--	32000	--	--	--	--	--	--	--	--	--	--	--	--	--
number of residual frames	--	1	--	--	--	--	--	--	--	--	--	--	--	--	--
number of residual bands	--	12	--	--	--	--	--	--	--	--	--	--	--	--	--
TttModeLow	1	1	1	1	1	1	1	1	1	1	1	1	1	1	--
TttLow start band	0	0	0	0	0	0	0	0	0	0	0	0	0	0	--
TttLow stop band	28	28	28	28	4	5	7	10	14	20	28	28	28	--	--
TttModeHigh	0	0	0	0	0	0	0	0	0	0	0	0	0	--	--
TttHigh start band	--	--	--	--	--	--	--	--	--	--	--	--	--	--	--
TttHigh stop band	--	--	--	--	--	--	--	--	--	--	--	--	--	--	--
bsSmoothMode	0	0	0	0	0	0	0	0	0	0	0	0	0	0	0
bsQuantCoarseXXX	0	0	0	0	0	0	0	0	0	0	0	0	0,1	0	0

Table AMD1.12 — List of MPEG Surround conformance test sequences with MPEG-1 Layer III downmix (ctd.)

Sequence		**l3_mps_quant_2**	**l3_mps_res**	**l3_mps_shape_ges**	**l3_mps_shape_stp**	**l3_mps_smooth**	**l3_mps_tree_5151**	**l3_mps_tree_5152**	**l3_mps_tree_7271**	**l3_mps_tree_7272**	**l3_mps_ts_36**	**l3_mps_32khz**	**l3_mps_44khz**
core coder	**ancCrcLen**	0	0	0	0	0	0	0	0	0	1	0	0
	number of channels	1	2	2	2	2	1	1	2	2	2	2	2
	sampling frequency	48000	48000	48000	48000	48000	48000	48000	48000	48000	48000	32000	44100
	frame length	1152	1152	1152	1152	1152	1152	1152	1152	1152	1152	1152	1152
time slots / frame		18	18	18	18	18	18	18	18	18	36	18	18

Copyright International Organization for Standardization
Provided by IHS under license with ISO
No reproduction or networking permitted without license from IHS
© ISO/IEC 2008 – All rights reserved
Not for Resale

parameter bands	28	28	28	28	28	28	28	28	28	28	28	28	28
tree configuration	0	2	2	2	2	0	1	3	4	2	2	2	
quantization mode	2	0	0	0	0	0	0	0	0	0	0	0	
one ICC	0	0	0	0	0	0	0	0	0	0	0	0	
arbitrary downmix	0	0	0	0	0	0	0	0	0	0	0	0	
arbitrary tree	0	0	0	0	0	0	0	0	0	0	0	0	
surround gain	2	2	2	2	2	2	2	2	2	2	2	2	
LFE gain	1	1	1	1	1	1	1	1	1	1	1	1	
downmix gain	0	0	0	0	0	0	0	0	0	0	0	0	
matrix comp. mode	0	0	0	1	0	0	0	0	0	0	0	0	
temp shape config	0	0	2	1	0	0	0	0	0	0	0	0	
decorr config	0	0	0	0	0	0	2	0	0	0	0	0	
energy based qu.	0	0	0	0	0	0	0	0	0	0	0	0	
3D stereo	0	0	0	0	0	0	0	0	0	0	0	0	
number of LFE bands	2	2	2	2	2	2	2	2	2	2	2	2	
residual coding	0	0	0	0	0	0	0	0	0	0	0	0	
arbitrary downmix residual	0	0	0	0	0	0	0	0	0	0	0	0	
residual sampling rate	--	32000	--	--	--	--	--	--	--	--	--	--	
number of residual frames	--	1	--	--	--	--	--	--	--	--	--	--	
number of residual bands	--	0,18,18,19	--	--	--	--	--	--	--	--	--	--	
TttModeLow	--	1	1	1	1	--	--	1	1	1	1	1	
TttLow start band	--	0	0	0	0	--	--	0	0	0	0	0	
TttLow stop band	--	28	28	28	28	--	--	28	28	28	28	28	
TttModeHigh	--	0	0	0	0	--	--	0	0	0	0	0	
TttHigh start band	--	--	--	--	--	--	--	--	--	--	--	--	

--`,,```,,,,````-`-`,,`,,`,`,,`---
© ISO/IEC 2008 All rights reserved
Copyright International Organization for Standardization
Provided by IHS under license with ISO
No reproduction or networking permitted without license from IHS
Not for Resale

TttHigh stop band	--	--	--	--	--	--	--	--	--	--	--	--
bsSmoothMode	0	0	0	0	0 ... 3	0	0	0	0	0	0	0
bsQuantCoarseXXX	0	0	0	0	0	0	0	0	0	0	0	0

Table AMD1.13 — List of MPEG Surround conformance test sequences with PCM downmix

Sequence		**pcm_mps_arbdmx**	**pcm_mps_arbdmxres**	**pcm_mps_mtx**	**pcm_mps_oneicc**	**pcm_mps_param_4**	**pcm_mps_param_5**	**pcm_mps_param_7**	**pcm_mps_param_10**	**pcm_mps_param_14**	**pcm_mps_param_20**	**pcm_mps_param_28**	**pcm_mps_qmf**	**pcm_mps_quant_0**	**pcm_mps_quant_1**	**pcm_mps_quant_2**	**pcm_mps_quant_3**
core coder	**sampling frequency**	48000	48000	48000	48000	48000	48000	48000	48000	48000	48000	48000	48000	48000	48000	48000	48000
	sample resolution	16	16	16	16	16	16	16	16	16	16	16	16	16	16	16	16
	bsBDChannels	1	1	1	1	1	1	1	1	1	1	1	1	1	1	0	0
	bsBDFrameLength	17	17	17	15	15	15	15	15	15	15	15	15	15	15	15	15
	bsBDSubframes	2	5	2	3	3	3	3	3	3	3	3	3	3	3	3	3
time slots / frame		18	18	18	16	16	16	16	16	16	16	16	16	16	16	16	16
parameter bands		28	28	28	28	4	5	7	10	14	20	28	28	28	28	28	28
tree configuration		2	2	2	2	2	2	2	2	2	2	2	2	2	2	0	0
quantization mode		0	0	0	0	0	0	0	0	0	0	0	0	0	1	2	2
one ICC		0	0	0	1	0	0	0	0	0	0	0	0	0	0	0	0
arbitrary downmix		1	1	0	0	0	0	0	0	0	0	0	0	0	0	0	0
arbitrary tree		0	0	0	0	0	0	0	0	0	0	0	0	0	0	0	0
surround gain		2	2	2	2	2	2	2	2	2	2	2	2	2	2	2	2
LFE gain		1	1	1	1	1	1	1	1	1	1	1	1	1	1	1	1

© ISO/IEC 2008 – All rights reserved
Copyright International Organization for Standardization
Provided by IHS under license with ISO
No reproduction or networking permitted without license from IHS
Not for Resale

downmix gain	0	0	4	4	4	4	4	4	4	4	4	4	4	4	4	4	4
matrix comp. mode	0	0	1	0	0	0	0	0	0	0	0	0	0	0	0	0	0
temp shape config	0	0	0	0	0	0	0	0	0	0	0	0	0	0	0	0	0
decorr config	0	0	0	0	0	0	0	0	0	0	0	0	0	0	0	0	0
energy based qu.	0	0	0	0	0	0	0	0	0	0	0	0	0	0	0	0	0
3D stereo	0	0	0	0	0	0	0	0	0	0	0	0	0	0	0	0	0
number of LFE bands	2	2	2	2	1	1	1	1	1	2	2	2	2	2	2	2	2
residual coding	0	0	0	0	0	0	0	0	0	0	0	0	0	0	0	0	0
arbitrary downmix residual	0	1	0	0	0	0	0	0	0	0	0	0	0	0	0	0	0
residual sampling rate	--	32000	--	--	--	--	--	--	--	--	--	--	--	--	--	--	--
number of residual frames	--	1	--	--	--	--	--	--	--	--	--	--	--	--	--	--	--
number of residual bands	--	12	--	--	--	--	--	--	--	--	--	--	--	--	--	--	--
TttModeLow	1	1	1	1	1	1	1	1	1	1	1	1	1	1	--	--	--
TttLow start band	0	0	0	0	0	0	0	0	0	0	0	0	0	--	--	--	--
TttLow stop band	28	28	28	28	4	5	7	10	14	20	28	28	28	--	--	--	--
TttModeHigh	0	0	0	0	0	0	0	0	0	0	0	0	0	--	--	--	--
TttHigh start band	--	--	--	--	--	--	--	--	--	--	--	--	--	--	--	--	--
TttHigh stop band	--	--	--	--	--	--	--	--	--	--	--	--	--	--	--	--	--
bsSmoothMode	0	0	0	0	0	0	0	0	0	0	0	0	0	0	0	0	0
bsQuantCoarseXXX	0	0	0	0	0	0	0	0	0	0	0	0	0,1	0	0	0	0

--`,,```,,,,````-`-`,,`,,`,`,,`---

© ISO/IEC 2008 – All rights reserved
Copyright International Organization for Standardization
Provided by IHS under license with ISO
No reproduction or networking permitted without license from IHS
Not for Resale

Table AMD1.14 — List of MPEG Surround conformance test sequences with PCM downmix (ctd.)

Sequence		pcm_mps_res	pcm_mps_shape_ges	pcm_mps_shape_stp	pcm_mps_smooth	pcm_mps_tree_5151	pcm_mps_tree_5152	pcm_mps_tree_525	pcm_mps_tree_7271	pcm_mps_tree_7272	pcm_mps_tree_7571	pcm_mps_tree_7572	pcm_mps_32khz	pcm_mps_44khz	pcm_mps_20bit	pcm_mps_24bit
core coder	sampling frequency	48000	48000	48000	48000	48000	48000	48000	48000	48000	48000	48000	32000	44100	48000	48000
	sample resolution	16	16	16	16	16	16	16	16	16	16	16	16	16	20	24
	bsBDChannels	0	1	1	1	0	0	1	1	1	5	5	1	1	1	1
	bsBDFrameLength	15	15	15	15	15	15	15	17	17	15	31	17	17	15	15
	bsBDSubframes	3	3	3	3	3	3	3	0	2	1	7	5	1	1	1
time slots / frame		16	16	16	16	16	16	16	18	18	16	32	18	18	16	16
parameter bands		28	28	28	28	28	28	28	28	28	28	28	28	28	28	28
tree configuration		2	2	2	2	0	1	2	3	4	5	6	2	2	2	2
quantization mode		0	0	0	0	0	0	0	0	0	0	0	0	0	0	0
one ICC		0	0	0	0	0	0	0	0	0	0	0	0	0	0	0
arbitrary downmix		0	0	0	0	0	0	0	0	0	0	0	0	0	0	0
arbitrary tree		0	0	0	0	0	0	0	0	0	0	0	0	0	0	0
surround gain		2	2	2	2	2	2	2	2	2	2	2	2	2	2	2
LFE gain		1	1	1	1	1	1	1	1	1	1	1	1	1	1	1
downmix gain		4	4	4	4	4	4	4	0	0	0	0	0	0	0	0
matrix comp. mode		0	0	1	0	0	0	0	0	0	0	0	0	0	0	0
temp shape config		0	2	1	0	0	0	0	0	0	0	0	0	0	0	0
decorr config		0	0	0	0	0	2	0	0	0	0	0	0	0	0	0
energy based qu.		0	0	0	0	0	0	0	0	0	0	0	0	0	0	0
3D stereo		0	0	0	0	0	0	0	0	0	0	0	0	0	0	0
number of LFE bands		2	2	2	2	2	2	2	2	2	2	2	2	2	2	2

© ISO/IEC 2008 – All rights reserved
Copyright International Organization for Standardization
Provided by IHS under license with ISO
No reproduction or networking permitted without license from IHS
Not for Resale

residual coding	1	0	0	0	0	0	0	0	0	0	0	0	0	0	1	1
arbitrary downmix residual	0	0	0	0	0	0	0	0	0	0	0	0	0	0	0	0
residual sampling rate	48000	--	--	--	--	--	--	--	--	--	--	--	--	--	48000	48000
number of residual frames	1	--	--	--	--	--	--	--	--	--	--	--	--	--	1	1
number of residual bands	7,7,7,7	--	--	--	--	--	--	--	--	--	--	--	--	--	0,18,18,19	0,18,18,19
TttModeLow	1	1	1	1	--	--	1	1	1	1	1	1	1	1	1	1
TttLow start band	0	0	0	0	--	--	0	0	0	0	0	0	0	0	0	0
TttLow stop band	28	28	28	28	--	--	28	28	28	28	28	28	28	28	28	28
TttModeHigh	0	0	0	0	--	--	0	0	0	0	0	0	0	0	0	0
TttHigh start band	--	--	--	--	--	--	--	--	--	--	--	--	--	--	--	--
TttHigh stop band	--	--	--	--	--	--	--	--	--	--	--	--	--	--	--	--
bsSmoothMode	0	0	0	0 ... 3	0	0	0	0	0	0	0	0	0	0	0	0
bsQuantCoarseXXX	0	0	0	0	0	0	0	0	0	0	0	0	0	0	0	0

Table AMD1.15 — List of MPEG Surround conformance test sequences with PCM downmix (ctd.)

Sequence		**pcm_mps_ts_8**	**pcm_mps_ts_15**	**pcm_mps_ts_16**	**pcm_mps_ts_18**	**pcm_mps_ts_24**	**pcm_mps_ts_30**	**pcm_mps_ts_32**	**pcm_mps_ts_36**	**pcm_mps_ts_48**	**pcm_mps_ts_60**	**pcm_mps_ts_64**	**pcm_mps_ts_72**
core coder	**sampling frequency**	48000	48000	48000	48000	48000	48000	48000	48000	48000	48000	48000	48000
	sample resolution	16	16	16	16	16	16	16	16	16	16	16	16
	bsBDChannels	1	1	1	1	1	1	1	1	1	1	1	1

© ISO/IEC 2008 – All rights reserved
Copyright International Organization for Standardization
Provided by IHS under license with ISO
No reproduction or networking permitted without license from IHS
Not for Resale

	bsBDFrameLength	7	14	15	17	23	29	31	35	47	59	63	71
	bsBDSubframes	0	2	1	5	3	4	3	5	7	5	7	7
time slots / frame		8	15	16	18	24	30	32	36	48	60	64	72
parameter bands		28	28	28	28	28	28	28	28	28	28	28	28
tree configuration		2	2	2	2	2	2	2	2	2	2	2	2
quantization mode		0	0	0	0	0	0	0	0	0	0	0	0
one ICC		0	0	0	0	0	0	0	0	0	0	0	0
arbitrary downmix		0	0	0	0	0	0	0	0	0	0	0	0
arbitrary tree		0	0	0	0	0	0	0	0	0	0	0	0
surround gain		2	2	2	2	2	2	2	2	2	2	2	2
LFE gain		1	1	1	1	1	1	1	1	1	1	1	1
downmix gain		0	0	0	0	0	0	0	0	0	0	0	0
matrix comp. mode		0	0	0	0	0	0	0	0	0	0	0	0
temp shape config		0	0	0	0	0	0	0	0	0	0	0	0
decorr config		0	0	0	0	0	0	0	0	0	0	0	0
energy based qu.		0	0	0	0	0	0	0	0	0	0	0	0
3D stereo		0	0	0	0	0	0	0	0	0	0	0	0
number of LFE bands		2	2	2	2	2	2	2	2	2	2	2	2
residual coding		0	1	1	1	1	1	1	0	0	0	0	0
arbitrary downmix residual		0	0	0	0	0	0	0	0	0	0	0	0
residual sampling rate		--	48000	48000	32000	32000	22050	24000	--	--	--	--	--
number of residual frames		--	1	1	1	1	1	1	--	--	--	--	--
number of residual bands		--	0,18,18,19	0,18,18,19	0,18,18,19	0,18,18,19	0,18,18,19	0,18,18,19	--	--	--	--	--
TttModeLow		1	1	1	1	1	1	1	1	1	1	1	1
TttLow start band		0	0	0	0	0	0	0	0	0	0	0	0

Copyright International Organization for Standardization
Provided by IHS under license with ISO
No reproduction or networking permitted without license from IHS
Not for Resale
© ISO/IEC 2008 – All rights reserved

TttLow stop band	28	28	28	28	28	28	28	28	28	28	28	28
TttModeHigh	0	0	0	0	0	0	0	0	0	0	0	0
TttHigh start band	-	-	-	-	-	-	-	-	-	-	-	-
TttHigh stop band	-	-	-	-	-	-	-	-	-	-	-	-
bsSmoothMode	0	0	0	0	0	0	0	0	0	0	0	0
bsQuantCoarseXXX	0	0	0	0	0	0	0	0	0	0	0	0

--`,,```,,,,````-`-`,,`,,`,`,,`---

© ISO/IEC 2008 – All rights reserved

Copyright International Organization for Standardization
Provided by IHS under license with ISO
No reproduction or networking permitted without license from IHS
Not for Resale

ICS 35.040

Price based on 12 pages

© ISO/IEC 2008 – All rights reserved
Copyright International Organization for Standardization
Provided by IHS under license with ISO
No reproduction or networking permitted without license from IHS
Not for Resale