INTERNATIONAL STANDARD

**ISO/IEC 23001-2**

First edition
2008-02-01

# Information technology — MPEG systems technologies —

## Part 2: Fragment request units

*Technologies de l'information — Technologies des systèmes MPEG —*

*Partie 2: Unités de demande de fragment*

Reference number
ISO/IEC 23001-2:2008(E)




© ISO/IEC 2008

Copyright International Organization for Standardization
Provided by IHS under license with ISO
No reproduction or networking permitted without license from IHS

Not for Resale

**PDF disclaimer**

This PDF file may contain embedded typefaces. In accordance with Adobe's licensing policy, this file may be printed or viewed but shall not be edited unless the typefaces which are embedded are licensed to and installed on the computer performing the editing. In downloading this file, parties accept therein the responsibility of not infringing Adobe's licensing policy. The ISO Central Secretariat accepts no liability in this area.

Adobe is a trademark of Adobe Systems Incorporated.

Details of the software products used to create this PDF file can be found in the General Info relative to the file; the PDF-creation parameters were optimized for printing. Every care has been taken to ensure that the file is suitable for use by ISO member bodies. In the unlikely event that a problem relating to it is found, please inform the Central Secretariat at the address given below.



**COPYRIGHT PROTECTED DOCUMENT**

© ISO/IEC 2008

All rights reserved. Unless otherwise specified, no part of this publication may be reproduced or utilized in any form or by any means, electronic or mechanical, including photocopying and microfilm, without permission in writing from either ISO at the address below or ISO's member body in the country of the requester.

ISO copyright office
Case postale 56 • CH-1211 Geneva 20
Tel. + 41 22 749 01 11
Fax + 41 22 749 09 47
E-mail copyright@iso.org
Web www.iso.org

Published in Switzerland



Copyright International Organization for Standardization
Provided by IHS under license with ISO
No reproduction or networking permitted without license from IHS

© ISO/IEC 2008 – All rights reserved

Not for Resale

# Contents

Page

**Foreword** ... iv
**Introduction** ... v
**1 Scope** ... 1
**2 Normative references** ... 1
**3 Terms and definitions** ... 1
**4 Abbreviated terms** ... 3
**5 Overview** ... 3
**6 Systems model** ... 4
**7 Request format** ... 6
**7.1 Overview** ... 6
**7.2 FRU element** ... 6
**7.3 SrcType** ... 7
**7.4 QueryType** ... 8
**7.5 XMLPullType** ... 9
**7.6 levelDepth attribute** ... 10
**8 Response format** ... 11
**8.1 Fragment Update Units** ... 11
**8.2 Namespace information** ... 11
**8.3 defaultns attribute** ... 12
**Annex A** (informative) **W3C XML Schema for FRUs** ... 13
**Annex B** (normative) **Use of FRUs in ISO/IEC 15938-1** ... 15
**B.1 Introduction** ... 15
**B.2 Textual Format - TeM** ... 16
**Annex C** (informative) **Examples** ... 17
**Annex D** (informative) **Patent Statements** ... 20
**Bibliography** ... 21

© ISO/IEC 2008 – All rights reserved

Copyright International Organization for Standardization
Provided by IHS under license with ISO
No reproduction or networking permitted without license from IHS
Not for Resale

# Foreword

ISO (the International Organization for Standardization) and IEC (the International Electrotechnical Commission) form the specialized system for worldwide standardization. National bodies that are members of ISO or IEC participate in the development of International Standards through technical committees established by the respective organization to deal with particular fields of technical activity. ISO and IEC technical committees collaborate in fields of mutual interest. Other international organizations, governmental and non-governmental, in liaison with ISO and IEC, also take part in the work. In the field of information technology, ISO and IEC have established a joint technical committee, ISO/IEC JTC 1.

International Standards are drafted in accordance with the rules given in the ISO/IEC Directives, Part 2.

The main task of the joint technical committee is to prepare International Standards. Draft International Standards adopted by the joint technical committee are circulated to national bodies for voting. Publication as an International Standard requires approval by at least 75 % of the national bodies casting a vote.

Attention is drawn to the possibility that some of the elements of this document may be the subject of patent rights. ISO and IEC shall not be held responsible for identifying any or all such patent rights.

ISO/IEC 23001-2 was prepared by Joint Technical Committee ISO/IEC JTC 1, *Information technology*, Subcommittee SC 29, *Coding of audio, picture, multimedia and hypermedia information*.

ISO/IEC 23001 consists of the following parts, under the general title *Information technology — MPEG systems technologies*:

— *Part 1: Binary MPEG format for XML*

— *Part 2: Fragment request units*

— *Part 3: XML IPMP messages*

— *Part 5: Bitstream Syntax Description Language (BSDL)*

--`,,```,,,,````-`-`,,`,,`,`,,`---



© ISO/IEC 2008 – All rights reserved
Copyright International Organization for Standardization
Provided by IHS under license with ISO
No reproduction or networking permitted without license from IHS
Not for Resale

# Introduction

Today the use of Extensible Markup Language (XML) for many applications is widespread. This includes ISO International Standards such as ISO/IEC 15938 and ISO/IEC 21000. In addition there is increasing growth of applications being developed for resource constrained environments such as mobile platforms and set top boxes. Information utilized by such applications is often expressed in XML. When the size of such XML documents can be large, it is desirable to be able to request only those fragments of the XML required at a given time by the application. The technology in this International Standard is intended to address this.

The International Organization for Standardization (ISO) and International Electrotechnical Commission (IEC) draw attention to the fact that it is claimed that compliance with this document may involve the use of a patent.

The ISO and IEC take no position concerning the evidence, validity and scope of this patent right.

The holder of this patent right has assured the ISO and IEC that he is willing to negotiate licences under reasonable and non-discriminatory terms and conditions with applicants throughout the world. In this respect, the statement of the holder of this patent right is registered with the ISO and IEC. Information may be obtained from the companies listed in Annex D.

Attention is drawn to the possibility that some of the elements of this document may be the subject of patent rights other than those identified in Annex D. ISO and IEC shall not be held responsible for identifying any or all such patent rights.

--`,,```,,,,````-`-`,,`,,`,`,,`---
© ISO/IEC 2008 – All rights reserved
Copyright International Organization for Standardization
Provided by IHS under license with ISO
No reproduction or networking permitted without license from IHS
Not for Resale

Copyright International Organization for Standardization
Provided by IHS under license with ISO
No reproduction or networking permitted without license from IHS
Not for Resale

# Information technology — MPEG systems technologies —

# Part 2:
# Fragment request units

## 1 Scope

This part of ISOIEC 23001 specifies the fragment request unit technology. It comprises a syntax and semantics for expressing a request for fragments of XML. It also specifies how such requests can be used in XML based systems such as ISO/IEC 15938-1 and ISO/IEC 23001-1. The technology can be used in resource constrained environments so that only the fragments of XML of interest at a given time need be transmitted to a requesting peer from a responding peer. It can also be used for node-by-node navigation of a remote XML document.

## 2 Normative references

The following referenced documents are indispensable for the application of this document. For dated references, only the edition cited applies. For undated references, the latest edition of the referenced document (including any amendments) applies.

ISO/IEC 15938-1, *Information technology — Multimedia content description interface — Part 1: Systems*

IETF RFC 3986, *Uniform Resource Identifier (URI): Generic Syntax,* IETF Request For Comments, January 2005

W3C XML, *Extensible Markup Language (XML) 1.0 (Fourth Edition)*, W3C Recommendation, 29 September 2006

W3C XML NAMES, *Namespaces in XML 1.0 (Second Edition)*, W3C Recommendation, 16 August 2006

W3C XML SCHEMA, *XML Schema Part 1: Structures Second Edition* and *XML Schema Part 2: Datatypes Second Edition*, W3C Recommendations, 28 October 2004

W3C XPATH 1, XML Path Language (*XPath) Version 1.0*, W3C Recommendation, 16 November 1999

## 3 Terms and definitions

For the purposes of this document, the following terms and definitions apply.

**3.1**
**context processor**
part of a system that maintains information on the current Navigation or Query context resulting from processing FRUs

**3.2**
**fragment**
**XML document fragment**
portion of an XML document that need not be a well-formed XML document on its own but shall conform to the *content* production of W3C XML

NOTE In the Document Object Model (DOM) [2] this corresponds to a DocumentFragment

© ISO/IEC 2008 – All rights reserved

Copyright International Organization for Standardization
Provided by IHS under license with ISO
No reproduction or networking permitted without license from IHS
Not for Resale

**3.3**
**FRU processor**
part of a system that composes an FRU based on Query or Navigation information from the application layer (and possibly context information) and places it in an FRU Request for transport via the delivery layer and that receives FRU Requests and makes the FRU available for processing

NOTE This part of ISO/IEC 23001 defines syntax and semantics of the FRUs, it does not normatively define the interface between the application layer and the systems layer. This will be dependent on the system in which the FRUs are being processed. See also Clause 6.

**3.4**
**FRU Request**
system defined container that contains an FRU that can be transported over the delivery layer used by the system

NOTE This part of ISO/IEC 23001 defines syntax and semantics of the FRUs, it does not normatively define the composition of the FRU Requests. This will be dependent on the system in which the FRUs are being processed. See also Clause 6.

**3.5**
**FRU Response**
system defined container that contains an XML document fragment(s) resulting from processing of an FRU that can be transported over the delivery layer used by the system

NOTE This part of ISO/IEC 23001 defines syntax and semantics of the FRUs, it does not normatively define the composition of the FRU Responses. This will be dependent on the system in which the FRUs are being processed. See also Clause 6.

**3.6**
**FRU response processor**
part of a system that composes FRU Responses containing the XML document fragments resulting from processing of an FRU for transport via the delivery layer and that receives FRU Responses for forwarding of the delivered XML document fragments to the application layer

**3.7**
**Navigation**
traversing the structure of an XML document either on a node-by-node basis or a level-by-level basis

**3.8**
**null FRU Response**
FRU Response that contains no XML document fragment

NOTE While a null FRU Response contains no XML document fragment, it might contain additional system defined information dependent on the system in which the FRUs are being used. See also Clause 6.

**3.9**
**requesting peer**
system that composes FRU Requests, transmits them to the responding peer, and receives the FRU Responses

NOTE While typically the requesting peer and responding peer will be different physical systems they could also be on the same physical system. In terms of software systems they could also be the same software system, for example for purposes of simulation.

**3.10**
**responding peer**
system that receives FRU Requests, processes them to extract the XML document fragments from the source document, composes the FRU Responses and transmits them to the requesting peer

--`,,```,,,,````-`-`,,`,,`,`,,`---


© ISO/IEC 2008 – All rights reserved
Copyright International Organization for Standardization
Provided by IHS under license with ISO
No reproduction or networking permitted without license from IHS
Not for Resale

**3.11**
**source document**
**XML source document**
the XML document subject to Navigation and/or Query and from which fragments are being requested

**3.12**
**Query**
search or interrogate an XML document through the use of a query language

## 4 Abbreviated terms

For the purposes of this document, the following abbreviations apply.

**AU**: Access Unit, as defined in ISO/IEC 15938-1

**BiM**: Binary MPEG format for XML, as defined in ISO/IEC 23001-1

**DOM**: Document Object Model [2]

**FRU**: Fragment Request Unit

**FUU**: Fragment Update Unit, as defined in ISO/IEC 15938-1

**HTTP**: Hypertext Transfer Protocol [1]

**MPEG**: Moving Picture Experts Group

**MPEG-21**: ISO/IEC 21000

**MPEG-7**: ISO/IEC 15938

**MPEG-B**: ISO/IEC 23001

**SOAP**: SOAP Version 1.2 [3]

**TeM**: Textual format for Multimedia description schemes, as defined in ISO/IEC 15938-1

**URI**: Uniform Resource Identifier, as defined in IETF RFC 3986

**W3C**: World Wide Web Consortium

**XML**: Extensible Markup Language, as defined in W3C XML

## 5 Overview

Fragment request units (FRUs) provide a standard syntax and semantics to request fragments of an XML document. This allows requesting only fragments of an XML document that are of immediate interest be transmitted without the need to transmit the entire XML document. This significantly reduces processing and storage requirements for the requesting peer and can enable applications on constrained devices that would not otherwise be possible. FRUs enable the requesting application to maintain control over how and what parts of the XML document are delivered.

NOTE A typical scenario for the use of FRUs in the context of ISO/IEC 15938-1 is as follows: The application requests a fragment of an XML document. The ISO/IEC 15938-1 Systems layer composes this request into an FRU (optionally binarised using BiM), which is provided to the delivery layer. The remote device responds with one or more ISO/IEC 15938-1 Fragment Update Units (optionally binarised using BiM), which are received by the delivery layer and processed by the ISO/IEC 15938-1 Systems Layer before being passed to the application. The application may request

© ISO/IEC 2008 – All rights reserved

Copyright International Organization for Standardization
Provided by IHS under license with ISO
No reproduction or networking permitted without license from IHS
Not for Resale

further fragments based on the FUUs received or on other information. This scenario provides a description of how FRUs can be used in the context of ISO/IEC 15938-1 (see also Annex B), however the use of ISO/IEC 15938-1 for handling FRUs (and vice versa, that is use of FRUs in ISO/IEC 15938-1) is not normative.

Fragments of an XML document can be requested for the purpose of Navigation through, or Querying of the remote XML document.

Navigation involves stepping though the XML structure either on a node-by-node basis (i.e. one selected element at a time) or a level-by-level basis (i.e. immediate child nodes of a selected element), retrieving only the nodes relevant to the node or level.

Querying allows queries to be performed on the remote XML document (i.e. sending an FRU with an XPath expression) to request fragments based on the result of the XPath expression.

## 6 Systems model

This International Standard specifies the standard syntax and semantics for FRUs to allow requesting of XML document fragments using this standard syntax and semantics. Thus FRUs provide a standard syntax and semantics for expressing a request for XML document fragments.

However, FRUs do not operate in isolation, and instead are incorporated in to systems that require the functionality enabled by FRUs. Within such a system an FRU is composed from information supplied by the application, placed in to an FRU Request appropriate for the system, and the FRU Request is transported to another system. The responding system extracts the FRU from the FRU Request, processes the FRU, places the XML document fragments in to an FRU Response appropriate for the system, and the FRU Response is transported to the requesting system.

FRUs can be utilized in any system that provides this basic model of operation for FRUs. This International Standard does not normatively specify any such system or parts of such a system. However this clause provides a descriptive model of how FRUs could operate within a system. Only those parts of the system dealing with FRUs are described. Other parts of the system will be dependent on the system in which the FRUs are being processed.

EXAMPLE 1 Transport of FRU requests and their responses could use well known and standardized protocols such as SOAP or HTTP.

EXAMPLE 2 Prior to transport, a system could also encode FRUs, for example using BiM.

A requesting peer issues Navigation or Query requests from the application layer to the systems layer. This request is processed to determine if path context is to be retained (required for `XMLPull` operations and XPaths utilizing the ./ notation). The FRU shall be composed according to the syntax defined in clause 7 and an FRU Request assembled as appropriate for the system in use. The FRU Request is delivered to the responding peer via the delivery layer.

A responding peer receives an FRU Request, extracts and processes the FRU and determines its context. The appropriate operations shall be executed according to the semantics defined in clause 7. The operations are executed against the XML source document identified by a previous `Src` operation. The result of the operations will be the appropriate XML document fragment(s). An FRU Response containing the XML document fragment(s) is assembled as appropriate for the system in use and delivered back to the requesting peer.

The XML document fragments are extracted from the FRU Response and delivered to the application layer.

NOTE 1 In some systems the XML document fragments might not be delivered directly to the application layer. For example in the context of ISO/IEC 15938-1 the fragments are received directly as FUUs in to the ISO/IEC 15938 systems layer and instead of being delivered to the application directly, are applied to update the current document tree as per ISO/IEC 15938-1.


© ISO/IEC 2008 – All rights reserved
Copyright International Organization for Standardization
Provided by IHS under license with ISO
No reproduction or networking permitted without license from IHS
Not for Resale

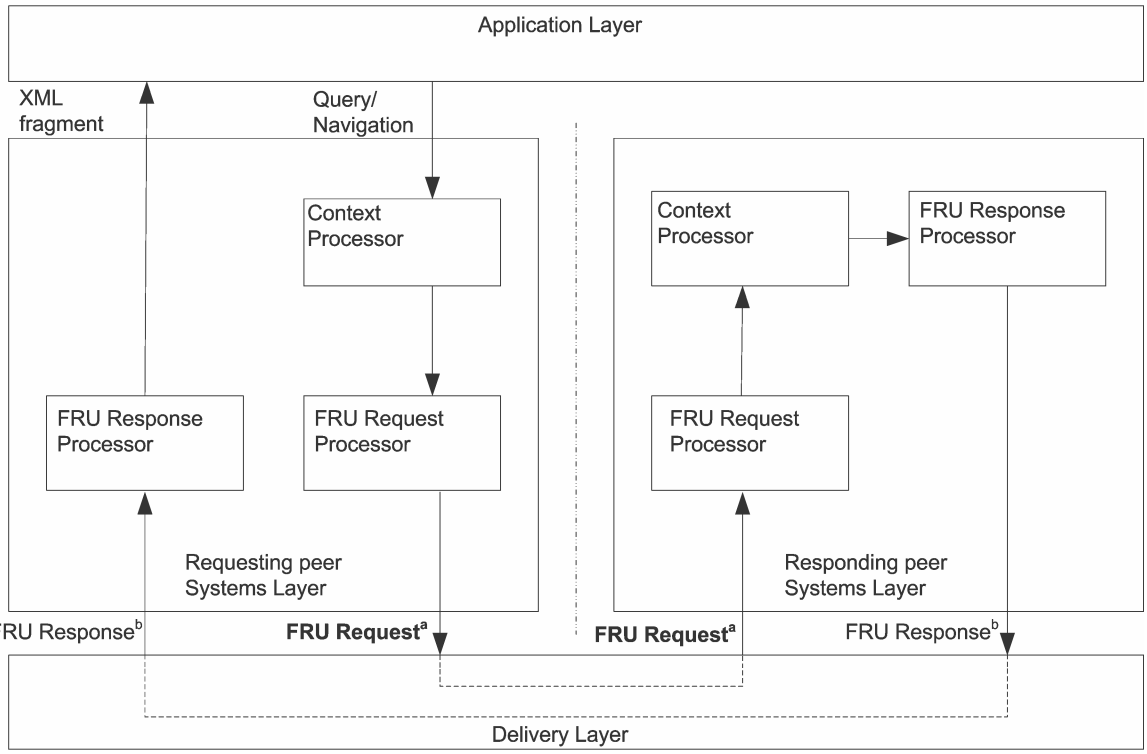


[a] This International Standard normatively defines the syntax and semantics for the Fragment Request Units (FRUs).

[b] ISO/IEC 15938-1 defines the syntax and semantics for Fragment Update Units (FUUs) that are contained in the FRU Response.

**Figure 1 — FRU systems model**

The number of FRU Responses sent in response to an FRU Request is dependent on the system. In the simplest case there might be a single FRU Response for each FRU Request. In this case the FRU Response should allow for responding to multiple operations in a single FRU and for an operation that results in multiple XML document fragments. For FRUs containing multiple operations, the resulting XML document fragments should be forwarded to the application in the same order as the corresponding operations as they appear in document order in the FRU.

NOTE 2 A system could allow out of order responses if, for example, it also included in the FRU Request and FRU Response some sequencing information.

In other cases a system might use one or more FRU Responses per FRU Request.

NOTE 3 In such a system the FRU Response processor might collect the XML document fragments delivered in the FRU Responses until all the XML document fragments resulting from a given FRU are received, then forward these to the application layer.

If processing an FRU fails on the responding peer, a null FRU Response should be delivered back to the requesting peer. The responding system may also respond with an error response appropriate for the system in use.

© ISO/IEC 2008 – All rights reserved

Copyright International Organization for Standardization
Provided by IHS under license with ISO
No reproduction or networking permitted without license from IHS
Not for Resale

# 7 Request format

## 7.1 Overview

The following subclauses specify the syntax elements and associated semantics of the Fragment Request Units.

FRUs are expressed in W3C XML. The XML element tags of the FRUs shall be in an XML namespace identified by a URI as specified in W3C XMLNAMES. The value of the FRU namespace URI shall be:

urn:mpeg:mpegB:schema:FragmentRequestUnits:2007

NOTE Throughout this document the namespace URI `urn:mpeg:mpegB:schema:FragmentRequestUnits:2007` is mapped to the prefix `fru`. This namespace prefix mapping is not normative.

The syntax for FRUs is specified in the following subclauses using W3C XMLSCHEMA. While the elements and attributes are presented separately it is to be understood that the schema fragments are part of a whole W3C XMLSCHEMA document where the containing schema element is as shown below.

```
<?xml version="1.0" encoding="UTF-8"?>
<schema xmlns="http://www.w3.org/2001/XMLSchema"
  xmlns:fru="urn:mpeg:mpegB:schema:FragmentRequestUnits:2007"
  targetNamespace="urn:mpeg:mpegB:schema:FragmentRequestUnits:2007"
  elementFormDefault="qualified" attributeFormDefault="unqualified"
  version="1.0">

  <!-- The schema components go here -->

</schema>
```

## 7.2 FRU element

### 7.2.1 Syntax

```
  <!--****************** FRU Global Element **********************-->
  <element name="FRU">
    <complexType>
      <sequence>
        <element name="Src" type="fru:SrcType" minOccurs="0"/>
        <choice minOccurs="0">
          <element name="Query" type="fru:QueryType" maxOccurs="unbounded"/>
          <element name="XMLPull" type="fru:XmlPullType" maxOccurs="unbounded"/>
        </choice>
      </sequence>
    </complexType>
  </element>
```


© ISO/IEC 2008 – All rights reserved
Copyright International Organization for Standardization
Provided by IHS under license with ISO
No reproduction or networking permitted without license from IHS
Not for Resale

### 7.2.2 Semantics

| *Name* | *Definition* |
|---|---|
| FRU | The root element of a Fragment Request Unit. Contains an optional `Src` element and zero or more `Query`, or zero or more `XMLPull` operations. Operations shall be processed in document order as they occur in the FRU.<br><br>EXAMPLE A resource-constrained application that knows part of the expected structure of an XML document to a certain depth can use a `Query` operation to establish the context, and then include one or more `XMLPull` operations to navigate node-by-node using the succinct syntax of the `XMLPull` operations. |
| Src | Identifies the XML document from which fragments are being requested.<br><br>It is required that at least one `Src` operation is processed before other operation types can be processed. A `Src` operation shall appear at most once within a single FRU. FRUs not containing a `Src` operation shall operate upon the XML document identified by the previous `Src` operation that has been specified in an earlier FRU.<br><br>See also 7.3. |
| Query | Used to perform Queries upon the XML document.<br><br>Several `Query` operations may be present within a single FRU to perform multiple queries upon the XML document.<br><br>See also 7.4. |
| XMLPull | Performs Navigation of the XML document on a node-by-node basis.<br><br>Several `XMLPull` operations may be present within a single FRU to perform multiple navigation steps of the XML document.<br><br>See also 7.5. |

## 7.3 SrcType

### 7.3.1 Syntax

```
<!--******************** Src Element Type***********************-->
<complexType name="SrcType">
  <simpleContent>
    <extension base="anyURI">
      <attribute name="mode" use="optional" default="open">
        <simpleType>
          <restriction base="string">
            <enumeration value="open"/>
            <enumeration value="closed"/>
          </restriction>
        </simpleType>
      </attribute>
      <attribute name="namespaces" type="boolean" use="optional"
                 default="false"/>
    </extension>
  </simpleContent>
</complexType>
```

© ISO/IEC 2008 – All rights reserved

Copyright International Organization for Standardization
Provided by IHS under license with ISO
No reproduction or networking permitted without license from IHS
Not for Resale

### 7.3.2 Semantics

| *Name* | *Definition* |
|---|---|
| SrcType | Identifies the XML document from which fragments are being requested.<br><br>The value contained in an element of type `SrcType` shall be a URI (IETF RFC 3986) identifying the source XML document. |
| mode | For a `Src` operation there are two possible modes:<br><br>a) `open` – This indicates that current context (state information) be maintained (sending side). This allows XPath commands such as ./ (to specify current node as last sent) rather then specifying the entire XPath Expression. This is the default mode.<br><br>b) `closed` – This indicates that current context information is not needed on the sending side. It can be used for one off queries. |
| namespaces | Indicates whether the requesting peer wants namespace information included or not. See also 8.2. |

## 7.4 QueryType

### 7.4.1 Syntax

```
<!--****************** Query Element type*********************-->
<complexType name="QueryType">
  <simpleContent>
    <extension base="string">
      <attribute name="navMode" type="boolean" default="false"/>
      <attribute ref="fru:levelDepth" use="optional"/>
    </extension>
  </simpleContent>
</complexType>
```

### 7.4.2 Semantics

| *Name* | *Definition* |
|---|---|
| QueryType | Used to perform Queries upon the XML document.<br><br>The value contained in an element of type `QueryType` is a query expression which shall be an XPath expression as defined by W3C XPATH1.<br><br>The XPath expression shall be evaluated against the XML document identified by the most recently executed `Src` operation.<br><br>The context for the XPath expression evaluation depends on the mode indicated by the most recently executed `Src` operation.<br><br>If the mode is `open`, the context shall be the last node of the last XML document fragment resulting from the most recent operation executed. If no |


Copyright International Organization for Standardization
Provided by IHS under license with ISO
No reproduction or networking permitted without license from IHS
© ISO/IEC 2008 – All rights reserved
Not for Resale

| | |
|---|---|
| | operation has yet been executed that results in an XML document fragment containing nodes, then the context is the document root. In determining the last node, nodes that are included due to a value for the `levelDepth` attribute that is greater than zero shall be ignored.<br><br>If the mode is `closed`, the context shall be the document root. |
| navMode | If the value of the `navMode` attribute is true, then this indicates a Navigation mode, in which case only the immediate children of the node(s) matched by the query expression are sent (this is referred to as navigation on a level-by-level basis). When `navMode` is false, this indicates Query mode, in which case the node(s) matched by the query expression and its immediate children are sent. |
| levelDepth | An optional `levelDepth` attribute may be used to indicate the number of levels of descendents of the immediate children of the node(s) matched by the query expression which are also to be returned. A value of -1 indicates all descendants of the immediate children are also to be returned.<br><br>See also 7.6.<br><br>EXAMPLE 1 In Navigation mode, a value of 2 for the `levelDepth` attribute would return the immediate children of the node matched by the query expression and the descendants of these immediate children to a depth of 2 (total depth of returned XML document fragment would be 3).<br><br>EXAMPLE 2 In Query mode, a value of 1 for the `levelDepth` attribute would return the node matched by the query expression, its immediate children, and the descendants of these immediate children to a depth of 1 (total depth of returned XML document fragment would be 3). |

## 7.5 XMLPullType

### 7.5.1 Syntax

```
<!--***************** XMLPull Element type *********************-->
<complexType name="XmlPullType">
  <attribute name="command" type="fru:xmlPullCommandType" use="required"/>
  <attribute ref="fru:levelDepth" use="optional"/>
</complexType>

<!--**************** XMLPull Command Type ***********************-->
<simpleType name="xmlPullCommandType">
  <restriction base="string">
    <enumeration value="followingSibling"/>
    <enumeration value="children"/>
    <enumeration value="parent"/>
    <enumeration value="previousSibling"/>
  </restriction>
</simpleType>
```

© ISO/IEC 2008 – All rights reserved
Copyright International Organization for Standardization
Provided by IHS under license with ISO
No reproduction or networking permitted without license from IHS
Not for Resale

### 7.5.2 Semantics

| *Name* | *Definition* |
|---|---|
| XmlPullType | Performs navigation of the XML document on a node-by-node basis.<br><br>A node is returned relative to the most recent node requested via an FRU. If no other FRU operations other than a `Src` operation has been processed, the current node shall be the document root. In determining the most recent node, nodes that are included due to a value for the `levelDepth` attribute that is greater than zero shall be ignored. |
| command | Specifies the XML Pull navigation command to be processed. Semantics for the possible XML Pull navigation commands are shown in Table 1 — XML Pull navigation commands. |
| levelDepth | An optional `levelDepth` attribute may be used to specify the number of levels of descendents of the node selected by the command which are also to be returned. A value of -1 indicates all descendants of the node are to be returned.<br><br>See also 7.6. |

**Table 1 — XML Pull navigation commands**

| Name | Definition |
|---|---|
| followingSibling | Returns the following sibling of the most recent node requested via an FRU. |
| children | Returns the most recent node requested via an FRU along with all of its immediate children. |
| parent | Returns the parent of the most recent node requested via an FRU. |
| previousSibling | Returns the previous sibling of the most recent node requested via an FRU. |

## 7.6 levelDepth attribute

### 7.6.1 Syntax

```
<!--**************** LevelDepth attribute **********************-->
<attribute name="levelDepth" type="fru:minusOneOrNonNegativeInteger"
           default="0"/>

<!--************** minusOneOrNonNegativeInteger type ************-->
<simpleType name="minusOneOrNonNegativeInteger">
  <restriction base="integer">
    <minInclusive value="-1"/>
  </restriction>
</simpleType>
```

--`,,```,,,,````-`-`,,`,,`,`,,`---



© ISO/IEC 2008 – All rights reserved
Copyright International Organization for Standardization
Provided by IHS under license with ISO
No reproduction or networking permitted without license from IHS
Not for Resale

### 7.6.2 Semantics

| *Name* | *Definition* |
|---|---|
| levelDepth | Indicates the number of levels of descendents which are to be returned.<br><br>A value of -1 indicates all descendants.<br><br>A value of 0 indicates no descendants are to be returned (i.e. only the node or nodes determined by the semantics of the remaining information in the operation are to be returned). |

# 8 Response format

## 8.1 Fragment Update Units

The XML document fragments returned in response to an FRU shall be contained in Fragment Update Units (FUUs). The syntax and semantics for FUUs are defined in ISO/IEC 15938-1.

NOTE 1 If a query or navigation step does not match any nodes the FUPayload of the FUU will be empty.

NOTE 2 If a query or navigation step results in multiple FUUs, these could be bundled within a single FRU Response. For example within the context of an ISO/IEC 15938-1 system the FUUs could be bundled within a single AU.

## 8.2 Namespace information

If the `namespace` attribute is present on a `Src` element and its value is true, then subsequent FUUs returned by the responding peer shall include namespace information as described in this subclause.

NOTE Whether namespace information is to be included is dependent on the requesting peer. In some systems the namespace information might be available by other means, therefore is not required to be sent with the FRU Responses.

If the XML document fragment contained in the first FUU returned after processing a Src operation uses a default namespace, this default namespace shall be declared on the `FUPayload` element using the `defaultns` attribute (see 8.3) or a default namespace declarations as per W3C XMLNAMES (and in which case the `FUPayload` element shall use a namespace prefix mapped to the MPEG-7 systems namespace). If XML document fragments contained in subsequent FUUs use the same default namespace, then the `defaultns` attribute nor a default namespace declaration as per W3C XMLNAMES need not be present on the `FUPayload` element. If XML document fragments contained in subsequent FUUs use a different default namespace, then the `defaultns` attribute or a default namespace declaration as per W3C XMLNAMES shall be present on the `FUPayload` element. If the `defaultns` attribute or default namespace declaration as per W3C XMLNAMES is not present on an `FUPayload` element, then the default namespace of the XML document fragment contained in the `FUPayload` shall be that declared by the previous occurrence of a `defaultns` attribute or default namespace declaration as per W3C XMLNAMES on a previous `FUPayload` element.

If the XML document fragment contained in an FUU contains elements that use a namespace prefix(es), the namespace declaration(s) shall be declared on the `FUPayload` element as per W3C XMLNAMES. If XML document fragments contained in subsequent FUUs use the same prefix(es) mapped to the same namespace(s), then the namespace declarations need not be present on the `FUPayload` element. If XML document fragments contained in subsequent FUUs use different prefix(es) or the same prefix(es) mapped to different namespaces, then the namespace declarations shall be present on the `FUPayload` element. If a namespace declaration is not present on an `FUPayload` element and the XML document fragment contains elements using a namespace prefix, then the prefix shall be mapped to the namespace as declared in the previous occurrence of a namespace declaration for the prefix on an `FUPayload` element.

© ISO/IEC 2008 – All rights reserved

Copyright International Organization for Standardization
Provided by IHS under license with ISO
No reproduction or networking permitted without license from IHS
Not for Resale

## 8.3 defaultns attribute

### 8.3.1 Syntax

```
<!--**************** DefaultNS attribute **********************-->
<attribute name="defaultns" type="anyURI"/>
```

### 8.3.2 Semantics

| *Name* | *Definition* |
|---|---|
| defaultns | Indicates the default namespace as declared in the XML source document for the XML document fragment contained in an `FUPayload`.<br><br>For further information on use of the `defaultns` attribute see 8.2, |


© ISO/IEC 2008 – All rights reserved
Copyright International Organization for Standardization
Provided by IHS under license with ISO
No reproduction or networking permitted without license from IHS
Not for Resale

# Annex A
(informative)

# W3C XML Schema for FRUs

This Annex provides a complete W3C XMLSCHEMA Schema for Fragment Request Units.

```
<?xml version="1.0" encoding="UTF-8"?>
<schema xmlns="http://www.w3.org/2001/XMLSchema"
  xmlns:fru="urn:mpeg:mpegB:schema:FragmentRequestUnits:2007"
  targetNamespace="urn:mpeg:mpegB:schema:FragmentRequestUnits:2007"
  elementFormDefault="qualified" attributeFormDefault="unqualified"
  version="1.0">
  <!--****************** FRU Global Element **********************-->
  <element name="FRU">
    <complexType>
      <sequence>
        <element name="Src" type="fru:SrcType" minOccurs="0"/>
        <choice minOccurs="0">
          <element name="Query" type="fru:QueryType" maxOccurs="unbounded"/>
          <element name="XMLPull" type="fru:XmlPullType" maxOccurs="unbounded"/>
        </choice>
      </sequence>
    </complexType>
  </element>
  <!--******************** Src Element Type***********************-->
  <complexType name="SrcType">
    <simpleContent>
      <extension base="anyURI">
        <attribute name="mode" use="optional" default="open">
          <simpleType>
            <restriction base="string">
              <enumeration value="open"/>
              <enumeration value="closed"/>
            </restriction>
          </simpleType>
        </attribute>
        <attribute name="namespaces" type="boolean" use="optional"
                   default="false"/>
      </extension>
    </simpleContent>
  </complexType>
  <!--******************** Query Element type**********************-->
  <complexType name="QueryType">
    <simpleContent>
      <extension base="string">
        <attribute name="navMode" type="boolean" default="false"/>
        <attribute ref="fru:levelDepth" use="optional"/>
      </extension>
    </simpleContent>
  </complexType>
  <!--***************** XMLPull Element type ********************-->
  <complexType name="XmlPullType">
    <attribute name="command" type="fru:xmlPullCommandType" use="required"/>
    <attribute ref="fru:levelDepth" use="optional"/>
  </complexType>
```

© ISO/IEC 2008 – All rights reserved

Copyright International Organization for Standardization
Provided by IHS under license with ISO
No reproduction or networking permitted without license from IHS
Not for Resale

```
  <!--***************** XMLPull Command Type ***********************-->
  <simpleType name="xmlPullCommandType">
    <restriction base="string">
      <enumeration value="followingSibling"/>
      <enumeration value="children"/>
      <enumeration value="parent"/>
      <enumeration value="previousSibling"/>
    </restriction>
  </simpleType>

  <!--***************** LevelDepth attribute ***********************-->
  <attribute name="levelDepth" type="fru:minusOneOrNonNegativeInteger"
    default="0"/>
  <!--************** minusOneOrNonNegativeInteger type ************-->
  <simpleType name="minusOneOrNonNegativeInteger">
    <restriction base="integer">
      <minInclusive value="-1"/>
    </restriction>
  </simpleType>
</schema>
```

--`,,```,,,,````-`-`,,`,,`,`,,`---



Copyright International Organization for Standardization
Provided by IHS under license with ISO
No reproduction or networking permitted without license from IHS
Not for Resale
© ISO/IEC 2008 – All rights reserved

# Annex B
(normative)

# Use of FRUs in ISO/IEC 15938-1

## B.1 Introduction

An ISO/IEC 15938-1 terminal need not support FRUs. However, if the terminal does provide support for FRUs, then this Annex specifies how that support shall be provided.

The ISO/IEC 15938-1 Index Encoding allows a terminal to easily determine which fragments contain information of immediate interest. Fragment Request Units can provide a complementary functionality by allowing a terminal to request that only fragments of immediate interest be transmitted in the first place. This significantly reduces processing and storage requirements at the terminal and can enable applications on constrained devices that would not otherwise be possible.

The addition of a Fragment Request plane to a 15938-1 terminal is shown in Figure B.1. The figure shows the extensions to the Terminal Architecture incorporating FRUs.

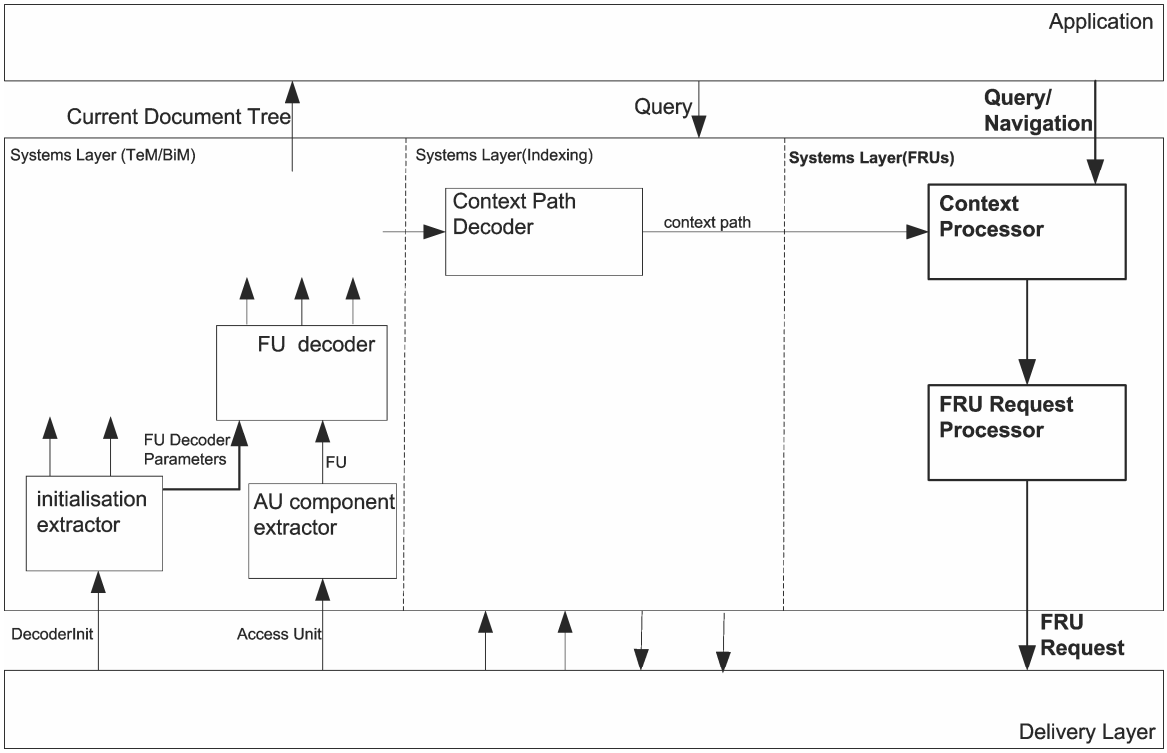


NOTE Not all elements of the terminal architecture are shown. For the complete terminal architecture see ISO/IEC 15938-1.

**Figure B.1 — FRU enabled ISO/IEC 15938-1 Terminal Architecture extension**

© ISO/IEC 2008 – All rights reserved

Copyright International Organization for Standardization
Provided by IHS under license with ISO
No reproduction or networking permitted without license from IHS
Not for Resale

## B.2 Textual Format - TeM

When FRUs are used in the context of TeM as specified in ISO/IEC 15938-1, the FRU syntax and semantics as specified in Clause 7 shall be used.

In response to an FRU, zero or more FUUs as specified in TeM shall be sent to the requesting peer such that the FUUs will result in the requested XML document fragments being available in the document tree on the requesting peer.

NOTE In the context of TeM making the requested XML document fragments available could require additional FUUs to correctly maintain the structure of the document tree on the requesting peer.

--`,,```,,,,````-`-`,,`,,`,`,,`---



© ISO/IEC 2008 – All rights reserved
Copyright International Organization for Standardization
Provided by IHS under license with ISO
No reproduction or networking permitted without license from IHS
Not for Resale

# Annex C
(informative)

# Examples

The following examples demonstrate the application of FRUs.

EXAMPLE 1 The following is an example Mpeg 7 Source Document called test_mpeg7.xml. This document will be considered the source document for all following examples:

```
<Mpeg7 xmlns="urn:mpeg:mpeg7:schema:2001">
  <Description xsi:type="SemanticDescriptionType">
    <Semantics>
      <Label>
        <Name> Computer </Name>
      </Label>
      <Definition>
        <FreeTextAnnotation>
          Laptop
        </FreeTextAnnotation>
      </Definition>
      <MediaOccurrence>
        <MediaLocator>
          <MediaUri> image.jpg </MediaUri>
        </MediaLocator>
      </MediaOccurrence>
    </Semantics>
  </Description>
</Mpeg7>
```

EXAMPLE 2 The following is an example FRU:

```
<FRU xmlns="urn:mpeg:mpegB:schema:FragmentRequestUnits:2007"
    xmlns:mpeg7="urn:mpeg:mpeg7:schema:2001">
    <Src>test_mpeg7.xml</Src>
    <Query navMode="true">
        /mpeg7:Mpeg7/mpeg7:Description/mpeg7:Semantics
    </Query>
</FRU>
```

EXAMPLE 3 The following is an example of an FUU as a result from FRU of EXAMPLE 2:

```
<FragmentUpdateUnit xmlns="urn:mpeg:mpeg7:systems:2001"
    xmlns:mpeg7="urn:mpeg:mpeg7:schema:2001">
    <FUCommand>addNode</FUCommand>
    <FUContext>/mpeg7:Mpeg7/mpeg7:Description/mpeg7:Semantics</FUContext>
    <FUPayload>
        <Label/>
        <Definition/>
        <MediaOccurence/>
    </FUPayload>
</FragmentUpdateUnit>
```

--`,,```,,,,````-`-`,,`,,`,`,,`---
© ISO/IEC 2008 – All rights reserved

Copyright International Organization for Standardization
Provided by IHS under license with ISO
No reproduction or networking permitted without license from IHS
Not for Resale

EXAMPLE 4 The following is an example of an FUU as a result from FRU of EXAMPLE 2 except this time with `levelDepth` = 2:

```
<FragmentUpdateUnit xmlns="urn:mpeg:mpeg7:systems:2001"
    xmlns:mpeg7="urn:mpeg:mpeg7:schema:2001">
    <FUCommand>addNode</FUCommand>
    <FUContext>/mpeg7:Mpeg7/mpeg7:Description/mpeg7:Semantics</FUContext>
    <FUPayload>
        <Label>
            <Name/>
        </Label>
        <Definition>
            <FreeTextAnnotation/>
        </Definition>
        <MediaOccurence>
            <MediaLocator/>
        </MediaOccurence>
    </FUPayload>
</FragmentUpdateUnit>
```

EXAMPLE 5 The following is an example of an FUU as a result from FRU of EXAMPLE 2 except this time with `namespace` attribute present on the `Src` element and with value true:

```
<mpeg7s:FragmentUpdateUnit xmlns:mpeg7s="urn:mpeg:mpeg7:systems:2001"
    xmlns:mpeg7="urn:mpeg:mpeg7:schema:2001">
    <mpeg7s:FUCommand>addNode</mpeg7s:FUCommand>
    <mpeg7s:FUContext>
      /mpeg7:Mpeg7/mpeg7:Description/mpeg7:Semantics
    </mpeg7s:FUContext>
    <mpeg7s:FUPayload xmlns="urn:mpeg:mpeg7:schema:2001">
        <Label/>
        <Definition/>
        <MediaOccurence/>
    </mpeg7s:FUPayload>
</mpeg7s:FragmentUpdateUnit>
```

EXAMPLE 6 The following is an example FRU with XML-Pull request (assuming current context is /Mpeg7/Description/Semantics/Label):

```
<FRU xmlns="urn:mpeg:mpegB:schema:FragmentRequestUnits:2007">
    <XMLPull command="follwingSibling"/>
</FRU>
```

EXAMPLE 7 The following is an exmaple FUU as a result from FRU in EXAMPLE 6:

```
<FragmentUpdateUnit xmlns="urn:mpeg:mpeg7:systems:2001"
    xmlns:mpeg7="urn:mpeg:mpeg7:schema:2001">
    <FUCommand>addNode</FUCommand>
    <FUContext>/mpeg7:Mpeg7/mpeg7:Description/mpeg7:Semantics</FUContext>
    <FUPayload>
        <Definition/>
    </FUPayload>
</FragmentUpdateUnit>
```


© ISO/IEC 2008 – All rights reserved
Copyright International Organization for Standardization
Provided by IHS under license with ISO
No reproduction or networking permitted without license from IHS
Not for Resale

EXAMPLE 8 The following is an example FUU as a result from FRU in EXAMPLE 6 using the same context except this time with command=”children”:

```
<FragmentUpdateUnit xmlns="urn:mpeg:mpeg7:systems:2001"
    xmlns:mpeg7="urn:mpeg:mpeg7:schema:2001">
    <FUCommand>addNode</FUCommand>
    <FUContext>/mpeg7:Mpeg7/mpeg7:Description/mpeg7:Semantics</FUContext>
    <FUPayload>
        <Name> Computer</Name>
    </FUPayload>
</FragmentUpdateUnit>
```

© ISO/IEC 2008 – All rights reserved

Copyright International Organization for Standardization
Provided by IHS under license with ISO
No reproduction or networking permitted without license from IHS
Not for Resale

# Annex D
(informative)

# Patent Statements

The International Organization for Standardization and the International Electrotechnical Commission (IEC) draw attention to the fact that it is claimed that compliance with this document may involve the use of patents.

ISO and IEC take no position concerning the evidence, validity and scope of these patent rights.

The holders of these patent rights have assured the ISO and IEC that they are willing to negotiate licences under reasonable and non-discriminatory terms and conditions with applicants throughout the world. In this respect, the statements of the holders of these patents right are registered with ISO and IEC. Information may be obtained from the companies listed below.

Attention is drawn to the possibility that some of the elements of this document may be the subject of patent rights other than those identified in this annex. ISO and IEC shall not be held responsible for identifying any or all such patent rights.

| **Company** |
| --- |
| enikos Pty Ltd |


© ISO/IEC 2008 – All rights reserved
Copyright International Organization for Standardization
Provided by IHS under license with ISO
No reproduction or networking permitted without license from IHS
Not for Resale

# Bibliography

[1] IETF RFC 2616, *Hypertext Transfer Protocol — HTTP/1.1, IETF Request for Comments, June 1999*

[2] W3C DOM, *Document Object Model (DOM) Level 3 Core Specification*, 7 April 2004

[3] W3C SOAP*, SOAP Version 1.2 Part 1: Messaging Framework, W3C Recommendation*, 24 June 2003

[4] ISO/IEC 23001-1, *Information technology — MPEG systems technologies — Part 1: Binary MPEG format for XML*

© ISO/IEC 2008 – All rights reserved

Copyright International Organization for Standardization
Provided by IHS under license with ISO
No reproduction or networking permitted without license from IHS
Not for Resale

**ICS 35.040**

Price based on 21 pages

© ISO/IEC 2008 – All rights reserved
Copyright International Organization for Standardization
Provided by IHS under license with ISO
No reproduction or networking permitted without license from IHS
Not for Resale