INTERNATIONAL STANDARD

ISO/IEC 23000-7

First edition
2008-08-15

Information technology — Multimedia application format (MPEG-A) —

Part 7: Open access application format

Technologies de l'information — Format pour application multimédia (MPEG-A) —

Partie 7: Format pour application d'accès ouvert

Reference number
ISO/IEC 23000-7:2008(E)

© ISO/IEC 2008

--`,,```,,,,````-`-`,,`,,`,`,,`---

Copyright International Organization for Standardization
Provided by IHS under license with ISO
No reproduction or networking permitted without license from IHS

Not for Resale

PDF disclaimer

This PDF file may contain embedded typefaces. In accordance with Adobe's licensing policy, this file may be printed or viewed but shall not be edited unless the typefaces which are embedded are licensed to and installed on the computer performing the editing. In downloading this file, parties accept therein the responsibility of not infringing Adobe's licensing policy. The ISO Central Secretariat accepts no liability in this area.

Adobe is a trademark of Adobe Systems Incorporated.

Details of the software products used to create this PDF file can be found in the General Info relative to the file; the PDF-creation parameters were optimized for printing. Every care has been taken to ensure that the file is suitable for use by ISO member bodies. In the unlikely event that a problem relating to it is found, please inform the Central Secretariat at the address given below.



COPYRIGHT PROTECTED DOCUMENT

© ISO/IEC 2008

All rights reserved. Unless otherwise specified, no part of this publication may be reproduced or utilized in any form or by any means, electronic or mechanical, including photocopying and microfilm, without permission in writing from either ISO at the address below or ISO's member body in the country of the requester.

ISO copyright office
Case postale 56 • CH-1211 Geneva 20
Tel. + 41 22 749 01 11
Fax + 41 22 749 09 47
E-mail copyright@iso.org
Web www.iso.org

Published in Switzerland

Copyright International Organization for Standardization
Provided by IHS under license with ISO
No reproduction or networking permitted without license from IHS

© ISO/IEC 2008 – All rights reserved

Not for Resale

Contents

Page

Foreword iv
Introduction v
1 Scope 1
2 Normative References 1
3 Abbreviated terms 2
4 Namespace conventions 2
5 System overview 3
6 Technical Specification 3
6.1 Introduction 3
6.2 Digital Item Declaration 3
6.3 Identifiers 10
6.4 Metadata 10
6.5 Rights Expressions 13
6.6 Digital Signatures 14
6.7 Event Reporting 14
6.8 File format 22
Annex A (informative) **An example of DID, DII and REL in Open Access** 25
Annex B (informative) **An example of MPEG-7 metadata in Open Access** 28
Annex C (informative) **An example of Event Reporting in Open Access** 30
Annex D (informative) **An example of derivation** 33
Bibliography 36

© ISO/IEC 2008 – All rights reserved

Copyright International Organization for Standardization
Provided by IHS under license with ISO
No reproduction or networking permitted without license from IHS
Not for Resale

Foreword

ISO (the International Organization for Standardization) and IEC (the International Electrotechnical Commission) form the specialized system for worldwide standardization. National bodies that are members of ISO or IEC participate in the development of International Standards through technical committees established by the respective organization to deal with particular fields of technical activity. ISO and IEC technical committees collaborate in fields of mutual interest. Other international organizations, governmental and non-governmental, in liaison with ISO and IEC, also take part in the work. In the field of information technology, ISO and IEC have established a joint technical committee, ISO/IEC JTC 1.

International Standards are drafted in accordance with the rules given in the ISO/IEC Directives, Part 2.

The main task of the joint technical committee is to prepare International Standards. Draft International Standards adopted by the joint technical committee are circulated to national bodies for voting. Publication as an International Standard requires approval by at least 75 % of the national bodies casting a vote.

Attention is drawn to the possibility that some of the elements of this document may be the subject of patent rights. ISO and IEC shall not be held responsible for identifying any or all such patent rights.

ISO/IEC 23000-7 was prepared by Joint Technical Committee ISO/IEC JTC 1, *Information technology*, Subcommittee SC 29, *Coding of audio, picture, multimedia and hypermedia information*.

ISO/IEC 23000 consists of the following parts, under the general title *Information technology — Multimedia application format (MPEG-A)*:

— *Part 1: Purpose for multimedia application formats* [Technical Report]

— *Part 2: MPEG music player application format*

— *Part 3: MPEG photo player application format*

— *Part 4: Musical slide show application format*

— *Part 5: Media streaming application format*

— *Part 7: Open access application format*

— *Part 8: Portable video application format*

— *Part 9: Digital multimedia broadcasting application format*

— *Part 10: Video surveillance application format*

© ISO/IEC 2008 – All rights reserved
Copyright International Organization for Standardization
Provided by IHS under license with ISO
No reproduction or networking permitted without license from IHS
Not for Resale

Introduction

The open access application format is a format to ease the exchange and promotion of open contents. It is designed for the cases where users own rights to a piece of content and have an interest in releasing it in such a way that other users can freely access it. However, the users do not want to make the content public domain. Users want to release a piece of content that is governed in a “light-weight” form. This type of release is called “open access” and the set of technologies that support it is called open access application format.

Examples of open access contents are publicity material and teasers. One important set of major potential applications is represented by the BBC’s Creative Archive project. Another important application is in the scientific area, where publications, research results or e-learning material are published.

Open access is an application format (AF) and is specified as Part 7 of MPEG-A (ISO/IEC 23000-7). The open access AF defines a packaging format that can contain any type of content. Additionally, the AF contains a license for each content, which describes how the content may be used. These licenses are created by the authors of the content, who want to publish their content, but still want to retain some specific rights. The license is in a machine-readable format and helps the consumer to understand, what he is allowed to do with the content. Furthermore it enables the usage of automatic processing and interpretation of these licenses.

The open access AF is a standardized and interoperable solution for the release and exchange of contents. It enables the author of a content to package his creation into a single container and publish it together with a predefined license. It is designed to emphasize the exchange of contents and the re-usage or derivation of the contents by other users.

© ISO/IEC 2008 – All rights reserved

Copyright International Organization for Standardization
Provided by IHS under license with ISO
No reproduction or networking permitted without license from IHS
Not for Resale

Copyright International Organization for Standardization
Provided by IHS under license with ISO
No reproduction or networking permitted without license from IHS
Not for Resale

Information technology — Multimedia application format (MPEG-A) —

Part 7:
Open access application format

1 Scope

This International Standard specifies a container format, which can contain any type of content and can also transport additional metadata. This packaging mechanism offers the possibility to enrich the content with human and machine-readable metadata and is not limited to a specific content type. Unlike other application formats, the open access application format is not a multimedia-based format.

The open access application format doesn't use encryption mechanisms to protect the access of the content. However the content can be protected by digital signatures, which allow the verification of the integrity, authenticity and non-repudiation of the content.

2 Normative References

The following referenced documents are indispensable for the application of this document. For dated references, only the edition cited applies. For undated references, the latest edition of the referenced document (including any amendments) applies.

ISO 3166-1, *Codes for the representation of names of countries and their subdivisions — Part 1: Country codes*

ISO 3166-2, *Codes for the representation of names of countries and their subdivisions — Part 2: Country subdivision code*

ISO/IEC 15938-5, *Information technology — Multimedia content description interface — Part 5: Multimedia description schemes*

ISO/IEC 21000-2, *Information technology — Multimedia framework (MPEG-21) — Part 2: Digital Item Declaration*

ISO/IEC 21000-3, *Information technology — Multimedia framework (MPEG-21) — Part 3: Digital Item Identification*

ISO/IEC 21000-5, *Information technology — Multimedia framework (MPEG-21) — Part 5: Rights Expression Language*

ISO/IEC 21000-9, *Information technology — Multimedia framework (MPEG-21) — Part 9: File Format*

ISO/IEC 21000-15, *Information technology — Multimedia framework (MPEG-21) — Part 15: Event Reporting*

© ISO/IEC 2008 – All rights reserved

Copyright International Organization for Standardization
Provided by IHS under license with ISO
No reproduction or networking permitted without license from IHS
Not for Resale

3 Abbreviated terms

For the purposes of this document, the following abbreviated terms apply.

DI Digital Item

DID Digital Item Declaration

DIDL Digital Item Declaration Language

DII Digital Item Identification

ER Event Report

ER-R Event Report Request

RDD Rights Data Dictionary

REL MPEG-21 Rights Expression Language

AF Application Format

OA Open Access

OAC Open Access Content

URI Uniform Resource Identifier [1]

URL Uniform Resource Locator [1]

XML Extensible Markup Language [2]

4 Namespace conventions

Qualified names are written throughout this part of ISO/IEC 23000 consistently with a namespace prefix followed by a colon followed by the local part of the qualified name. Table 1 contains these prefixes and the corresponding namespace. If not declared otherwise, the default namespace in this document is defined as `urn:mpeg:mpeg21:2002:02-DIDL-NS` and the different prefixes are bound to the namespaces as listed in the table.

Table 1 — Prefixes to Namespaces

Prefix	Namespace
didl	urn:mpeg:mpeg21:2002:02-DIDL-NS
dii	urn:mpeg:mpeg21:2002:01-DII-NS
er	urn:mpeg:mpeg21:2007:01-ERL-OA-NS
m3x	urn:mpeg:mpeg21:2006:01-REL-M3X-NS
m1x	urn:mpeg:mpeg21:2005:01-REL-M1X-NS
mx	urn:mpeg:mpeg21:2003:01-REL-MX-NS
r	urn:mpeg:mpeg21:2003:01-REL-R-NS
sx	urn:mpeg:mpeg21:2003:01-REL-SX-NS
mpeg7	urn:mpeg:mpeg7:schema:2004
xsd	http://www.w3.org/2001/XMLSchema
xsi	http://www.w3.org/2001/XMLSchema-instance
NOTE The prefixes xml and xmlns are normatively defined by *Namespaces in XML (see W3C REC-xml-names-19990114)*. All other prefixes are informative and are used by convention for consistency in this part of ISO/IEC 23000.	

© ISO/IEC 2008 – All rights reserved
Copyright International Organization for Standardization
Provided by IHS under license with ISO
No reproduction or networking permitted without license from IHS
Not for Resale

5 System overview

The Open Access Application Format provides mechanisms for the content consumer as well as the content authors. The author uses the format to release his content with attached Meta-information about his content and the corresponding license. The license can be embedded as a text, which can be presented, when the consumer wants to open, copy or adapt the content. Furthermore, the format helps the author to notify the consumer about the intended way of using the content. These intentions can be expressed with the MPEG-21 REL OAC profile, which consists of several rights and conditions that can be selected by the author. The consumer of the content can be either a particular person or the public. The author can choose which specific rights he wants to grant under certain conditions.

Additionally the author can apply MPEG-21 Event Reports, which can be used as a feedback mechanism. Every time a consumer e.g. opens a released content, the author receives a report, which tells him, that his content was extracted. A similar event can be generated, when a consumer wants to derive a content. Then, the author of the content receives a notification that another user intends to reuse his content. When the author finally releases the file, unique identifiers are assigned to the contents, so that they can be uniquely identified.

The consumer uses the provided meta-information to ease the management of the available contents. As the information is machine-readable, it enables the consumer e.g. to find contents that match given criteria.

6 Technical Specification

6.1 Introduction

The following subclauses list and reference MPEG technologies and describe their purpose for this part of ISO/IEC 23000.

6.2 Digital Item Declaration

This part of ISO/IEC 23000 utilises ISO/IEC 21000-2 to associate content with a set of related information. For the identification of the contents ISO/IEC 21000-3 is used. The following structures are needed from ISO/IEC 21000-2:

- DIDL
- Container
- Item
- Descriptor
- Statement
- Resource
- Component
- Annotation

Annex A gives a full example about the usage of ISO/IEC 21000-2 in Open Access. The following subclauses describe the syntax and semantic of each element of ISO/IEC 2100-2.

© ISO/IEC 2008 – All rights reserved
Copyright International Organization for Standardization
Provided by IHS under license with ISO
No reproduction or networking permitted without license from IHS
Not for Resale

6.2.1 DIDL

6.2.1.1 Syntax

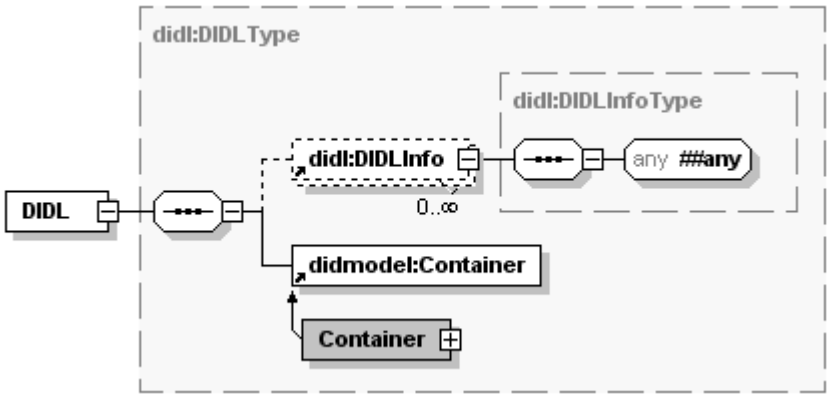

6.2.1.2 Semantic

The DIDL-Element is the root of the xml description and contains a DIDLInfo element and a Container element.

The DIDLInfo element allows specifying information about the DIDL document itself. In Open Access this element is used to embed a digital signature for the whole DIDL document. Other DIDLInfo elements can be ignored. The structure of the digital signature is described in 6.6.

6.2.2 Container

6.2.2.1 Syntax

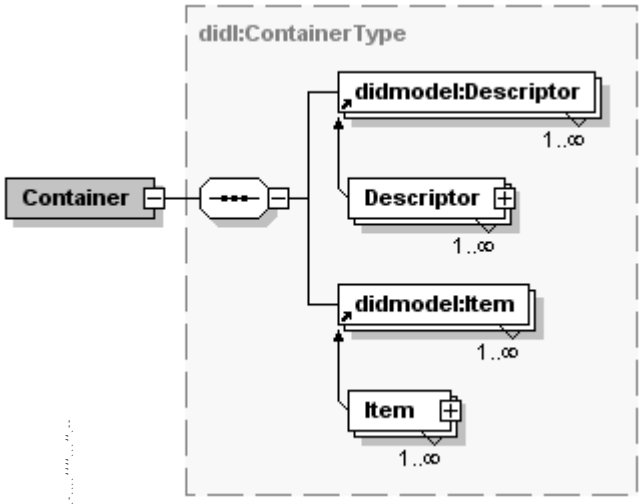

6.2.2.2 Semantic

The Container element is a grouping of Items bound with a set of Descriptors that contain descriptive information about the Container. It may have any attribute from other namespaces that provide an additional representation of a Descriptor. As descriptive information an identifier according to ISO/IEC 21000-3 and metadata as defined in ISO/IEC 15938-5 must be supported.

The identifier declares a unique URI for every container that allows identifying the whole container as a creation from a specific author. Every container must have exactly one identifier. Subclause 6.3 explains the usage of ISO/IEC 21000-3 more detailed.

© ISO/IEC 2008 – All rights reserved
Copyright International Organization for Standardization
Provided by IHS under license with ISO
No reproduction or networking permitted without license from IHS
Not for Resale

The metadata described with ISO/IEC 15938-5 is used to provide information about the author of the container, i.e. the whole package. Every container can have one Descriptor, which contains one or more CreatorType elements. The CreatorType with the corresponding attributes is specified in 6.4.2.

6.2.2.3 Example

The following example shows the usage of the DIDL, Container and Item element.

```
<?xml version="1.0" encoding="UTF-8"?>
<DIDL>
   <Container>
      <Descriptor>
         <Statement mimeType="text/xml">
           <dii:Identifier>...</dii:Identifier>
         </Statement>
      </Descriptor>
      <Descriptor>
         <Statement mimeType="text/xml">
           <mpeg7:Creator>...</mpeg7:Creator>
         </Statement>
      </Descriptor>
      <Item> ... </Item>
      <Item> ... </Item>
      ...
   </Container>
</DIDL>
```

6.2.3 Item

6.2.3.1 Syntax

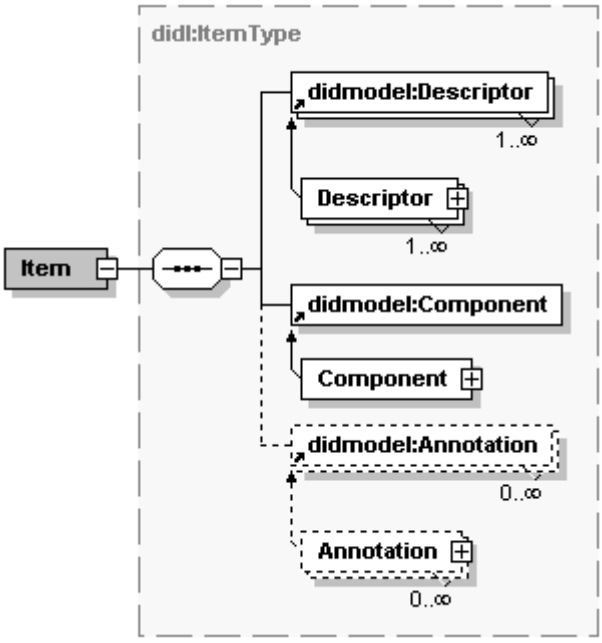

© ISO/IEC 2008 – All rights reserved

Copyright International Organization for Standardization
Provided by IHS under license with ISO
No reproduction or networking permitted without license from IHS
Not for Resale

6.2.3.2 Semantic

The Item element contains the Components and a set of relevant Descriptors and Annotations. The Descriptors provide descriptive information about the Item. A Descriptor containing a plain text description with the mime type “text/plain” must be supported. This Descriptor can be used to provide a descriptive text about the item. Every item can also have one or more attached ERR (Event Report Request) from ISO/IEC 21000-15 in Descriptor elements, which have to be supported. Further details about ERR are explained in 6.6.

An Item may have any attribute from other namespaces. Such attributes provide an additional representation of a Descriptor and contain descriptive information about the Item by means of an attribute.

6.2.3.3 Example

The following example shows the usage of the Item, Descriptors, Components and Annotation elements.

```
<Item>
   <Descriptor>
      <Statement mimeType="text/plain">...</Statement>
   </Descriptor>
   <Descriptor>
      <Statement mimeType="text/xml">
         <er:ERR>...</er:ERR>
      </Statement>
   </Descriptor>
   <Component>...</Component>
   <Annotation>...   </Annotation>
</Item>
```

6.2.4 Descriptor

6.2.4.1 Syntax

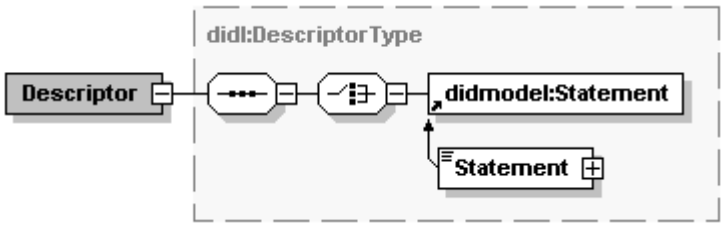

6.2.4.2 Semantic

The Descriptor element is used to associate descriptive data with a parent element. A Descriptor may have any attribute from other namespaces. The Descriptor only may take the form of a Statement.

6.2.5 Statement

6.2.5.1 Syntax

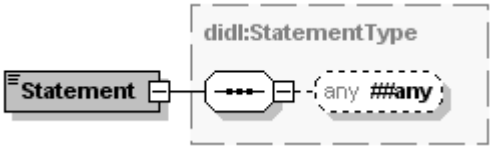

© ISO/IEC 2008 – All rights reserved
Copyright International Organization for Standardization
Provided by IHS under license with ISO
No reproduction or networking permitted without license from IHS
Not for Resale

6.2.5.2 Semantic

The Statement element represents a textual value that contains information, but not an Asset. In general a Statement may contain any data format, including plain text and various machine-readable formats, such as well-formed XML. The data type of the Statement is identified by the MIMETYPE attribute that identifies its data type before any content-encodings specified in the ContentEncoding attribute were applied to the statement.

6.2.6 Component

6.2.6.1 Syntax

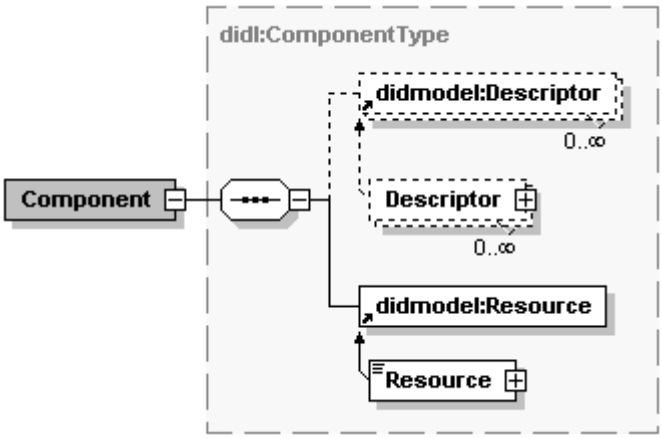

6.2.6.2 Semantic

The Component element groups a Resource element with a set of Descriptors containing descriptive information about the Resource. The Component, being a logical union of a resource with relevant descriptive data, is intended to be the basic building block of digital content within a DIDL document.

The following Descriptors must be supported within the Component:

- Identifier
- RelatedIdentifier
- MPEG-7
- Rights expressions

Every Item must have exactly one Descriptor within the component containing identification information about the item. Several Descriptors can be used to reference to related items. The identification information is based on ISO/IEC 21000-3 and is described in 6.3 more detailed. In 6.4 and 6.5 the MPEG-7 Metadata and the Rights expressions are explained. Both have to be present for each item exactly once.

A Component may have any attribute from other namespaces. Such attributes provide an additional representation of a Descriptor and as such contain descriptive information about the Resource by means of an attribute of the Component.

--`,,```,,,,````-`-`,,`,,`,`,,`---

© ISO/IEC 2008 – All rights reserved

Copyright International Organization for Standardization
Provided by IHS under license with ISO
No reproduction or networking permitted without license from IHS
Not for Resale

6.2.6.3 Example

The following example shows the usage of the Component, Identifier, RelatedIdentifier, MPEG-7 and Rights expressions.

```
<Component>
   <Descriptor>
      <Statement mimeType="text/xml">
         <dii:Identifier>...</dii:Identifier>
      </Statement>
   </Descriptor>
   <Descriptor>
      <Statement mimeType="text/xml">
         <dii:RelatedIdentifier>...</dii:RelatedIdentifier>
      </Statement>
   </Descriptor>
   <Descriptor>
      <Statement mimeType="text/xml">
         <mpeg7:Mpeg7>...</mpeg7:Mpeg7>
      </Statement>
   </Descriptor>
   <Descriptor>
      <Statement mimeType="text/xml">
         <r:license>...</r:license>
      </Statement>
   </Descriptor>
   <Resource>...</Resource>
</Component>
```

6.2.7 Resource

6.2.7.1 Syntax

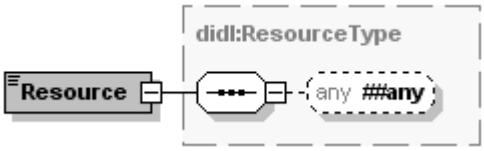

6.2.7.2 Semantic

The Resource element represents an individually identifiable Asset such as a video or audio clip, an image, an electronic ticket, or a textual Asset. Normally, a resource is defined in a Resource element by reference, by specifying the resource's URI in the ref attribute. In Open Access this URI contains the path and the filename of the resource.

The URI is used for referencing contents contained in the mdat box within the file, see 6.8. The URI in the ref attribute shall be identical to the item_name, that is specified in the "infe" box. The URI can be structured hierarchically as described in the following subclause. The data type of the resource can be identified by the MIMETYPE attribute that identifies the data type of the resource.

6.2.7.3 Hierarchical Structure

The URI has the form "#item_name={item_name}", which is according to subclause 8.44.7 URL Forms for meta boxes in ISO/IEC 14496-12: ISO base media file format.

© ISO/IEC 2008 – All rights reserved
Copyright International Organization for Standardization
Provided by IHS under license with ISO
No reproduction or networking permitted without license from IHS
Not for Resale

The {item_name} is a placeholder for the path and the filename of the resource and is identical to the item_name value in the infe Box specified in 6.8.2. The path is a relative path, which uses the "/" character as separators of the folders. The filename contains the name of the file. The set of path and filename has to be unique within each Open Access file.

An Example of this reference is "#item_name=repository/images/florian/mypicture.jpg".

6.2.8 Annotation

6.2.8.1 Syntax

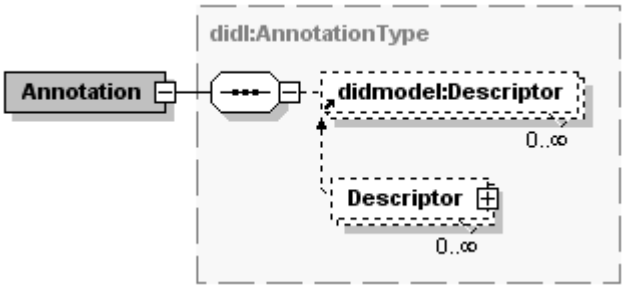

6.2.8.2 Semantic

The Annotation element allows additional Descriptors to be logically added to an element in one or more Item elements without affecting the original contents of the element. The Annotation element is used to specify a related item with the RelatedIdentifier element of ISO/IEC 21000-3.

6.2.8.3 Example

This example demonstrates briefly the usage of the DID in Open Access. A more detailed example is given in Annex A.

```
<DIDL>
  <Container>
    <Descriptor>
      <Statement mimeType="text/xml">
        <dii:Identifier>urn:mpegRA:mpeg21:dii:or:1234</dii:Identifier>
      </Statement>
    </Descriptor>
    <Item>
      <Descriptor>
        <Statement mimeType="text/plain">Released video from Bob</Statement>
      </Descriptor>
      <Component>
        <Resource ref="#item_name=videos/myvideo.mpeg" mimeType="video/mpeg"/>
      </Component>
    </Item>
  </Container>
</DIDL>
```

© ISO/IEC 2008 – All rights reserved

Copyright International Organization for Standardization
Provided by IHS under license with ISO
No reproduction or networking permitted without license from IHS
Not for Resale

6.3 Identifiers

Content is defined as a specific work created by a particular author. The content is uniquely identified by the utilization of ISO/IEC 21000-3. The following elements are defined:

- Identifier
- RelatedIdentifier

For the identification of contents, exactly one Identifier element needs to be attached to each Container and Item element. Thus, every content has its own unique identifier. If an item has the same Identifier as another item, then both items contain the same content from the same author.

The RelatedIdentifier element is used to reference to other items, which are related to the current item. The attribute relationshipType may contain “isAdaptationOf” and “HasAdaptation”.

The relationshipType “isAdaptationOf” specifies that this content is a derivation of the referenced element. It states, that this element is a modification of the referenced item. This relation can be used e.g. to show the attribution to the author of the original content. When a new item is created by adapting an existing content, this information can be added to show the relation between the items.

The relationshipType “HasAdaptation” defines, that the related element is a modified version of this item. This information changes over the time, when a new content is created, that is based on the item. Thus these relations are specified in the Annotation element of the Digital Item Declaration. The information can be collected e.g. by requesting an Event Report on the derivation of an item.

Annex A shows how elements of ISO/IEC 21000-3 are used within a Digital Item Declaration.

6.4 Metadata

The metadata used to describe the content is defined by taking parts of ISO/IEC 15938-5. Metadata is included in Open Access by using an MPEG-7 descriptor in a Statement block within the DIDL of Open Access.

The following information can be provided for describing the content:

- title
- author information
- copyright text
- URI of the license
- license web page
- creation date

The next subclauses describe the syntax and semantic of each element of ISO/IEC 15938-5 within Open Access. It is optional to include any other MPEG-7 Metadata in DID of the Open Access AF, and such inclusion will be application specific.

--`,,```,,,,````-`-`,,`,,`,`,,`---

© ISO/IEC 2008 – All rights reserved
Copyright International Organization for Standardization
Provided by IHS under license with ISO
No reproduction or networking permitted without license from IHS
Not for Resale

6.4.1 MPEG-7

6.4.1.1 Syntax

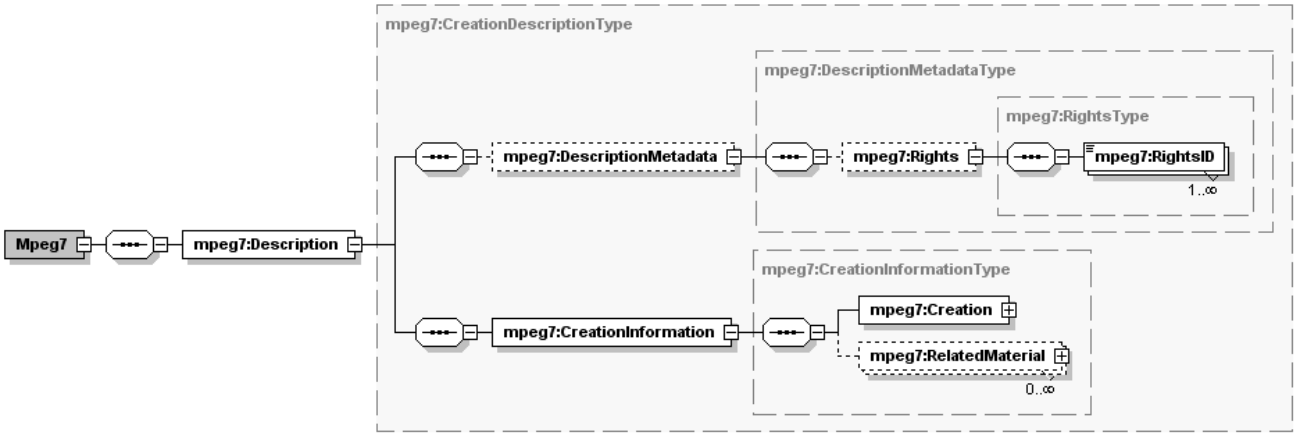

6.4.1.2 Semantic

The Mpeg7 element is the root of the MPEG-7 description. It contains a Description element, which uses the CreationDescriptionType DS as top-level-type. The DescriptionMetadata contains the Rights with the RightsID. The RightsID identifies the link to the current rights information. In Open Access it contains the URI of the license. This URI is a unique identifier of the license, which can be used to unambiguously identify the license of the content. The CreationInformation element comprises the elements Creation and RelatedMaterial for the description of the item.

6.4.2 Creation

6.4.2.1 Syntax

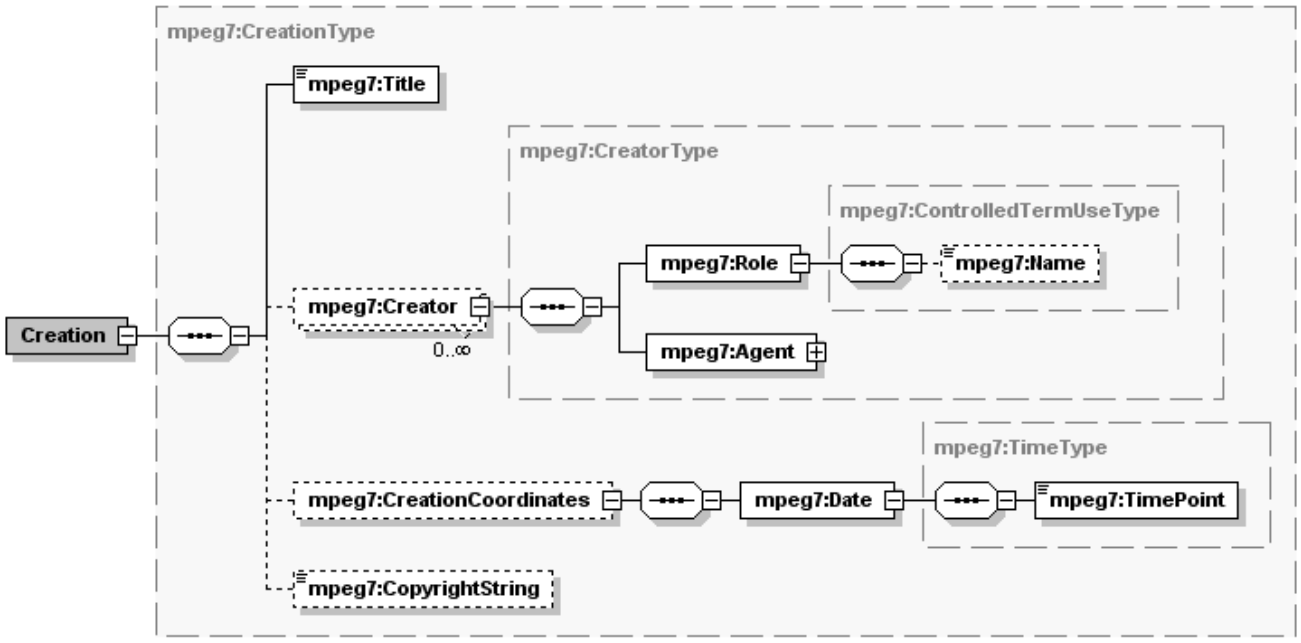

© ISO/IEC 2008 – All rights reserved

Copyright International Organization for Standardization
Provided by IHS under license with ISO
No reproduction or networking permitted without license from IHS
Not for Resale

6.4.2.2 Semantic

The Creation element contains the title of the item. The creator element can be used to specify one or more persons that are the authors of the respective content. The Role element within the Creator element defines the role played in the creation. The attribute href of at least one role element shall be set to "urn:mpeg:mpeg7:cs:RoleCS:2001:AUTHOR" to define that the given person is the author of the content. More detailed information about the author is given in the Agent element. The CreationCoordinates element specifies the creation date of the content. The CopyrightString contains a text that describes the licensing of the content.

6.4.3 Agent

6.4.3.1 Syntax

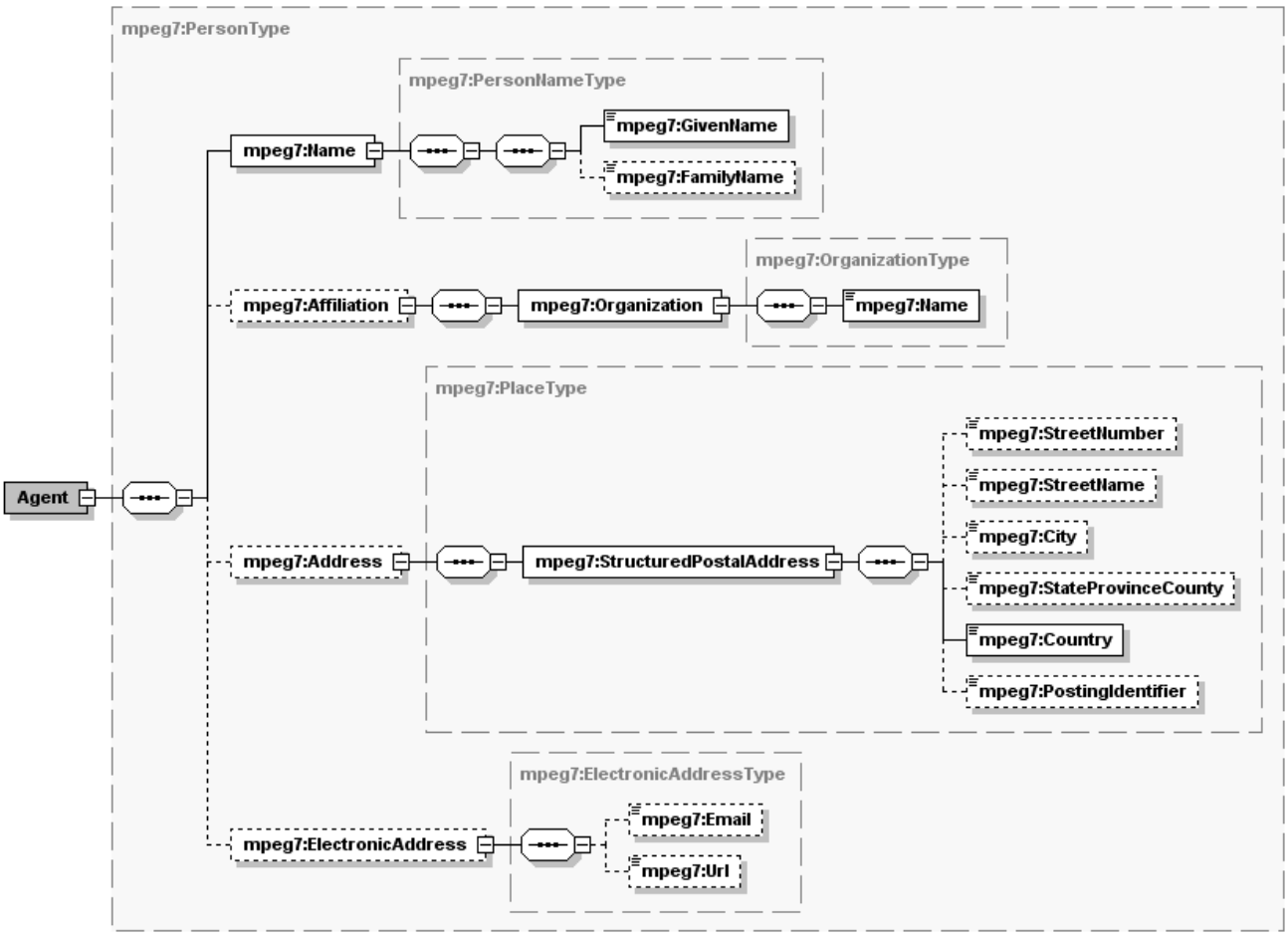

6.4.3.2 Semantic

The Agent element contains detailed information about the author of the content. It uses parts of the PersonDS scheme to describe the person, that created the content. The name of the author can be indicated with the Name element. In addition to the name, also the affiliated organizations and the address of the author can be specified. The ElectronicAddress element contains the e-mail address or a URL e.g. the web page of the author.

© ISO/IEC 2008 – All rights reserved
Copyright International Organization for Standardization
Provided by IHS under license with ISO
No reproduction or networking permitted without license from IHS
Not for Resale

6.4.4 RelatedMaterial

6.4.4.1 Syntax

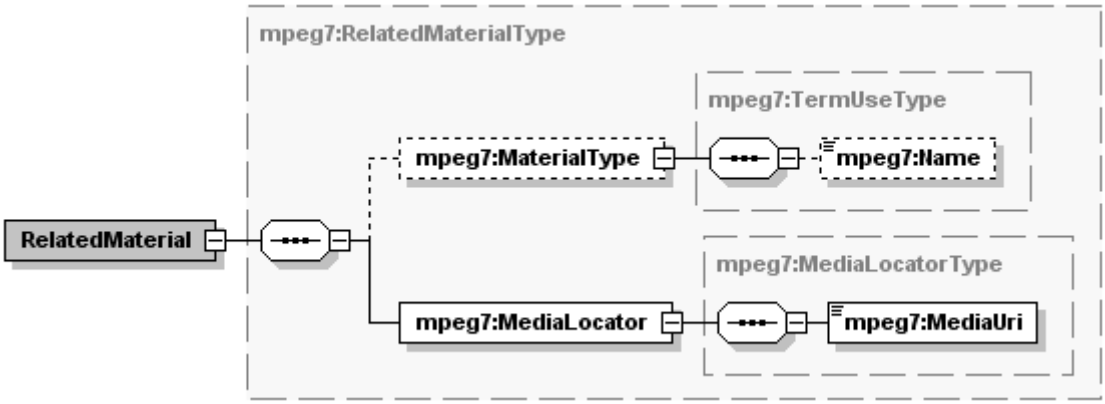

6.4.4.2 Semantic

The RelatedMaterial element contains additional material about the content. It can be used to specify URLs to web pages, which contain more detailed information about the license of the content. The MaterialType element is in a human readable description of the material. Within this standard the MaterialType “license web page” shall be supported and can be used once in every Mpeg7 element. For that type the MediaLocator element contains in the MediaUri element the URL of the license web page.

6.5 Rights Expressions

The Rights Expressions used in Open Access are defined by the ISO/IEC 21000-5/Amd.3 – The OAC (Open Access Content) profile. The MPEG-21 REL OAC Profile adopts a subset of the MPEG-21 REL specification. The Rights Expressions are specified within a license, which will be added as a descriptor to the component as described in 6.2.6. Every Component may have one license, which contains one or more grants that are assigned either only to a specific principal or to the public.

The licenses used in Open Access use the following hierarchy structure:

- license
  - grant (one or more)
    - principal (one and optional)
    - rights (one and mandatory)
    - resource (one and optional)
    - condition (one or more and optional)
  - issuer (one and optional)

The Signature and KeyHolder elements in the profile are used as defined in 6.6. The resource element can be specified with a SecureIndirect and a NonSecureIndirect. If the NonSecureIndirect element is present, it has to be verified, that it contains the same URI as the Resource element in the DID, see 6.2.7. If the two URI's are different, then the item is invalid.

The following rights elements are provided for content consumption:

- play
- print
- execute

© ISO/IEC 2008 – All rights reserved

Copyright International Organization for Standardization
Provided by IHS under license with ISO
No reproduction or networking permitted without license from IHS
Not for Resale

For describing the usage of the content the following rights elements are included:

- adapt
- governedCopy
- governedAdapt

The profile includes the following condition elements:

- allConditions
- territory
- copyrightNotice
- nonCommercialUse
- sourceCode

6.6 Digital Signatures

The digital signature used in Open Access shall be according to the "XML-Signature Syntax and Processing" standard [3]. The signatures are embedded in the DID description and thus enveloped signatures must be supported. The public key is specified in the KeyInfo element, which can be either a RSAKeyValue within the KeyValue or a X509 certificate, which is given in the X509Data element.

6.7 Event Reporting

ISO/IEC 21000-15 is being used in Open Access AF as a means of communication for a feedback channel when an Open Access file is used or derived. Event Reporting can be optionally assigned and used for each item. As the Open Access client is not foreseen to be implemented as a background service, only a subset of the MPEG-21 Event Reporting standard is being supported. The set of supported commands and the differences to ISO/IEC 21000-15 are being defined in the following sections. The default namespace in this clause and subclauses is defined as `urn:mpeg:mpeg21:2007:01-ERL-OA-NS`.

In Open Access, an Event Report shall be sent on the event extract and/or derive. The extract operation occurs, when the following REL rights of 6.5 are exercised:

- play
- print
- execute
- governedCopy

The operation derive is defined as the operation, when one of the following rights of 6.5 is exercised on the resource:

- adapt
- governedAdapt

6.7.1 Event Report Request

The Event Report Request (ER-R) is specified within the DID of Open Access using the ERR element as a root element. It can be specified with a Descriptor and Statement block within an Item. Every Item can have one or more Event Report Requests. The Open Access client reads the ERR and sends an appropriate ER as specified in the ER-R.

--`,,```,,,,````-`-`,,`,,`,`,,`---
© ISO/IEC 2008 – All rights reserved
Copyright International Organization for Standardization
Provided by IHS under license with ISO
No reproduction or networking permitted without license from IHS
Not for Resale

6.7.1.1 Syntax

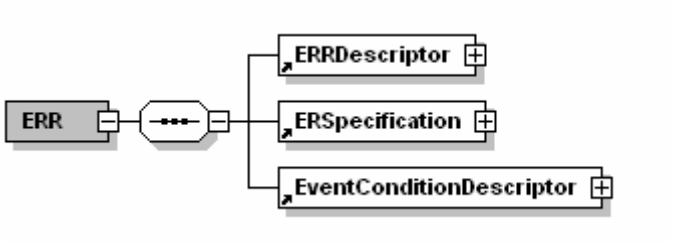

6.7.1.2 Semantics

Name	Definition
ERRDescriptor	General information about the ER-R
ERSpecification	Information about the data to be included in the ER and its delivery method
EventConditionDescriptor	Information on the condition for the event

6.7.1.3 Example

```
<?xml version="1.0" encoding="UTF-8"?>
<ERR>
  <ERRDescriptor>...</ERRDescriptor>
  <ERSpecification>...</ERSpecification>
  <EventConditionDescriptor>...</EventConditionDescriptor>
</ERR>
```

6.7.2 ERRDescriptor

The ERRDescriptor provides general information about the ER-R.

6.7.2.1 Syntax

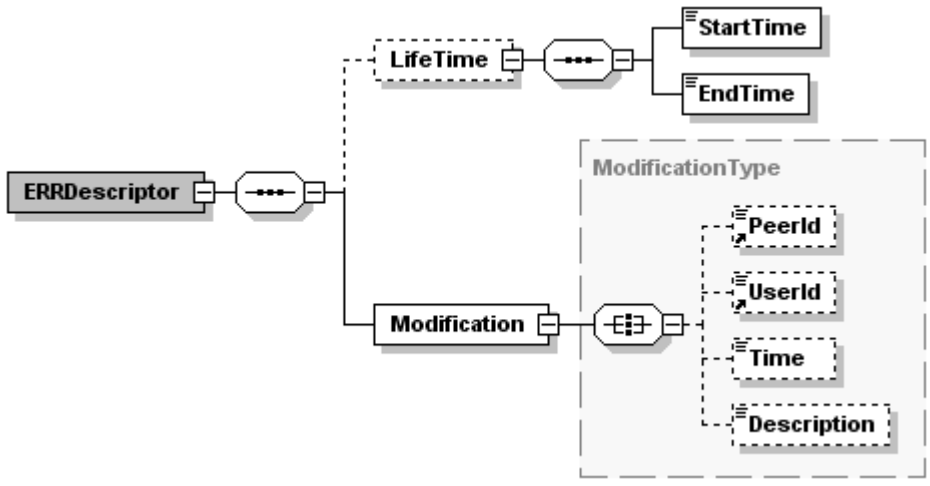

© ISO/IEC 2008 – All rights reserved

Copyright International Organization for Standardization
Provided by IHS under license with ISO
No reproduction or networking permitted without license from IHS
Not for Resale

6.7.2.2 Semantics

Name	Definition
LifeTime	Defines the expected lifetime of the Event Report Request. When absent, the ER-R is assumed to be always valid.
StartTime	Start of the ER-R's lifetime
EndTime	End of the ER-R's lifetime
Modification	Information relating to creation of the Event Report Request
PeerID	Identification of the Peer who has made, created or modified the ER-R
UserID	Identification of the User who has made, created or modified the ER-R
Time	Date and time at which the ER-R was either created or modified
Description	Free field form to describe the creation or the modification

6.7.2.3 Example

The example below indicates that the ER-R is valid between 1 Sep 2006 until 1 Sep 2007.

```
<ERRDescriptor>
    <LifeTime>
      <StartTime>2006-09-01T00:00:00</StartTime>
      <EndTime>2007-09-01T00:00:00</EndTime>
    </LifeTime>
    <Modification>
      <PeerId>GUID:1AC5-4527-A864-3EA2</PeerId>
      <UserId>CISAC:IPI:P-1435 6382</UserId>
      <Time>2004-06-30T18:015:00</Time>
      <Description>Creation reference</Description>
    </Modification>
</ERRDescriptor>
```

6.7.3 ERSpecification

The ERSpecification provides information about the data to be included in the ER and its delivery method.

© ISO/IEC 2008 – All rights reserved
Copyright International Organization for Standardization
Provided by IHS under license with ISO
No reproduction or networking permitted without license from IHS
Not for Resale

6.7.3.1 Syntax

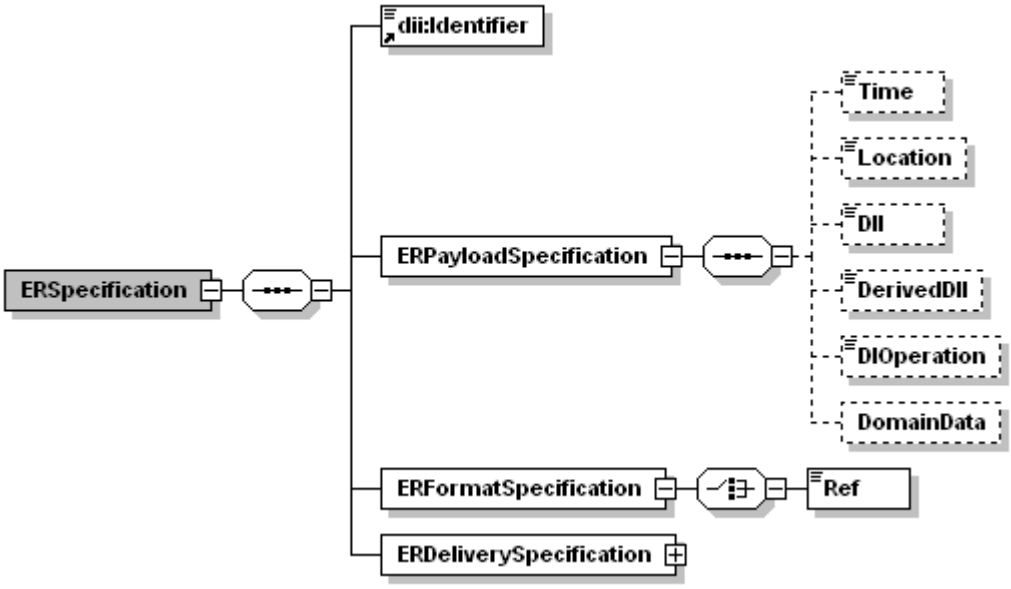

6.7.3.2 Semantics

Name	Definition
Identifier	Digital Item identifier for the ER-R
ERPayloadSpecification	Fields to be reported in the ER
Time	Time of delivery to be reported in ER
Location	2 letter country code as defined in ISO 3166 to be reported in ER
DII	DII of the item on which the Operation was exercised
DerivedDII	DII of the derived item which was used during the operation. This element is used in the case of derivation and specifies that the RelatedDII element in the Event Report shall contain the DII of the derived item.
DIOperation	Operation to be reported in ER
DomainData	Additional information to be reported. The name of the tag in the ER should correspond to the value of the reportTag attribute. Person DS (as defined in 6.4.3, which is based on 7.5.3 of ISO/IEC 15938-5:2003) must be supported to provide user information in the ER. This is described as a DomainData with a semantic attribute of “UserInfo” and a syntax attribute of “PersonDS”. ER should report this information using the corresponding reportTag, with a “PersonType” data type as specified in 6.4.3.
ERFormatSpecification	The report format to be used. This should define a XML format using: `<Ref>xmlns:xsi=http://www.w3.org/2001/XMLSchema-instance</Ref>`

© ISO/IEC 2008 – All rights reserved

Copyright International Organization for Standardization
Provided by IHS under license with ISO
No reproduction or networking permitted without license from IHS
Not for Resale

6.7.3.3 Example

The example below indicates that the ER should include the following fields: name, email, company name, time of ER delivery, location of client, Digital Item Identifier and DI operation. The ER should be formatted as a XML document.

```
<ERSpecification>
  <dii:Identifier>mpeg:mpeg21:dii:ERRID:123456</dii:Identifier>
  <ERPayloadSpecification>
    <Time/><Location/><DII/><DIOperation/>
    <DomainData reportTag="user" semantic="UserInfo" syntax="PersonDS"/>
  </ERPayloadSpecification>
  <ERFormatSpecification>
    <Ref>xmlns:xsi=http://www.w3.org/2001/XMLSchema-instance</Ref>
  </ERFormatSpecification>
  <ERDeliverySpecification>
    ...
  </ERDeliverySpecification>
</ERSpecification>
```

6.7.4 ERDeliverySpecification

The ERDeliverySpecification provides information to the delivery method of the ER.

6.7.4.1 Syntax

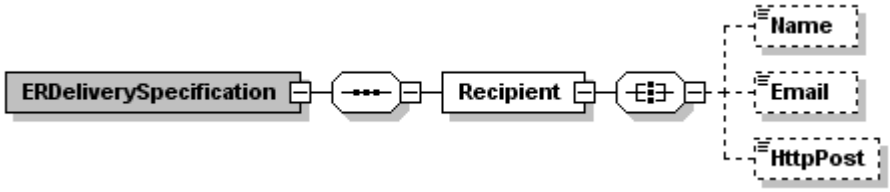

6.7.4.2 Semantics

Name	Definition
Recipient	Specify the recipient of the ER
Name	Name of recipient of ER
Email	Email address of recipient of ER
HttpPost	Http address to send the ER using the http POST method. The content type reported is: *text/xml*

© ISO/IEC 2008 – All rights reserved
Copyright International Organization for Standardization
Provided by IHS under license with ISO
No reproduction or networking permitted without license from IHS
Not for Resale

6.7.4.3 Example

The example below indicates that the ER should be delivered to “John Doe” via his email “john.doe@tum.de”, and via http-post to http://reply.tum.de/process.cgi and https://secure.tum.de/process.cgi.

```
<ERDeliverySpecification>
  <Recipient>
    <Name>John Doe</Name>
    <Email>john.doe@tum.de</Email>
    <HttpPost>http://reply.tum.de/process.cgi</HttpPost>
  </Recipient>
</ERDeliverySpecification>
```

6.7.5 EventConditionDescriptor

The EventConditionDescriptor provides information on the condition on which the ER is sent.

6.7.5.1 Syntax

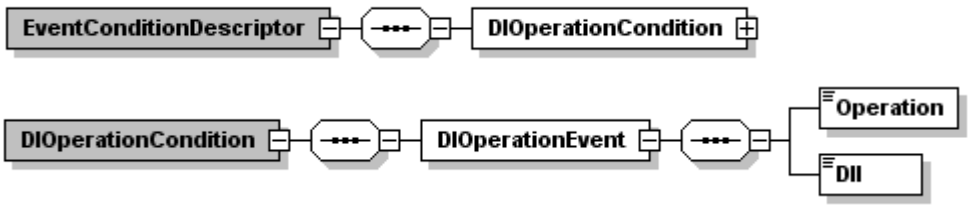

6.7.5.2 Semantics

Name	Definition
DIOperationCondition	Specify the condition to send the ER
Operation	This should be set to *urn:mpeg:mpeg21:er:openaccess:extract* or to *urn:mpeg:mpeg21:er:openaccess:derive*
DII	Digital Item reference of the item on which the operation was exercised. This shall be the same as the value of the Identifier of the Item element based on ISO/IEC 21000-2.

6.7.6 Example

The example below indicates that an ER will be sent when the Digital Item referenced by *urn:mpeg:mpeg21:dii:di:somefile.ppt* is extracted.

```
<EventConditionDescriptor>
  <DIOperationCondition>
    <DIOperationEvent>
      <Operation>urn:mpeg:mpeg21:er:openaccess:extract</Operation>
      <DII>urn:mpeg:mpeg21:dii:di:somefile.ppt</DII>
    </DIOperationEvent>
  </DIOperationCondition>
</EventConditionDescriptor>
```

© ISO/IEC 2008 – All rights reserved

Copyright International Organization for Standardization
Provided by IHS under license with ISO
No reproduction or networking permitted without license from IHS
Not for Resale

6.7.7 Event Report (ER)

The Event Report is a XML document, generated by the Open Access client, in response to the ER-R found in the Open Access file.

6.7.7.1 Syntax

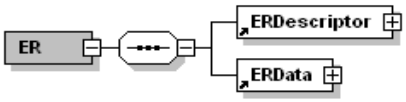

6.7.7.2 Semantics

Name	Definition
ERDescriptor	Provides general information on the ER
ERData	Contains information about the sender of the ER and the event that occurred

6.7.7.3 Example

```
<?xml version="1.0" encoding="UTF-8"?>
<ER>
  <ERDescriptor>...</ERDescriptor>
  <ERData>...</ERData>
</ER>
```

6.7.8 ERDescriptor

The ERDesriptor provides general information on the ER.

6.7.8.1 Syntax

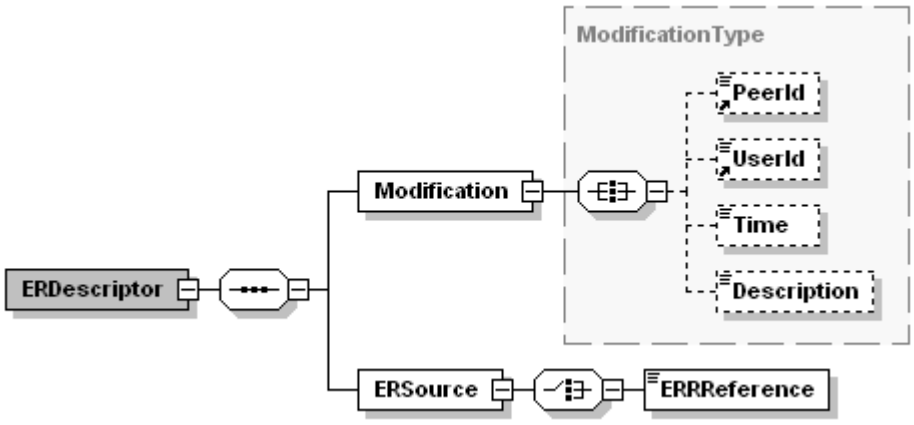

© ISO/IEC 2008 – All rights reserved
Copyright International Organization for Standardization
Provided by IHS under license with ISO
No reproduction or networking permitted without license from IHS
Not for Resale

6.7.8.2 Semantics

Name	Definition
Modification	Contains information about the creation of the ER
PeerID	Identification of the Peer who has created the ER
UserID	Identification of the User who has created the ER
Time	Date and Time at which the ER was created
Description	Free field form to describe the creation
ERSource	Reference to the generating ER-R
ERReference	A reference to the ER-R that was the source of this Event Report

6.7.8.3 Example

```
<ERDescriptor>
  <Modification>
    <PeerId>ORID:A29K9KADUWENM82KH</PeerId>
    <UserId>CISAC:IPI:P-1435 6382</UserId>
    <Time>2004-06-30T18:015:00</Time>
    <Description>Extraction of item</Description>
  </Modification>
  <ERSource>
     <ERReference>mpeg:mpeg21:dii:ERRID:123456</ERReference>
  </ERSource>
</ERDescriptor>
```

6.7.9 ERData

The ERData provides information on the sender of the ER and the Event that occurred. The exact fields that occur in the ERData depend on the fields specified in the ReportData section of the ER-R.

6.7.9.1 Syntax

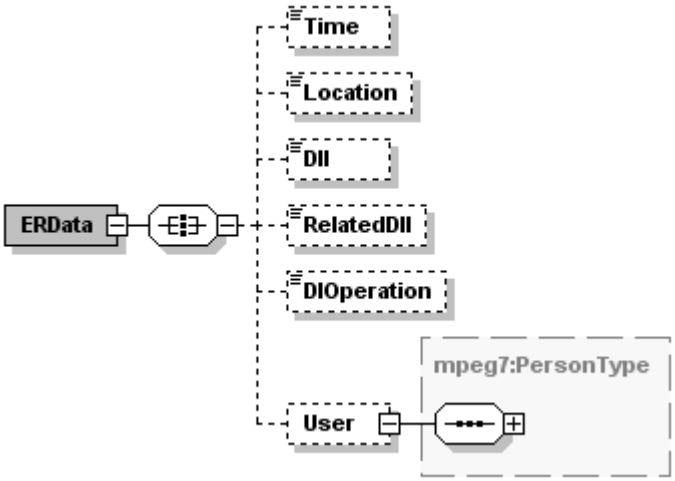

© ISO/IEC 2008 – All rights reserved

Copyright International Organization for Standardization
Provided by IHS under license with ISO
No reproduction or networking permitted without license from IHS
Not for Resale

6.7.9.2 Semantics

Name	Definition
Time	Time when the operation was exercised
Location	2-letter Country Code as defined in ISO 3166 of the country from where the ER is sent
DII	The Digital Item Identifier that was extracted or derived by the Open Access application
RelatedDII	Digital Item Identifier of the derived item in the case of derivation
DIOperation	Digital Item operation which took place. This should be *urn:mpeg:mpeg21:er:openaccess:extract* in the case of an extraction or *urn:mpeg:mpeg21:er:openaccess:derive* in the case of a derivation.
User	User (consumer) information based on MPEG-7 Person DS syntax as specified in 6.4.3

6.7.9.3 Example

The example below indicates that John Smith (with email john.smith@iso.ch) from the company Smith Inc. has extracted the Digital Item *urn:mpeg:mpeg21:dii:di:data.ppt* on 2 Sep 2006 0000H in Germany(DE).

```
<ERData>
  <Time>2006-09-02T00:00:00</Time>
  <Location>DE<Location/>
  <DII>urn:mpeg:mpeg21:dii:di:data.ppt<DII/>
  <DIOperation>urn:mpeg:mpeg21:er:openaccess:extract</DIOperation>
  <User>
    <mpeg7:Name>
      <mpeg7:GivenName>John</mpeg7:GivenName>
      <mpeg7:FamilyName>Smith</mpeg7:FamilyName>
    </mpeg7:Name>
    <mpeg7:Affiliation>
      <mpeg7:Organization>
        <mpeg7:Name>Smith Inc.</mpeg7:Name>
        </mpeg7:Organization>
    </mpeg7:Affiliation>
    <mpeg7:ElectronicAddress>
      <mpeg7:Email>john.smith@iso.ch</mpeg7:Email>
    </mpeg7:ElectronicAddress>
  </User>
</ERData>
```

6.8 File format

6.8.1 Introduction

Open access uses a subset of the features from the MEPG-21 file format. The following subclauses describe the structure and the included definitions of ISO/IEC 21000-9 in Open Access.

© ISO/IEC 2008 – All rights reserved
Copyright International Organization for Standardization
Provided by IHS under license with ISO
No reproduction or networking permitted without license from IHS
Not for Resale

6.8.2 Basic Structure

Open Access uses an object-structured file based on the MPEG-21 file format. It uses boxes as defined in the ISO Base Media File Format. Figure 1 shows the structure of the Open Access file format. The corresponding box parameters are as shown. Mandatory boxes are marked with an asterisk (*).

<table>
<tr><td colspan="4">“ftyp” Box (*)
major-brand = ‘oaff’
compatible-brands = ‘mp21’</td></tr>
<tr><td colspan="4">“meta” Box (*)</td></tr>
<tr><td></td><td colspan="3">“hdlr” Box (*)
handler-type = ‘mp21’</td></tr>
<tr><td></td><td colspan="3">“iinf” Box (*)
entry_count = n</td></tr>
<tr><td></td><td></td><td colspan="2">“infe” Box (*)
itemID = 1 (incremental)
item_protection_index = 0
item_name = “<filename>”
content_type = “<mime type>”
content_encoding = “”</td></tr>
<tr><td></td><td></td><td colspan="2">.
.
n repetitions of “infe” boxes
.
.</td></tr>
<tr><td></td><td colspan="3">“iloc” Box (*)
offset_size = {4,8}
length_size = {4,8}
base_offset_size = 0
data-reference-index = 0</td></tr>
<tr><td></td><td></td><td colspan="2">itemID = 1 (incremental)
extent_count = 1
extent_offset = X
extent_length = Y
.
.
n repetitions
.</td></tr>
<tr><td></td><td colspan="3">“xml ” Box (*)(#)
xml_text = MPEG-21 DID document</td></tr>
<tr><td colspan="4">“mdat” Box (*)
data : byte[]</td></tr>
</table>

Figure 1 — Open access file format

© ISO/IEC 2008 – All rights reserved

Copyright International Organization for Standardization
Provided by IHS under license with ISO
No reproduction or networking permitted without license from IHS
Not for Resale

6.8.3 Definitions

Box Type	Definition
ftyp	This box indicates the file type. The given parameters indicate that this is an Open Access file which is compatible with the MPEG-21 file format
meta	Metadata box
hdlr	This box indicates that the “meta” box contains MPEG-21 metadata
iinf	This box is a container for “infe” boxes and contains a total count of the number of “infe” boxes it contains
infe	These boxes provide specific information on the items stored in the Open Access file. The item_name field specifies the path and the filename of the item, which is referenced in the URI specified in the Ref attribute of the Resource element from the DID. The structure of this reference is specified in 6.2.7.3.
iloc	This box is a database of the offsets and sizes of each item stored in the Open Access file. It corresponds to the “infe” box with the same ItemID
xml	This box contains a single DID which describes the items in the file, including all MPEG-21 REL licences, MPEG-7 metadata and ER-Rs.
mdat	This box contains continuous binary data of the included files concatenated together. The specific starting offset and length of each individual file is specified in the “iloc” box

6.8.4 XML Box

The XML box should have a character encoding of UTF-8. The XML Box contains a single DID document containing the specification of MPEG-7 Metadata, REL and Event Reports.

© ISO/IEC 2008 – All rights reserved
Copyright International Organization for Standardization
Provided by IHS under license with ISO
No reproduction or networking permitted without license from IHS
Not for Resale

Annex A
(informative)

An example of DID, DII and REL in Open Access

The following example shows the usage of DID, DII and REL in Open Access. The following information is represented:

- The container has the identifier “urn:mpegRA:mpeg21:dii:oa:1110” and contains one Item.
- The author of the file is Bob Brown.
- The Item is declared as “Photo of Bob” with the identifier “urn:mpegRA:mpeg21:dii:oa:1111”.
- The content was derived of the item with the identifier “urn:mpegRA:mpeg21:dii:oa:0010”.
- The title of the image is “My Photo1”.
- The REL License doesn’t allow commercial use and modification of the item.
- It is annotated, that the item with the identifier “urn:mpegRA:mpeg21:dii:oa:5500” is an adapted version of this item.

```
<?xml version="1.0"?>
<DIDL xmlns="urn:mpeg:mpeg21:2002:02-DIDL-NS" xmlns:dii="urn:mpeg:mpeg21:2002:01-DII-NS"
xmlns:xsi="http://www.w3.org/2001/XMLSchema-instance"
xsi:schemaLocation="urn:mpeg:mpeg21:2002:02-DIDL-NS didl-oa-v1.xsd">
   <Container>
        <Descriptor>
            <Statement mimeType="text/xml">
                <!-- Identifier of the OA-File -->
                <dii:Identifier>urn:mpegRA:mpeg21:dii:oa:1110</dii:Identifier>
            </Statement>
        </Descriptor>
        <Descriptor>
            <Statement mimeType="text/xml">
                <Creator xmlns="urn:mpeg:mpeg7:schema:2004"
xsi:schemaLocation="urn:mpeg:mpeg7:schema:2004 mpeg7-oa-v1.xsd">
                    <Role href="urn:mpeg:mpeg7:cs:RoleCS:2001:AUTHOR"/>
                    <Agent>
                        <Name>
                            <GivenName>Bob</GivenName>
                            <FamilyName>Brown</FamilyName>
                        </Name>
                    </Agent>
                </Creator>
            </Statement>
        </Descriptor>
        <Item id="content_01">
            <Descriptor>
                <Statement mimeType="text/plain">Photo of Bob</Statement>
            </Descriptor>
            <Component id="comp_01">
                <Descriptor>
                    <Statement mimeType="text/xml">
                        <!-- Identifier of the Content_ 01 -->
                        <dii:Identifier>urn:mpegRA:mpeg21:dii:oa:1111</dii:Identifier>
                    </Statement>
                </Descriptor>
                <Descriptor>
```

© ISO/IEC 2008 – All rights reserved

Copyright International Organization for Standardization
Provided by IHS under license with ISO
No reproduction or networking permitted without license from IHS
Not for Resale

```
                    <Statement mimeType="text/xml">
                        <!-- Related Identifier to the original content-->
                        <dii:RelatedIdentifier relationshipType="urn:mpeg:mpeg21:2002:01-RDD-
NS:IsAdaptationOf">urn:mpegRA:mpeg21:dii:oa:0010</dii:RelatedIdentifier>
                    </Statement>
                </Descriptor>
                <Descriptor>
                    <Statement mimeType="text/xml">
                        <Mpeg7 xmlns="urn:mpeg:mpeg7:schema:2004">
                            <Description>
                                <CreationInformation>
                                    <Creation>
                                        <Title>My Photo1</Title>
                                    </Creation>
                                </CreationInformation>
                            </Description>
                        </Mpeg7>
                    </Statement>
                </Descriptor>
                <Descriptor>
                    <Statement mimeType="text/xml">
                        <!--The following license doesn't allow the commercial use and modification of the
item. -->
                        <license xmlns="urn:mpeg:mpeg21:2003:01-REL-R-NS"
xmlns:sx="urn:mpeg:mpeg21:2003:01-REL-SX-NS" xmlns:mx="urn:mpeg:mpeg21:2003:01-REL-MX-NS"
xmlns:m1x="urn:mpeg:mpeg21:2005:01-REL-M1X-NS" xmlns:m3x="urn:mpeg:mpeg21:2006:01-REL-M3X-
NS" xmlns:enc="http://www.w3.org/2001/04/xmlenc#" xmlns:dsig="http://www.w3.org/2000/09/xmldsig#"
xmlns:xsi="http://www.w3.org/2001/XMLSchema-instance"
xsi:schemaLocation="urn:mpeg:mpeg21:2006:01-REL-M3X-NS rel-m3x-oac-v1.xsd">
                            <grant>
                                <mx:play/>
                                <digitalResource licensePartId="di_1">
                                    <nonSecureIndirect URI="urn:mpegRA:mpeg21:dii:oa:1111"/>
                                </digitalResource>
                                <allConditions>
                                    <m3x:copyrightNotice>
                                        <m3x:copyrightString>Written by Bob, AAA Company, 2007.1.1
</m3x:copyrightString>
                                    </m3x:copyrightNotice>
                                    <m3x:nonCommercialUse/>
                                </allConditions>
                            </grant>
                            <grant>
                                <m1x:governedCopy/>
                                <digitalResource licensePartIdRef="di_1"/>
                                <allConditions>
                                    <m3x:copyrightNotice>
                                        <m3x:copyrightString>Written by Bob, AAA Company, 2007.1.1
</m3x:copyrightString>
                                    </m3x:copyrightNotice>
                                    <m3x:nonCommercialUse/>
                                </allConditions>
                            </grant>
                            <issuer>
                                <keyHolder>
                                    <info>
                                        <dsig:KeyName>Rights Issuer Public Key
Name</dsig:KeyName>
                                    </info>
                                </keyHolder>
```


-`,,`,,`,,

```
                                    </issuer>
                                </license>
                            </Statement>
                        </Descriptor>
                        <Resource ref="#item_name=myFirstPicture.jpg" mimeType="image/jpeg"/>
                    </Component>
                    <Annotation target="#comp_01">
                        <Descriptor>
                            <Statement mimeType="text/xml">
                                <!-- Related Identifiers, which adapted this content. -->
                                <dii:RelatedIdentifier relationshipType="urn:mpeg:mpeg21:2002:01-RDD-
NS:HasAdaptation">urn:mpegRA:mpeg21:dii:oa:5500</dii:RelatedIdentifier>
                            </Statement>
                        </Descriptor>
                    </Annotation>
                </Item>
            </Container>
</DIDL>
```

© ISO/IEC 2008 – All rights reserved
Copyright International Organization for Standardization
Provided by IHS under license with ISO
No reproduction or networking permitted without license from IHS
Not for Resale

Annex B
(informative)

An example of MPEG-7 metadata in Open Access

The following diagram shows an example of a single item described with MPEG-7. The following information is represented:

- The author, John Smith, created an item named “My Photo1”.
- He is from the organization “Smith Inc.” in Munich, Germany.
- His email address is “john.smith@ldv.ei.tum.de” and the URL to his web page is “http://www.ldv.ei.tum.de/jsmith/”
- The creation of the content was on 10-3-1998 14:13.
- The content is licensed under a Creative Commons license, with a licensing information page at http://creativecommons.org/licenses/by-nc-nd/3.0/

```
<?xml version="1.0" encoding="UTF-8"?>
<Mpeg7 xmlns="urn:mpeg:mpeg7:schema:2004" xmlns:xsi="http://www.w3.org/2001/XMLSchema-instance"
xsi:schemaLocation="urn:mpeg:mpeg7:schema:2004 mpeg7-oa-v1.xsd">
   <Description>
      <DescriptionMetadata>
         <Rights>
            <RightsID>http://creativecommons.org/licenses/by-nc-nd/3.0/</RightsID>
         </Rights>
      </DescriptionMetadata>
      <CreationInformation>
         <Creation>
            <Title>My Photo1</Title>
            <Creator>
               <Role href="urn:mpeg:mpeg7:cs:RoleCS:2001:AUTHOR"/>
               <Agent xsi:type="PersonType">
                  <Name>
                     <GivenName>John</GivenName>
                     <FamilyName>Smith</FamilyName>
                  </Name>
                  <Affiliation>
                     <Organization>
                        <Name>Smith Inc.</Name>
                     </Organization>
                  </Affiliation>
                  <Address>
                     <StructuredPostalAddress>
                        <StreetNumber>21</StreetNumber>
                        <StreetName>Arcisstrasse</StreetName>
                        <City>Munich</City>
                        <Country>de</Country>
                        <PostingIdentifier>80290</PostingIdentifier>
                     </StructuredPostalAddress>
                  </Address>
                  <ElectronicAddress>
                     <Email>john.smith@ldv.ei.tum.de </Email>
                     <Url>http://www.ldv.ei.tum.de/jsmith/</Url>
                  </ElectronicAddress>
               </Agent>
```


© ISO/IEC 2008 – All rights reserved
Copyright International Organization for Standardization
Provided by IHS under license with ISO
No reproduction or networking permitted without license from IHS
Not for Resale

```
                    </Creator>
                    <CreationCoordinates>
                        <Date>
                            <TimePoint>1998-10-03T14:13+01:00</TimePoint>
                        </Date>
                    </CreationCoordinates>
                    <CopyrightString>This work is licensed under the Creative Commons Attribution Non-commercial No Derivatives (by-nc-nd) License. To view a copy of this license, visit http://creativecommons.org/licenses/by-nc-nd/3.0/.</CopyrightString>
                </Creation>
                <RelatedMaterial>
                    <MaterialType>
                        <Name>license web page</Name>
                    </MaterialType>
                    <MediaLocator>
                        <MediaUri>http://creativecommons.org/licenses/by-nc-nd/3.0/</MediaUri>
                    </MediaLocator>
                </RelatedMaterial>
            </CreationInformation>
    </Description>
</Mpeg7>
```

© ISO/IEC 2008 – All rights reserved

Copyright International Organization for Standardization
Provided by IHS under license with ISO
No reproduction or networking permitted without license from IHS
Not for Resale

Annex C
(informative)

An example of Event Reporting in Open Access

This Annex contains two examples, which show the usage of Event Reporting. The following Event Report Request is included in the item, which will be released. This information is represented in the request:

- The Event Report Request (ER-R) is valid from 1st Jan 2007 till 31st of Dec 2009
- The ER-R was created on 30th Oct 2006 18:15, on the computer(peer) with ID `OAID:1AC54527A864`, and by the user with ID `CISAC:IPI:P-1432 7342`
- The DII of the ER-R itself is `mpeg:mpeg21:dii:ERRID:123456`
- The associated Event Report (ER) is to report the time, location, DII, operation performed and user particulars of the content consumer.
- The target recipient of the ER is John Doe
- It will be sent using HTTP post to `http://reply.tum.de/process.cgi` and via E-Mail to `john.doe@tum.de`.
- Condition for sending ER:
    - When the Digital Item Identifier `urn:mpeg:mpeg21:dii:di:mpeg.ppt` is extracted from the Open Access file.

```
<?xml version="1.0"?>
<ERR xmlns="urn:mpeg:mpeg21:2007:01-ERL-OA-NS" xmlns:dii="urn:mpeg:mpeg21:2002:01-DII-NS"
xmlns:xsi="http://www.w3.org/2001/XMLSchema-instance"
xsi:schemaLocation="urn:mpeg:mpeg21:2007:01-ERL-OA-NS er-oa-v1.xsd">
  <ERRDescriptor>
    <LifeTime>
      <StartTime>2007-01-01T00:00:00</StartTime>
      <EndTime>2009-12-31T23:59:59</EndTime>
    </LifeTime>
    <Modification>
      <PeerId>OAID:1AC54527A864</PeerId>
      <UserId>CISAC:IPI:P-4132 7342</UserId>
      <Time>2006-10-30T18:15:00</Time>
      <Description>Creation reference</Description>
    </Modification>
  </ERRDescriptor>
  <ERSpecification>
    <dii:Identifier>mpeg:mpeg21:dii:ERRID:123456</dii:Identifier>
    <ERPayloadSpecification>
      <Time/>
      <Location/>
      <DII/>
      <DIOperation/>
      <DomainData reportTag="user" semantics="UserInfo" syntax="PersonDS"/>
    </ERPayloadSpecification>
    <ERFormatSpecification>
      <Ref>xmlns:xsi=http://www.w3.org/2001/XMLSchema-instance</Ref>
    </ERFormatSpecification>
    <ERDeliverySpecification>
```


© ISO/IEC 2008 – All rights reserved
Copyright International Organization for Standardization
Provided by IHS under license with ISO
No reproduction or networking permitted without license from IHS
Not for Resale

```
            <Recipient>
                <Name>John Doe</Name>
                <Email>john.doe@tum.de</Email>
                <HttpPost>http://reply.tum.de/process.cgi</HttpPost>
            </Recipient>
        </ERDeliverySpecification>
    </ERSpecification>
    <EventConditionDescriptor>
        <DIOperationCondition>
            <DIOperationEvent>
                <Operation>urn:mpeg:mpeg21:er:openaccess:extract</Operation>
                <DII>urn:mpeg:mpeg21:dii:di:mpeg.ppt</DII>
            </DIOperationEvent>
        </DIOperationCondition>
    </EventConditionDescriptor>
</ERR>
```

The Event Report below is a response to the Event Report Request above performed by the user.

- The Event Report is created on `16th Jan 2007 12pm`
- It was sent on the computer (peer) identified by OAID:23HKK8AHZN56782ANS and the user with ID identified by `SMITHCOMPANY:ID:JOHN.SMITH`
- The originating Event Report Request is identified by the DII `mpeg:mpeg21:dii:ERRID:123456`
- The content consumer who sent the Event Report is:
    - Name: John, Smith
    - Company: Smith Inc.
    - Email address: `john.smith@iso.ch`
- The Event Report was sent on `16th Jan 2007 12pm` from Germany(DE).
- The content extracted is identified by the DII `urn:mpeg:mpeg21:dii:di:mpeg.ppt`

© ISO/IEC 2008 – All rights reserved

Copyright International Organization for Standardization
Provided by IHS under license with ISO
No reproduction or networking permitted without license from IHS
Not for Resale

```
<?xml version="1.0"?>
<ER xmlns="urn:mpeg:mpeg21:2007:01-ERL-OA-NS" xmlns:dii="urn:mpeg:mpeg21:2002:01-DII-NS"
xmlns:mpeg7="urn:mpeg:mpeg7:schema:2004" xmlns:xsi="http://www.w3.org/2001/XMLSchema-instance"
xsi:schemaLocation="urn:mpeg:mpeg21:2007:01-ERL-OA-NS er-oa-v1.xsd">
   <ERDescriptor>
      <Modification>
         <PeerId>OAID:23HKK8AHZN56782ANS</PeerId>
         <UserId>SMITHCOMPANY:ID:JOHN.SMITH</UserId>
         <Time>2007-01-16T12:00:00</Time>
         <Description>Creation reference</Description>
      </Modification>
      <ERSource>
         <ERRReference>mpeg:mpeg21:dii:ERRID:123456</ERRReference>
      </ERSource>
   </ERDescriptor>
   <ERData>
      <User>
         <mpeg7:Name>
            <mpeg7:GivenName>John</mpeg7:GivenName>
            <mpeg7:FamilyName>Smith</mpeg7:FamilyName>
         </mpeg7:Name>
         <mpeg7:Affiliation>
            <mpeg7:Organization>
               <mpeg7:Name>Smith Inc.</mpeg7:Name>
            </mpeg7:Organization>
         </mpeg7:Affiliation>
         <mpeg7:ElectronicAddress>
            <mpeg7:Email>john.smith@iso.ch</mpeg7:Email>
         </mpeg7:ElectronicAddress>
      </User>
      <Time>2007-01-16T12:00:00</Time>
      <Location>de</Location>
      <DII>urn:mpeg:mpeg21:dii:di:mpeg.ppt</DII>
      <DIOperation>urn:mpeg:mpeg21:er:openaccess:extract</DIOperation>
   </ERData>
</ER>
```


--`,,```,,,,````-`-`,,`,,`,`,,`---
© ISO/IEC 2008 – All rights reserved
Copyright International Organization for Standardization
Provided by IHS under license with ISO
No reproduction or networking permitted without license from IHS
Not for Resale

Annex D
(informative)

An example of derivation

This Annex presents a use case in which an author wants to license her song with a license, and release this song as an MP3. The author permits other users to create derivative works, but they have to credit her and license their creations under identical terms as stated by her.

The following presents an item with the original work and the corresponding license according to the terms described above.

```
<?xml version="1.0"?>
<Item xmlns="urn:mpeg:mpeg21:2002:02-DIDL-NS" xmlns:dii="urn:mpeg:mpeg21:2002:01-DII-NS"
xmlns:r="urn:mpeg:mpeg21:2003:01-REL-R-NS"
xmlns:mx="urn:mpeg:mpeg21:2003:01-REL-MX-NS" xmlns:m1x="urn:mpeg:mpeg21:2005:01-REL-M1X-
NS"
xmlns:m3x="urn:mpeg:mpeg21:2006:01-REL-M3X-NS" xmlns:xsi="http://www.w3.org/2001/XMLSchema-
instance" xsi:schemaLocation="urn:mpeg:mpeg21:2002:02-DIDL-NS didl-oa-v1.xsd">
        <Descriptor>
            <Statement mimeType="text/plain">My song</Statement>
        </Descriptor>
        <Component>
            <Descriptor>
                <Statement mimeType="text/xml">
                    <dii:Identifier>urn:mpegRA:mpeg21:dii:T-034.524.680-1</dii:Identifier>
                </Statement>
            </Descriptor>
            <Descriptor>
                 <Statement mimeType="text/xml">
                <Mpeg7 xmlns="urn:mpeg:mpeg7:schema:2004"
xsi:schemaLocation="urn:mpeg:mpeg7:schema:2004 mpeg7-oa-v1.xsd">
                    <Description>
                        <CreationInformation>
                            <Creation>
                                <Title>Song 1</Title>
                                <CopyrightString>Copyright 2007, Anita Music</CopyrightString>
                            </Creation>
                        </CreationInformation>
                    </Description>
                </Mpeg7>
            </Statement>
            </Descriptor>
            <Descriptor>
                <Statement mimeType="text/xml">
                    <r:license>
                        <r:grant>
                            <mx:play/>
                            <r:digitalResource licensePartId="my_song">
                                <r:nonSecureIndirect URI="myFirstSong.mp3"/>
                            </r:digitalResource>
                             <m3x:copyrightNotice>
                                <m3x:copyrightString>Anita Music, 2007</m3x:copyrightString>
                            </m3x:copyrightNotice>
                        </r:grant>
```

© ISO/IEC 2008 – All rights reserved

Copyright International Organization for Standardization
Provided by IHS under license with ISO
No reproduction or networking permitted without license from IHS
Not for Resale

```
                        <r:grant>
                            <m1x:governedCopy/>
                            <r:digitalResource licensePartIdRef="my_song"/>
                            <m3x:copyrightNotice>
                                <m3x:copyrightString>Anita Music, 2007</m3x:copyrightString>
                            </m3x:copyrightNotice>
                        </r:grant>
                        <r:grant>
                            <m3x:governedAdapt/>
                            <r:digitalResource licensePartIdRef="my_song"/>
                            <m3x:copyrightNotice>
                                <m3x:copyrightString>Anita Music, 2007</m3x:copyrightString>
                            </m3x:copyrightNotice>
                        </r:grant>
                    </r:license>
                </Statement>
            </Descriptor>
            <Resource mimeType="audio/mpeg" ref="myFirstSong.mp3"/>
        </Component>
</Item>
```

The following figure presents a digital item with a resource derived from the original one and licensed according to the terms stated by the creator of the original work.

```
<?xml version="1.0"?>
<Item xmlns="urn:mpeg:mpeg21:2002:02-DIDL-NS" xmlns:dii="urn:mpeg:mpeg21:2002:01-DII-NS"
xmlns:r="urn:mpeg:mpeg21:2003:01-REL-R-NS"
xmlns:mx="urn:mpeg:mpeg21:2003:01-REL-MX-NS" xmlns:m1x="urn:mpeg:mpeg21:2005:01-REL-M1X-
NS" xmlns:m3x="urn:mpeg:mpeg21:2006:01-REL-M3X-NS"
xmlns:xsi="http://www.w3.org/2001/XMLSchema-instance"
xsi:schemaLocation="urn:mpeg:mpeg21:2002:02-DIDL-NS didl-oa-v1.xsd">
        <Descriptor>
            <Statement mimeType="text/plain">My new song</Statement>
        </Descriptor>
        <Component>
            <Descriptor>
                <Statement mimeType="text/xml">
                    <dii:Identifier>urn:mpegRA:mpeg21:dii:10.1000/123456789</dii:Identifier>
                </Statement>
            </Descriptor>
            <Descriptor>
                <Statement mimeType="text/xml">
                    <Mpeg7 xmlns="urn:mpeg:mpeg7:schema:2004"
xsi:schemaLocation="urn:mpeg:mpeg7:schema:2004 mpeg7-oa-v1.xsd">
                        <Description>
                            <CreationInformation>
                                <Creation>
                                    <Title>Song 2</Title>
                                    <CopyrightString>Copyright 2007, Anita Music</CopyrightString>
                                </Creation>
                            </CreationInformation>
                        </Description>
                    </Mpeg7>
                </Statement>
            </Descriptor>
            <Descriptor>
                <Statement mimeType="text/xml">
```


© ISO/IEC 2008 – All rights reserved
Copyright International Organization for Standardization
Provided by IHS under license with ISO
No reproduction or networking permitted without license from IHS
Not for Resale

```
                    <dii:RelatedIdentifier relationshipType="urn:mpeg:mpeg21:2002:01-RDD-
NS:IsAdaptationOf">urn:mpegRA:mpeg21:dii:T-034.524.680-1</dii:RelatedIdentifier>
                </Statement>
            </Descriptor>
            <Descriptor>
                <Statement mimeType="text/xml">
                    <r:license>
                        <r:grant>
                            <mx:play/>
                            <r:digitalResource licensePartId="my_song">
                                <r:nonSecureIndirect URI="myFirstSongDerived.mp3"/>
                            </r:digitalResource>
                            <m3x:copyrightNotice>
                                <m3x:copyrightString>Anita Music, 2007</m3x:copyrightString>
                            </m3x:copyrightNotice>
                        </r:grant>
                        <r:grant>
                            <m1x:governedCopy/>
                            <r:digitalResource licensePartIdRef="my_song"/>
                            <m3x:copyrightNotice>
                                <m3x:copyrightString>Anita Music, 2007</m3x:copyrightString>
                            </m3x:copyrightNotice>
                        </r:grant>
                        <r:grant>
                            <m3x:governedAdapt/>
                            <r:digitalResource licensePartIdRef="my_song"/>
                            <m3x:copyrightNotice>
                                <m3x:copyrightString>Anita Music, 2007</m3x:copyrightString>
                            </m3x:copyrightNotice>
                        </r:grant>
                    </r:license>
                </Statement>
            </Descriptor>
            <Resource mimeType="audio/mpeg" ref="myFirstSongDerived.mp3"/>
        </Component>
</Item>
```

© ISO/IEC 2008 – All rights reserved

Copyright International Organization for Standardization
Provided by IHS under license with ISO
No reproduction or networking permitted without license from IHS
Not for Resale

Bibliography

[1] IETF RFC 3986 http://www.ietf.org/rfc/rfc3986.txt

[2] “Extensible Markup Language” http://www.w3.org/XML/

[3] “XML-Signature Syntax and Processing” — W3C Recommendation 12 February 2002, http://www.w3.org/TR/xmldsig-core/

[4] “XML SchemaXML Schema Part 1: Structures Second Edition W3C Recommendation 28 October 2004”, http://www.w3.org/2001/XMLSchema

[5] The Open Access website: http://oa.ldv.ei.tum.de

© ISO/IEC 2008 – All rights reserved
Copyright International Organization for Standardization
Provided by IHS under license with ISO
No reproduction or networking permitted without license from IHS
Not for Resale

Copyright International Organization for Standardization
Provided by IHS under license with ISO
No reproduction or networking permitted without license from IHS
Not for Resale

ICS 35.040

Price based on 36 pages

© ISO/IEC 2008 – All rights reserved
Copyright International Organization for Standardization
Provided by IHS under license with ISO
No reproduction or networking permitted without license from IHS
Not for Resale