INTERNATIONAL STANDARD

ISO/IEC 23000-6

First edition
2009-04-15

Information technology — Multimedia application format (MPEG-A) —

Part 6: Professionnal archival application format

Technologies de l'information — Format pour application multimédia (MPEG-A) —

Partie 6: Format pour application d'archivage professionnel

Reference number
ISO/IEC 23000-6:2009(E)

© ISO/IEC 2009

Provided by IHS under license with ISO

Copyright International Organization for Standardization
Not for Resale

PDF disclaimer

This PDF file may contain embedded typefaces. In accordance with Adobe's licensing policy, this file may be printed or viewed but shall not be edited unless the typefaces which are embedded are licensed to and installed on the computer performing the editing. In downloading this file, parties accept therein the responsibility of not infringing Adobe's licensing policy. The ISO Central Secretariat accepts no liability in this area.

Adobe is a trademark of Adobe Systems Incorporated.

Details of the software products used to create this PDF file can be found in the General Info relative to the file; the PDF-creation parameters were optimized for printing. Every care has been taken to ensure that the file is suitable for use by ISO member bodies. In the unlikely event that a problem relating to it is found, please inform the Central Secretariat at the address given below.



COPYRIGHT PROTECTED DOCUMENT

© ISO/IEC 2009

All rights reserved. Unless otherwise specified, no part of this publication may be reproduced or utilized in any form or by any means, electronic or mechanical, including photocopying and microfilm, without permission in writing from either ISO at the address below or ISO's member body in the country of the requester.

ISO copyright office
Case postale 56 • CH-1211 Geneva 20
Tel. + 41 22 749 01 11
Fax + 41 22 749 09 47
E-mail copyright@iso.org
Web www.iso.org

Published in Switzerland

--`,,```,,,,````-`-`,,`,,`,`,,`---

Provided by IHS under license with ISO © ISO/IEC 2009 – All rights reserved
Copyright International Organization for Standardization
Not for Resale

Contents

Page

Foreword iv
Introduction v
1 Scope 1
2 Normative references 1
3 Terms and definitions 2
4 PA-AF Overview 3
5 Normative Components of PA-AF File 4
6 Archive Structure Information 6
6.1 Overview 6
6.2 MPEG-21 DIDL 2nd Edition Profile for PA-AF 7
6.3 File Attribute Model 8
6.4 Relative File Location Reference 10
7 Context Information 11
7.1 Overview 11
7.2 MPEG-7 Multimedia Description Scheme Profile for PA-AF 11
7.3 Application Specific Context Information 20
8 Pre-processing Information 20
8.1 Overview 20
8.2 Identification of Pre-processing Tool 21
8.3 On the Use of contentEncoding Attribute of DIDL and MPEG-21 IPMP Components Base Profile for PA-AF 21
8.4 MPEG-21 IPMP Components Base Profile for PA-AF 22
8.5 Content Usage Governance Description 22
9 File Format for PA-AF 22
9.1 Overview 22
9.2 Restrictions on MPEG-21 File Format for PA-AF 22
9.3 Restrictions on Item Name in IINF Box and URI Value in Reference Attribute 23
9.4 File Brands 24
10 Conformance Points 24
Annex A (normative) **XML Schema Definition of Preservation Description Information** 25
Annex B (normative) **Extracting Files from a PA-AF File** 85
Annex C (informative) **Recommendation for Mime Type and Pre-Processing Tool Identification** 86
Annex D (informative) **XML Instance Examples for Preservation Description Information** 88
Annex E (informative) **Example of File Format Structures for PA-AF** 109
Annex F (informative) **Showcase: Use of Relative URI in Archived Webpage Files** 112
Annex G (informative) **Showcase: Archiving Files into Several PA-AF Files** 114
Bibliography 116

No reproduction or networking permitted without license from IHS

© ISO/IEC 2009 – All rights reserved
Provided by IHS under license with ISO

Copyright International Organization for Standardization
Not for Resale

Foreword

ISO (the International Organization for Standardization) and IEC (the International Electrotechnical Commission) form the specialized system for worldwide standardization. National bodies that are members of ISO or IEC participate in the development of International Standards through technical committees established by the respective organization to deal with particular fields of technical activity. ISO and IEC technical committees collaborate in fields of mutual interest. Other international organizations, governmental and non-governmental, in liaison with ISO and IEC, also take part in the work. In the field of information technology, ISO and IEC have established a joint technical committee, ISO/IEC JTC 1.

International Standards are drafted in accordance with the rules given in the ISO/IEC Directives, Part 2.

The main task of the joint technical committee is to prepare International Standards. Draft International Standards adopted by the joint technical committee are circulated to national bodies for voting. Publication as an International Standard requires approval by at least 75 % of the national bodies casting a vote.

Attention is drawn to the possibility that some of the elements of this document may be the subject of patent rights. ISO and IEC shall not be held responsible for identifying any or all such patent rights.

ISO/IEC 23000-6 was prepared by Joint Technical Committee ISO/IEC JTC 1, *Information technology*, Subcommittee SC 29, *Coding of audio, picture, multimedia and hypermedia information*.

ISO/IEC 23000 consists of the following parts, under the general title *Information technology — Multimedia application format (MPEG-A)*:

— *Part 1: Purpose for multimedia application formats* [Technical Report]

— *Part 2: MPEG music player application format*

— *Part 3: MPEG photo player application format*

— *Part 4: Musical slide show application format*

— *Part 5: Media streaming application format*

— *Part 6: Professional archival application format*

— *Part 7: Open access application format*

— *Part 8: Portable video application format*

— *Part 9: Digital Multimedia Broadcasting application format*

— *Part 10: Video surveillance application format*

— *Part 11: Stereoscopic video application format*

Provided by IHS under license with ISO © ISO/IEC 2009 – All rights reserved
Copyright International Organization for Standardization
Not for Resale

Introduction

The advance of digital multimedia technology has made the creation of digital multimedia content easier. This has resulted in an abundance of digital multimedia contents available for user consumption. It also necessitates ways to manage those digital multimedia contents. Digital multimedia contents should be well-handled and well-preserved in content archives so that part of or all of the contents aggregation can be reused for creation of new contents.

For preserving digital multimedia contents in an archive, one has to provide a packaging mechanism together with preservation technologies for data protection, data integrity, and data compression. In addition, the consumption of the archive can continue long after it has been created; therefore, the context information that describes the context of the archive and digital multimedia contents in it should also be contained in the package. This necessary context information may include information that can answer who, what, where, when, and why questions about the archive and the digital multimedia contents archived in it.

This part of ISO/IEC 23000 is an MPEG standard that specifies component technologies and their integration for digital multimedia content archive. ISO/IEC 23000 (also known as “MPEG-A”), is an MPEG standard defined by selecting readily tested and verified tools taken from the MPEG body of standards and combining them to form a AF (Multimedia Application Format). If a needed piece of technology is not provided within the MPEG, additional technologies originating from other organizations can be included by reference in order to facilitate the envisioned application format. For digital multimedia content archives, MPEG has designated this part of ISO/IEC 23000 “*Part 6: Professional archival application format.*” In other parts of this International Standard, the term “Professional Archival Application Format (PA-AF)” refers to this part of ISO/IEC 23000.

© ISO/IEC 2009 – All rights reserved
Provided by IHS under license with ISO
Copyright International Organization for Standardization
Not for Resale

Provided by IHS under license with ISO

Copyright International Organization for Standardization
Not for Resale

Information technology — Multimedia application format (MPEG-A) —

Part 6:
Professionnal archival application format

1 Scope

This part of ISO/IEC 23000 specifes the professional archival application format (PA-AF). The purpose of the PA-AF is to provide a standardized packaging format for digital files. This packaging format can also serve as an implementation of the information package specified by the reference model of the open archival information system (OAIS). The OAIS reference model is a framework for understanding and applying concepts necessary for long-term digital information preservation (where “long-term” is long enough to be concerned about changing technologies). In addition, PA-AF can also be used as an intermediate or exchange packaging format for any kind of multimedia content.

While a general archival process may include processes starting from creation, to delivery to archival system, and dissemination to consumers, PA-AF is limited in scope as follows. PA-AF does not specify how input content is created. PA-AF does not specify any agreement of how the content should be handled and delivered to the archiving process. PA-AF assumes that input content for the archiving process is available in an appropriate digital format. PA-AF specifies the format of a digital archive produced by the archival process. PA-AF does not specify how the archive output by the archival process is disseminated to end-users.

PA-AF specifies a metadata format to describe the original structure of digital files archived in a PA-AF file. PA-AF specifies a metadata format to describe context information related to a PA-AF file and digital files archived in it. PA-AF specifies a metadata format to describe necessary information to reverse the pre-processing processes applied to digital files prior to archiving them in a PA-AF file. PA-AF specifies a file format for carriage of the metadata formats and digital files.

2 Normative references

The following referenced documents are indispensable for the application of this document. For dated references, only the edition cited applies. For undated references, the latest edition of the referenced document (including any amendments) applies.

ISO 14721:2003, *Space data and information transfer systems — Open archival information system — Reference mode*

ISO/IEC 14496-3, *Information technology — Coding of audio-visual objects — Part 3: Audio*

ISO/IEC 14496-12:2008, *Information technology — Coding of audio-visual objects — Part 12: ISO base media file format (technically identical with ISO/IEC 15444-12)*

ISO/IEC 14496-14:2003, *Information technology — Coding of audio-visual objects — Part 14: MP4 file format*

ISO/IEC 21000-2:2005, *Information technology — Multimedia framework (MPEG-21) — Part 2: Digital Item Declaration*

© ISO/IEC 2009 – All rights reserved
Provided by IHS under license with ISO
Copyright International Organization for Standardization
Not for Resale

ISO/IEC 21000-3:2003, *Information technology — Multimedia framework (MPEG-21) — Part 3: Digital Item Identification*

ISO/IEC 21000-4:2006, *Information technology — Multimedia framework (MPEG-21) — Part 4: Intellectual Property Management and Protection Components*

ISO/IEC 21000-5:2004, *Information technology — Multimedia framework (MPEG-21) — Part 5: Rights Expression Language*

ISO/IEC 21000-9:2005, *Information technology — Multimedia framework (MPEG-21) — Part 9: File Format*

ISO/IEC 21000-14:2007, *Information technology — Multimedia framework (MPEG-21) — Part 14: Conformance Testing*

IETF RFC 1738, *Uniform Resource Locators (URL), IETF Request for Comments: 1738*, December 1994

IETF RFC 1808, *Relative Uniform Resource Locators, IETF Request for Comments: 1808*, June 1995

IETF RFC 3629, *UTF-8, a transformation format of ISO 10646, IETF Request for Comments: 3629,* November 2003

IETF RFC 3986, *Uniform Resource Identifier (URI): Generic Syntax, IETF Request for Comments: 3986*, January 2005

W3C XINCLUDE, *XML Inclusions (Xinclude) Version 1.0, W3C Recommendation*, 15 November 2006

W3C XML, *Extensible Markup Language (XML) 1.0 (Fourth Edition), W3C Recommendation, 16 August 2006*

W3C XML C14N, *Cannonical XML Version 1.0, W3C Recommendation*, 15 March 2001

W3C XML NAMES, *Namespaces in XML 1.0, W3C Recommendation*, 16 August 2006

W3C XML SCHEMA, *XML Schema 1.1 Part 1: Structures (Second Edition), W3C Recommendation,* 28 October 2004

W3C XML SCHEMA, *XML Schema 1.1 Part 2: Datatypes (Second Edition), W3C Recommendation,* 28 October 2004

3 Terms and definitions

For the purposes of this document, the terms and definitions given in ISO 14721:2003, ISO/IEC 14496-3, ISO/IEC 14496-12:2008, ISO/IEC 14496-14:2003, ISO/IEC 21000-2:2005, ISO/IEC 21000-3:2003, ISO/IEC 21000-4:2006, ISO/IEC 21000-5:2004, ISO/IEC 21000-9:2005, ISO/IEC 21000-14:2007 and the following apply.

3.1
application-specific context information
context information whose semantics are not defined in the general PA-AF specification but may be used in specific application domains

3.2
archive structure information
information that describes structural relationships among **content information**

3.3
content information
file or fragment of file that is archived in a **PA-AF file**

Provided by IHS under license with ISO © ISO/IEC 2009 – All rights reserved
Copyright International Organization for Standardization
Not for Resale

3.4
context information
information that describes the context of a **PA-AF file** and **content information** stored in it

3.5
file attribute
information that preserves attributes attached to an input file by the file system before it is archived in a **PA-AF file**

3.6
information package
package containing the file(s) being archived and associated descriptioin information needed to aid in the preservation of the archived file(s) in a specific file format

3.7
professional archival application format file
PA-AF file
archive whose format complies with the PA-AF specification

3.8
pre-processing tools
software or software module used for processing before a file is archived in a **PA-AF file**

NOTE Pre-processing tools include tools for lossless data compression, encryption, governance checking, and integrity checking.

3.9
pre-processing information
information carried in a **PA-AF file** describing tool(s) and other settings required to reverse pre-processing action(s) applied to **content information**

3.10
preservation description information
information describing **content information** stored in a **PA-AF file**

NOTE It consists of archive structure information, context information, and pre-processing information.

4 PA-AF Overview

PA-AF archives digital files in a PA-AF file. In addition to containing digital files being archived, a PA-AF file also contains information for the preservation of the archived digital files. While implementation of a packaging tool that complies with PA-AF is out of the scope of this specification, Figure 1 outlines an informative packaging tool that may produce an output file that complies with a PA-AF file. The tool consists of the following modules:

— file structure information generator, which analyzes and generate meta information to model hierarchical structure of the input files;
— context information generator, which creates meta information to record context information related to the output PA-AF file and input files to be archived;
— pre-processing information generator, which creates meta information for required tools and their execution parameters to reverse any pre-processing processes applied to the input files;
— archive header wrapper, which combines all the generated meta information into PA-AF file header;
— file formatter, which takes the header and input files (original or after pre-processed) and wraps them in a file.

No reproduction or networking permitted without license from IHS

© ISO/IEC 2009 – All rights reserved
Provided by IHS under license with ISO

Copyright International Organization for Standardization
Not for Resale

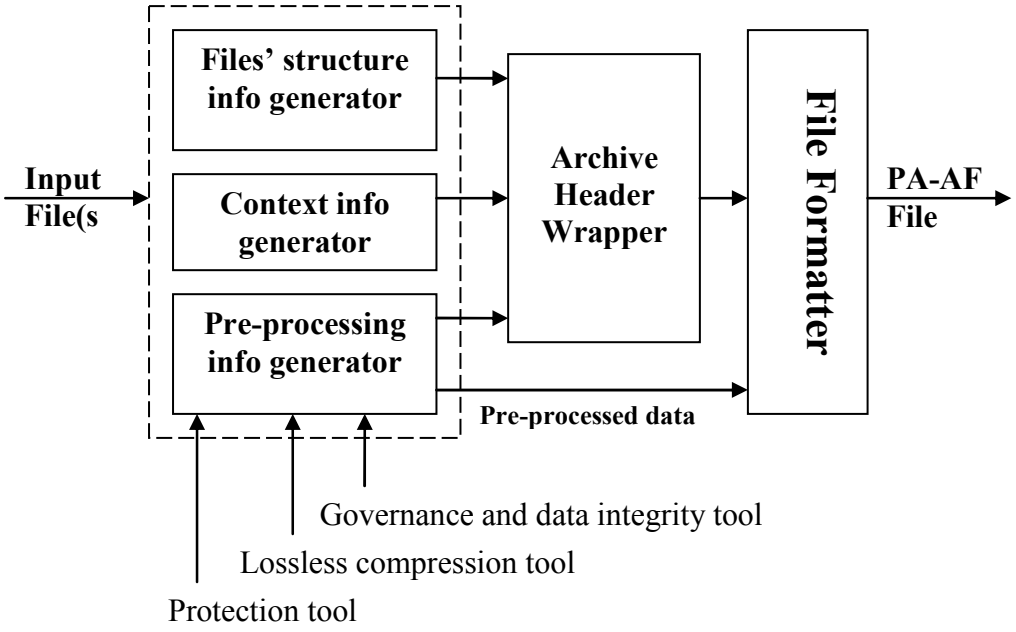

Figure 1 — Overview of a PA-AF packaging tool for creating a PA-AF file

5 Normative Components of PA-AF File

A PA-AF file consists of header and content part as illustrated in Figure 2. The header part contains information, called Preservation Description Information, needed to understand the PA-AF file itself and all files archived in it. The content part contains one or more archived files. These archived files are called Content Information.

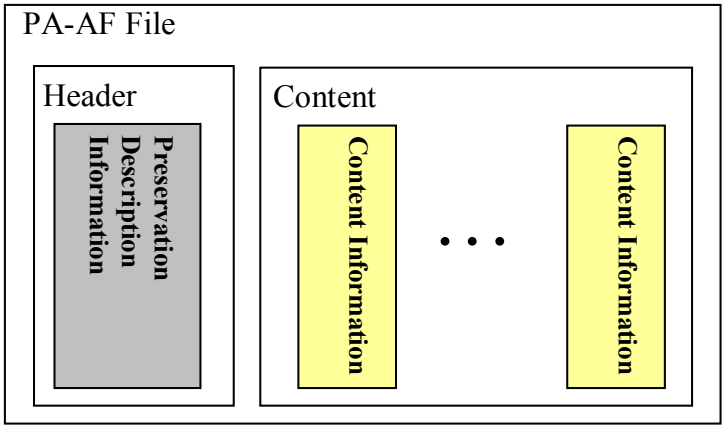

Figure 2 — Logical view of a PA-AF file

Content Information includes digital data in its original format as input into the PA-AF file and/or in the format after pre-processed with pre-processing tools allowed by this specification. The categories of pre-processing tool are lossless data compression, reversible data protection such as encryptions, and removable data attached to the content for usage governance and data integrity, such as checksums, and digital licenses.

Preservation Description Information is in XML metadata format and shall comply with W3C recommendations related to XML. It includes Archive Structure Information, Context Information, and Pre-processing Information.

--`,,```,,,,````-`-`,,`,,`,`,,`---
Provided by IHS under license with ISO © ISO/IEC 2009 – All rights reserved
Copyright International Organization for Standardization
Not for Resale

Archive Structure Information describes structural relationships among Content Information. Figure 3 illustrates the importance of Archive Structure Information. While the original structure of digital files input into a PA-AF file can be hierarchical in one or more directories, in a physical PA-AF file format, they are stored in flat manner. Archive Structure Information preserves the original hierarchical structure of the input digital files. When Content Information is extracted from the PA-AF file, the structure of output digital files is as it was input into the PA-AF. Archive Structure Information also acts as an entry point to access Context Information and Pre-processing Information in the Content Information.

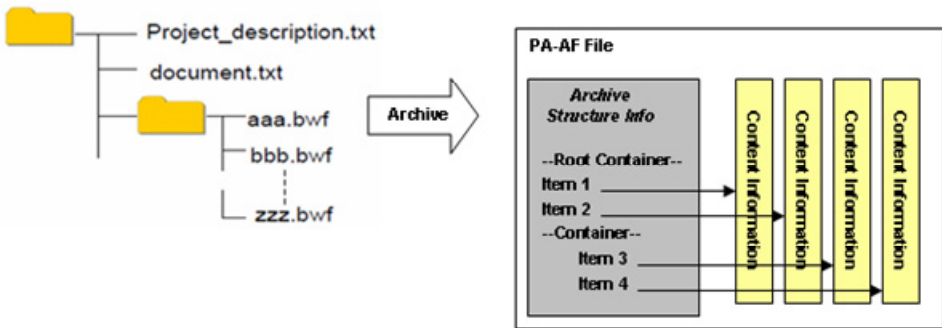

Figure 3 — Usage of Archive Structure Information

Context Information describes context information attached to a PA-AF file and Content Information.

It includes:

— creation information of the PA-AF file and content Information, such as information about what, how, when, where, who, and why;

— profile information of the Content Information, such as the file format, file size, audio and visual profile of the content (if it is an audio visual data);

— access history to the Content Information, which records any actions applied to the Content Information, such as archiving and extraction; this record may include who the actor is and when the action is performed;

— application specific context information.

An application domain that adopts PA-AF specification could add additional information to describe Content Information in the PA-AF file to satisfy its specific requirements by means of application specific context information. Figure 4 illustrates how PA-AF accommodates such a mechanism. Application- specific context information can be manifested in any meta information format and archived in a PA-AF file as Content Information. PA-AF provides a link to refer to this application-specific context information so that an application that can understand this information can read and use it.

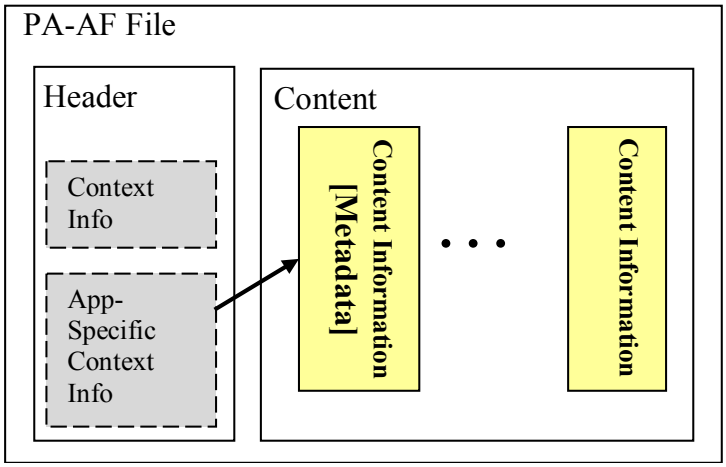

Figure 4 — Application-specific context information in a PA-AF file

© ISO/IEC 2009 – All rights reserved
Copyright International Organization for Standardization
Not for Resale
Provided by IHS under license with ISO

Pre-processing Information describes profile of tools that can be used to reverse pre-processing applied to Content Information. It contains information, such as identification of the tool, required parameters to execute the tool, and part of Content Information pre-processed with that tool, and where to acquire the tool.

Required components technologies to meet normative components of PA-AF are as follows:

— MPEG-21 DIDL 2nd Edition Profile for PA-AF
— ISO/IEC 21000-3:2003
— MPEG-21 Intellectual Property Management and Protection Components Base Profile for PA-AF
— ISO/IEC 21000-5:2004/Amd.1:2007
— MPEG-7 Multimedia Descrption Scheme Profile for PA-AF
— MPEG-21 File Format for PA-AF
— Lossless compression tool identifiers
— Encryption, hash, and digital signature identifiers
— Additional metadata dedicated for use in PA-AF only

The component technologies listed above can be used in combination to fulfil basic functionality and enhanced functionality of PA-AF as illustrated by Figure 5. The enhanced functionality is optional and implemented on top of the basic functionality. For example, the combination of ISO/IEC 21000-9:2005, MPEG-21 DIDL 2nd Edition Profile for PA-AF, ISO/IEC 21000-3:2003, and MPEG-7 Creation Information Tool of ISO/IEC 15938-5:2003 provides solutions to satisfy the basic functionality of PA-AF which is packaging Content Information in a PA-AF file. By adding MPEG-21 Intellectual Property Management and Protection Components Base Profile for PA-AF, one can add functionality, such as compression, protection, and integrity checking to the PA-AF. By adding ISO/IEC 21000-5:2004/Amd.1:2007, one can add license information to govern the usage of the PA-AF file. Finally, by adding MPEG-7 Multimedia Descrption Scheme Profile for PA-AF, one can have interoperable description of Content Information that can be exploited to implement functionality for interoperable content searching. The combination of all component technologies provides a full solution for PA-AF.

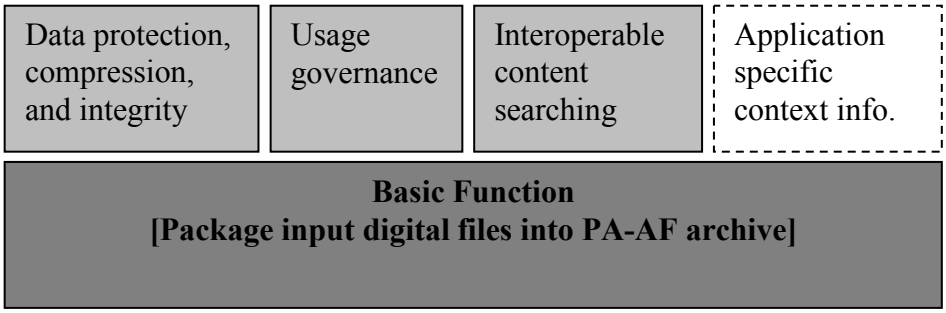

Figure 5 — Basic and enhanced functionality of PA-AF

6 Archive Structure Information

6.1 Overview

Archive Structure Information consists of a file structure model and file attribute model. The file structure model provides a description to preserve the original structure of input files to be archived, whereas the file attribute model provide a description to preserve the original description given by the file system to the file, such as file access information, system timestamp, etc. 6.2 provides explains the file structure model and explains the file attribute model.

Provided by IHS under license with ISO © ISO/IEC 2009 – All rights reserved
Copyright International Organization for Standardization
Not for Resale

6.2 MPEG-21 DIDL 2nd Edition Profile for PA-AF

MPEG-21 DIDL 2nd Edition Profile for PA-AF is a subset of ISO/IEC 21000-2:2005, with restrictions, and two additional attributes. The profile is designed to provide the following functionalities:

— modeling of original structure of input files for archive creation;
— provision of a pointer to the location of archived file in archive container;
— provision of a container for other information related to the archive itself and the Content Information.

The elements of MPEG-21 DIDL 2nd Edition Profile for PA-AF, their use, and restrictions applied on them are listed in Table 1.

Table 1 — Elements of MPEG-21 DIDL 2nd Edition Profile for PA-AF

MPEG-21 DIDL 2nd Edition Profile Element	Restriction
DIDL	Possible child element is only Container, and the cardinality is exactly 1
Container	As in 7.2.8 of ISO/IEC 21000-2:2005
Item	Possible child elements are Component and Descriptor
Component	Possible child element is Resource
Resource	Restricted to have no child element
	Possible attributes are mimeType, ref, and contentEncoding
	Resource element shall not carry inline binary data as its element content
Descriptor	Possible child element is only Statement
Statement	Possible attribute is only mimeType with value “text/xml”

The association of elements of MPEG-21 DIDL 2nd Edition profile for PA-AF and file structure is listed in Table 2.

Table 2 — Elements of MPEG-21 DIDL 2nd Edition Profile for PA-AF and file structure association

Element Name	Association to file structure
Container	Directory
	One directory is modeled by one Container element
Item	File
	One file is modeled by one Item element
Component	Fragment of file
	If a file is not fragmented, only one Component shall occur as child element of Item
	If a file is fragmented, the following are applied: – One Component is associated with one fragment of file – Occurance order of Component elements reflects order of fragments of file
Resource	Provide link to physical location of archived files in the archive container

© ISO/IEC 2009 – All rights reserved
Provided by IHS under license with ISO
Copyright International Organization for Standardization
Not for Resale

The DIDL element shall contain exactly one Root Container. The Root Container can contain one or more Container element(s), which is/are associated with the directory, and/or one or more Item element(s), which is/are associated with the file.

If file is split into several fragments, each fragment shall be archived in separate PA-AF files. PA-AF does not mandate how to split files; however, it is recommended that the file be split according to its byte order. For example, if file is split into three fragments, then fragment 1 shall contain the data subset from byte 0 until byte X-1, fragment 2 shall contain the data subset from byte X until byte Y-1, and fragment 3 shall contain byte Y until the last byte of the original file. For every PA-AF file, the Item element associated to fragmented file shall have as many child Component elements as the number of file fragments. Annex G provides a showcase of fragmented files in PA-AF and how they are described.

6.3 File Attribute Model

The file attribute model is metadata designed to carry any attributes that can be attached to a directory or file in the file system. In use with MPEG-21 DIDL 2nd Edition profile for PA-AF, file attribute model metadata shall be carried under the Statement of first Descriptor of each Container or Item. US-ascii or UTF-8 as defined in IETF RFC 3629 shall be used for the character set of the default encoded path.

Figure 6 shows the structure of file attribute model metadata. Table 3 describes the semantics of file attribute model metadata. In addition to normative file attributes, PA-AF also provides placeholders to carry non-normative file attributes. These non-normative file attributes can be defined by the creator of a PA-AF file for use in specific application domains only.

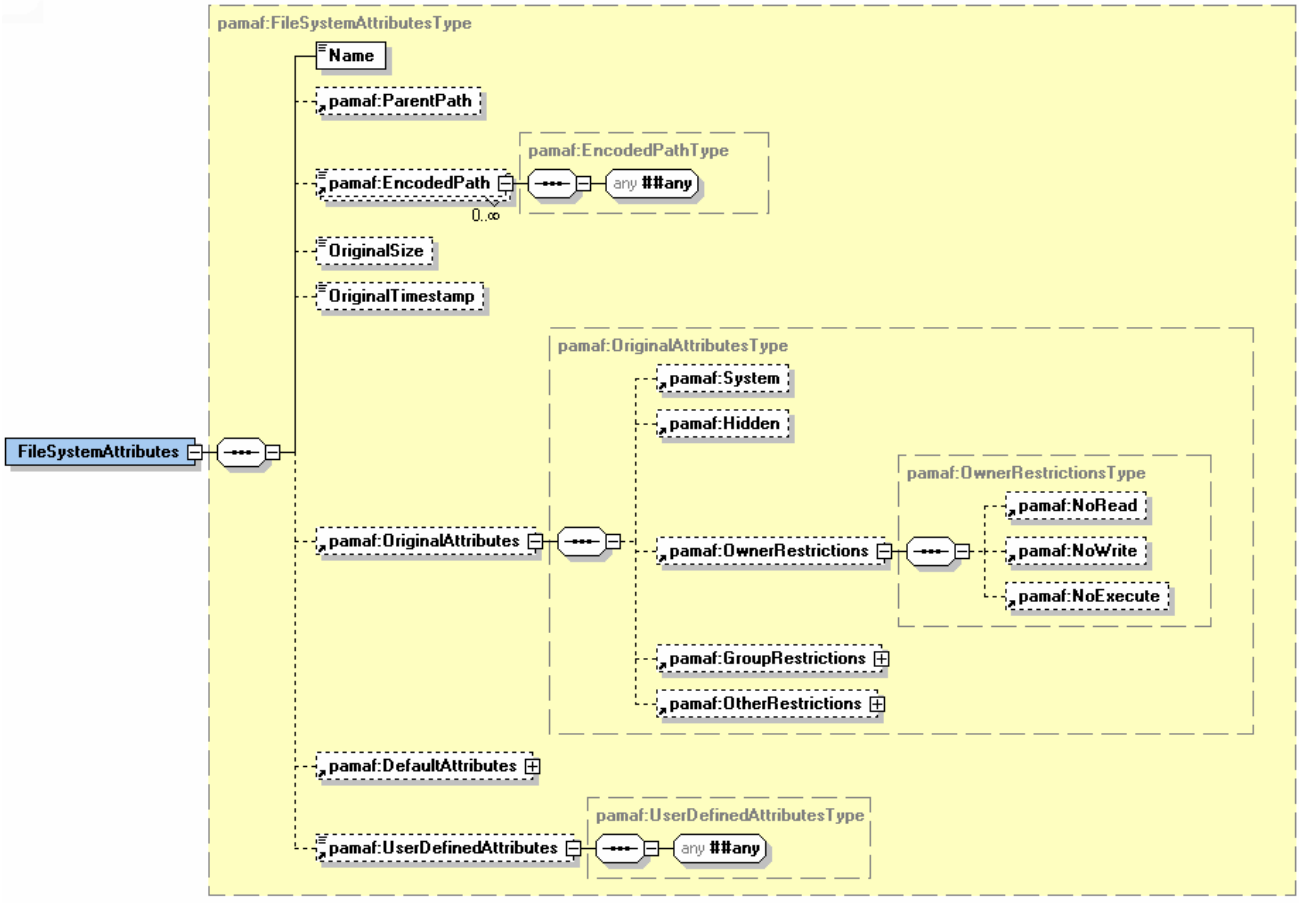

Figure 6 — Structure of file attribute model metadata

No reproduction or networking permitted without license from IHS

Copyright International Organization for Standardization
Not for Resale
Provided by IHS under license with ISO
© ISO/IEC 2009 – All rights reserved

Table 3 — Semantics of file attribute model metadata

Name	Definition
FileSystemAttributes	Describes attributes that can be attached to a file or a directory of a file system
Name	Describes the name of the file or directory it describes
ParentPath	Describes the URI of absolute path from the file system root to the file or directory Only files and directories under the first `Container` needs to declare `ParentPath`; the remaining parent path of file or directories can be inferred.
EncodedPath	Describes the original path of the file encoded by base64 binary.
@charset	Attribute of EncodedPath. Describes the original character set that is used to encode the encoded path of the file. PA-AF adopts the character sets recommended by IANA Matrix which can be found at http://www.iana.org/assignments/character-sets and http://www.iana.org/assignments/media-types-parameters.
@original	Attribute of EncodedPath. Describes whether the encoded path is the original encoded path for the file. A file can have its path encoded in many encoded paths but may have only one original encoded path. The PA-AF extractor shall first try to restore the file in the path according the original encoded path in order to restore it to its original form. If this is not possible, it can try to use other available encoded paths.
@default	Attribute of EncodedPath. Describes whether the encoded path is the default encoded path for the file. A file can have its path encoded in many encoded paths but may have only one default encoded path. The PA-AF extractor shall first try to restore the file in the path according the original encoded path. if this is not possible, it can try to use other available encoded paths. If there is no encoded path that can be used for the target platform, the PA-AF extractor should generate a path name based on this default encoded path. The character set of the default encoded path should be US-ASCII or UTF-8 in order to allow PA-AF extractors to have at least one possible encoded path name.
OriginalSize	Describes the size of file. The unit is “byte”
OriginalTimestamp	Describes the original timestamp of a last modification time of the file or folder given by the file system. OriginalTimestamp is stored in the format “timePointType” adopted from MPEG-7 data types for universal representation across different operating systems and filing systems
OriginalAttributes	Describes attributes whose values are already set from its original filing system. The attributes includes “System”, “Hidden”, “OwnerRestrictions”, “GroupRestrictions”, and “OtherRestrictions”

No reproduction or networking permitted without license from IHS

© ISO/IEC 2009 – All rights reserved
Copyright International Organization for Standardization
Not for Resale
Provided by IHS under license with ISO

Name	Definition
DefaultAttributes	Describes attributes whose values are not set or are not supported by its original filing system. The attributes include “System”, “Hidden”, “OwnerRestrictions”, “GroupRestrictions”, and “OtherRestrictions”. Validation rule: DefaultAttributes and OriginalAttributes shall have no common member (shall be disjoint). For example, if the original file format has only set values for “System”, “Hidden”, and “OwnerRestrictions”, then PresetAttributes shall have members: “System”, “Hidden”, and “OwnerRestrictions”; whereas DefaultAttributes shall have members: “GroupRestrictions” and “OtherRestrictions”.
UserDefinedAttributes	Provides a placeholder to carry non-normative file/directory attributes that are defined by users. These non-normative attributes are intended for specific application domains. Applications that cannot parse/understand these attributes are not mandated to process them.
System	If present for describing a directory, it describes all files under this directory and sub-directories as system’s files f present for describing a file, it describes the file as a system’s file
Hidden	Describes that the file or directory is hidden. If used for describing a directory, the effect of this attribute is recursive to all files under this directory and sub-directories
OwnerRestrictions	Describes any restrictions on access imposed to the owner
GroupRestrictions	Describes any restrictions on access imposed to the group of the owner
OtherRestrictions	Describes any restrictions on access imposed to any user other than the owner and its group
NoRead	Restricts read action to the file or directory. The absence of this element indicates that the file or directory can be read by the user
NoWrite	Restricts write (modify) action to the file or directory. The absent of this element indicates that the file or directory can be written (modified) by the user
NoExecute	Restricts execute action to the file or directory. The absenceof this element indicates that the file can be executed by the user

6.4 Relative File Location Reference

Relative URL, defined in RFC1898: Relative Uniform Resource Locators, should be used to refere any Content Information files stored in the PA-AF file. A relative URL with only a fragment string is regarded as the URL to the same PA-AF file.

If a ref attribute of a Resource element in DIDL has the value of relative URL, then context-root of the relative URL (Base URL) is the virtual most root folder of the PA-AF file. This means that the Base URL of the relative URL in the DIDL should be the virtual directory that exists at the same level as DIDL.

Provided by IHS under license with ISO © ISO/IEC 2009 – All rights reserved
Copyright International Organization for Standardization
Not for Resale

A relative URL (relative path) begining with "./" (or "../") shall be regarded as the context-path from the virtual location of the file that contains the reference. A relative URL (relative path) not beginning with "./" (or "../") shall be regarded as if "./" is added at the beginning of the path string so that the path is the context-path from the virtual location of the file which contains the reference.

7 Context Information

7.1 Overview

Context Information can consist of Context Information known to PA-AF and also unknown Context Information. PA-AF adopts the profile of the MPEG-7 Multimedia Description Scheme (MDS designed for and dedicated to PA-AF. In addition, because application domains that may use PA-AF as part of their system may vary and it is difficult to provide complete Context Information that fits all these various application domains, PA-AF provides a reference mechanism to link Context Information dedicated only to a specific application domain. Applications that cannot understand this Application Specific Context Information are not required to process it.

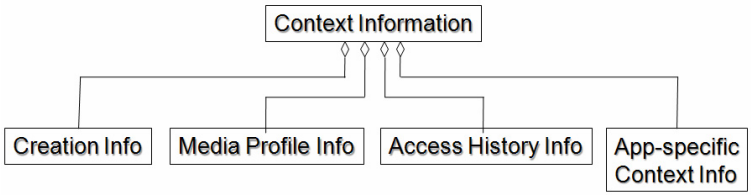

Figure 7 — Context Information structure

Figure 7 illustrates components of Content Information in PA-AF. The profile of MPEG-7 MDS for PA-AF contains Creation Information, Media Profile Information, and Access History Information. 7.2 describes the profile of MPEG-7 MDS for PA-AF; 7.3 explains the reference mechanism to accommodate Application Specific Context Information.

7.2 MPEG-7 Multimedia Description Scheme Profile for PA-AF

MPEG-7 Multimedia Description Scheme (MDS) profile of PA-AF is a subset of ISO/IEC 15938-5:2003. It provides tools for multimedia description. PA-AF adopts only some elements from the collection of MPEG-7 MDS for its Creation Information, Media Profile Information, and Access History Information. Tables 4, 5 and 6 list selected the MPEG-7 MDS elements and restrictions applied to them when used in PA-AF.

No reproduction or networking permitted without license from IHS

© ISO/IEC 2009 – All rights reserved
Provided by IHS under license with ISO
Copyright International Organization for Standardization
Not for Resale

Table 4 — Selected elements from MPEG-7 MDS profile for PA-AF's Creation Information

Descriptors/Datatype/Elements	Restrictions	Remarks
Creation information tools		
CreationInformationType		*Describes creation features of the multimedia content*
Creation	Describes the creation of the content of PA AF	*Describes the creation of the content, including places, dates, actions, materials, staff (technical and artistic) and organizations involved*
Title	Shall use only text title. More complicated title media, such as a title with image, video, or audio, are not defined but are not precluded	*Describes one textual title of the multimedia content. Multiple titles are allowed. They may correspond to different types (indicated by the type attribute) or to different languages (indicated by the xml:lang attribute)*
TitleMedia	Excluded	*PA-AF shall use only a simple title mechanism*
Abstract		*Describes a textual abstract of the multimedia content (optional). It is a summary, assigned during the creation process, of what is conveyed in the multimedia content*
Creator		*Describes one creator of the multimedia content (optional). It allows the description of persons, organizations, groups, and so forth involved in the creation as well as their role*
CreationCoordinates		*Describes the location and the date of creation of the multimedia content (optional)*
Location		*Describes the place where the multimedia content was created (optional)*
Date		*Describes the date or period when the multimedia content was created (optional)*
CreationTool		*Describes one device (and its settings) used in the creation of the multimedia content (optional)* **Note** that Creation Tool is different from the PA-AF pre-processing tool. CreationTool defines a module/application used to create the content; the PA-AF pre-processing tool is a module used to process the content it is archived.

No reproduction or networking permitted without license from IHS

Copyright International Organization for Standardization
Not for Resale
Provided by IHS under license with ISO
© ISO/IEC 2009 – All rights reserved

Descriptors/Datatype/Elements	Restrictions	Remarks
Tool		*Describes a tool used during the creation process. For example: software, lenses, films, musical instrumenst, microphonse, and so forth*
Settings		*Indicates the setting (parameters) for the tool used during creation (optional). The names and values of tool settings are tool specific and are not specified by this standard*
CopyrightString		*Describes a textual label indicating information that may be displayed or otherwise made known to the end user (optional). It is not a formal declaration of the usage rights of the multimedia content*
Classification	Describes the user and service- oriented classification of the PA AF content	*Describes the classification of the multimedia content*
Form		*Describes the production type of the document, such as, film, news program, magazine, documentary (optional)*
Genre		*Describes what the multimedia content is about (broad classification), such as sports, politics, economics, (optional)*
Subject		*Describes the subject (specific classification) of the multimedia content (optional). The subject allows a textual annotation to classify the multimedia content*
Purpose		*Describes one purpose for which the multimedia content was created (optional)*
Language		*Describes one language of the spoken audio of the program (optional)*
CaptionLanguage		*Describes one language of the caption information included with the program (optional). The type of caption information associated with the program is denoted by the closed attribute. Closed captions can be turned on or off by the user; open captions (or subtitles) are part of the picture itself and remain visible*

© ISO/IEC 2009 – All rights reserved

Provided by IHS under license with ISO
Copyright International Organization for Standardization
Not for Resale

Descriptors/Datatype/Elements	Restrictions	Remarks
SignLanguage		*Specifies the audio sign language provided for the multimedia content, and, optionally, qualifies the use of signing as a primary language or as a translation of the spoken dialogue (optional)*
Release		*Describes the release date and region of the multimedia content (optional)*
Target		*Describes the target of the multimedia content in terms of market classification, age, and country or region (optional)*
Market		*Describes one targeted market of the multimedia content (optional)*
Age		*Describes the targeted age range of the multimedia content (optional)*
Region		*Describes one target country or region for the multimedia content (optional)*
ParentalGuidance		*Describes one parental guidance classification of the multimedia content (optional)*
MediaReview		*Describes one media review about the multimedia content (optional)*
Rating		*Specifies the rating value and criterion used in the review (optional)*
FreeTextReview		*Describes a free-text review of the multimedia content without reference to a rating scheme (optional). There can be multiple instances of the review in different languages*
ReviewReference		*Describes the Media Locator of the material from where the review may have been extracted or quoted (optional). Examples are the TV magazine that published the review, the Film Guide from which the review was quoted, an interview from which the review was transcribed*

--`,,```,,,,````-`-`,,`,,`,`,,`---
Provided by IHS under license with ISO © ISO/IEC 2009 – All rights reserved
Copyright International Organization for Standardization
Not for Resale

Descriptors/Datatype/Elements	Restrictions	Remarks
Reviewer		*Describes the reviewer/critic of the multimedia content (optional). Since it is defined as AgentType, this field can describe a person, a group of persons, or an organization*
RelatedMaterial	Shall have Material Type and MediaLocator as its children elements	*Describes material containing additional information about the multimedia content or related to it (e.g., extended reports of a news program or Web pages with information about topics covered in the news).* **Note that** content can also related material that are stored in the same and/or other files
MaterialType		*Describes the type of the related material (optional). For example, script of a movie, original book, lyrics of a song, or drafts of a graphic design*
MediaLocator		*Describes the media location of the related material*

Table 5 — Selected elements from MPEG-7 MDS profile for PA-AF's Media Profile Information

Descriptors/Datatype/Elements	Restrictions	Remarks
Media description tool		
MediaInformationType	Shall have only MediaProfileType as its child element	*Describes the physical format of the multimedia data*
MediaIdentificationType	Excluded	*PA-AF MAF should use MPEG-21 DII for content identification*
MediaProfileType	Shall not have MediaTranscodingHints as its child element	*Describes the media profile of the multimedia content being described*
ComponentMediaProfile		*Describes one component Media Profile of a multiplexed Media Profile, describing a multimedia content with different component multimedia contents (optional)*
MediaFormat		*Describes the format and coding parameters of the Media Profile*
Content		*Describes the media present in the Media Profile (e.g., audio, image, scene definition, video, audiovisual)*

© ISO/IEC 2009 – All rights reserved
Provided by IHS under license with ISO
Copyright International Organization for Standardization
Not for Resale

Descriptors/Datatype/Elements					Restrictions	Remarks
			Medium			*Describes the physical storage medium on which the Media Profile is stored (optional)*
			FileFormat			*Describes the file format of the Media Profile (optional)*
			FileSize			*Indicates the size, in bytes, of the file where the Media Profile is stored (optional)*
			System			*Describes the broad media format of the Media Profile (optional)*
			Bandwidth			*Indicates the bandwidth range, in hertz, covered by the coded multimedia content (optional). Its value depends on the acquisition filters or transcoding applied to the Media Profile*
			BitRate			*Indicates,in bits per second, the nominal bit rate of the Media Profile (optional)*
			TargetChannelBitRate			*Indicates, in bits per second, the nominal bit rate of the channel for which this MediaProfile is targeted (optional)*
			ScalableCoding			*Indicates the scalability used in the coding (optional)*
			VisualCoding			*Describes the coding of the visual component of the Media Profile (optional). If a content entity is AV, VisualCoding and AudioCoding are used simultaneously*
				Format		*Describes the coding format of the visual component of the Media Profile (optional). If a content entity is AV, VisualCoding and AudioCoding are used simultaneously*
				Pixel		*Describes the pixels of images and video frames (optional)*
				Frame		*Describes the frame of images and video frames*
				ColorSampling		*Describes the color sampling on the video component of the Media Profile (optional)*
			AudioCoding			*Describes the coding of the audio component of the Media Profile (optional). If a content entity is AV, VisualCoding and AudioCoding are used simultaneously*

--`,,```,,,,````-`-`,,`,,`,`,,`---

Copyright International Organization for Standardization
Not for Resale
Provided by IHS under license with ISO © ISO/IEC 2009 – All rights reserved

Descriptors/Datatype/Elements	Restrictions	Remarks
Format		*Describes the coding format of the audio component of the Media Profile (optional). If a content entity is AV, VisualCoding and AudioCoding are used simultaneously*
AudioChannels		*Describes the number and optionally the configuration of audio channels in the Media Profile (optional). The channel configuration information can be described by use of 'front', 'side', 'rear', and 'lfe' attributes. For multilingual or multitrack audio streams, the number of tracks can be described on the 'track' attribute*
Sample		*Describes the audio samples (optional)*
Emphasis		*Indicates the audio pre-emphasis used in the encoding of the multimedia content (optional)*
Presentation		*Describes the audio presentation format of the Media Profile (optional). An example of CS is AudioPresentationCS. AudioChannels allows one to define channel configurations is a more detailed way*
SceneCodingFormat		*Describes the coding format for a scene composition stream (optional), for example a BIFS stream in MPEG-4*
GraphicsCodingFormat		*Describes the coding format for a graphics stream (optional), for example VRML*
OtherCodingFormat		*Describes other coding formats that are not visual, audio, scene description, or graphics, such as HTML or Flash (optional)*
MediaTranscodingHints	Excluded	*PA-AF does not consider transcoding operation.*
MediaQuality		*Describes the quality of the signal corresponding to the Media Profile (optional)*
QualityRating		*Describes the rating values and the criterion used to create the media quality ratings*
RatingSource		*Describes the source that provides the ratings (optional)*

No reproduction or networking permitted without license from IHS

© ISO/IEC 2009 – All rights reserved
Copyright International Organization for Standardization
Not for Resale
Provided by IHS under license with ISO

Descriptors/Datatype/Elements	Restrictions	Remarks
RatingInformationLocator		*Indicates the locator for additional information about the quality rating method (optional)*
PerceptibleDefects		*Describes defects that are perceived in the media (optional)*
MediaInstance	Excluded	*PA-AF shall use MPEG-21 DIDL to describe media instance location.*
@master		*Indicates whether the Media Profile corresponds to the original or master profile of the multimedia content entity. The default value of this attribute is false*

Table 6 — Selected elements from MPEG-7 MDS profile for PA-AF Access History Information

Descriptors/Datatype/Elements	Restrictions	Remarks
User interaction tools		
User Preferences	Excluded	*PA-AF is not concerned with consumption preference*
Usage History	Used for recording access history only, not whole consumption history. See Action Type for more detail	*Specifies user's multimedia content consumption history*
UserIdentifier		*Identifies the individual for whom the usage history is provided. This element is of the type UserIdentifierType and contains the protected attribute. Thus, the identity of the user shall not be disclosed unless this attribute is set to false*
UserActionHistory	Not concerned with the duration of access. If the content is extracted, modified, and restored, there should exist two UserActionHistoryRecord, one for extracting and one for storing.	*Describes the history of the actions the user has carried out during certain observation periods*
ObservationPeriod	Excluded	*Only records action at a snapshot of time*
UserActionList		*Describes a list of actions of the same type, i.e., all actions in the UserActionList carry the same ActionType value*

No reproduction or networking permitted without license from IHS

Copyright International Organization for Standardization
Not for Resale
Provided by IHS under license with ISO © ISO/IEC 2009 – All rights reserved

Descriptors/Datatype/Elements	Restrictions	Remarks
Attribute: numOfInstances		*Indicates the number of UserAction elements in a UserActionList*
Attribute: totalDuration	Excluded	*Only records action at a snapshot of time*
ActionType	Limited to actions related to file archiving (e.g. extract, open, remove, etc.)	*Indicates the type of action performed by the user, such as "View," "Pause," "Play," and so forth. All UserAction elements in an ActionList have the same ActionType. TermUseType is defined in clause 7 of 21000-5:2004/Amd.1:2007. ActionType may contain a free term or a term from a classification scheme. A classification scheme that may be used (the ActionTypeCS) is defined in Annex B of 21000-5:2004/Amd.1:2007].*
UserAction		*Describes a single user action*
ActionTime	Used only for general time.	*Describes the time that the action took place and, if applicable, its duration (e.g., for "Play," "Pause," and so forth). The time of occurrence of the action can be described by MediaTime and/or by GeneralTime. The duration of a UserAction refers to the duration in terms of the media time, which is identical to the duration in UTC for a large number of action types, but may be different for such action types as "Repeat" or "FastForward."*
MediaTime	Excluded	
GeneralTime		*Action time relative to Coordinated Universal Time (UTC) in the Gregorian date/time format*
ProgramIdentifier	Limited to carry only the MPEG-21 DII value	*Unique identifier of the program associated with the given action. Each Action is associated with a single program and, consequently, a single ProgramIdentifier.*
ActionDataItem	Excluded	

© ISO/IEC 2009 – All rights reserved
Copyright International Organization for Standardization
Not for Resale
Provided by IHS under license with ISO

7.3 Application Specific Context Information

Context information not defined in 7.2 can be included in a PA-AF file as Appliation-specific Context Information. Application-specific Context Information is carried in a PA-AF file as Content Information and is referenced from a DIDL instance as illustrated in Fig. 8. Reference to Application-specific Context Information is described as a value of a 'ref' attribute of a Statement element. The value of the 'ref' attribute shall comply with the item-naming restriction as described in 9.3 and the mechanism for addressing resolution as described in B.1.

The Application-specific Context Information can contain references to other Content Information files stored in the same PA-AF file. When the reference is compliant with a relative URI from the context-root path of the stored folder structure information, the referenced file can be specified by the relative path from the virtual location of the Application-specific Context Information. A relative path begining with "./" (or "../") shall be regarded as the context-path from the virtual location of the file that contains the reference. A relative path not beginning with "./" (or "../") shall be regarded as if "./" is added at the beginning of the path string so that the path is the context-path from the virtual location of the file. In this case, the Base URL of the relative URL in the Application-specific Context Information should be the virtual directory at the same level as the Application-specific Context Information file is placed. See also 6.4 Relative File Location Reference.

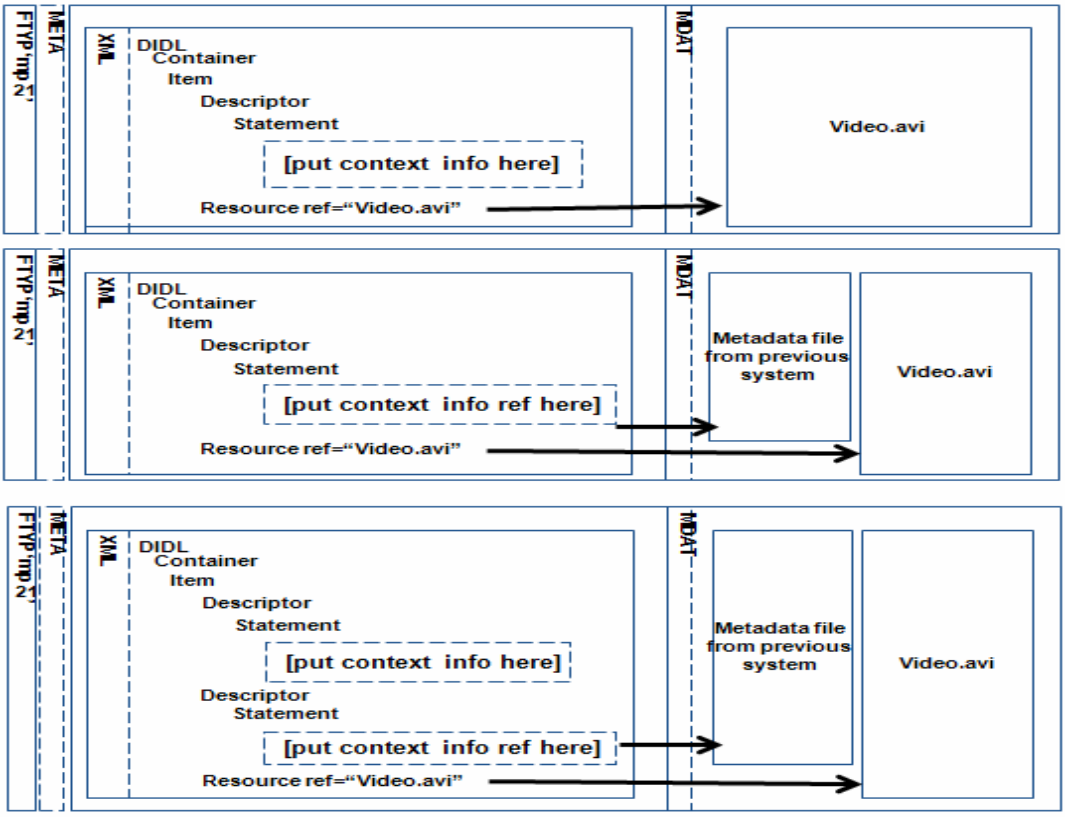

Figure 8 — Possible use of Application Specific Context Information in a PA-AF file

8 Pre-processing Information

8.1 Overview

PA-AF does not specify any mandatory pre-processing tools or modules prior to archiving Content Information into archive container but does specify a mechanism to describe the use of such pre-processing tools or modules. Pre-processing Information contains descriptions for reversing the pre-processing process. For example, if the Content Information is compressed by compression algorithm X, then Pre-processing

Provided by IHS under license with ISO © ISO/IEC 2009 – All rights reserved
Copyright International Organization for Standardization
Not for Resale

Information associated to that Content Information describes a tool or module for reversing the compression algorithm X so that the compressed Content Information can be restored to its original form. Pre-processing processes that can be applied to Content Information include: data compression, data protection, data integrity checking (authentication of originality), and data governance validation checking.

Applications that will extract Content Information from a PA-AF file should first read and understand pre-processing information associated with the Content Information to be extracted. On the basis of the information obtained from the pre-processing, the applications acquire appropriate tools or modules to reverse the pre-processing. Note that PA-AF provides necessary information to identify, locate, and use the tools or modules but does not specify a mechanism to acquire them.

PA-AF adopts ISO/IEC 21000-4:2006/Amd.1:2007 to model Pre-processing Information. PA-AF relaxes several restrictions applied by ISO/IEC 21000-4:2006/Amd.1:2007 and adopts only selected elements. The selected elements of ISO/IEC 21000-4:2006/Amd.1:2007 are referred as MPEG-21 IPMP Components Base Profile for PA-AF. The MPEG-21 IPMP Components Base Profile for PA-AF provides:

— descriptions of the use of data compression, data protection, and data integrity checking tools;
— a place holder to carry the integrity data (i.e., digest message);
— a place holder to carry data governance, which is modeled by MPEG-21 REL MAM Profile, for the associated Content Information.

Subclause 8.2 provides the specification of identification of pre-processing tools. 8.3 describe validation rule of the use of contentEncoding and MPEG-21 IPMP Components Base Profile for PA-AF. 8.4 provides the specification of MPEG-21 IPMP Components Base Profile for PA-AF. 8.5 provides the specification of content usage governance description for PA-AF. The informative usage examples of pre-processing information for PA-AF are given in D.3.

No reproduction or networking permitted without license from IHS

8.2 Identification of Pre-processing Tool

PA-AF adopts content encoding and application format identification defined by the IANA matrix [2]. In addition to this matrix, Annex C lists recommendations for identification that are not covered by the IANA matrix by the time this specification is specified. If there is identification conflict between one recommended by IANA and by Annex C, recommendation by IANA shall be used.

8.3 On the Use of contentEncoding Attribute of DIDL and MPEG-21 IPMP Components Base Profile for PA-AF

The application of pre-processing tools can be described by contentEncoding attribute of Resource element and MPEG-21 IPMP Components Base Profile for PA-AF. The following rules are applied in the use of contentEncoding and MPEG-21 IPMP Components Base Profile for PA-AF:

— In the case both contentEncoding and MPEG-21 IPMP Components Base Profile for PA-AF are used at the same time, tools described in contentEncoding attribute shall be executed first followed by tools described in MPEG-21 IPMP Components Base Profile for PA-AF.
— If there are more than one tools described in contentEncoding attribute, they are to be executed as defined by 7.2.11 of ISO/IEC 21000-2:2005.
— If there are more that one tools described in MPEG-21 IPMP Component Base Profile for PA-AF, they are to be executed as defined by 7.2 of ISO/IEC 21000-4:2006.

In the present of contentEncoding only, the value of content_encoding of IINF box shall be the same as the value of the contentEncoding.

In the present of MPEG-21 IPMP Component Base Profile for PA-AF only, the value of content_encoding of IINF box shall be the concatenation of all values of ipmpinfo:ToolID ordered values of ipmpinfo:Tool's order attribute in decreasing manner from left to right.

© ISO/IEC 2009 – All rights reserved
Provided by IHS under license with ISO

Copyright International Organization for Standardization
Not for Resale

In the present of both contentEncoding and MPEG-21 IPMP Component Base Profile for PA-AF, the value of content_encoding of IINF box shall be the concatenation of all values of ipmpinfo:ToolID ordered values of ipmpinfo:Tool's order attribute in decreasing manner from left to right followed by value of contentEncoding attribute.

8.4 MPEG-21 IPMP Components Base Profile for PA-AF

MPEG-21 IPMP Components Base Profile for PA-AF provides a simple and flexible protection description mechanism for PA-AF. MPEG-21 IPMP Components Base Profile for PA-AF consists of three major components. They are:

- IPMPDIDL. Selected elements for PA-AF are:
  - ipmpdidl:DIDL
  - ipmpdidl:Container
  - ipmpdidl:Item
  - ipmpdidl:Component
  - ipmpdidl:Resource
  - ipmpdidl:Descriptor
  - ipmpdidl:Statement
  - ipmpdidl:Anchor
  - ipmpdidl:Fragment
  - ipmpdidl:Identifier
  - ipmpdidl:Info
- IPMP General Information as described in 9.4.3 of ISO/IEC 21000-4:2006/Amd.1:2007
- IPMP Information as described in 9.4.4 of ISO/IEC 21000-4:2006/Amd.1:2007

MPEG-21 IPMP Components Base Profile for PA-AF revokes restriction applied on ISO/IEC 21000-4:2006/ Amd.1:2007 for the use of more than one IPMP tools. The revoked restrictions are:

- In 9.4.3 of ISO/IEC 21000-4:2006/Amd.1:2007, revoke restriction on ipmpinfo:ToolList such as "An ipmpinfo:ToolList is restricted to include the following child element: a single ipmpinfo:ToolDescription"
- In 9.4.3 of ISO/IEC 21000-4:2006/Amd.1:2007, revoke restriction on ipmpinfo:ToolDescription such as "Restricted to at most one occurrence from unbounded occurrences"
- In 9.4.4 of ISO/IEC 21000-4:2006/Amd.1:2007, revoke restriction on ipmpinfo:Tool such as "Restricted to at most one occurrence from unbounded occurrences"

8.5 Content Usage Governance Description

PA-AF adopts ISO/IEC 21000-5:2004/Amd.1:2007 to describe governance on the usage and distribution of archive and Content Information.

9 File Format for PA-AF

9.1 Overview

PA-AF adopts ISO/IEC 21000-9, for archive packaging with some restrictions. The restrictions applied to MPEG-21 File Format for PA-AF is described in the following subclauses.

9.2 Restrictions on MPEG-21 File Format for PA-AF

Table 7 lists file format boxes of ISO/IEC 21000-9 and restrictions applied on those boxes (if any) when used in PA-AF.

No reproduction or networking permitted without license from IHS

Provided by IHS under license with ISO © ISO/IEC 2009 – All rights reserved
Copyright International Organization for Standardization
Not for Resale

Table 7 — Restrictions applied to MPEG-21 FF when used for PA-AF

Box Name				Mandatory	Restrictions for PA-AF	
Level 1	Level 2	Level 3	Level 4		Use	Description
ftyp				Yes	Yes	
mdat				No	Yes	
Free				No	No	
skip				No	No	
meta				Yes	Yes	
	Hdlr			Yes	Yes	
	Dinf			No	Yes	Only if separated archived file(s) exist
		dref		No	Yes	Only if separated archived file(s) exist
	ipmc			No	No	Use tool in 7
	Iloc			No	Yes	
	Ipro			No	No	Use tool in 7
		sinf		No	No	Use tool in 7
			frma	No	No	Use tool in 7
			Imif	No	No	Use tool in 7
			schm	No	No	Use tool in 7
			schi	No	No	Use tool in 7
	Iinf			No	Yes	
	Xml			No	Yes	
	bxml			No	No	
	Pitm			No	No	

9.3 Restrictions on Item Name in IINF Box and URI Value in Reference Attribute

Item_name of IINF associates a string (chosen by creator of the PA-AF file) to Content Information stored in MDAT. Together with Item_ID in ILOC, Item_name provides a mechanism to resolve the location of Content Information in MDAT (offset start and length).

The URI value of the Resource element provides an address to resolve the location of target Content Information. The format of the URI value of the Resource element shall be as follows: [URI of PA-AF file where the target Content Information is stored] + '#' + [value of Item_name of IINF in the PA-AF file which is associated to the target Content Information]. If the Content Information is located in the MDAT box of the same PA-AF file, the first part (URI of PA-AF file location) and '#' can be omitted.

In the case of a protected Resource element of a DIDL instance, since the protected Resource element's ref attribute's value is unknown, it shall have a child element ipmpdidl:Identifier element. The value of the ipmpdidl:Identifier shall match the Item_name's value in IINF for a file modeled by the protected Resource element.

If Item_name contains non-ascii codes such as a multiple byte character set, a percent escaped value shall be used to replace such non-ascii codes.

Content information archived in a PA-AF file can be addressed within the container file by using one of following anchor forms:

a. Item identification in Item Location (ILOC) of a PA-AF file. For example, the file can be addressed with the following reference: ref="#item_id=2"
b. An item name in Item Location (ILOC) of PA-AF file. For example, the file can be addressed with the following reference: ref="#item_name=folder2/file2.wav"
c. The logical relative file path. For example, the file can be addressed with the following reference: ref="folder2/file2.wav"

--`,,```,,,,````-`-`,,`,,`,`,,`---

© ISO/IEC 2009 – All rights reserved

Provided by IHS under license with ISO
Copyright International Organization for Standardization
Not for Resale

When the anchor form a) or b) is chosen, values set in the item_id or the item_name fields of the item information box are refered from DID XML with the relative URL string began with a cross-hatch "#" character when the referering XML and archived files are contained in the same file. According to RFC3986: Uniform Resource Identifiers (URI): Generic Syntax, RFC1738: Uniform Resource Locators (URL) and RFC1808: Relative Uniform Resource Locators, a relative URL with only a fragment string is regarded as the URL to the same file. The cross-hatch "#" character leads the fragment string.

All values of the item_name field shall be set to the relative path name from the context-root of the hierarchical folder structure of the archived file. Context-root is the root-most folder of the PA-AF package. The context-root of the package is the virtual directory that exists at the same level as DIDL. For detailes, see 6.4 Relative File Location Reference.

9.4 File Brands

The ftyp box of ISO/IEC 21000-9 contains a list of brands to identify the file. The brands used for PA-AF are:

— Major_brand: mp21
— Minor_version: paf1, paf2, paf3, paf4, paf5
— Compatible_brands: iso2, mp21

10 Conformance Points

PA-AF defines five conformance points. They are:

- Conformation point 1 provides basic packaging functionality. A PA-AF file that conforms to this conformance point must have minor_version value “paf1” in its ftyp box. The implementation that conforms to this conformance point shall implement:
    - MPEG-21 File Format for PA-AF
    - MPEG-21 DIDL 2nd Edition Profile for PA-AF
    - ISO/IEC 21000-3:2003
    - MPEG-7 Creation Information
- Conformance point 2 provides capability to describe data protection, data compression, and data integrity checking in addition to the basic packaging functionality. A PA-AF file that conforms to this conformance point must have minor_version value “paf2” in its ftyp box. The implementation that conforms to this conformance point shall implement:
    - All components in conformance point 1
    - MPEG-21 IPMP Components Base Profile for PA-AF
- Conformance point 3 provides capability to describe governance on the usage of PA-AF file in addition to the basic packaging functionality. A PA-AF file that conforms to this conformance point must have minor_version value “paf3” in its ftyp box. The implementation that conforms to this conformance point shall implement:
    - All components in conformance point 1
    - ISO/IEC 21000-5:2004/Amd.1:2007
- Conformance point 4 provides standard context information for PA-AF file and its Content Information in addition to the basic packaging functionality. A PA-AF file that conforms to this conformance point must have minor_version value “paf4” in its ftyp box. The implementation that conforms to this conformance point shall implement:
    - All components in conformance point 1
    - MPEG-7 MDS Scheme Profile for PA-AF
- Conformance point 5 provides all functionalities offered by conformance points 1 thru 4. A PA-AF file that conforms to this conformance point must have minor_version value “paf5” in its ftyp box. The implementation that conforms to this conformance point shall implement:
    - All components in conformance point 1
    - MPEG-21 IPMP Components Base Profile for PA-AF
    - ISO/IEC 21000-5:2004/Amd.1:2007
    - MPEG-7 MDS Scheme Profile for PA-AF

--`,,```,,,,````-`-`,,`,,`,`,,`---

Provided by IHS under license with ISO © ISO/IEC 2009 – All rights reserved
Copyright International Organization for Standardization
Not for Resale

Annex A
(normative)

XML Schema Definition of Preservation Description Information

A.1 MPEG-21 DIDL 2nd Edition Profile for PA-AF Schema Definition

This Annex provides xmlschema definitions of MPEG-21 DIDL 2nd Edition Profile for PA-AF. Table A.1 lists xmlschema a definition of DIDModel for PA-AF and Table A.2 lists xmlschema a definition of MPEG-21 DIDL 2nd Edition Profile for PA-AF. The MPEG-21 DIDL 2nd Edition Profile for PA-AF provides realization for abstract elements defined in the DIDModel.

Table A.1 — DIDModel schema definition for PA-AF

```
<?xml version="1.0"?>
<schema targetNamespace="urn:mpeg:mpeg21:2002:02-DIDMODEL-NS"
xmlns:didmodel="urn:mpeg:mpeg21:2002:02-DIDMODEL-NS"
xmlns="http://www.w3.org/2001/XMLSchema"
elementFormDefault="qualified" attributeFormDefault="unqualified" version="0.01">
    <complexType name="DIDBaseType" abstract="true"/>
    <element name="Container" type="didmodel:ContainerType" abstract="true"/>
    <complexType name="ContainerType" abstract="true">
        <complexContent>
            <extension base="didmodel:DIDBaseType"/>
        </complexContent>
    </complexType>
    <element name="Item" type="didmodel:ItemType" abstract="true"/>
    <complexType name="ItemType" abstract="true">
        <complexContent>
            <extension base="didmodel:DIDBaseType"/>
        </complexContent>
    </complexType>
    <element name="Descriptor" type="didmodel:DescriptorType" abstract="true"/>
    <complexType name="DescriptorType" abstract="true">
        <complexContent>
            <extension base="didmodel:DIDBaseType"/>
        </complexContent>
    </complexType>
    <element name="Statement" type="didmodel:StatementType" abstract="true"/>
    <complexType name="StatementType" abstract="true">
        <complexContent>
            <extension base="didmodel:DIDBaseType"/>
        </complexContent>
    </complexType>
    <element name="Component" type="didmodel:ComponentType" abstract="true"/>
    <complexType name="ComponentType" abstract="true">
        <complexContent>
            <extension base="didmodel:DIDBaseType"/>
        </complexContent>
    </complexType>
    <element name="Resource" type="didmodel:ResourceType" abstract="true"/>
    <complexType name="ResourceType" abstract="true">
        <complexContent>
            <extension base="didmodel:DIDBaseType"/>
        </complexContent>
    </complexType>
</schema>
```

© ISO/IEC 2009 – All rights reserved
Copyright International Organization for Standardization
Not for Resale
Provided by IHS under license with ISO

Table A.2 — DIDL schema definiton for PA-AF

```
<?xml version="1.0"?>
<schema targetNamespace="urn:mpeg:mpeg21:2002:02-DIDL-NS"
xmlns="http://www.w3.org/2001/XMLSchema"
xmlns:didl="urn:mpeg:mpeg21:2002:02-DIDL-NS"
xmlns:didmodel="urn:mpeg:mpeg21:2002:02-DIDMODEL-NS"
elementFormDefault="qualified" attributeFormDefault="unqualified" version="0.01">
    <!--============================================================
     Import abstract types representing DID model entities:
    ============================================================-->
    <import                                namespace="urn:mpeg:mpeg21:2002:02-DIDMODEL-NS"
schemaLocation="didmodel.xsd"/>
    <!--============================================================-->
    <attributeGroup name="ID_ATTRS">
        <attribute name="id" type="ID" use="optional"/>
    </attributeGroup>
    <!--============================================================

     Container element may contain any number of Container elements
     followed by any number of Items.

    ============================================================-->
    <element                    name="Container"                    type="didl:ContainerType"
substitutionGroup="didmodel:Container"/>
    <complexType name="ContainerType">
        <complexContent>
            <extension base="didmodel:ContainerType">
                <sequence>
                    <element                ref="didmodel:Descriptor"                minOccurs="0"
maxOccurs="unbounded"/>
                    <element ref="didmodel:Container" minOccurs="0" maxOccurs="unbounded"/>
                    <element ref="didmodel:Item" minOccurs="0" maxOccurs="unbounded"/>
                </sequence>
                <attributeGroup ref="didl:ID_ATTRS"/>
                <anyAttribute namespace="##other" processContents="lax"/>
            </extension>
        </complexContent>
    </complexType>
    <!--============================================================

     Item element contains any number Choice elements,
     followed by at least one Item or Component element.
     An Item may be conditional.

    ============================================================-->
    <element name="Item" type="didl:ItemType" substitutionGroup="didmodel:Item"/>
    <complexType name="ItemType">
        <complexContent>
            <extension base="didmodel:ItemType">
                <sequence>
                    <element                ref="didmodel:Descriptor"                minOccurs="0"
maxOccurs="unbounded"/>
                    <element ref="didmodel:Component" maxOccurs="unbounded /">
                </sequence>
                <attributeGroup ref="didl:ID_ATTRS"/>
            </extension>
        </complexContent>
    </complexType>
    <!--============================================================
```


Copyright International Organization for Standardization
Not for Resale
Provided by IHS under license with ISO
© ISO/IEC 2009 – All rights reserved

```
    A Descriptor contains descriptive data about its parent
    element.

    The Descriptor may be resource-based (comprised of a single
    Component), or text-based (comprised of a single Statement).
    A Descriptor may be conditional.

    ============================================================-->
    <element                    name="Descriptor"                    type="didl:DescriptorType"
substitutionGroup="didmodel:Descriptor"/>
    <complexType name="DescriptorType">
        <complexContent>
            <extension base="didmodel:DescriptorType">
                <sequence>
                    <element ref="didmodel:Statement"/>
                </sequence>
                <attributeGroup ref="didl:ID_ATTRS"/>
            </extension>
        </complexContent>
    </complexType>
    <!--============================================================

    A Statement contains textual descriptive data within a
    Descriptor.

    Attribs:
    MimeType  - A string identifying the type of metadata

    ============================================================-->
    <element                    name="Statement"                    type="didl:StatementType"
substitutionGroup="didmodel:Statement"/>
    <complexType name="StatementType" mixed="true">
        <complexContent mixed="true">
            <extension base="didmodel:StatementType">
                <sequence>
                    <any namespace="##any" processContents="lax" minOccurs="0"/>
                </sequence>
                <attribute name="mimeType" type="string" use="required"/>
            </extension>
        </complexContent>
    </complexType>
    <!--============================================================

    Component element contains one or more Resource elements, followed by any
    number of Anchor elements.
    A Component may be conditional.

    ============================================================-->
    <element                    name="Component"                    type="didl:ComponentType"
substitutionGroup="didmodel:Component"/>
    <complexType name="ComponentType">
        <complexContent>
            <extension base="didmodel:ComponentType">
                <sequence>
                    <element ref="didmodel:Resource"/>
                </sequence>
                <attributeGroup ref="didl:ID_ATTRS"/>
            </extension>
        </complexContent>
```

--`,,```,,,,````-`-`,,`,,`,`,,`---

© ISO/IEC 2009 – All rights reserved

Provided by IHS under license with ISO

Copyright International Organization for Standardization
Not for Resale

```
    </complexType>
    <!--================================================================


     Resource element contains or points to binary data. The
     contained data may be binary or any valid XML element.

     Attribs:
     mimeType  - An identifier of a recognized scheme indicating the type
          of the resource.
     ref  - A URI from which the resource data can be obtained

    ================================================================-->
    <element name="Resource" type="didl:ResourceType"
substitutionGroup="didmodel:Resource"/>
    <complexType name="ResourceType" mixed="true">
        <complexContent mixed="true">
            <extension base="didmodel:ResourceType">
                <attribute name="mimeType" type="string" use="required"/>
                <attribute name="ref" type="anyURI"/>
                <attribute name="contentEncoding" type="NMTOKENS"/>
            </extension>
        </complexContent>
    </complexType>
    <!-- elements from here onward are unique to the DIDL representation-->
    <!--================================================================

     DIDL element may contain exactly one Container

    ================================================================-->
    <element name="DIDL" type="didl:DIDLType"/>
    <complexType name="DIDLType">
        <sequence>
            <element ref="didmodel:Container"/>
        </sequence>
        <attribute name="DIDLDocumentId" type="anyURI"/>
    </complexType>
</schema>
```

A.2 File Attribute Model Schema Definition

Table A.3 lists xmlschema definition of File Attribute Model.

Table A.3 — File attribute model schema definition

```
<?xml version="1.0" encoding="UTF-8"?>
<schema targetNamespace="urn:mpeg:mpeg21:2007:01-PAMAF-NS"
xmlns:pamaf="urn:mpeg:mpeg21:2007:01-PAMAF-NS"
xmlns:mpeg7="urn:mpeg:mpeg7:schema:2001" xmlns="http://www.w3.org/2001/XMLSchema"
elementFormDefault="qualified" attributeFormDefault="unqualified">
    <import namespace="urn:mpeg:mpeg7:schema:2001" schemaLocation="mpeg7-smp-
2004.xsd"/>
    <element name="FileSystemAttributes" type="pamaf:FileSystemAttributesType"/>
    <complexType name="FileSystemAttributesType">
        <sequence>
            <element name="Name" type="string"/>
            <element ref="pamaf:ParentPath" minOccurs="0"/>
            <element ref="pamaf:EncodedPath" minOccurs="0" maxOccurs="unbounded"/>
            <element name="OriginalSize" type="unsignedLong" minOccurs="0"/>
```

--`,,```,,,,````-`-`,,`,,`,`,,`---

Copyright International Organization for Standardization
Not for Resale
Provided by IHS under license with ISO
© ISO/IEC 2009 – All rights reserved

```
            <element name="OriginalTimestamp" type="mpeg7:timePointType" minOccurs="0"/>
            <element ref="pamaf:OriginalAttributes" minOccurs="0"/>
            <element ref="pamaf:DefaultAttributes" minOccurs="0"/>
            <element ref="pamaf:UserDefinedAttributes" minOccurs="0"/>
            <!--Validation Rule: optional for directory but has to present for file-->
        </sequence>
    </complexType>
    <element name="NoRead" type="pamaf:NoReadType"/>
    <complexType name="NoReadType"/>
    <element name="NoWrite" type="pamaf:NoWriteType"/>
    <complexType name="NoWriteType"/>
    <element name="NoExecute" type="pamaf:NoExecuteType"/>
    <complexType name="NoExecuteType"/>
    <element name="Hidden" type="pamaf:HiddenType"/>
    <complexType name="HiddenType"/>
    <element name="System" type="pamaf:SystemType"/>
    <complexType name="SystemType"/>
    <element name="EncodedPath" type="pamaf:EncodedPathType"/>
    <complexType name="EncodedPathType" mixed="true">
        <sequence>
            <any namespace="##any" processContents="lax"/>
        </sequence>
        <attribute name="charset" type="string" use="required"/>
        <attribute name="original" type="boolean" use="optional"/>
        <attribute name="default" type="boolean" use="optional"/>
    </complexType>
    <element name="OwnerRestrictions" type="pamaf:OwnerRestrictionsType"/>
    <complexType name="OwnerRestrictionsType">
        <sequence>
            <element ref="pamaf:NoRead" minOccurs="0"/>
            <element ref="pamaf:NoWrite" minOccurs="0"/>
            <element ref="pamaf:NoExecute" minOccurs="0"/>
        </sequence>
    </complexType>
    <element name="GroupRestrictions" type="pamaf:GroupRestrictionsType"/>
    <complexType name="GroupRestrictionsType">
        <sequence>
            <element ref="pamaf:NoRead" minOccurs="0"/>
            <element ref="pamaf:NoWrite" minOccurs="0"/>
            <element ref="pamaf:NoExecute" minOccurs="0"/>
        </sequence>
    </complexType>
    <element name="OtherRestrictions" type="pamaf:OtherRestrictionsType"/>
    <complexType name="OtherRestrictionsType">
        <sequence>
            <element ref="pamaf:NoRead" minOccurs="0"/>
            <element ref="pamaf:NoWrite" minOccurs="0"/>
            <element ref="pamaf:NoExecute" minOccurs="0"/>
        </sequence>
    </complexType>
    <element name="OriginalAttributes" type="pamaf:OriginalAttributesType"/>
    <complexType name="OriginalAttributesType">
        <sequence>
            <element ref="pamaf:System" minOccurs="0"/>
            <element ref="pamaf:Hidden" minOccurs="0"/>
            <element ref="pamaf:OwnerRestrictions" minOccurs="0"/>
            <element ref="pamaf:GroupRestrictions" minOccurs="0"/>
            <element ref="pamaf:OtherRestrictions" minOccurs="0"/>
        </sequence>
    </complexType>
```

--`,,```,,,,````-`-`,,`,,`,`,,`---

© ISO/IEC 2009 – All rights reserved

Provided by IHS under license with ISO

Copyright International Organization for Standardization
Not for Resale

```
    <element name="DefaultAttributes" type="pamaf:DefaultAttributesType"/>
    <complexType name="DefaultAttributesType">
        <sequence>
            <element ref="pamaf:System" minOccurs="0"/>
            <element ref="pamaf:Hidden" minOccurs="0"/>
            <element ref="pamaf:OwnerRestrictions" minOccurs="0"/>
            <element ref="pamaf:GroupRestrictions" minOccurs="0"/>
            <element ref="pamaf:OtherRestrictions" minOccurs="0"/>
        </sequence>
    </complexType>
    <element name="ParentPath" type="pamaf:ParentPathType"/>
    <complexType name="ParentPathType">
        <attribute name="ref" type="anyURI" use="required"/>
    </complexType>
    <element name="UserDefinedAttributes" type="pamaf:UserDefinedAttributesType"/>
    <complexType name="UserDefinedAttributesType" mixed="true">
        <sequence>
            <any namespace="##any" processContents="lax"/>
        </sequence>
    </complexType>
</schema>
```

No reproduction or networking permitted without license from IHS

A.3 MPEG-7 Multimedia Description Scheme Profile for PA-AF Schema Definition

Table A.4 lists xml schema definition of MPEG-7 Multimedia Description Scheme Profile for PA-AF.

Table A.4 — XML Schema definition for MPEG-7 MDS profile for PA-AF

```
<?xml version="1.0" encoding="iso-8859-1"?>
<!-- ************************************************************************
  This XML document was originally developed in the course of development
  of the ISO/IEC 15938 standard (MPEG-7). This XML document contains
  either a part of the MPEG-7 schema implementation for one or more MPEG-7
  tools as specified by the MPEG-7 Requirements or MPEG-7 description
  examples conformant to the MPEG-7 schema.

  ISO/IEC gives users of MPEG-7 free license to this XML document or
  modifications thereof for use in hardware or software products claiming
  conformance to MPEG-7.

  Those intending to use this XML document in hardware or software products
  are advised that its use may infringe existing patents. The original
  developers of this XML document and his/her company, the subsequent
  editors and their companies, and ISO/IEC have no liability for use of
  this XML document or modifications thereof in an implementation.

  Copyright is not released for non MPEG-7 conforming products. The
  organizations who contributed to this XML document retain the full right
  to use the code for their own purpose,
  assign or donate their contribution to a third party and inhibit third
  parties from using their contribution for non MPEG-7 conforming products.

  Copyright (c) 1999-2001 ISO/IEC.

  This XML document is provided for informative purposes only. If any parts
  of this XML document contradict the normative part of the corresponding
  standard document then the normative part should be used as the definitive
  specification.
```


Copyright International Organization for Standardization
Not for Resale
Provided by IHS under license with ISO
© ISO/IEC 2009 – All rights reserved

```
This notice must be included in all copies or derivative works.

Modified as part of the development of ISO/IEC 23000-6 Professional Archival
Application Format
Author: Houari Sabirin, Hendry -  Information and Communications University
2008.04.17
********************************************************************** -->
<!-- ############################################################################ -->
<!-- ISO/IEC 15938 Information Technology - Multimedia Content Description -->
<!-- Interface MPEG-7 Description Example developed by MPEG MDS Sub-group, -->
<!-- ############################################################################ -->
<schema targetNamespace="urn:mpeg:mpeg7:schema:2001" xmlns="http://www.w3.org/2001/XMLSchema"
xmlns:mpeg7="urn:mpeg:mpeg7:schema:2001" elementFormDefault="qualified"
attributeFormDefault="unqualified">
    <annotation>
        <documentation>
            This document contains MDS tools defined in ISO/IEC 15938-5
         </documentation>
    </annotation>
    <!-- ################################################################ -->
    <!--  import xml components                                    -->
    <!-- ################################################################ -->
    <import namespace="http://www.w3.org/XML/1998/namespace" schemaLocation="xml-1998.xsd"/>
    <!-- ################################################################ -->
    <!-- include MPEG-7 specific extensions for DDL(ISO/IEC 15938-2) -->
    <!-- ################################################################ -->
    <include schemaLocation="./ddl-2001.xsd"/>
    <!-- ########################################### -->
    <!--  Definition of MPEG-7 Base types (4.2)  -->
    <!-- ########################################### -->
    <!-- Definition of MPEG-7 base type -->
    <complexType name="Mpeg7BaseType" abstract="true">
        <complexContent>
            <restriction base="anyType"/>
        </complexContent>
    </complexType>
    <!-- Definition of generic D -->
    <complexType name="DType" abstract="true">
        <complexContent>
            <extension base="mpeg7:Mpeg7BaseType"/>
        </complexContent>
    </complexType>
    <!-- Definition of generic DS -->
    <complexType name="DSType" abstract="true">
        <complexContent>
            <extension base="mpeg7:Mpeg7BaseType">
                <sequence>
                    <element name="Header" type="mpeg7:HeaderType" minOccurs="0"
maxOccurs="unbounded"/>
                </sequence>
                <attribute name="id" type="ID" use="optional"/>
                <attributeGroup ref="mpeg7:timePropertyGrp"/>
                <attributeGroup ref="mpeg7:mediaTimePropertyGrp"/>
            </extension>
        </complexContent>
    </complexType>
    <!-- Definition of Visual D -->
    <complexType name="VisualDType" abstract="true">
        <complexContent>
```

--`,,```,,,,````-`-`,,`,,`,`,,`---

© ISO/IEC 2009 – All rights reserved
Copyright International Organization for Standardization
Not for Resale
Provided by IHS under license with ISO

```
            <extension base="mpeg7:DType"/>
        </complexContent>
    </complexType>
    <!-- Definition of Audio D -->
    <complexType name="AudioDType" abstract="true">
        <complexContent>
            <extension base="mpeg7:DType"/>
        </complexContent>
    </complexType>
    <!-- Definition of Visual DS -->
    <complexType name="VisualDSType" abstract="true">
        <complexContent>
            <extension base="mpeg7:DSType"/>
        </complexContent>
    </complexType>
    <!-- Definition of Audio DS -->
    <complexType name="AudioDSType" abstract="true">
        <complexContent>
            <extension base="mpeg7:DSType"/>
        </complexContent>
    </complexType>
    <!-- Definition of Header datatype -->
    <complexType name="HeaderType" abstract="true">
        <complexContent>
            <extension base="mpeg7:Mpeg7BaseType">
                <attribute name="id" type="ID" use="optional"/>
            </extension>
        </complexContent>
    </complexType>
    <!-- ################################################ -->
    <!--  Definition of MPEG-7 root element (4.3)        -->
    <!-- ################################################ -->
    <!-- Definition of Mpeg7 Type-->
    <complexType name="Mpeg7Type" abstract="true">
        <sequence>
            <element name="DescriptionMetadata" type="mpeg7:DescriptionMetadataType" minOccurs="0"/>
        </sequence>
        <attribute ref="xml:lang" use="optional"/>
        <attributeGroup ref="mpeg7:timePropertyGrp"/>
        <attributeGroup ref="mpeg7:mediaTimePropertyGrp"/>
    </complexType>
    <!-- Definition of Mpeg7 Element -->
    <element name="Mpeg7">
        <complexType>
            <complexContent>
                <extension base="mpeg7:Mpeg7Type">
                    <choice>
                        <element name="DescriptionUnit" type="mpeg7:Mpeg7BaseType"/>
                        <element name="Description" type="mpeg7:CompleteDescriptionType"
maxOccurs="unbounded"/>
                    </choice>
                </extension>
            </complexContent>
        </complexType>
    </element>
    <!-- ############################################################ -->
    <!--  Definition of Complete description top-level types (4.4.2)  -->
    <!-- ############################################################ -->
    <!-- Definition of CompleteDescription Top-level Type -->
    <complexType name="CompleteDescriptionType" abstract="true">
```

--`,,```,,,,````-`-`,,`,,`,`,,`---

Copyright International Organization for Standardization
Not for Resale

Provided by IHS under license with ISO © ISO/IEC 2009 – All rights reserved

```
        <sequence>
            <element name="DescriptionMetadata" type="mpeg7:DescriptionMetadataType" minOccurs="0"/>
            <element name="Relationships" type="mpeg7:GraphType" minOccurs="0"
maxOccurs="unbounded"/>
            <element name="OrderingKey" type="mpeg7:OrderingKeyType" minOccurs="0"
maxOccurs="unbounded"/>
        </sequence>
    </complexType>
    <!-- ################################################################ -->
    <!--  Definition of Content description top-level types (4.4.3)  -->
    <!-- ################################################################ -->
    <!-- Definition of ContentDescription Top-level Type -->
    <complexType name="ContentDescriptionType" abstract="true">
        <complexContent>
            <extension base="mpeg7:CompleteDescriptionType">
                <sequence>
                    <element name="Affective" type="mpeg7:AffectiveType" minOccurs="0"
maxOccurs="unbounded"/>
                </sequence>
            </extension>
        </complexContent>
    </complexType>
    <!-- Definition of ContentEntity Top-level Type -->
    <complexType name="ContentEntityType">
        <complexContent>
            <extension base="mpeg7:ContentDescriptionType">
                <sequence>
                    <element name="MultimediaContent" type="mpeg7:MultimediaContentType"
maxOccurs="unbounded"/>
                </sequence>
            </extension>
        </complexContent>
    </complexType>
    <!-- Definition of ContentAbstraction Top-level Type -->
    <complexType name="ContentAbstractionType" abstract="true">
        <complexContent>
            <extension base="mpeg7:ContentDescriptionType"/>
        </complexContent>
    </complexType>
    <!-- ################################################################ -->
    <!--  Definition of Content management top-level types (4.4.4)  -->
    <!-- ################################################################ -->
    <!-- Definition of ContentManagement Top-level Type -->
    <complexType name="ContentManagementType" abstract="true">
        <complexContent>
            <extension base="mpeg7:CompleteDescriptionType"/>
        </complexContent>
    </complexType>
    <!-- Definition of UserDescription Top-level Type -->
    <complexType name="UserDescriptionType">
        <complexContent>
            <extension base="mpeg7:ContentManagementType">
                <sequence>
                    <element name="User" type="mpeg7:AgentType" minOccurs="0"/>
                    <element name="UsageHistory" type="mpeg7:UsageHistoryType" minOccurs="0"
maxOccurs="unbounded"/>
                </sequence>
            </extension>
        </complexContent>
    </complexType>
```

No reproduction or networking permitted without license from IHS

© ISO/IEC 2009 – All rights reserved
Copyright International Organization for Standardization
Not for Resale
Provided by IHS under license with ISO

```
    <!-- Definition of MediaDescription Top-level Type -->
    <complexType name="MediaDescriptionType">
        <complexContent>
            <extension base="mpeg7:ContentManagementType">
                <sequence>
                    <element name="MediaInformation" type="mpeg7:MediaInformationType"
maxOccurs="unbounded"/>
                </sequence>
            </extension>
        </complexContent>
    </complexType>
    <!-- Definition of CreationDescription Top-level Type -->
    <complexType name="CreationDescriptionType">
        <complexContent>
            <extension base="mpeg7:ContentManagementType">
                <sequence>
                    <element name="CreationInformation" type="mpeg7:CreationInformationType"
maxOccurs="unbounded"/>
                </sequence>
            </extension>
        </complexContent>
    </complexType>
    <!-- Definition of UsageDescription Top-level Type -->
    <complexType name="UsageDescriptionType">
        <complexContent>
            <extension base="mpeg7:ContentManagementType">
                <sequence>
                    <element name="UsageInformation" type="mpeg7:UsageInformationType"
maxOccurs="unbounded"/>
                </sequence>
            </extension>
        </complexContent>
    </complexType>
    <!-- Definition of ClassificationSchemeDescription Top-level Type -->
    <complexType name="ClassificationSchemeDescriptionType">
        <complexContent>
            <extension base="mpeg7:ContentManagementType">
                <choice>
                    <element name="ClassificationScheme" type="mpeg7:ClassificationSchemeType"
maxOccurs="unbounded"/>
                    <element name="ClassificationSchemeBase" type="mpeg7:ClassificationSchemeBaseType"
maxOccurs="unbounded"/>
                </choice>
            </extension>
        </complexContent>
    </complexType>
    <!-- ################################################################ -->
    <!--  Definition of Multimedia content entity tools (4.4.5)  -->
    <!-- ################################################################ -->
    <!-- Definition of MultimediaContent Content Entity -->
    <complexType name="MultimediaContentType" abstract="true">
        <complexContent>
            <extension base="mpeg7:DSType"/>
        </complexContent>
    </complexType>
    <!-- Definition of Image Content Entity -->
    <complexType name="ImageType">
        <complexContent>
            <extension base="mpeg7:MultimediaContentType">
                <sequence>
```

No reproduction or networking permitted without license from IHS

Copyright International Organization for Standardization
Not for Resale
Provided by IHS under license with ISO
© ISO/IEC 2009 – All rights reserved

```
                <element name="Image" type="mpeg7:StillRegionType"/>
            </sequence>
        </extension>
    </complexContent>
</complexType>
<!-- Definition of Video Content Entity -->
<complexType name="VideoType">
    <complexContent>
        <extension base="mpeg7:MultimediaContentType">
            <sequence>
                <element name="Video" type="mpeg7:VideoSegmentType"/>
            </sequence>
        </extension>
    </complexContent>
</complexType>
<!-- Definition of Audio Content Entity -->
<complexType name="AudioType">
    <complexContent>
        <extension base="mpeg7:MultimediaContentType">
            <sequence>
                <element name="Audio" type="mpeg7:AudioSegmentType"/>
            </sequence>
        </extension>
    </complexContent>
</complexType>
<!-- Definition of AudioVisual Content Entity -->
<complexType name="AudioVisualType">
    <complexContent>
        <extension base="mpeg7:MultimediaContentType">
            <sequence>
                <element name="AudioVisual" type="mpeg7:AudioVisualSegmentType"/>
            </sequence>
        </extension>
    </complexContent>
</complexType>
<!-- Definition of Multimedia Content Entity -->
<complexType name="MultimediaType">
    <complexContent>
        <extension base="mpeg7:MultimediaContentType">
            <sequence>
                <element name="Multimedia" type="mpeg7:MultimediaSegmentType"/>
            </sequence>
        </extension>
    </complexContent>
</complexType>
<!-- Definition of Signal Content Entity -->
<complexType name="SignalType">
    <complexContent>
        <extension base="mpeg7:MultimediaContentType">
            <choice>
                <element name="ImageSignal" type="mpeg7:StillRegionType"/>
                <element name="VideoSignal" type="mpeg7:VideoSegmentType"/>
                <element name="AudioSignal" type="mpeg7:AudioSegmentType"/>
                <element name="SignalRef" type="mpeg7:ReferenceType"/>
            </choice>
        </extension>
    </complexContent>
</complexType>
<!-- ######################################## -->
<!--  Definition of Package DS (4.5.2)   -->
```

© ISO/IEC 2009 – All rights reserved
Provided by IHS under license with ISO
Copyright International Organization for Standardization
Not for Resale

```
    <!-- ################################### -->
    <!-- Definition of Package DS -->
    <complexType name="PackageType">
        <complexContent>
            <extension base="mpeg7:DSType">
                <choice minOccurs="0" maxOccurs="unbounded">
                    <element name="Scheme">
                        <complexType>
                            <attribute name="name" type="QName" use="required"/>
                        </complexType>
                    </element>
                    <element name="Package" type="mpeg7:PackageType"/>
                </choice>
                <attribute name="name" type="string" use="required"/>
            </extension>
        </complexContent>
    </complexType>
    <!-- ################################################## -->
    <!--  Definition of DescriptionMetadata Header (4.5.3)  -->
    <!-- ################################################## -->
    <!-- Definition of DescriptionMetadata Header -->
    <complexType name="DescriptionMetadataType">
        <complexContent>
            <extension base="mpeg7:HeaderType">
                <sequence>
                    <element name="Confidence" type="mpeg7:zeroToOneType" minOccurs="0"/>
                    <element name="Version" type="string" minOccurs="0"/>
                    <element name="LastUpdate" type="mpeg7:timePointType" minOccurs="0"/>
                    <element name="Comment" type="mpeg7:TextAnnotationType" minOccurs="0"/>
                    <element name="PublicIdentifier" type="mpeg7:UniqueIDType" minOccurs="0"
maxOccurs="unbounded"/>
                    <element name="PrivateIdentifier" type="string" minOccurs="0" maxOccurs="unbounded"/>
                    <element name="Creator" type="mpeg7:CreatorType" minOccurs="0"
maxOccurs="unbounded"/>
                    <element name="CreationLocation" type="mpeg7:PlaceType" minOccurs="0"/>
                    <element name="CreationTime" type="mpeg7:timePointType" minOccurs="0"/>
                    <element name="Instrument" type="mpeg7:CreationToolType" minOccurs="0"
maxOccurs="unbounded"/>
                    <element name="Rights" type="mpeg7:RightsType" minOccurs="0"/>
                    <element name="Package" type="mpeg7:PackageType" minOccurs="0"/>
                </sequence>
            </extension>
        </complexContent>
    </complexType>
    <!-- ########################################### -->
    <!--  Definition of Unsigned datatypes (5.2.2)  -->
    <!-- ########################################### -->
    <!-- Definition of unsigned1 datatype -->
    <simpleType name="unsigned1">
        <restriction base="nonNegativeInteger">
            <minInclusive value="0"/>
            <maxInclusive value="1"/>
        </restriction>
    </simpleType>
    <!-- Definition of unsigned2 datatype -->
    <simpleType name="unsigned2">
        <restriction base="nonNegativeInteger">
            <minInclusive value="0"/>
            <maxInclusive value="3"/>
        </restriction>
```


Copyright International Organization for Standardization
Not for Resale
Provided by IHS under license with ISO
© ISO/IEC 2009 – All rights reserved

```
    </simpleType>
    <!-- Definition of unsigned3 datatype -->
    <simpleType name="unsigned3">
        <restriction base="nonNegativeInteger">
            <minInclusive value="0"/>
            <maxInclusive value="7"/>
        </restriction>
    </simpleType>
    <!-- Definition of unsigned4 datatype -->
    <simpleType name="unsigned4">
        <restriction base="nonNegativeInteger">
            <minInclusive value="0"/>
            <maxInclusive value="15"/>
        </restriction>
    </simpleType>
    <!-- Definition of unsigned5 datatype -->
    <simpleType name="unsigned5">
        <restriction base="nonNegativeInteger">
            <minInclusive value="0"/>
            <maxInclusive value="31"/>
        </restriction>
    </simpleType>
    <!-- Definition of unsigned6 datatype -->
    <simpleType name="unsigned6">
        <restriction base="nonNegativeInteger">
            <minInclusive value="0"/>
            <maxInclusive value="63"/>
        </restriction>
    </simpleType>
    <!-- Definition of unsigned7 datatype -->
    <simpleType name="unsigned7">
        <restriction base="nonNegativeInteger">
            <minInclusive value="0"/>
            <maxInclusive value="127"/>
        </restriction>
    </simpleType>
    <!-- Definition of unsigned8 datatype -->
    <simpleType name="unsigned8">
        <restriction base="nonNegativeInteger">
            <minInclusive value="0"/>
            <maxInclusive value="255"/>
        </restriction>
    </simpleType>
    <!-- Definition of unsigned9 datatype -->
    <simpleType name="unsigned9">
        <restriction base="nonNegativeInteger">
            <minInclusive value="0"/>
            <maxInclusive value="511"/>
        </restriction>
    </simpleType>
    <!-- Definition of unsigned10 datatype -->
    <simpleType name="unsigned10">
        <restriction base="nonNegativeInteger">
            <minInclusive value="0"/>
            <maxInclusive value="1023"/>
        </restriction>
    </simpleType>
    <!-- Definition of unsigned11 datatype -->
    <simpleType name="unsigned11">
        <restriction base="nonNegativeInteger">
```

--`,,```,,,,````-`-`,,`,,`,`,,`---

© ISO/IEC 2009 – All rights reserved
Copyright International Organization for Standardization
Not for Resale

Provided by IHS under license with ISO

```
            <minInclusive value="0"/>
            <maxInclusive value="2047"/>
        </restriction>
    </simpleType>
    <!-- Definition of unsigned12 datatype -->
    <simpleType name="unsigned12">
        <restriction base="nonNegativeInteger">
            <minInclusive value="0"/>
            <maxInclusive value="4095"/>
        </restriction>
    </simpleType>
    <!-- Definition of unsigned13 datatype -->
    <simpleType name="unsigned13">
        <restriction base="nonNegativeInteger">
            <minInclusive value="0"/>
            <maxInclusive value="8191"/>
        </restriction>
    </simpleType>
    <!-- Definition of unsigned14 datatype -->
    <simpleType name="unsigned14">
        <restriction base="nonNegativeInteger">
            <minInclusive value="0"/>
            <maxInclusive value="16383"/>
        </restriction>
    </simpleType>
    <!-- Definition of unsigned15 datatype -->
    <simpleType name="unsigned15">
        <restriction base="nonNegativeInteger">
            <minInclusive value="0"/>
            <maxInclusive value="32767"/>
        </restriction>
    </simpleType>
    <!-- Definition of unsigned16 datatype -->
    <simpleType name="unsigned16">
        <restriction base="nonNegativeInteger">
            <minInclusive value="0"/>
            <maxInclusive value="65535"/>
        </restriction>
    </simpleType>
    <!-- Definition of unsigned17 datatype -->
    <simpleType name="unsigned17">
        <restriction base="nonNegativeInteger">
            <minInclusive value="0"/>
            <maxInclusive value="131071"/>
        </restriction>
    </simpleType>
    <!-- Definition of unsigned18 datatype -->
    <simpleType name="unsigned18">
        <restriction base="nonNegativeInteger">
            <minInclusive value="0"/>
            <maxInclusive value="262143"/>
        </restriction>
    </simpleType>
    <!-- Definition of unsigned19 datatype -->
    <simpleType name="unsigned19">
        <restriction base="nonNegativeInteger">
            <minInclusive value="0"/>
            <maxInclusive value="524287"/>
        </restriction>
    </simpleType>
```

--`,,```,,,,````-`-`,,`,,`,`,,`---

Copyright International Organization for Standardization
Not for Resale

Provided by IHS under license with ISO © ISO/IEC 2009 – All rights reserved

```
<!-- Definition of unsigned20 datatype -->
<simpleType name="unsigned20">
    <restriction base="nonNegativeInteger">
        <minInclusive value="0"/>
        <maxInclusive value="1048575"/>
    </restriction>
</simpleType>
<!-- Definition of unsigned21 datatype -->
<simpleType name="unsigned21">
    <restriction base="nonNegativeInteger">
        <minInclusive value="0"/>
        <maxInclusive value="2097151"/>
    </restriction>
</simpleType>
<!-- Definition of unsigned22 datatype -->
<simpleType name="unsigned22">
    <restriction base="nonNegativeInteger">
        <minInclusive value="0"/>
        <maxInclusive value="4194303"/>
    </restriction>
</simpleType>
<!-- Definition of unsigned23 datatype -->
<simpleType name="unsigned23">
    <restriction base="nonNegativeInteger">
        <minInclusive value="0"/>
        <maxInclusive value="8388607"/>
    </restriction>
</simpleType>
<!-- Definition of unsigned24 datatype -->
<simpleType name="unsigned24">
    <restriction base="nonNegativeInteger">
        <minInclusive value="0"/>
        <maxInclusive value="16777215"/>
    </restriction>
</simpleType>
<!-- Definition of unsigned25 datatype -->
<simpleType name="unsigned25">
    <restriction base="nonNegativeInteger">
        <minInclusive value="0"/>
        <maxInclusive value="33554431"/>
    </restriction>
</simpleType>
<!-- Definition of unsigned26 datatype -->
<simpleType name="unsigned26">
    <restriction base="nonNegativeInteger">
        <minInclusive value="0"/>
        <maxInclusive value="67108863"/>
    </restriction>
</simpleType>
<!-- Definition of unsigned27 datatype -->
<simpleType name="unsigned27">
    <restriction base="nonNegativeInteger">
        <minInclusive value="0"/>
        <maxInclusive value="134217727"/>
    </restriction>
</simpleType>
<!-- Definition of unsigned28 datatype -->
<simpleType name="unsigned28">
    <restriction base="nonNegativeInteger">
        <minInclusive value="0"/>
```

No reproduction or networking permitted without license from IHS

© ISO/IEC 2009 – All rights reserved
Copyright International Organization for Standardization
Not for Resale
Provided by IHS under license with ISO

```
            <maxInclusive value="268435455"/>
        </restriction>
    </simpleType>
    <!-- Definition of unsigned29 datatype -->
    <simpleType name="unsigned29">
        <restriction base="nonNegativeInteger">
            <minInclusive value="0"/>
            <maxInclusive value="536870911"/>
        </restriction>
    </simpleType>
    <!-- Definition of unsigned30 datatype -->
    <simpleType name="unsigned30">
        <restriction base="nonNegativeInteger">
            <minInclusive value="0"/>
            <maxInclusive value="1073741823"/>
        </restriction>
    </simpleType>
    <!-- Definition of unsigned31 datatype -->
    <simpleType name="unsigned31">
        <restriction base="nonNegativeInteger">
            <minInclusive value="0"/>
            <maxInclusive value="2147483647"/>
        </restriction>
    </simpleType>
    <!-- Definition of unsigned32 datatype -->
    <simpleType name="unsigned32">
        <restriction base="nonNegativeInteger">
            <minInclusive value="0"/>
            <maxInclusive value="4294967295"/>
        </restriction>
    </simpleType>
    <!-- ################################################ -->
    <!--  Definition of zeroToOne datatype (5.3.2)  -->
    <!-- ################################################ -->
    <!-- Definition of zeroToOne datatype -->
    <simpleType name="zeroToOneType">
        <restriction base="float">
            <minInclusive value="0.0"/>
            <maxInclusive value="1.0"/>
        </restriction>
    </simpleType>
    <!-- ################################################  -->
    <!--  Definition of minusOneToOne datatype (5.3.3)  -->
    <!-- ################################################  -->
    <!-- Definition of minusOneToOne datatype -->
    <simpleType name="minusOneToOneType">
        <restriction base="float">
            <minInclusive value="-1.0"/>
            <maxInclusive value="+1.0"/>
        </restriction>
    </simpleType>
    <!-- ################################################  -->
    <!--  Definition of nonNegativeReal datatype (5.3.4)  -->
    <!-- ################################################  -->
    <!-- Definition of nonNegativeReal datatype -->
    <simpleType name="nonNegativeReal">
        <restriction base="double">
            <minInclusive value="0.0"/>
        </restriction>
    </simpleType>
```


Copyright International Organization for Standardization
Not for Resale
Provided by IHS under license with ISO
© ISO/IEC 2009 – All rights reserved

```
<!-- ########################################### -->
<!--  Definition of vector datatypes  (5.4.2)  -->
<!-- ########################################### -->
<!-- Definition of integerVector datatype -->
<simpleType name="integerVector">
    <list itemType="integer"/>
</simpleType>
<!-- Definition of floatVector datatype -->
<simpleType name="floatVector">
    <list itemType="float"/>
</simpleType>
<!-- Definition of doubleVector datatype -->
<simpleType name="doubleVector">
    <list itemType="double"/>
</simpleType>
<!-- ########################################################## -->
<!--  Definition of minusOneToOneVector datatype (5.4.3)  -->
<!-- ########################################################## -->
<!-- Definition of minusOneToOneVector datatype -->
<simpleType name="minusOneToOneVector">
    <list>
        <simpleType>
            <restriction base="float">
                <minInclusive value="-1.0"/>
                <maxInclusive value="1.0"/>
            </restriction>
        </simpleType>
    </list>
</simpleType>
<!-- ########################################  -->
<!--  Definition of Matrix datatypes (5.4.4)  -->
<!-- ########################################  -->
<!-- Definition of IntegerMatrix datatype -->
<complexType name="IntegerMatrixType">
    <simpleContent>
        <extension base="mpeg7:integerVector">
            <attribute ref="mpeg7:dim" use="required"/>
        </extension>
    </simpleContent>
</complexType>
<!-- Definition of FloatMatrix datatype -->
<complexType name="FloatMatrixType">
    <simpleContent>
        <extension base="mpeg7:floatVector">
            <attribute ref="mpeg7:dim" use="required"/>
        </extension>
    </simpleContent>
</complexType>
<!-- Definition of DoubleMatrix datatype -->
<complexType name="DoubleMatrixType">
    <simpleContent>
        <extension base="mpeg7:doubleVector">
            <attribute ref="mpeg7:dim" use="required"/>
        </extension>
    </simpleContent>
</complexType>
<!-- ################################################  -->
<!--  Definition of DiagonalMatrix datatypes (5.4.5)  -->
<!-- ################################################  -->
<!-- Definition of IntegerDiagonalMatrix datatype -->
```

No reproduction or networking permitted without license from IHS

© ISO/IEC 2009 – All rights reserved
Copyright International Organization for Standardization
Not for Resale
Provided by IHS under license with ISO

```
<complexType name="IntegerDiagonalMatrixType">
    <simpleContent>
        <extension base="mpeg7:integerVector">
            <attribute ref="mpeg7:dim" use="required"/>
        </extension>
    </simpleContent>
</complexType>
<!-- Definition of FloatDiagonalMatrix datatype -->
<complexType name="FloatDiagonalMatrixType">
    <simpleContent>
        <extension base="mpeg7:floatVector">
            <attribute ref="mpeg7:dim" use="required"/>
        </extension>
    </simpleContent>
</complexType>
<!-- Definition of DoubleDiagonalMatrix datatype -->
<complexType name="DoubleDiagonalMatrixType">
    <simpleContent>
        <extension base="mpeg7:doubleVector">
            <attribute ref="mpeg7:dim" use="required"/>
        </extension>
    </simpleContent>
</complexType>
<!-- ########################################################  -->
<!--  Definition of MinusOneToOneMatrix datatype (5.4.6)   -->
<!-- ########################################################  -->
<!-- Definition of MinusOneToOneMatrix datatype -->
<complexType name="MinusOneToOneMatrixType">
    <simpleContent>
        <extension base="mpeg7:minusOneToOneVector">
            <attribute ref="mpeg7:dim" use="required"/>
        </extension>
    </simpleContent>
</complexType>
<!-- ######################################################## -->
<!--  Definition of probablityVector datatype (5.5.2)  -->
<!-- ######################################################## -->
<!-- Definition of probabilityVector datatype -->
<simpleType name="probabilityVector">
    <list>
        <simpleType>
            <restriction base="float">
                <minInclusive value="0.0"/>
                <maxInclusive value="1.0"/>
            </restriction>
        </simpleType>
    </list>
</simpleType>
<!-- ######################################################## -->
<!--  Definition of ProbabilityMatrix datatype (5.5.3)  -->
<!-- ######################################################## -->
<!-- Definition of probabilityMatrix datatype -->
<complexType name="ProbabilityMatrixType">
    <simpleContent>
        <extension base="mpeg7:probabilityVector">
            <attribute ref="mpeg7:dim" use="required"/>
        </extension>
    </simpleContent>
</complexType>
<!-- ########################################### -->
```

No reproduction or networking permitted without license from IHS

Copyright International Organization for Standardization
Not for Resale
Provided by IHS under license with ISO
© ISO/IEC 2009 – All rights reserved

```
    <!--  Definition of mimeType datatype (5.6.2)  -->
    <!-- ################################################ -->
    <!-- Definition of mimeType datatype -->
    <simpleType name="mimeType">
        <restriction base="string">
            <whiteSpace value="collapse"/>
            <pattern value='[&#x21;-&#x7f;-[\(\)&lt;&gt;@,;:\\"/\[\]\?=]]+/[&#x21;-&#x7f;-
[\(\)&lt;&gt;@,;:\\"/\[\]\?=]]+'/>
        </restriction>
    </simpleType>
    <!-- ################################################ -->
    <!--  Definition of countryCode datatype (5.6.3)  -->
    <!-- ################################################ -->
    <!-- Definition of countryCode datatype -->
    <simpleType name="countryCode">
        <restriction base="string">
            <whiteSpace value="collapse"/>
            <pattern value="[a-zA-Z]{2}"/>
        </restriction>
    </simpleType>
    <!-- ################################################ -->
    <!--  Definition of regionCode datatype (5.6.4)  -->
    <!-- ################################################ -->
    <!-- Definition of regionCode datatype -->
    <simpleType name="regionCode">
        <restriction base="string">
            <whiteSpace value="collapse"/>
            <pattern value="[a-zA-Z]{2}(-[a-zA-Z0-9]{1,3})?"/>
        </restriction>
    </simpleType>
    <!-- ################################################ -->
    <!--  Definition of currencyCode datatype (5.6.5)  -->
    <!-- ################################################ -->
    <!-- Definition of currencyCode datatype -->
    <simpleType name="currencyCode">
        <restriction base="string">
            <whiteSpace value="collapse"/>
            <pattern value="[a-zA-Z]{3}"/>
        </restriction>
    </simpleType>
    <!-- ################################################ -->
    <!--  Definition of characterSetCode datatype (5.6.6)  -->
    <!-- ################################################ -->
    <!-- Definition of characterSetCode datatype -->
    <simpleType name="characterSetCode">
        <restriction base="string"/>
    </simpleType>
    <!-- ################################################ -->
    <!--  Definition of Reference datatypes (6.2.1)  -->
    <!-- ################################################ -->
    <!-- Definition of referenceGrp attribute group -->
    <attributeGroup name="referenceGrp">
        <attribute name="idref" type="IDREF" use="optional"/>
        <attribute name="xpath" type="mpeg7:xPathRefType" use="optional"/>
        <attribute name="href" type="anyURI" use="optional"/>
    </attributeGroup>
    <!-- Definition of Reference datatype -->
    <complexType name="ReferenceType">
        <attributeGroup ref="mpeg7:referenceGrp"/>
    </complexType>
```

© ISO/IEC 2009 – All rights reserved
Copyright International Organization for Standardization
Not for Resale
Provided by IHS under license with ISO

```
    <!-- ########################################## -->
    <!--  Definition of xPath datatypes (6.2.2)  -->
    <!-- ########################################## -->
    <!-- Definition of xPath datatype -->
    <simpleType name="xPathType">
        <restriction base="token"/>
    </simpleType>
    <!-- Definition of xPathRef datatype -->
    <simpleType name="xPathRefType">
        <restriction base="mpeg7:xPathType">
            <pattern
value="/?((((child::)?((\i\c*:)?(\i\c*)(\[\d+\])?))|\.|(\.\.))/)*((((child::)?((\i\c*:)?(\i\c*)(\[\d+\])?))|\.)|((attribute::|@)((\i\c*
:)?(\i\c*|\*))))"/>
        </restriction>
    </simpleType>
    <!-- Definition of xPathSelector datatype -->
    <simpleType name="xPathSelectorType">
        <restriction base="mpeg7:xPathType">
            <pattern
value="(/|(((//|/)?(((child::)?((\i\c*:)?(\i\c*|\*)))|\.|\.\.)(((//|/)(((child::)?((\i\c*:)?(\i\c*|\*)))|\.|\.\.))*))(\|/|(((//|/)?(((child::)?((\i
\c*:)?(\i\c*|\*)))|\.|\.\.)(((//|/)(((child::)?((\i\c*:)?(\i\c*|\*)))|\.|\.\.))*))*"/>
        </restriction>
    </simpleType>
    <!-- Definition of xPathAbsoluteSelector datatype -->
    <simpleType name="xPathAbsoluteSelectorType">
        <restriction base="mpeg7:xPathSelectorType">
            <pattern value="(/|(((//|/)(((child::)?((\i\c*:)?(\i\c*|\*)))|\.))*)(\|(/|(((//|/)(((child::)?((\i\c*:)?(\i\c*|\*)))|\.))*))*"/>
        </restriction>
    </simpleType>
    <!-- Definition of xPathField datatype -->
    <simpleType name="xPathFieldType">
        <restriction base="mpeg7:xPathType">
            <pattern
value="(\.//)?((((child::)?((\i\c*:)?(\i\c*|\*)))|\.)/)*((((child::)?((\i\c*:)?(\i\c*|\*)))|\.)|((attribute::|@)((\i\c*:)?(\i\c*|\*))))(\|
(\.//)?((((child::)?((\i\c*:)?(\i\c*|\*)))|\.)/)*((((child::)?((\i\c*:)?(\i\c*|\*)))|\.)|((attribute::|@)((\i\c*:)?(\i\c*|\*)))))*"/>
        </restriction>
    </simpleType>
    <!-- ########################################## -->
    <!--  Definition of UniqueID datatype (6.3.1)  -->
    <!-- ########################################## -->
    <!-- Definition of UniqueID datatype -->
    <complexType name="UniqueIDType">
        <simpleContent>
            <extension base="string">
                <attribute name="type" type="NMTOKEN" use="optional" default="URI"/>
                <attribute name="organization" type="NMTOKEN" use="optional"/>
                <attribute name="authority" type="NMTOKEN" use="optional"/>
                <attribute name="encoding" use="optional" default="text">
                    <simpleType>
                        <restriction base="string">
                            <enumeration value="text"/>
                            <enumeration value="base16"/>
                            <enumeration value="base64"/>
                        </restriction>
                    </simpleType>
                </attribute>
            </extension>
        </simpleContent>
    </complexType>
    <!-- ########################################## -->
```

No reproduction or networking permitted without license from IHS

Copyright International Organization for Standardization
Not for Resale
Provided by IHS under license with ISO
© ISO/IEC 2009 – All rights reserved

```
    <!--  Definition of Time datatype (6.4.2)  -->
    <!-- ######################################## -->
    <!-- Definition of Time datatype -->
    <complexType name="TimeType">
        <sequence>
            <choice>
                <element name="TimePoint" type="mpeg7:timePointType"/>
                <element name="RelTimePoint" type="mpeg7:RelTimePointType"/>
                <element name="RelIncrTimePoint" type="mpeg7:RelIncrTimePointType"/>
            </choice>
            <choice minOccurs="0">
                <element name="Duration" type="mpeg7:durationType"/>
                <element name="IncrDuration" type="mpeg7:IncrDurationType"/>
            </choice>
        </sequence>
    </complexType>
    <!-- ######################################## -->
    <!--  Definition of timePoint datatype (6.4.3)  -->
    <!-- ######################################## -->
    <!-- Definition of timePoint datatype -->
    <simpleType name="timePointType">
        <restriction base="mpeg7:basicTimePointType">
            <pattern value="(\-?\d+(\-\d{2}(\-\d{2})?)?)?(T\d{2}(:\d{2}(:\d{2}(:\d+)?)?)?)?(F\d+)?((\-
|\+)\d{2}:\d{2})?"/>
        </restriction>
    </simpleType>
    <!-- ######################################## -->
    <!--  Definition of duration datatype (6.4.4)  -->
    <!-- ######################################## -->
    <!-- Definition of duration datatype -->
    <simpleType name="durationType">
        <restriction base="mpeg7:basicDurationType">
            <pattern value="\-?P(\d+D)?(T(\d+H)?(\d+M)?(\d+S)?(\d+N)?)?(\d+F)?((\-|\+)\d{2}:\d{2}Z)?"/>
        </restriction>
    </simpleType>
    <!-- ################################################ -->
    <!--  Definition of IncrDuration datatype (6.4.5)  -->
    <!-- ################################################ -->
    <!-- Definition of IncrDuration datatype -->
    <complexType name="IncrDurationType">
        <simpleContent>
            <extension base="integer">
                <attribute name="timeUnit" type="mpeg7:durationType" use="optional"/>
            </extension>
        </simpleContent>
    </complexType>
    <!-- ################################################ -->
    <!--  Definition of RelTimePoint datatypes (6.4.6)  -->
    <!-- ################################################ -->
    <!-- Definition of timeOffsetType datatype -->
    <simpleType name="timeOffsetType">
        <restriction base="mpeg7:basicDurationType">
            <pattern value="\-?P(\d+D)?(T(\d+H)?(\d+M)?(\d+S)?(\d+N)?)?(\d+F)?((\-|\+)\d{2}:\d{2}Z)?"/>
        </restriction>
    </simpleType>
    <!-- Definition of RelTimePointType datatype -->
    <complexType name="RelTimePointType">
        <simpleContent>
            <extension base="mpeg7:timeOffsetType">
                <attribute name="timeBase" type="mpeg7:xPathRefType" use="optional"/>
```

© ISO/IEC 2009 – All rights reserved
Copyright International Organization for Standardization
Not for Resale
Provided by IHS under license with ISO

```
            </extension>
        </simpleContent>
    </complexType>
    <!-- ################################################ -->
    <!--  Definition of RelIncrTimePoint datatype (6.4.7)  -->
    <!-- ################################################ -->
    <!-- Definition of RelIncrTimePointType datatype -->
    <complexType name="RelIncrTimePointType">
        <simpleContent>
            <extension base="integer">
                <attribute name="timeUnit" type="mpeg7:durationType" use="optional"/>
                <attribute name="timeBase" type="mpeg7:xPathRefType" use="optional"/>
            </extension>
        </simpleContent>
    </complexType>
    <!-- ################################################ -->
    <!--  Definition of timeProperty attribute group (6.4.8)  -->
    <!-- ################################################ -->
    <!-- Definition of timePropertyGrp attribute group -->
    <attributeGroup name="timePropertyGrp">
        <attribute name="timeBase" type="mpeg7:xPathRefType" use="optional"/>
        <attribute name="timeUnit" type="mpeg7:durationType" use="optional"/>
    </attributeGroup>
    <!-- ################################################ -->
    <!--  Definition of MediaTime datatype (6.4.10)  -->
    <!-- ################################################ -->
    <!-- Definition of MediaTime datatype -->
    <complexType name="MediaTimeType">
        <sequence>
            <choice>
                <element name="MediaTimePoint" type="mpeg7:mediaTimePointType"/>
                <element name="MediaRelTimePoint" type="mpeg7:MediaRelTimePointType"/>
                <element name="MediaRelIncrTimePoint" type="mpeg7:MediaRelIncrTimePointType"/>
            </choice>
            <choice minOccurs="0">
                <element name="MediaDuration" type="mpeg7:mediaDurationType"/>
                <element name="MediaIncrDuration" type="mpeg7:MediaIncrDurationType"/>
            </choice>
        </sequence>
    </complexType>
    <!-- ################################################ -->
    <!--  Definition of mediaTimePoint datatype (6.4.11)  -->
    <!-- ################################################ -->
    <!-- Definition of mediaTimePoint datatype -->
    <simpleType name="mediaTimePointType">
        <restriction base="mpeg7:basicTimePointType">
            <pattern value="(\-?\d+(\-\d{2}(\-\d{2})?)?)?(T\d{2}(:\d{2}(:\d{2}(:\d+)?)?)?)?(F\d+)?"/>
        </restriction>
    </simpleType>
    <!-- ################################################ -->
    <!--  Definition of mediaDuration datatype (6.4.12)  -->
    <!-- ################################################ -->
    <!-- Definition of mediaDuration datatype -->
    <simpleType name="mediaDurationType">
        <restriction base="mpeg7:basicDurationType">
            <pattern value="\-?P(\d+D)?(T(\d+H)?(\d+M)?(\d+S)?(\d+N)?)?(\d+F)?"/>
        </restriction>
    </simpleType>
    <!-- ################################################ -->
    <!--  Definition of MediaIncrDuration datatype (6.4.13)  -->
```

No reproduction or networking permitted without license from IHS

Copyright International Organization for Standardization
Not for Resale
Provided by IHS under license with ISO
© ISO/IEC 2009 – All rights reserved

```
<!-- ########################################################## -->
<!-- Definition of MediaIncrDuration datatype -->
<complexType name="MediaIncrDurationType">
    <simpleContent>
        <extension base="integer">
            <attribute name="mediaTimeUnit" type="mpeg7:mediaDurationType" use="optional"/>
        </extension>
    </simpleContent>
</complexType>
<!-- ########################################################## -->
<!--  Definition of MediaRelTimePoint datatype (6.4.14)  -->
<!-- ########################################################## -->
<!-- Definition of mediaTimeOffset datatype -->
<simpleType name="mediaTimeOffsetType">
    <restriction base="mpeg7:basicDurationType">
        <pattern value="\-?P(\d+D)?(T(\d+H)?(\d+M)?(\d+S)?(\d+N)?)?(\d+F)?"/>
    </restriction>
</simpleType>
<!-- Definition of MediaRelTimePoint datatype -->
<complexType name="MediaRelTimePointType">
    <simpleContent>
        <extension base="mpeg7:mediaTimeOffsetType">
            <attribute name="mediaTimeBase" type="mpeg7:xPathRefType" use="optional"/>
        </extension>
    </simpleContent>
</complexType>
<!-- ########################################################## -->
<!--  Definition of MediaRelIncrTimePoint datatype (6.4.15)  -->
<!-- ########################################################## -->
<!-- Definition of MediaRelIncrTimePoint datatype -->
<complexType name="MediaRelIncrTimePointType">
    <simpleContent>
        <extension base="integer">
            <attribute name="mediaTimeUnit" type="mpeg7:mediaDurationType" use="optional"/>
            <attribute name="mediaTimeBase" type="mpeg7:xPathRefType" use="optional"/>
        </extension>
    </simpleContent>
</complexType>
<!-- ########################################################## -->
<!--  Definition of mediaTimeProperty attribute group (6.4.16)  -->
<!-- ########################################################## -->
<!-- Definition of mediaTimePropertyGrp attribute group -->
<attributeGroup name="mediaTimePropertyGrp">
    <attribute name="mediaTimeBase" type="mpeg7:xPathRefType" use="optional"/>
    <attribute name="mediaTimeUnit" type="mpeg7:mediaDurationType" use="optional"/>
</attributeGroup>
<!-- ################################################ -->
<!--  Definition of MediaLocator datatype (6.5.2)  -->
<!-- ################################################ -->
<!-- Definition of MediaLocator datatype -->
<complexType name="MediaLocatorType">
    <sequence>
        <choice minOccurs="0">
            <element name="MediaUri" type="anyURI"/>
            <element name="InlineMedia" type="mpeg7:InlineMediaType"/>
        </choice>
        <element name="StreamID" type="nonNegativeInteger" minOccurs="0"/>
    </sequence>
</complexType>
<!-- ################################################ -->
```

© ISO/IEC 2009 – All rights reserved
Copyright International Organization for Standardization
Not for Resale
Provided by IHS under license with ISO

```
<!--  Definition of InlineMedia datatype (6.5.3)  -->
<!-- ################################################ -->
<!-- Definition of InlineMedia datatype -->
<complexType name="InlineMediaType">
    <choice>
        <element name="MediaData16" type="hexBinary"/>
        <element name="MediaData64" type="base64Binary"/>
    </choice>
    <attribute name="type" type="mpeg7:mimeType" use="required"/>
</complexType>
<!-- ################################################################ -->
<!--  Definition of TemporalSegmentLocator datatype (6.5.4)  -->
<!-- ################################################################ -->
<!-- Definition of TemporalSegmentLocator datatype -->
<complexType name="TemporalSegmentLocatorType">
    <complexContent>
        <extension base="mpeg7:MediaLocatorType">
            <choice minOccurs="0">
                <element name="MediaTime" type="mpeg7:MediaTimeType"/>
                <element name="BytePosition">
                    <complexType>
                        <attribute name="offset" type="nonNegativeInteger" use="required"/>
                        <attribute name="length" type="positiveInteger" use="optional"/>
                    </complexType>
                </element>
            </choice>
        </extension>
    </complexContent>
</complexType>
<!-- ################################################ -->
<!--  Definition of ImageLocator datatype (6.5.5)  -->
<!-- ################################################ -->
<!-- Definition of ImageLocator datatype -->
<complexType name="ImageLocatorType">
    <complexContent>
        <extension base="mpeg7:MediaLocatorType">
            <choice minOccurs="0">
                <element name="MediaTimePoint" type="mpeg7:mediaTimePointType"/>
                <element name="MediaRelTimePoint" type="mpeg7:MediaRelTimePointType"/>
                <element name="MediaRelIncrTimePoint" type="mpeg7:MediaRelIncrTimePointType"/>
                <element name="BytePosition">
                    <complexType>
                        <attribute name="offset" type="nonNegativeInteger" use="required"/>
                        <attribute name="length" type="positiveInteger" use="optional"/>
                    </complexType>
                </element>
            </choice>
        </extension>
    </complexContent>
</complexType>
<!-- ########################################### -->
<!--  Definition of Textual datatypes (7.2.2)  -->
<!-- ########################################### -->
<!-- Definition of TextualBase datatype -->
<complexType name="TextualBaseType" abstract="true">
    <simpleContent>
        <extension base="string">
            <attribute ref="xml:lang" use="optional"/>
        </extension>
    </simpleContent>
```


Copyright International Organization for Standardization
Not for Resale
Provided by IHS under license with ISO
© ISO/IEC 2009 – All rights reserved

```
    </complexType>
    <!-- Definition of Textual datatype -->
    <complexType name="TextualType">
        <simpleContent>
            <extension base="mpeg7:TextualBaseType"/>
        </simpleContent>
    </complexType>
    <!-- ################################################  -->
    <!--  Definition of TextAnnotation datatype (7.2.3)  -->
    <!-- ################################################  -->
    <!-- Definition of TextAnnotation datatype -->
    <complexType name="TextAnnotationType">
        <choice maxOccurs="unbounded">
            <element name="FreeTextAnnotation" type="mpeg7:TextualType"/>
            <element name="StructuredAnnotation" type="mpeg7:StructuredAnnotationType"/>
            <element name="DependencyStructure" type="mpeg7:DependencyStructureType"/>
            <element name="KeywordAnnotation" type="mpeg7:KeywordAnnotationType"/>
        </choice>
        <attribute name="relevance" type="mpeg7:zeroToOneType" use="optional"/>
        <attribute name="confidence" type="mpeg7:zeroToOneType" use="optional"/>
        <attribute ref="xml:lang"/>
    </complexType>
    <!-- ########################################################## -->
    <!--  Definition of StructuredAnnotation datatype (7.2.4)  -->
    <!-- ########################################################## -->
    <!-- Definition of StructuredAnnotation datatype -->
    <complexType name="StructuredAnnotationType">
        <sequence>
            <element name="Who" type="mpeg7:TermUseType" minOccurs="0" maxOccurs="unbounded"/>
            <element name="WhatObject" type="mpeg7:TermUseType" minOccurs="0"
maxOccurs="unbounded"/>
            <element name="WhatAction" type="mpeg7:TermUseType" minOccurs="0"
maxOccurs="unbounded"/>
            <element name="Where" type="mpeg7:TermUseType" minOccurs="0" maxOccurs="unbounded"/>
            <element name="When" type="mpeg7:TermUseType" minOccurs="0" maxOccurs="unbounded"/>
            <element name="Why" type="mpeg7:TermUseType" minOccurs="0" maxOccurs="unbounded"/>
            <element name="How" type="mpeg7:TermUseType" minOccurs="0" maxOccurs="unbounded"/>
        </sequence>
        <attribute ref="xml:lang" use="optional"/>
    </complexType>
    <!-- ######################################################## -->
    <!--  Definition of KeywordAnnotation datatype (7.2.5)  -->
    <!-- ######################################################## -->
    <!-- Definition of KeywordAnnotation datatype -->
    <complexType name="KeywordAnnotationType">
        <sequence>
            <element name="Keyword" maxOccurs="unbounded">
                <complexType>
                    <simpleContent>
                        <extension base="mpeg7:TextualType">
                            <attribute name="type" use="optional" default="main">
                                <simpleType>
                                    <restriction base="NMTOKEN">
                                        <enumeration value="main"/>
                                        <enumeration value="secondary"/>
                                        <enumeration value="other"/>
                                    </restriction>
                                </simpleType>
                            </attribute>
                        </extension>
```

© ISO/IEC 2009 – All rights reserved
Copyright International Organization for Standardization
Not for Resale
Provided by IHS under license with ISO

```
                </simpleContent>
            </complexType>
        </element>
    </sequence>
    <attribute ref="xml:lang" use="optional"/>
</complexType>
<!-- ########################################################## -->
<!--  Definition of Dependency Structure datatypes (7.2.6)  -->
<!-- ########################################################## -->
<!-- Definition of DependencyStructure datatype -->
<complexType name="DependencyStructureType">
    <sequence>
        <element name="Sentence" type="mpeg7:DependencyStructurePhraseType"
maxOccurs="unbounded"/>
    </sequence>
    <attribute ref="xml:lang" use="optional"/>
</complexType>
<!-- Definition of DependencyStructurePhrase datatype -->
<complexType name="DependencyStructurePhraseType">
    <sequence>
        <choice minOccurs="0" maxOccurs="unbounded">
            <element name="Quotation" type="mpeg7:DependencyStructurePhraseType"/>
            <element name="Phrase" type="mpeg7:DependencyStructurePhraseType"/>
        </choice>
        <choice>
            <element name="Head" type="mpeg7:WordFormType"/>
            <element name="CompoundHead" type="mpeg7:NonDependencyStructurePhraseType"/>
        </choice>
        <choice minOccurs="0" maxOccurs="unbounded">
            <element name="Quotation" type="mpeg7:DependencyStructurePhraseType"/>
            <element name="Phrase" type="mpeg7:DependencyStructurePhraseType"/>
        </choice>
    </sequence>
    <attribute name="id" type="ID" use="optional"/>
    <attribute name="equal" type="IDREF" use="optional"/>
    <attribute name="operator" use="optional">
        <simpleType>
            <union memberTypes="mpeg7:dependencyOperatorType mpeg7:termReferenceType"/>
        </simpleType>
    </attribute>
    <attribute name="functionWord" type="string" use="optional"/>
    <attribute name="synthesis" type="NMTOKEN" use="optional" fixed="dependency"/>
</complexType>
<!-- Definition of WordForm datatype -->
<complexType name="WordFormType">
    <simpleContent>
        <extension base="string">
            <attribute name="terms" use="optional">
                <simpleType>
                    <list itemType="mpeg7:termReferenceType"/>
                </simpleType>
            </attribute>
            <attribute name="id" type="ID" use="optional"/>
            <attribute name="equal" type="IDREF" use="optional"/>
            <attribute name="type" use="optional">
                <simpleType>
                    <list>
                        <simpleType>
                            <union>
                                <simpleType>
```

No reproduction or networking permitted without license from IHS

Copyright International Organization for Standardization
Not for Resale
Provided by IHS under license with ISO
© ISO/IEC 2009 – All rights reserved

```
                                <restriction base="NMTOKEN">
                                    <enumeration value="noun"/>
                                    <enumeration value="pronoun"/>
                                    <enumeration value="adjective"/>
                                    <enumeration value="verb"/>
                                    <enumeration value="adverb"/>
                                    <enumeration value="conjunction"/>
                                    <enumeration value="preposition"/>
                                    <enumeration value="postposition"/>
                                    <enumeration value="article"/>
                                    <enumeration value="interjection"/>
                                </restriction>
                            </simpleType>
                            <simpleType>
                                <restriction base="mpeg7:termReferenceType"/>
                            </simpleType>
                        </union>
                    </simpleType>
                </list>
            </simpleType>
        </attribute>
        <attribute name="baseForm" type="string" use="optional"/>
    </extension>
</simpleContent>
</complexType>
<!-- Definition of NonDependencyStructurePhrase datatype -->
<complexType name="NonDependencyStructurePhraseType">
    <choice minOccurs="2" maxOccurs="unbounded">
        <element name="Quotation" type="mpeg7:DependencyStructurePhraseType"/>
        <element name="Phrase" type="mpeg7:DependencyStructurePhraseType"/>
        <element name="Word" type="mpeg7:WordFormType"/>
        <element name="NonDependencyPhrase" type="mpeg7:NonDependencyStructurePhraseType"/>
    </choice>
    <attribute name="id" type="ID" use="optional"/>
    <attribute name="equal" type="IDREF" use="optional"/>
    <attribute name="synthesis" use="optional" default="unspecified">
        <simpleType>
            <restriction base="NMTOKEN">
                <enumeration value="unspecified"/>
                <enumeration value="coordination"/>
            </restriction>
        </simpleType>
    </attribute>
</complexType>
<!-- Definition of dependencyOperator datatype -->
<simpleType name="dependencyOperatorType">
    <union>
        <simpleType>
            <restriction base="NMTOKEN">
                <enumeration value="subject"/>
                <enumeration value="object"/>
                <enumeration value="indirectObject"/>
                <enumeration value="predicate"/>
                <enumeration value="expletive"/>
                <enumeration value="nonRestrictive"/>
            </restriction>
        </simpleType>
    </union>
</simpleType>
<!-- ################################################ -->
```

No reproduction or networking permitted without license from IHS

© ISO/IEC 2009 – All rights reserved
Copyright International Organization for Standardization
Not for Resale
Provided by IHS under license with ISO

```
    <!--  Definition of ClassificationScheme DS (7.3.2)  -->
    <!-- ################################################ -->
    <!-- Definition of ClassificationSchemeBase DS  -->
    <complexType name="ClassificationSchemeBaseType" abstract="true">
        <complexContent>
            <extension base="mpeg7:DSType">
                <sequence>
                    <element name="Import" type="mpeg7:ReferenceType" minOccurs="0"
maxOccurs="unbounded"/>
                </sequence>
                <attribute name="uri" type="anyURI" use="required"/>
                <attribute name="domain" use="optional">
                    <simpleType>
                        <list itemType="mpeg7:xPathAbsoluteSelectorType"/>
                    </simpleType>
                </attribute>
            </extension>
        </complexContent>
    </complexType>
    <!-- Definition of ClassificationScheme DS  -->
    <complexType name="ClassificationSchemeType">
        <complexContent>
            <extension base="mpeg7:ClassificationSchemeBaseType">
                <sequence>
                    <element name="Term" type="mpeg7:TermDefinitionType" maxOccurs="unbounded"/>
                </sequence>
            </extension>
        </complexContent>
    </complexType>
    <!-- ########################################### -->
    <!--  Definition of TermDefinition DS (7.3.3)  -->
    <!-- ########################################### -->
    <!-- Definition of TermDefinitionBase DS  -->
    <complexType name="TermDefinitionBaseType" abstract="true">
        <complexContent>
            <extension base="mpeg7:DSType">
                <sequence>
                    <element name="Name" minOccurs="0" maxOccurs="unbounded">
                        <complexType>
                            <simpleContent>
                                <extension base="mpeg7:TextualType">
                                    <attribute name="preferred" type="boolean" use="optional"/>
                                </extension>
                            </simpleContent>
                        </complexType>
                    </element>
                    <element name="Definition" type="mpeg7:TextualType" minOccurs="0"
maxOccurs="unbounded"/>
                </sequence>
                <attribute name="termID" type="NMTOKEN"/>
            </extension>
        </complexContent>
    </complexType>
    <!-- Definition of TermDefinition DS  -->
    <complexType name="TermDefinitionType">
        <complexContent>
            <extension base="mpeg7:TermDefinitionBaseType">
                <sequence>
                    <element name="Term" minOccurs="0" maxOccurs="unbounded">
                        <complexType>
```


--`,,```,,,,````-`-`,,`,,`,`,,`---
Copyright International Organization for Standardization
Not for Resale
Provided by IHS under license with ISO
© ISO/IEC 2009 – All rights reserved

```
                        <complexContent>
                            <extension base="mpeg7:TermDefinitionType">
                                <attribute name="relation" type="mpeg7:termRelationQualifierType"
use="optional" default="NT"/>
                            </extension>
                        </complexContent>
                    </complexType>
                </element>
            </sequence>
        </extension>
    </complexContent>
</complexType>
<!-- Definition of termRelationQualifier datatype  -->
<simpleType name="termRelationQualifierType">
    <union>
        <simpleType>
            <restriction base="NMTOKEN">
                <enumeration value="NT"/>
                <enumeration value="BT"/>
                <enumeration value="RT"/>
                <enumeration value="US"/>
                <enumeration value="UF"/>
            </restriction>
        </simpleType>
        <simpleType>
            <restriction base="mpeg7:termReferenceType"/>
        </simpleType>
    </union>
</simpleType>
<!-- ########################################### -->
<!--  Definition of TermUse datatype (7.3.4)  -->
<!-- ########################################### -->
<!-- Definition of InlineTermDefinition datatype  -->
<complexType name="InlineTermDefinitionType" abstract="true">
    <sequence>
        <element name="Name" minOccurs="0" maxOccurs="unbounded">
            <complexType>
                <simpleContent>
                    <extension base="mpeg7:TextualType">
                        <attribute name="preferred" type="boolean" use="optional"/>
                    </extension>
                </simpleContent>
            </complexType>
        </element>
        <element name="Definition" type="mpeg7:TextualType" minOccurs="0" maxOccurs="unbounded"/>
        <element name="Term" minOccurs="0" maxOccurs="unbounded">
            <complexType>
                <complexContent>
                    <extension base="mpeg7:InlineTermDefinitionType">
                        <attribute name="relation" type="mpeg7:termRelationQualifierType" use="optional"
default="NT"/>
                        <attribute name="termID" type="NMTOKEN"/>
                    </extension>
                </complexContent>
            </complexType>
        </element>
    </sequence>
</complexType>
<!-- Definition of TermUse datatype  -->
<complexType name="TermUseType">
```

--`,,```,,,,````-`-`,,`,,`,`,,`---

© ISO/IEC 2009 – All rights reserved
Provided by IHS under license with ISO

Copyright International Organization for Standardization
Not for Resale

```
        <complexContent>
            <extension base="mpeg7:InlineTermDefinitionType">
                <attribute name="href" type="mpeg7:termReferenceType" use="optional"/>
            </extension>
        </complexContent>
    </complexType>
    <!-- ################################################ -->
    <!--  Definition of ControlledTermUse datatype (7.3.5)  -->
    <!-- ################################################ -->
    <!-- Definition of ControlledTermUse datatype  -->
    <complexType name="ControlledTermUseType">
        <complexContent>
            <extension base="mpeg7:InlineTermDefinitionType">
                <attribute name="href" type="mpeg7:termReferenceType" use="required"/>
            </extension>
        </complexContent>
    </complexType>
    <!-- ################################################ -->
    <!--  Definition of termReferenceType datatype (7.3.6)  -->
    <!-- ################################################ -->
    <!-- Definition of termReference datatype  -->
    <simpleType name="termReferenceType">
        <union>
            <simpleType>
                <restriction base="NMTOKEN">
                    <whiteSpace value="collapse"/>
                    <pattern value=":[^:]+:[^:]+"/>
                </restriction>
            </simpleType>
            <simpleType>
                <restriction base="anyURI"/>
            </simpleType>
        </union>
    </simpleType>
    <!-- ############################################################ -->
    <!--  Definition of ClassificationSchemeAlias datatype (7.3.7)  -->
    <!-- ############################################################ -->
    <!-- Definition of ClassificationSchemeAlias datatype  -->
    <complexType name="ClassificationSchemeAliasType">
        <complexContent>
            <extension base="mpeg7:HeaderType">
                <attribute name="alias" type="NMTOKEN" use="required"/>
                <attribute name="href" type="anyURI" use="required"/>
            </extension>
        </complexContent>
    </complexType>
    <!-- ################################## -->
    <!--  Definition of Agent DS (7.4.2)  -->
    <!-- ################################## -->
    <!-- Definition of Agent DS  -->
    <complexType name="AgentType" abstract="true">
        <complexContent>
            <extension base="mpeg7:DSType">
                <sequence>
                    <element name="Icon" type="mpeg7:MediaLocatorType" minOccurs="0"
maxOccurs="unbounded"/>
                </sequence>
            </extension>
        </complexContent>
    </complexType>
```

No reproduction or networking permitted without license from IHS

Copyright International Organization for Standardization
Not for Resale
Provided by IHS under license with ISO
© ISO/IEC 2009 – All rights reserved

```
    <!-- ################################### -->
    <!--  Definition of Person DS (7.4.3)  -->
    <!-- ################################### -->
    <!-- Definition of Person DS  -->
    <complexType name="PersonType">
        <complexContent>
            <extension base="mpeg7:AgentType">
                <sequence>
                    <choice maxOccurs="unbounded">
                        <element name="Name" type="mpeg7:PersonNameType"/>
                        <element name="NameTerm" type="mpeg7:ControlledTermUseType"/>
                    </choice>
                    <element name="Affiliation" minOccurs="0" maxOccurs="unbounded">
                        <complexType>
                            <choice>
                                <element name="Organization" type="mpeg7:OrganizationType"/>
                                <element name="OrganizationRef" type="mpeg7:ReferenceType"/>
                                <element name="PersonGroup" type="mpeg7:PersonGroupType"/>
                                <element name="PersonGroupRef" type="mpeg7:ReferenceType"/>
                            </choice>
                        </complexType>
                    </element>
                    <element name="Citizenship" type="mpeg7:countryCode" minOccurs="0"
maxOccurs="unbounded"/>
                    <choice minOccurs="0">
                        <element name="Address" type="mpeg7:PlaceType"/>
                        <element name="AddressRef" type="mpeg7:ReferenceType"/>
                    </choice>
                    <element name="ElectronicAddress" type="mpeg7:ElectronicAddressType" minOccurs="0"
maxOccurs="unbounded"/>
                </sequence>
            </extension>
        </complexContent>
    </complexType>
    <!-- ######################################## -->
    <!--  Definition of PersonGroup DS (7.4.4)  -->
    <!-- ######################################## -->
    <!-- Definition of PersonGroup DS  -->
    <complexType name="PersonGroupType">
        <complexContent>
            <extension base="mpeg7:AgentType">
                <sequence>
                    <element name="Name" minOccurs="0" maxOccurs="unbounded">
                        <complexType>
                            <simpleContent>
                                <extension base="mpeg7:TextualType">
                                    <attribute name="type" use="optional">
                                        <simpleType>
                                            <restriction base="NMTOKEN">
                                                <enumeration value="former"/>
                                                <enumeration value="variant"/>
                                                <enumeration value="main"/>
                                            </restriction>
                                        </simpleType>
                                    </attribute>
                                </extension>
                            </simpleContent>
                        </complexType>
                    </element>
                    <element name="NameTerm" minOccurs="0" maxOccurs="unbounded">
```

--`,,```,,,,````-`-`,,`,,`,`,,`---

© ISO/IEC 2009 – All rights reserved
Provided by IHS under license with ISO

Copyright International Organization for Standardization
Not for Resale

```
                    <complexType>
                        <complexContent>
                            <extension base="mpeg7:ControlledTermUseType">
                                <attribute name="type" use="optional">
                                    <simpleType>
                                        <restriction base="NMTOKEN">
                                            <enumeration value="former"/>
                                            <enumeration value="variant"/>
                                            <enumeration value="main"/>
                                        </restriction>
                                    </simpleType>
                                </attribute>
                            </extension>
                        </complexContent>
                    </complexType>
                </element>
                <element name="Kind" type="mpeg7:TermUseType" minOccurs="0"/>
                <choice minOccurs="0" maxOccurs="unbounded">
                    <element name="Member" type="mpeg7:PersonType"/>
                    <element name="MemberRef" type="mpeg7:ReferenceType"/>
                </choice>
                <choice minOccurs="0">
                    <element name="Jurisdiction" type="mpeg7:PlaceType"/>
                    <element name="JurisdictionRef" type="mpeg7:ReferenceType"/>
                </choice>
                <choice minOccurs="0">
                    <element name="Address" type="mpeg7:PlaceType"/>
                    <element name="AddressRef" type="mpeg7:ReferenceType"/>
                </choice>
                <element name="ElectronicAddress" type="mpeg7:ElectronicAddressType" minOccurs="0"/>
            </sequence>
        </extension>
    </complexContent>
</complexType>
<!-- ######################################### -->
<!--  Definition of Organization DS (7.4.5)  -->
<!-- ######################################### -->
<!-- Definition of Organization DS  -->
<complexType name="OrganizationType">
    <complexContent>
        <extension base="mpeg7:AgentType">
            <sequence>
                <element name="Name" minOccurs="0" maxOccurs="unbounded">
                    <complexType>
                        <simpleContent>
                            <extension base="mpeg7:TextualType">
                                <attribute name="type" use="optional">
                                    <simpleType>
                                        <restriction base="NMTOKEN">
                                            <enumeration value="former"/>
                                            <enumeration value="variant"/>
                                            <enumeration value="main"/>
                                        </restriction>
                                    </simpleType>
                                </attribute>
                            </extension>
                        </simpleContent>
                    </complexType>
                </element>
                <element name="NameTerm" minOccurs="0" maxOccurs="unbounded">
```


Copyright International Organization for Standardization
Not for Resale
Provided by IHS under license with ISO
© ISO/IEC 2009 – All rights reserved

```
                    <complexType>
                        <complexContent>
                            <extension base="mpeg7:ControlledTermUseType">
                                <attribute name="type" use="optional">
                                    <simpleType>
                                        <restriction base="NMTOKEN">
                                            <enumeration value="former"/>
                                            <enumeration value="variant"/>
                                            <enumeration value="main"/>
                                        </restriction>
                                    </simpleType>
                                </attribute>
                            </extension>
                        </complexContent>
                    </complexType>
                </element>
                <element name="Kind" type="mpeg7:TermUseType" minOccurs="0"/>
                <choice minOccurs="0" maxOccurs="unbounded">
                    <element name="Contact" type="mpeg7:AgentType"/>
                    <element name="ContactRef" type="mpeg7:ReferenceType"/>
                </choice>
                <choice minOccurs="0">
                    <element name="Jurisdiction" type="mpeg7:PlaceType"/>
                    <element name="JurisdictionRef" type="mpeg7:ReferenceType"/>
                </choice>
                <choice minOccurs="0">
                    <element name="Address" type="mpeg7:PlaceType"/>
                    <element name="AddressRef" type="mpeg7:ReferenceType"/>
                </choice>
                <element name="ElectronicAddress" type="mpeg7:ElectronicAddressType" minOccurs="0"/>
            </sequence>
        </extension>
    </complexContent>
</complexType>
<!-- ################################################ -->
<!--  Definition of PersonName datatype (7.4.6)  -->
<!-- ################################################ -->
<!-- Definition of PersonaName datatype  -->
<complexType name="PersonNameType">
    <sequence>
        <choice maxOccurs="unbounded">
            <element name="GivenName" type="mpeg7:NameComponentType"/>
            <element name="FamilyName" type="mpeg7:NameComponentType" minOccurs="0"/>
            <element name="Title" type="mpeg7:NameComponentType" minOccurs="0"/>
            <element name="Numeration" type="string" minOccurs="0"/>
        </choice>
    </sequence>
    <attribute name="dateFrom" type="mpeg7:timePointType" use="optional"/>
    <attribute name="dateTo" type="mpeg7:timePointType" use="optional"/>
    <attribute name="type" use="optional">
        <simpleType>
            <restriction base="NMTOKEN">
                <enumeration value="former"/>
                <enumeration value="variant"/>
                <enumeration value="main"/>
            </restriction>
        </simpleType>
    </attribute>
    <attribute ref="xml:lang" use="optional"/>
</complexType>
```

No reproduction or networking permitted without license from IHS

© ISO/IEC 2009 – All rights reserved
Copyright International Organization for Standardization
Not for Resale
Provided by IHS under license with ISO

```
    <!-- Definition of NameComponent datatype -->
    <complexType name="NameComponentType">
        <simpleContent>
            <extension base="mpeg7:TextualBaseType">
                <attribute name="initial" type="string" use="optional"/>
                <attribute name="abbrev" type="string" use="optional"/>
            </extension>
        </simpleContent>
    </complexType>
    <!-- ################################################## -->
    <!--  Definition of ElectronicAddress datatype (7.4.7)  -->
    <!-- ################################################## -->
    <!-- Definition of ElectronicAddress datatype -->
    <complexType name="ElectronicAddressType">
        <sequence>
            <element name="Telephone" type="string" minOccurs="0" maxOccurs="unbounded"/>
            <element name="Fax" type="string" minOccurs="0" maxOccurs="unbounded"/>
            <element name="Email" type="string" minOccurs="0" maxOccurs="unbounded"/>
            <element name="Url" type="anyURI" minOccurs="0" maxOccurs="unbounded"/>
        </sequence>
    </complexType>
    <!-- ################################## -->
    <!--  Definition of Place DS (7.5.2)  -->
    <!-- ################################## -->
    <!-- Definition of Place DS -->
    <complexType name="PlaceType">
        <complexContent>
            <extension base="mpeg7:DSType">
                <sequence>
                    <element name="Name" type="mpeg7:TextualType" minOccurs="0"
maxOccurs="unbounded"/>
                    <element name="NameTerm" type="mpeg7:ControlledTermUseType" minOccurs="0"
maxOccurs="unbounded"/>
                    <element name="Role" type="mpeg7:TermUseType" minOccurs="0"/>
                    <element name="GeographicPosition" minOccurs="0">
                        <complexType>
                            <sequence>
                                <element name="Point" type="mpeg7:GeographicPointType"/>
                            </sequence>
                            <attribute name="datum" type="string" use="optional"/>
                        </complexType>
                    </element>
                    <element name="AstronomicalBody" type="mpeg7:TermUseType" minOccurs="0"
maxOccurs="unbounded"/>
                    <element name="Region" type="mpeg7:regionCode" minOccurs="0"
maxOccurs="unbounded"/>
                    <element name="AdministrativeUnit" minOccurs="0" maxOccurs="unbounded">
                        <complexType>
                            <simpleContent>
                                <extension base="string">
                                    <attribute name="type" type="string" use="optional"/>
                                </extension>
                            </simpleContent>
                        </complexType>
                    </element>
                    <element name="PostalAddress" minOccurs="0">
                        <complexType>
                            <sequence>
                                <element name="AddressLine" type="mpeg7:TextualType"
maxOccurs="unbounded"/>
```


Copyright International Organization for Standardization
Not for Resale
Provided by IHS under license with ISO
© ISO/IEC 2009 – All rights reserved

```
                        <element name="PostingIdentifier" type="mpeg7:TextualType" minOccurs="0"/>
                    </sequence>
                    <attribute ref="xml:lang" use="optional"/>
                </complexType>
            </element>
            <element name="InternalCoordinates" type="string" minOccurs="0"/>
        </sequence>
        <attribute ref="xml:lang" use="optional"/>
    </extension>
  </complexContent>
</complexType>
<!-- ################################################ -->
<!--  Definition of GeographicPoint datatype (7.5.3)  -->
<!-- ################################################ -->
<!-- Definition of GeographicPoint datatype -->
<complexType name="GeographicPointType">
  <attribute name="longitude" use="required">
    <simpleType>
      <restriction base="double">
        <minInclusive value="-180.0"/>
        <maxInclusive value="180.0"/>
      </restriction>
    </simpleType>
  </attribute>
  <attribute name="latitude" use="required">
    <simpleType>
      <restriction base="double">
        <minInclusive value="-90.0"/>
        <maxInclusive value="90.0"/>
      </restriction>
    </simpleType>
  </attribute>
  <attribute name="altitude" type="double" use="optional"/>
</complexType>
<!-- ################################## -->
<!--  Definition the Graph DS (7.6.2)  -->
<!-- ################################## -->
<!-- Definition of Graph DS -->
<complexType name="GraphType">
  <complexContent>
    <extension base="mpeg7:DSType">
      <choice minOccurs="0" maxOccurs="unbounded">
        <element name="Node">
          <complexType>
            <complexContent>
              <extension base="mpeg7:ReferenceType">
                <sequence>
                  <element name="Name" type="mpeg7:TermUseType" minOccurs="0"/>
                </sequence>
                <attribute name="id" type="ID" use="optional"/>
                <attribute name="name" type="string" use="optional"/>
              </extension>
            </complexContent>
          </complexType>
        </element>
        <element name="Relation" type="mpeg7:RelationType"/>
      </choice>
    </extension>
  </complexContent>
</complexType>
```

No reproduction or networking permitted without license from IHS

© ISO/IEC 2009 – All rights reserved
Copyright International Organization for Standardization
Not for Resale
Provided by IHS under license with ISO

```
<!-- ######################################## -->
<!--  Definition the Relation DS (7.6.3)  -->
<!-- ######################################## -->
<!-- Definition of Relation DS -->
<complexType name="RelationType">
    <complexContent>
        <extension base="mpeg7:DSType">
            <attribute name="type" type="mpeg7:termReferenceType" use="optional"/>
            <attribute name="source" use="optional">
                <simpleType>
                    <list itemType="anyURI"/>
                </simpleType>
            </attribute>
            <attribute name="target">
                <simpleType>
                    <list itemType="anyURI"/>
                </simpleType>
            </attribute>
            <attribute name="directed" type="boolean" use="optional" default="true"/>
            <attribute name="strength" type="mpeg7:zeroToOneType" use="optional" default="1.0"/>
        </extension>
    </complexContent>
</complexType>
<!-- ######################################### -->
<!--  Definition the MorphismGraph DS (7.6.4)  -->
<!-- ######################################### -->
<!-- Definition of MorphismGraph DS -->
<complexType name="MorphismGraphType">
    <complexContent>
        <extension base="mpeg7:GraphType">
            <sequence>
                <choice>
                    <element name="SourceGraphRef" type="mpeg7:ReferenceType"/>
                    <element name="SourceGraphTermRef" type="mpeg7:ControlledTermUseType"/>
                </choice>
                <choice>
                    <element name="TargetGraphRef" type="mpeg7:ReferenceType"/>
                    <element name="TargetGraphTermRef" type="mpeg7:ControlledTermUseType"/>
                </choice>
                <element name="RuleTermRef" type="mpeg7:ControlledTermUseType" minOccurs="0"/>
            </sequence>
        </extension>
    </complexContent>
</complexType>
<!-- ###################################### -->
<!--  Definition of OrderingKey DS (7.7.2)  -->
<!-- ###################################### -->
<!-- Definition of OrderingKey DS -->
<complexType name="OrderingKeyType">
    <complexContent>
        <extension base="mpeg7:HeaderType">
            <sequence>
                <element name="Selector">
                    <complexType>
                        <attribute name="xpath" type="mpeg7:xPathSelectorType"/>
                    </complexType>
                </element>
                <element name="Field" maxOccurs="unbounded">
                    <complexType>
                        <attribute name="xpath" type="mpeg7:xPathFieldType"/>
```


Copyright International Organization for Standardization
Not for Resale
Provided by IHS under license with ISO
© ISO/IEC 2009 – All rights reserved

```
                    </complexType>
                </element>
            </sequence>
            <attribute name="name" type="string" use="optional"/>
            <attribute name="semantics" type="string" use="optional"/>
            <attribute name="direction" use="optional" default="descending">
                <simpleType>
                    <restriction base="NMTOKEN">
                        <enumeration value="descending"/>
                        <enumeration value="ascending"/>
                    </restriction>
                </simpleType>
            </attribute>
        </extension>
    </complexContent>
</complexType>
<!-- ######################################## -->
<!--  Definition of Affective DS (7.8.2)  -->
<!-- ######################################## -->
<!-- Definition of Affective DS -->
<complexType name="AffectiveType">
    <complexContent>
        <extension base="mpeg7:DSType">
            <sequence>
                <element name="Type" type="mpeg7:TermUseType"/>
                <element name="Score" minOccurs="2" maxOccurs="unbounded">
                    <complexType>
                        <simpleContent>
                            <extension base="mpeg7:minusOneToOneType">
                                <attributeGroup ref="mpeg7:referenceGrp"/>
                            </extension>
                        </simpleContent>
                    </complexType>
                </element>
            </sequence>
        </extension>
    </complexContent>
</complexType>
<!-- ############################################## -->
<!--  Definition of MediaInformation DS (8.2.1)  -->
<!-- ############################################## -->
<!-- Definition of MediaInformation DS -->
<complexType name="MediaInformationType">
    <complexContent>
        <extension base="mpeg7:DSType">
            <sequence>
                <element name="MediaProfile" type="mpeg7:MediaProfileType" maxOccurs="unbounded"/>
                <!-- MediaIdentification excluded -->
                <!-- <element name="MediaIdentification" type="mpeg7:MediaIdentificationType"
minOccurs="0"/> -->
            </sequence>
        </extension>
    </complexContent>
</complexType>
<!-- ######################################### -->
<!--  Definition of MediaProfile DS (8.2.3)  -->
<!-- ######################################### -->
<!-- Definition of MediaProfile DS -->
<complexType name="MediaProfileType">
    <complexContent>
```

--`,,```,,,,````-`-`,,`,,`,`,,`---
© ISO/IEC 2009 – All rights reserved
Provided by IHS under license with ISO
Copyright International Organization for Standardization
Not for Resale

```
            <extension base="mpeg7:DSType">
                <sequence>
                    <element name="ComponentMediaProfile" type="mpeg7:MediaProfileType" minOccurs="0"
maxOccurs="unbounded"/>
                    <element name="MediaFormat" type="mpeg7:MediaFormatType" minOccurs="0"/>
                    <element name="MediaTranscodingHints" type="mpeg7:MediaTranscodingHintsType"
minOccurs="0"/>
                    <element name="MediaQuality" type="mpeg7:MediaQualityType" minOccurs="0"/>
                    <element name="MediaInstance" type="mpeg7:MediaInstanceType" minOccurs="0"
maxOccurs="unbounded"/>
                </sequence>
                <attribute name="master" type="boolean" use="optional" default="false"/>
            </extension>
        </complexContent>
    </complexType>
    <!-- ######################################## -->
    <!--  Definition of MediaFormat D (8.2.4)  -->
    <!-- ######################################## -->
    <!-- Definition of MediaFormat D -->
    <complexType name="MediaFormatType">
        <complexContent>
            <extension base="mpeg7:DType">
                <sequence>
                    <element name="Content" type="mpeg7:ControlledTermUseType"/>
                    <element name="Medium" type="mpeg7:ControlledTermUseType" minOccurs="0"/>
                    <element name="FileFormat" type="mpeg7:ControlledTermUseType" minOccurs="0"/>
                    <element name="FileSize" type="nonNegativeInteger" minOccurs="0"/>
                    <element name="System" type="mpeg7:ControlledTermUseType" minOccurs="0"/>
                    <element name="Bandwidth" type="float" minOccurs="0"/>
                    <element name="BitRate" minOccurs="0">
                        <complexType>
                            <simpleContent>
                                <extension base="nonNegativeInteger">
                                    <attribute name="variable" type="boolean" use="optional" default="false"/>
                                    <attribute name="minimum" type="nonNegativeInteger" use="optional"/>
                                    <attribute name="average" type="nonNegativeInteger" use="optional"/>
                                    <attribute name="maximum" type="nonNegativeInteger" use="optional"/>
                                </extension>
                            </simpleContent>
                        </complexType>
                    </element>
                    <element name="TargetChannelBitRate" type="nonNegativeInteger" minOccurs="0"/>
                    <element name="ScalableCoding" minOccurs="0">
                        <simpleType>
                            <union>
                                <simpleType>
                                    <restriction base="NMTOKEN">
                                        <enumeration value="spatial"/>
                                        <enumeration value="temporal"/>
                                        <enumeration value="snr"/>
                                        <enumeration value="fgs"/>
                                    </restriction>
                                </simpleType>
                                <simpleType>
                                    <restriction base="mpeg7:termReferenceType"/>
                                </simpleType>
                            </union>
                        </simpleType>
                    </element>
                    <element name="VisualCoding" minOccurs="0">
```


Copyright International Organization for Standardization
Not for Resale
Provided by IHS under license with ISO
© ISO/IEC 2009 – All rights reserved

```
                    <complexType>
                        <sequence>
                            <element name="Format" minOccurs="0">
                                <complexType>
                                    <complexContent>
                                        <extension base="mpeg7:ControlledTermUseType">
                                            <attribute name="colorDomain" use="optional" default="color">
                                                <simpleType>
                                                    <union>
                                                        <simpleType>
                                                            <restriction base="NMTOKEN">
                                                                <enumeration value="binary"/>
                                                                <enumeration value="color"/>
                                                                <enumeration value="graylevel"/>
                                                                <enumeration value="colorized"/>
                                                            </restriction>
                                                        </simpleType>
                                                        <simpleType>
                                                            <restriction base="mpeg7:termReferenceType"/>
                                                        </simpleType>
                                                    </union>
                                                </simpleType>
                                            </attribute>
                                        </extension>
                                    </complexContent>
                                </complexType>
                            </element>
                            <element name="Pixel" minOccurs="0">
                                <complexType>
                                    <attribute name="resolution" type="nonNegativeInteger" use="optional"/>
                                    <attribute name="aspectRatio" type="mpeg7:nonNegativeReal"
use="optional"/>
                                    <attribute name="bitsPer" type="nonNegativeInteger" use="optional"/>
                                </complexType>
                            </element>
                            <element name="Frame" minOccurs="0">
                                <complexType>
                                    <attribute name="height" type="nonNegativeInteger" use="optional"/>
                                    <attribute name="width" type="nonNegativeInteger" use="optional"/>
                                    <attribute name="aspectRatio" type="mpeg7:nonNegativeReal"
use="optional"/>
                                    <attribute name="rate" type="mpeg7:nonNegativeReal" use="optional"/>
                                    <attribute name="structure" use="optional">
                                        <simpleType>
                                            <restriction base="NMTOKEN">
                                                <enumeration value="progressive"/>
                                                <enumeration value="interlaced"/>
                                            </restriction>
                                        </simpleType>
                                    </attribute>
                                </complexType>
                            </element>
                            <element name="ColorSampling" type="mpeg7:ColorSamplingType"
minOccurs="0"/>
                        </sequence>
                    </complexType>
                </element>
                <element name="AudioCoding" minOccurs="0">
                    <complexType>
                        <sequence>
```

© ISO/IEC 2009 – All rights reserved
Copyright International Organization for Standardization
Not for Resale
Provided by IHS under license with ISO

```
                        <element name="Format" type="mpeg7:ControlledTermUseType" minOccurs="0"/>
                        <element name="AudioChannels" minOccurs="0">
                            <complexType>
                                <simpleContent>
                                    <extension base="nonNegativeInteger">
                                        <attribute name="front" type="nonNegativeInteger" use="optional"/>
                                        <attribute name="side" type="nonNegativeInteger" use="optional"/>
                                        <attribute name="rear" type="nonNegativeInteger" use="optional"/>
                                        <attribute name="lfe" type="nonNegativeInteger" use="optional"/>
                                        <attribute name="track" type="nonNegativeInteger" use="optional"/>
                                    </extension>
                                </simpleContent>
                            </complexType>
                        </element>
                        <element name="Sample" minOccurs="0">
                            <complexType>
                                <attribute name="rate" type="mpeg7:nonNegativeReal" use="optional"/>
                                <attribute name="bitsPer" type="nonNegativeInteger" use="optional"/>
                            </complexType>
                        </element>
                        <element name="Emphasis" minOccurs="0">
                            <simpleType>
                                <union>
                                    <simpleType>
                                        <restriction base="NMTOKEN">
                                            <enumeration value="none"/>
                                            <enumeration value="50over15Microseconds"/>
                                            <enumeration value="ccittJ17"/>
                                        </restriction>
                                    </simpleType>
                                    <simpleType>
                                        <restriction base="mpeg7:termReferenceType"/>
                                    </simpleType>
                                </union>
                            </simpleType>
                        </element>
                        <element name="Presentation" type="mpeg7:ControlledTermUseType"
minOccurs="0"/>
                    </sequence>
                </complexType>
            </element>
            <element name="SceneCodingFormat" type="mpeg7:ControlledTermUseType"
minOccurs="0"/>
            <element name="GraphicsCodingFormat" type="mpeg7:ControlledTermUseType"
minOccurs="0"/>
            <element name="OtherCodingFormat" type="mpeg7:ControlledTermUseType"
minOccurs="0"/>
        </sequence>
    </extension>
</complexContent>
</complexType>
<!-- Definition of ColorSampling D -->
<complexType name="ColorSamplingType">
    <complexContent>
        <extension base="mpeg7:DType">
            <sequence>
                <element name="Lattice" minOccurs="0">
                    <complexType>
                        <attribute name="width" type="positiveInteger" use="required"/>
                        <attribute name="height" type="positiveInteger" use="required"/>
```


Copyright International Organization for Standardization
Not for Resale
Provided by IHS under license with ISO
© ISO/IEC 2009 – All rights reserved

```
                    </complexType>
                </element>
                <element name="Field" maxOccurs="unbounded">
                    <complexType>
                        <sequence>
                            <element name="Component" maxOccurs="unbounded">
                                <complexType>
                                    <complexContent>
                                        <extension base="mpeg7:TermUseType">
                                            <sequence>
                                                <element name="Offset" minOccurs="0">
                                                    <complexType>
                                                        <attribute name="horizontal"
type="mpeg7:nonNegativeReal" use="required"/>
                                                        <attribute name="vertical" type="mpeg7:nonNegativeReal"
use="required"/>
                                                    </complexType>
                                                </element>
                                                <element name="Period" minOccurs="0">
                                                    <complexType>
                                                        <attribute name="horizontal"
type="mpeg7:nonNegativeReal" use="required"/>
                                                        <attribute name="vertical" type="mpeg7:nonNegativeReal"
use="required"/>
                                                    </complexType>
                                                </element>
                                            </sequence>
                                        </extension>
                                    </complexContent>
                                </complexType>
                            </element>
                        </sequence>
                        <attribute name="temporalOrder" type="nonNegativeInteger" use="optional"/>
                        <attribute name="positionalOrder" type="nonNegativeInteger" use="optional"/>
                    </complexType>
                </element>
            </sequence>
        </extension>
    </complexContent>
</complexType>
<!-- ################################################ -->
<!--  Definition of Media TranscodingHints D (8.2.5)  -->
<!-- ################################################ -->
<!-- Definition of MediaTranscodingHints D -->
<complexType name="MediaTranscodingHintsType">
    <complexContent>
        <extension base="mpeg7:DType">
            <sequence>
                <element name="MotionHint" minOccurs="0">
                    <complexType>
                        <sequence>
                            <element name="MotionRange" minOccurs="0">
                                <complexType>
                                    <attribute name="xLeft" type="nonNegativeInteger" use="required"/>
                                    <attribute name="xRight" type="nonNegativeInteger" use="required"/>
                                    <attribute name="yDown" type="nonNegativeInteger" use="required"/>
                                    <attribute name="yUp" type="nonNegativeInteger" use="required"/>
                                </complexType>
                            </element>
                        </sequence>
```

--`,,```,,,,````-`-`,,`,,`,`,,`---

© ISO/IEC 2009 – All rights reserved

Provided by IHS under license with ISO

Copyright International Organization for Standardization
Not for Resale

```
                        <attribute name="uncompensability" type="mpeg7:zeroToOneType" use="optional"/>
                        <attribute name="intensity" type="mpeg7:zeroToOneType" use="optional"/>
                    </complexType>
                </element>
                <element name="ShapeHint" minOccurs="0">
                    <complexType>
                        <attribute name="shapeChange" type="float" use="optional"/>
                        <attribute name="numOfNonTranspBlocks" type="mpeg7:nonNegativeReal"
use="optional"/>
                    </complexType>
                </element>
                <element name="CodingHints" minOccurs="0">
                    <complexType>
                        <attribute name="avgQuantScale" type="mpeg7:nonNegativeReal" use="optional"/>
                        <attribute name="intraFrameDistance" type="nonNegativeInteger" use="optional"/>
                        <attribute name="anchorFrameDistance" type="positiveInteger" use="optional"/>
                    </complexType>
                </element>
            </sequence>
            <attribute name="difficulty" type="mpeg7:zeroToOneType" use="optional"/>
            <attribute name="importance" type="mpeg7:zeroToOneType" use="optional"/>
            <attribute name="spatialResolutionHint" type="mpeg7:zeroToOneType" use="optional"/>
        </extension>
    </complexContent>
</complexType>
<!-- ######################################## -->
<!--  Definition of MediaQuality D (8.2.6)  -->
<!-- ######################################## -->
<!-- Definition of MediaQuality D -->
<complexType name="MediaQualityType">
    <complexContent>
        <extension base="mpeg7:DType">
            <sequence>
                <element name="QualityRating" maxOccurs="unbounded">
                    <complexType>
                        <complexContent>
                            <extension base="mpeg7:RatingType">
                                <attribute name="type" use="required">
                                    <simpleType>
                                        <restriction base="NMTOKEN">
                                            <enumeration value="subjective"/>
                                            <enumeration value="objective"/>
                                        </restriction>
                                    </simpleType>
                                </attribute>
                            </extension>
                        </complexContent>
                    </complexType>
                </element>
                <element name="RatingSource" type="mpeg7:AgentType" minOccurs="0"/>
                <element name="RatingInformationLocator" type="mpeg7:ReferenceType" minOccurs="0"
maxOccurs="unbounded"/>
                <element name="PerceptibleDefects" minOccurs="0">
                    <complexType>
                        <sequence>
                            <element name="VisualDefects" type="mpeg7:ControlledTermUseType"
minOccurs="0" maxOccurs="unbounded"/>
                            <element name="AudioDefects" type="mpeg7:ControlledTermUseType"
minOccurs="0" maxOccurs="unbounded"/>
                        </sequence>
```


Copyright International Organization for Standardization
Not for Resale
Provided by IHS under license with ISO
© ISO/IEC 2009 – All rights reserved

```
                    </complexType>
                </element>
            </sequence>
        </extension>
    </complexContent>
</complexType>
<!-- Definition of Rating datatype -->
<complexType name="RatingType">
    <sequence>
        <element name="RatingValue" type="float"/>
        <element name="RatingScheme">
            <complexType>
                <complexContent>
                    <extension base="mpeg7:TermUseType">
                        <attribute name="best" type="float" use="optional"/>
                        <attribute name="worst" type="float" use="optional"/>
                        <attribute name="style" use="required">
                            <simpleType>
                                <restriction base="NMTOKEN">
                                    <enumeration value="higherBetter"/>
                                    <enumeration value="lowerBetter"/>
                                </restriction>
                            </simpleType>
                        </attribute>
                    </extension>
                </complexContent>
            </complexType>
        </element>
    </sequence>
</complexType>
<!-- ########################################### -->
<!--  Definition of MediaInstance DS (8.2.7)  -->
<!-- ########################################### -->
<!-- Definition of MediaInstance DS -->
<complexType name="MediaInstanceType">
    <complexContent>
        <extension base="mpeg7:DSType">
            <sequence>
                <element name="InstanceIdentifier" type="mpeg7:UniqueIDType"/>
                <choice>
                    <element name="MediaLocator" type="mpeg7:MediaLocatorType"/>
                    <element name="LocationDescription" type="mpeg7:TextualType"/>
                </choice>
            </sequence>
        </extension>
    </complexContent>
</complexType>
<!-- ################################################ -->
<!--  Definition of CreationInformation DS (9.2.1)  -->
<!-- ################################################ -->
<!-- Definition of CreationInformation DS  -->
<complexType name="CreationInformationType">
    <complexContent>
        <extension base="mpeg7:DSType">
            <sequence>
                <element name="Creation" type="mpeg7:CreationType"/>
                <element name="Classification" type="mpeg7:ClassificationType" minOccurs="0"/>
                <element name="RelatedMaterial" type="mpeg7:RelatedMaterialType" minOccurs="0"
maxOccurs="unbounded"/>
            </sequence>
```

No reproduction or networking permitted without license from IHS

© ISO/IEC 2009 – All rights reserved
Copyright International Organization for Standardization
Not for Resale
Provided by IHS under license with ISO

```
            </extension>
        </complexContent>
    </complexType>
    <!-- ##################################### -->
    <!--  Definition of Creation DS (9.2.2)  -->
    <!-- ##################################### -->
    <!-- Definition of Creation DS  -->
    <complexType name="CreationType">
        <complexContent>
            <extension base="mpeg7:DSType">
                <sequence>
                    <element name="Title" type="mpeg7:TitleType" maxOccurs="unbounded"/>
                    <element name="TitleMedia" type="mpeg7:TitleMediaType" minOccurs="0"/>
                    <element name="Abstract" type="mpeg7:TextAnnotationType" minOccurs="0"
maxOccurs="unbounded"/>
                    <element name="Creator" type="mpeg7:CreatorType" minOccurs="0"
maxOccurs="unbounded"/>
                    <element name="CreationCoordinates" minOccurs="0" maxOccurs="unbounded">
                        <complexType>
                            <sequence>
                                <element name="Location" type="mpeg7:PlaceType" minOccurs="0"/>
                                <element name="Date" type="mpeg7:TimeType" minOccurs="0"/>
                            </sequence>
                        </complexType>
                    </element>
                    <element name="CreationTool" type="mpeg7:CreationToolType" minOccurs="0"
maxOccurs="unbounded"/>
                    <element name="CopyrightString" type="mpeg7:TextualType" minOccurs="0"
maxOccurs="unbounded"/>
                </sequence>
            </extension>
        </complexContent>
    </complexType>
    <!-- Definition of Title datatype  -->
    <complexType name="TitleType">
        <simpleContent>
            <extension base="mpeg7:TextualBaseType">
                <attribute name="type" use="optional" default="main">
                    <simpleType>
                        <union>
                            <simpleType>
                                <restriction base="NMTOKEN">
                                    <enumeration value="main"/>
                                    <enumeration value="secondary"/>
                                    <enumeration value="alternative"/>
                                    <enumeration value="original"/>
                                    <enumeration value="popular"/>
                                    <enumeration value="opusNumber"/>
                                    <enumeration value="songTitle"/>
                                    <enumeration value="albumTitle"/>
                                    <enumeration value="seriesTitle"/>
                                    <enumeration value="episodeTitle"/>
                                </restriction>
                            </simpleType>
                            <simpleType>
                                <restriction base="mpeg7:termReferenceType"/>
                            </simpleType>
                        </union>
                    </simpleType>
                </attribute>
```


Copyright International Organization for Standardization
Not for Resale
Provided by IHS under license with ISO
© ISO/IEC 2009 – All rights reserved

```
            </extension>
        </simpleContent>
    </complexType>
    <!-- Definition of TitleMedia datatype -->
    <complexType name="TitleMediaType">
        <sequence>
            <element name="TitleImage" type="mpeg7:ImageLocatorType" minOccurs="0"/>
            <element name="TitleVideo" type="mpeg7:TemporalSegmentLocatorType" minOccurs="0"/>
            <element name="TitleAudio" type="mpeg7:TemporalSegmentLocatorType" minOccurs="0"/>
        </sequence>
    </complexType>
    <!-- Definition of Creator datatype -->
    <complexType name="CreatorType">
        <complexContent>
            <extension base="mpeg7:MediaAgentType">
                <sequence>
                    <element name="Character" type="mpeg7:PersonNameType" minOccurs="0"
maxOccurs="unbounded"/>
                    <element name="Instrument" type="mpeg7:CreationToolType" minOccurs="0"
maxOccurs="unbounded"/>
                </sequence>
            </extension>
        </complexContent>
    </complexType>
    <!-- Definition of MediaAgent datatype  -->
    <complexType name="MediaAgentType">
        <sequence>
            <element name="Role" type="mpeg7:ControlledTermUseType"/>
            <choice>
                <element name="Agent" type="mpeg7:AgentType"/>
                <element name="AgentRef" type="mpeg7:ReferenceType"/>
            </choice>
        </sequence>
    </complexType>
    <!-- Definition of CreationTool datatype -->
    <complexType name="CreationToolType">
        <sequence>
            <element name="Tool" type="mpeg7:TermUseType"/>
            <element name="Setting" minOccurs="0" maxOccurs="unbounded">
                <complexType>
                    <attribute name="name" type="string" use="required"/>
                    <attribute name="value" type="string" use="required"/>
                </complexType>
            </element>
        </sequence>
    </complexType>
    <!-- ########################################### -->
    <!--  Definition of Classification DS (9.2.3)  -->
    <!-- ########################################### -->
    <!-- Definition of Classification DS  -->
    <complexType name="ClassificationType">
        <complexContent>
            <extension base="mpeg7:DSType">
                <sequence>
                    <element name="Form" type="mpeg7:ControlledTermUseType" minOccurs="0"/>
                    <element name="Genre" minOccurs="0" maxOccurs="unbounded">
                        <complexType>
                            <complexContent>
                                <extension base="mpeg7:ControlledTermUseType">
                                    <attribute name="type" use="optional" default="main">
```

© ISO/IEC 2009 – All rights reserved
Copyright International Organization for Standardization
Not for Resale
Provided by IHS under license with ISO

```
                                <simpleType>
                                    <restriction base="NMTOKEN">
                                        <enumeration value="main"/>
                                        <enumeration value="secondary"/>
                                    </restriction>
                                </simpleType>
                            </attribute>
                        </extension>
                    </complexContent>
                </complexType>
            </element>
            <element name="Subject" type="mpeg7:TextAnnotationType" minOccurs="0"/>
            <element name="Purpose" type="mpeg7:ControlledTermUseType" minOccurs="0"
maxOccurs="unbounded"/>
            <element name="Language" type="mpeg7:ExtendedLanguageType" minOccurs="0"
maxOccurs="unbounded"/>
            <element name="CaptionLanguage" minOccurs="0" maxOccurs="unbounded">
                <complexType>
                    <simpleContent>
                        <extension base="language">
                            <attribute name="closed" type="boolean" use="optional" default="true"/>
                            <attribute name="supplemental" type="boolean" use="optional"
default="false"/>
                        </extension>
                    </simpleContent>
                </complexType>
            </element>
            <element name="SignLanguage" minOccurs="0" maxOccurs="unbounded">
                <complexType>
                    <simpleContent>
                        <extension base="language">
                            <attribute name="primary" type="boolean" use="optional"/>
                            <attribute name="translation" type="boolean" use="optional"/>
                        </extension>
                    </simpleContent>
                </complexType>
            </element>
            <element name="Release" minOccurs="0">
                <complexType>
                    <sequence>
                        <element name="Region" type="mpeg7:regionCode" minOccurs="0"
maxOccurs="unbounded"/>
                    </sequence>
                    <attribute name="date" type="mpeg7:timePointType" use="optional"/>
                </complexType>
            </element>
            <element name="Target" minOccurs="0">
                <complexType>
                    <sequence>
                        <element name="Market" type="mpeg7:ControlledTermUseType" minOccurs="0"
maxOccurs="unbounded"/>
                        <element name="Age" minOccurs="0">
                            <complexType>
                                <attribute name="min" type="nonNegativeInteger" use="optional"/>
                                <attribute name="max" type="nonNegativeInteger" use="optional"/>
                            </complexType>
                        </element>
                        <element name="Region" type="mpeg7:regionCode" minOccurs="0"
maxOccurs="unbounded"/>
                    </sequence>
```

No reproduction or networking permitted without license from IHS

Copyright International Organization for Standardization
Not for Resale
Provided by IHS under license with ISO
© ISO/IEC 2009 – All rights reserved

```
                    </complexType>
                </element>
                <element name="ParentalGuidance" type="mpeg7:ParentalGuidanceType" minOccurs="0"
maxOccurs="unbounded"/>
                <element name="MediaReview" type="mpeg7:MediaReviewType" minOccurs="0"
maxOccurs="unbounded"/>
            </sequence>
        </extension>
    </complexContent>
</complexType>
<!-- Definition of ExtendedLanguage datatype -->
<complexType name="ExtendedLanguageType">
    <simpleContent>
        <extension base="language">
            <attribute name="type" use="optional" default="original">
                <simpleType>
                    <restriction base="NMTOKEN">
                        <enumeration value="original"/>
                        <enumeration value="dubbed"/>
                        <enumeration value="background"/>
                    </restriction>
                </simpleType>
            </attribute>
            <attribute name="supplemental" type="boolean" use="optional" default="false"/>
        </extension>
    </simpleContent>
</complexType>
<!-- Definition of ParentalGuidance datatype -->
<complexType name="ParentalGuidanceType">
    <sequence>
        <choice>
            <element name="ParentalRating" type="mpeg7:ControlledTermUseType"/>
            <element name="MinimumAge" type="nonNegativeInteger"/>
        </choice>
        <element name="Region" type="mpeg7:regionCode" minOccurs="0" maxOccurs="unbounded"/>
    </sequence>
</complexType>
<!-- Definition of MediaReview datatype -->
<complexType name="MediaReviewType">
    <sequence>
        <element name="Rating" type="mpeg7:RatingType" minOccurs="0"/>
        <element name="FreeTextReview" type="mpeg7:TextualType" minOccurs="0"
maxOccurs="unbounded"/>
        <element name="ReviewReference" type="mpeg7:RelatedMaterialType" minOccurs="0"/>
        <element name="Reviewer" type="mpeg7:AgentType" minOccurs="0"/>
    </sequence>
</complexType>
<!-- ############################################ -->
<!--  Definition of RelatedMaterial DS (9.2.4)  -->
<!-- ############################################ -->
<!-- Definition of RelatedMaterial DS -->
<complexType name="RelatedMaterialType">
    <complexContent>
        <extension base="mpeg7:DSType">
            <sequence>
                <element name="DisseminationFormat" type="mpeg7:ControlledTermUseType"
minOccurs="0"/>
                <element name="MaterialType" type="mpeg7:TermUseType" minOccurs="0"/>
                <choice>
                    <element name="MediaLocator" type="mpeg7:MediaLocatorType"/>
```

--`,,```,,,,````-`-`,,`,,`,`,,`---

© ISO/IEC 2009 – All rights reserved
Copyright International Organization for Standardization
Not for Resale
Provided by IHS under license with ISO

```
                    <element name="MediaInformation" type="mpeg7:MediaInformationType"/>
                    <element name="MediaInformationRef" type="mpeg7:ReferenceType"/>
                </choice>
                <choice minOccurs="0">
                    <element name="CreationInformation" type="mpeg7:CreationInformationType"/>
                    <element name="CreationInformationRef" type="mpeg7:ReferenceType"/>
                </choice>
                <choice minOccurs="0">
                    <element name="UsageInformation" type="mpeg7:UsageInformationType"/>
                    <element name="UsageInformationRef" type="mpeg7:ReferenceType"/>
                </choice>
            </sequence>
        </extension>
    </complexContent>
</complexType>
<!-- ################################################ -->
<!--  Definition of UsageInformation DS (10.2.1)  -->
<!-- ################################################ -->
<!-- Definition of UsageInformation DS -->
<complexType name="UsageInformationType">
    <complexContent>
        <extension base="mpeg7:DSType">
            <sequence>
                <element name="Rights" type="mpeg7:RightsType" minOccurs="0"/>
                <element name="FinancialResults" type="mpeg7:FinancialType" minOccurs="0"/>
                <element name="Availability" type="mpeg7:AvailabilityType" minOccurs="0"
maxOccurs="unbounded"/>
                <element name="UsageRecord" type="mpeg7:UsageRecordType" minOccurs="0"
maxOccurs="unbounded"/>
            </sequence>
        </extension>
    </complexContent>
</complexType>
<!-- ############################################ -->
<!--  Definition of Rights datatype (10.2.2)  -->
<!-- ############################################ -->
<!-- Definition of Rights datatype -->
<complexType name="RightsType">
    <sequence>
        <element name="RightsID" type="mpeg7:UniqueIDType" maxOccurs="unbounded"/>
    </sequence>
</complexType>
<!-- ################################################ -->
<!--  Definition of Financial datatype (10.2.3)  -->
<!-- ################################################ -->
<!-- Definition of Financial datatype -->
<complexType name="FinancialType">
    <sequence>
        <element name="AccountItem" maxOccurs="unbounded">
            <complexType>
                <sequence>
                    <element name="EffectiveDate" type="mpeg7:timePointType" minOccurs="0"/>
                    <choice>
                        <element name="CostType" type="mpeg7:TermUseType"/>
                        <element name="IncomeType" type="mpeg7:TermUseType"/>
                    </choice>
                </sequence>
                <attribute name="currency" type="mpeg7:currencyCode" use="required"/>
                <attribute name="value" type="decimal" use="required"/>
            </complexType>
```

--`,,```,,,,````-`-`,,`,,`,`,,`---

Copyright International Organization for Standardization
Not for Resale

Provided by IHS under license with ISO © ISO/IEC 2009 – All rights reserved

```
            </element>
        </sequence>
    </complexType>
    <!-- ########################################## -->
    <!--  Definition of Availability DS (10.2.4)  -->
    <!-- ########################################## -->
    <!-- Definition of Availability DS -->
    <complexType name="AvailabilityType">
        <complexContent>
            <extension base="mpeg7:DSType">
                <sequence>
                    <element name="InstanceRef" type="mpeg7:ReferenceType"/>
                    <element name="Dissemination" type="mpeg7:DisseminationType" minOccurs="0"/>
                    <element name="Financial" type="mpeg7:FinancialType" minOccurs="0"/>
                    <element name="Rights" type="mpeg7:RightsType" minOccurs="0"/>
                    <element name="AvailabilityPeriod" minOccurs="0" maxOccurs="unbounded">
                        <complexType>
                            <complexContent>
                                <extension base="mpeg7:TimeType">
                                    <attribute name="type" use="optional">
                                        <simpleType>
                                            <list>
                                                <simpleType>
                                                    <union>
                                                        <simpleType>
                                                            <restriction base="NMTOKEN">
                                                                <enumeration value="live"/>
                                                                <enumeration value="repeat"/>
                                                                <enumeration value="firstShowing"/>
                                                                <enumeration value="lastShowing"/>
                                                                <enumeration value="conditionalAccess"/>
                                                                <enumeration value="encrypted"/>
                                                                <enumeration value="payPerUse"/>
                                                            </restriction>
                                                        </simpleType>
                                                        <simpleType>
                                                            <restriction base="mpeg7:termReferenceType"/>
                                                        </simpleType>
                                                    </union>
                                                </simpleType>
                                            </list>
                                        </simpleType>
                                    </attribute>
                                </extension>
                            </complexContent>
                        </complexType>
                    </element>
                </sequence>
            </extension>
        </complexContent>
    </complexType>
    <!-- Definition of Dissemination DS -->
    <complexType name="DisseminationType">
        <complexContent>
            <extension base="mpeg7:DSType">
                <sequence>
                    <element name="Source" type="mpeg7:TextualType" minOccurs="0"/>
                    <element name="Format" type="mpeg7:ControlledTermUseType" minOccurs="0"/>
                    <element name="Disseminator" type="mpeg7:MediaAgentType" minOccurs="0"/>
                    <element name="Location" type="mpeg7:PlaceType" minOccurs="0"/>
```

© ISO/IEC 2009 – All rights reserved
--`,,```,,,,````-`-`,,`,,`,`,,`---
Provided by IHS under license with ISO

Copyright International Organization for Standardization
Not for Resale

```
            </sequence>
        </extension>
    </complexContent>
</complexType>
<!-- ################################################ -->
<!--  Definition of UsageRecord DS (10.2.5)          -->
<!-- ################################################ -->
<!-- Definition of UsageRecord DS -->
<complexType name="UsageRecordType">
    <complexContent>
        <extension base="mpeg7:DSType">
            <sequence>
                <element name="AvailabilityRef" type="mpeg7:ReferenceType"/>
                <element name="Audience" type="nonNegativeInteger" minOccurs="0"/>
                <element name="Financial" type="mpeg7:FinancialType" minOccurs="0"/>
            </sequence>
        </extension>
    </complexContent>
</complexType>
<!-- ######################################## -->
<!--  Definition of Segment DS (11.2.2)  -->
<!-- ######################################## -->
<!-- Definition of Segment DS -->
<complexType name="SegmentType" abstract="true">
    <complexContent>
        <extension base="mpeg7:DSType">
            <sequence>
                <choice minOccurs="0">
                    <element name="MediaInformation" type="mpeg7:MediaInformationType"/>
                    <element name="MediaInformationRef" type="mpeg7:ReferenceType"/>
                    <element name="MediaLocator" type="mpeg7:MediaLocatorType"/>
                </choice>
                <element name="StructuralUnit" type="mpeg7:ControlledTermUseType" minOccurs="0"/>
                <choice minOccurs="0">
                    <element name="CreationInformation" type="mpeg7:CreationInformationType"/>
                    <element name="CreationInformationRef" type="mpeg7:ReferenceType"/>
                </choice>
                <choice minOccurs="0">
                    <element name="UsageInformation" type="mpeg7:UsageInformationType"/>
                    <element name="UsageInformationRef" type="mpeg7:ReferenceType"/>
                </choice>
                <element name="TextAnnotation" minOccurs="0" maxOccurs="unbounded">
                    <complexType>
                        <complexContent>
                            <extension base="mpeg7:TextAnnotationType">
                                <attribute name="type" use="optional">
                                    <simpleType>
                                        <union memberTypes="mpeg7:termReferenceType string"/>
                                    </simpleType>
                                </attribute>
                            </extension>
                        </complexContent>
                    </complexType>
                </element>
                <element name="Relation" type="mpeg7:RelationType" minOccurs="0"
maxOccurs="unbounded"/>
            </sequence>
        </extension>
    </complexContent>
</complexType>
```


Copyright International Organization for Standardization
Not for Resale
Provided by IHS under license with ISO
© ISO/IEC 2009 – All rights reserved

```
<!-- ########################################## -->
<!--  Definition of StillRegion DS (11.4.2)  -->
<!-- ########################################## -->
<!-- Definition of StillRegion DS -->
<complexType name="StillRegionType">
    <complexContent>
        <extension base="mpeg7:SegmentType">
            <sequence>
                <choice minOccurs="0">
                    <element name="MediaTimePoint" type="mpeg7:mediaTimePointType"/>
                    <element name="MediaRelTimePoint" type="mpeg7:MediaRelTimePointType"/>
                    <element name="MediaRelIncrTimePoint" type="mpeg7:MediaRelIncrTimePointType"/>
                </choice>
            </sequence>
        </extension>
    </complexContent>
</complexType>
<!-- ########################################## -->
<!--  Definition of ImageText DS (11.4.4)  -->
<!-- ########################################## -->
<!-- Definition of ImageText DS -->
<complexType name="ImageTextType">
    <complexContent>
        <extension base="mpeg7:StillRegionType">
            <sequence>
                <element name="Text" type="mpeg7:TextualType" minOccurs="0"/>
            </sequence>
            <attribute name="textType" use="optional">
                <simpleType>
                    <union>
                        <simpleType>
                            <restriction base="NMTOKEN">
                                <enumeration value="superimposed"/>
                                <enumeration value="scene"/>
                            </restriction>
                        </simpleType>
                        <simpleType>
                            <restriction base="mpeg7:termReferenceType"/>
                        </simpleType>
                    </union>
                </simpleType>
            </attribute>
            <attribute name="fontSize" type="positiveInteger" use="optional"/>
            <attribute name="fontType" type="string" use="optional"/>
        </extension>
    </complexContent>
</complexType>
<!-- ########################################## -->
<!--  Definition of VideoSegment DS (11.4.8)  -->
<!-- ########################################## -->
<!-- Definition of VideoSegment DS -->
<complexType name="VideoSegmentType">
    <complexContent>
        <extension base="mpeg7:SegmentType">
            <sequence>
                <choice minOccurs="0">
                    <element name="MediaTime" type="mpeg7:MediaTimeType"/>
                </choice>
            </sequence>
        </extension>
```

--`,,```,,,,````-`-`,,`,,`,`,,`---

© ISO/IEC 2009 – All rights reserved
Provided by IHS under license with ISO

Copyright International Organization for Standardization
Not for Resale

```
        </complexContent>
    </complexType>
    <!-- ########################################## -->
    <!--  Definition of AudioSegment DS (11.5.2)  -->
    <!-- ########################################## -->
    <!-- Definition of AudioSegment DS -->
    <complexType name="AudioSegmentType">
        <complexContent>
            <extension base="mpeg7:SegmentType">
                <sequence>
                    <choice minOccurs="0">
                        <element name="MediaTime" type="mpeg7:MediaTimeType"/>
                    </choice>
                    <choice minOccurs="0" maxOccurs="unbounded">
                        <element name="AudioDescriptor" type="mpeg7:AudioDType"/>
                        <element name="AudioDescriptionScheme" type="mpeg7:AudioDSType"/>
                    </choice>
                </sequence>
            </extension>
        </complexContent>
    </complexType>
    <!-- ################################################ -->
    <!--  Definition of AudioVisualSegment DS (11.6.2)   -->
    <!-- ################################################ -->
    <!-- Definition of AudioVisualSegment DS -->
    <complexType name="AudioVisualSegmentType">
        <complexContent>
            <extension base="mpeg7:SegmentType">
                <sequence>
                    <choice minOccurs="0">
                        <element name="MediaTime" type="mpeg7:MediaTimeType"/>
                    </choice>
                </sequence>
            </extension>
        </complexContent>
    </complexType>
    <!-- ############################################### -->
    <!--  Definition of AudioVisualRegion DS (11.6.4)  -->
    <!-- ############################################### -->
    <!-- Definition of AudioVisualRegion DS -->
    <complexType name="AudioVisualRegionType">
        <complexContent>
            <extension base="mpeg7:SegmentType">
                <sequence>
                    <choice minOccurs="0">
                        <element name="AudioMediaTime" type="mpeg7:MediaTimeType"/>
                    </choice>
                </sequence>
            </extension>
        </complexContent>
    </complexType>
    <!-- ################################################ -->
    <!--  Definition of MultimediaSegment DS (11.7.2)   -->
    <!-- ################################################ -->
    <!-- Definition of MultimediaSegment DS -->
    <complexType name="MultimediaSegmentType">
        <complexContent>
            <extension base="mpeg7:SegmentType"/>
        </complexContent>
    </complexType>
```

No reproduction or networking permitted without license from IHS

Copyright International Organization for Standardization
Not for Resale
Provided by IHS under license with ISO
© ISO/IEC 2009 – All rights reserved

```
<!-- ########################################## -->
<!--  Basic User Preference tools (15.2.2)  -->
<!-- ########################################## -->
<!-- Definition of PreferenceCondition D -->
<complexType name="PreferenceConditionType">
    <complexContent>
        <extension base="mpeg7:DType">
            <sequence>
                <element name="Place" type="mpeg7:PlaceType" minOccurs="0"/>
                <element name="Time" minOccurs="0" maxOccurs="unbounded">
                    <complexType>
                        <complexContent>
                            <extension base="mpeg7:TimeType">
                                <attribute name="recurrence" use="optional" default="none">
                                    <simpleType>
                                        <union>
                                            <simpleType>
                                                <restriction base="NMTOKEN">
                                                    <enumeration value="none"/>
                                                    <enumeration value="daily"/>
                                                    <enumeration value="weekly"/>
                                                    <enumeration value="monthly"/>
                                                    <enumeration value="annually"/>
                                                </restriction>
                                            </simpleType>
                                            <simpleType>
                                                <restriction base="mpeg7:termReferenceType"/>
                                            </simpleType>
                                        </union>
                                    </simpleType>
                                </attribute>
                                <attribute name="numOfRecurrences" type="positiveInteger" use="optional"/>
                            </extension>
                        </complexContent>
                    </complexType>
                </element>
            </sequence>
        </extension>
    </complexContent>
</complexType>
<!-- Definition of userChoice datatype -->
<simpleType name="userChoiceType">
    <restriction base="NMTOKEN">
        <enumeration value="true"/>
        <enumeration value="false"/>
        <enumeration value="user"/>
    </restriction>
</simpleType>
<!-- Definition of preferenceValue datatype -->
<simpleType name="preferenceValueType">
    <restriction base="integer">
        <minInclusive value="-100"/>
        <maxInclusive value="100"/>
    </restriction>
</simpleType>
<!-- ################################################ -->
<!--  Definition of UserIdentifier Datatype (15.2.4)  -->
<!-- ################################################ -->
<!-- Definition of UserIdentifier datatype -->
<complexType name="UserIdentifierType">
```

No reproduction or networking permitted without license from IHS

© ISO/IEC 2009 – All rights reserved
Copyright International Organization for Standardization
Not for Resale
Provided by IHS under license with ISO

```
        <sequence>
            <element name="Name" type="mpeg7:TextualType"/>
        </sequence>
        <attribute name="protected" type="mpeg7:userChoiceType" use="optional" default="true"/>
    </complexType>
    <!-- ########################################### -->
    <!--  Definition of UsageHistory DS (15.3.2)  -->
    <!-- ########################################### -->
    <!-- Definition of UsageHistory DS -->
    <complexType name="UsageHistoryType">
        <complexContent>
            <extension base="mpeg7:DSType">
                <sequence>
                    <element name="UserIdentifier" type="mpeg7:UserIdentifierType" minOccurs="0"/>
                    <element name="UserActionHistory" type="mpeg7:UserActionHistoryType"
maxOccurs="unbounded"/>
                </sequence>
                <attribute name="allowCollection" type="mpeg7:userChoiceType" use="optional"
default="false"/>
            </extension>
        </complexContent>
    </complexType>
    <!-- ################################################ -->
    <!--  Definition of UserActionHistory DS (15.3.3)  -->
    <!-- ################################################ -->
    <!-- Definition of UserActionHistory DS -->
    <complexType name="UserActionHistoryType">
        <complexContent>
            <extension base="mpeg7:DSType">
                <sequence>
                    <element name="ObservationPeriod" type="mpeg7:TimeType" minOccurs="0"
maxOccurs="unbounded"/>
                    <element name="UserActionList" type="mpeg7:UserActionListType"
maxOccurs="unbounded"/>
                </sequence>
                <attribute name="protected" type="mpeg7:userChoiceType" use="optional" default="true"/>
            </extension>
        </complexContent>
    </complexType>
    <!-- ########################################### -->
    <!--  Definition of UserActionList DS (15.3.4) -->
    <!-- ########################################### -->
    <!-- Definition of UserActionList DS -->
    <complexType name="UserActionListType">
        <complexContent>
            <extension base="mpeg7:DSType">
                <sequence minOccurs="0">
                    <element name="ActionType" type="mpeg7:TermUseType"/>
                    <element name="UserAction" type="mpeg7:UserActionType" minOccurs="0"
maxOccurs="unbounded"/>
                </sequence>
                <attribute name="numOfInstances" type="nonNegativeInteger" use="optional"/>
                <attribute name="totalDuration" type="mpeg7:durationType" use="optional"/>
            </extension>
        </complexContent>
    </complexType>
    <!-- ######################################### -->
    <!--  Definition of UserAction DS (15.3.5)  -->
    <!-- ######################################### -->
    <!-- Definition of UserAction DS -->
```


Copyright International Organization for Standardization
Not for Resale
Provided by IHS under license with ISO
© ISO/IEC 2009 – All rights reserved

```
    <complexType name="UserActionType">
        <complexContent>
            <extension base="mpeg7:DSType">
                <sequence>
                    <element name="ActionTime" minOccurs="0">
                        <complexType>
                            <sequence>
                                <element name="MediaTime" type="mpeg7:MediaTimeType" minOccurs="0"/>
                                <element name="GeneralTime" type="mpeg7:TimeType" minOccurs="0"/>
                            </sequence>
                        </complexType>
                    </element>
                    <element name="ProgramIdentifier" type="mpeg7:UniqueIDType"/>
                    <element name="ActionDataItem" type="mpeg7:ReferenceType" minOccurs="0"
maxOccurs="unbounded"/>
                </sequence>
            </extension>
        </complexContent>
    </complexType>
</schema
```

A.4 MPEG-21 IPMP Components Base Profile for PA-AF Schema Definition

MPEG-21 IPMP Components Base Profile for PA-AF is a profile derived from MPEG-21 IPMP Components Base Profile, which consists of IPMPDIDL, IPMP General Information, and IPMP Information. The MPEG-21 IPMP Components Base Profile for PA-AF applies restrictions to IPMPDIDL, while IPMPGeneral Information and IPMP Information of the MPEG-21 IPMP Components Base Profile are not changed. Table A.5 lists xml schema definition of IPMPDIDL of the MPEG-21 IPMP Components Base Profile for PA-AF. Table A.6 lists xml schema definition of IPMP General Information of the MPEG-21 IPMP Components Base Profile for PA-AF. Table A.7 lists xml schema definition of IPMP Information of the MPEG-21 IPMP Components Base Profile for PA-AF.

Table A.5 — IPMPDIDL schema definition for PA-AF

```
<?xml version="1.0"?>
<!--=======================================-->
<!--=====Schema for IPMP DIDL Types=====-->
<!--=======================================-->
<schema targetNamespace="urn:mpeg:mpeg21:2004:01-IPMPDIDL-NS"
xmlns:ipmpdidl="urn:mpeg:mpeg21:2004:01-IPMPDIDL-NS"
xmlns:didmodel="urn:mpeg:mpeg21:2002:02-DIDMODEL-NS"
xmlns="http://www.w3.org/2001/XMLSchema"
elementFormDefault="qualified" attributeFormDefault="unqualified" version="0.01">
    <import namespace="urn:mpeg:mpeg21:2002:02-DIDMODEL-NS"
schemaLocation="didmodel.xsd"/>
    <import namespace="urn:mpeg:mpeg21:2002:02-DIDL-NS" schemaLocation="didl.xsd"/>
    <!--============================================================
        All element types corresponding to the DID model contain:
        (i) a maximum of one ipmpdidl:Identifier element, into which an appropriate identifier for
the protected Representation may be placed
        (ii)one ipmpdidl:Info element, into which information about the governance is placed
        (iii)  one ipmpdidl:Contents element, into which the governed contents is placed
    ============================================================-->
    <element name="Container" type="ipmpdidl:ContainerType"
substitutionGroup="didmodel:Container"/>
    <complexType name="ContainerType">
        <complexContent>
            <extension base="didmodel:ContainerType">
```

--`,,```,,,,````-`-`,,`,,`,`,,`---

© ISO/IEC 2009 – All rights reserved
Copyright International Organization for Standardization
Not for Resale
Provided by IHS under license with ISO

```
            <sequence>
                <group ref="ipmpdidl:IPMPDIDLChildGroup"/>
            </sequence>
        </extension>
    </complexContent>
</complexType>
<element name="Item" type="ipmpdidl:ItemType" substitutionGroup="didmodel:Item"/>
<complexType name="ItemType">
    <complexContent>
        <extension base="didmodel:ItemType">
            <sequence>
                <group ref="ipmpdidl:IPMPDIDLChildGroup"/>
            </sequence>
        </extension>
    </complexContent>
</complexType>
<element name="Descriptor" type="ipmpdidl:DescriptorType"
substitutionGroup="didmodel:Descriptor"/>
<complexType name="DescriptorType">
    <complexContent>
        <extension base="didmodel:DescriptorType">
            <sequence>
                <group ref="ipmpdidl:IPMPDIDLChildGroup"/>
            </sequence>
        </extension>
    </complexContent>
</complexType>
<element name="Statement" type="ipmpdidl:StatementType"
substitutionGroup="didmodel:Statement"/>
<complexType name="StatementType" mixed="true">
    <complexContent mixed="true">
        <extension base="didmodel:StatementType">
            <sequence>
                <group ref="ipmpdidl:IPMPDIDLChildGroup"/>
            </sequence>
        </extension>
    </complexContent>
</complexType>
<element name="Component" type="ipmpdidl:ComponentType"
substitutionGroup="didmodel:Component"/>
<complexType name="ComponentType">
    <complexContent>
        <extension base="didmodel:ComponentType">
            <sequence>
                <group ref="ipmpdidl:IPMPDIDLChildGroup"/>
            </sequence>
        </extension>
    </complexContent>
</complexType>
<element name="Anchor" type="ipmpdidl:AnchorType"
substitutionGroup="didmodel:Anchor"/>
<complexType name="AnchorType">
    <complexContent>
        <extension base="didmodel:AnchorType">
            <sequence>
                <group ref="ipmpdidl:IPMPDIDLChildGroup"/>
            </sequence>
        </extension>
    </complexContent>
</complexType>
```


Copyright International Organization for Standardization
Not for Resale
Provided by IHS under license with ISO
© ISO/IEC 2009 – All rights reserved

```
    <element name="Fragment" type="ipmpdidl:FragmentType"
substitutionGroup="didmodel:Fragment"/>
    <complexType name="FragmentType" mixed="true">
        <complexContent mixed="true">
            <extension base="didmodel:FragmentType">
                <sequence>
                    <group ref="ipmpdidl:IPMPDIDLChildGroup"/>
                </sequence>
            </extension>
        </complexContent>
    </complexType>
    <element name="Resource" type="ipmpdidl:ResourceType"
substitutionGroup="didmodel:Resource"/>
    <complexType name="ResourceType" mixed="true">
        <complexContent mixed="true">
            <extension base="didmodel:ResourceType">
                <sequence>
                    <group ref="ipmpdidl:IPMPDIDLChildGroup"/>
                </sequence>
            </extension>
        </complexContent>
    </complexType>
    <!-- elements from here onward are unique to the IPMP DIDL Representation-->
    <group name="IPMPDIDLChildGroup">
        <sequence>
            <element ref="ipmpdidl:Identifier" minOccurs="0"/>
            <element ref="ipmpdidl:Info"/>
            <element ref="ipmpdidl:ContentInfo" minOccurs="0"/>
            <element ref="ipmpdidl:Contents"/>
        </sequence>
    </group>
    <element name="Contents">
        <complexType mixed="true">
            <sequence>
                <any namespace="##any" processContents="lax" minOccurs="0"/>
            </sequence>
            <attribute name="ref" type="anyURI"/>
        </complexType>
    </element>
    <element name="Info">
        <complexType mixed="true">
            <sequence>
                <any namespace="##any" processContents="lax" minOccurs="0"/>
            </sequence>
        </complexType>
    </element>
    <element name="Identifier">
        <complexType mixed="true">
            <sequence>
                <any namespace="##any" processContents="lax" minOccurs="0"/>
            </sequence>
        </complexType>
    </element>
    <element name="ContentInfo">
        <complexType mixed="true">
            <sequence>
                <any namespace="##any" processContents="lax" minOccurs="0"/>
            </sequence>
        </complexType>
    </element>
```

© ISO/IEC 2009 – All rights reserved
Copyright International Organization for Standardization
Not for Resale
Provided by IHS under license with ISO

```
    <element name="ProtectedAsset" type="ipmpdidl:ProtectedAssetType"/>
    <complexType name="ProtectedAssetType">
        <sequence>
            <group ref="ipmpdidl:IPMPDIDLChildGroup"/>
        </sequence>
        <attribute name="mimeType" type="string" use="required"/>
    </complexType>
</schema>
```

Table A.6 — IPMP General Information schema definition for PA-AF

```
<?xml version="1.0"?>
<schema targetNamespace="urn:mpeg:mpeg21:2004:01-IPMPINFO-BASE-NS"
xmlns:dsig="http://www.w3.org/2000/09/xmldsig#" xmlns:r="urn:mpeg:mpeg21:2003:01-REL-R-
NS" xmlns:dii="urn:mpeg:mpeg21:2002:01-DII-NS"
xmlns:ipmpinfo="urn:mpeg:mpeg21:2004:01-IPMPINFO-BASE-NS"
xmlns="http://www.w3.org/2001/XMLSchema" elementFormDefault="qualified"
attributeFormDefault="unqualified" version="0.01">
    <import namespace="http://www.w3.org/2000/09/xmldsig#" schemaLocation="xmldsig-core-
schema.xsd"/>
    <import namespace="urn:mpeg:mpeg21:2003:01-REL-R-NS" schemaLocation="rel-r.xsd"/>
    <import namespace="urn:mpeg:mpeg21:2002:01-DII-NS" schemaLocation="dii.xsd"/>
    <include schemaLocation="IPMPInfo-AMD1.xsd"/>
    <element name="IPMPGeneralInfoDescriptor"
type="ipmpinfo:IPMPGeneralInfoDescriptorType"/>
    <complexType name="IPMPGeneralInfoDescriptorType">
        <sequence>
            <element ref="ipmpinfo:ToolList" minOccurs="0"/>
            <element ref="ipmpinfo:LicenseCollection" minOccurs="0"/>
            <element ref="dsig:Signature" minOccurs="0"/>
            <!--Signature for the IPMPGeneralInfoDescriptor element and children -->
        </sequence>
    </complexType>
    <element name="ToolList" type="ipmpinfo:ToolListType"/>
    <complexType name="ToolListType">
        <sequence>
            <element ref="ipmpinfo:ToolDescription" maxOccurs="unbounded"/>
        </sequence>
    </complexType>
    <element name="ToolDescription" type="ipmpinfo:ToolDescriptionType"/>
    <complexType name="ToolDescriptionType">
        <sequence>
            <element ref="ipmpinfo:IPMPToolID"/>
            <element ref="ipmpinfo:Remote" minOccurs="0"/>
        </sequence>
        <attribute name="localID" type="ID" use="required"/>
    </complexType>
    <element name="LicenseCollection" type="ipmpinfo:LicenseCollectionType"/>
    <complexType name="LicenseCollectionType" mixed="true">
        <sequence>
            <element ref="ipmpinfo:RightsDescriptor" maxOccurs="unbounded"/>
        </sequence>
    </complexType>
</schema>
```

--`,,```,,,,````-`-`,,`,,`,`,,`---

Copyright International Organization for Standardization
Not for Resale

Provided by IHS under license with ISO © ISO/IEC 2009 – All rights reserved

Table A.7 — IPMP Information schema definition for PA-AF

```
<?xml version="1.0"?>
<!-- edited with XMLSPY v5 U (http://www.xmlspy.com) by 2user (information and
communications university) -->
<schema targetNamespace="urn:mpeg:mpeg21:2004:01-IPMPINFO-BASE-NS"
xmlns:dsig="http://www.w3.org/2000/09/xmldsig#" xmlns:r="urn:mpeg:mpeg21:2003:01-REL-R-
NS" xmlns:dii="urn:mpeg:mpeg21:2002:01-DII-NS"
xmlns:ipmpinfo="urn:mpeg:mpeg21:2004:01-IPMPINFO-BASE-NS"
xmlns="http://www.w3.org/2001/XMLSchema" elementFormDefault="qualified"
attributeFormDefault="unqualified" version="0.01">
    <import namespace="http://www.w3.org/2000/09/xmldsig#" schemaLocation="xmldsig-core-
schema.xsd"/>
    <import namespace="urn:mpeg:mpeg21:2003:01-REL-R-NS" schemaLocation="rel-r.xsd"/>
    <import namespace="urn:mpeg:mpeg21:2002:01-DII-NS" schemaLocation="dii.xsd"/>
    <element name="IPMPInfoDescriptor" type="ipmpinfo:IPMPInfoDescriptorType"/>
    <complexType name="IPMPInfoDescriptorType">
        <sequence>
            <element ref="ipmpinfo:Tool" minOccurs="0" maxOccurs="unbounded"/>
            <element ref="dsig:Signature" minOccurs="0"/>
        </sequence>
    </complexType>
    <element name="Tool" type="ipmpinfo:ToolType"/>
    <complexType name="ToolType">
        <sequence>
            <element ref="ipmpinfo:ToolRef"/>
            <element ref="ipmpinfo:InitializationSettings" minOccurs="0"/>
        </sequence>
        <attribute name="order" type="positiveInteger"/>
    </complexType>
    <element name="ToolRef" type="ipmpinfo:ToolRef"/>
    <complexType name="ToolRef">
        <attribute name="localidref" type="IDREF" use="required"/>
    </complexType>
    <element name="IPMPToolID" type="anyURI"/>
    <element name="Remote" type="ipmpinfo:RemoteType"/>
    <complexType name="RemoteType">
        <attribute name="ref" type="anyURI"/>
    </complexType>
    <element name="RightsDescriptor" type="ipmpinfo:RightsDescriptorType"/>
    <complexType name="RightsDescriptorType">
        <choice minOccurs="0">
            <element ref="ipmpinfo:License"/>
            <element ref="ipmpinfo:LicenseReference"/>
        </choice>
    </complexType>
    <element name="License" type="ipmpinfo:LicenseType"/>
    <complexType name="LicenseType" mixed="true">
        <sequence>
            <any namespace="##any" processContents="lax" minOccurs="0"/>
        </sequence>
    </complexType>
    <element name="LicenseReference" type="ipmpinfo:LicenseReferenceType"/>
    <complexType name="LicenseReferenceType">
        <simpleContent>
            <extension base="anyURI"/>
        </simpleContent>
    </complexType>
    <element name="InitializationSettings" type="ipmpinfo:InitializationSettingsType"/>
    <complexType name="InitializationSettingsType" mixed="true">
```

--`,,```,,,,````-`-`,,`,,`,`,,`---

© ISO/IEC 2009 – All rights reserved
Copyright International Organization for Standardization
Not for Resale
Provided by IHS under license with ISO

```
        <sequence>
            <element ref="ipmpinfo:InitializationData"/>
        </sequence>
    </complexType>
    <element name="InitializationData" type="ipmpinfo:InitializationDataType"/>
    <complexType name="InitializationDataType" mixed="true">
        <sequence>
            <any namespace="##any" processContents="lax" minOccurs="0"/>
        </sequence>
    </complexType>
</schema>
```


Copyright International Organization for Standardization
Not for Resale
Provided by IHS under license with ISO
© ISO/IEC 2009 – All rights reserved

Annex B
(normative)

Extracting Files from a PA-AF File

B.1 Content Information's Address Resolution

Address resolution of Content Information starts from a DIDL instance in an XML box. The procedure to resolve address of Content Information is as follows:

1. Aquire and parse the string value of the "ref' attribute of the Resource element.
2. If Content Information is located in an external PA-AF file (the value of 'ref' contains character '#' as described in 9.3), obtain the PA-AF file.
3. Search an associated Item_name in IINF whose value is the same as the string parsed in step 1 and resolve its Item_ID.
4. Search offset information in ILOC whose Item_ID is the same as Item_ID resolved in step 3.

When a relative path name string from the context-root of the package is used to reference a file, a PA-AF unpackaging tool shall first try to find an item entry whose item_name is set as the same relative path string. If search is fails, it means that the file is not stored in the PA-AF file.

B.2 File Extraction

The file extraction procedure is as follows:

1. Fetch an Item element that models the desired file to be extracted.
2. For each child Component element, resolve Content Information's address as described in B.1.
3. Extract all Content Information.
4. If there are more than one Content Information, append them according to the order of Component elements to obtain one file.
5. Extract the File Attribute Model value associated with the extracted file. The File Attribute Model can be found from the Descriptor child element Item obtained in step 1.
6. Try to use the original pathname set in a "pamaf:EncodedPath" element, which has an attribute "original=true".
7. If it is not possible to use the original pathname, try to use another entry of "pamaf:EncodedPath" elements.
8. If there is no suitable entry of the "pamaf:EncodedPath" for the target platform, then generate a pathname by using the default pathname set in the "pamaf:EncodedPath" element, which has an attribute "default=true".
9. Try to use the original file attribute set in "pamaf:OriginalAttributes".
10. If it is not possible to use the original attributes, then try to use another entry of "pamaf:DefaultAttributs" elements.
11. If there is no suitable entry of "pamaf:OriginalAttributes" and "pamaf:DefaultAttributes" for the target platform, then generate attributes based on attributes set in "pamaf:OriginalAttributes" and "pamaf:DefaultAttributes".
12. If applicable, extract and restore user defined file attributes that are carried under the "pamaf:UserDefineFileAttributes" element.

No reproduction or networking permitted without license from IHS

© ISO/IEC 2009 – All rights reserved
Provided by IHS under license with ISO

Copyright International Organization for Standardization
Not for Resale

Annex C
(informative)

Recommendation for Mime Type and Pre-Processing Tool Identification

C.1 Overview

This Annex describes possible values of mimeTypes and mimeSubTypes for the pre-processing tool. An implementation of a PA-AF packaging tool may apply pre-processing tools listed in Table C.1 for the related file extension names.

C.2 MimeTypes

Table C.1 shows a list of the possible values of mimeTypes and mimeSubTypes and corresponding file formats and file extension names.

The values of mimeType and mimeSubType are defined in IANA Matrix for Protocol Parameter Assignment/Registration Procedures: Media Types: http://www.iana.org/assignments/media-types/index.html Other mimeTypes and file extensions not listed in the Table C.1 should be treated as the "application/octet-stream". Table C.2 lists mimeTypes and mimeSubTypes and their associate file extensions included in the category "Others". Note that the content of Table B.1 can be extended if there is a need to address future mimeTypes.

Table C.1 — List of the mimeTypes for the content_type field and the content_encoding field

mimeTypes / mimeSubType	Corresponding file formats	File extension names
audio/x-wav	Wave file format	.wav, .wave
audio/x-aiff	Aiff file format	.aif, .aiff, .aifa
audio/x-bwf	Broadcast wave file format	.bwf, .bwf64
audio/x-wave64	Sony Wave64 file format	.wav64, .w64
application/x-paaf	ISO/IEC 23000-6	.paf
application/octet-stream	Unknown mimeTypes / mimeSubTypes should be treated as the 'application/octed-stream'	See Table C.2.

NOTE Values of mimeSubType began with 'x-' string may be changed with future revision of IANA Matrix.

Table C.2 — List of the mimeTypes and file extensions included in the category of "Others"

mimeTypes / mimeSubType	Corresponding file formats	File extension names
audio/mp4	MPEG-4 file format (This may include MP3, AAC, MPEG-4 ALS, …)	.mp4, .m4a
audio/x-mp4als	MPEG-4 ALS encoded file (Contained in MP4 file format).	.als, .mp4
text/plain		.txt
application/zip	Already compressed by zip	.zip
application/binary	Binary data	any

Copyright International Organization for Standardization
Not for Resale
Provided by IHS under license with ISO
© ISO/IEC 2009 – All rights reserved

C.3 Content Encoding

Table C.3 shows a list of possible values of the contentEncoding attribute of the Resource element and corresponding coders. Values defined as mimeTypes and mimeSubTypes can be used as the tool identifier for the contentEncoding field.

Table C.4 shows a list of possible values of data encryption tools defined by http://www.w3.org/TR/2002/REC-xmlenc-core-20021210/#sec-AlgID.
Note that tools listed in both Table C.3 and C4 are not exhaustic and inclusion of more tools in the future is possible.

If multiple content-encodings have been applied to the item of iinf-box or the resource, each content encoding shall be listed in the value of the content encoding attribute in a space-delimited list in the order in which they were applied.

Table C.3 — List of possible values of the contentEncoding and corresponding tools

Identification	Corresponding coders	MimeTypes the coder can be applied to
(NULL string)	Not encoded (binary)	Any type
identity	Not encoded (binary)	Any type
audio/x-mp4als	MPEG-4 ALS (ALS bit-stream contained in MP4)	audio/x-wav, audio/x-aiff, audio/x-bwf
application/zip	Zip	Any type
application/md5	MD5 hash	Any type

Table C.4 — List of possible values of data encryption and corresponding tools

Identification	Corresponding coders	MimeTypes the coder can be applied to
http://www.w3.org/2001/04/xmlenc#tripledes-cbc	Triple DES encryption / decription	Any type
http://www.w3.org/2001/04/xmlenc#aes128-cbc	Triple AES encryption / decription with key length 128	Any type
http://www.w3.org/2001/04/xmlenc#aes192-cbc	Triple AES encryption / decription with key length 192	Any type
http://www.w3.org/2001/04/xmlenc#aes256-cbc	Triple AES encryption / decription with key length 256	Any type

--`,,```,,,,````-`-`,,`,,`,`,,`---

© ISO/IEC 2009 – All rights reserved
Copyright International Organization for Standardization
Not for Resale

Provided by IHS under license with ISO

Annex D
(informative)

XML Instance Examples for Preservation Description Information

D.1 Example of Archive Structure Information

Table D.1 shows an example of the MPEG-21 DIDL 2nd Edition profile for a PA-AF instance to describe the directory and file structure.

Table D.1 — Example of file structure model

```
<?xml version="1.0" encoding="UTF-8"?>
<DIDL xmlns="urn:mpeg:mpeg21:2002:02-DIDL-NS"
xmlns:xsi="http://www.w3.org/2001/XMLSchema-instance"
xsi:schemaLocation="urn:mpeg:mpeg21:2002:02-DIDL-NS   DIDL.xsd
">
    <Container> <!--Root Container-->
        <Container> <!--Directory in level 1-->
            <Container> <!--First directory in level 2-->
                <Item/> <!--First file in level 3-->
            </Container>
            <Item/> <!--First file in level 2-->
            <Item/> <!--Second file in level 2-->
        </Container>
        <Item/> <!--First file in level 1-->
        <Item/> <!--Second file in level 1-->
    </Container>
</DIDL>
```

Table D.2 shows an example of using the file attribute model in an instance of the MPEG-21 DIDL 2nd Edition profile for PA-AF.

Table D.2 — Example of instance using file attribute model metadata

```
<?xml version="1.0" encoding="UTF-8"?>
<DIDL xmlns="urn:mpeg:mpeg21:2002:02-DIDL-NS"
xmlns:pamaf="urn:mpeg:mpeg21:2007:01-PAMAF-NS"
xmlns:xsi="http://www.w3.org/2001/XMLSchema-instance"
xsi:schemaLocation="urn:mpeg:mpeg21:2002:02-DIDL-NS DIDL.xsd
urn:mpeg:mpeg21:2007:01-PAMAF-NS PAMAF-FileAttribute-version1.1.xsd ">
    <Container>
        <!--Root Container-->
        <Container>
            <Descriptor>
                <Statement mimeType="text/xml">
                    <pamaf:FileSystemAttributes>
                        <pamaf:Name>Directory-1</pamaf:Name>
                        <pamaf:ParentPath ref="C://ParentDirectoryOfMyArchive"/>
                    </pamaf:FileSystemAttributes>
                </Statement>
            </Descriptor>
            <Item>
                <Descriptor>
```


Copyright International Organization for Standardization
Not for Resale
Provided by IHS under license with ISO
© ISO/IEC 2009 – All rights reserved
No reproduction or networking permitted without license from IHS

```
                    <Statement mimeType="text/xml">
                        <pamaf:FileSystemAttributes>
                            <pamaf:Name>File-1-UnderDirectory-1</pamaf:Name>
                            <pamaf:OriginalSize>1024</pamaf:OriginalSize>
                            <pamaf:EncodedPath charset="shift_JIS" original="yes">
                                !--put path here--
                            </pamaf:EncodedPath>
                            <pamaf:EncodedPath charset="EUC-KR">
                                !--put path here--
                            </pamaf:EncodedPath>
                            <pamaf:EncodedPath charset="UTF-8" default="yes">
                                !--put path here--
                            </pamaf:EncodedPath>
                            <pamaf:OriginalAttributes>
                                <System/>
                                <Hidden/>
                                <pamaf:OwnerRestrictions>
                                    <pamaf:NoExecute/>
                                </pamaf:OwnerRestrictions>
                            </pamaf:OriginalAttributes>
                            <pamaf:DefaultAttributes>
                                <pamaf:GroupRestrictions>
                                    <pamaf:NoWrite/>
                                    <pamaf:NoExecute/>
                                </pamaf:GroupRestrictions>
                                <pamaf:OtherRestrictions>
                                    <pamaf:NoWrite/>
                                    <pamaf:NoExecute/>
                                </pamaf:OtherRestrictions>
                            </pamaf:DefaultAttributes>
                        </pamaf:FileSystemAttributes>
                    </Statement>
                </Descriptor>
                <Component>
                    <Resource mimeType="audio/mp4" ref="myAudioFile"/>
                </Component>
            </Item>
        </Container>
    </Container>
</DIDL>
```

D.2 Example of Context Information

D.2.1 MPEG-7 MDS Profile PA-AF Context Information

When MPEG-7 MDS Profile for PA-AF is used for PA-AF Context Information, it shall be carried inside an XML instance of archive structure information (MPEG-21 DIDL 2nd Edition Profile for PA-AF). Table D.3 shows an example of description instances describing the media format of movie content. It shows general format information, such file format type, file size, and bit rate; visual component coding information, such as the encoding type and resolution (width and height); and audio component coding information, such as audio encoding type.

© ISO/IEC 2009 – All rights reserved
Copyright International Organization for Standardization
Not for Resale
Provided by IHS under license with ISO

Table D.3 — Describing an audio visual content

```
<!—MPEG-21 DID Structure here -->
<!-- MPEG-21 DID Structure here -->
<!-- MPEG-21 DID Structure here -->
<Mpeg7                                                    xmlns="urn:mpeg:mpeg7:schema:2001"
xmlns:xsi="http://www.w3.org/2001/XMLSchema-instance"
xsi:schemaLocation="urn:mpeg:mpeg7:schema:2001 Mpeg7-2001.xsd">
    <Description xsi:type="ContentEntityType">
        <MultimediaContent xsi:type="VideoType">
            <Video>
                <MediaInformation>
                    <MediaProfile>
                        <MediaFormat>
                            <Content href="MPEG7ContentCS:2001">
                                <Name>Video</Name>
                            </Content>
                            <FileFormat href="MPEG7FileFormatCS:2001">
                                <Name>MPEG-4 file format</Name>
                            </FileFormat>
                            <FileSize>887363584</FileSize>
                            <BitRate>30</BitRate>
                            <VisualCoding>
                                <Format href="MPEG7VisualCodingFormatCS:2001">
                                    <Name>MPEG-2</Name>
                                </Format>
                                <Frame height="480" width="640"/>
                            </VisualCoding>
                            <AudioCoding>
                                <Format href="MPEG7AudioCodingFormatCS:2001">
                                    <Name>MPEG-1 Layer 3</Name>
                                </Format>
                            </AudioCoding>
                        </MediaFormat>
                    </MediaProfile>
                </MediaInformation>
            </Video>
        </MultimediaContent>
    </Description>
</Mpeg7>
<!-- MPEG-21 DID Structure here -->
<!-- MPEG-21 DID Structure here -->
<!-- MPEG-21 DID Structure here -->
```

Table D.4 shows an example of description instances describing usage history and creation information. In this example, the content was archived (an action was added to the archive) by Joe Bloggs on January 7th, 2008 at 2 PM. The content is an audio file whose title is “One More Time, One More Chance” and performed by Masayoshi Yamazaki.

Copyright International Organization for Standardization
Not for Resale
Provided by IHS under license with ISO
© ISO/IEC 2009 – All rights reserved

Table D.4 — Describing creation information and usage history of an audio content

```
<!-- MPEG-21 DID Structure here -->
<!-- MPEG-21 DID Structure here -->
<!-- MPEG-21 DID Structure here -->
<Mpeg7 xmlns="urn:mpeg:mpeg7:schema:2001" xmlns:xsi="http://www.w3.org/2001/XMLSchema-instance" xsi:schemaLocation="urn:mpeg:mpeg7:schema:2001 Mpeg7-2001.xsd">
    <Description xsi:type="UserDescriptionType">
        <UsageHistory>
            <UserIdentifier>
                <Name>Joe Bloggs</Name>
            </UserIdentifier>
            <UserActionHistory>
                <UserActionList>
                    <ActionType href="PA-AF:ActionTypeCS:2008">
                        <Name>AddToArchive</Name>
                    </ActionType>
                    <UserAction>
                        <ActionTime>
                            <GeneralTime>
                                <TimePoint>2008-01-07T14:00:00</TimePoint>
                            </GeneralTime>
                        </ActionTime>
                        <ProgramIdentifier>
                            <!—shall contain MPEG-21 DII value -->
                        </ProgramIdentifier>
                    </UserAction>
                </UserActionList>
            </UserActionHistory>
        </UsageHistory>
    </Description>
    <Description xsi:type="ContentEntityType">
        <MultimediaContent xsi:type="AudioType">
            <Audio>
                <MediaInformation>
                    <MediaProfile>
                        <MediaFormat>
                            <Content href="MPEG7ContentCS:2001">
                                <Name>Audio</Name>
                            </Content>
                            <FileSize>9778135</FileSize>
                            <BitRate variable="true">234000</BitRate>
                            <AudioCoding>
                                <Format href="MPEG7AudioCodingFormatCS:2001">
                                    <Name>MPEG-1 Layer 3</Name>
                                </Format>
                                <Emphasis>none</Emphasis>
                            </AudioCoding>
                        </MediaFormat>
                    </MediaProfile>
                </MediaInformation>
                <CreationInformation>
                    <Creation>
                        <Title xml:lang="en">
                            One More Time, One More Chance
                        </Title>
                        <Abstract>
                            <FreeTextAnnotation>
                                Ending theme of animation "5 centimeter per second"
                            </FreeTextAnnotation>
```

No reproduction or networking permitted without license from IHS

© ISO/IEC 2009 – All rights reserved
Copyright International Organization for Standardization
Not for Resale
Provided by IHS under license with ISO

```
                    </Abstract>
                    <Creator>
                        <Role href="urn:mpeg:mpeg7:cs:RoleCS:2001:Artist"/>
                        <Agent xsi:type="PersonType">
                            <Name>
                                <GivenName>Masayoshi</GivenName>
                                <FamilyName>Yamazaki</FamilyName>
                            </Name>
                        </Agent>
                    </Creator>
                </Creation>
            </CreationInformation>
        </Audio>
    </MultimediaContent>
</Description>
</Mpeg7>
<!-- MPEG-21 DID Structure here -->
<!-- MPEG-21 DID Structure here -->
<!-- MPEG-21 DID Structure here -->
```

Table D.5 shows an example of the uses of the RelatedMaterial description tool. In this example, the subtitle file for movie content is in a separate file but archived in the same archive as the movie content itself. Hence, in the content description for the movie content, there are related materials which refer to the location of the subtitle file.

Table D.5 — Describing related material for movie subtitles

```
<!-- MPEG-21 DID Structure here -->
<!-- MPEG-21 DID Structure here -->
<!-- MPEG-21 DID Structure here -->
<Mpeg7 xmlns="urn:mpeg:mpeg7:schema:2001"
xmlns:xsi="http://www.w3.org/2001/XMLSchema-instance"
xsi:schemaLocation="urn:mpeg:mpeg7:schema:2001 mds-2001_for_pa_af.xsd">
    <Description xsi:type="ContentEntityType">
        <MultimediaContent xsi:type="VideoType">
            <Video>
                <MediaInformation>
                    <MediaProfile>
                        <MediaFormat>
                            <Content href="MPEG7ContentCS:2001">
                                <Name>Video</Name>
                            </Content>
                            <FileSize>733357674</FileSize>
                            <BitRate variable="true">24</BitRate>
                            <VisualCoding>
                                <Format href="MPEG7VisualCodingFormatCS:2001">
                                    <Name>MPEG-4 AVC</Name>
                                </Format>
                                <Frame height="480" width="852"/>
                            </VisualCoding>
                            <AudioCoding>
                                <Format href="MPEG7AudioCodingFormatCS:2001">
                                    <Name>MPEG-1 Layer 3</Name>
                                </Format>
                                <Sample bitsPer="16"/>
                                <Emphasis>none</Emphasis>
                            </AudioCoding>
                        </MediaFormat>
                    </MediaProfile>
```


Copyright International Organization for Standardization
Not for Resale
Provided by IHS under license with ISO
© ISO/IEC 2009 – All rights reserved

```
            </MediaInformation>
            <CreationInformation>
                <Creation>
                    <Title xml:lang="en">5 Centimeters per Second</Title>
                    <Title xml:lang="kr">초속 5센티미터</Title>
                    <Title xml:lang="jp">秒速 5 センチメートル</Title>
                    <Abstract>
                        <FreeTextAnnotation>
                            An animation movie by Makoto Shinkai
                        </FreeTextAnnotation>
                    </Abstract>
                    <Creator>
                        <Role href="urn:mpeg:mpeg7:cs:RoleCS:2001:Director"/>
                        <Agent xsi:type="PersonType">
                            <Name>
                                <GivenName>Shinkai</GivenName>
                                <FamilyName>Makoto</FamilyName>
                            </Name>
                        </Agent>
                    </Creator>
                    <Creator>
                        <Role href="urn:mpeg:mpeg7:cs:RoleCS:2001:Writer"/>
                        <Agent xsi:type="PersonType">
                            <Name>
                                <GivenName>Shinkai</GivenName>
                                <FamilyName>Makoto</FamilyName>
                            </Name>
                        </Agent>
                    </Creator>
                </Creation>
                <RelatedMaterial>
                    <MaterialType href="PA-AFContentCS:2008">
                        <Name>English subtitle</Name>
                    </MaterialType>
                    <MediaLocator>
                        <MediaUri>
                            file://my_pa_af.m21#ffp(item_name="en_subtitle.txt")
                        </MediaUri>
                    </MediaLocator>
                </RelatedMaterial>
                <RelatedMaterial>
                    <MaterialType href="PA-AFContentCS:2008">
                        <Name>Korean subtitle</Name>
                    </MaterialType>
                    <MediaLocator>
                        <MediaUri>
                            file://my_pa_af.m21#ffp(item_name="kr_subtitle.txt")
                        </MediaUri>
                    </MediaLocator>
                </RelatedMaterial>
            </CreationInformation>
        </Video>
    </MultimediaContent>
</Description>
</Mpeg7>
<!-- MPEG-21 DID Structure here -->
<!-- MPEG-21 DID Structure here -->
<!—MPEG-21 DID Structure here -->
```

© ISO/IEC 2009 – All rights reserved
Copyright International Organization for Standardization
Not for Resale
Provided by IHS under license with ISO

D.2.2 Application-Specific Context Information

When Non-MPEG-7 MDS Profile for PA-AF is used as PA-AF Context Information, it shall be carried as one of the archived files in the MDAT box of the PA-AF file. The mechanism to determine the location of this application-specific context information is described in 7.3.

Figure D.1 illustrates an example of the uses of application-specific context information. Input files for archiving consists of jpeg images and an xml instance that complies with the METS specification. The METS xml instance provides context information for the other jpeg images so that it can be considered as application-specific context information. The structure of the input files is illustrated in the upper part of Figure D.1; the structure of file format after archiving process is illustrated in the lower.

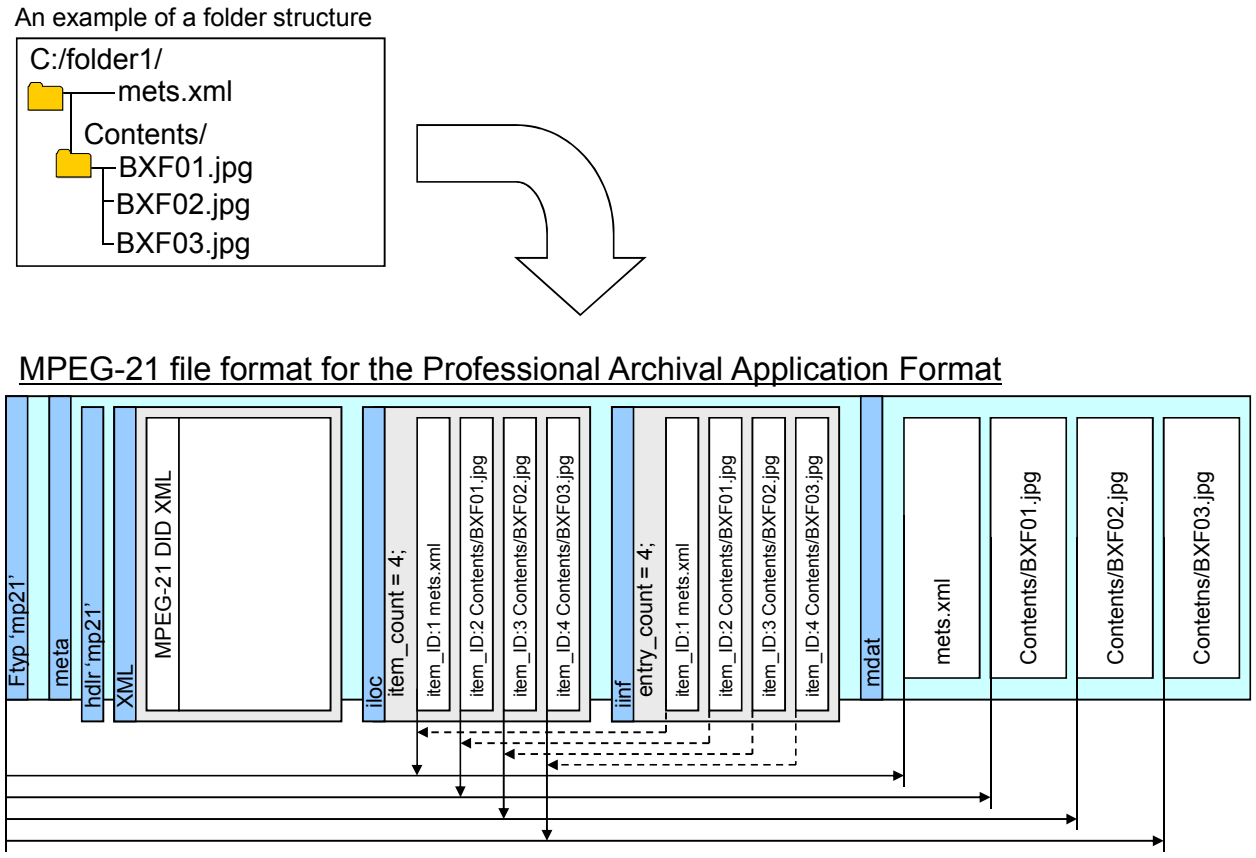

Figure D.1 — Example of file format structures for PA-AF with application-specific context information

Table D.6 lists contents of the METS xml instance described in Figure D.1.

No reproduction or networking permitted without license from IHS

Copyright International Organization for Standardization
Not for Resale
Provided by IHS under license with ISO
© ISO/IEC 2009 – All rights reserved

Table D.6 — Example of METS file

```
<?xml version="1.0" encoding=”UTF-8”?>
<mets:mets OBJID="info:object id/2008041001">
<mets:metsHdr CREATEDATE="2008-04-10T12:00:00+09:00">
<mets:agent ROLE="CREATOR">
<mets:name>name of the creator</mets:name>
</mets:agent>
</mets:metsHdr>

<mets:dmdSec ID="DM1">
  <mets:mdWrap MDTYPE="MODS">
    <mets:xmlData>
      <mods:mods>
        <mods:titleInfo>
          <mods:title>title</mods:title>
        </mods:titleInfo>
        <mods:name type="personal" >
          <mods:namePart>name of the auther</mods:namePart>
          <mods:role>
            <mods:roleTerm type="text">auther</mods:roleTerm>
          </mods:role>
        </mods:name>
        <mods:relatedItem type=“original”>
          <mods:originInfo>
            <mods:place><mods:placeTerm>Tokyo</mods:placeTerm></mods:place>
            <mods:publisher>name of the publisher</mods:publisher>
            <mods:dateIssued>1913-</mods:dateIssued>
          </mods:originInfo>
        </mods:relatedItem>
        <mods:classification>913.6</mods:classification>
      </mods:mods>
    </mets:xmlData>
  </mets:mdWrap>
</mets:dmdSec>

<mets:amdSec ID="AMD1">
  <mets:techMD ID="TECH01">
    <mets:mdWrap>
      <mets:xmlData>
        <!-- application specific context information for TECH01 -->
          <!-- e.g. fixty information for TECH01 -->
          <!-- e.g. size information for TECH01 -->
      </mets:xmlData>
    </mets:mdWrap>
  </mets:techMD>

  <mets:techMD ID="TECH02">
    <mets:mdWrap>
      <mets:xmlData>
        <!-- application specific context information for TECH02 -->
          <!-- e.g. fixty information for TECH02 -->
          <!-- e.g. size information for TECH02 -->

      </mets:xmlData>
    </mets:mdWrap>
  </mets:techMD>

  <mets:techMD ID="TECH03">
    <mets:mdWrap>
```

No reproduction or networking permitted without license from IHS

© ISO/IEC 2009 – All rights reserved
Provided by IHS under license with ISO
Copyright International Organization for Standardization
Not for Resale

```
      <mets:xmlData>
        <!-- application specific context information for TECH03 -->
          <!-- e.g. fixty information for TECH03 -->
          <!-- e.g. size information for TECH03 -->
      </mets:xmlData>
    </mets:mdWrap>
  </mets:techMD>

  <mets:rightsMD ID="RMD01">
    <mets:mdWrap>
      <mets:xmlData>
        <!-- rights information for this contents -->
      </mets:xmlData>
    </mets:mdWrap>
  </mets:rightsMD>

  <mets:digiprovMD STATUS=”PRIMARY”>
    <mets:mdWrap>
      <mets:xmlData>
        <!-- history of events -->
          <!-- e.g. date of creation -->
      </mets:xmlData>
    </mets:mdWrap>
  </mets:digiprovMD>

  <mets:digiprovMD ID=”PRO01”>
    <mets:mdWrap>
      <mets:xmlData>
        <!-- provenance information -->
          <!-- e.g. purpose of creation -->
      </mets:xmlData>
    </mets:mdWrap>
  </mets:digiprovMD>
</mets:amdSec>

<mets:fileSec>
  <mets:fileGrp>
    <mets:file ID="FID1"
      ADMID="TECH01 PRO01"
      MIMETYPE="image/jpeg"
      CREATED="2008-04-10T12:00:00+09:00">
      <mets:FLocat LOCTYPE="OTHER" xlink:href="Contents/BXF01.jpg" />
    </mets:file>
    <mets:file ID="FID2"
      ADMID="TECH02 PRO01"
      MIMETYPE="image/jpeg"
      CREATED="2008-04-10T12:00:00+09:00">
      <mets:FLocat LOCTYPE="OTHER" xlink:href="Contents/BXF02.jpg" />
    </mets:file>
    <mets:file ID="FID3"
      ADMID="TECH03 PRO01"
      MIMETYPE="image/jpeg"
      CREATED="2008-04-10T12:00:00+09:00">
      <mets:FLocat LOCTYPE="OTHER" xlink:href="Contents/BXF03.jpg" />
    </mets:file>
  </mets:fileGrp>
</mets:fileSec>

<mets:structMap>
  <mets:div DMDID="DM1" ADMID="RMD01" CONTENTIDS="info:contents ids/7890123456">
```


Copyright International Organization for Standardization
Not for Resale
Provided by IHS under license with ISO
© ISO/IEC 2009 – All rights reserved
No reproduction or networking permitted without license from IHS

```
    <fptr FILEID="FID1" />
    <fptr FILEID="FID2" />
    <fptr FILEID="FID3" />
  </mets:div>
</mets:structMap>
</mets:mets>
```

D.3 Example of Pre-processing Information

D.3.1 Archiving One File Without Compression

Table D.7 provides a DIDL instance example of PA-AF with one archived file.

Table D.7 — Archiving one file without compression

```
<?xml version="1.0" encoding="UTF-8"?>
<DIDL xmlns="urn:mpeg:mpeg21:2002:02-DIDL-NS"
xmlns:xsi="http://www.w3.org/2001/XMLSchema-instance"
xsi:schemaLocation="urn:mpeg:mpeg21:2002:02-DIDL-NS DIDLforPA-AF.xsd ">
    <Container>
        <Item>
            <Descriptor>
                <Statement mimeType="text/xml">
                <!--Put file attribute description here-->
                </Statement>
            </Descriptor>
            <Descriptor>
                <Statement mimeType="text/xml">
                <!--Put creation information here-->
                </Statement>
            </Descriptor>
            <Component>
                <Resource mimeType="image/jpeg" ref="MyImage.jpg"/>
            </Component>
        </Item>
    </Container>
</DIDL>
```

D.3.2 Archiving One File With Compression

Table D.8 provides a DIDL instance example of PA-AF with one .bwf audio file and compressed with MPEG-ALS lossless compression before being put in the archive container.

Table D.8 — Archiving one file with compression

```
<?xml version="1.0" encoding="UTF-8"?>
<DIDL xmlns="urn:mpeg:mpeg21:2002:02-DIDL-NS"
xmlns:xsi="http://www.w3.org/2001/XMLSchema-instance"
xsi:schemaLocation="urn:mpeg:mpeg21:2002:02-DIDL-NS DIDLforPA-AF.xsd ">
    <Container>
        <Item>
            <Descriptor>
                <Statement mimeType="text/xml">
                <!--Put file attribute description here-->
                </Statement>
            </Descriptor>
```

© ISO/IEC 2009 – All rights reserved
Copyright International Organization for Standardization
Not for Resale
Provided by IHS under license with ISO
No reproduction or networking permitted without license from IHS

```
            <Descriptor>
                <Statement mimeType="text/xml">
                <!--Put creation information here-->
                </Statement>
            </Descriptor>
            <Component>
                <Resource        mimeType="audio/x-bwf"        contentEncoding="audio/x-mp4als"
ref="MyAudio.bwf"/>
            </Component>
        </Item>
    </Container>
</DIDL>
```

D.3.3 Archiving Two Files in One Directory

Table D.9 provides a DIDL instance example of PA-AF with one .bwf audio file and compressed with MPEG-ALS lossless compression before being put in the archive container.

Table D.9 — Archiving two files in one directory

```
<?xml version="1.0" encoding="UTF-8"?>
<DIDL xmlns="urn:mpeg:mpeg21:2002:02-DIDL-NS"
xmlns:xsi="http://www.w3.org/2001/XMLSchema-instance"
xsi:schemaLocation="urn:mpeg:mpeg21:2002:02-DIDL-NS DIDLforPA-AF.xsd ">
    <Container>
        <Container>
            <Descriptor>
                <Statement mimeType="text/xml">
                <!--Put directory attribute description here-->
                </Statement>
            </Descriptor>
            <Item>
                <Descriptor>
                    <Statement mimeType="text/xml">
                    <!--Put file attribute description here-->
                    </Statement>
                </Descriptor>
                <Descriptor>
                    <Statement mimeType="text/xml">
                    <!--Put creation information here-->
                    </Statement>
                </Descriptor>
                <Component>
                    <Resource mimeType="audio/x-bwf" ref="MyAudio.bwf"/>
                </Component>
            </Item>
            <Item>
                <Descriptor>
                    <Statement mimeType="text/xml">
                    <!--Put file attribute description here-->
                    </Statement>
                </Descriptor>
                <Descriptor>
                    <Statement mimeType="text/xml">
                    <!--Put creation information here-->
                    </Statement>
                </Descriptor>
                <Component>
```


Copyright International Organization for Standardization
Not for Resale
Provided by IHS under license with ISO
© ISO/IEC 2009 – All rights reserved

```
                    <Resource mimeType="image/jpeg" ref="MyImage.jpg"/>
                </Component>
            </Item>
        </Container>
    </Container>
</DIDL>
```

D.3.4 Archiving a Compressed and Protected File

Tables D.10 and D.11 provide a DIDL instances examples of PA-AF that contain a compressed and protected file. Suppose that the file is compressed by MPEG-4 ALS compression first and then encrypted by an AES encryption tool. In Table D.10, the use of MPEG-4 ALS compression is described by using a ContentEncoding attribute and the use of AES encryption is described by using a MPEG-21 IPMP tool. Because ProtectedAsset element of IPMPDIDL does not allow occurrence of the ContentEncoding attribute, the ContentEncoding attribute should be describe in ContentInfo.

Table D.10 — Archiving a compressed and protected file with ContentEncoding

```
<?xml version="1.0" encoding="UTF-8"?>
<DIDL xmlns="urn:mpeg:mpeg21:2002:02-DIDL-NS" xmlns:dii="urn:mpeg:mpeg21:2002:01-DII-
NS" xmlns:ipmpdidl="urn:mpeg:mpeg21:2004:01-IPMPDIDL-NS"
xmlns:ipmpinfo="urn:mpeg:mpeg21:2004:01-IPMPINFO-BASE-NS"
xmlns:mx="urn:mpeg:mpeg21:2003:01-REL-MX-NS"
xmlns:xsi="http://www.w3.org/2001/XMLSchema-instance"
xsi:schemaLocation="urn:mpeg:mpeg21:2003:01-REL-MX-NS rel-mx.xsd
urn:mpeg:mpeg21:2004:01-IPMPINFO-BASE-NS IPMPGeneralInfo-PA-AF.xsd
urn:mpeg:mpeg21:2004:01-IPMPDIDL-NS IPMPDIDLforPA-MAF.xsd
urn:mpeg:mpeg21:2002:01-DII-NS dii.xsd">
    <Container>
        <Descriptor>
            <Statement mimeType="text/xml">
                <ipmpinfo:IPMPGeneralInfoDescriptor>
                    <ipmpinfo:ToolList>
                        <ipmpinfo:ToolDescription localID="AESEncrypt">
                            <ipmpinfo:IPMPToolID>http://www.w3.org/2001/04/xmlenc#aes128-
cbc</ipmpinfo:IPMPToolID>
                            <ipmpinfo:Remote ref="urn:IPMPToolsServer:ToolEnc005-3485"/>
                        </ipmpinfo:ToolDescription>
                    </ipmpinfo:ToolList>
                </ipmpinfo:IPMPGeneralInfoDescriptor>
            </Statement>
        </Descriptor>
        <Item id="MyAudioFile">
            <Descriptor>
                <Statement mimeType="text/xml">
                    <!--Put file attribute description here-->
                </Statement>
            </Descriptor>
            <Descriptor>
                <Statement mimeType="text/xml">
                    <!--Put creation information here-->
                </Statement>
            </Descriptor>
            <Component>
                <Resource mimeType="application/mp21-IPMP">
                    <ipmpdidl:ProtectedAsset mimeType="audio/x-bwf">
                        <ipmpdidl:Identifier>
                            <dii:Identifier>IPMPId001</dii:Identifier>
```

No reproduction or networking permitted without license from IHS

© ISO/IEC 2009 – All rights reserved
Copyright International Organization for Standardization
Not for Resale
Provided by IHS under license with ISO

```
                    </ipmpdidl:Identifier>
                    <ipmpdidl:Info>
                        <ipmpinfo:IPMPInfoDescriptor>
                            <ipmpinfo:Tool>
                                <ipmpinfo:ToolRef localidref="AESEncrypt"/>
                                <ipmpinfo:InitializationSettings>
                                    <ipmpinfo:InitializationData>
                                        <key_length>128</key_length>
                                        <operating_mode>PBE</operating_mode>
                                        <encrypt_format>Based64</encrypt_format>

    <initialization_vector>Adrad%daf&fa;</initialization_vector>
                                        <padding_scheme>PCK#5</padding_scheme>
                                    </ipmpinfo:InitializationData>
                                </ipmpinfo:InitializationSettings>
                            </ipmpinfo:Tool>
                        </ipmpinfo:IPMPInfoDescriptor>
                    </ipmpdidl:Info>
                    <ipmpdidl:ContentInfo>
                        <Resource mimeType="audio/x-bwf" contentEncoding="audio/x-
mp4als"/>
                    </ipmpdidl:ContentInfo>
                    <ipmpdidl:Contents ref="protectedAudio.au"/>
                </ipmpdidl:ProtectedAsset>
            </Resource>
        </Component>
    </Item>
</Container>
</DIDL>
```

In Table D.11, both MPEG-4 ALS compression and AES encryption are described by using MPEG-21 IPMP tool. In this case, the order of execution of these tools has to be described explicitly by “order” attribute. Not that tool whose “order” attribute is lower shall be executed first.

Table D.11 — Archiving compressed and protected file without ContentEncoding

```
<?xml version="1.0" encoding="UTF-8"?>
<DIDL xmlns="urn:mpeg:mpeg21:2002:02-DIDL-NS" xmlns:dii="urn:mpeg:mpeg21:2002:01-DII-
NS" xmlns:ipmpdidl="urn:mpeg:mpeg21:2004:01-IPMPDIDL-NS"
xmlns:ipmpinfo="urn:mpeg:mpeg21:2004:01-IPMPINFO-BASE-NS"
xmlns:mx="urn:mpeg:mpeg21:2003:01-REL-MX-NS"
xmlns:xsi="http://www.w3.org/2001/XMLSchema-instance"
xsi:schemaLocation="urn:mpeg:mpeg21:2003:01-REL-MX-NS rel-mx.xsd
urn:mpeg:mpeg21:2004:01-IPMPINFO-BASE-NS IPMPGeneralInfo-PA-AF.xsd
urn:mpeg:mpeg21:2004:01-IPMPDIDL-NS IPMPDIDLforPA-MAF.xsd
urn:mpeg:mpeg21:2002:01-DII-NS dii.xsd">
    <Container>
        <Descriptor>
            <Statement mimeType="text/xml">
                <ipmpinfo:IPMPGeneralInfoDescriptor>
                    <ipmpinfo:ToolList>
                        <ipmpinfo:ToolDescription localID="AESEncrypt">
                            <ipmpinfo:IPMPToolID>http://www.w3.org/2001/04/xmlenc#aes128-
cbc</ipmpinfo:IPMPToolID>
                            <ipmpinfo:Remote ref="urn:IPMPToolsServer:ToolEnc005-3485"/>
                        </ipmpinfo:ToolDescription>
                        <ipmpinfo:ToolDescription localID="MP4ALS">
                            <ipmpinfo:IPMPToolID>audio/x-mp4als</ipmpinfo:IPMPToolID>
                            <ipmpinfo:Remote ref="http://mytool.com/mp4als.exe"/>
```


Copyright International Organization for Standardization
Not for Resale
Provided by IHS under license with ISO
© ISO/IEC 2009 – All rights reserved

```
                    </ipmpinfo:ToolDescription>
                </ipmpinfo:ToolList>
            </ipmpinfo:IPMPGeneralInfoDescriptor>
        </Statement>
    </Descriptor>
    <Item id="MyAudioFile">
        <Descriptor>
            <Statement mimeType="text/xml">
                <!--Put file attribute description here-->
            </Statement>
        </Descriptor>
        <Descriptor>
            <Statement mimeType="text/xml">
                <!--Put creation information here-->
            </Statement>
        </Descriptor>
        <Component>
            <Resource mimeType="application/mp21-IPMP">
                <ipmpdidl:ProtectedAsset mimeType="audio/x-bwf">
                    <ipmpdidl:Identifier>
                        <dii:Identifier>IPMPId001</dii:Identifier>
                    </ipmpdidl:Identifier>
                    <ipmpdidl:Info>
                        <ipmpinfo:IPMPInfoDescriptor>
                            <ipmpinfo:Tool order="1">
                                <ipmpinfo:ToolRef localidref="AESEncrypt"/>
                                <ipmpinfo:InitializationSettings>
                                    <ipmpinfo:InitializationData>
                                        <key_length>128</key_length>
                                        <operating_mode>PBE</operating_mode>
                                        <encrypt_format>Based64</encrypt_format>

<initialization_vector>Adrad%daf&fa;</initialization_vector>
                                        <padding_scheme>PCK#5</padding_scheme>
                                    </ipmpinfo:InitializationData>
                                </ipmpinfo:InitializationSettings>
                            </ipmpinfo:Tool>
                            <ipmpinfo:Tool order="2">
                                <ipmpinfo:ToolRef localidref="MP4ALS"/>
                            </ipmpinfo:Tool>
                        </ipmpinfo:IPMPInfoDescriptor>
                    </ipmpdidl:Info>
                    <ipmpdidl:Contents ref="protectedAudio.au"/>
                </ipmpdidl:ProtectedAsset>
            </Resource>
        </Component>
    </Item>
</Container>
</DIDL>
```

D.3.5 Archiving Governed and Protected File

Table D.12 provides a DIDL instance example of PA-AF that contains a governed and protected file. The file is protected with an AES encryption tool and the use of the file is allowed only during the year 2007.

--`,,```,,,,````-`-`,,`,,`,`,,`---

© ISO/IEC 2009 – All rights reserved
Provided by IHS under license with ISO

Copyright International Organization for Standardization
Not for Resale

Table D.12 — Archiving governed and protected file

```
<?xml version="1.0" encoding="UTF-8"?>
<DIDL xmlns="urn:mpeg:mpeg21:2002:02-DIDL-NS"
xmlns:dii="urn:mpeg:mpeg21:2002:01-DII-NS"
xmlns:ipmpdidl="urn:mpeg:mpeg21:2004:01-IPMPDIDL-NS"
xmlns:ipmpinfo="urn:mpeg:mpeg21:2004:01-IPMPINFO-BASE-NS"
xmlns:mx="urn:mpeg:mpeg21:2003:01-REL-MX-NS"
xmlns:xsi="http://www.w3.org/2001/XMLSchema-instance"
xsi:schemaLocation="urn:mpeg:mpeg21:2003:01-REL-MX-NS rel-mx.xsd
urn:mpeg:mpeg21:2004:01-IPMPINFO-BASE-NS IPMPGeneralInfo-PA-AF.xsd
urn:mpeg:mpeg21:2004:01-IPMPDIDL-NS IPMPDIDLforPA-AF.xsd
urn:mpeg:mpeg21:2002:01-DII-NS dii.xsd">
    <Container>
        <Descriptor>
            <Statement mimeType="text/xml">
                <ipmpinfo:IPMPGeneralInfoDescriptor>
                    <ipmpinfo:ToolList>
                        <ipmpinfo:ToolDescription localID="AESEncrypt">
                            <ipmpinfo:IPMPToolID>http://www.w3.org/2001/04/xmlenc#aes128-
cbc</ipmpinfo:IPMPToolID>
                            <ipmpinfo:Remote ref="urn:IPMPToolsServer:ToolEnc005-3485"/>
                        </ipmpinfo:ToolDescription>
                    </ipmpinfo:ToolList>
                    <ipmpinfo:LicenseCollection>
                        <ipmpinfo:RightsDescriptor>
                            <ipmpinfo:License>
                                <r:license>
                                    <r:grant>
                                        <mx:play/>
                                        <mx:diReference>
                                            <mx:identifier>IPMPId001</mx:identifier>
                                        </mx:diReference>
                                        <r:allConditions>
                                            <r:validityInterval>
                                                <r:notBefore>2007-01-01T00:00:00</r:notBefore>
                                                <r:notAfter>2007-12-31T12:59:59</r:notAfter>
                                            </r:validityInterval>
                                        </r:allConditions>
                                    </r:grant>
                                </r:license>
                            </ipmpinfo:License>
                        </ipmpinfo:RightsDescriptor>
                    </ipmpinfo:LicenseCollection>
                </ipmpinfo:IPMPGeneralInfoDescriptor>
            </Statement>
        </Descriptor>
        <Item id="MyAudioFile">
            <Descriptor>
                <Statement mimeType="text/xml">
                    <!--Put file attribute description here-->
                </Statement>
            </Descriptor>
            <Descriptor>
                <Statement mimeType="text/xml">
                    <!--Put creation information here-->
                </Statement>
            </Descriptor>
            <Component>
                <Resource mimeType="application/mp21-IPMP">
```


Copyright International Organization for Standardization
Not for Resale
Provided by IHS under license with ISO
© ISO/IEC 2009 – All rights reserved

```
                    <ipmpdidl:ProtectedAsset mimeType="audio/raw">
                        <ipmpdidl:Identifier>
                            <dii:Identifier>IPMPId001</dii:Identifier>
                        </ipmpdidl:Identifier>
                        <ipmpdidl:Info>
                            <ipmpinfo:IPMPInfoDescriptor>
                                <ipmpinfo:Tool>
                                    <ipmpinfo:ToolRef localidref="AESEncrypt"/>
                                    <ipmpinfo:InitializationSettings>
                                        <ipmpinfo:InitializationData>
                                            <key_length>128</key_length>
                                            <operating_mode>PBE</operating_mode>
                                            <encrypt_format>Based64</encrypt_format>

    <initialization_vector>Adrad%daf&fa;</initialization_vector>
                                            <padding_scheme>PCK#5</padding_scheme>
                                        </ipmpinfo:InitializationData>
                                    </ipmpinfo:InitializationSettings>
                                </ipmpinfo:Tool>
                            </ipmpinfo:IPMPInfoDescriptor>
                        </ipmpdidl:Info>
                        <ipmpdidl:Contents ref="protectedAudio.au"/>
                    </ipmpdidl:ProtectedAsset>
                </Resource>
            </Component>
        </Item>
    </Container>
</DIDL>
```

D.3.6 Archiving File with Digital Signature for Integrity Checking

Table D.13 provides a DIDL instance example of PA-AF that contains a content information file. The archived file is signed digitally to enable checking for its integrity in the future.

Table D.13 — Archiving a digitally signed file

```
<?xml version="1.0" encoding="UTF-8"?>
<DIDL xmlns="urn:mpeg:mpeg21:2002:02-DIDL-NS"
xmlns:dii="urn:mpeg:mpeg21:2002:01-DII-NS"
xmlns:ipmpdidl="urn:mpeg:mpeg21:2004:01-IPMPDIDL-NS"
xmlns:ipmpinfo="urn:mpeg:mpeg21:2004:01-IPMPINFO-BASE-NS"
xmlns:mx="urn:mpeg:mpeg21:2003:01-REL-MX-NS"
xmlns:xsi="http://www.w3.org/2001/XMLSchema-instance"
xsi:schemaLocation="urn:mpeg:mpeg21:2003:01-REL-MX-NS rel-mx.xsd
urn:mpeg:mpeg21:2004:01-IPMPINFO-BASE-NS IPMPGeneralInfo-PA-AF.xsd
urn:mpeg:mpeg21:2004:01-IPMPDIDL-NS IPMPDIDLforPA-AF.xsd
urn:mpeg:mpeg21:2002:01-DII-NS dii.xsd">
    <Container>
        <Item id="MyAudioFile">
            <Descriptor>
                <Statement mimeType="text/xml">
                    <!--Put file attribute description here-->
                </Statement>
            </Descriptor>
            <Descriptor>
                <Statement mimeType="text/xml">
                    <!--Put creation information here-->
                </Statement>
```

No reproduction or networking permitted without license from IHS

© ISO/IEC 2009 – All rights reserved
Copyright International Organization for Standardization
Not for Resale
Provided by IHS under license with ISO

```
            </Descriptor>
            <Component>
                <Resource mimeType="application/mp21-IPMP">
                    <ipmpdidl:ProtectedAsset mimeType="audio/raw">
                        <ipmpdidl:Info>
                            <ipmpinfo:IPMPInfoDescriptor>
                                <dsig:Signature Id="ToolSignature">
                                    <dsig:SignedInfo>
                                        <dsig:CanonicalizationMethod
Algorithm="http://www.w3.org/TR/2001/REC-xml-c14n-20010315"/>
                                        <dsig:SignatureMethod
Algorithm="http://www.w3.org/2000/09/xmldsig#dsa-sha1"/>
                                        <dsig:Reference        URI="http://www.w3.org/TR/2000/REC-
xhtml1-20000126/">
                                            <dsig:Transforms>
                                                <dsig:Transform
Algorithm="http://www.w3.org/TR/2001/REC-xml-c14n-20010315"/>
                                            </dsig:Transforms>
                                            <dsig:DigestMethod
Algorithm="http://www.w3.org/2000/09/xmldsig#sha1"/>

    <dsig:DigestValue>rqfdsvuiojbew9$#$fda4321hjjl</dsig:DigestValue>
                                        </dsig:Reference>
                                    </dsig:SignedInfo>

    <dsig:SignatureValue>fdafdasfdasrrcvarew2432dfdaf</dsig:SignatureValue>
                                </dsig:Signature>
                            </ipmpinfo:IPMPInfoDescriptor>
                        </ipmpdidl:Info>
                        <ipmpdidl:Contents ref="protectedAudio.au"/>
                    </ipmpdidl:ProtectedAsset>
                </Resource>
            </Component>
        </Item>
    </Container>
</DIDL>
```

D.3.7 Archive with Protected Metadata

Tables D.14, D.15, and D.16 provide DIDL instance examples of protected metadata. Protection for the DIDL instance in Table D.14 is applied to a Statement element that carries the file attribute model. Protection for the DIDL instance in Table D.15 is applied to a Statement element that carries context information. Protection for the DIDL instance in Table D.16 is applied to a Resource element that carries information about an archived file.

Particularly for a protected Resource element, since the URI location or original naming location is protected, it is strongly recommended that ipmpdidl:Identifier presents and its value should match with item_name for the associated file in the IINF box (see 9.3 and the example in Annex E.3).

Copyright International Organization for Standardization
Not for Resale
Provided by IHS under license with ISO
© ISO/IEC 2009 – All rights reserved
No reproduction or networking permitted without license from IHS

Table D.14 — Archiving with protected file attributes

```
<?xml version="1.0" encoding="UTF-8"?>
<DIDL xmlns="urn:mpeg:mpeg21:2002:02-DIDL-NS" xmlns:dii="urn:mpeg:mpeg21:2002:01-DII-NS"
xmlns:ipmpdidl="urn:mpeg:mpeg21:2004:01-IPMPDIDL-NS"
xmlns:ipmpinfo="urn:mpeg:mpeg21:2004:01-IPMPINFO-BASE-NS"
xmlns:mx="urn:mpeg:mpeg21:2003:01-REL-MX-NS"
xmlns:xsi="http://www.w3.org/2001/XMLSchema-instance"
xsi:schemaLocation="urn:mpeg:mpeg21:2003:01-REL-MX-NS rel-mx.xsd
urn:mpeg:mpeg21:2004:01-IPMPINFO-BASE-NS IPMPGeneralInfo-PA-AF.xsd
urn:mpeg:mpeg21:2004:01-IPMPDIDL-NS IPMPDIDLforPA-MAF.xsd
urn:mpeg:mpeg21:2002:01-DII-NS dii.xsd">
    <Container>
        <Descriptor>
            <Statement mimeType="text/xml">
                <ipmpinfo:IPMPGeneralInfoDescriptor>
                    <ipmpinfo:ToolList>
                        <ipmpinfo:ToolDescription localID="AESEncrypt">
                            <ipmpinfo:IPMPToolID>http://www.w3.org/2001/04/xmlenc#aes128-cbc</ipmpinfo:IPMPToolID>
                            <ipmpinfo:Remote ref="urn:IPMPToolsServer:ToolEnc005-3485"/>
                        </ipmpinfo:ToolDescription>
                    </ipmpinfo:ToolList>
                </ipmpinfo:IPMPGeneralInfoDescriptor>
            </Statement>
        </Descriptor>
        <Item id="MyAudioFile">
            <Descriptor>
                <ipmpdidl:Statement>
                    <ipmpdidl:Info>
                        <ipmpinfo:IPMPInfoDescriptor>
                            <ipmpinfo:Tool>
                                <ipmpinfo:ToolRef localidref="AESEncrypt"/>
                                <ipmpinfo:InitializationSettings>
                                    <ipmpinfo:InitializationData>
                                        <key_length>128</key_length>
                                        <operating_mode>PBE</operating_mode>
                                        <encrypt_format>Based64</encrypt_format>
                                        <initialization_vector>Adrad%daf&fa;</initialization_vector>
                                        <padding_scheme>PCK#5</padding_scheme>
                                    </ipmpinfo:InitializationData>
                                </ipmpinfo:InitializationSettings>
                            </ipmpinfo:Tool>
                        </ipmpinfo:IPMPInfoDescriptor>
                    </ipmpdidl:Info>
                    <ipmpdidl:Contents><!--Put encrypted file attribute description in base64 here--></ipmpdidl:Contents>
                </ipmpdidl:Statement>
            </Descriptor>
            <Descriptor>
                <Statement mimeType="text/xml">
                    <!--Put context information here-->
                </Statement>
            </Descriptor>
            <Component>
                <Resource mimeType="audio/x-bwf" ref="MyAudio.bwf"/>
            </Component>
        </Item>
    </Container>
</DIDL>
```

© ISO/IEC 2009 – All rights reserved
Copyright International Organization for Standardization
Not for Resale
Provided by IHS under license with ISO

Table D.15 — Archiving with protected context information

```
<DIDL xmlns="urn:mpeg:mpeg21:2002:02-DIDL-NS" xmlns:dii="urn:mpeg:mpeg21:2002:01-DII-
NS"
xmlns:ipmpdidl="urn:mpeg:mpeg21:2004:01-IPMPDIDL-NS"
xmlns:ipmpinfo="urn:mpeg:mpeg21:2004:01-IPMPINFO-BASE-NS"
xmlns:mx="urn:mpeg:mpeg21:2003:01-REL-MX-NS"
xmlns:xsi="http://www.w3.org/2001/XMLSchema-instance"
xsi:schemaLocation="urn:mpeg:mpeg21:2003:01-REL-MX-NS rel-mx.xsd
urn:mpeg:mpeg21:2004:01-IPMPINFO-BASE-NS IPMPGeneralInfo-PA-AF.xsd
urn:mpeg:mpeg21:2004:01-IPMPDIDL-NS IPMPDIDLforPA-MAF.xsd
urn:mpeg:mpeg21:2002:01-DII-NS dii.xsd">
    <Container>
        <Descriptor>
            <Statement mimeType="text/xml">
                <ipmpinfo:IPMPGeneralInfoDescriptor>
                    <ipmpinfo:ToolList>
                        <ipmpinfo:ToolDescription localID="AESEncrypt">
                            <ipmpinfo:IPMPToolID>http://www.w3.org/2001/04/xmlenc#aes128-
cbc</ipmpinfo:IPMPToolID>
                            <ipmpinfo:Remote ref="urn:IPMPToolsServer:ToolEnc005-3485"/>
                        </ipmpinfo:ToolDescription>
                    </ipmpinfo:ToolList>
                </ipmpinfo:IPMPGeneralInfoDescriptor>
            </Statement>
        </Descriptor>
        <Item id="MyAudioFile">
            <Descriptor>
                <Statement mimeType="text/xml">
                    <!--Put file attribute description here-->
                </Statement>
            </Descriptor>
            <Descriptor>
                <ipmpdidl:Statement>
                    <ipmpdidl:Info>
                        <ipmpinfo:IPMPInfoDescriptor>
                            <ipmpinfo:Tool>
                                <ipmpinfo:ToolRef localidref="AESEncrypt"/>
                                <ipmpinfo:InitializationSettings>
                                    <ipmpinfo:InitializationData>
                                        <key_length>128</key_length>
                                        <operating_mode>PBE</operating_mode>
                                        <encrypt_format>Based64</encrypt_format>
                                        <initialization_vector>Adrad%daf&fa;</initialization_vector>
                                        <padding_scheme>PCK#5</padding_scheme>
                                    </ipmpinfo:InitializationData>
                                </ipmpinfo:InitializationSettings>
                            </ipmpinfo:Tool>
                        </ipmpinfo:IPMPInfoDescriptor>
                    </ipmpdidl:Info>
                    <ipmpdidl:Contents><!--Put encrypted context information base64 here--
></ipmpdidl:Contents>
                </ipmpdidl:Statement>
            </Descriptor>
            <Component>
                <Resource mimeType="audio/x-bwf" ref="MyAudio.bwf"/>
            </Component>
        </Item>
    </Container>
</DIDL>
```


Copyright International Organization for Standardization
Not for Resale
Provided by IHS under license with ISO
© ISO/IEC 2009 – All rights reserved

Table D.16 — Archiving with protected Resource elements

```
<?xml version="1.0" encoding="UTF-8"?>
<DIDL xmlns="urn:mpeg:mpeg21:2002:02-DIDL-NS" xmlns:dii="urn:mpeg:mpeg21:2002:01-DII-NS"
xmlns:ipmpdidl="urn:mpeg:mpeg21:2004:01-IPMPDIDL-NS"
xmlns:ipmpinfo="urn:mpeg:mpeg21:2004:01-IPMPINFO-BASE-NS"
xmlns:mx="urn:mpeg:mpeg21:2003:01-REL-MX-NS"
xmlns:xsi="http://www.w3.org/2001/XMLSchema-instance"
xsi:schemaLocation="urn:mpeg:mpeg21:2003:01-REL-MX-NS rel-mx.xsd
urn:mpeg:mpeg21:2004:01-IPMPINFO-BASE-NS IPMPGeneralInfo-PA-AF.xsd
urn:mpeg:mpeg21:2004:01-IPMPDIDL-NS IPMPDIDLforPA-MAF.xsd
urn:mpeg:mpeg21:2002:01-DII-NS dii.xsd">
    <Container>
        <Descriptor>
            <Statement mimeType="text/xml">
                <ipmpinfo:IPMPGeneralInfoDescriptor>
                    <ipmpinfo:ToolList>
                        <ipmpinfo:ToolDescription localID="AESEncrypt">
                            <ipmpinfo:IPMPToolID>http://www.w3.org/2001/04/xmlenc#aes128-
cbc</ipmpinfo:IPMPToolID>
                            <ipmpinfo:Remote ref="urn:IPMPToolsServer:ToolEnc005-3485"/>
                        </ipmpinfo:ToolDescription>
                    </ipmpinfo:ToolList>
                </ipmpinfo:IPMPGeneralInfoDescriptor>
            </Statement>
        </Descriptor>
        <Item id="MyAudioFile">
            <Descriptor>
                <Statement mimeType="text/xml">
                    <!--Put file attribute description here-->
                </Statement>
            </Descriptor>
            <Descriptor>
                <Statement mimeType="text/xml">
                    <!--Put creation information here-->
                </Statement>
            </Descriptor>
            <Component>
                <ipmpdidl:Resource>
                    <ipmpdidl:Identifier>
                        <dii:Identifier>ProtectedFile-1</dii:Identifier>
                    </ipmpdidl:Identifier>
                    <ipmpdidl:Info>
                        <ipmpinfo:IPMPInfoDescriptor>
                            <ipmpinfo:Tool>
                                <ipmpinfo:ToolRef localidref="AESEncrypt"/>
                                <ipmpinfo:InitializationSettings>
                                    <ipmpinfo:InitializationData>
                                        <key_length>128</key_length>
                                        <operating_mode>PBE</operating_mode>
                                        <encrypt_format>Based64</encrypt_format>
                                        <initialization_vector>Adrad%daf&fa;</initialization_vector>
                                        <padding_scheme>PCK#5</padding_scheme>
                                    </ipmpinfo:InitializationData>
                                </ipmpinfo:InitializationSettings>
                            </ipmpinfo:Tool>
                        </ipmpinfo:IPMPInfoDescriptor>
                    </ipmpdidl:Info>
                    <ipmpdidl:Contents><!--Put encrypted Resource element in base64 here--
```

© ISO/IEC 2009 – All rights reserved
Copyright International Organization for Standardization
Not for Resale
Provided by IHS under license with ISO

```
></ipmpdidl:Contents>
                </ipmpdidl:Resource>
            </Component>
        </Item>
    </Container>
</DIDL>
```


Copyright International Organization for Standardization
Not for Resale
Provided by IHS under license with ISO
© ISO/IEC 2009 – All rights reserved

Annex E
(informative)

Example of File Format Structures for PA-AF

E.1 File Format Structure Example

Figure E.1 shows an example of file format structures for Professional Archival AF. Archived files are stored in MDAT boxes either in their original stream or in their form after preprocessing steps, such as lossless compression and protection. The physical location of each archived file in the MDAT is described by information in iinf (Item Information) and iloc (item location). In addition, the logical structure (model) of the archived files is described by MPEG-21 DIDL, which is stored in the XML box.

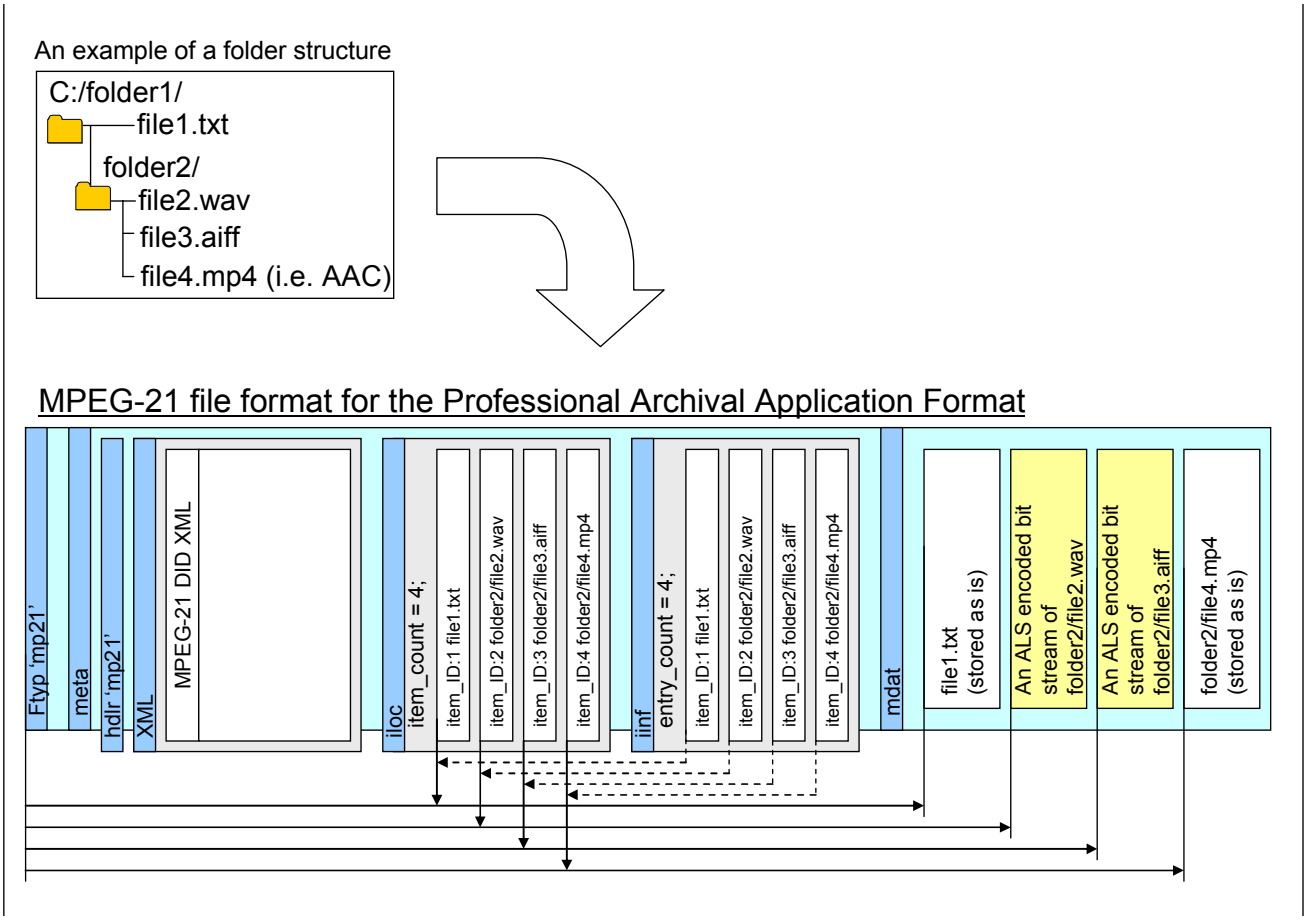

Figure E.1 — Example of file format structure for Professional Archival AF

E.2 The Item Location Box and the Item Information Box

Table E.1 shows an example of associated information of archived files stored in Professional Archival AF as illustrated in Figure E.1.

© ISO/IEC 2009 – All rights reserved
Copyright International Organization for Standardization
Not for Resale
Provided by IHS under license with ISO

Table E.1 — Example of IINF and ILOC boxes' content

```
ftype box:
   major-brand = 'mp21', compatible-brands = 'mp21'
meta box: (container)
   handler box: hdr='mp21'
   XML box:  contains the MPEG-21 DID XML (This will be described in a latter
chapter.)

   Item Location:
      item_count = 4;
      item_ID = 1, data_reference_index = 0, extent_count = 1
            , extent_offset = X1, extent_length = Y1, base_offset = X1;
      item_ID = 2, data_reference_index = 0, extent_count = 1
            , extent_offset = X2, extent_length = Y2, base_offset = X2;
      item_ID = 3, data_reference_index = 0, extent_count = 1
            , extent_offset = X3, extent_length = Y3, base_offset = X3;
      item_ID = 4, data_reference_index = 0, extent_count = 1
            , extent_offset = X4, extent_length = Y4, base_offset = X4;

   Item Information:
      entry_count = 4;
      item_ID = 1, item_protection_index = 0 (unused)
            , item_name = "file1.txt", content_type = "text/plain"
            , content_encoding = "" (binary);
      item_ID = 2, item_protection_index = 0 (unused)
            , item_name = "folder2/file2.wav", content_type = "audio/x-wav"
            , content_encoding = "audio/x-mp4als" (encoded with MPEG-4 ALS and
            contained in   MP4ff);
      item_ID = 3, item_protection_index = 0 (unused)
            , item_name = "folder2/file3.aiff", content_type = "audio/x-aiff"
            , content_encoding = "audio/x-mp4als" (encoded with MPEG-4 ALS and
            contained in  MP4ff);
      item_ID = 3, item_protection_index = 0 (unused)
            , item_name = "folder2/file4.mp4", content_type = "audio/mp4"
            , content_encoding = "" (binary);

Media data box:
A binary data of “file1.txt” (at file offset X1, with length Y1);
   An ALS encoded binary data of "folder2/file2.wav"
   (at file offset X2, with length Y2);
   An ALS encoded and mp4 file formatted binary data of “folder2/file3.aiff”
   (at file offset X3, with length Y3);
   A binary data of "folder2/file4.mp4" (at file offset X4, with length Y4);
```

E.3 Example of Item Information Box of PA-AF File with Protected Resource Element

Table E.2 shows an example of IINF contents with a protected Resource element. Let the DIDL instance in Table D.16 of Annex D.3.7 be an instance of Preservation Description Information. There is only one file to be preserved and the Resource element that models the location of this file is encrypted so that the original URI naming is unknown. Reference to the file is described by the ipmpdidl:Identifier element under the Resource element and its value is “ProtectedFile-1”. Therefore, IINF’s item_name for the file must match the value of the ipmpdidl:Identifier.

--`,,```,,,,````-`-`,,`,,`,`,,`---

Provided by IHS under license with ISO © ISO/IEC 2009 – All rights reserved
Copyright International Organization for Standardization
Not for Resale

Table E.2 — Example of IINF with protected Resource elements

```
ftype box:
   major-brand = 'mp21', compatible-brands = 'mp21'
meta box: (container)
   handler box: hdr='mp21'
   XML box:  contains the MPEG-21 DID XML (This will be described in a latter
chapter.)

   Item Location:
      item_count = 1;
      item_ID = 1, data_reference_index = 0, extent_count = 1
            , extent_offset = X1, extent_length = Y1, base_offset = X1;

   Item Information:
      entry_count = 1;
      item_ID = 1, item_protection_index = 0 (unused)
            , item_name = "ProtectedFile-1", content_type = "text/plain"
            , content_encoding = "" (binary);

Media data box:
A binary data of "file1.txt" (at file offset X1, with length Y1);
```

No reproduction or networking permitted without license from IHS

© ISO/IEC 2009 – All rights reserved
Copyright International Organization for Standardization
Not for Resale
Provided by IHS under license with ISO

Annex F
(informative)

Showcase: Use of Relative URI in Archived Webpage Files

The following showcase exhibits the benefit of using relative URI in archiving internet page files. For example, suppose that the complete internet page files are Index.html (bootstrap file/entry page), file2.html, file3.jpg, and file4.mp4. The directory structure of those files is as shown in the upper part of Figure F.1.

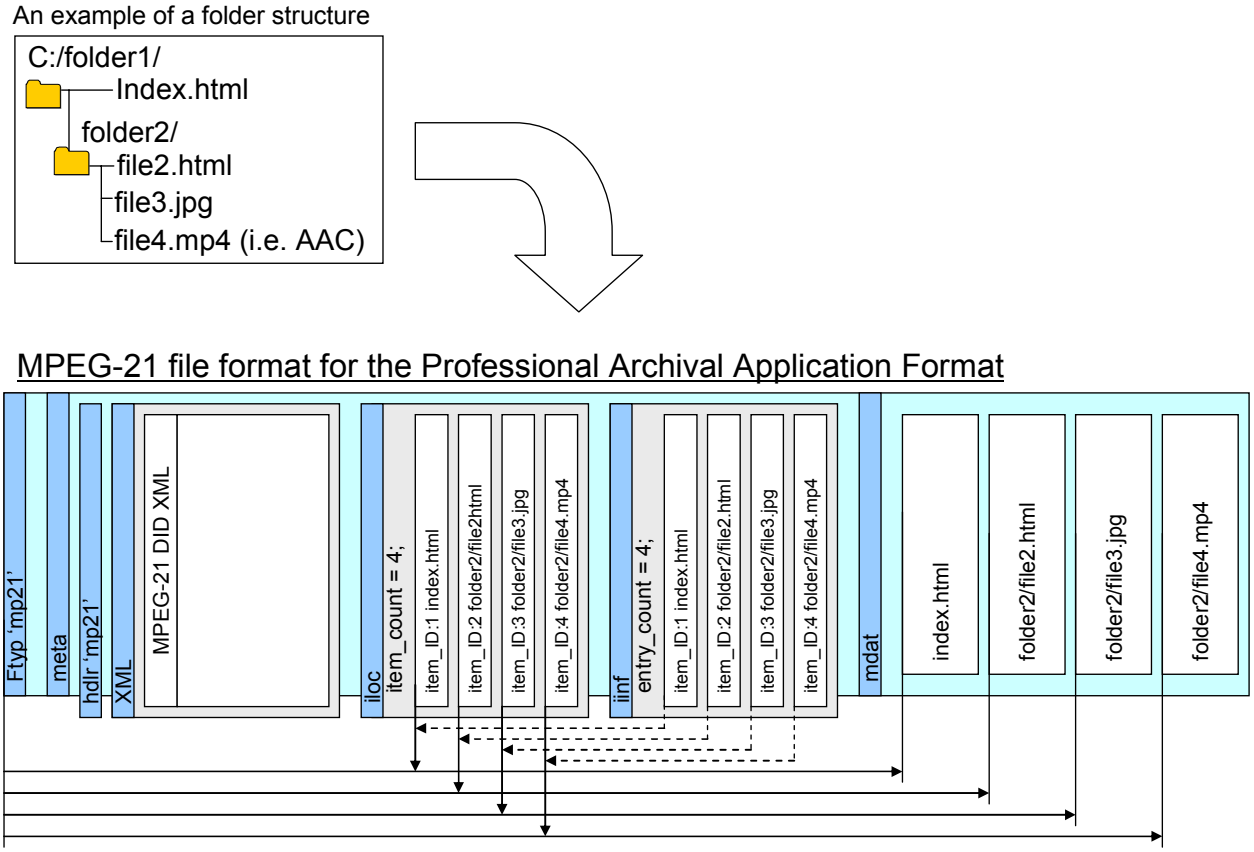

Figure F.1 — Example of archived html files

Because Index.html is the entry page, its path is used as the root URI path. The URI paths for the remaining files are relative to the URI path of Index.html. As shown in the ILOC box in Figure F.1, the URI path of those internet page files is given in Table F.1.

Copyright International Organization for Standardization
Not for Resale
Provided by IHS under license with ISO
© ISO/IEC 2009 – All rights reserved
No reproduction or networking permitted without license from IHS

Table F.1 — Relative path of input files

File	URI Path
index.html	index.html
file2.html	folder2/file2.html
file3.jpg	folder2/file3.jpg
file4.mp4	folder2/file4.mp4

Table F.2 lists an example of the html contents of the index.html. The use of relative URI when archiving internet page files allows a PA-AF compliance browser to locate and extract files that must be loaded. For example, at first, by default, the browser extracts and renders/displays the index.html. If it receives a mouse-click response from the user to “reference to file2.html”, it has to load and display file2.html. The address of file2.html in index.html is defined by “folder2/file2.html”. The address of file2.html in index.html matches the ILOC address of file2.html in the PA-AF file. Hence, by simply matching them, the browser can easily locate and extract file2.html without having to extract the whole PA-AF file.

Table F.2 — An example of URI links to archived content information

```
<!DOCTYPE HTML PUBLIC "-//W3C//DTD HTML 4.1 Transitional//EN">
<HTML><HEAD><TITLE>My Index Page</TITLE>
<BODY bgcolor="#000000" text="#ccffcc" link="#cc6666" vlink="#999999" alink="#cccc99">
<a href="folder2/file2.html">reference to file2.html</a><br>
<hr>
<table>
<tr>
<td><IMG src="folder2/file3.jpg"></td>
<td>
<h1>Description text</h1>
<a href="folder2/file4.mp4">reference to file4.mp4</a><br>
</td>
</tr>
</table>
</body>
</html>
```

© ISO/IEC 2009 – All rights reserved
Provided by IHS under license with ISO
Copyright International Organization for Standardization
Not for Resale

Annex G
(informative)

Showcase: Archiving Files into Several PA-AF Files

Suppose input files to be archived are as follows:

- an HTML file (name: Index.html; size: 100KB);
- an text file (name: Content.txt; size: 400KB);
- an JPEG image file (name: Image.jpg; size: 5MB).

The output archive size is restricted not to exceed 3MB. Therefore, the input files should be archived into two PA-AF files. They are File1.paf, which contains Index.html, Content.txt, and the first fragment of Image.jpg (byte 0 ~ byte 2.5MB), and File2.paf, which contains the second fragment of Image.jpg (byte 2.5MB + 1 ~ end). The DIDL instances in each file that model such a situation are shown in Tables G.1 and G.2.

Table G.1 — DIDL instance of File1.paf

```
<?xml version="1.0" encoding="UTF-8"?>
<DIDL xmlns="urn:mpeg:mpeg21:2002:02-DIDL-NS"
xmlns:xsi="http://www.w3.org/2001/XMLSchema-instance"
xsi:schemaLocation="urn:mpeg:mpeg21:2002:02-DIDL-NS DIDLforPA-MAF.xsd ">
    <Container>
        <Item>
            <Component>
                <Resource ref="Index.html"/>
            </Component>
        </Item>
        <Item>
            <Component>
                <Resource ref="Content.txt"/>
            </Component>
        </Item>
        <Item>
            <Component>
                <Resource ref="Image.jpg"/>
            </Component>
            <Component>
                <Resource ref="File://File2.paf#Image.jpg"/>
            </Component>
        </Item>
    </Container>
</DIDL>
```

--`,,```,,,,````-`-`,,`,,`,`,,`---

Copyright International Organization for Standardization
Not for Resale
Provided by IHS under license with ISO
© ISO/IEC 2009 – All rights reserved

Table G.2 — DIDL instance of File2.paf

```
<?xml version="1.0" encoding="UTF-8"?>
<DIDL xmlns="urn:mpeg:mpeg21:2002:02-DIDL-NS"
xmlns:xsi="http://www.w3.org/2001/XMLSchema-instance"
xsi:schemaLocation="urn:mpeg:mpeg21:2002:02-DIDL-NS DIDLforPA-MAF.xsd ">
    <Container>
        <Item>
            <Component>
                <Resource ref="File:///File1.paf#mage.jpg"/>
            </Component>
            <Component>
                <Resource ref="Image.jpg"/>
            </Component>
        </Item>
    </Container>
</DIDL>
```

© ISO/IEC 2009 – All rights reserved
Copyright International Organization for Standardization
Not for Resale
Provided by IHS under license with ISO
No reproduction or networking permitted without license from IHS

Bibliography

[1] ISO/IEC TR 15938-11:2005, *Information technology — Multimedia content description interface — Part 11: MPEG-7 profile schemas*

[2] Internet Assigned Numbers Authority (IANA), available at http://www.iana.org/protocols/

IANA Matrix for Protocol Parameter Assignment/Registration Procedures

Character Sets

- Character Sets: http://www.iana.org/assignments/character-sets

Multipurpose Internet Mail Extensions (MIME)

- Access Types: http://www.iana.org/assignments/access-types
- Media Type Parameters: http://www.iana.org/assignments/media-types-parameters
- Media Types: http://www.iana.org/assignments/media-types/index.html

[3] IETF RFC 2045, *Multipurpose Internet Mail Extensions (MIME) Part One: Format of Internet Message Bodies, IETF Request for Comments: 2045*, November 1996

[4] IETF RFC 2046, *Multipurpose Internet Mail Extensions (MIME) Part Two: Media Types, IETF Request for Comments: 2046*, November 1996

[5] IETF RFC 2047, *MIME (Multipurpose Internet Mail Extensions) Part Three: Message Header Entensions for Non-ASCII Text, IETF Request for Comments: 2047*, November 1996

[6] IETF RFC 2048, *Multipurpose Internet Mail Extensions (MIME) Part Four: Registration Procedures, IETF Request for Comments: 2048*, November 1996

[7] IETF RFC 2049, *Multipurpose Internet Mail Extensions (MIME) Part Five: Conformance Criteria and Examples, IETF Request for Comments: 2049*, November 1996

[8] IETF RFC 2396, *Uniform Resource Identifiers (URI): Generic Syntax, IETF Request for Comments: 2396*, August 1998

[9] IETF RFC 2616, *Hypertext Transfer Protocol – HTTP/1.1, IETF Request for Comments: 2616*, June 1999

[10] IETF RFC 2978, *IANA Charset Registration Procedures, IETF Request for Comments: 2978*, October 2000

[11] IETF RFC 3003, *The audio/mpeg Media Type, IETF Request for Comments: 3003*, November 2000

[12] IETF RFC 4337, *MIME Type Registration for MPEG-4, IETF Request for Comments: 4337*, March 2006

Copyright International Organization for Standardization
Not for Resale
Provided by IHS under license with ISO
© ISO/IEC 2009 – All rights reserved

No reproduction or networking permitted without license from IHS

Provided by IHS under license with ISO

Copyright International Organization for Standardization
Not for Resale

ICS 35.040

Price based on 116 pages

© ISO/IEC 2009 – All rights reserved
Copyright International Organization for Standardization
Not for Resale

Provided by IHS under license with ISO