INTERNATIONAL STANDARD

ISO/IEC 22536

First edition
2005-07-15

Information technology — Telecommunications and information exchange between systems — Near Field Communication Interface and Protocol (NFCIP-1) — RF interface test methods

Technologies de l'information — Télécommunications et échange d'information entre systèmes — Interface et protocole de communication en champ proche (NFCIP-1) — Méthodes d'essai pour interface RF

Reference number
ISO/IEC 22536:2005(E)

© ISO/IEC 2005

Copyright International Organization for Standardization
Reproduced by IHS under license with ISO
No reproduction or networking permitted without license from IHS

Not for Resale

PDF disclaimer

This PDF file may contain embedded typefaces. In accordance with Adobe's licensing policy, this file may be printed or viewed but shall not be edited unless the typefaces which are embedded are licensed to and installed on the computer performing the editing. In downloading this file, parties accept therein the responsibility of not infringing Adobe's licensing policy. The ISO Central Secretariat accepts no liability in this area.

Adobe is a trademark of Adobe Systems Incorporated.

Details of the software products used to create this PDF file can be found in the General Info relative to the file; the PDF-creation parameters were optimized for printing. Every care has been taken to ensure that the file is suitable for use by ISO member bodies. In the unlikely event that a problem relating to it is found, please inform the Central Secretariat at the address given below.

© ISO/IEC 2005

All rights reserved. Unless otherwise specified, no part of this publication may be reproduced or utilized in any form or by any means, electronic or mechanical, including photocopying and microfilm, without permission in writing from either ISO at the address below or ISO's member body in the country of the requester.

ISO copyright office
Case postale 56 • CH-1211 Geneva 20
Tel. + 41 22 749 01 11
Fax + 41 22 749 09 47
E-mail copyright@iso.org
Web www.iso.org

Published in Switzerland

--`,,```,-`-`,,`,,`,`,,`---

::

Copyright International Organization for Standardization
Reproduced by IHS under license with ISO
No reproduction or networking permitted without license from IHS

© ISO/IEC 2005 – All rights reserved

Not for Resale

Contents

Page

Foreword v

1 Scope 1

2 Conformance 1

3 Normative references 1

4 Conventions and notations 1
4.1 Representation of numbers 1
4.2 Names 2
4.3 Test report 2

5 Abbreviations and acronyms 2

6 Default items applicable to the test methods 3
6.1 Test environment 3
6.2 Default tolerance 3
6.3 Spurious Inductance 3
6.4 Total measurement uncertainty 3

7 Test Set-up and test circuits 3
7.1 Calibration coil 3
7.1.1 Size of the calibration coil 4
7.1.2 Thickness and material of the calibration coil PCB 4
7.1.3 Coil characteristics 4
7.2 Test assembly 5
7.2.1 Field generating antenna 5
7.2.2 Sense coils 5
7.2.3 Arrangement of the test assembly 6
7.3 Reference devices 6
7.3.1 Initiator power 7
7.3.2 Load modulation 7
7.3.3 Dimensions of the reference device 7
7.3.4 Thickness of the reference device PCB 7
7.3.5 Coil characteristics 7
7.4 Digital sampling oscilloscope 8

8 Functional Test – Target 8
8.1 Target RF Level Detection 8
8.1.1 Purpose 8
8.1.2 Test procedure 8
8.1.3 Test report 8
8.2 Target passive Communication mode 9
8.2.1 Purpose 9
8.2.2 Test procedure 9
8.3 Target active Communication mode 10
8.3.1 Purpose 10
8.3.2 Test procedure 10
8.3.3 Test report 10

9 Functional Test – Initiator 11
9.1 Initiator field strength in active and passive Communication mode 11
9.1.1 Purpose 11
9.1.2 Test procedure 11
9.1.3 Test report 11
9.2 Initiator modulation index and waveform in active and passive Communication mode 12

© ISO/IEC 2005 – All rights reserved

Copyright International Organization for Standardization
Reproduced by IHS under license with ISO
No reproduction or networking permitted without license from IHS
Not for Resale

9.2.1 Purpose **12**
9.2.2 Test procedure **12**
9.2.3 Test report **12**
9.2.4 Initiator load modulation reception in passive Communication mode **12**
Annex A (normative) **Field generating antenna** **13**
Annex B (normative) **Sense coil** **16**
Annex C (normative) **Reference device for Initiator power test** **18**
Annex D (normative) **Test report template** **20**
Annex E (informative) **Load modulation test** **23**
Annex F (informative) **Program for evaluation of the spectrum** **25**
Bibliography **30**

© ISO/IEC 2005 – All rights reserved
Copyright International Organization for Standardization
Reproduced by IHS under license with ISO
No reproduction or networking permitted without license from IHS
Not for Resale

Foreword

ISO (the International Organization for Standardization) and IEC (the International Electrotechnical Commission) form the specialized system for worldwide standardization. National bodies that are members of ISO or IEC participate in the development of International Standards through technical committees established by the respective organization to deal with particular fields of technical activity. ISO and IEC technical committees collaborate in fields of mutual interest. Other international organizations, governmental and non-governmental, in liaison with ISO and IEC, also take part in the work. In the field of information technology, ISO and IEC have established a joint technical committee, ISO/IEC JTC 1.

International Standards are drafted in accordance with the rules given in the ISO/IEC Directives, Part 2.

The main task of the joint technical committee is to prepare International Standards. Draft International Standards adopted by the joint technical committee are circulated to national bodies for voting. Publication as an International Standard requires approval by at least 75 % of the national bodies casting a vote.

Attention is drawn to the possibility that some of the elements of this document may be the subject of patent rights. ISO and IEC shall not be held responsible for identifying any or all such patent rights.

ISO/IEC 22536 was prepared by Ecma International (as ECMA-356) and was adopted, under a special “fast-track procedure”, by Joint Technical Committee ISO/IEC JTC 1, *Information technology*, Subcommittee SC 6, *Telecommunications and information exchange between systems*, in parallel with its approval by national bodies of ISO and IEC.

--`,,`,`-`-`,,`,,`,`,,`---
© ISO/IEC 2005 – All rights reserved
Copyright International Organization for Standardization
Reproduced by IHS under license with ISO
No reproduction or networking permitted without license from IHS
Not for Resale

Copyright International Organization for Standardization
Reproduced by IHS under license with ISO
No reproduction or networking permitted without license from IHS
Not for Resale

Information technology — Telecommunications and information exchange between systems — Near Field Communication Interface and Protocol (NFCIP-1) — RF interface test methods

1 Scope

This International Standard is part of a suite of standards that specify tests for ISO/IEC 18092. It defines test methods for the RF-interface. This International Standard specifies RF-test methods for NFC devices with antennas fitting within the rectangular area of 85 mm by 54 mm.

This test standard, the first of two parts, specifies compliance tests for the RF interface of ISO/IEC 18092 devices. The companion test standard specifies protocol tests for ISO/IEC 18092.

Ecma purposefully aligned this International Standard with ISO/IEC 10373-6 to allow testing laboratories to reuse equipment and expertise.

2 Conformance

A system implementing ISO/IEC 18092 is in conformance with this International Standard if it meets all the mandatory requirements specified herein.

3 Normative references

The following referenced documents are indispensable for the application of this document. For dated references, only the edition cited applies. For undated references, the latest edition of the referenced document (including any amendments) applies.

ISO/IEC 18092:2004, *Information technology — Telecommunications and information exchange between systems — Near Field Communication — Interface and Protocol (NFCIP-1)*

4 Conventions and notations

4.1 Representation of numbers

The following conventions and notations apply in this document unless otherwise stated.

— Letters and digits in parentheses represent numbers in hexadecimal notation.

— The value of a bit is denoted by ZERO or ONE.

— Numbers in binary notation and bit patterns are represented by strings of digits 0 and 1 shown with the most significant bit to the left. Within such strings, X may be used to indicate that the value of a bit is not specified within the string.

© ISO/IEC 2005 – All rights reserved

Copyright International Organization for Standardization
Reproduced by IHS under license with ISO
No reproduction or networking permitted without license from IHS
Not for Resale

4.2 Names

The names of basic elements, e.g. specific fields, are written with a capital initial letter.

4.3 Test report

The test report Includes the number of passed tests versus the total number of tests, the number of different samples and the date of the tests, see Annex D.

5 Abbreviations and acronyms

ar	Reference device width
br	Reference device height
ch	Calibration coil height
cw	Calibration coil width
cr	Calibration coil corner radius
dis	Distance between field generating antenna and sense coils
DFT	Discrete Fourier Transformation
DUT	Device under test
fc	Frequency of the operating field
fs	Frequency of subcarrier at 106 kbit/s in passive communication mode
H_{max}	Maximum field strength of the Initiator antenna field
H_{min}	Minimum field strength of the Initiator antenna field
$H_{Threshold}$	Minimum field strength for the RF level detector
$L_{Calcoil}$	Inductance of the calibration coil
$L_{Refcoil}$	Inductance of the reference device
lx	Length of test assembly connection cable
lya	Field generating and sense coil PCB width
lyb	Field generating and sense coil PCB height
lyd	Field generating coil diameter
lyw	Field generating coil track width
NFC	Near Field Communication
nr	Number of turns of reference device
oh	Calibration coil outline height
ow	Calibration coil outline width
PCB	Printed Circuit Board
RF	Radio Frequency
$R_{Calcoil}$	Resistance of the calibration coil
$R_{Refcoil}$	Resistance of the reference device
rs	Sense coil corner radius
sa	Sense coil width

--`,,```,,,,````-`-`,,`,,`,`,,`---
Copyright International Organization for Standardization
Reproduced by IHS under license with ISO
No reproduction or networking permitted without license from IHS
© ISO/IEC 2005 – All rights reserved
Not for Resale

sb	Sense coil height
sr	Reference device track spacing
wr	Reference device track width

6 Default items applicable to the test methods

6.1 Test environment

Unless otherwise specified, testing shall take place in an environment of temperature 23°C ± 3°C (73°F ± 5°F) and of relative humidity 40 % to 60 %.

6.2 Default tolerance

Unless otherwise specified, a tolerance of ± 5 % shall be applied to the values given to specify the characteristics of the test equipment (e.g. linear dimensions) and the test method procedures (e.g. test equipment adjustments).

6.3 Spurious Inductance

Resistors and capacitors shall have negligible inductance.

6.4 Total measurement uncertainty

The measurement uncertainty shall be recorded.

NOTE Basic information is given in “ISO Guide to the Expression of Uncertainty in Measurement“, ISBN 92-67-10188-9, 1993.

7 Test Set-up and test circuits

The test set-up includes:

- Calibration coil
- Test assembly
- Reference devices
- Digital sampling oscilloscope

These are described in the following clauses.

This test set-up applies to NFCIP-1 devices with antennas fitting within the rectangular area of 85 mm by 54 mm.

7.1 Calibration coil

This clause defines the size, thickness and other characteristics of the calibration coil.

© ISO/IEC 2005 – All rights reserved

Copyright International Organization for Standardization
Reproduced by IHS under license with ISO
No reproduction or networking permitted without license from IHS
Not for Resale

7.1.1 Size of the calibration coil

The calibration coil shall be integrated in a PCB that consists of an area, which has the height and width defined in Table 1 containing a single turn coil concentric with the calibration coil outline. Figure 1 illustrates the calibration coil.

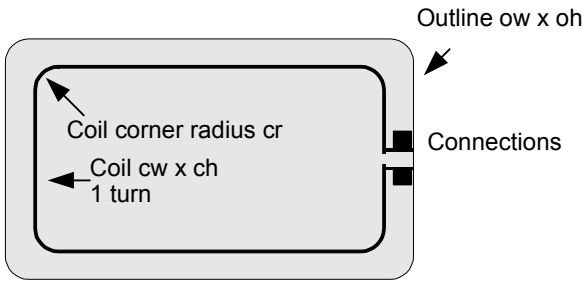

Figure 1 — Calibration coil

7.1.2 Thickness and material of the calibration coil PCB

The thickness of the calibration coil PCB shall be 0,76 mm ±10 %. It shall be constructed of a suitable insulating material.

7.1.3 Coil characteristics

The coil shall have one turn. The outer size of the coil shall have a corner radius cr as defined in Table 1.

The coil is made as a printed coil on a PCB plated with 35 µm copper. Track width shall be 500 µm ± 20 %. The size of the connection pads shall be 1,5 mm by 1,5 mm.

Table 1 — Definition of calibration coil

Name	Symbol	Value
Outline width	ow	85 mm (+/-2 %)
Outline height	oh	54 mm (+/-2 %)
Coil width	cw	72 mm (+/-2 %)
Coil height	ch	42 mm (+/-2 %)
Coil corner radius	cr	5 mm (+/-2 %)

NOTE At 13,56 MHz the approximate inductance $L_{Calcoil}$ is 250 nH and the approximate resistance is $R_{Calcoil}$ 0,4 Ohm.

A high impedance oscilloscope probe (e.g. >1 MOhm, <14 pF) shall be used to measure the (open circuit) voltage in the coil. The resonant frequency of the whole set (calibration coil, connecting leads and probe) shall be above 60 MHz.

The open circuit calibration factor for this coil is 0,32 Volts (rms) per A/m (rms) [Equivalent to 900 mV (peak-to-peak) per A/m (rms)].

NOTE A parasitic capacitance of the probe assembly of less than 35 pF normally ensures a resonant frequency for the whole set of greater than 60 MHz.

© ISO/IEC 2005 – All rights reserved
Copyright International Organization for Standardization
Reproduced by IHS under license with ISO
No reproduction or networking permitted without license from IHS
Not for Resale

NOTE The high impedance oscilloscope probe ground connection should be as short as possible, less than 20 mm or alternatively use a coaxial connection.

7.2 Test assembly

The test assembly for load modulation consists of a field generating antenna and two parallel sense coils: sense coil a and sense coil b. The test assembly set-up is shown in Figure 2. The sense coils are connected such that the signal from one coil is in opposite phase to the other. The potentiometer P1 serves to fine adjust the balance point when the sense coils are not loaded by a Target or any magnetically coupled circuit. The capacitive load of the probe including its parasitic capacitance shall be less than 14 pF.

NOTE The capacitance of the connections and oscilloscope probe should be kept to a minimum for reproducibility.

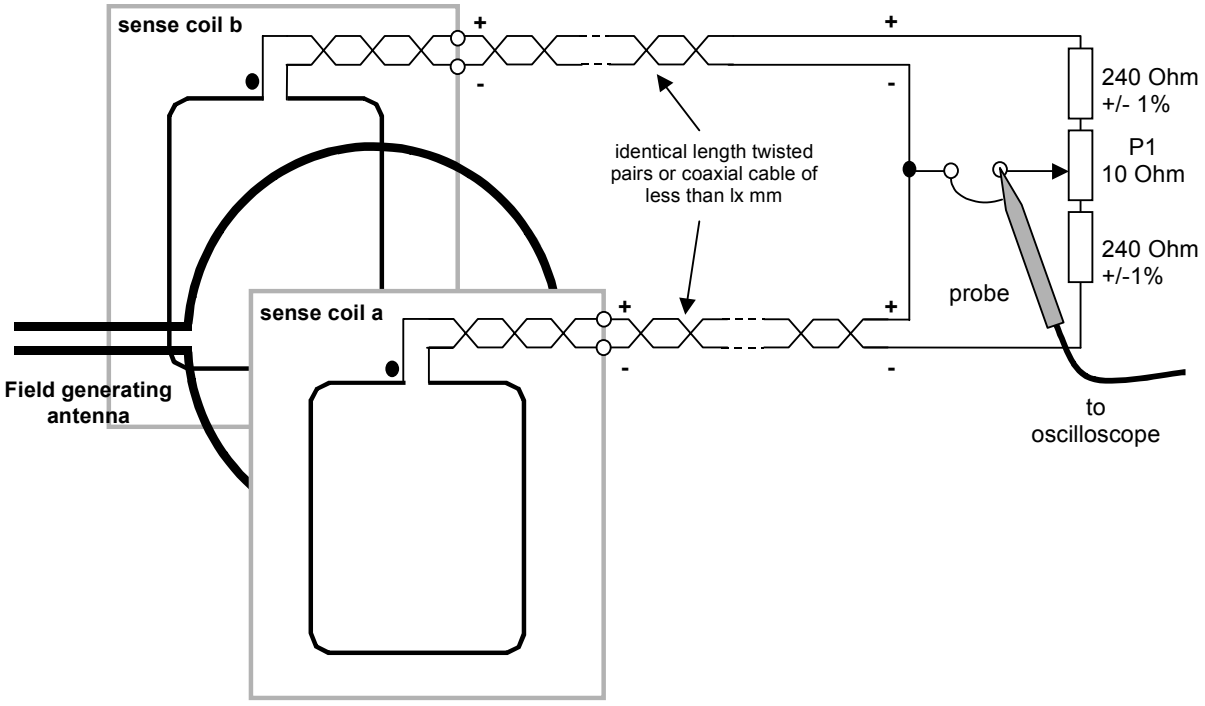

Figure 2 — Test assembly set-up (principle)

NOTE In order to avoid any unintended misalignment in case of an unsymmetrical set-up, the tuning range of the potentiometer P1 is only 10 Ohms. If the set-up cannot be compensated by the potentiometer P1 the symmetry of the set-up should be checked.

NOTE The high impedance oscilloscope probe ground connection should be as short as possible, less than 20 mm or alternatively use a coaxial connection.

7.2.1 Field generating antenna

The field generating antenna shall have a diameter and a construction as specified in Annex A. To match the impedance of the antenna to the antenna output driver a matching circuit as defined in Annex A2 shall be used. The antenna shall be tuned to 50 Ohm by the matching circuit using suitable measurement equipment such as an impedance analyser or a measurement bridge.

7.2.2 Sense coils

The size and the sense coil layout and assembly are specified in Annex B.

© ISO/IEC 2005 – All rights reserved

Copyright International Organization for Standardization
Reproduced by IHS under license with ISO
No reproduction or networking permitted without license from IHS
Not for Resale

7.2.3 Arrangement of the test assembly

The sense coils and field generating antenna are assembled parallel and with the sense and antenna coils coaxial and such that the distance between the active conductors has the value dis in Table 2. The distance between the coil in the DUT and the calibration coil shall be equal with respect to the coil of the field generating antenna. There shall be a 3 mm air space between the DUT and sense coil a in order to avoid parasitic effects such as detuning by closer spacing or ambiguous results due to noise and other environmental effects. The antenna of the DUT shall be placed in parallel to the sense coils.

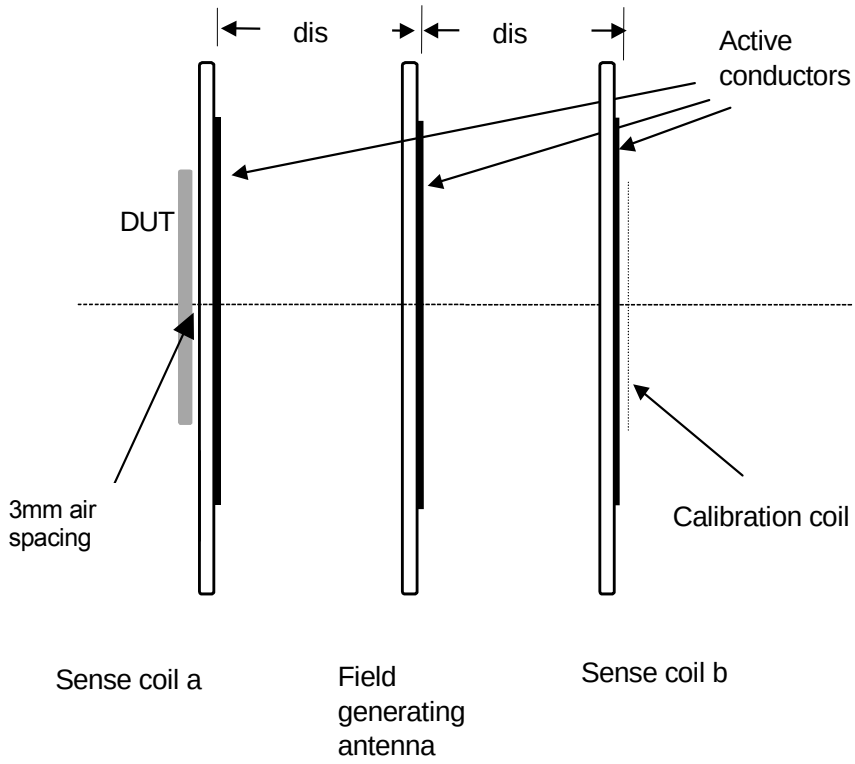

Figure 3 — Test assembly

Table 2 — Definition of test assembly

Name	Symbol	Value
Distance	dis	37,5 mm
Sense coil connection cable length (max.)	lx	100 mm

7.3 Reference devices

Reference devices are used to measure:

— The Initiator power: to verify that the Initiator generates a field with a field strength within the range of H_{min} and H_{max} (under conditions of loading by a Target).

— The load modulation: to verify that the Target exerts at least the minimum load modulation.

© ISO/IEC 2005 – All rights reserved
Copyright International Organization for Standardization
Reproduced by IHS under license with ISO
No reproduction or networking permitted without license from IHS
Not for Resale

7.3.1 Initiator power

The schematic for the Initiator power test is shown in Annex C. Power dissipation can be set by resistor R1 or R2 respectively in order to measure H_{max} and H_{min}. The resonant frequency can be adjusted with C2.

7.3.2 Load modulation

A schematic for the load modulation test is shown in Annex E. This reference device is calibrated by using the test assembly as follows:
The reference device is placed in the position of the DUT. The load modulation signal amplitude is measured as described in 8.2. This amplitude shall be the minimum amplitude at all values of field strength required by ISO/IEC 18092.

7.3.3 Dimensions of the reference device

Figure 4 illustrates a reference device with coil outline dimensions of 85 by 54 mm and a test circuit, which emulates the required Target functions. The schematics of the circuits are described in Annex C and Annex E. These circuits shall be connected to the coil in such a way that it can be inserted into the test assembly without causing interference to the test.

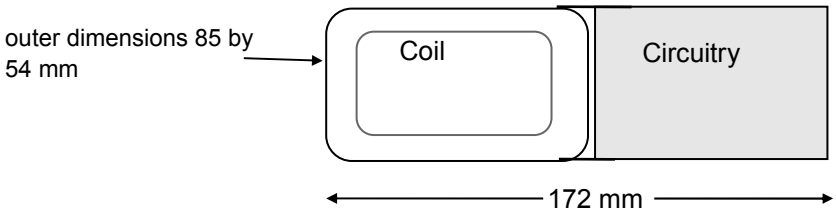

Figure 4 — Reference device

7.3.4 Thickness of the reference device PCB

The thickness of the reference device PCB shall be 0,76 mm ± 10 %.

7.3.5 Coil characteristics

The coil of the reference device shall have nr turns and shall be concentric with the area outline.

The outer size of the coil shall be ar by br.

The coil is printed on PCB plated with 35 µm copper.

The coil width shall be wr and spacing shall be sr.

Table 3 — Reference device for Initiator power test and load modulation test

Name	Symbol	Value
Number of turns	nr	4
Coil outline width	ar	72 mm (± 2 %)
Coil outline height	br	42 mm (± 2 %)
Track width	wr	500 µm (± 20 %)
Track spacing	sr	500 µm (± 20 %)

--`,,`-`-`,,`,,`,`,,`---
© ISO/IEC 2005 – All rights reserved
Copyright International Organization for Standardization
Reproduced by IHS under license with ISO
No reproduction or networking permitted without license from IHS
Not for Resale

NOTE At 13,56 MHz the nominal inductance $L_{Refcoil}$ is 3,5 µH and the nominal resistance $R_{Refcoil}$ is 1 Ohm.

7.4 Digital sampling oscilloscope

The digital sampling oscilloscope shall be capable of sampling at a rate of at least 100 million samples per second with a resolution of at least 8 bits at optimum scaling.

NOTE The oscilloscope should have the capability to output the sampled data as a text file to facilitate mathematical and other operations such as windowing on the sampled data using external software programmes (Annex F).

8 Functional Test – Target

8.1 Target RF Level Detection

8.1.1 Purpose

The purpose of this test is to verify that the NFCIP-1 device detects an external RF field with a fieldstrength in the range of $H_{Threshold}$ up to H_{max}.

8.1.2 Test procedure

The test circuit of Figure 2 and the test assembly of Figure 3 are used.

Step 1:

The RF power delivered by the signal generator to the field generating antenna shall be adjusted to the required field strength in the range of 0 up to H_{max} as measured by the calibration coil without any Target.

The output of the test circuit of Figure 2 is connected to a digital sampling oscilloscope. The potentiometer P1 shall be trimmed to minimise the residual carrier. This signal shall be at least 40 dB lower than the signal obtained by shorting one sense coil so that it can be used to detect if the DUT switches on the RF field.

Step 2:

The NFC device under test shall be placed in the DUT position, concentric with sense coil a. The DUT shall be set into Initiator mode.

The signal generator shall start to generate a non-modulated RF-field at the frequency f_c. The field strength shall be increased linear in the range from 0 up to H_{max}. H_{max} is the maximum field strength without any Target.

The test shall verify if the Initiator correctly switches on its RF-field:

- If the field strength is below $H_{Threshold}$ the Initiator switches on its own RF-field.
- For field strength equal or higher than $H_{Threshold}$ the Initiator does not switch on its own RF- field.

8.1.3 Test report

The test report shall indicate whether the DUT behaves correctly according to the procedure described in 8.1.2.

© ISO/IEC 2005 – All rights reserved
Copyright International Organization for Standardization
Reproduced by IHS under license with ISO
No reproduction or networking permitted without license from IHS
Not for Resale

8.2 Target passive Communication mode

8.2.1 Purpose

The purpose of these tests is to determine the amplitude of the Target's load modulation signal while varying the field strength in the range of H_{min} and H_{max} as defined in the test procedure in 8.2.2.

8.2.2 Test procedure

ISO/IEC 18092 specifies 3 different data rates for the passive communication mode. The test for the Target in the passive communication mode shall be performed at 106 kbit/s, 212 kbit/s and 424 kbit/s.

8.2.2.1 Test procedure for 106 kbit/s

The load modulation test circuit of Figure 2 and the test assembly of Figure 3 are used

Step 1:

The RF power delivered by the signal generator to the field generating antenna shall be adjusted to the required field strength and modulation waveforms as measured by the calibration coil without any Target.

The output of the load modulation test circuit of Figure 2 is connected to a digital sampling oscilloscope. The potentiometer P1 shall be set to minimise the residual carrier. This signal shall be at least 40 dB lower than the signal obtained by shorting one sense coil.

Step 2:

The Target under test shall be placed in the DUT position, concentric with sense coil a. A SENS_REQ command sequence as defined in ISO/IEC 18092 shall be sent to the DUT to obtain a SENS_RES response.

NOTE Care should be taken to apply a proper synchronization method for low amplitude load modulation.

Exactly two subcarrier cycles of the sampled modulation waveform shall be Fourier transformed. A discrete Fourier transformation with a scaling such that a pure sinusoidal signal results in its peak magnitude shall be used. To minimize transient effects, a subcarrier cycle immediately following a non-modulating period must be avoided.

The amplitudes of the upper sideband at *fc+fs* and the lower sideband *fc-fs* and the applied fields and modulations shall be measured in this test.

8.2.2.2 Test report at 106 kbit/s

If the amplitudes of the upper sideband *fc+fs* and the lower sideband *fc-fs* respectively are above the values specified in ISO/IEC 18092 then this test passes.

8.2.2.3 Test procedure for 212 kbit/s and 424 kbit/s

The load modulation test circuit of Figure 2 and the test assembly of Figure 3 are used.

Step 1:

The RF power delivered by the signal generator to the field generating antenna shall be adjusted to the required field strength and modulation waveforms as measured by the calibration coil without any Target.

The output of the load modulation test circuit of Figure 2 is connected to a digital sampling oscilloscope. The potentiometer P1 shall be set to minimise the residual carrier. This signal shall be at least 40 dB lower than the signal obtained by shorting one sense coil.

© ISO/IEC 2005 – All rights reserved

Copyright International Organization for Standardization
Reproduced by IHS under license with ISO
No reproduction or networking permitted without license from IHS
Not for Resale

Step 2:

The Target under test shall be placed in the DUT position, concentric with sense coil a.

A Polling Request command sequence as defined in ISO/IEC 18092 shall be sent to the DUT to obtain a Polling Response. Only the preamble of the Target's response signal is used to perform the DFT.

NOTE Care should be taken to apply a proper synchronization method for low amplitude load modulation.

At least two data cycles of the sampled modulation waveform shall be Fourier transformed. A discrete Fourier transformation with a scaling such that a pure sinusoidal signal results in its peak magnitude shall be used. To minimize transient effects, a modulated data cycle immediately following a non-modulating period must be avoided.

The amplitudes of modulated data shall be measured in this test at different field strengths applied.

8.2.2.4 Test report at 212 kbit/s and 424 kbit/s

If the amplitudes of the modulated data are above the values specified in ISO/IEC 18092 then this test passes.

8.3 Target active Communication mode

8.3.1 Purpose

The purpose of these tests is to determine the amplitude of the Target's RF field and modulation signal while varying the field strength in the range of H_{min} and H_{max} as defined in the test procedure in 8.3.2.

8.3.2 Test procedure

ISO/IEC 18092 specifies 3 different data rates for the active communication mode.

The test for the Target in the active communication mode shall be performed at 106 kbit/s, 212 kbit/s and 424 kbit/s.

The test circuit of Figure 2 and the test assembly of Figure 3 are used.

Step 1:

The RF power delivered by the signal generator to the field generating antenna shall be adjusted to the required field strength and modulation waveforms in active communication mode at the selected data rate as measured by the calibration coil without any Target.

The output of the test assembly of Figure 2 is connected to a digital sampling oscilloscope. The potentiometer P1 shall be set to minimise the residual carrier. This signal shall be at least 40 dB lower than the signal obtained by shorting one sense coil.

Step 2:

The Target under test shall be placed in the DUT position, concentric with sense coil a. The ATR_REQ command sequence shall be sent to the DUT with field strengths H_{min} and H_{max} at all data rates to obtain the ATR_RES.

8.3.3 Test report

If the modulation index of the Target´s RF field, the timing of the RF field generation and the command sequence at all data rates and for H_{min} and H_{max} are according to ISO/IEC 18092 then these tests pass.

© ISO/IEC 2005 – All rights reserved
Copyright International Organization for Standardization
Reproduced by IHS under license with ISO
No reproduction or networking permitted without license from IHS
Not for Resale

9 Functional Test – Initiator

9.1 Initiator field strength in active and passive Communication mode

9.1.1 Purpose

This test measures the field strength produced by an Initiator with its specified antenna in its operating volume as indicated by the manufacturer. The test procedure of 9.1.2 is also used to determine that the Initiator with its specified antenna generates a field not higher than the value H_{max}.

This test uses a reference device as defined in 7.3.1 to determine that a DUT is able to supply a field strength of at least H_{min} to power the reference device placed anywhere within the defined operating volume.

9.1.2 Test procedure

Procedure for H_{max} test:

1. Calibrate the test assembly to produce the H_{max} operating condition on the calibration coil.

2. Tune the Reference device to 19 MHz.

NOTE The resonant frequency of the Reference device is measured by using an impedance analyser or a LCR-meter connected to a calibration coil. The coil of the Reference device should be placed on the calibration coil as close as possible, with the axes of the two coils being congruent. The resonant frequency is obtained when the resistive part of the measured complex impedance is at maximum.

3. Place the Reference device (see Annex C) into the DUT position on the test assembly. Set the jumper to R2 and adjust R2 to obtain V_{DC} = 3 V (dc) measured with a high impedance voltmeter. Verify the operating field condition by measuring the voltage on the calibration coil as specified in 7.3.1.

4. Position the Reference device within the defined operating volume of the DUT. The voltage V_{DC} measured with a high impedance voltmeter across R2 shall not exceed 3 V (dc).

Procedure for H_{min} test:

1. Calibrate the test assembly to produce the H_{min} operating condition on the calibration coil.

2. Tune the Reference device to 13,56 MHz.

3. Place the Reference device (see Annex C) into the DUT position on the test assembly. Set the jumper to R2 and adjust R2 to obtain V_{DC} = 3 V (dc) measured with a high impedance voltmeter. Verify the operating field condition by monitoring the voltage on the calibration coil.

4. Position the Reference device within the defined operating volume of the DUT. The voltage V_{DC} measured with a high impedance voltmeter across R2 shall exceed 3 V (dc).

9.1.3 Test report

The test report shall indicate whether the measured minimum and maximum field strength values are in the range of H_{min} and H_{max} while positioned within the operating volume of the DUT. The test report shall indicate the number of tested positions.

© ISO/IEC 2005 – All rights reserved

Copyright International Organization for Standardization
Reproduced by IHS under license with ISO
No reproduction or networking permitted without license from IHS
Not for Resale

9.2 Initiator modulation index and waveform in active and passive Communication mode

9.2.1 Purpose

This test is used to determine the modulation index of the Initiator field as well as the rise and fall times and the overshoot values as defined in ISO/IEC 18092 within the defined operating volume.

9.2.2 Test procedure

The calibration coil is positioned anywhere within the defined operating volume. The modulation index and waveform characteristics are determined from the induced voltage on the coil displayed on a suitable oscilloscope.

9.2.3 Test report

If the measured modulation index of the Initiator field, the rise and fall times and the overshoot values are according ISO/IEC 18092 within the defined operating volume, then these tests pass.

9.2.4 Initiator load modulation reception in passive Communication mode

Informative, see Annex E.

© ISO/IEC 2005 – All rights reserved
Copyright International Organization for Standardization
Reproduced by IHS under license with ISO
No reproduction or networking permitted without license from IHS
Not for Resale

Annex A
(normative)

Field generating antenna

A.1 Field generating antenna layout including impedance matching circuit

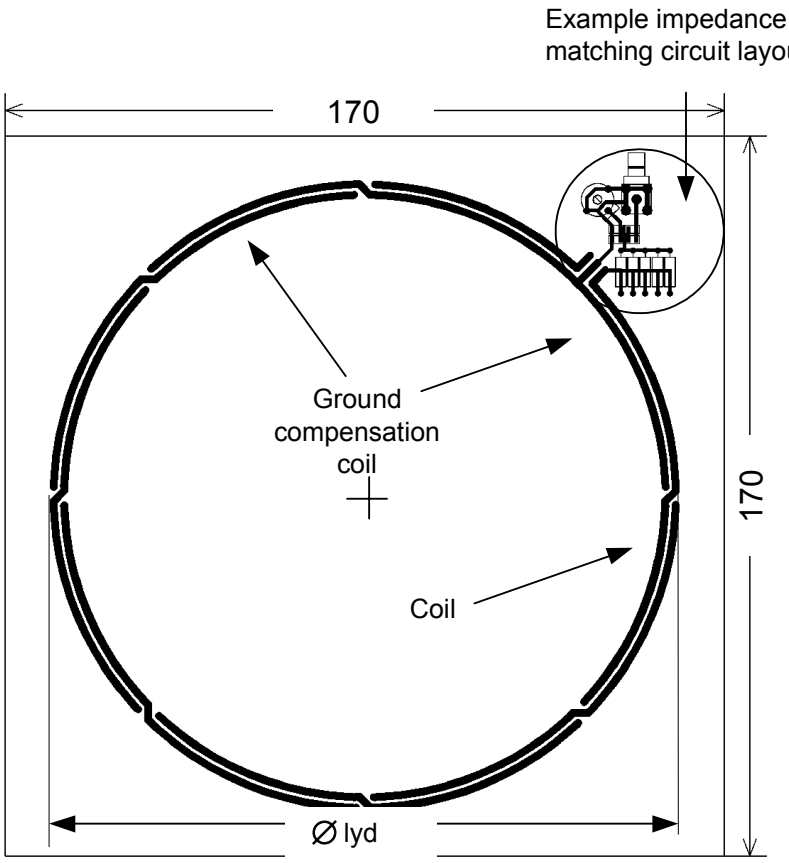

NOTE Drawings are not to scale.

The antenna coil track width is lyw (except for through-plated holes). Starting from the impedance matching circuit there are crossovers every 45°. PCB: FR4 material thickness 1,6 mm, double sided with 35 µm copper.

Figure A.1 — Field generating antenna layout including impedance matching circuit (View from front)

NOTE PCBs and/or finished Testsetups may be made available, for example, by:

RFID Testlab
arsenal research
Faradaygasse
A-1030 Vienna

Phone: +43 (0) 50 550 - 6559
Fax: +43 (0) 50 550 - 6660
Email: mci@arsenal.ac.at
www.arsenal.ac.at/rfid

© ISO/IEC 2005 – All rights reserved

Copyright International Organization for Standardization
Reproduced by IHS under license with ISO
No reproduction or networking permitted without license from IHS
Not for Resale

Table A.1 — Field generating antenna

Name	Symbol	Value
outline width	lya	170 mm
outline height	lyb	170 mm
coil diameter	lyd	150 mm
coil track width	lyw	1.8 mm

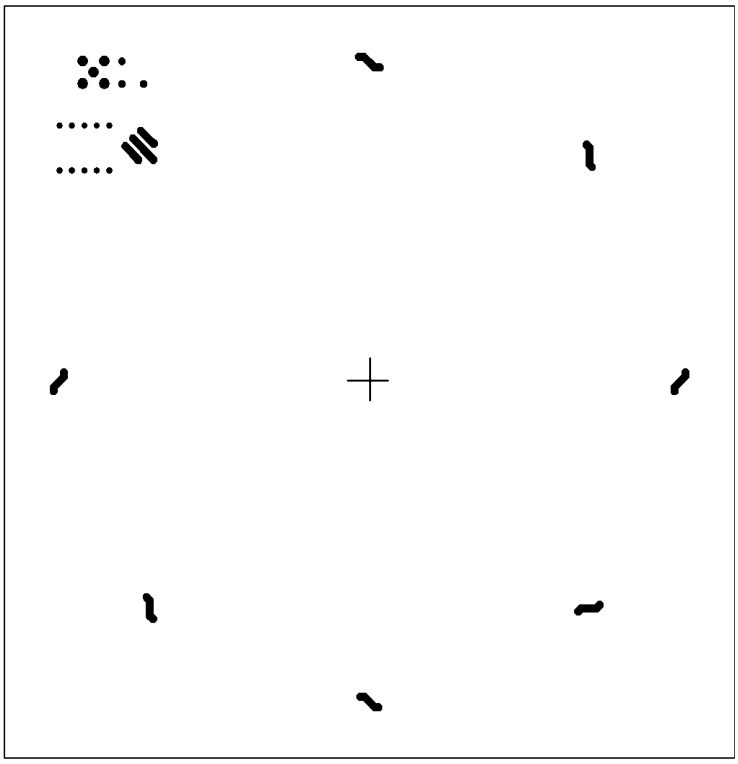

Figure A.2 — Field generating antenna layout (View from back)

© ISO/IEC 2005 – All rights reserved
Copyright International Organization for Standardization
Reproduced by IHS under license with ISO
No reproduction or networking permitted without license from IHS
Not for Resale

A.2 Impedance matching network

The antenna impedance (R_{ant}, L_{ant}) is adapted to the function generator output impedance (Z=50 Ohm) by a matching circuit (see below). The capacitors C1, C2 and C3 have fixed values. The input impedance phase can be adjusted with the variable capacitor C4.

The test assembly as defined in 7.2 and in this Annex is intended to be used for time limited measurements, to avoid any overheating of the individual components. If the test is run continuously, heat dissipation shall be improved.

NOTE If a heat sink is used R_{ext} should be placed on the ground side of the antenna coil.

NOTE The linear low distortion variable output 50 Ohm power driver should be capable of emitting appropriate signal sequences. The modulation index should be adjustable in the ranges of 10 % - 30 % and 95 % - 100 %. The output power driver should be adjustable to deliver H fields as specified in ISO/IEC 18092. Care should be taken with fields above H_{Max}.

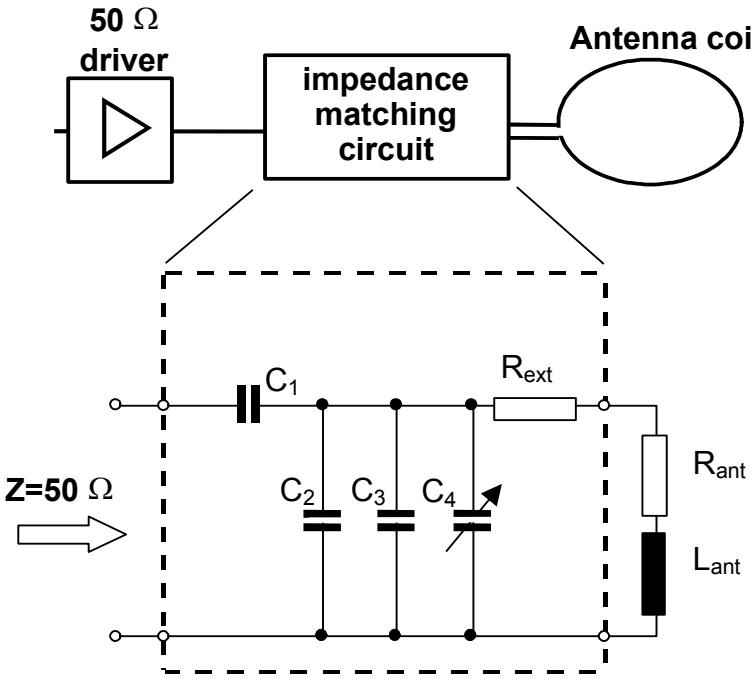

Figure A.3 — Impedance matching circuit

Table A.2 — Impedance matching circuit components

Name	Symbol	Value	Remarks
Serial Matching Capacitor	C1	47 pF	Voltage Range 200V
Parallel Matching Capacitor	C2	180 pF	Voltage Range 200V
Parallel Matching Capacitor	C3	33 pF	Voltage Range 200V
Variable Capacitor	C4	2-27 pF	Voltage Range 200V
External Resistor	R_{ext}	5x4.7 (parallel) Ohm	4 Watts at 7,5 A/m

© ISO/IEC 2005 – All rights reserved
Copyright International Organization for Standardization
Reproduced by IHS under license with ISO
No reproduction or networking permitted without license from IHS
Not for Resale

Annex B
(normative)

Sense coil

B.1 Sense coil layout

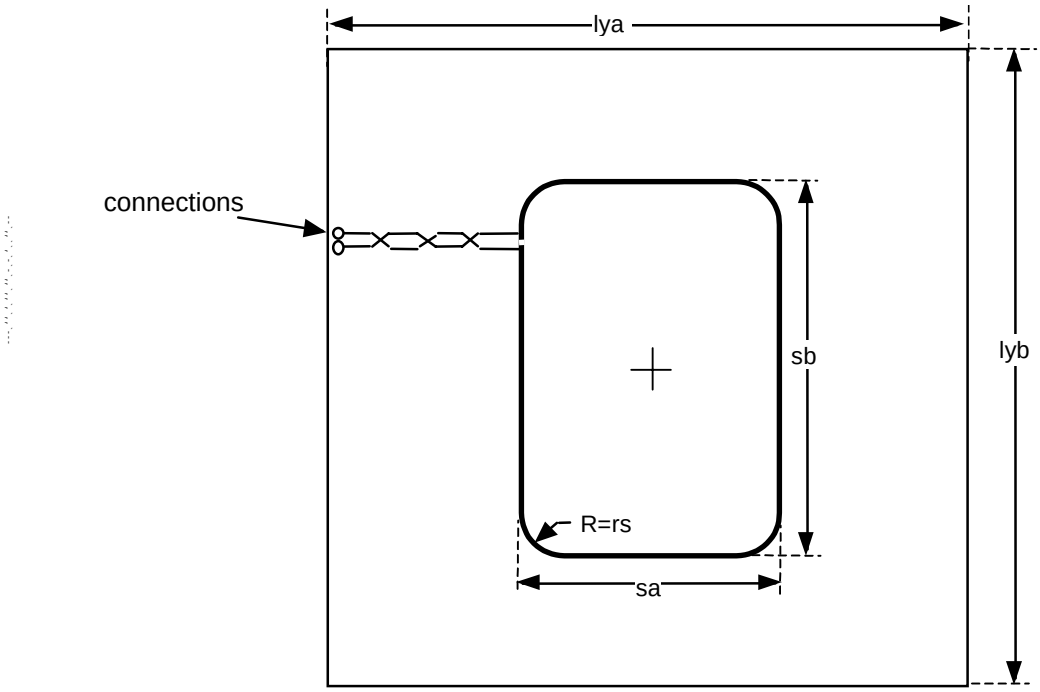

NOTE Drawings are not to scale.

The sense coils width is 0,5 mm with relative tolerance ±20 % (except for through-plated holes). Sizes of the coils refer to the outer dimensions. PCB: FR4 material thickness 1,6 mm, double sided with 35 µm copper.

Figure B.1 — Layout for sense coils a and b

Table B.1 — Sense coil

Name	Symbol	Value
Outline width	lya	170 mm
Outline height	lyb	170 mm
Sense coil width	sa	70 mm
Sense coil height	sb	100 mm
Coil corner Radius	rs	10 mm

© ISO/IEC 2005 – All rights reserved
Copyright International Organization for Standardization
Reproduced by IHS under license with ISO
No reproduction or networking permitted without license from IHS
Not for Resale

B.2 Sense coil assembly

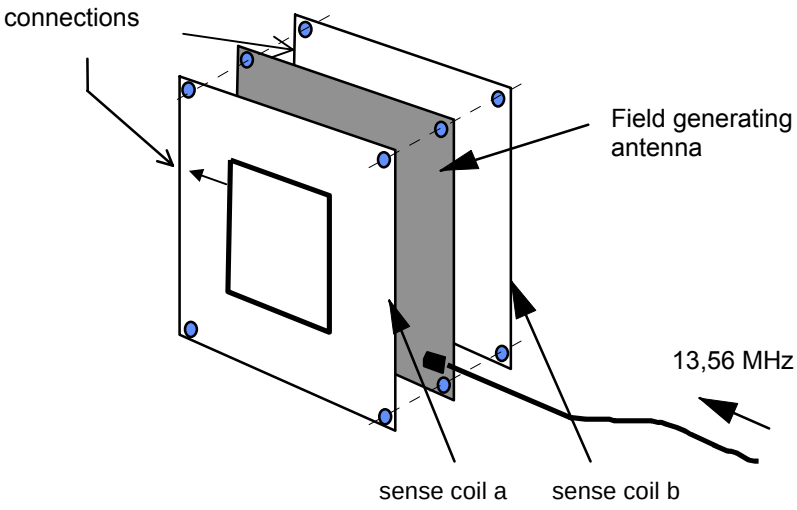

Figure B.2 — Sense coil assembly

© ISO/IEC 2005 – All rights reserved
Copyright International Organization for Standardization
Reproduced by IHS under license with ISO
No reproduction or networking permitted without license from IHS
Not for Resale

Annex C
(normative)

Reference device for Initiator power test

C.1 Circuit diagram for reference device

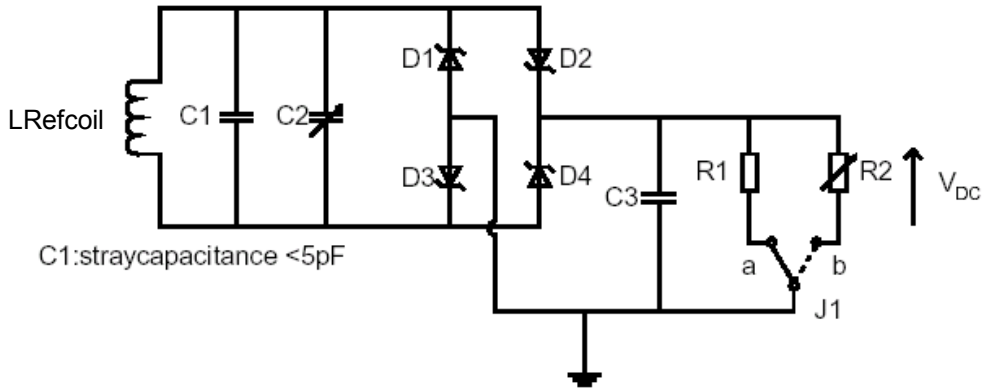

Figure C.1 — Circuit diagram for reference device

NOTE In order to limit the reverse voltage across the bridge rectifier at high field when the jumper J1 is removed or if the value of R1 or of R2 is not low enough to load the voltage at C3 sufficiently, a Zener diode (Value 15 Volts) should be added in parallel to C3.

Table C.1 — Components list

Symbol	Value
LRefcoil	see 7.3.5.
C1	Stray capacitance < 5 pF
C2	6…60 pF
C3	10 nF
D1, D2, D3, D4	see characteristics in Table D.1 (BAR 43 or
R1	1,8 kOhm (5 mW)
R2	0-1 kOhm

© ISO/IEC 2005 – All rights reserved
Copyright International Organization for Standardization
Reproduced by IHS under license with ISO
No reproduction or networking permitted without license from IHS
Not for Resale

Table C.2 — Specification of basic characteristics of D1, D2, D3, D4

Symbol	Test Condition at Tj=25 °C	Typ.	Max.	Unit
V_F	I_F=2 mA		0,33	V
C	V_R=1V, f=1 MHz	7		pF
t_{rr}	I_F=10 mA, I_R=10 mA, I_{rr}=1 mA		5	ns

V_F Forward voltage drop
V_R Reverse voltage
I_F Forward current
I_R Reverse current
t_{rr} Reverse recovery time
I_{rr} Reverse recovery current
Tj Junction temperature
f Frequency
C Junction capacitance

--`,,```,,,,````-`-`,,`,,`,`,,`---

© ISO/IEC 2005 – All rights reserved
Copyright International Organization for Standardization
Reproduced by IHS under license with ISO
No reproduction or networking permitted without license from IHS
Not for Resale

Annex D
(normative)

Test report template

Supplier:

Product:

Legend:

passed tests = number tests that have been successfully performed

tests = total number of performed tests

samples = number of different DUTs

of tested positions = number of different positions in the operating volume

No	**Testname**		**Purpose**			
8.1	Target RF Level Detection		The purpose of this test is to verify that the NFCIP-1 device detects an external RF field with a field strength in the range of $H_{Threshold}$ up to H_{max}.			
	Condition	**Expected Result according ISO/IEC 18092**	**# passed tests**	**# tests**	**# samples**	**Date**
	$H < H_{Threshold}$	DUT switch its RF field on				
	$H_{Threshold} = < H < H_{max}$	DUT does not switch its RF field on				

No	**Testname**		**Purpose**			
	Target passive Communication mode		The purpose of these tests is to determine the amplitude of the Target's load modulation signal while varying the field strength in the range of H_{min} and H_{max}.			
	Condition	**Expected Result according ISO/IEC 18092**	**# passed tests**	**# tests**	**# samples**	**Date**
		If the resulting amplitudes of the upper sideband fc+fs are above the values specified in ISO/IEC 18092 then this test passes.				

© ISO/IEC 2005 – All rights reserved
Copyright International Organization for Standardization
Reproduced by IHS under license with ISO
No reproduction or networking permitted without license from IHS
Not for Resale

8.2	106 kbit/s	If the resulting amplitudes of the lower sideband fc-fs respectively are above the values specified in ISO/IEC 18092 then this test passes.				
	212 kbit/s	If the amplitudes of the modulated data are above the values specified in ISO/IEC 18092 then this test passes.				
	424 kbit/s	If the amplitudes of the modulated data are above the values specified in ISO/IEC 18092 then this test passes.				

No	**Testname**		**Purpose**			
8.3	Target Active communication mode		The purpose of these tests is to determine the amplitude of the Target's RF field and modulation signal while varying the field strength in the range of H_{min} and H_{max}.			
	Condition	**Expected Result according ISO/IEC 18092**	**# passed tests**	**# tests**	**# samples**	**Date**
	H_{min} 106 kbit/s	Modulation index				
		Timing of the RF field generation				
		Command sequence				
	H_{max} 106 kbit/s	Modulation index				
		Timing of the RF field generation				
		Command sequence				
	H_{min} 212 kbit/s	Modulation index				
		Timing of the RF field generation				
		Command sequence				
	H_{max} 212 kbit/s	Modulation index				
		Timing of the RF field generation				
		Command sequence				
	H_{min} 424 kbit/s	Modulation index				
		Timing of the RF field generation				
		Command sequence				
		Modulation index				

© ISO/IEC 2005 All rights reserved

Copyright International Organization for Standardization
Reproduced by IHS under license with ISO
No reproduction or networking permitted without license from IHS
Not for Resale

	H_{max} 424 kbit/s	Timing of the RF field generation				
		Command sequence				
No	**Testname**		**Purpose**			
9.1	Initiator field strength and power transfer in active and passive Communication mode.		This test measures the field strength produced by an Initiator with its specified antenna in its operating volume as indicated by the manufacturer.			
	Condition	**Expected Result according ISO/IEC 18092**	**# passed tests**	**# tests & # of tested positions**	**# samples**	**Date**
	Different positions in the operating volume	$H_{min} < H < H_{max}$				
No	**Testname**		**Purpose**			
9.2	Initiator modulation index and waveform in active and passive Communication mode.		This test is used to determine the modulation index of the Initiator field as well as the rise and fall times and the overshoot values as defined in ISO/IEC 18092 within the defined operating volume.			
	Condition	**Expected Result according ISO/IEC 18092**	**# passed tests**	**# tests & # of tested positions**	**# samples**	**Date**
	Different positions in the operating volume	Modulation index				
		Rise times				
		Fall times				
		Overshoot values				

© ISO/IEC 2005 – All rights reserved
Copyright International Organization for Standardization
Reproduced by IHS under license with ISO
No reproduction or networking permitted without license from IHS
Not for Resale

Annex E
(informative)

Load modulation test

E.1 Load modulation test

This test may be used to verify that an Initiator correctly detects the load modulation of a Target. It is supposed that the Initiator has means to indicate correct reception of the load modulation signal produced by a reference device.

The following clause describes a reference device and calibration procedure, which allows the sensitivity of an Initiator to load modulation to be assessed. This Reference device does not emulate the shunt action of all types of Targets, therefore it should be calibrated at a given field strength H in the Test Initiator assembly. The reference device should be placed in the Initiators field at a position where the field has the same value of the field strength *H*. The measurement of C3 (dc) voltage should be the same for both Reference device calibration and Initiator load modulation test.

E.2 Reference device for load modulation test

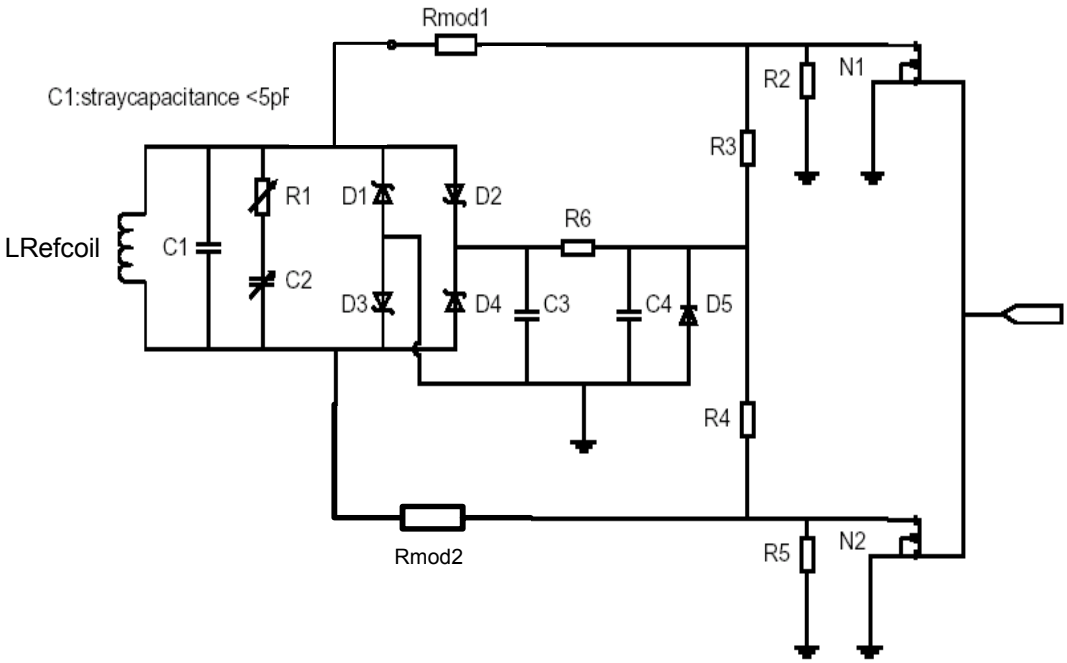

Figure E.1 — Circuit diagram for Reference device for load modulation test

© ISO/IEC 2005 All rights reserved
Copyright International Organization for Standardization
Reproduced by IHS under license with ISO
No reproduction or networking permitted without license from IHS
Not for Resale

Adjust following components for required emulation:

Table E.1 — Adjustable components

Component	Function	Value
R1	adjust Q	0-10 Ohm
C2	adjust resonant frequency	as required
Rmod1, Rmod2	resistive modulation	between 400 Ohm and 12 kOhm
R6	shunt current	between 10 Ohm and 5 kOhm
D5	shunt voltage	between 2,7 V and 15 V

Table E.2 — Components list

Component	Value
R2, R3, R4, R5	1 Mohm
D1, D2, D3, D4	as defined in Annex C, Table C.2
LRefcoil	see 7.3.5
C1	Stray capacitance $<$ 5 pF
C2	6-60 pF
C3	100 pF
C4	10 nF
N1, N2	N-Mos transistor, 10 pF max output capacitance to ground

© ISO/IEC 2005 – All rights reserved
Copyright International Organization for Standardization
Reproduced by IHS under license with ISO
No reproduction or networking permitted without license from IHS
Not for Resale

Annex F
(informative)

Program for evaluation of the spectrum

The following program written in C language gives an example for the calculation of the magnitude of the spectrum from the Target in passive communication mode at 106 kbit/s.

NOTE This program needs to be adapted for other communication modes. Commercially available software might also be used to perform the discrete Fourier transformation (DFT).

```
/*************************************************************/
/***  This program calculates the fourier coefficients       ***/
/***  of load modulated voltage of a target                  ***/
/***  The coefficient are calculated for the frequency       ***/
/***    Carrier:            13.5600 MHz                      ***/
/***    Upper sideband:     14.4075 MHz                      ***/
/***    Lower sideband:     12.7125 MHz                      ***/
/*************************************************************/
/*** Input:                                                  ***/
/***  File in CSV Format containing a table of two           ***/
/***  columns (time and differential voltage vd)             ***/
/***                                                         ***/
/***  data format of input-file:                             ***/
/***  -------------------------                              ***/
/***  - one data-point per line:                             ***/
/***     {time[seconds], sense-coil-voltage[volts])          ***/
/***  - contents in ASCII, no headers                        ***/
/***  - data-points shall be equidistant time                ***/
/***  - minimum sampling rate: 100 MSamples/second           ***/
/***  - modulation waveform centred                          ***/
/***      (max. tolerance: half of subcarrier cycle)         ***/
/***                                                         ***/
/***    "screen-shot of centred modulation-waveform          ***/
/***     with 4 subcarrier cycles":                          ***/
/***                                                         ***/
/***   XXXXXXXXXX    xxxx    xxxx    xxxx    xxxxXXXXXXXXXX  ***/
/***   XXXXXXXXXX    xxxx    xxxx    xxxx    xxxxXXXXXXXXXX  ***/
/***   XXXXXXXXXXxxxxxxxxxxxxxxxxxxxxxxxxxxxxxxXXXXXXXXXX  ***/
/***   XXXXXXXXXXxxxxxxxxxxxxxxxxxxxxxxxxxxxxxxXXXXXXXXXX  ***/
/***   XXXXXXXXXXxxxxxxxxxxxxxxxxxxxxxxxxxxxxxxXXXXXXXXXX  ***/
/***   XXXXXXXXXXxxxxxxxxxxxxxxxxxxxxxxxxxxxxxxXXXXXXXXXX  ***/
/***   XXXXXXXXXX    xxxx    xxxx    xxxx    xxxxXXXXXXXXXX  ***/
/***   XXXXXXXXXX    xxxx    xxxx    xxxx    xxxxXXXXXXXXXX  ***/
/***   |-----------------------cc-----------------------|    ***/
/***  example for spreadsheet file (start in next line):     ***/
/***   (time)      (voltage)                                 ***/
/***  3.00000e-06 , 1.00                                     ***/
/***  3.00200e-06 , 1.01                                     ***/
/***  .....                                                  ***/
/*************************************************************/
/*** RUN: Modtst  [filename1[.csv] ... filename[.csv] ]      ***/
/*************************************************************/
#include <stdio.h>
#include <conio.h>
#include <string.h>
#include <math.h>
```

© ISO/IEC 2005 – All rights reserved

Copyright International Organization for Standardization
Reproduced by IHS under license with ISO
No reproduction or networking permitted without license from IHS
Not for Resale

```
#define MAX_SAMPLES 5000

float  pi;   /* pi=3.14.... */

/* Array for time and sense coil voltage vd*/
float vtime[MAX_SAMPLES]; /* time array  */
float vd[MAX_SAMPLES];    /* Array for different coil voltage */

/*************************************************************/
/***    Read CSV File  Function                            ***/
/***                                                       ***/
/***    Description:                                       ***/
/***    This function reads the table of time and sense coil ***/
/***    voltage from a File in CSV Format                  ***/
/***                                                       ***/
/***    Input: filename                                    ***/
/***                                                       ***/
/***    Return: Number of samples  (sample Count)          ***/
/***            0  if an error occurred                    ***/
/***                                                       ***/
/***    Displays Statistics:                               ***/
/***                                                       ***/
/***    Filename, SampleCount, Sample rate, Max/Min Voltage  ***/
/*************************************************************/
int readcsv(char* fname)
{
   float a,b;
   float max_vd,min_vd;
   int i;
   FILE     *sample_file;

   /************ Open File **********************************/
   if (!strchr(fname, '.'))   strcat(fname, ".csv");

   if ((sample_file = fopen(fname, "r")) == NULL)
      {
      printf("Cannot open input file %s.\n",fname);
      return 0;
      }
   /*************************************************************/
   /* Read CSV File                                             */
   /*************************************************************/
   max_vd=-1e-9F;
   min_vd=-max_vd;
   i=0;

   while (!feof(sample_file))
      {
      if (i>=MAX_SAMPLES)
      {
          printf("Warning: File truncated !!!\n");
          printf("To much samples in file %s\b\n",fname);
          break;
      }
      fscanf(sample_file,"%f,%f\n", &a, &b);
      vtime[i] = a;
      vd[i] = b;
      if (vd[i]>max_vd) max_vd=vd[i];
      if (vd[i]<min_vd) min_vd=vd[i];
      i++;
      }
```


© ISO/IEC 2005 – All rights reserved
Copyright International Organization for Standardization
Reproduced by IHS under license with ISO
No reproduction or networking permitted without license from IHS
Not for Resale

```
    fclose(sample_file);

    /************ Displays Statistics  ************************/
    printf("\n*************************************************\n");
    printf("\nStatistics: \n");
    printf(" Filename    : %s\n",fname);
    printf(" Sample count: %d\n",i);
    printf(" Sample rate : %1.0f MHz\n",1e-6/(vtime[1]-vtime[0]));
    printf(" Max(vd)     : %4.0f mV\n",max_vd*1000);
    printf(" Min(vd)     : %4.0f mV\n",min_vd*1000);

    return i;
}/*************** End ReadCsv **************/


/*************************************************************/
/***    DFT: Discrete Fourier Transform                    ***/
/*************************************************************/
/***    Description:                                       ***/
/***    This function calculate the Fourier coefficient    ***/
/***                                                       ***/
/***    Input: Number of samples                           ***/
/***    Global Variables:                                  ***/
/***                                                       ***/
/***    Displays Results:                                  ***/
/***                                                       ***/
/***     Carrier coefficient                               ***/
/***     Upper sideband coefficient                        ***/
/***     Lower sideband coefficient                        ***/
/***                                                       ***/
/*************************************************************/

void dft(int count)
{
    float c0_real,c0_imag,c0_abs,c0_phase;
    float c1_real,c1_imag,c1_abs,c1_phase;
    float c2_real,c2_imag,c2_abs,c2_phase;
    int   N_data,center,start,end;
    float w0,wu,wl;

    int i;

    w0=(float)(13.56e6*2.0)*pi;  /* carrier        13.56 MHz */
    wu=(float)(1.0+1.0/16)*w0; /* upper sideband 14.41 MHz */
    wl=(float)(1.0-1.0/16)*w0; /* lower sideband 12.71 MHz */

    c0_real=0;  /* real part of the carrier fourier coefficient */
    c0_imag=0;  /* imag part of the carrier fourier coefficient */
    c1_real=0;  /* real part of the up. sideband fourier  coefficient */
    c1_imag=0;  /* imag part of the up. sideband fourier coefficient */
    c2_real=0;  /* real part of the lo. sideband fourier coefficient */
    c2_imag=0;  /* imag part of the lo. sideband fourier coefficient */

    center=(count+1)/2; /*  center address */

    /********** signal selection  ****************************/

    /*   Number of samples for two subcarrier periods  */

    N_data=(int)(0.5+16.0F/(vtime[2]-vtime[1])/13.56e6F);
           /* Note: (vtime[2]-vtime[1]) are the scope sample rate */
```

© ISO/IEC 2005 – All rights reserved

Copyright International Organization for Standardization
Reproduced by IHS under license with ISO
No reproduction or networking permitted without license from IHS
Not for Resale

```
   start=center-N_data;
   end=start+N_data-1;

   /******************    DFT ******************************/
   for( i=start;i<=end;i++)
      {
      c0_real=c0_real+vd[i]*(float)cos(w0*vtime[i]);
      c0_imag=c0_imag+vd[i]*(float)sin(w0*vtime[i]);
      c1_real=c1_real+vd[i]*(float)cos(wu*vtime[i]);
      c1_imag=c1_imag+vd[i]*(float)sin(wu*vtime[i]);
      c2_real=c2_real+vd[i]*(float)cos(wl*vtime[i]);
      c2_imag=c2_imag+vd[i]*(float)sin(wl*vtime[i]);
      }

   /******************    DFT scale ************************/
   c0_real=2.0F*c0_real/(float)(2*N_data);
   c0_imag=2.0F*c0_imag/(float)(2*N_data);
   c1_real=2.0F*c1_real/(float)(2*N_data);
   c1_imag=2.0F*c1_imag/(float)(2*N_data);
   c2_real=2.0F*c2_real/(float)(2*N_data);
   c2_imag=2.0F*c2_imag/(float)(2*N_data);

   /*************** absolute fourier coefficient     **********/
   c0_abs=(float)sqrt(c0_real*c0_real + c0_imag*c0_imag);
   c1_abs=(float)sqrt(c1_real*c1_real + c1_imag*c1_imag);
   c2_abs=(float)sqrt(c2_real*c2_real+c2_imag*c2_imag);

   /**************    Phase of fourier coefficient    **********/
   c0_phase=(float)atan2(c0_imag,c0_real);
   c1_phase=(float)atan2(c1_imag,c1_real);
   c2_phase=(float)atan2(c2_imag,c2_real);

   /**************  Result Display    ************************/
   printf("\n\nResults: \n");

   printf("Carrier        ");
   printf("Abs: %7.3fmV  ",1000*c0_abs);
   printf("Phase: %3.0fdeg\n",c0_phase/pi*180);

   printf("Upper sideband ");
   printf("Abs: %7.3fmV  ",1000*c1_abs);
   printf("Phase: %3.0fdeg\n",c1_phase/pi*180);

   printf("Lower sideband ");
   printf("Abs: %7.3fmV  ",1000*c2_abs);
   printf("Phase: %3.0fdeg\n\n",c2_phase/pi*180);
   printf("\n*********************************************\n");
   return;
}/*************** End DFT **************/


/*************************************************************/
/***    MAIN  Program                                      ***/
/*************************************************************/
int main(unsigned short paramCount,char *paramList[])
{
   char fname[256];
   unsigned int  i,sample_count;
   pi = (float)atan(1)*4; /* calculate pi */
```


© ISO/IEC 2005 – All rights reserved
Copyright International Organization for Standardization
Reproduced by IHS under license with ISO
No reproduction or networking permitted without license from IHS
Not for Resale

```
   printf("\n*********************************************\n");
   printf("\n****  target Test-Program                    ****\n");
   printf("\n****  Version: 1.0     March 2004          ****\n");
   printf("\n*********************************************\n");

   /************* No Input Parameter           ****************/
   if (paramCount==1)
      {
      printf("\nCSV File name :");
      scanf("%s",fname);
      if (!strchr(fname, '.'))   strcat(fname, ".csv");
      if (!(sample_count=readcsv(fname))) return;

      dft(sample_count);
      }
   else
      {
      /************* Input Parameter Loop     ****************/
      for (i=1;i<paramCount;i++)
         {
         strcpy(fname,paramList[i]);

         if (!strchr(fname, '.'))   strcat(fname, ".csv");
         if (!(sample_count=readcsv(fname))) break;
         dft(sample_count);
         }
      }
   return;
}/********************** End Main  ***************************/
```

Copyright International Organization for Standardization © ISO/IEC 2005 All rights reserved
Reproduced by IHS under license with ISO
No reproduction or networking permitted without license from IHS
Not for Resale

Bibliography

[1] ISO/IEC 10373-6:2001, *Identification cards — Test methods — Part 6: Proximity cards*

[2] ISBN 92-67-10188-9, *ISO Guide to the Expression of Uncertainty in Measurement (1993)*

© ISO/IEC 2005 – All rights reserved

Copyright International Organization for Standardization
Reproduced by IHS under license with ISO
No reproduction or networking permitted without license from IHS

Not for Resale

--`,,``,`-`-`,,`,,`,`,,`---

Copyright International Organization for Standardization
Reproduced by IHS under license with ISO
No reproduction or networking permitted without license from IHS

Not for Resale

ICS 35.100.01

Price based on 30 pages

--`,,``,`-`-`,,`,,`,`,,`---

© ISO/IEC 2005 – All rights reserved

Copyright International Organization for Standardization
Reproduced by IHS under license with ISO
No reproduction or networking permitted without license from IHS

Not for Resale