INTERNATIONAL STANDARD

ISO/IEC 22533

First edition
2005-07-01

Information technology — Data interchange on 90 mm optical disk cartridges — Capacity: 2,3 Gbytes per cartridge

Technologies de l'information — Échange de données sur cartouches de disque optique de 90 mm — Capacité: 2,3 Go par cartouche

Reference number
ISO/IEC 22533:2005(E)

© ISO/IEC 2005

Copyright International Organization for Standardization
Reproduced by IHS under license with ISO
No reproduction or networking permitted without license from IHS

Not for Resale

PDF disclaimer

This PDF file may contain embedded typefaces. In accordance with Adobe's licensing policy, this file may be printed or viewed but shall not be edited unless the typefaces which are embedded are licensed to and installed on the computer performing the editing. In downloading this file, parties accept therein the responsibility of not infringing Adobe's licensing policy. The ISO Central Secretariat accepts no liability in this area.

Adobe is a trademark of Adobe Systems Incorporated.

Details of the software products used to create this PDF file can be found in the General Info relative to the file; the PDF-creation parameters were optimized for printing. Every care has been taken to ensure that the file is suitable for use by ISO member bodies. In the unlikely event that a problem relating to it is found, please inform the Central Secretariat at the address given below.

© ISO/IEC 2005

All rights reserved. Unless otherwise specified, no part of this publication may be reproduced or utilized in any form or by any means, electronic or mechanical, including photocopying and microfilm, without permission in writing from either ISO at the address below or ISO's member body in the country of the requester.

ISO copyright office
Case postale 56 • CH-1211 Geneva 20
Tel. + 41 22 749 01 11
Fax + 41 22 749 09 47
E-mail copyright@iso.org
Web www.iso.org

Published in Switzerland

Copyright International Organization for Standardization
Reproduced by IHS under license with ISO
No reproduction or networking permitted without license from IHS

© ISO/IEC 2005 – All rights reserved

Not for Resale

Contents

Page

Foreword ... vii

Section 1 - General ... 1

1 Scope ... 1

2 Conformance ... 1
2.1 Optical disk Cartridge (ODC) ... 1
2.2 Generating system ... 1
2.3 Receiving system ... 2
2.4 Compatibility statement ... 2

3 Normative references ... 2

4 Terms and definitions ... 2

5 Conventions and notations ... 5
5.1 Representation of numbers ... 5
5.2 Names ... 5

6 Abbreviations and acronyms ... 5

7 General description of the optical disk cartridge ... 6

8 General requirements ... 6
8.1 Environments ... 6
8.2 Temperature shock ... 8
8.3 Safety requirements ... 8
8.4 Flammability ... 8

9 Reference Drive ... 8
9.1 Optical system ... 8
9.2 Optical beam ... 9
9.3 Read channels ... 10
9.4 Tracking ... 10
9.5 Rotation of the disk ... 10

Section 2 - Mechanical and physical characteristics ... 11

10 Dimensional and physical characteristics of the case ... 11
10.1 General description of the case (see Figure 2) ... 11
10.2 Reference planes of the case ... 11
10.3 Dimensions of the case ... 11
10.4 Mechanical characteristics ... 18

11 Dimensional, mechanical and physical characteristics of the disk ... 31
11.1 General description of the disk ... 31
11.2 Reference axis and plane of the disk ... 31
11.3 Dimensions of the disk (see Figure 13) ... 31
11.4 Mechanical characteristics ... 32
11.5 Optical Characteristics ... 34

12 Interface between cartridge and drive ... 36
12.1 Clamping method ... 36
12.2 Clamping force ... 36
12.3 Capture cylinder (see Figure 14) ... 36
12.4 Disk position in operating condition (see Figure 14) ... 36

© ISO/IEC 2005 All rights reserved

Copyright International Organization for Standardization
Reproduced by IHS under license with ISO
No reproduction or networking permitted without license from IHS
Not for Resale

Section 3 - Format of information 38

13 Geometry of physical tracks 38
13.1 Physical track shape 38
13.2 Direction of track spiral 39
13.3 Physical track pitch 39

14 Track format 39
14.1 Logical Track number 39
14.2 Logical Track layout 39
14.3 Clock frequencies and periods 40
14.4 Radial alignment 40
14.5 Sector number 41

15 Sector format 41
15.1 Sector layout 41
15.2 Sector Mark (SM) 42
15.3 VFO fields 42
15.4 Address Mark (AM) 43
15.5 ID fields 43
15.6 Postambles (PA) 44
15.7 Gap 45
15.8 Sync 45
15.9 Data field 45
15.10 VCO lock pattern field (VLP) 46
15.11 Buffer field 46

16 Recording code 46

17 Format of the Information Zone 47
17.1 General description of the Information Zone 47
17.2 Division of the Information Zone 47

18 Format of the Data Zone 51
18.1 Buffer tracks and Test tracks in the Data Zone 51
18.2 Defect Management Areas (DMAs) 51
18.3 Disk Definition Structure (DDS) 55
18.4 Partitioning 55
18.5 Logical block address 55

19 Defect management 57
19.1 Initialization of the disk 57
19.2 Certification 57
19.3 Disks not certified 58
19.4 Write procedure 58
19.5 Primary Defect List (PDL) 58
19.6 Secondary Defect List (SDL) 59

Section 4 - Characteristics of embossed information 60

20 Method of testing 60
20.1 Environment 60
20.2 Use of the Reference Drive 60
20.3 Definition of signals 61

21 Signals from grooves 62
21.1 Divided push-pull signal 62
21.2 Phase depth 63
21.3 Track location 63

22 Signals from Headers 63
22.1 Sector Mark 64
22.2 VFO1 and VFO2 64
22.3 Address Mark, ID field and Postamble 64
22.4 Timing jitter 64

© ISO/IEC 2005 – All rights reserved
Copyright International Organization for Standardization
Reproduced by IHS under license with ISO
No reproduction or networking permitted without license from IHS
Not for Resale

22.5 Asymmetry **65**

23 Signals from embossed Recording fields **65**
23.1 Signal amplitude **65**
23.2 Timing jitter **65**

Section 5 - Characteristics of the recording layer and user data **66**

24 Method of testing **66**
24.1 Environment **66**
24.2 Reference Drive **66**
24.3 Write conditions **67**
24.4 Erase conditions **69**
24.5 Definition of signals **70**

25 Magneto-optical characteristics **70**
25.1 Figure of merit **70**
25.2 Imbalance of the magneto-optical signal **70**

26 Write characteristics **71**
26.1 Resolution **71**
26.2 Narrow-band signal-to-noise ratio (NBSNR) **72**
26.3 Cross-talk ratio **73**
26.4 Timing jitter **73**
26.5 Media thermal interaction **73**

27 Erase power determination **74**

Section 6 - Characteristics of user data **75**

28 Method of testing **75**
28.1 Environment **75**
28.2 Reference Drive **75**

29 Minimum quality of a sector **76**
29.1 Headers **76**
29.2 User-written data **77**

30 Data interchange requirements **77**
30.1 Tracking **77**
30.2 User-written data **77**
30.3 Quality of disk **77**

Annex A (normative) **Edge distortion test** **78**

Annex B (normative) **Compliance test** **79**

Annex C (normative) **CRC for ID fields** **81**

Annex D (normative) **Interleave, CRC, ECC, Resync for the data field** **82**

Annex E (normative) **Contents of the Control Zone** **87**

Annex F (normative) **Determination of the Resync patterns** **94**

Annex G (normative) **Measurement of the figure of merit** **99**

Annex H (normative) **Read Channel for measuring NBSNR and jitter** **100**

Annex I (normative) **Implementation Independent Mark Quality Determination (IIMQD) for the interchange of recorded media** **103**

Annex J (normative) **Air cleanliness class 100 000** **104**

Annex K (normative) **Position of the cartridge relative to the reference planes** **105**

Annex L (normative) **Relaxation by zones of the requirements for signals** **106**

Annex M (normative) **Test method for measuring the adsorbent force of the hub** **107**

Annex N (informative) **Track deviation measurement** **109**

© ISO/IEC 2005 All rights reserved

Copyright International Organization for Standardization
Reproduced by IHS under license with ISO
No reproduction or networking permitted without license from IHS
Not for Resale

Annex O (informative) **Derivation of the operating climatic environment** **113**
Annex P (informative) **Transportation** **118**
Annex Q (informative) **Office environment** **119**
Annex R (informative) **Values to be implemented in existing and future standards** **120**
Annex S (informative) **Measurement of the vertical birefringence of the substrate** **121**
Annex T (informative) **Sector retirement guidelines** **123**
Annex U (informative) **Laser power calibration for evaluation of media power sensitivity** **124**

--`,,`,`-`-`,,`,,`,`,,`---

© ISO/IEC 2005 – All rights reserved
Copyright International Organization for Standardization
Reproduced by IHS under license with ISO
No reproduction or networking permitted without license from IHS
Not for Resale

Foreword

ISO (the International Organization for Standardization) and IEC (the International Electrotechnical Commission) form the specialized system for worldwide standardization. National bodies that are members of ISO or IEC participate in the development of International Standards through technical committees established by the respective organization to deal with particular fields of technical activity. ISO and IEC technical committees collaborate in fields of mutual interest. Other international organizations, governmental and non-governmental, in liaison with ISO and IEC, also take part in the work. In the field of information technology, ISO and IEC have established a joint technical committee, ISO/IEC JTC 1.

International Standards are drafted in accordance with the rules given in the ISO/IEC Directives, Part 2.

The main task of the joint technical committee is to prepare International Standards. Draft International Standards adopted by the joint technical committee are circulated to national bodies for voting. Publication as an International Standard requires approval by at least 75 % of the national bodies casting a vote.

Attention is drawn to the possibility that some of the elements of this document may be the subject of patent rights. ISO and IEC shall not be held responsible for identifying any or all such patent rights.

ISO/IEC 22533 was prepared by Ecma (as ECMA-353) and was adopted, under a special fast-track procedure, by Joint Technical Committee ISO/IEC JTC 1, *Information technology*, Subcommittee SC 23, *Digital storage media for information interchange*, in parallel with its approval by national bodies of ISO and IEC.

© ISO/IEC 2005 All rights reserved

Copyright International Organization for Standardization
Reproduced by IHS under license with ISO
No reproduction or networking permitted without license from IHS
Not for Resale

--`,,`,,`-`-`,,`,,`,`,,`---

Copyright International Organization for Standardization
Reproduced by IHS under license with ISO
No reproduction or networking permitted without license from IHS

Not for Resale

Information technology — Data interchange on 90 mm optical disk cartridges — Capacity: 2,3 Gbytes per cartridge

Section 1 - General

1 Scope

This International Standard defines the characteristics of 90 mm Optical Disk Cartridges (ODC) with a capacity of 2,3 GB per Cartridge. The Standard specifies only Type R/W for 2 048–byte sectors of such cartridge.

Type R/W provides for data to be written, read and erased many times over the entire recording surface of the disk using the thermo-magnetic and magneto-optical effects. It is also referred to as "fully rewritable". This International Standard provides for 2 048-byte sectors only. All sectors on a disk are of the same size.

This International Standard specifies

— the conditions for conformance testing and the Reference Drive;

— the environments in which the cartridges are to be operated and stored;

— the mechanical and physical characteristics of the cartridge, so as to provide mechanical interchange ability between data processing systems;

— the format of the information on the disk, both embossed and user-written; including the physical disposition of the tracks and sectors, the error correction codes, and the modulation method used;

— the characteristics of the embossed information on the disk;

— the magneto-optical characteristics of the disk, enabling processing systems to write data onto the disk;

— the minimum quality of user-written data on the disk, enabling data processing systems to read data from the disk.

This International Standard provides for interchange between optical disk drives. Together with a standard for volume and file structure, it provides for full data interchange between data processing systems.

2 Conformance

2.1 Optical disk Cartridge (ODC)

A claim of conformance with this International Standard shall specify the Type of the ODC. It shall be in conformance if it meets all mandatory requirements specified herein for that Type.

2.2 Generating system

A claim of conformance with this International Standard shall specify which Type is supported. A system generating an ODC for interchange shall be in conformance with this International Standard if it meets the mandatory requirements of this International Standard for the Type specified.

--`,,`,`-`-`,,`,,`,`,,`---

© ISO/IEC 2005 All rights reserved

Copyright International Organization for Standardization
Reproduced by IHS under license with ISO
No reproduction or networking permitted without license from IHS
Not for Resale

2.3 Receiving system

A claim of conformance with this International Standard shall specify which Type is supported. A system receiving an ODC for interchange shall be in conformance with this International Standard if it is able to process any recording made on the cartridge in accordance with 2.1 on the Type specified.

2.4 Compatibility statement

A claim of conformance with this International Standard shall include a statement listing any other International Standard supported by the system for which conformance is claimed. This statement shall specify the number of the Standard(s), the ODC type(s) supported (where appropriate) and whether support includes reading or both reading and writing.

3 Normative references

The following referenced documents are indispensable for the application of this document. For dated references, only the edition cited applies. For undated references, the latest edition of the referenced document (including any amendments) applies.

ECMA-287 *Safety of electronic equipment (2002)*

4 Terms and definitions

For the purposes of this document, the following terms and definitions apply:

4.1
band
Part of the Data Zone comprising a fixed number of consecutive physical tracks.

4.2
case
The housing for an optical disk, that protects the disk and facilitates disk interchange.

4.3
Channel bit
The smallest element for the representation of data on a disk. It is recorded as either a space or a mark. Twelve Channel bits are used to represent eight input bits.

4.4
clamping zone
The annular part of the disk within which the clamping force is applied by the clamping device.

4.5
control track
A track containing the information on media parameters and format necessary for writing, reading and erasing the remaining tracks on the optical disk.

4.6
Cyclic Redundancy Check (CRC)
A method for detecting errors in data.

4.7
defect management
A method for handling the defective areas on the disk.

© ISO/IEC 2005 – All rights reserved
Copyright International Organization for Standardization
Reproduced by IHS under license with ISO
No reproduction or networking permitted without license from IHS
Not for Resale

4.8
disk reference plane
A plane defined by the perfectly flat annular surface of an ideal spindle onto which the clamping zone of the disk is clamped, and which is normal to the axis of rotation.

4.9
embossed mark
A mark so formed as to be unalterable by magneto-optical means.

4.10
entrance surface
The surface of the disk on to which the optical beam first impinges.

4.11
Error Correction Code (ECC)
An error-detecting code designed to correct certain kinds of errors in data.

4.12
field
A subdivision of a sector.

4.13
format
The arrangement or layout of information on the disk.

4.14
fully rewritable disk
An optical disk in which the data in specified areas can be rewritten by an optical beam.

4.15
groove
See 4.19.

4.16
hub
The central feature on the disk which interacts with the spindle of the disk drive to provide radial centring and the clamping force.

4.17
interleaving
The process of allocating the physical sequence of units of data so as to render the data more immune to burst errors.

4.18
Kerr rotation
The rotation of the plane of polarization of an optical beam upon reflection from the recording layer, as caused by the magneto-optical effect.

4.19
land and groove
A trench-like feature of the disk, applied before the recording of any information, and used to define the track location. The groove is located nearer to the entrance surface than the land with which it is paired to form a track.

4.20
logical track
17 consecutive sectors for disks with 2 048-byte sectors in one or more physical tracks. The first sector of each logical track is assigned sector number 0.

--`,,`,`-`-`,,`,,`,`,,`---
© ISO/IEC 2005 All rights reserved

Copyright International Organization for Standardization
Reproduced by IHS under license with ISO
No reproduction or networking permitted without license from IHS
Not for Resale

4.21
logical ZCAV
A disk format requiring Zoned Constant Angular Velocity operation and with tracks n in the Data Zone all being logical tracks.

4.22
mark
A feature of the recording layer which may take the form of a magnetic domain, a pit, or any other type or form that can be sensed by the optical system. The pattern of marks represents the data on the disk.

NOTE 1 Subdivisions of a sector which are named 'mark' are not marks in the sense of this definition.

4.23
optical disk
A disk that will accept and retain information in the form of marks in a recording layer, that can be read with an optical beam.

4.24
optical disk cartridge (ODC)
A device consisting of a case containing an optical disk.

4.25
physical track
The path which is followed by the focus of the optical beam during one revolution of the disk.

4.26
physical track group
A fixed number of consecutive physical tracks in the Data Zone.

4.27
pitch
The distance between adjacent physical track centrelines, measured in a radial direction.

4.28
polarization
The direction of polarization of an optical beam is the direction of the electric vector of the beam.

NOTE 2 The plane of polarization is the plane containing the electric vector and the direction of propagation of the beam. The polarization is right-handed when to an observer looking in the direction of propagation of the beam, the end-point of the electric vector would appear to describe an ellipse in the clockwise sense.

4.29
read power
The optical power, incident at the entrance surface of the disk, used when reading.

NOTE 3 It is specified as a maximum power that may be used without damage to the written data. Lower power may be used provided that the signal-to-noise ratio and other requirements of this International Standard are met.

4.30
recording layer
A layer of the disk on, or in, which data is written during manufacture and/or use.

4.31
Reed-Solomon code
An error detection and/or correction code which is particularly suited to the correction of errors which occur in bursts or are strongly correlated.

© ISO/IEC 2005 – All rights reserved
Copyright International Organization for Standardization
Reproduced by IHS under license with ISO
No reproduction or networking permitted without license from IHS
Not for Resale

4.32
sector
The smallest addressable part of a track in the Information Zone of a disk that can be accessed independently of other addressable parts of the zone.

4.33
space
The area between marks along the track.

4.34
spindle
The part of the disk drive which contacts the disk and/or hub.

4.35
substrate
A transparent layer of the disk, provided for mechanical support of the recording layer, through which the optical beam accesses the recording layer.

4.36
zone
An annular area of the disk.

5 Conventions and notations

5.1 Representation of numbers

A measured value is rounded off to the least significant digit of the corresponding specified value. It implies that a specified value of 1,26 with a positive tolerance of +0,01, and a negative tolerance of -0,02 allows a range of measured values from 1,235 to 1,275.

Letters and digits in parentheses represent numbers in hexadecimal notation.

The setting of a bit is denoted by ZERO or ONE.

Numbers in binary notation and bit combinations are represented by strings of digits 0 and 1.

Numbers in binary notation and bit combinations are shown with the most significant bit to the left.

Negative values of numbers in binary notation are given in TWO's complement.

In each field the data is recorded so that the most significant byte (byte 0) is recorded first. Within each byte the least significant bit is numbered 0 and is recorded last, the most significant bit (numbered 7 in an 8-bit byte) is recorded first. This order of recording applies also to the data input of the Error Detection and Correction circuits and to their output.

Unless otherwise stated, all track numbers refer to logical tracks.

5.2 Names

The names of entities, e.g. specific tracks, fields, etc., are given with a capital initial.

6 Abbreviations and acronyms

AM	Address Mark
CRC	Cyclic Redundancy Check

--`,,`,`-`-`,,`,,`,`,,`---

© ISO/IEC 2005 All rights reserved

Copyright International Organization for Standardization
Reproduced by IHS under license with ISO
No reproduction or networking permitted without license from IHS
Not for Resale

DDS	Disk Definition Structure
DMA	Defect Management Area
ECC	Error Correction Code
FA1	Functional Area 1
FA2	Functional Area 2
ID	Identifier
LSB	Least Significant Byte
MO	Magneto-Optical
MSB	Most Significant Byte
ODC	Optical Disk Cartridge
PA	Postamble
PDL	Primary Defect List
RLL (1,7)	Run Length Limited (code)
R/W	Rewritable
SDL	Secondary Defect List
SM	Sector Mark
TIA	Time Interval Analyser
VCO	Voltage Controlled Oscillator
VFO	Variable Frequency Oscillator
ZCAV	Zoned Constant Angular Velocity

7 General description of the optical disk cartridge

The optical disk cartridge which is the subject of this International Standard consists of a case containing an optical disk.

The case is a protective enclosure for the disk. It has access windows covered by a shutter. The windows are automatically uncovered by the drive when the cartridge is inserted into it.

The optical disk is recordable on one side. Data can be written onto the disk as marks in the form of magnetic domains in the recording layer and can be erased from it with a focussed optical beam, using the thermo-magnetic effect. Data may be directly written over existing data by modulating the intensity of the optical beam. The data can be read with a focussed optical beam, using the magneto-optical effect. The beam accesses the recording layer through the transparent substrate of the disk.

8 General requirements

8.1 Environments

8.1.1 Testing environment

The test environment is the environment where the air immediately surrounding the optical disk cartridge has the following properties:

temperature	: 23 °C ± 2 °C
relative humidity	: 45 % to 55 %

© ISO/IEC 2005 – All rights reserved
Copyright International Organization for Standardization
Reproduced by IHS under license with ISO
No reproduction or networking permitted without license from IHS
Not for Resale

atmospheric pressure	: 60 kPa to 106 kPa
air cleanliness	: Class 100 000 (see Annex J)

No condensation on or in the optical disk cartridge shall occur. Before testing, the optical disk cartridge shall be conditioned in this environment for 48 h minimum. It is recommended that, before testing, the entrance surface of the optical disk shall be cleaned according to the instructions of the manufacturer of the disk.

Unless otherwise stated, all tests and measurements shall be made in this test environment.

8.1.2 Operating environment

This International Standard requires that an optical disk cartridge which meets all requirements of this International Standard in the specified test environment provides data interchange over the specified ranges of environmental parameters in the operating environment.

The operating environment is the environment where the air immediately surrounding the optical disk cartridge has the following properties:

Temperature	: 5 °C to 55 °C
relative humidity	: 3 % to 85 %
absolute humidity	: 1 g/m^3 to 30 g/m^3
atmospheric pressure	: 60 kPa to 106 kPa
temperature gradient	: 10 °C/h max.
relative humidity gradient	: 10 %/h max.
air cleanliness	: Office environment (see Annex Q.1)
magnetic field strength at the recording layer for	
any condition under which a beam is in focus	: 36 000 A/m max. (see Annex Q.2)
magnetic field strength at the recording layer	
during any other condition	: 48 000 A/m max.

No condensation on or in the optical disk cartridge shall occur. If an optical disk cartridge has been exposed to conditions outside those specified in this Clause, it shall be acclimatized in an allowed operating environment for at least 2 h before use. (See also Annex O)

8.1.3 Storage environment

The optical disk cartridge without any protective enclosure shall not be stored in an environment outside the range allowed for storage. The storage environment is defined as an environment where the air immediately surrounding the optical disk cartridge has the following properties:

temperature	: - 10 °C to 55 °C
relative humidity	: 3 % to 90 %
absolute humidity	: 1 g/m^3 to 30 g/m^3
atmospheric pressure	: 60 kPa to 106 kPa
temperature gradient	: 15 °C /h max.
relative humidity gradient	: 10 %/h max.
air cleanliness	: Office environment (see Annex Q.1)
magnetic field strength at the recording layer	: 48 000 A/m max.

--`,,`,`-`-`,,`,,`,`,,`---
© ISO/IEC 2005 All rights reserved
Copyright International Organization for Standardization
Reproduced by IHS under license with ISO
No reproduction or networking permitted without license from IHS
Not for Resale

No condensation on or in the optical disk cartridge shall occur.

8.1.4 Transportation

This International Standard does not specify requirements for transportation; guidance is given in Annex P.

8.2 Temperature shock

The optical disk cartridge shall withstand a temperature shock of up to 20 °C when inserted into, or removed from, the drive.

8.3 Safety requirements

The cartridge shall satisfy the safety requirements of Standard ECMA-287, when used in the intended manner or in any foreseeable use in an information processing system.

8.4 Flammability

The cartridge and its components shall be made from materials that comply with the flammability class for HB materials, or better, as specified in Standard ECMA-287.

9 Reference Drive

The Reference Drive is a drive several critical components of which have well defined properties and which is used to test write, read and erase parameters of the disk for conformance to this International Standard. The critical components vary from test to test. This Clause gives an outline of all components; components critical for tests in specific Clauses only are specified in these Clauses.

9.1 Optical system

The basic set-up of the optical system of the Reference Drive used for measuring the write, read and erase parameters is shown in Figure 1. Different components and locations of components are permitted, provided that the performance remains the same as that of the set-up in Figure 1. The optical system shall be such that the detected light reflected from the entrance surface of the disk is minimized so as not to influence the accuracy of the measurements.

In the absence of polarization changes in the disk, the polarizing beam splitter J shall be aligned to make the signal of detector K_1 equal to that of detector K_2. The direction of polarization in this case is called the neutral direction. The phase retarder N shall be adjusted such that the optical system does not have more than 2,5° phase retardation between the neutral polarization and the polarization perpendicular to it. This position of the retarder is called the neutral position.

The phase retarder can be used for the measurement of the narrow-band signal-to-noise ratio (see 26.2).

The beam splitter J shall have a p-s intensity reflectance ratio of at least 100.

The beam splitter E shall have an intensity reflectance R_p from F to H of nominally 0,30 for the neutral polarization direction. The reflectance R_s for the polarization perpendicular to the neutral direction shall be nominally 0,95. The actual value of R_s shall not be smaller than 0,90.

The imbalance of the magneto-optical signal is specified for a beam splitter with nominal reflectance. If the measurement is made on a drive with reflectance's R_p' and R_s' for beam splitter E, then the measured imbalance shall be multiplied by

© ISO/IEC 2005 – All rights reserved
Copyright International Organization for Standardization
Reproduced by IHS under license with ISO
No reproduction or networking permitted without license from IHS
Not for Resale

$$\sqrt{\frac{R_s R'_p}{R_p R'_s}}$$

to make it correspond to the nominal beam splitter E.

The output of Channel 1 is the sum of the currents through photodiodes K_1 and K_2, and is used for reading embossed marks. The output of Channel 2 is the difference between photo-diode currents, and is used for reading user-written marks with the magneto-optical effect.

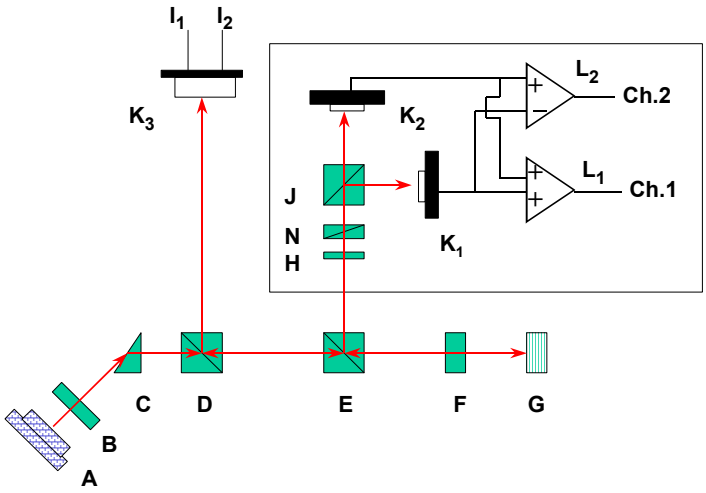

A	Laser diode	H	Optional half-wave plate
B	Collimator lens	N	Phase retarder
C	Optional shaping prism	J	Polarizing beam splitter
Ch.1	Channel 1	K_1, K_2	Photodiodes for Channels 1 and 2
Ch.2	Channel 2	K_3	Split photodiode
D	Beam splitter	L_1, L_2	d.c.-coupled amplifiers
E	Polarizing beam splitter	M	Tracking Channel (see 20.3)
F	Objective lens	I_1, I_2	Tracking signals from photodiode K_3
G	Optical disk		

Figure 1 - Optical system of the Reference Drive

9.2 Optical beam

The focussed optical beam used for writing, reading and erasing data shall have the following properties:

a)	Wavelength (λ)	665 nm ± 10 nm
b)	Wavelength (λ) divided by the numerical aperture of the objective lens (NA)	λ/ NA = 1,209 µm ± 0,018 µm
c)	Filling D/W of the aperture of the objective lens	0, 85 ± 0,05
d)	Variance of the wavefront of the optical beam near the recording layer, after passing through an ideal substrate.	0,033 λ rms

© ISO/IEC 2005 All rights reserved
Copyright International Organization for Standardization
Reproduced by IHS under license with ISO
No reproduction or networking permitted without license from IHS
Not for Resale

e) Polarization — Linear, parallel to the groove

f) Extinction ratio — 0,01 max.

g) The optical power and pulse width for writing, reading and erasing, and the magnetic field shall be as specified in 20.2.2, 24.2.2, 24.3, 24.4, and 28.2.2.

D is the diameter of the lens aperture and W is the beam diameter of the Gaussian beam where the intensity is $1/e^2$ of the maximum intensity.

The extinction ratio is the ratio of the minimum over the maximum power observed behind a linear polarizer in the optical beam, which is rotated over at least 180 °.

9.3 Read channels

Two read channels shall be provided to generate signals from the marks in the recording layer. Channel 1 shall be used for reading the embossed marks, using the diffraction of the optical beam by the marks. Unless otherwise stated, the signal of Channel 1 is not equalized before detection. Channel 2 shall be used for reading the user-written marks, using the rotation of the polarization of the optical beam due to the magneto-optical effect of the marks. The read amplifiers after the photo-detectors in Channel 1 and Channel 2 shall have a flat response within 1 dB from d.c. to 40 MHz. Unless otherwise stated, the signal of Channel 1 is not equalized before detection.

The signal from Channel 2 is not equalized before detection. The signal shall be filtered with a 3-pole Butterworth low-pass filter with a cut-off frequency of one half the Channel clock frequency.

9.4 Tracking

The Tracking channel of the drive provides the tracking error signals to control the servos for the axial and radial tracking of the optical beam. The method of generating the axial tracking error is not specified for the Reference Drive. The radial tracking error is generated by a split photodiode detector K_3 in the tracking channel. The division of the diode runs parallel to the image of the tracks on the diode.

The requirements for the accuracy with which the focus of the optical beam must follow the tracks is specified in 20.2.4.

9.5 Rotation of the disk

The spindle shall position the disk as specified in 12.4. It shall rotate the disk at 50,0 Hz $\pm$ 0,5 Hz. The direction of rotation shall be counter-clockwise when viewed from the objective lens.

© ISO/IEC 2005 – All rights reserved
Copyright International Organization for Standardization
Reproduced by IHS under license with ISO
No reproduction or networking permitted without license from IHS
Not for Resale

Section 2 - Mechanical and physical characteristics

10 Dimensional and physical characteristics of the case

10.1 General description of the case (see Figure 2)

The case is a rigid protective container of rectangular shape. It has a spindle window on Side A to allow the spindle of the drive to clamp the disk by its hub. Both Side A and Side B of the case have a head window, the one on Side A for the optical head of the drive, the other one on Side B for the magnetic head providing the necessary magnetic fields. A shutter uncovers the windows upon insertion into the drive, and automatically covers them upon removal from the drive. The case has features that enable a drive to reject a mis-inserted cartridge, write-inhibit and reflectance detection features, and gripper slots for an autochanger.

10.2 Reference planes of the case

The dimensions of the case shall be referred to three orthogonal reference planes X, Y and Z. The case shall be constrained such that four reference surfaces S1 to S4 on Side A of the case lie in plane Z when measuring those dimensions of the case in 10.3 which are referenced to this plane. The intersection of the three planes defines the centre of the location hole. The centre of the alignment hole shall lie in the X plane (see Annex K). A dimension of a feature referenced to one of the planes is the shortest distance from the feature to the plane.

10.3 Dimensions of the case

The dimensions of the case shall be measured in the test environment. The dimensions of the case in an operating environment can be estimated from the dimensions specified in this Clause.

10.3.1 Overall dimensions (see Figure 3)

The total length of the case shall be

L_1 = 94,0 mm ± 0,3 mm

The distance from the top of the case to reference plane X shall be

L_2 = 76,0 mm ± 0,2 mm

The distance from the bottom of the case to reference plane X shall be

L_3 = 18,0 mm ± 0,2 mm

The total width of the case shall be

$$L_4 = 90{,}0\ \text{mm}\ {}^{+\ 0{,}0\ \text{mm}}_{-\ 0{,}4\ \text{mm}}$$

The distance from the left hand side of the case to reference plane Y shall be

L_5 = 85,0 mm ± 0,3 mm

The distance from the right hand side of the case to reference plane Y shall be

L_6 = 5,0 mm ± 0,1 mm

© ISO/IEC 2005 All rights reserved

Copyright International Organization for Standardization
Reproduced by IHS under license with ISO
No reproduction or networking permitted without license from IHS
Not for Resale

The corner at the top shall be rounded with a radius

R_1 = 1,5 mm ± 0,2 mm

and the two corners at the bottom with a radius

R_2 = 2,0 mm ± 0,2 mm

In the zones extending

L_7 = 8,6 mm min.

from the left-hand and right-hand edges of the case, the thickness of the case shall be

L_8 = 6,0 mm ± 0,2 mm

The eight long edges of the case shall be rounded with a radius

$R_3 = 0{,}3\ ^{+\ 0{,}2\ \text{mm}}_{-\ 0{,}0\ \text{mm}}$

10.3.2 Location hole (see Figure 3)

The centre of the location hole shall coincide with the intersection of the planes X, Y and Z. The diameter of the hole shall be

$D_1 = 3{,}60\ ^{+\ 0{,}00\ \text{mm}}_{-\ 0{,}06\ \text{mm}}$

held to a depth

L_9 = 1,5 mm min.

The location hole shall extend below plane Z by

L_{10} = 4,0 mm min.

with a diameter equal to, or greater than D_1.

The location hole shall not extend through Side B.

The lead-in edges shall be rounded with a radius

R_4 = 0,5 mm max.

10.3.3 Alignment hole (see Figure 3)

The centre of the alignment hole shall lie in the X plane at a distance

L_{11} = 80,0 mm ± 0,2 mm

from reference plane Y.

© ISO/IEC 2005 – All rights reserved
Copyright International Organization for Standardization
Reproduced by IHS under license with ISO
No reproduction or networking permitted without license from IHS
Not for Resale

The alignment hole shall have a substantially rectangular shape. Its dimensions shall be

$$L_{12} = 3{,}60 \text{ mm} \begin{matrix} +\ 0{,}00 \text{ mm} \\ -\ 0{,}06 \text{ mm} \end{matrix}$$

$$L_{13} = 4{,}4 \text{ mm} \begin{matrix} +\ 0{,}2 \text{ mm} \\ -\ 0{,}0 \text{ mm} \end{matrix}$$

held to a depth L_9, below which the alignment hole shall extend to L_{10}, with dimensions equal to, or greater than, L_{12} and L_{13}, respectively.

The alignment hole shall not extend through Side B.

The lead-in edges shall be rounded with radius R_4.

10.3.4 Reference surfaces (see Figure 4)

Side A of the case shall contain four reference surfaces S1, S2, S3 and S4.

Surfaces S1 and S2 shall be circular with a diameter

D_2 = 7,0 mm min.

S1 shall be centred on the location hole, and S2 shall be centred on the alignment hole.

Surfaces S3 and S4 shall be circular with a diameter

D_3 = 6,0 mm min.

with their centres located at

L_{14} = 54,0 mm ± 0,2 mm

L_{15} = 1,0 mm ± 0,2 mm and

L_{16} = 81,0 mm ± 0,2 mm

No portion of the case or of the shutter mechanism (see 10.3.8) shall protrude more than

L_{17} = 0,15 mm max.

beyond plane Z.

10.3.5 Detents (see Figure 5)

The case shall have two symmetrical detents intended for autoloading. Each detent shall extend from plane Z up to

L_{18} = 5,0 mm min.

and shall not extend through Side B.

Each detent is defined by a semi-circular section with a radius

R_5 = 2,1 mm ± 0,1 mm

© ISO/IEC 2005 All rights reserved

Copyright International Organization for Standardization
Reproduced by IHS under license with ISO
No reproduction or networking permitted without license from IHS
Not for Resale

which stretches out to the side of the case along two straight lines extending from the semi-circle. The radii of the two detents originate from

L_{19} = 65,5 mm ± 0,2 mm

L_{20} = 4,0 mm max.

L_{21} = 84,0 mm max.

The outside edges of the detents shall be rounded off by a radius

R_6 = 0,5 mm ± 0,2 mm

10.3.6 Functional Areas (see Figure 6)

The case shall have an opening in Side A the length of which shall be

L_{22} = 8,2 mm min.

Its width shall be at least equal to L_{23}, and its centreline shall be located on the intersection of planes Y and Z.

Functional Area FA1 shall have the dimensions

L_{23} = 4,4 mm min.

L_{24} = 3,6 mm min.

Its centreline shall be in plane Z, and parallel to plane X at a distance

L_{25} = 7,8 mm ± 0,2 mm

from plane X. Side B shall have an opening corresponding to the surface of Functional Area FA1.

Functional Area FA2 shall have the dimensions L_{23}, L_{24} and

L_{26} = 4,0 mm min.

Its centreline shall be in plane Z, and parallel to plane X at a distance

L_{27} = 12,8 mm ± 0,2 mm

There shall be no opening in Side B corresponding to Functional Area FA2.

The cartridge shall have a device capable of either closing FA1 or FA2.

The two Functional Areas shall indicate the reflectance of the disk in the cartridge and whether or not writing on the disk is permitted, as specified in Table 1 (see also Figure 6).

Table 1 – Use of the Functional Areas FA1 and FA2

FA1	FA2	Writing	Reflectance	Type of Cartridge
Open	Closed	Inhibited	Low	R/W
Closed	Open	Permitted	Low	R/W

No other settings are allowed.

The surface of the device shall be at a distance

L_{28} = 0,3 mm max.

from plane Z.

© ISO/IEC 2005 – All rights reserved
Copyright International Organization for Standardization
Reproduced by IHS under license with ISO
No reproduction or networking permitted without license from IHS
Not for Resale

10.3.7 Spindle and head windows (see Figure 7)

Side A of the case shall have a window to enable the spindle and the optical head of the drive to access the disk.

The dimensions of the window are referenced to a centreline, located at a distance

L_{29} = 40,0 mm ± 0,05 mm

from plane Y.

The width of the window shall be given by

$L_{30} = 11{,}0\ \text{mm}\ {}^{+\ 0{,}2\ \text{mm}}_{-\ 0{,}0\ \text{mm}}$

and

$L_{31} = 11{,}0\ \text{mm}\ {}^{+\ 0{,}2\ \text{mm}}_{-\ 0{,}0\ \text{mm}}$

The top of the window shall be given by radius

R_7 = 44,3 mm min.

originating from L_{29} and

L_{32} = 27,0 mm ± 0,05 mm

The area bounded by R_7 and the top of the case shall be recessed from plane Z by

$L_{33} = 2{,}0\ \text{mm}\ {}^{+\ 0{,}2\ \text{mm}}_{-\ 0{,}0\ \text{mm}}$

over the width of the window.

The bottom of the window shall be the arc of the semi-circle which smoothly joins the sides of the window. The centre of the semi-circle shall be defined by L_{29} and L_{32}.

Side B of the case shall have a window to enable the magnetic head of the drive to access the disk. The dimensions of the window are referenced to a centreline, located at a distance L_{29} from plane Y. The width of the window shall be given by L_{30} and L_{31}. The window shall extend from

L_{34} = 40,0 mm max.

to the arc of R_7, originating from L_{29} and L_{32}.

The area bounded by R_7 and the top of the case shall be, over the width of the window, at a distance

$L_{35} = 4{,}2\ \text{mm}\ {}^{+\ 0{,}0\ \text{mm}}_{-\ 0{,}4\ \text{mm}}$

from plane Z.

The two inside corners shall be rounded with a radius

R_8 = 2,0 mm max.

© ISO/IEC 2005 All rights reserved

Copyright International Organization for Standardization
Reproduced by IHS under license with ISO
No reproduction or networking permitted without license from IHS
Not for Resale

10.3.8 Shutter (see Figure 8)

The case shall have a spring-loaded shutter designed to completely cover the spindle and head windows when closed. When open, the shutter shall expose the windows up to at least the minimum size allowed by the following dimensions, given in 10.3.7:

— on Side A: from the semi-circle at the bottom of the window up to the top of the case, and from L_{30} to L_{31};

— on Side B: from L_{34} up to the top of the case, and from L_{30} to L_{31};

— on the top: from plane Z to L_{33}, from L_{30} to L_{31}, from L_{35} up to Side B, and from L_{30} to L_{31}.

The shutter shall be free to slide in a recessed area of the case in such a way as to ensure that the overall thickness of the case and shutter does not exceed L_8 by more than L_{17}.

The shutter shall have one edge against which the shutter opener of the drive can push to open the shutter. When the shutter is closed, this edge shall be

$$L_{36} = 79{,}0 \text{ mm} \begin{matrix} +\ 0{,}0 \text{ mm} \\ -\ 0{,}3 \text{ mm} \end{matrix}$$

from plane Y. A movement of the edge to

L_{37} = 55,5 mm min.

shall be sufficient to open the windows to the minimum size specified in 10.3.8. It shall be possible to move the edge to

L_{38} = 54,7 mm max.

without exceeding the shutter opening force as specified in 10.4.5, while leaving the minimum size window open.

10.3.9 Path for shutter opener and shutter sensor notch (see Figure 9)

The profile on the top of the case provides a path over which the shutter opener of the drive can travel.

The path shall run from

L_{39} = 81,0 mm ± 0,3 mm

to

$$L_{40} = 57{,}5 \text{ mm} \begin{matrix} +\ 0{,}3 \text{ mm} \\ -\ 0{,}0 \text{ mm} \end{matrix}$$

at a distance

L_{41} = 74,2 mm ± 0,1 mm

from plane X.

The lead-in edge at L_{39} shall be a ramp to the top of the case with an angle

A_1 = 45 ° ± 5 °

--`,,`,`-`-`,,`,,`,`,,`---

© ISO/IEC 2005 – All rights reserved
Copyright International Organization for Standardization
Reproduced by IHS under license with ISO
No reproduction or networking permitted without license from IHS
Not for Resale

The path shall end in a notch with a width at the bottom from L_{40} to

L_{42} = 54,7 mm max.

and a depth

L_{43} = 3,1 mm ± 0,1 mm

below L_{41}. The lead-in edge at the right-hand side of the notch shall be rounded with a radius

R_9 = 1,2 mm ± 0,2 mm

When the shutter edge is moved to L_{37}, a length of at least (L_{40} -L_{37}) of the notch shall be exposed. This enables a drive to confirm that the shutter is fully open.

10.3.10 Mis-insert protections (see Figure 10)

The profile on the top of the case shall have two features to prevent the case from being inserted in the drive upside-down.

The first feature is a notch intended to capture and block the shutter opener of the drive if the case is loaded upside-down. It shall have a width from

L_{44} = 4,6 mm ± 0,2 mm

to

L_{45} = 1,0 mm ± 0,2 mm

and a depth

L_{46} = 3,1 mm ± 0,2 mm

below the top of the case.

The right-hand edge of the notch shall be

L_{47} = 75,4 mm ± 0,2 mm

above plane X.

The corners of this notch shall be rounded off by radii

R_{10} = 0,3 mm max.

R_{11} = 0,5 mm ± 0,3 mm

The second feature is a chamfer and a tooth. If the case is correctly loaded, the chamfer pushes aside a possible pawl in the side of the sledge of the drive. If the case is loaded upside-down, the pawl catches the tooth and prevents further insertion of the case. The tooth is formed by the ramp specified in 10.3.10. The chamfer shall have an angle

A_2 = 45 ° ± 2 °

and a height

L_{48} = 5,0 mm ± 0,3 mm

--`,,`,,`-`-`,,`,,`,`,,`---

© ISO/IEC 2005 All rights reserved

Copyright International Organization for Standardization
Reproduced by IHS under license with ISO
No reproduction or networking permitted without license from IHS
Not for Resale

10.3.11 Gripper slots (see Figure 11)

The case shall have two symmetrical gripper slots. Each slot shall have a depth of

$$L_{49} = 2{,}5 \text{ mm} \begin{matrix} +\ 0{,}3 \text{ mm} \\ -\ 0{,}0 \text{ mm} \end{matrix}$$

from the edge of the case and a width of

$$L_{50} = 4{,}0 \text{ mm} \begin{matrix} +\ 0{,}3 \text{ mm} \\ -\ 0{,}0 \text{ mm} \end{matrix}$$

The lower edge of a slot shall be

$$L_{51} = 23{,}0 \text{ mm} \begin{matrix} +\ 0{,}0 \text{ mm} \\ -\ 0{,}3 \text{ mm} \end{matrix}$$

above the bottom of the case.

The corners of the gripper slots shall be rounded off by radii

R_{12} = 0,4 mm ± 0,2 mm

R_{13} = 0,5 mm ± 0,2 mm

10.3.12 Label area (see Figure 12)

The case shall have one connected label area on Side A, the bottom and Side B, with dimensions

L_{52} = 4,0 mm ± 0,3 mm

L_{53} = 76,0 mm ± 0,3 mm

L_{54} = 30,0 mm ± 0,2 mm

and

L_{55} = 1,2 mm ± 0,2 mm

The four corners of the area shall be rounded with a radius

R_{14} = 2,0 mm max.

When there is no label, the area shall be recessed by

L_{56} = 0,2 mm min. on all three sides.

10.4 Mechanical characteristics

All requirements of this Clause shall be met in the operating environment.

10.4.1 Material

The case shall be constructed from any suitable materials such that it meets the requirements of this International Standard.

© ISO/IEC 2005 – All rights reserved
Copyright International Organization for Standardization
Reproduced by IHS under license with ISO
No reproduction or networking permitted without license from IHS
Not for Resale

10.4.2 Mass

The mass of the case without the optical disk shall not exceed 50 g.

10.4.3 Edge distortion

The cartridge shall meet the requirement of the edge distortion test defined in Annex A.

10.4.4 Compliance

The cartridge shall meet the requirement of the compliance (flexibility) test defined in Annex B. The requirement guarantees that a cartridge can be constrained in the proper plane of operation within the drive.

10.4.5 Shutter opening force

The spring force on the shutter shall be such that the force required to open the shutter does not exceed 1,5 N.

It shall be sufficiently strong to close a free-sliding shutter, irrespective of the orientation of the case.

© ISO/IEC 2005 – All rights reserved

Copyright International Organization for Standardization
Reproduced by IHS under license with ISO
No reproduction or networking permitted without license from IHS
Not for Resale

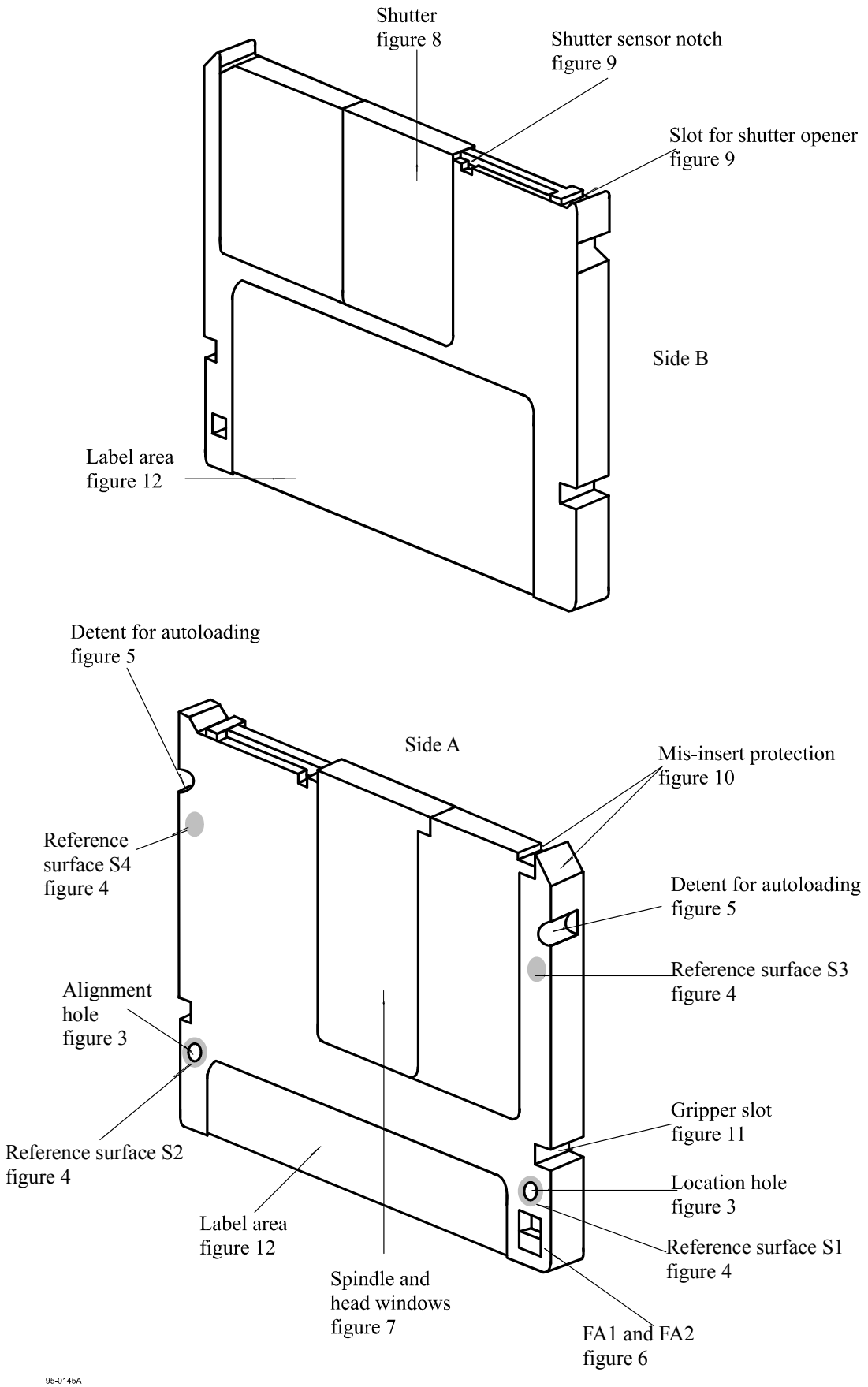

Figure 2 – General view of the case

© ISO/IEC 2005 – All rights reserved
Copyright International Organization for Standardization
Reproduced by IHS under license with ISO
No reproduction or networking permitted without license from IHS
Not for Resale

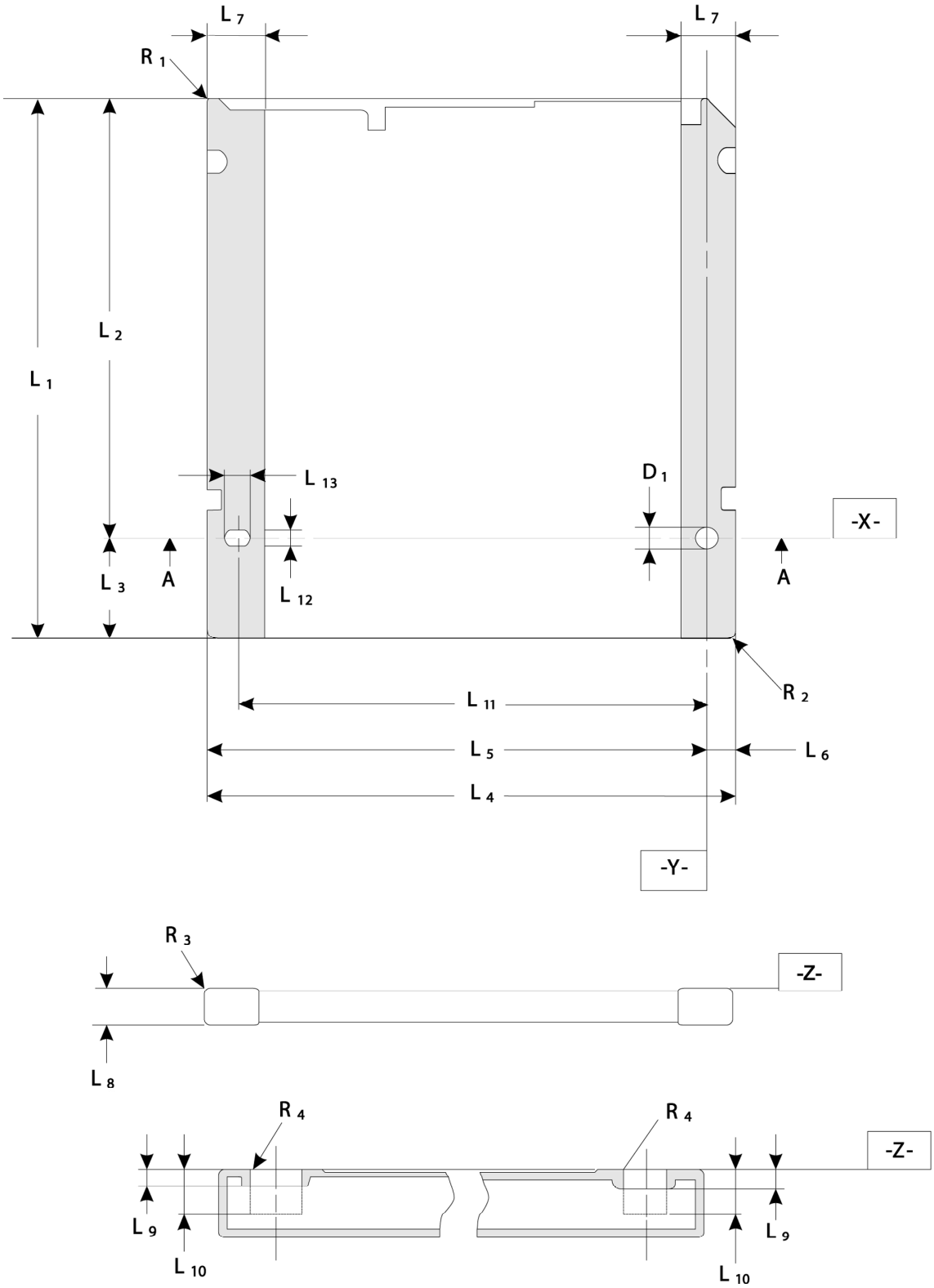

Section A-A

Figure 3 – Overall dimensions, viewed on Side A

© ISO/IEC 2005 – All rights reserved
Copyright International Organization for Standardization
Reproduced by IHS under license with ISO
No reproduction or networking permitted without license from IHS
Not for Resale

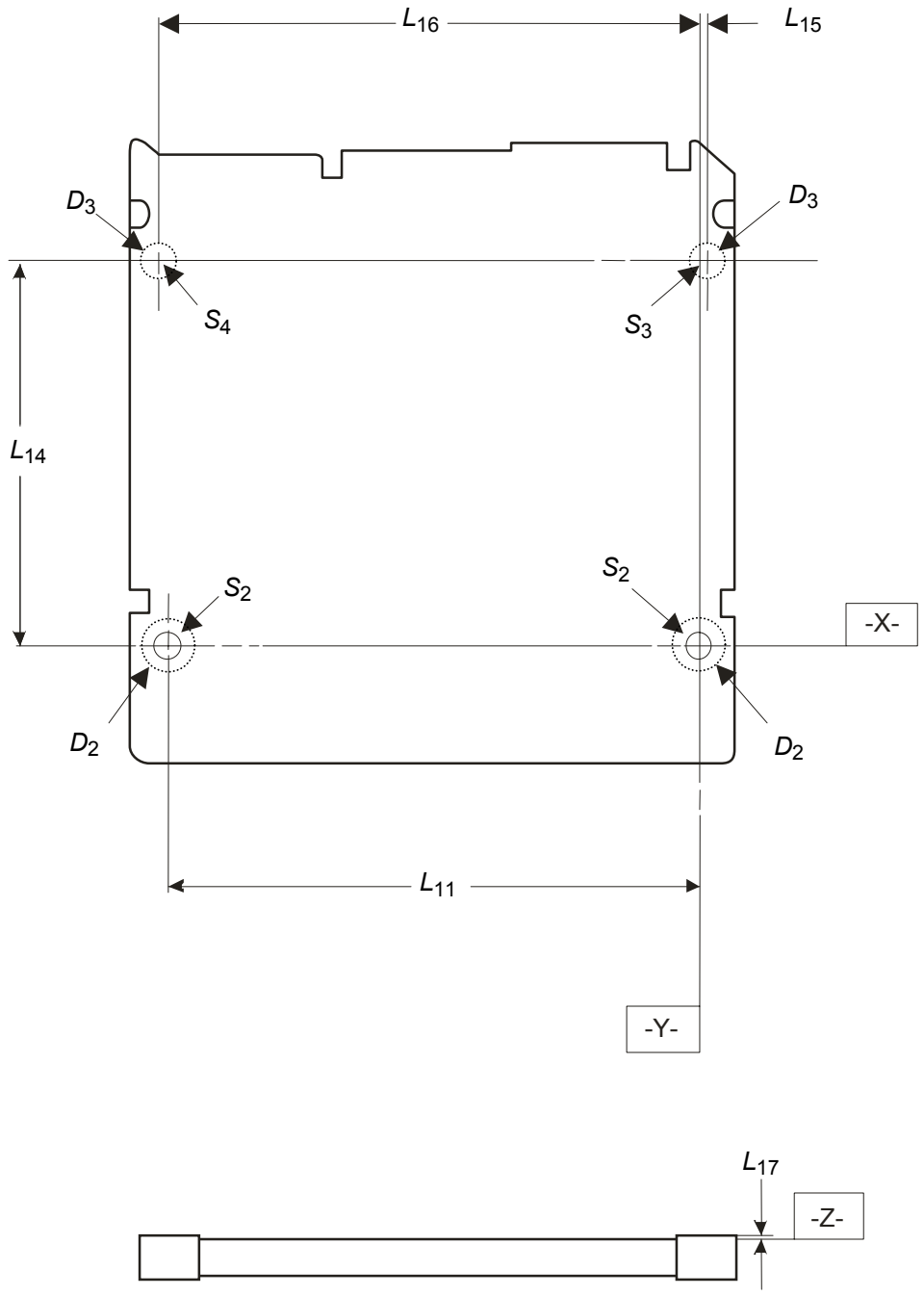

Figure 4 – Reference surfaces on Side A

© ISO/IEC 2005 – All rights reserved
Copyright International Organization for Standardization
Reproduced by IHS under license with ISO
No reproduction or networking permitted without license from IHS
Not for Resale

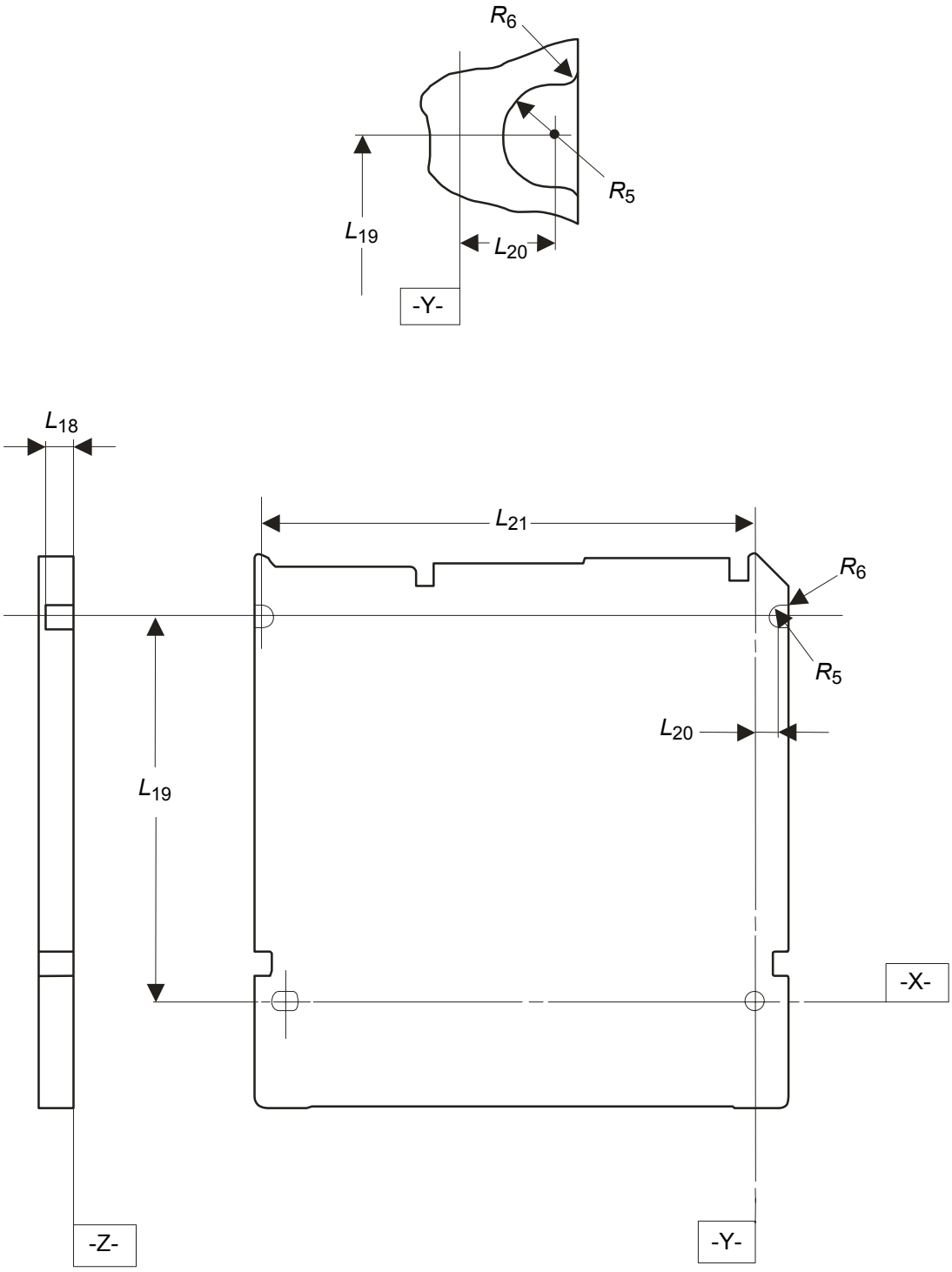

Figure 5 – Detents, seen on Side A

© ISO/IEC 2005 All rights reserved
Copyright International Organization for Standardization
Reproduced by IHS under license with ISO
No reproduction or networking permitted without license from IHS
Not for Resale

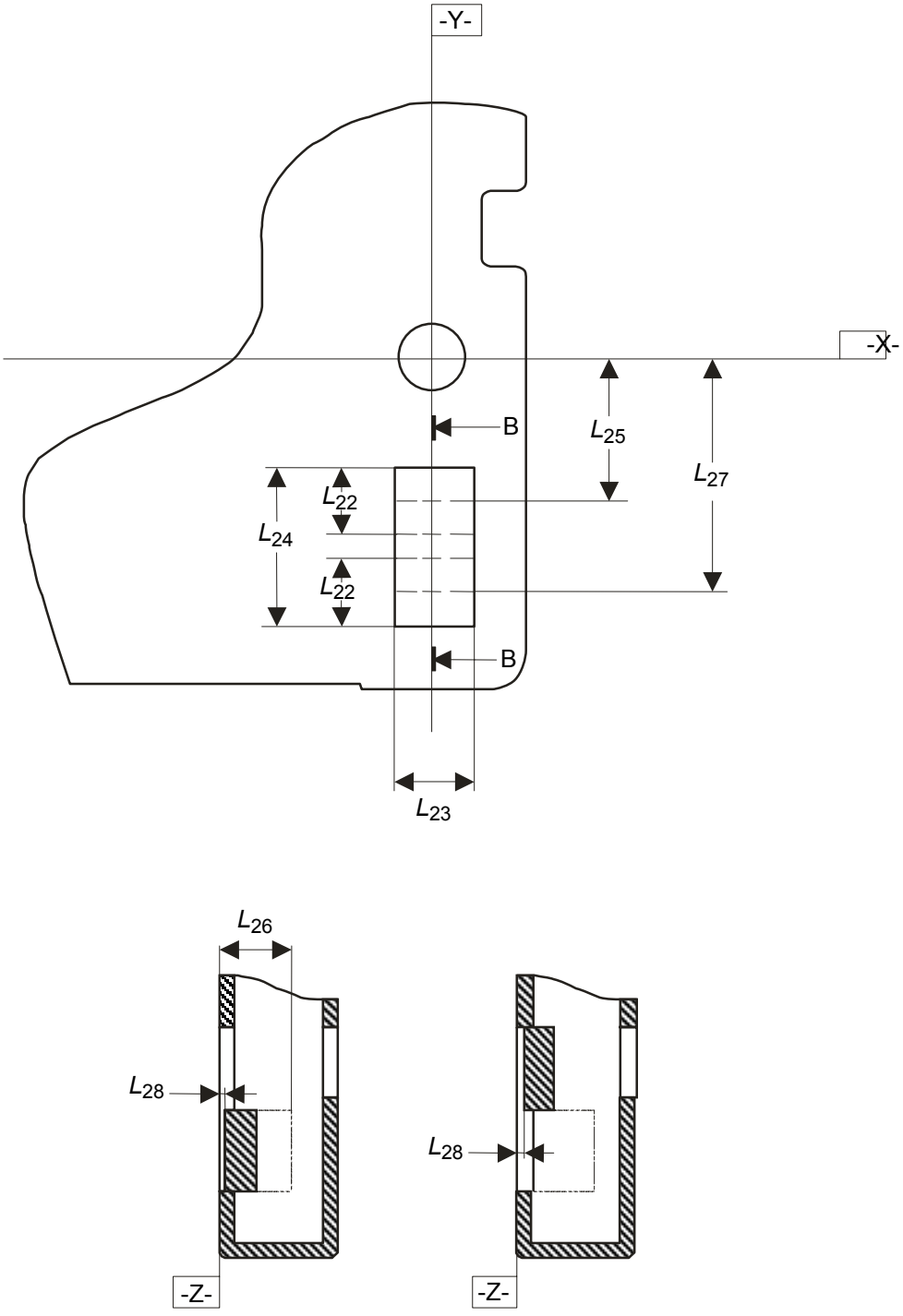

Figure 6 – Functional Areas FA1 and FA2, seen on Side A and in cross-section

© ISO/IEC 2005 – All rights reserved
Copyright International Organization for Standardization
Reproduced by IHS under license with ISO
No reproduction or networking permitted without license from IHS
Not for Resale

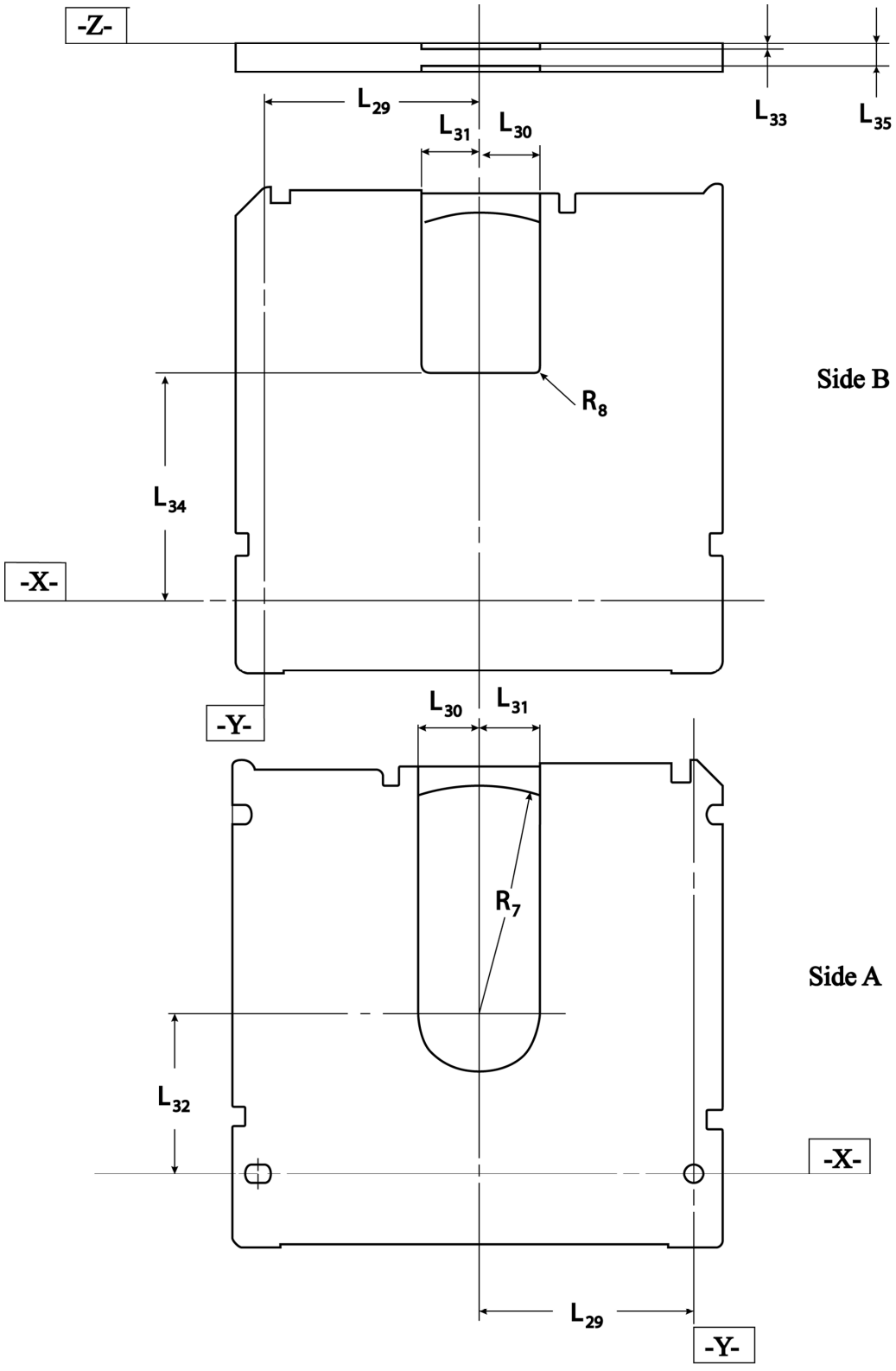

Figure 7 – Spindle and head windows on Side A and B of the case without shutter

--`,,`,`-`-`,,`,,`,`,,`---

© ISO/IEC 2005 All rights reserved

Copyright International Organization for Standardization
Reproduced by IHS under license with ISO
No reproduction or networking permitted without license from IHS
Not for Resale

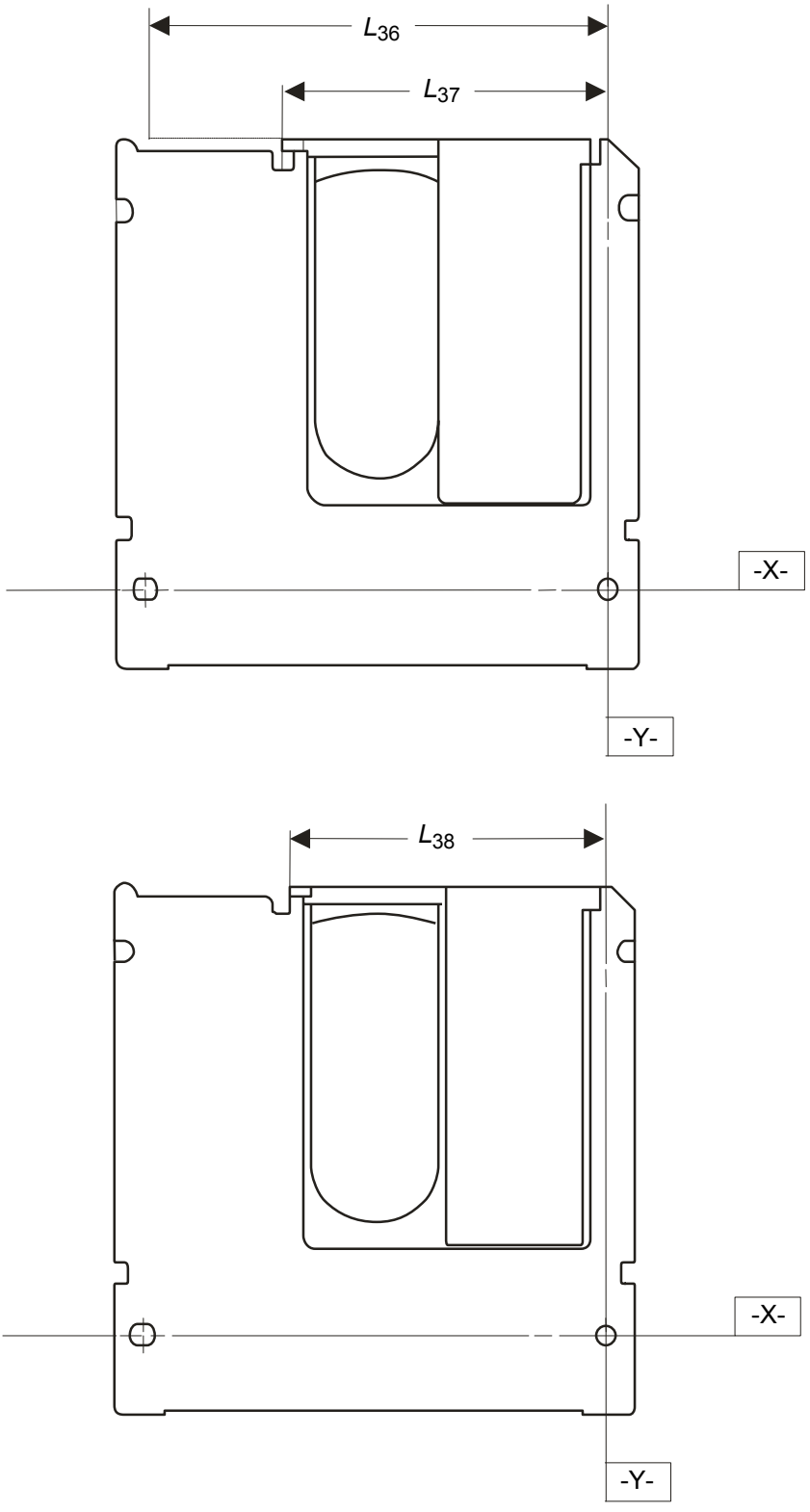

Figure 8 – Shutter in minimum open position (top) and maximum open position (bottom)

The dashed line indicates the position of the shutter edge when the shutter is closed

© ISO/IEC 2005 – All rights reserved
Copyright International Organization for Standardization
Reproduced by IHS under license with ISO
No reproduction or networking permitted without license from IHS
Not for Resale

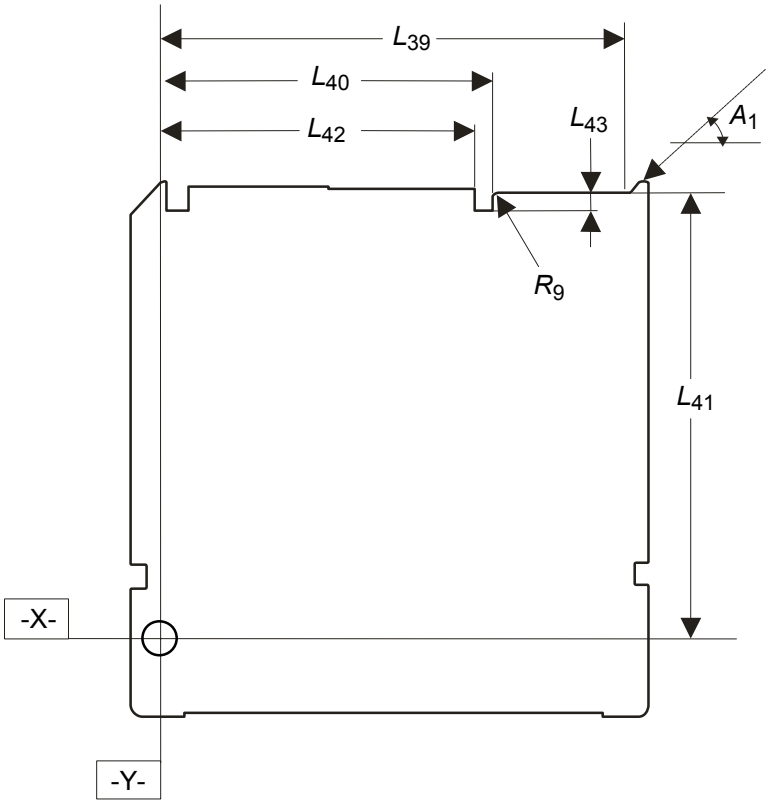

Figure 9 – Path for the shutter opener, seen from Side B without shutter

© ISO/IEC 2005 All rights reserved
Copyright International Organization for Standardization
Reproduced by IHS under license with ISO
No reproduction or networking permitted without license from IHS
Not for Resale

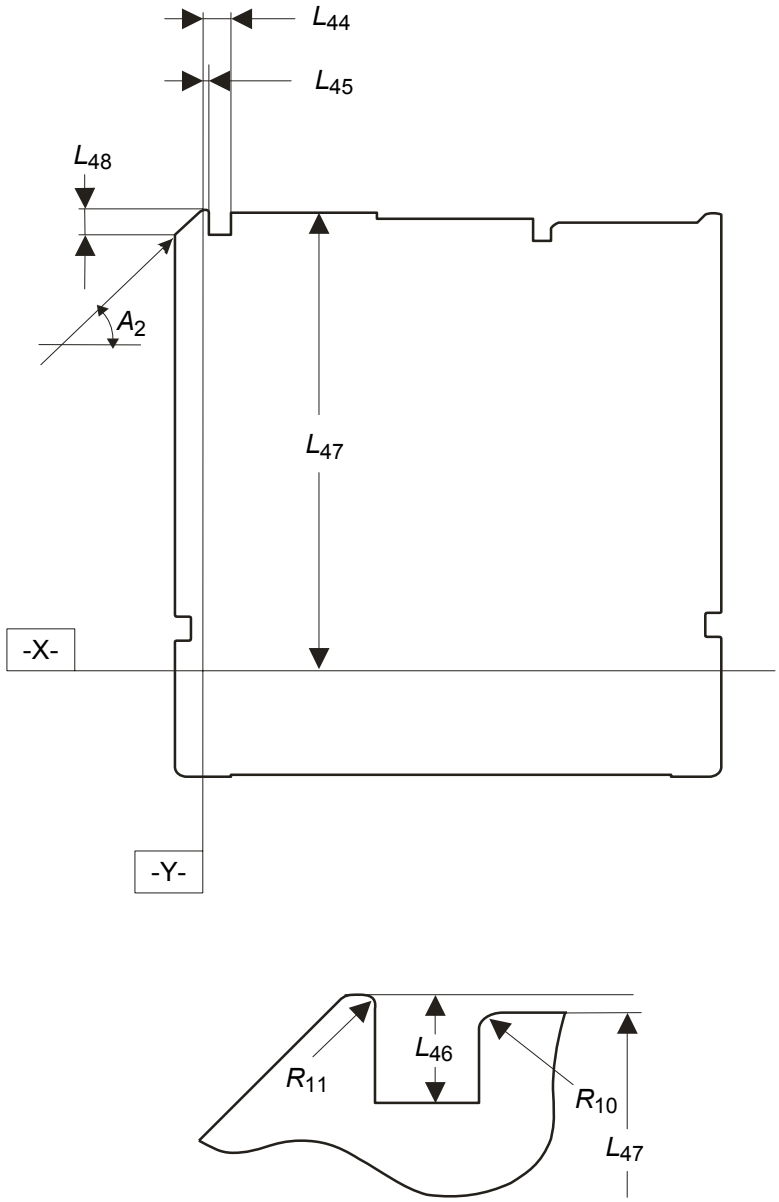

Figure 10 – Mis-insert protections, seen from Side B of the case without shutter

© ISO/IEC 2005 – All rights reserved
Copyright International Organization for Standardization
Reproduced by IHS under license with ISO
No reproduction or networking permitted without license from IHS
Not for Resale

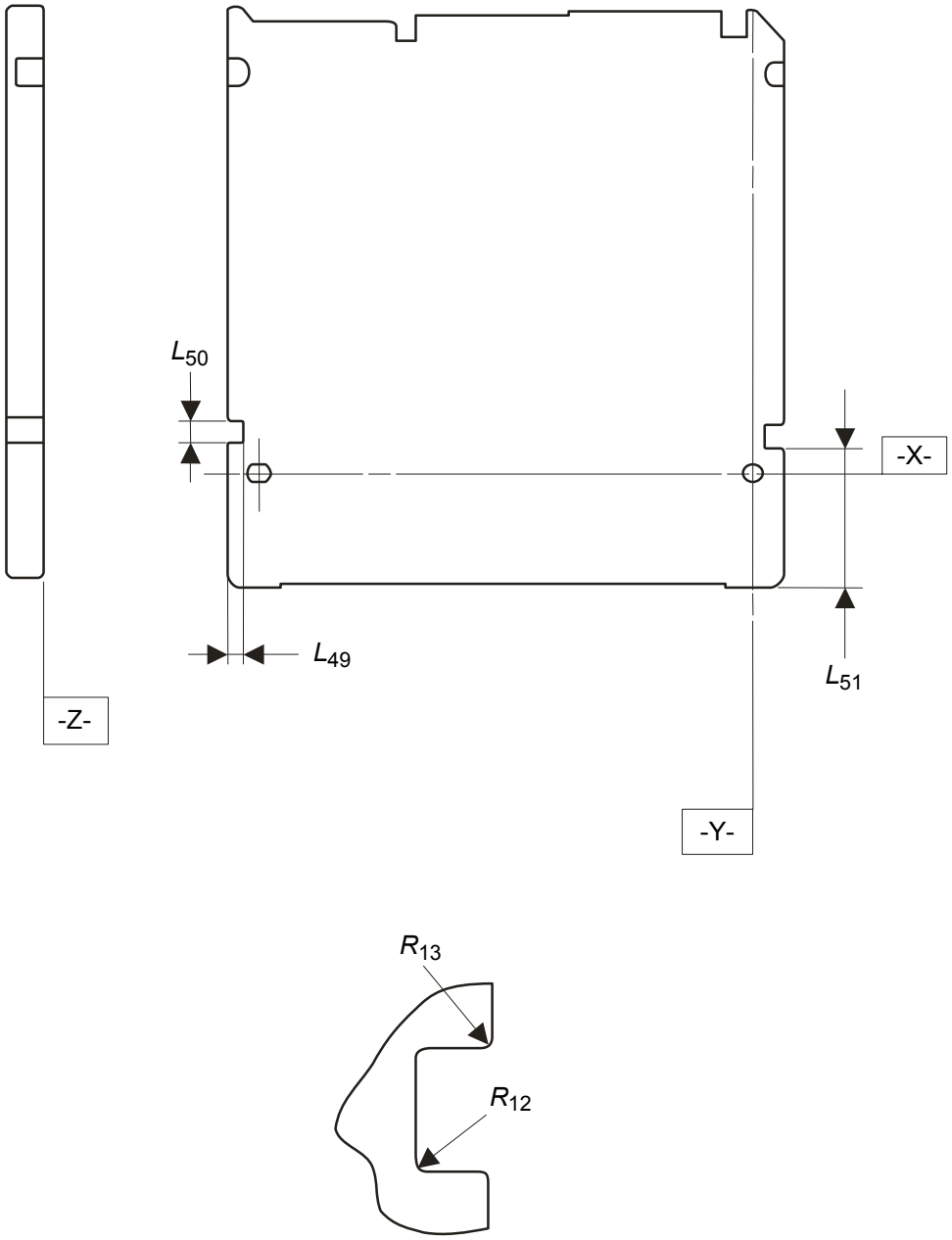

Figure 11 – Gripper slots seen from Side A of the case without shutter

© ISO/IEC 2005 All rights reserved
Copyright International Organization for Standardization
Reproduced by IHS under license with ISO
No reproduction or networking permitted without license from IHS
Not for Resale

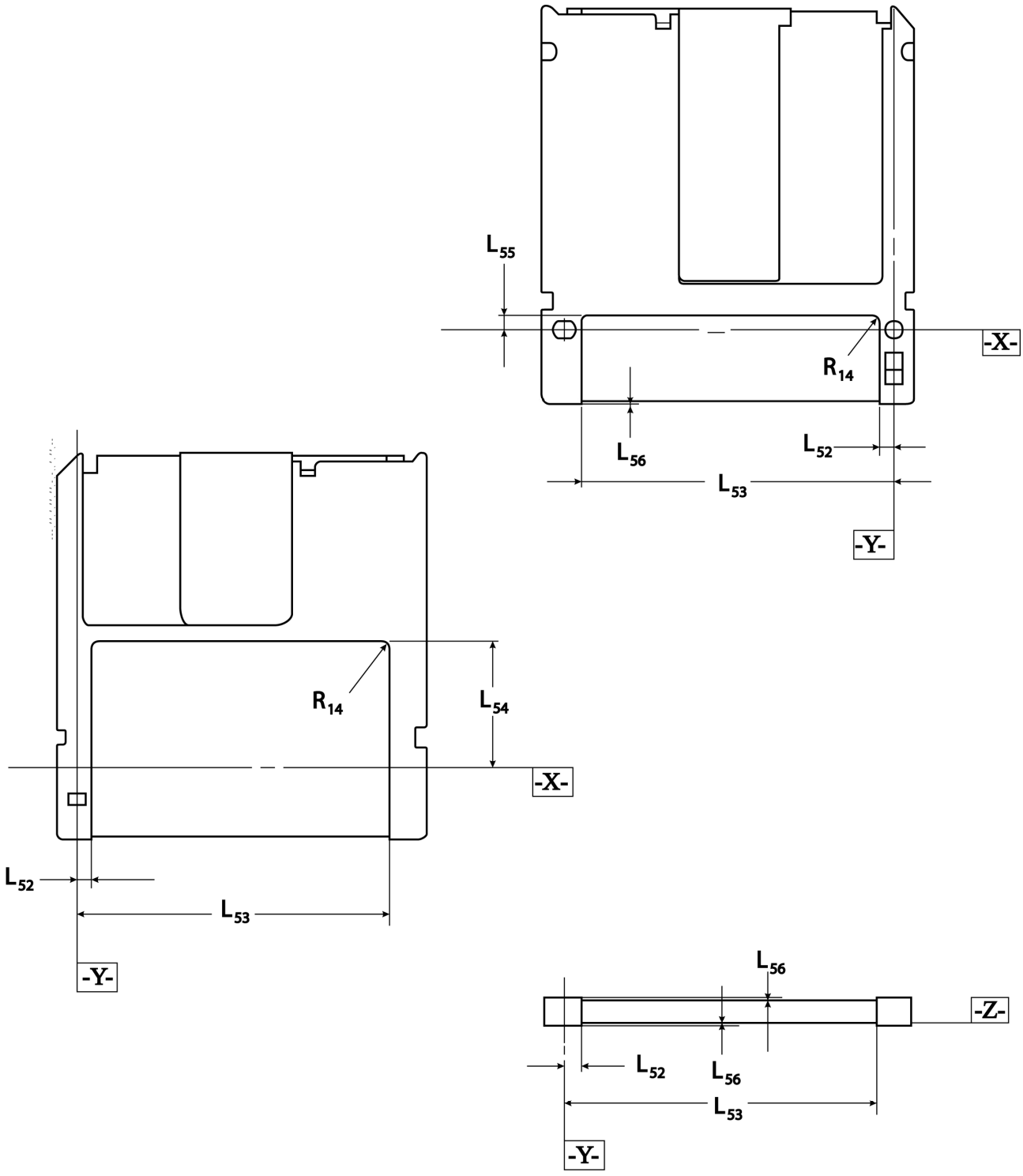

Figure 12 – Label area

© ISO/IEC 2005 – All rights reserved
Copyright International Organization for Standardization
Reproduced by IHS under license with ISO
No reproduction or networking permitted without license from IHS
Not for Resale

11 Dimensional, mechanical and physical characteristics of the disk

11.1 General description of the disk

The disk shall consist of a circular substrate with a hub on one side and a recording layer coated on the other side. The recording layer can be protected from environmental influences by a protective layer. The Information Zone of the substrate is transparent to allow an optical beam to focus on the recording layer through the substrate. The circular hub is in the centre of the disk on the side opposite to the recording layer. The hub interacts with the spindle of the drive and provides the radial centring of the disk and the clamping force.

11.2 Reference axis and plane of the disk

Some dimensions of the hub are referred to a disk reference plane P. The disk reference plane P is defined by the perfectly flat annular surface of an ideal spindle onto which the clamping zone of the disk is clamped, and which is normal to the axis of rotation of this spindle. This axis A passes through the centre of the centre hole of the hub, and is normal to plane P.

11.3 Dimensions of the disk (see Figure 13)

The dimensions of the disk shall be measured in the test environment. The dimensions of the disk in an operating environment can be estimated from the dimensions specified in this Clause. The outer diameter of the disk shall be

$$87{,}4 \text{ mm}\ {}^{+\,0{,}1 \text{ mm}}_{-\,0{,}2 \text{ mm}}$$

Excluding axial deflection (see 11.4.5), the total thickness of the disk without the hub shall not exceed 1,4 mm.

The diameter of the centre hole of the disk without the hub shall be

D_4 = 6,0 mm min.

11.3.1 Hub dimensions (see Figure 13)

The diameter of the centre hole of the hub shall be

$$D_5 = 4{,}004 \text{ mm}\ {}^{+\,0{,}012 \text{ mm}}_{-\,0{,}000 \text{ mm}}$$

The outer diameter of the hub shall be

$$D_6 = 15{,}0 \text{ mm}\ {}^{+\,0{,}0 \text{ mm}}_{-\,0{,}2 \text{ mm}}$$

The height of the hub shall be

$$h_1 = 1{,}2 \text{ mm}\ {}^{+\,0{,}0 \text{ mm}}_{-\,0{,}2 \text{ mm}}$$

The position of the top of the magnetizable surface shall be

$$h_2 = 1{,}20 \text{ mm}\ {}^{+\,0{,}00 \text{ mm}}_{-\,0{,}15 \text{ mm}}$$

© ISO/IEC 2005 All rights reserved

Copyright International Organization for Standardization
Reproduced by IHS under license with ISO
No reproduction or networking permitted without license from IHS
Not for Resale

The height of the centring hole above reference plane P shall be

h_3 = 0,8 mm min.

The centring length at a diameter D_5 shall be

h_4 = 0,15 mm min.

The lead-in edge of the centre hole shall have chamfer C_1 of 45° by 0,2 mm ± 0,1 mm or shall be rounded off by radius

R_{15} = 0,2 mm ± 0,1 mm

The outer edge of the centre hole shall have a chamfer C_2 of 45° by 0,4 mm ± 0,1 mm or shall be rounded off by radius

R_{16} = 0,4 mm ± 0,1 mm

The hub shall have any suitable magnetizable material for clamping the disk. Its dimensions shall be

D_9 = 13,0 mm min.

D_{10} = 6,0 mm max.

and its adsorbent force measured by the test device specified in Annex M shall be in the range of 3,0 N to 4,5 N.

11.3.2 Clamping zone (see Figure 13)

The outer diameter of the clamping zone shall be

D_7 = 21,0 mm min.

The inner diameter of the clamping zone shall be

D_8 = 16,0 mm max.

11.4 Mechanical characteristics

All requirements in this Clause shall be met in the operating environment.

11.4.1 Material

The disk shall be made from any suitable materials such that it meets the requirements of this International Standard. The only material properties specified by this International Standard are the magnetic properties of the magnetizable zone in the hub (see 11.3.1) and the optical properties of the substrate in the Information Zone (see 11.5).

11.4.2 Mass

The mass of the disk shall not exceed 24,0 g.

11.4.3 Moment of inertia

The moment of inertia of the disk relative to axis A shall not exceed 0,020 g•m^2.

© ISO/IEC 2005 – All rights reserved
Copyright International Organization for Standardization
Reproduced by IHS under license with ISO
No reproduction or networking permitted without license from IHS
Not for Resale

11.4.4 Imbalance

The imbalance of the disk relative to axis A shall not exceed 0,006 g•m.

11.4.5 Axial deflection

The axial deflection of the disk is measured as the axial deviation of the recording layer. Thus it comprises the tolerances on the thickness of the substrate, on its index of refraction and the deviation of the entrance surface from the Disk Reference Plane P. The nominal position of the recording layer with respect to the Disk Reference Plane P is determined by the nominal thickness of the substrate.

The deviation of any point of the recording layer in the Information Zone from its nominal position, in a direction normal to the Disk Reference Plane P, shall not exceed ± 0,15 mm for rotational frequencies of the disk as specified in 9.5. The deviation shall be measured by the optical system as specified in 9.1.

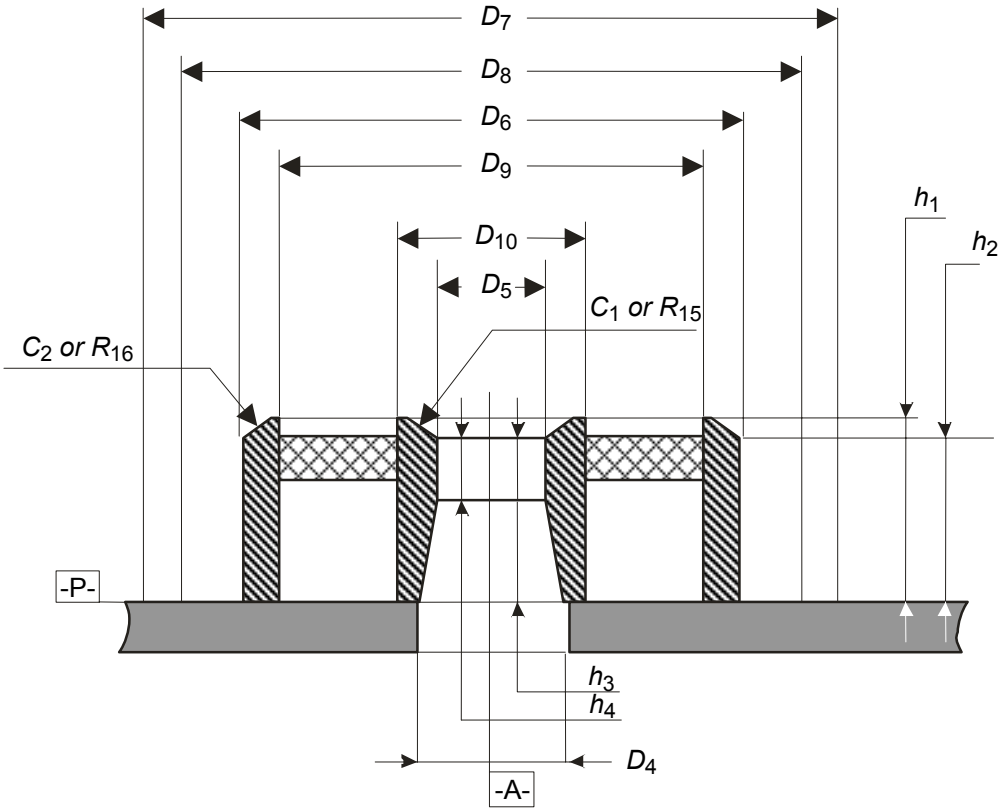

Figure 13 – Hub dimensions and clamping zone

11.4.6 Axial acceleration

The maximum allowed tracking error e_{max} (see Annex N) shall not exceed ± 0,5 µm, measured using the Reference Servo for axial tracking of the recording layer. The rotational frequency of the disk shall be as specified in 9.5. The stationary part of the motor is assumed to be motionless (no external disturbances). The measurement shall be made using a servo with the transfer function

$$H_s(i\omega) = \frac{1}{3} \times \left(\frac{\omega_0}{i\omega} \right)^2 \times \frac{1 + \frac{3i\omega}{\omega_0}}{1 + \frac{i\omega}{3\omega_0}}$$

© ISO/IEC 2005 All rights reserved

Copyright International Organization for Standardization
Reproduced by IHS under license with ISO
No reproduction or networking permitted without license from IHS
Not for Resale

where $\omega = 2\pi f$, $\omega_0/2\pi$ = 1 830 Hz, $i = \sqrt{-1}$

or any other servo with $|1+H|$ within 20 % of $|1+H_s|$ in the bandwidth of 50 Hz to 170 kHz. Thus, the disk shall not require an axial acceleration of more than 22 m/s^2 at low frequencies from the servo motor of the Reference Servo.

11.4.7 Radial runout

The radial runout of the tracks in the recording layer in the Information Zone is measured as seen by the optical head of the Reference Drive. Thus it includes the distance between the axis of rotation of the spindle and reference axis A, the tolerances on the dimensions between axis A and the location of the track, and effects of non-uniformities in the index of refraction.

The runout, defined as the difference between the maximum and minimum distance of the centre of any track from the axis of rotation, measured along a fixed radial line over one revolution of the disk, shall not exceed 40 µm at a rotational frequency of the disk as specified in 9.5.

11.4.8 Radial acceleration

The maximum allowed tracking error e_{max} (see Annex N) shall not exceed ± 0,04 µm, measured using the Reference Servo for radial tracking of the tracks. The rotational frequency of the disk shall be as specified in 9.5. The stationary part of the motor is assumed to be motionless (no external disturbances). The measurement shall be made using a servo with the transfer function

$$H_s(i\omega) = \frac{1}{3} \times \left(\frac{\omega_0}{i\omega}\right)^2 \times \frac{1+\frac{3i\omega}{\omega_0}}{1+\frac{i\omega}{3\omega_0}}$$

where $\omega = 2\pi f$, $\omega_0/2\pi$ = 3 400 Hz, $i = \sqrt{-1}$

or any other servo with $|1+H|$ within 20 % of $|1+H_s|$ in the bandwidth of 50 Hz to 170 kHz. Thus, the disk shall not require a radial acceleration of more than 6,1 m/s^2 at low frequencies from the servo motor of the Reference Servo.

11.4.9 Tilt

The tilt is the angle which the normal to the entrance surface, averaged over an area of 1 mm in diameter, makes with the normal to plane P. It shall not exceed

Radial tilt	4,8 mrad
Tangential tilt	1,5 mrad
Variation of combined tilt in one rotation	3,0 mrad peak-to-peak

in the Information Zone.

11.5 Optical Characteristics

11.5.1 Index of refraction

The index of refraction of the substrate in the Information Zone shall be within the range from 1,46 to 1,60.

--`,,`,`-`-`,,`,,`,`,,`---
© ISO/IEC 2005 – All rights reserved
Copyright International Organization for Standardization
Reproduced by IHS under license with ISO
No reproduction or networking permitted without license from IHS
Not for Resale

11.5.2 Thickness of the substrate

The thickness of the substrate, from the entrance surface to the recording layer, in the Information Zone shall be

$$0{,}5093 \text{ x } \frac{n^3}{n^2-1} \text{ x } \frac{n^2+0{,}2650}{n^2+0{,}5929} \text{ mm} \pm 0{,}05 \text{ mm}$$

where n is the index of refraction.

11.5.3 Birefringence

The effect of the birefringence of the substrate is included in the measurement of the imbalance of the signals in Channel 2 of the Reference Drive (see 25.2).

11.5.4 Vertical Birefringence

The principal vertical birefringence value shall be contained as follows:

$$0 \leq \left| \text{Np - Nz} \right| \leq 50 \times 1^{-6}$$

where Np is the index of refraction along any direction in the plane of the disk and Nz is the index of refraction normal to the plane of the disk (see Annex S).

11.5.5 Reflectance

11.5.5.1 General

The reflectance R is the value of the reflectance on-land of an unrecorded, grooved area of the Data Zone of the disk measured through the substrate and does not include the reflectance of the entrance surface.

The nominal value R of the reflectance shall be specified by the manufacturer in byte 3 and byte 19 of the Control Tracks (see Annex E).

11.5.5.2 Measured Value

The measured value R_m of the reflectance shall be measured under the conditions a) to f) of 9.2 and those of 20.2.2 using the split photo detector $(I_1+I_2)_{OL}$.

Measurements shall be made in the Data Zone in any track without embossed data fields.

11.5.5.3 Requirement

The value of R at the standard wavelength specified in 9.2 shall lie within the range of 0,15 to 0,30 (see Annex L).

At any point in the Data Zone, the value R_m shall be equal to R $(1 \pm 0{,}13)$ and lie within the allowed range.

This requirement specifies the acceptable range for R_m for all disks with the same value of R.

Additionally, the variation of R_m shall meet the requirement

$$\frac{R_{m_{max}} - R_{m_{min}}}{R_{m_{max}} + R_{m_{min}}} \leq 0{,}13$$

© ISO/IEC 2005 All rights reserved

Copyright International Organization for Standardization
Reproduced by IHS under license with ISO
No reproduction or networking permitted without license from IHS
Not for Resale

Where $R_{m_{max}}$ is the maximum value of measured reflectance in the Data Zone

$R_{m_{min}}$ is the minimum value of measured reflectance in the Data Zone.

12 Interface between cartridge and drive

12.1 Clamping method

When the cartridge is inserted into the drive, the shutter of the case is opened and the drive spindle engages the disk. The disk is held against the spindle by an axial clamping force, provided by the magnetizable material in the hub (see Annex M) and the magnets in the spindle. The radial positioning of the disk is provided by the centring of the axis of the spindle in the centre hole of the hub. A cup-shaped turntable of the spindle shall support the disk in its clamping zone, determining the axial position of the disk in the case.

12.2 Clamping force

The clamping force exerted by the spindle on the hub shall not exceed 5 N.

12.3 Capture cylinder (see Figure 14)

The capture cylinder is defined as the volume in which the spindle can expect the centre of the hole in the hub to be, just prior to capture, and with the cartridge constrained as in 10.4.4. The centre of the hole is defined as the point on axis A at a distance h_1 below plane P (see 11.3.1 and Figure 13).

The size of the cylinder defines the permissible play of the disk inside its cavity in the case. The cylinder is referred to perfectly located and perfectly sized alignment and location pins in the drive; it includes the tolerances of those dimensions of the case and the disk which are between the two pins mentioned and the centre of the hub.

The bottom of the cylinder is parallel to plane Z, and shall be located a distance

L_{57} = 0,7 mm min.

above plane Z. The top of the cylinder is located a distance

L_{58} = 2,3 mm max.

above plane Z. The radius of the cylinder shall be

R_{17} = 1,4 mm max.

and its centre shall be given by the nominal values of L_{29} and L_{32} in the drive.

12.4 Disk position in operating condition (see Figure 14)

When the disk is in the operating condition within the drive, the position of plane P of the disk shall be

L_{59} = 2,4 mm ± 0,1 mm

above plane Z of the case, and the axis of rotation shall be within a circle with a radius

R_{18} = 0,1 mm max.

and a centre given by the nominal values of L_{29} and L_{32}.

© ISO/IEC 2005 – All rights reserved
Copyright International Organization for Standardization
Reproduced by IHS under license with ISO
No reproduction or networking permitted without license from IHS
Not for Resale

The torque to be exerted on the disk in the operating condition in order to maintain the rotational frequency specified in 9.5 shall not exceed 0,01 N•m.

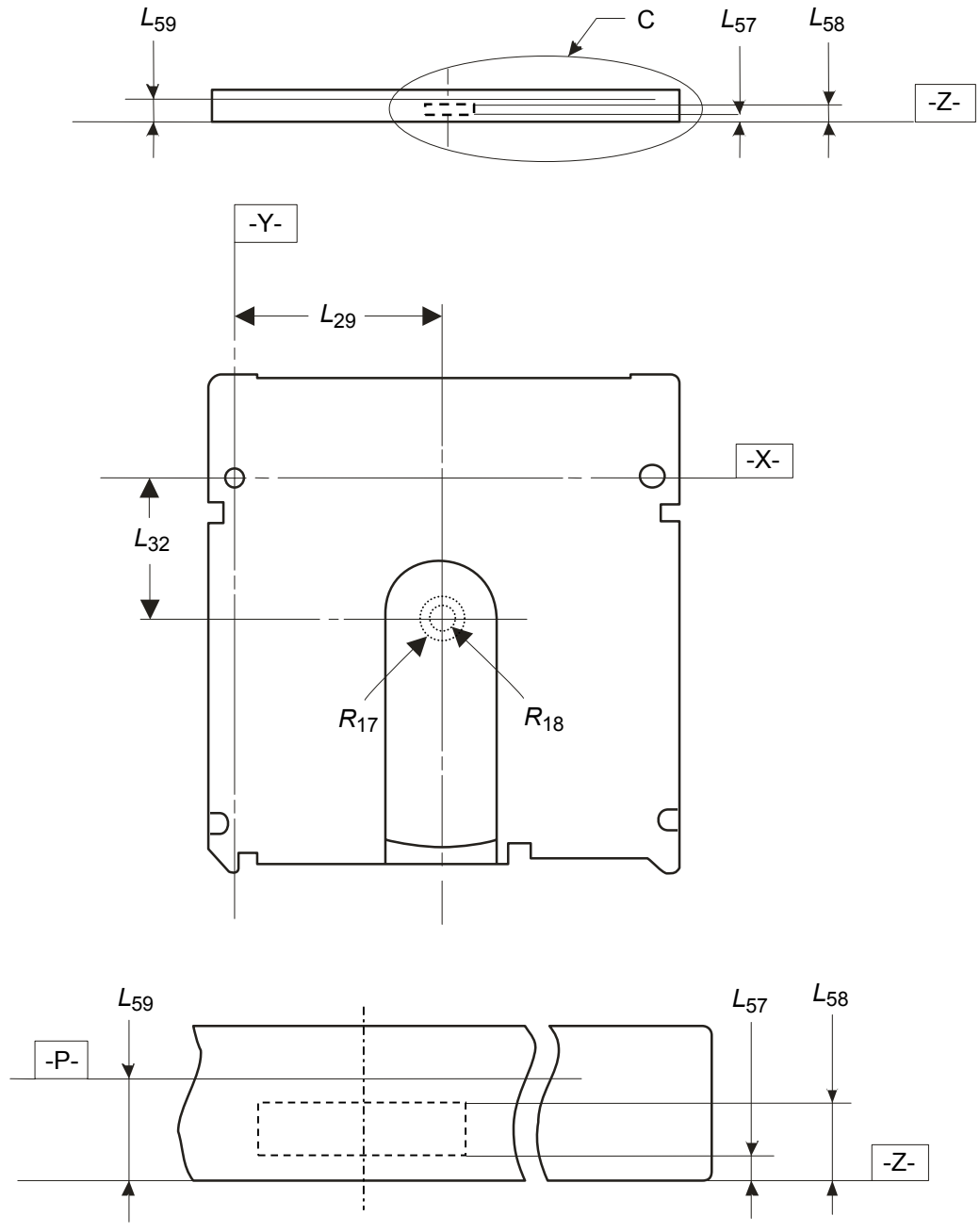

Figure 14 – Capture cylinder and disk position in operating condition.

© ISO/IEC 2005 All rights reserved

Copyright International Organization for Standardization
Reproduced by IHS under license with ISO
No reproduction or networking permitted without license from IHS
Not for Resale

Section 3 - Format of information

13 Geometry of physical tracks

13.1 Physical track shape

The Information Zone shall contain tracks intended for the Continuous Servo tracking method.

This International Standard distinguishes between physical and logical tracks. A logical track is a part of a physical track containing a defined number of consecutive sectors (see 14.2).

Physical tracks consist of adjacent land-groove pairs. Both lands and grooves form continuous 360 ° spirals except for preformatted Header areas, where pre-recorded marks are formed in non-grooved areas. A groove is a trench-like feature, the bottom of which is located nearer to the entrance surface than the land. Within each land-groove pair, there are two Recording Tracks, one is located on the centreline of the land (Land Track), the other is located on the centreline of the groove (Groove Track). The shape of the groove is determined by the requirements in Clause 21.

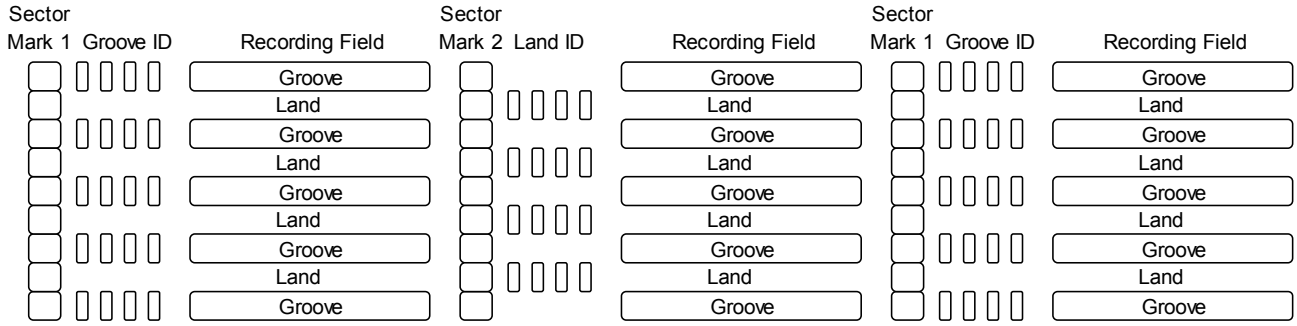

Figure 15a – Track and Header Geometry in Data Zone

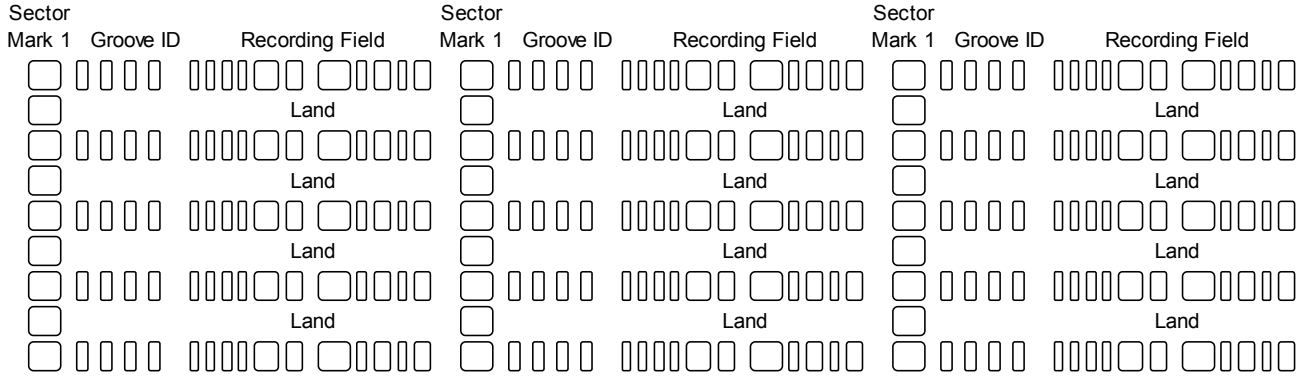

Figure 15b – Track and Header Geometry in Control Data Zone

Copyright International Organization for Standardization
Reproduced by IHS under license with ISO
No reproduction or networking permitted without license from IHS
© ISO/IEC 2005 – All rights reserved
Not for Resale

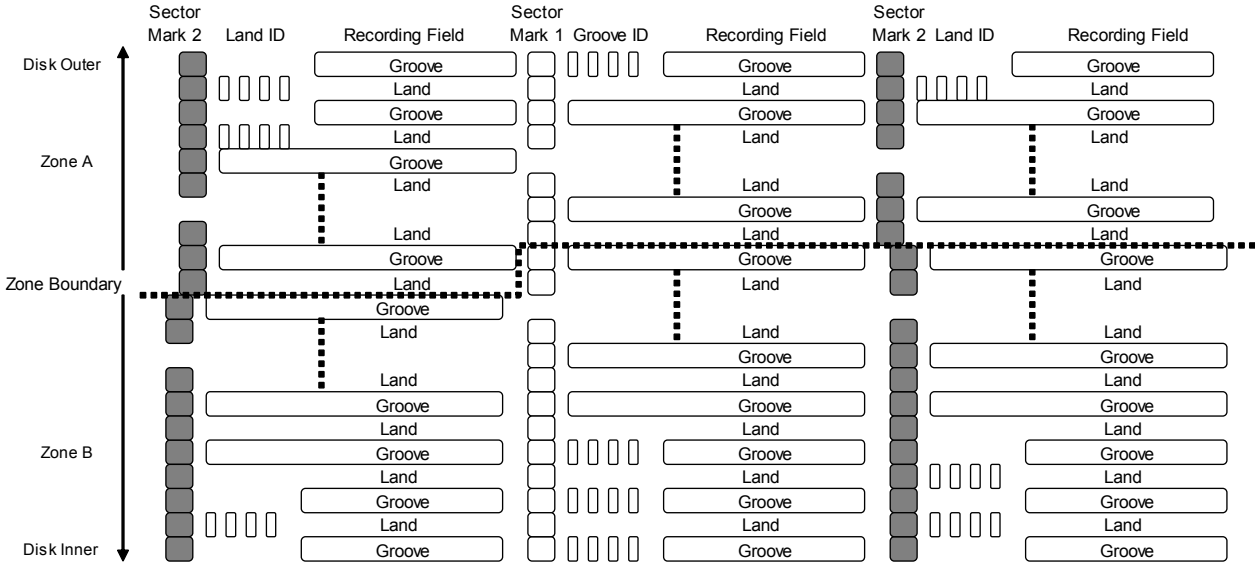

Figure 15c – Track Details at Zone Boundary

Figure 15 – Land and Groove Recording Track Geometry

13.2 Direction of track spiral

The disk shall rotate counter-clockwise as viewed from the optical head. The track shall spiral inward from the outer diameter to the inner diameter.

13.3 Physical track pitch

The physical track pitch is the distance between adjacent physical track centrelines, measured in a radial direction. It shall be 0,67 µm ± 0,05 µm.

The width of a band of 10 000 physical tracks shall be 6,70 mm ± 0,10 mm.

14 Track format

Embossed Channel bit length shall be triple of MO Channel bit length within a band.

14.1 Logical Track number

Each logical track shall be identified by a track number. Track 0 shall be the first track of the Data Zone. It shall be located at a radius of 41,80 mm ± 0,10 mm. A pair of adjacent land and groove tracks has the same logical track number.

The track numbers of tracks located at radii larger than that of track 0 shall be increased by 1 for each track. The track numbers of tracks located at radii smaller than that of track 0 shall be negative, and decrease by 1 for each track. Their value is given in the ID field in TWO's complement, thus track - 1 is indicated by (FFFF).

14.2 Logical Track layout

On each logical track there shall be 17 sectors.

© ISO/IEC 2005 All rights reserved

Copyright International Organization for Standardization
Reproduced by IHS under license with ISO
No reproduction or networking permitted without license from IHS
Not for Resale

Sectors in Control Zone shall comprise 922 bytes. All other sectors shall comprise 2 628 bytes. A byte is represented on the disk by 12 Channel bits.

The sectors shall be equally spaced over a track in such a way that the distance between the first Channel bit of a sector and the first Channel bit of the next sector shall be 11 064 Channel bits ± 5 Channel bits in Control Zone and 31 536 Channel bits ± 5 Channel bits in other zone.

14.3 Clock frequencies and periods

The nominal clock frequency and period for each data band at the rotational speed of 50 Hz is shown in Table 2 below. The clock frequency of Header is one third of Gap and recording field except Control Zone. These values are for reference only. The absolute frequency and period shall be adjusted so that there are the correct number of Channel bits in one physical track by the formula below.

(50 - 2 x Data Band Number) x 12 x 2 628

where 12 is the number of Channel bits per byte and 2 628 is the number of bytes per sector.

Table 2 – Nominal Clock Frequencies and Periods

Format		Header		Gap and recording field	
Zone or Band		Clock Frequency MHz	Period T ns	Clock Frequency MHz	Period T ns
Lead-in Zone	Buffer Zone	27,66	36,15	82,98	12,05
	Test Zone	27,66	36,15	82,98	12,05
Data Zone	Band 0	27,66	36,15	82,98	12,05
	Band 1	26,55	37,66	79,66	12,55
	Band 2	25,45	39,30	76,34	13,10
	Band 3	24,34	41,08	73,02	13,69
	Band 4	23,23	43,04	69,70	14,35
	Band 5	22,13	45,19	66,38	15,06
	Band 6	21,02	47,57	63,06	15,86
	Band 7	19,92	50,21	59,75	16,74
	Band 8	18,81	53,17	56,43	17,72
	Band 9	17,70	56,49	53,11	18,83
	Band 10	16,60	60,26	49,79	20,09
	Band 11	15,49	64,56	46,47	21,52
Control Track Zone		15,49	64,56	15,49	64,56
Lead-out Zone	Test Zone	15,49	64,56	46,47	21,52
	Buffer Zone	15,49	64,56	46,47	21,52

14.4 Radial alignment

The Headers of the sectors shall be radially aligned in such a way that the angular distance between the first Channel bit of sectors in adjacent tracks within each data band, Lead-in Zone or Lead-out Zone shall be less than ± 5 Channel bits.

© ISO/IEC 2005 – All rights reserved
Copyright International Organization for Standardization
Reproduced by IHS under license with ISO
No reproduction or networking permitted without license from IHS
Not for Resale

14.5 Sector number

The sectors of a logical track shall be numbered consecutively starting from 0 to 16.

15 Sector format

15.1 Sector layout

A sector shall comprise a Header, a Gap and a Recording field in which 2 048 user data bytes can be recorded. The Header of each sector shall be embossed. The Recording field can be empty, user-written or embossed. The length of the sector shall be 922 bytes in Control Zone and 2 628 bytes in other zone. Tolerances allowed by 14.2 are taken up by the Buffer, i.e. the last field of the sector. The length of the Header field is 69 bytes, the length of the Gap is 8 bytes for Control Zone and 20 bytes for Other Zone.

The layout of a sector is shown in Figure 16. The numbers indicate the length of field in bytes.

SM1	VFO_1	AM	ID_1	VFO_2	AM	ID_2	PA
8	31	1	5	16	1	5	2

Pattern G1 (69 bytes)

SM2	Space
8	61

Pattern G2 (69 bytes)

(a) Pre-formatted Header pattern for Groove tracks

SM2	VFO_1	AM	ID_1	VFO_2	AM	ID_2	PA
8	31	1	5	16	1	5	2

Pattern L1 (69 bytes)

SM1	Space
8	61

Pattern L2 (69 bytes)

(b) Pre-formatted Header pattern for Land tracks

		← Recording field →					
Pre-Formatted header	Gap	VFO_3	Sync	Data field	PA	VLP	Buffer
69	8	27	4	658	1	125	30

(c) Sector format for Control Zone (922 bytes)

		← Recording field →				
Pre-Formatted header	Gap	VFO_3	Sync	Data field	PA	Buffer
69	20	47	4	2 458	2	28

(d) Sector format for Data Zone and Lead-in / Lead-out Zone (2 628 bytes)

Figure 16 – Sector format

--`,,`,,`-`-`,,`,,`,`,,`---

© ISO/IEC 2005 All rights reserved
Copyright International Organization for Standardization
Reproduced by IHS under license with ISO
No reproduction or networking permitted without license from IHS
Not for Resale

15.2 Sector Mark (SM)

The Sector Mark shall have a length of 96 Channel bits and shall consist of pre-recorded, continuous, long marks of different Channel bits length followed by a lead-in to the VFO1 field. This pattern does not exist in data.

There are two types of Sector Marks to identify sector as shown in Figure 17. SM1 shall start from 6T mark, on the other hand SM2 shall start from 6T space, where T corresponds to the time length of one Channel bit for Header. The signal obtained from a mark is less than a signal obtained from space. The layout of pre-formatted Header pattern for the groove and the land tracks shall be as shown in Figure 16a and 16b.

The pre-formatted Header pattern in the Control zone shall be pattern G1 as shown in Figure 16(a) and (c). The Land area corresponds to this zone shall be pattern L2.

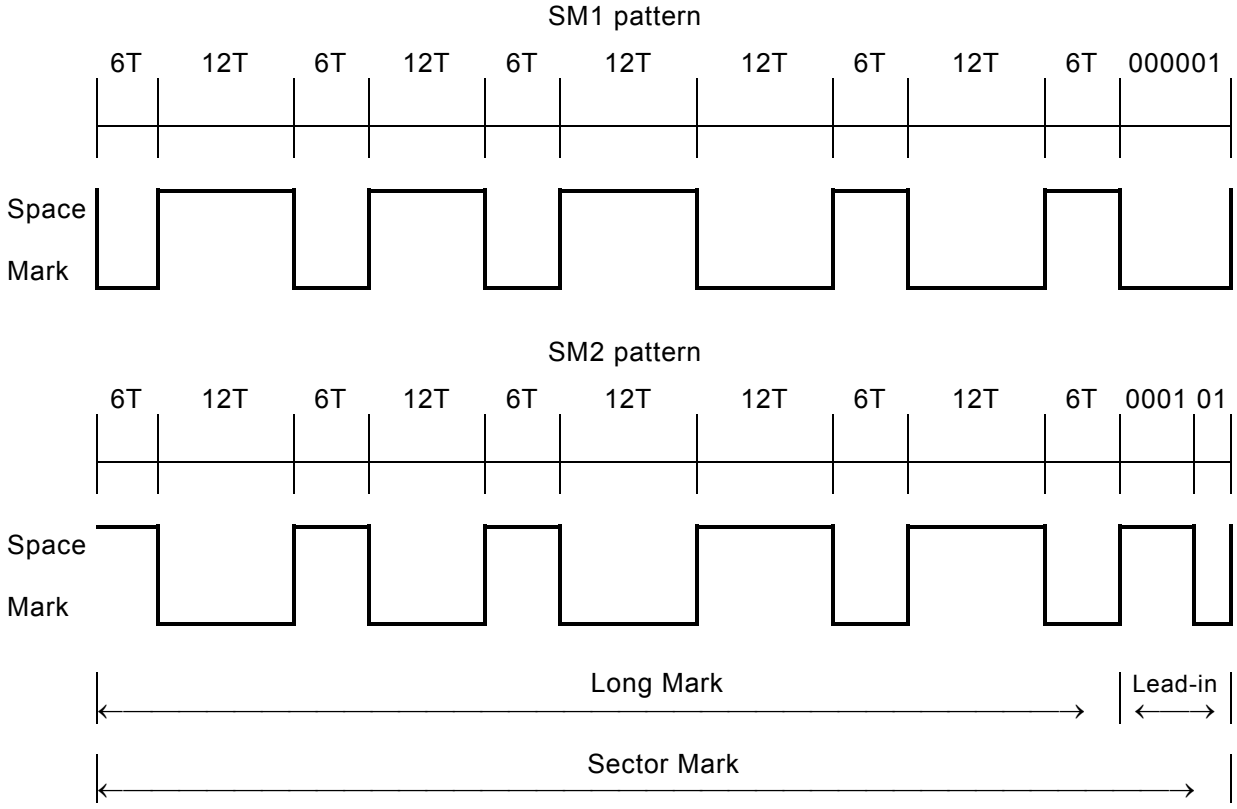

Figure 17 – Pattern of the Sector Mark

15.3 VFO fields

There shall be three fields designated VFO_1, VFO_2 and VFO_3 to synchronize the VFO.

The continuous Channel bit pattern for VFO fields shall be following as shown in Figure 18:

Copyright International Organization for Standardization
Reproduced by IHS under license with ISO
No reproduction or networking permitted without license from IHS
© ISO/IEC 2005 – All rights reserved
Not for Resale

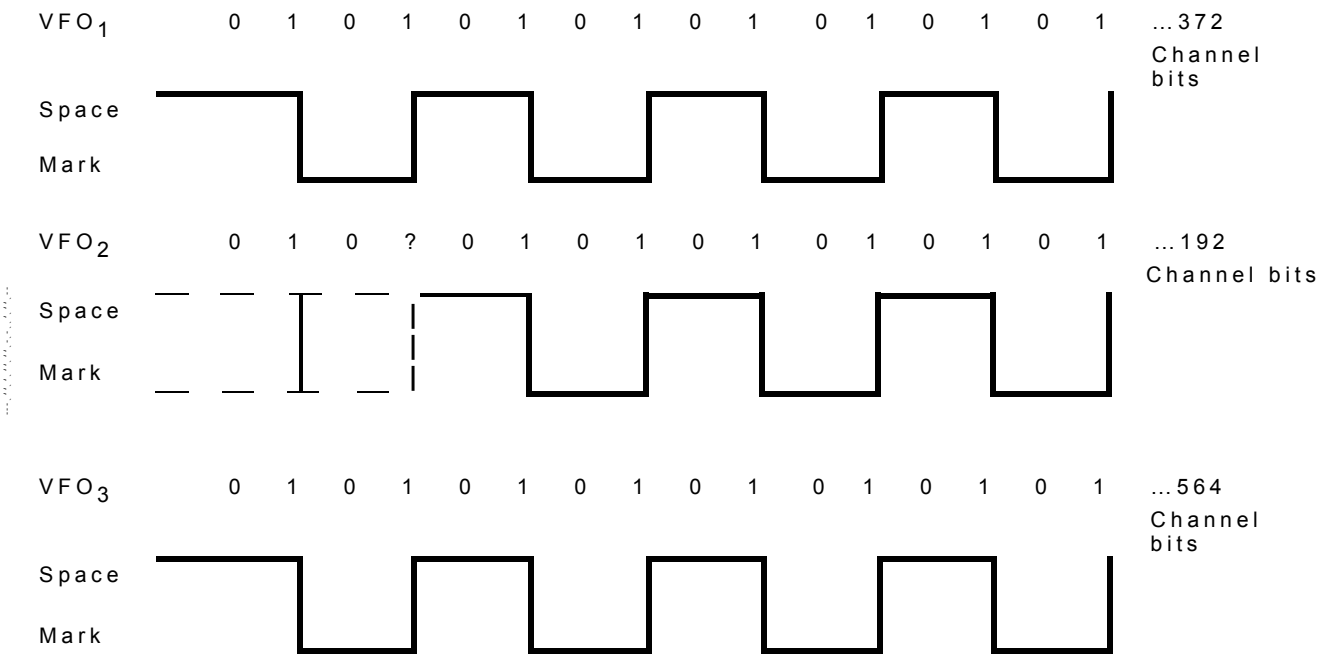

Figure 18 – Detail of Channel bit pattern for VFO fields

The starting bits of VFO_2 is ZERO ONE ZERO. It shall be considered as encoded from input bits ONE ZERO.

The fourth bit (denoted by ?) shall be set to either a ONE or ZERO so as to produce the mark-space pattern as defined. The objective is to set the 9T space between the trailing edge of the last mark in the VFO and the leading edge of the first mark of the following Address Mark. This value shall be such to produce the same pattern thereafter as the other VFO fields and to end this field in the trailing edge of an embossed mark.

The start of the VFO_3 field shall be not more than 6 Channel bits from the ideal position given in this International Standard. This tolerance allows for timing inaccuracies of the optical drive controller and will be compensated for by the Gap preceding the VFO_3 field and by the Buffer field at the end of the sector.

15.4 Address Mark (AM)

This field is intended to give to the drive byte synchronization for the following ID field.

The AM is a Channel bit pattern not used in RLL (1,7) and is a run-length violation for RLL (1,7). This 12-bit Channel bit pattern shall be:

0000 0000 10x0

where the value x shall be determined as follows:

if the first bits of the following ID field are set to ZERO ZERO, x = ONE

if the first bits of the following ID field are not set to ZERO ZERO, x = ZERO.

Since the last bit of the preceding VFO field is set to ONE, and a bit set to ONE appears in the AM after 8 other Channel bits, this 10-bit sequence constitutes the detection pattern.

15.5 ID fields

The two ID fields shall each contain the address of the sector, i.e. the track number and the sector number, and CRC bytes.

© ISO/IEC 2005 All rights reserved

Copyright International Organization for Standardization
Reproduced by IHS under license with ISO
No reproduction or networking permitted without license from IHS
Not for Resale

An ID field shall consist of five bytes.

1st byte

This byte shall specify the most significant byte of the Logical Track Number.

2nd byte

This byte shall specify the least significant byte of the Logical Track Number.

3rd byte

bit 7	shall specify the ID number
	when set to ZERO shall mean the ID1 field,
	when set to ONE shall mean the ID2 field.
bits 6 to 5	shall specify the identification of Groove track and Land track
	when set to ZERO ZERO shall mean Groove track,
	when set to ONE ZERO shall mean Land track.
bits 4 to 0	shall specify the sector number in binary notation.

4th and 5th bytes

These two bytes shall specify a 16-bit CRC computed over the first three bytes of this field (see Annex C).

When the first two data bits of the ID field are to be encoded using Table 3, the last Channel bit from the AM is used as input to the encoder.

When the first three Channel bits of the ID field are to be decoded using Table 4, the last two bits from the AM are used as input to the decoder.

15.6 Postambles (PA)

This field shall follow the ID2 and Data field and be equal in length to 12 Channel bits as shown in Figure 19.

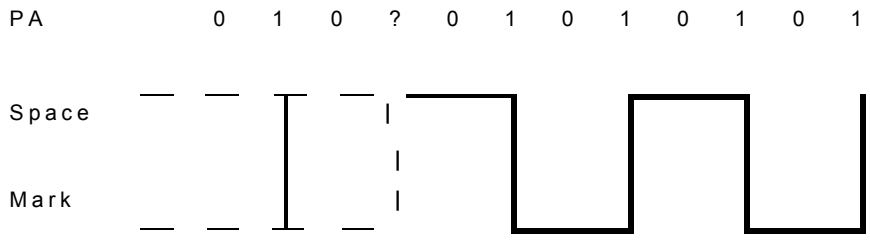

Figure 19 – Bit decision in Postambles

The starting bits of the PA is 010. It shall be considered as encoded from input bits 10.

The fourth bit (denoted by ?) shall be set so as to end this field in the trailing edge of a mark. Due to the use of the RLL (1,7) encoding scheme (see Clause 16), the framing of the last byte of the CRC in the ID2 field and the ECC in the Data field is uncertain within a few bit times. The Postamble allows the last byte of the CRC and the ECC in the Data field to achieve closure and permits the each field to end always in a predictable manner. This is necessary in order to locate the following field in a consistent manner.

© ISO/IEC 2005 – All rights reserved
Copyright International Organization for Standardization
Reproduced by IHS under license with ISO
No reproduction or networking permitted without license from IHS
Not for Resale

15.7 Gap

The Gap shall be a field with a nominal length of 240 Channel bits. Its content is not specified and shall be ignored on interchange. For embossed sectors in the Control Zone the Gap shall be embossed with a continuous 2T pattern for Header. It is the first field of the Recording field, and gives the drive some time for processing after it has finished reading the header and before it has to erase, write or read the VFO_3 field.

15.8 Sync

The Sync field is intended to allow the drive to obtain byte synchronization for the following Data field.

This field shall have a length equal to 48 Channel bits. It shall be recorded with the Channel bit pattern:

0100 0010 0100 0010 0010 0010 0100 0100 1000 0010 0100 10x0

where the bit x shall be set as follows:

— if the first data bits of the following Data field are set to ZERO ZERO, x is set to ONE;

— if the first data bits of the following Data field are not set to ZERO ZERO, x is set to ZERO.

15.9 Data field

The Data field is intended for recording user data.

This field shall consist of

– 2 458 bytes comprising
  2 048 user bytes
  402 bytes for CRC, ECC and Resync
  8 bytes set to (FF)

This field in Control Zone shall consist of

– 658 bytes comprising
  512 user bytes
  142 bytes for CRC, ECC and Resync
  4 bytes set to (FF)

The disposition of these bytes in the Data field is specified in Annex D.

When the first two data bits of the Data field are to be encoded using Table 3, the last Channel bit from the Sync field is used as input to the encoder.

When the first three Channel bits of the Data field are to be decoded using Table 4, the last two Channel bits from the Sync field is used as input to the decoder.

15.9.1 User data bytes

The user data bytes are at the disposal of the user for recording information.

15.9.2 CRC and ECC bytes

The Cyclic Redundancy Check bytes and Error Correction Code bytes are used by the error detection and correction system to rectify erroneous data. The ECC is a Reed-Solomon code of degree 16. The bytes shall be as specified in Annex D.

© ISO/IEC 2005 All rights reserved

Copyright International Organization for Standardization
Reproduced by IHS under license with ISO
No reproduction or networking permitted without license from IHS
Not for Resale

15.9.3 Resync bytes

The Resync bytes enable a drive to regain byte synchronization after a large defect in the data field.

Annex F specifies the Resync bytes and the criteria for deciding which of the two possible bit patterns is to be used.

The Resync fields shall be inserted between the bytes of the Data field as specified in Annex D.

15.10 VCO lock pattern field (VLP)

VCO lock pattern shall exist only in the control zone and contain 1 500 Channel bits. It shall be continuous 3T pattern as shown in Figure 20. It shall maintain the continuity of PLL synchronization.

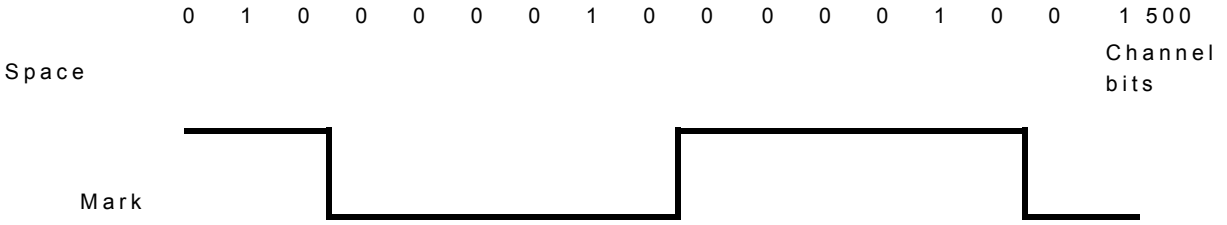

Figure 20 – Detail of Channel bit pattern for VLP

15.11 Buffer field

The Buffer field shall have a nominal length of 360 Channel bits in Control Zone and 336 Channel bits in other zone. This field shall not contain any data and is needed to allow for drive motor speed tolerances and other electrical and mechanical tolerances.

This field is needed for four reasons. First, the tolerance on the header-to-header distance as specified in 14.2. Second, the tolerance in the start of the VFO_3 field as specified in 15.3. Third, the actual length of the written data, as determined by the runout of the track and the speed variations of the disk during writing of the data. Fourth, to ensure that all data written previously, the length of which is subject to the above tolerances, has been erased.

16 Recording code

The 8-bit bytes in the two ID fields and in the Data field shall be encoded to Channel bits on the disk according to Table 3 and Annex D. Channel bits in these fields shall be decoded to information bits according to Table 4 and Annex D. All other fields in a sector have already been defined in terms of Channel bits. Write pulses shall produce marks in a manner such that the edge between a mark and a space, or a space and a mark corresponds to a Channel bit that is a ONE.

The recording code used to record all data in the formatted areas of the disk shall be the run-length limited code known as RLL (1,7) as defined in Tables 3 and 4.

© ISO/IEC 2005 – All rights reserved
Copyright International Organization for Standardization
Reproduced by IHS under license with ISO
No reproduction or networking permitted without license from IHS
Not for Resale

Table 3 – Encoding of input bits to Channel bits

Preceding Channel bit	Current input bits	Following input bits	Channel bits RLL (1,7)
0 or 1	00	00 or 01	001
0	00	10 or 11	000
1	00	10 or 11	010
0	01	00 or 01	001
0	01	10 or 11	000
1	01	00	010
1	01	01,10 or 11	000
0	10	00 or 01	101
0	10	10 or 11	010
0	11	00	010
0	11	01,10 or 11	100

The encoding shall start at the first bit of the first byte of the field to be encoded. After a Resync field the RLL (1,7) coding shall start again with the last two input bits of the Resync bytes.

Table 4 – Decoding of Channel bits to information bits

Preceding Channel bits	Current Channel bits	Following Channel bits	Decoded information bits
10	000	00, 01 or 10	00
00 or 01	000	00, 01 or 10	01
00	001	00 or 01	01
01 or 10	001	00 or 01	00
00 or 10	010	00	11
00 or 10	010	01 or 10	10
01	010	00	01
01	010	01 or 10	00
00 or 10	100	00, 01 or 10	11
00 or 10	101	00 or 01	10

17 Format of the Information Zone

17.1 General description of the Information Zone

The Information Zone shall contain all information on the disk relevant for data interchange. The information comprises embossed tracking provisions, embossed headers, embossed data and, possibly, user-written data. In this Clause, the term 'data' is reserved for the content of the data field of a sector, which, in general, is transferred to the host. This Clause defines the layout of the information; the characteristics of signals obtained from this information are specified in Section 4.

17.2 Division of the Information Zone

The Information Zone is divided into four parts: a Lead-in Zone, a Data Zone, a Control Track Zone and a Lead-out Zone. The Data Zone is intended for the recording of user data. The Lead-in and Lead-out Zones contain zones for performing tests by the manufacturer or drive. The Control track Zone also contains control information for the drive.

The division of the Information Zone shall be as given in Tables 5a and 5b. The tolerance on the outer radius of the Data Zone is specified in 14.1; the tolerances on other radii are determined by the tolerance on the track pitch as specified in 13.3.

© ISO/IEC 2005 All rights reserved

Copyright International Organization for Standardization
Reproduced by IHS under license with ISO
No reproduction or networking permitted without license from IHS
Not for Resale

17.2.1 Buffer Zones

This Zone is intended to enable a drive to lock its axial tracking (focusing) servo. It shall have either a flat reflective layer, or such a layer with uninterrupted grooves and lands over complete tracks as specified in Clause 21, or such tracks with embossed Headers or any combination of the above.

17.2.2 Test Zones

There shall be an Inner Test Zone and an Outer Test Zone. The Test Zones are areas with groove and land tracks, Headers, Gap and Recording fields.

The Test Zone for drives is intended for tests to enable a drive to set its write power. The tracks used for testing should be chosen from the Test Zone for drives in a random way, so as to ensure a gradual degradation of the entire Test Zone due to use. Then each track in this zone will remain representative for the characteristics of tracks in the Data Zone of the disk.

The Test Zone for the manufacturer is intended for quality tests by the media manufacturer. The Test Zone for drives shall not be used for such tests, as they can cause serious degradation of the Test Zone.

© ISO/IEC 2005 – All rights reserved
Copyright International Organization for Standardization
Reproduced by IHS under license with ISO
No reproduction or networking permitted without license from IHS
Not for Resale

Table 5a – Layout of the Information Zone of the Groove Track

Zone or Band	Nominal Radius (mm) Start	End	Number of Logical Tracks	Logical Track Number Start	End	Number of Physical Tracks
Lead-in Zone						
Buffer Zone	42,506		1 456	-1 550		527
Outer Test Zone						
For manufacturers	41,843		32	-94		
For drives	41,828		32	-62		
Buffer zone	41,814		30	-30		
Data Zone						
Band 0	41,80		3 550	0		1 207
Band 1	40,18		3 408	3 550		1 207
Band 2	38,57		3 266	6 958		1 207
Band 3	36,95		3 124	10 224		1 207
Band 4	35,33		2 982	13 348		1 207
Band 5	33,71		2 840	16 330		1 207
Band 6	32,10		2 698	19 170		1 207
Band 7	30,48		2 556	21 868		1 207
Band 8	28,86		2 414	24 424		1 207
Band 9	27,24		2 272	26 838		1 207
Band 10	25,63		2 130	29 110		1 207
Band 11	24,01		1 232	31 240		748
Control Track Zone						102
Control Data Zone	23,007		168	32 472		
Lead-out Zone						340
Buffer Zone	22,870		17	32 640		
Inner Test Zone						
for drives	22,856		32	32 657		
for manufacturers	22,830		32	32 689		
Buffer Zone	22,804	22,414	479	32 721	33 199	

© ISO/IEC 2005 All rights reserved
Copyright International Organization for Standardization
Reproduced by IHS under license with ISO
No reproduction or networking permitted without license from IHS
Not for Resale

Table 5b – Layout of the Information Zone of the Land Track

Zone or Band	Nominal Radius (mm) Start	End	Number of Logical Tracks	Track Number Start	End	Number of Physical Tracks
Lead-in Zone						
Buffer Zone	42,506		1 456	-1 550		
Outer Test Zone						
For manufacturers	41,843		32	-94		527
For drives	41,828		32	-62		
Buffer zone	41,814		30	-30		
Data Zone						
Band 0	41,80		3 550	0		1 207
Band 1	40,18		3 408	3 550		1 207
Band 2	38,57		3 266	6 958		1 207
Band 3	36,95		3 124	10 224		1 207
Band 4	35,33		2 982	13 348		1 207
Band 5	33,71		2 840	16 330		1 207
Band 6	32,10		2 698	19 170		1 207
Band 7	30,48		2 556	21 868		1 207
Band 8	28,86		2 414	24 424		1 207
Band 9	27,24		2 272	26 838		1 207
Band 10	25,63		2 130	29 110		1 207
Band 11	24,01		1 232	31 240		748
Control Track Zone						
Reserved Zone	23,007		168	32 472		102
Lead-out Zone						
Buffer Zone	22,870		17	32 640		
Inner Test Zone						340
for drives	22,856		32	32 657		
for manufacturers	22,830		32	32 689		
Buffer Zone	22,804	22,414	479	32 721	33 199	

NOTE 1 The radii of a zone in the Tables 5a and 5b are the nominal values of the radius of the centre of the first track and of the radius of the centre of the last track of the zone.

NOTE 2 The Reserved Zone in Table 5b is a counter part for groove track, track number of this zone is virtually addressed.

© ISO/IEC 2005 – All rights reserved
Copyright International Organization for Standardization
Reproduced by IHS under license with ISO
No reproduction or networking permitted without license from IHS
Not for Resale

17.2.3 Control Track Zone

The Control Zone shall contain 168 tracks with embossed sector groove formatted according to Clause 15.

The Data fields of all sectors in the Control Zone shall be identical, and contain embossed Control data for the drive. The Control data in a Data field is specified in Annex E.

17.2.4 Data Zone

The Data Zone shall contain grooves, lands and embossed Headers. The Recording fields can be user-written, in the format of Clause 15. The layout of the Data Zone is specified in Clause 18.

The Data Zone shall be divided into 12 bands. Each band shall consist of 1 207 and 748 physical tracks and is further divided into logical tracks as shown in Tables 5a and 5b. The number of logical tracks per band consequently decreases from band to band moving from the outer radius to the inner radius. Within any band, the angular recording density shall be constant. Each physical track in the band begins and ends on the same radial line.

The hierarchy is thus:

17 sectors = 1 logical track

50(OD) to 28(ID) logical tracks = 17 physical tracks

1 207 physical tracks = 1 band (Band 0 to Band 10)

748 physical tracks = 1 band (Band 11)

12 bands = the Data Zone

The Data Zone shall start with track 0 and end with track 32 471.

18 Format of the Data Zone

The Data Zone shall contain four Defect Management Areas (DMAs), two at the beginning of the zone and two at the end of the band 0. Data Zone shall be interrupted by the Buffer tracks at each Band boundary as specified in 18.1.

The layout of the Data Zone and adjacent zones is shown in Table 6.

18.1 Buffer tracks and Test tracks in the Data Zone

Tracks at the beginning of each band except band 0 shall be Buffer tracks and tracks at the end of each band shall be Buffer, Test and Buffer tracks respectively (see Table 7).

A part of the Buffer tracks at the beginning and the ending of each band has Sector Mark only, however track number is allocated. The Buffer and Test tracks shall not be used for the user data.

18.2 Defect Management Areas (DMAs)

The four Defect Management Areas contain information on the structure of the Data Zone and on the defect management. The length of each DMA shall be 41 sectors. Two of the DMAs, DMA1 and DMA2, shall be located the outer most of the Band 0; two others, DMA3 and DMA4, shall be located the inner of the Band 0. The boundaries of the DMAs are indicated in Table 8. The contents of the groups of the reserved sectors in Table 8 are not specified by this Standard, and shall be ignored in interchange.

Each DMA shall contain a Disk Definition Structure (DDS), a Primary Defect List (PDL), and a Secondary Defect List (SDL). The contents of the four PDLs shall be identical and the contents of the four SDLs shall be identical. The only differences between the contents of the four DDSs shall be the pointers to each associated PDL and SDL.

--`,,`,`-`-`,,`,,`,`,,`---

© ISO/IEC 2005 All rights reserved

Copyright International Organization for Standardization
Reproduced by IHS under license with ISO
No reproduction or networking permitted without license from IHS
Not for Resale

After initialization of the disk, each DMA shall have the following content:

- The first DMA sector shall contain the DDS.
- The second DMA sector shall be the first sector of the PDL.
- The SDL shall be located immediately after the PDL.

The lengths of the PDL and SDL are determined by the number of entries in each. The content of the DMA sectors following the SDL is not specified and shall be ignored in interchange.

The contents of the DDS are specified in 18.3; those of the PDL and SDL are specified in 19.5 and 19.6.

Table 6 – Layout of the Lead-in Zone, Data Zone and Control Track Zone

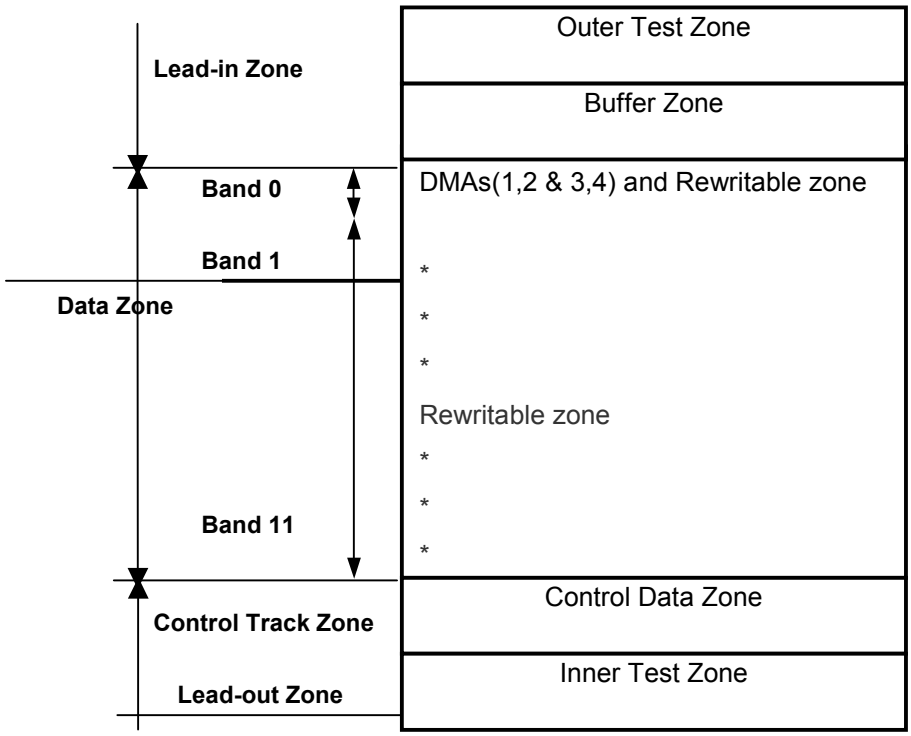

© ISO/IEC 2005 – All rights reserved
Copyright International Organization for Standardization
Reproduced by IHS under license with ISO
No reproduction or networking permitted without license from IHS
Not for Resale

Copyright International Organization for Standardization © ISO/IEC 2005 All rights reserved
Reproduced by IHS under license with ISO
No reproduction or networking permitted without license from IHS
Not for Resale

Table 7a – Usage of Groove Tracks

Band Number	SCTs per Phys Track	Phys Tracks per Band	Logi Tracks per Band	Start Buffer with SM	Start Buffer with Header	DMA1 & DMA2	Reserved	Start Data	Start Spare	DMA3 & DMA4	Start Buffer with Header	Start Test	Start Buffer with Header	Start Buffer with SM	End Track
0	50	1 207	3 550	--	--	0 to 5	6 to 25-	26	3 435	3 460 to 3 465	3 466/00	3 469	3 490/00	3 505/15	3 549
1	48	1 207	3 408	3 550/00	3 592/06			3 608	6 866		6 890/00	6 893	6 914/00	6 929/13	6 957
2	46	1 207	3 266	6 958/00	6 985/01			7 000	10 148		10 172/00	10 175	10 196/00	10 210/08	10 223
3	44	1 207	3 124	10 224/00	10 236/16			10 250	13 275		13 298/00	13 301	13 322/00	13 335/01	13 347
4	42	1 207	2 982	13 348/00	13 360/06			13 374	16 257		16 280/00	16 283	16 304/00	16 317/11	16 329
5	40	1 207	2 840	16 330/00	16 341/13			16 354	19 100		19 122/00	19 125	19 146/00	19 158/04	19 169
6	38	1 207	2 698	19 170/00	19 181/03			19 194	21 798		21 820/00	21 823	21 844/00	21 856/14	21 867
7	36	1 207	2 556	21 868/00	21 878/10			21 890	24 357		24 378/00	24 381	24 402/00	24 413/07	24 423
8	34	1 207	2 414	24 424/00	24 434/00			24 444	26 773		26 794/00	26 797	26 818/00	26 828/00	26 837
9	32	1 207	2 272	26 838/00	26 847/07			26 858	29 046		29 066/00	29 069	29 090/00	29 100/10	29 109
10	30	1 207	2 130	29 110/00	29 118/14			29 128	31 178		31 198/00	31 201	31 222/00	31 231/03	31 239
11	28	748	1 232	31 240/00	31 248/04			31 258	32 420		32 439/00	32 442	32 463/00		32 471

NOTE Expression of “nnn/mm” in buffer tracks means ”logical track number / sector number”.

Copyright International Organization for Standardization
Reproduced by IHS under license with ISO
No reproduction or networking permitted without license from IHS

Table 7b – Usage of Land Tracks

Band Number	SCTs per Phys Track	Phys Tracks per Band	Logi. Tracks per Band	Start Buffer with SM	Start Buffer with Header	Reserved	Start Data	Start Spare	Reserved	Start Buffer with Header	Start Test	Start Buffer with Header	Start Buffer with SM	End Track
0	50	1 207	3 550	0	-	0 to 25-	26	3435	3 460 to 3 465	3 466/00	3 469	3 490/00	3 505/15	3 549
1	48	1 207	3 408	3 550/00	3 592/06		3 608	6 866		6 890/00	6 893	6 914/00	6 929/13	6 957
2	46	1 207	3 266	6 958/00	6 985/01		7 000	10 148		10 172/00	10 175	10 196/00	10 210/08	10 223
3	44	1 207	3 124	10 224/00	10 236/16		10 250	13 275		13 298/00	13 301	13 322/00	13 325/01	13 347
4	42	1 207	2 982	13 348/00	13 360/06		13 374	16 257		16 280/00	16 283	16 304/00	16 317/11	16 329
5	40	1 207	2 840	16 330/00	16 341/13		16 354	19 100		19 122/00	19 125	19 146/00	19 158/04	19 169
6	38	1 207	2 698	19 170/00	19 181/03		19 194	21 798		21 820/00	21 823	21 844/00	21 856/14	21 867
7	36	1 207	2 556	21 868/00	21 878/10		21 890	24 357		24 378/00	24 381	24 402/00	24 413/07	24 423
8	34	1 207	2 414	24 424/00	24 434/00		24 444	26 773		26 794/00	26 797	26 818/00	26 828/00	26 837
9	32	1 207	2 272	26 838/00	26 847/07		26 858	29 046		29 066/00	29 069	29 090/00	29 100/10	29 109
10	30	1 207	2 130	29 110/00	29 118/14		29 128	31 178		31 198/00	31 201	31 222/00	31 231/03	31 239
11	28	748	1 232	31 240/00	31 248/04		31 258	32 420		32 439/00	32 442	32 463/00		32 471

NOTE Expression of “nnn/mm” in buffer tracks means ”logical track number / sector number”.

Not for Resale

© ISO/IEC 2005 – All rights reserved

Table 8 – Location of DMAs of the Groove tracks in Band 0

	Beginning		Ending		Number of sectors
	Track No.	Sector No.	Track No.	Sector No.	
DMA1	0	0	2	6	41
Reserved	2	7	2	16	10
DMA2	3	0	5	6	41
Reserved	5	7	5	16	10
DMA3	3 460	0	3 462	6	41
Reserved	3 462	7	3 462	16	10
DMA4	3 463	0	3 465	6	41
Reserved	3 465	7	3 465	16	10

18.3 Disk Definition Structure (DDS)

The DDS shall consist of a table with a length of one sector. It specifies the method of initialization of the disk, the division of the rewritable zones into groups, and the start addresses of the PDL and SDL. The DDS shall be recorded in the first sector of each DMA at the end of initialization of the disk. The following information in Table 9 on the disk structure shall be recorded in each of the four DDSs.

Each Band shall be divided into two Groups, i.e. one is for Groove tracks and another is for Land tracks.

The rewritable zone is intended for the user to write data into.

The rewritable zone shall extend from sector 0 of track 6 of the groove track to the last sector of track 32 438 of the land track excluding interrupting buffer tracks and DMAs 3 & 4. Every band shall be recorded in bytes 22 to 46 of the DDS as being rewritable.

The layout of the Data field of all sectors in this zone shall be as specified in Annex D.

18.4 Partitioning

During initialization of cartridges, the Data Zone shall be partitioned into 12 consecutive groups. Each group shall span one complete band with the exception of tracks 0 to 5 and 3 460 to 3 465 in band 0. Each group shall comprise full tracks of data sectors followed by full tracks of spare sectors. The logical track numbers associated with each group are shown in the Table 7. Each group shall be recorded in the DDS as being rewritable.

18.5 Logical block address

Logical block address 0 shall be the first sector of the first data track of groove track in the Band 0. The Logical block address shall be allocated as shown in Table 10.

© ISO/IEC 2005 All rights reserved

Copyright International Organization for Standardization
Reproduced by IHS under license with ISO
No reproduction or networking permitted without license from IHS
Not for Resale

Table 9 – Byte assignment of the Disk Definition Structure

Byte No.	Description	Mandatory Setting
0	DDS Identifier	(0A)
1	DDS Identifier	(0A)
2	Media Identifier	(00)
3	Disk has been certified	(01)
	Disk has not been certified	(02)
4	Number of groups MSB	(00)
5	Number of groups LSB	(19)
6 to 13	Reserved	(00)
14	Start Address of PDL, Track MSB	-
15	Start Address of PDL	-
16	Start Address of PDL, Track LSB	-
17	Start Address of PDL, Sector	-
18	Start Address of SDL, Track MSB	-
19	Start Address of SDL	-
20	Start Address of SDL, Track LSB	-
21	Start Address of SDL, Sector	-
22	Group 0 Type	(01)
23	Group 1 Type	(01)
24	Group 2 Type	(01)
25	Group 3 Type	(01)
26	Group 4 Type	(01)
27	Group 5 Type	(01)
28	Group 6 Type	(01)
29	Group 7 Type	(01)
30	Group 8 Type	(01)
31	Group 9 Type	(01)
32	Group 10 Type	(01)
33	Group 11 Type	(01)
34	Group 12 Type	(01)
35	Group 13 Type	(01)
36	Group 14 Type	(01)
37	Group 15 Type	(01)
38	Group 16 Type	(01)
39	Group 17 Type	(01)
40	Group 18 Type	(01)
41	Group 19 Type	(01)
42	Group 20 Type	(01)
43	Group 21 Type	(01)
44	Group 22 Type	(01)
45	Group 23 Type	(01)
46	Reserved	(01)
47	Number of Defective Sector, maximum 8 sectors	-
48 to 127	Reserved	(00)
128	Address of the First Defective Sector (Track Number, MSB)	-
129	Address of the First Defective Sector (Track Number)	-
130	Address of the First Defective Sector (Track Number, LSB)	-
131	Address of the First Defective Sector (Sector Number)	-
…	…	
x-3	Address of the Last Defective Sector (Track Number, MSB)	-
x-2	Address of the Last Defective Sector (Track Number)	-
x-1	Address of the Last Defective Sector (Track Number, LSB)	-
X (max:255)	Address of the Last Defective Sector (Sector Number)	-
x+1 to 2047	Reserved	(00)

The following data is reserved for Byte 2. : (01) to (0F).

© ISO/IEC 2005 – All rights reserved
Copyright International Organization for Standardization
Reproduced by IHS under license with ISO
No reproduction or networking permitted without license from IHS
Not for Resale

In the above table, the symbol "**-**" means that the appropriate value is to be entered in the DDS.

The setting (01) means rewritable and (00) not applicable.

Table 10 – Layout of Logical block address

Band 0		Band 1		Band 2				Band 11	
Groove	Land	Groove	Land	Groove	Land			Groove	Land

Band	Groove		Land	
	Start	End	Start	End
0	0	57 952	57 953	115 905
1	115 906	171 291	171 292	226 677
2	226 678	280 193	280 194	333 709
3	333 710	385 134	385 135	436 559
4	436 560	485 570	485 571	534 581
5	534 582	581 263	581 264	627 945
6	627 946	672 213	672 214	716 481
7	716 482	758 420	758 421	800 359
8	800 360	839 952	839 953	879 545
9	879 546	916 741	916 742	953 937
10	953 938	988 787	988 788	1 023 637
11	1 023 638	1 043 392	1 043 392	1 063 145

19 Defect management

Defective sectors in the rewritable zone shall be replaced by good sectors according to the defect management method described below. The disk shall be initialized before use. This International Standard allows initialization with or without certification. Defective sectors are handled by a Linear Replacement Algorithm and, optionally, a sector Slipping Algorithm. The total number of defective sectors replaced by both algorithms shall not be greater than 8 976.

19.1 Initialization of the disk

During initialization of the disk, the four DMAs are recorded prior to the first use of the disk. Each rewritable group shall contain a number of full tracks for data sectors followed by a number of full tracks for spare sectors. The spare sectors can be used as replacements for defective data sectors. Initialization can include a certification of the rewritable groups whereby defective sectors are identified and skipped.

All DDS parameters shall be recorded in the four DDS sectors. The PDL and SDL shall be recorded in the four DMAs. The requirements for the recording of the PDLs and SDLs are stated in Tables 11 and 12.

19.2 Certification

If the disk is certified, the certification shall be applied to the data sectors and to the spare sectors in the groups. The method of certification is not stated by this Standard. It may involve erasing, writing, and reading the sectors in the groups. Defective sectors found during certification shall be handled by the Slipping Algorithm or, where applicable, by the Linear Replacement Algorithm. Defective sectors shall not be used for reading or writing.

© ISO/IEC 2005 All rights reserved

Copyright International Organization for Standardization
Reproduced by IHS under license with ISO
No reproduction or networking permitted without license from IHS
Not for Resale

19.2.1 Slipping Algorithm

The Slipping Algorithm shall be applied individually to each and every group in the rewritable zone if certification is performed.

A defective data sector found during certification shall be replaced by the first good sector following the defective sector, and so causes a slip of one sector towards the end of the group. The last data sectors will slip into the spare sector area of the group. The address of the defective sector is written in the PDL. If no defective sectors are found during certification, an empty PDL is recorded.

The addresses of spare sectors, beyond the last data sector slipped into the spare area (if any), which are found to be defective during certification shall be recorded in the PDL. Thus, the number of available spare sectors is diminished accordingly.

If the spare sector area of a group becomes exhausted during certification, the defective sector shall be handled by the Linear Replacement Algorithm. This process involves assigning a replacement sector from the spare sector area of another group and cannot be accomplished until the other group has been certified. This is due to the fact that the next available spare sector is not known until its group is certified, i.e. the Slipping Algorithm has been applied.

19.2.2 Linear Replacement Algorithm

The Linear Replacement Algorithm is used to handle defective sectors found after certification. It is also used during certification in the event of the spare area of a group becoming exhausted.

The defective sector shall be replaced by the first available good spare sector of the group. If there are no spare sectors left in the group, the defective sector shall be replaced by the first good spare sector of another group. The addresses of the defective sector and of the replacement sector shall be recorded in the SDL.

The addresses of sectors already recorded in the PDL shall not be recorded in the SDL.

If a replacement sector listed in the SDL is later found to be defective, it shall be dealt with by making a new entry in the SDL indicating a replacement sector for that defective sector.

19.3 Disks not certified

The Linear Replacement Algorithm is also used to handle sectors found defective on disks which have not been certified.

A defective sector shall be replaced by the first available good spare sector of the group. If there are no spare sectors left in the group, the defective sector shall be replaced by the first good spare sector of another group. The addresses of the defective sector and of the replacement sector shall be recorded in the SDL.

If there exists a list of addresses of the defective sectors in the PDL, these sectors shall be skipped for use even if the disks are not certified. This process is same as the process specified in 19.2.1 for the certified disks.

19.4 Write procedure

When writing data in the sectors of a group, a defective sector listed in the PDL shall be skipped, and the data shall be written in the next data sector, according to the Slipping Algorithm. If a sector to be written is listed in the SDL, the data shall be written in the spare sector pointed to by the SDL, according to the Linear Replacement Algorithm.

19.5 Primary Defect List (PDL)

A PDL shall always be recorded; it may be empty.

© ISO/IEC 2005 – All rights reserved
Copyright International Organization for Standardization
Reproduced by IHS under license with ISO
No reproduction or networking permitted without license from IHS
Not for Resale

A list of defective sectors may be obtained by means other than certification of the disk.

The PDL shall contain the addresses of all defective sectors identified at initialization. The addresses shall be listed in ascending order. The PDL shall be recorded in the minimum number of sectors necessary, and it shall begin in the first user data byte of the first sector. All unused bytes of the last sector of the PDL shall be set to (FF). The information in Table 10 shall be recorded in each PDL.

In the case of a multiple-sector PDL, the list of addresses of the defective sectors shall continue with the first byte of the second and subsequent sectors. Thus, the PDL Identifier and the Number of Addresses of the PDL shall be present only in the first sector.

In an empty PDL bytes 2 and 3 shall be set to (00) and bytes 4 to 2 047 shall be set to (FF).

Table 11 – Content of the PDL

Byte	PDL Content
0	(00), PDL Identifier
1	(01), PDL Identifier
2	Number of Addresses in the PDL, MSB
3	Number of Addresses in the PDL, LSB (if bytes 2 and 3 are set to (00), byte 3 is the end of the PDL)
4	Address of the First Defective Sector (Track Number, MSB)
5	Address of the First Defective Sector (Track Number)
6	Address of the First Defective Sector (Track Number, LSB)
7	Address of the First Defective Sector (Sector Number)
...	...
x-3	Address of the Last Defective Sector (Track Number, MSB)
x-2	Address of the Last Defective Sector (Track Number)
x-1	Address of the Last Defective Sector (Track Number, LSB)
X	Address of the Last Defective Sector (Sector Number)

19.6 Secondary Defect List (SDL)

The Secondary Defect List (SDL) is created during initialization and used during and after certification. All disks with a rewritable zone shall have an SDL recorded during initialization.

The SDL shall contain entries in the form of addresses of defective data sectors and addresses of the spare sectors which replace them. Each entry in the SDL contains 8 bytes, viz. four each for the address of a defective sector and for the address of its replacement sector.

The list of addresses shall contain the addresses of the defective sectors and their replacement sectors. The addresses of the defective sectors shall be in ascending order.

The SDL shall be recorded in the minimum number of sector necessary, and it shall begin in the first user data byte of the first sector. All unused bytes of the last sectors of the SDL shall be set to (FF). The following information shall be recorded in each of the four SDLs.

The addresses of sectors already recorded in the PDL shall not be recorded in the SDL.

If a replacement sector listed in the SDL is later found to be defective, a new entry shall be made in the SDL indicating a replacement sector for that defective sector.

In the case of a multiple-sector SDL, the list of addresses of defective and of replacement sectors shall continue with the first byte of the second and subsequent sectors. Thus, the contents of bytes 0 to 15 in Table 12 shall be present only in the first sector.

--`,,`,`-`-`,,`,,`,`,,`---

© ISO/IEC 2005 All rights reserved

Copyright International Organization for Standardization
Reproduced by IHS under license with ISO
No reproduction or networking permitted without license from IHS
Not for Resale

Table 12 – Content of the SDL

Byte	SDL Content
0	(00), SDL Identifier
1	(02), SDL Identifier
2	(00)
3	(01)
4	List Length in bytes in the SDL, MSB
5	List Length in bytes in the SDL
6	List Length in bytes in the SDL, LSB
7	(00)
8	(02)
9	(01)
10-13	(00)
14	Number of Entries in the SDL, MSB
15	Number of Entries in the SDL, LSB (each entry is 8 bytes long)
16	Address of the First Defective Sector (Track Number, MSB)
17	Address of the First Defective Sector (Track Number)
18	Address of the First Defective Sector (Track Number, LSB)
19	Address of the First Defective Sector (Sector Number)
20	Address of the First Replacement Sector (Track Number, MSB)
21	Address of the First Replacement Sector (Track Number)
22	Address of the First Replacement Sector (Track Number, LSB)
23	Address of the First Replacement Sector (Sector Number)
...	...
y-7	Address of the Last Defective Sector (Track Number, MSB)
y-6	Address of the Last Defective Sector (Track Number)
y-5	Address of the Last Defective Sector (Track Number, LSB)
y-4	Address of the Last Defective Sector (Sector Number)
y-3	Address of the Last Replacement Sector (Track Number, MSB)
y-2	Address of the Last Replacement Sector (Track Number)
y-1	Address of the Last Replacement Sector (Track Number, LSB)
y	Address of the Last Replacement Sector (Sector Number)

Section 4 - Characteristics of embossed information

20 Method of testing

The format of the embossed information on the disk is defined in Clauses 13 to 18. Clauses 21 to 23 specify the requirements for the signals from grooves, Headers and embossed data, as obtained when using the Reference Drive defined in Clause 9.

Clauses 21 to 23 specify only the average quality of the embossed information. Local deviations from the specified values, called defects, can cause tracking errors, erroneous Headers or errors in the Data fields. These errors are covered by Section 6.

20.1 Environment

All signals in Clauses 21 to 23 shall be within their specified ranges with the cartridge in any environment in the range of allowed operating environments defined in 8.1.2.

20.2 Use of the Reference Drive

All signals specified in Clauses 21 to 23 shall be measured in the indicated channels of the Reference Drive. The drive shall have the following characteristics for the purpose of these tests.

© ISO/IEC 2005 – All rights reserved
Copyright International Organization for Standardization
Reproduced by IHS under license with ISO
No reproduction or networking permitted without license from IHS
Not for Resale

20.2.1 Optics and mechanics

The focussed optical beam shall have the properties defined in 9.2 a) to f). The disk shall rotate as specified in 9.5.

20.2.2 Read power

For the testing specified in this section, the optical power incident on the entrance surface of the disk and used for reading the information shall be 1,3mW.

The read power for reading control track shall be in the range given in byte 6 of the Control Zone (see Annex E).

The read power for reading the Data Zone shall be in the range given in byte 21 to 23 of the Control Zone (see Annex E).

The reading shall be done at a media temperature of 25 °C ± 1 °C.

20.2.3 Read channels

The drive shall have a read channel, in which the total amount of light in the exit pupil of the objective lens is measured. This channel shall have the implementation as given by Channel 1 in 9.1.

20.2.4 Tracking

During the measurement of the signals, the axial tracking error between the focus of the optical beam and recording layer shall not exceed

e_{max}(axial) = 0,5 µm

and the radial tracking error between the focus of the optical beam and the centre of a track shall not exceed

e_{max}(radial) = 0,04 µm

20.3 Definition of signals

Figure 21 shows the signals specified in Clauses 21 to 23.

All signals are linearly related to currents through a photo-diode detector, and are therefore linearly related to the optical power falling on the detector.

I_1 and I_2 are the outputs of the two halves of the split photo-diode detector in the tracking channel (see 9.1 and Figure 21a).

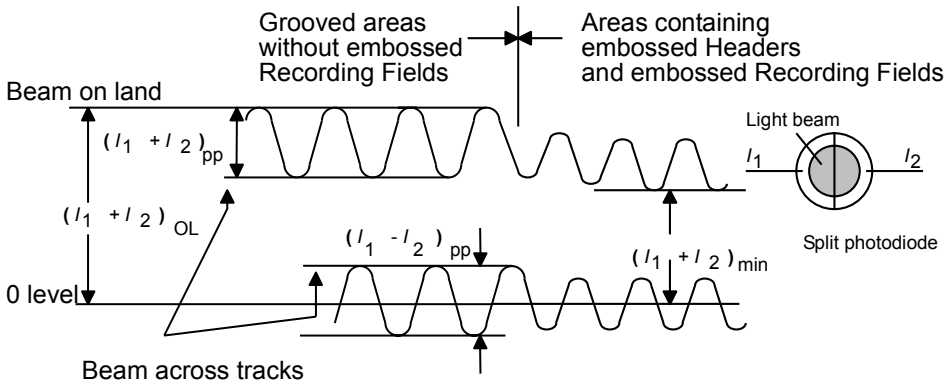

Figure 21a – Signals from grooves in the tracking Channel

--`,,`,`-`-`,,`,,`,`,,`---

© ISO/IEC 2005 All rights reserved

Copyright International Organization for Standardization
Reproduced by IHS under license with ISO
No reproduction or networking permitted without license from IHS
Not for Resale

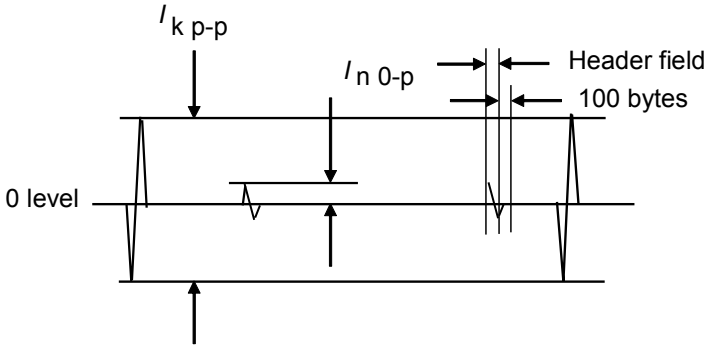

Figure 21b – Divided push-pull signal at on tracking

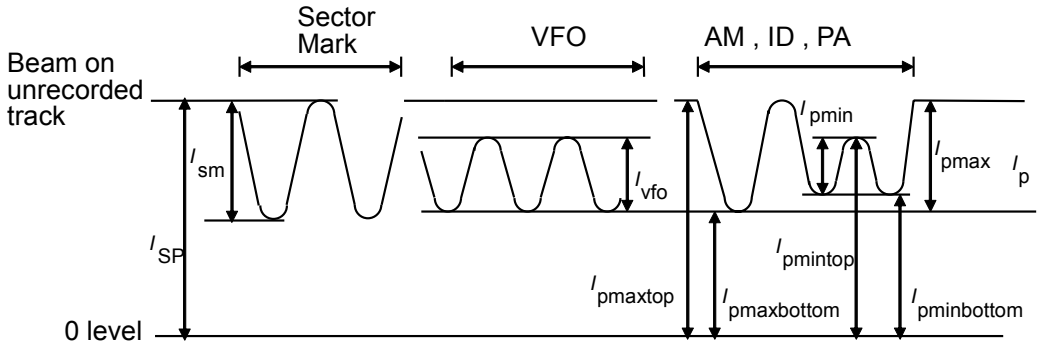

Figure 21c – Signals from Headers in Channel 1

Figure 21 – Signals from Headers, grooves and embossed Recording Fields

21 Signals from grooves

The signals ($I_1 + I_2$) and ($I_1 - I_2$) shall be filtered in order that frequencies above 1 MHz are attenuated by at least 40 dB thereby eliminating the effect of modulation due to embossed marks. (See Figure 21 and Annex L).

21.1 Divided push-pull signal

21.1.1 Open-loop tracking signal

The first term of the divided push-pull signal is the peak-to-peak amplitude derived from the instantaneous level of the differential output ($I_1 - I_2$) from the split photodiode detector when the light beam crosses the unrecorded or embossed Recording fields of grooved tracks divided by the instantaneous level of the sum output ($I_1 + I_2$) from the split photodiode detector when the light beam crosses these areas.

The second term of the divided push-pull signal is the ratio of the minimum peak-to-peak amplitude derived from the instantaneous level of the differential output ($I_1 - I_2$) divided by the instantaneous level of the sum output ($I_1 + I_2$) from the split photodiode detector when the light beam crosses the unrecorded or embossed Recording fields of grooved tracks to the maximum peak-to-peak amplitude derived from the instantaneous level of the differential output ($I_1 - I_2$) divided by the instantaneous level of the sum output ($I_1 + I_2$) from the split photodiode detector when the light beam crosses the unrecorded or embossed Recording fields of grooved tracks.

© ISO/IEC 2005 – All rights reserved
Copyright International Organization for Standardization
Reproduced by IHS under license with ISO
No reproduction or networking permitted without license from IHS
Not for Resale

The split photodiode detector separator shall be parallel to the projected track axis. In this measurement, the I_1 and I_2 signals shall be provided by the split photodiode detector. The tracking servo shall be operating in open-loop mode during this measurement.

The first term shall meet the following requirements:

a) in areas containing embossed Headers and embossed Recording fields:

$$0{,}12 \leq \left[\frac{(I_1 - I_2)}{(I_1 + I_2)}\right]_{pp} \leq 0{,}58$$

b) in grooved areas in the Information Zone without embossed Recording fields:

$$0{,}85 \leq \left[\frac{(I_1 - I_2)}{(I_1 + I_2)}\right]_{pp} \leq 1{,}29$$

The second term shall satisfy $$0{,}37 \leq \frac{\left[\frac{(I_1 - I_2)}{(I_1 + I_2)}\right]_{ppmin}}{\left[\frac{(I_1 - I_2)}{(I_1 + I_2)}\right]_{ppmax}} \leq 0{,}47$$

21.1.2 Closed-loop tracking signal

Deviation from 0-level of divided push-pull signal at tracking condition (I_N) shall meet the following condition, where I_k is amplitude of kick-back signal on divided push-pull signal. The deviation at the header fields shall be measured during the beam is on the header fields and additional 100 Bytes as shown in Figure 21b.

a) at the header fields

$$\frac{I_{N(0p)}}{I_{k(pp)}} \leq 0{,}30$$

b) at the recording fields

$$\frac{I_{N(0p)}}{I_{k(pp)}} \leq 0{,}07$$

21.2 Phase depth

The phase depth of the grooves shall be less than 180 °.

21.3 Track location

The tracks are located at those radii on the disk where (I_1 - I_2) equals 0 and (I_1 + I_2) has its maximum value.

22 Signals from Headers

The signals obtained from the embossed Headers shall be measured in Channel 1 of the Reference Drive.

The signal from an embossed mark in the recording layer is defined as the peak-to-peak value of the modulation of the signal in Channel 1 caused by the mark when the beam follows a recorded track (see Figure 21 and Annex L).

© ISO/IEC 2005 All rights reserved

Copyright International Organization for Standardization
Reproduced by IHS under license with ISO
No reproduction or networking permitted without license from IHS
Not for Resale

22.1 Sector Mark

The signal I_{sm} from the Sector Mark shall meet the following requirements:

$$0{,}15 \leq \frac{I_{sm}}{I_{SP}} \leq 0{,}95$$

where I_{SP} is the top level of the sector mark on the land track at any time.

22.2 VFO1 and VFO2

The signal I_{vfo} from the marks in the VFO1 and VFO2 fields shall meet the following requirements:

$$0{,}10 \leq \frac{I_{vfo}}{I_{SP}} \leq 0{,}90$$

In addition the condition

$$\frac{I_{vfo}}{I_{P\,max}} \geq 0{,}30$$

shall be satisfied within each sector, where I_{pmax} is the signal with the maximum amplitude in that sector from embossed mark signals I_p defined in 22.3, and I_{vfo} is the peak-to-peak amplitude of the read signal from the VFO area.

22.3 Address Mark, ID field and Postamble

The signal I_p from marks in the Address Mark, ID and Postamble fields shall meet the following requirements:

$$0{,}10 \leq \frac{I_p}{I_{SP}} \leq 0{,}90$$

$$\frac{I_{P\,min}}{I_{P\,max}} \geq 0{,}30$$

The second requirement applies over any Header. I_{pmin} and I_{pmax} are the signals with minimum and maximum amplitude in those fields.

22.4 Timing jitter

The header signal shall be read and detected using the read Channel circuit defined in Annex H under the conditions specified in 20.2.2. The timing jitter Jt(H) shall be measured according to the procedure in Annex H and shall meet the following requirements:

$$Jt(H) \leq 0{,}08\ T$$

where T is the Channel clock period, Jt(H) is the summation of standard deviation (sigma) of the difference between the leading-to-leading edge lengths or trailing-to-trailing edge lengths and the mean value of each *n*T. The ideal length corresponds to n Channel bit times T. Jt(H) is illustrated Annex H, in Figure H.3.

All the time interval samples detected from the Header signals on the recording layer shall satisfy the condition of Jt(H).

--`,,`,,`-`-`,,`,,`,`,,`---

© ISO/IEC 2005 – All rights reserved
Copyright International Organization for Standardization
Reproduced by IHS under license with ISO
No reproduction or networking permitted without license from IHS
Not for Resale

22.5 Asymmetry

Asymmetry is the deviation between the centre levels of the signals which give maximum and minimum amplitude I_{pmax} and I_{pmin} in Address Mark, ID, and PA fields (see Figure 17) and shall meet the following requirements:

$$-0,15 \le \frac{\frac{(I_{p\,max\,top} + I_{p\,max\,bottom})}{2} - \frac{(I_{p\,min\,top} + I_{p\,min\,bottom})}{2}}{(I_{p\,max\,top} - I_{p\,max\,bottom})} \le 0,15$$

23 Signals from embossed Recording fields

23.1 Signal amplitude

If the disk has an embossed zone, the Recording field of all sectors in this zone shall contain embossed marks. The signals from these marks shall be measured in Channel 1 (see 9.1 and Annex L). Acceptable defects of the marks are specified in Section 6**.** The signal from all embossed Recording fields is defined as the peak-to-peak value of the modulation of the signal.

The signal I_d from marks in the Recording fields of the embossed zone shall meet the following requirements:

$$0,10 \le \frac{I_d}{I_{SP}} \le 0,90$$

$$\frac{I_{d\,min}}{I_{d\,max}} \ge 0,30$$

The last requirement applies over Recording fields. I_{dmin} and I_{dmax} are the signals with minimum and maximum amplitude in the Recording field of a sector.

23.2 Timing jitter

The embossed data signal shall be read and detected using the read Channel circuit defined in Annex H under the conditions specified in 20.2.2. The timing jitter Jt(D) shall be measured according to the procedure in Annex H and shall meet the following requirement:

$$Jt(D) \le 0,08\ T$$

where T is the Channel clock period and Jt(D) is the summation of standard deviation (sigma) of the difference between the measured leading-to-leading edge lengths or trailing-to-trailing edge lengths and the mean value of each *n*T. Jt is illustrated in Annex H, Figure H.3.

All the time interval samples detected from the embossed data signals on the recording layer shall satisfy the above conditions of Jt(D).

© ISO/IEC 2005 All rights reserved

Copyright International Organization for Standardization
Reproduced by IHS under license with ISO
No reproduction or networking permitted without license from IHS
Not for Resale

Section 5 - Characteristics of the recording layer and user data

24 Method of testing

Clauses 25 to 27 describe a series of tests to assess the magneto-optical properties of the recording layer, as used for writing and erasing data. The tests shall be performed only in the Recording field of the sectors in the rewritable zone. The write, read and erase operations necessary for the tests shall be made on the same Reference Drive (see also Annex H).

Clauses 25 to 27 specify only the average quality of the recording layer. Local deviations from the specified values, called defects, can cause write or erase problems. These defects are covered by Section 6.

24.1 Environment

All signals in Clauses 25 to 27 shall be within their specified ranges with the cartridge in any environment in the range of allowed operating environments defined in 8.1.2. except as otherwise noted.

24.2 Reference Drive

The write and erase tests described in Clauses 25 to 27 shall be measured in Channel 2 of the Reference Drive. The drive shall have the following characteristics for the purpose of these tests.

24.2.1 Optics and mechanics

The focused optical beam shall have the properties defined in 9.2 a) to f). The disk shall rotate as specified in 9.5.

24.2.2 Read power

For the test specified in the Section 5, the maximum optical power regard to be incident on the entrance surface of the disk and used for reading the information shall be 7,5 mW.

The read power for reading the Data Zone shall be in the range given in byte 21 to 23 of the Control Track Zone (see Annex E).

24.2.3 Read magnetic field

The requirements of all test shall be met with the read magnetic field at the recording layer smaller than 36 000 A/m at all radii.

The read magnetic fields for all tests, pointing in the North to South direction, shall be within 10 ° from the normal to the Disk Reference Plane P, in the direction of the incident beam, i.e. from the entrance surface to the recording layer. The value of read magnetic field shall be recorded in the Control Zone at the test rotation frequency of 50 Hz.

24.2.4 Read channel

The Reference Drive shall have a read channel which can detect magneto-optical marks in the recording layer. This channel shall have an implementation equivalent to that given by Channel 2 in 9.3.

The edge positions in time shall be measured for testing purposes by a threshold detection method. The threshold value is referenced to the centre of the peak-to-peak envelope of the readback signal. The positive peak and negative peak signals of the envelope circuit shall each contain a single pole filter with a -3 dB roll-off point at 50 kHz.

© ISO/IEC 2005 – All rights reserved
Copyright International Organization for Standardization
Reproduced by IHS under license with ISO
No reproduction or networking permitted without license from IHS
Not for Resale

24.2.5 Tracking

During the measurement of the signals, the focus of the optical beam shall follow the tracks as specified in 20.2.4.

24.2.6 Signal detection for testing purposes

The signal from the Read Channel is not equalized before detection. The signal shall be rolled off with a 3-pole Butterworth filter with a cut-off frequency of half the Channel clock frequency. All read testing is performed at the test rotation frequency of 50 Hz.

Nominally the threshold value shall be zero if the laser power calibration is perfect and there are no parameter variations. However, in some measurements the threshold value may have to be adjusted to minimize the effects of mark size changes due to parameter variations during writing.

24.3 Write conditions

24.3.1 Write pulse and power

Marks are recorded on the disk by pulses of optical power superimposed onto a specified assist power *P*a at the test rotational frequency.

The test pulse trains are defined as follows for marks of length 2T, 4T and 8T.

2T marks are formed with a single 1,5T pulse of the power *Pw* superimposed into the assist power *P*a. The initial 2T portion of marks longer than 2T is formed with a 1,5T pulse of power *Pw*, with the incremental T lengths each being formed by the combination of a 0,5T (*P*a) and 0,5T (*Pw*) pair, where *P*a=Assist Power and *Pw*=Write Peak Power. The *n*T space after mark consists of 1,5T cooling time with the power zero and nT-1,5T with the assist power *P*a. The relationship of

Pw : *Pa* = 1,0 : 0,2 at 24 mm,

Pw : *Pa* = 1,0 : 0,3 at 32 mm,

Pw : *Pa* = 1,0 : 0,4 at 41,5 mm.

For mark lengths 2T , 4T and 8T, the pulse trains are as follows:

2T : 1,5T(*Pw*)0,5T(0)

4T : 1,5T(*Pw*)0,5T(*P*a)0,5T(*Pw*)0,5T(*P*a)0,5T(*Pw*)0,5T(0)

8T : 1,5T(*Pw*)0,5T(*P*a)0,5T(*Pw*)0,5T(*P*a)0,5T(*Pw*)0,5T(*P*a)0,5T(*Pw*)0,5T(*P*a)0,5T(*Pw*)
0,5T(*P*a)0,5T(*Pw*)0,5T(*P*a) 0,5T(*Pw*)0,5T(0)

The generalized pulse train for the purpose of testing is shown graphically in Figure 22.

Individual pulses shall have 10 % to 90 % rise and fall times of less than 3 ns.

The measurement of laser power shall be done in pulsed operation by averaging, for example, one pulse every 50 ns, using a spherical radiometer. The averaging method of measuring the laser power will minimize the accumulation of pulse width and pulse amplitude tolerances (see Annex U).

The values *Pw* used in any media tests shall be the ones measured for that particular piece of media using the method in 24.3.3. Values within 5 % of *Pw* that were measured by the media manufacturer at 24 mm, 32 mm, and 41,5 mm on their typical media shall be recorded in the Control Zone.

© ISO/IEC 2005 All rights reserved

Copyright International Organization for Standardization
Reproduced by IHS under license with ISO
No reproduction or networking permitted without license from IHS
Not for Resale

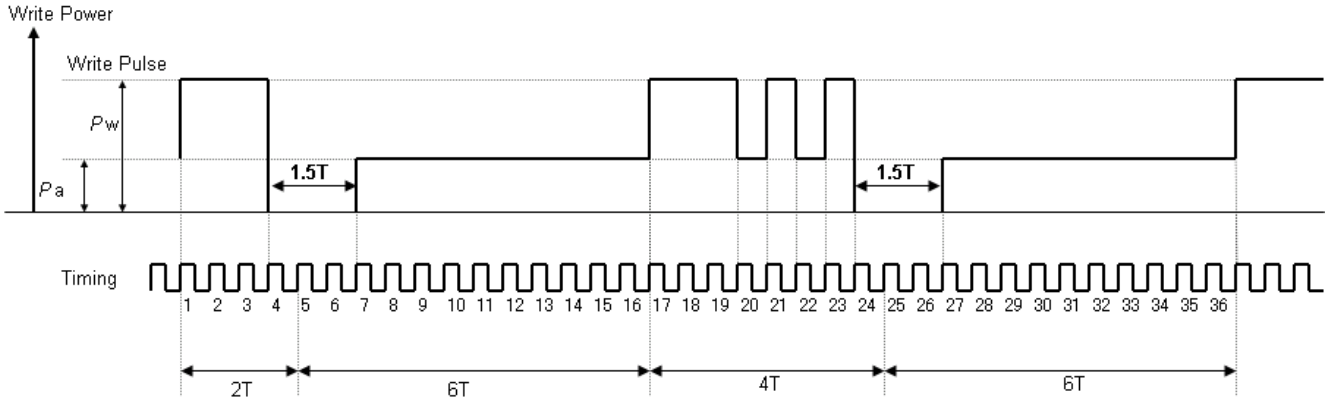

*P*w = Peak Power of Writing

*P*a = Assist Power

Figure 22a – Wave form of the write pulse

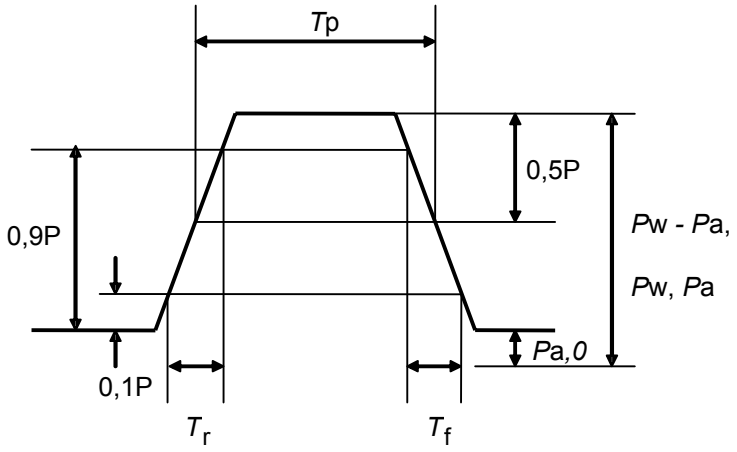

*P*w = Write Power

*T*r = Rise Time

*P*a= Assist power

P = *P*w – *P*a , *P*w , *P*a

*T*f = Fall Time

*T*p = Write pulse width

Figure 22b – Shape of the write pulse

Figure 22 – Write pulse formation

24.3.2 Write magnetic field

The requirements of all tests shall be met for all magnetic field intensities, at the recording layer during recording, in the range from 16 000 A/m to 32 000 A/m except where otherwise noted.

© ISO/IEC 2005 – All rights reserved
Copyright International Organization for Standardization
Reproduced by IHS under license with ISO
No reproduction or networking permitted without license from IHS
Not for Resale

The write magnetic fields for all tests, pointing in the north to south direction, shall be within 10 ° from the normal to the Disk Reference Plane P, in the direction of the incident beam, i.e. from the entrance surface to the recording layer.

24.3.3 2T and 4T pulse power determination

The following procedure shall be used by the media manufacturer to measure values for the 4T pulse power P_W that is recorded in the Control Zone.

Erase and write several tracks at 24 mm, 32 mm, and 41,5 mm radii of the disk under test by repeatedly writing the following test pattern:

Run Length	2T	6T	4T	6T
Mark or Space	M	S	M	S

The recording shall be done at a media temperature of 25 °C ± 1 °C, a magnetic field intensity at the recording layer of 24 000 A/m ± 5 %, and the test rotational frequency.

Read and detect the readback signal with the detection method given in 24.2.6. Adjust the focus for maximum read back signal amplitude using the 2T mark and set the threshold at 50 % of the peak-to-peak signal amplitude for this test. Vary the focus ± 0,25 μm and check the output for best E_{th}.

Measure the average distance between edges, namely L_2, L_4, and L_6 for the 2T, 4T and 6T runs respectively, using a time interval analyzer (TIA) at 24 mm, 32 mm and 41,5 mm radii. Averaging should be done using 10^5 independent time interval samples on several tracks at each radial location. Note that the 6T distribution on the TIA will in general be bimodal. The amount of bimodality depends on the thermal properties of the media. The value of L_6 is the mean of this bimodal distribution.

Adjust the P_W power so that L_6 is as close to 6T as possible. Since the length of L_6 can be minimized at 2 points, the P_W power recorded in the Control Zone shall be at a point where the L_6 is decreasing in length as the write power is increased.

24.3.4 Media power sensitivity

The pulse power P_w is the upper bound of the power required to form 4T marks as a function of pulse duration T_p. P_w is given by the reciprocity relationship

$$P_W = C\left(\frac{1}{T_P} + \frac{1}{\sqrt{T_P}}\right) mW$$

where $T_P = 1{,}25T = \dfrac{1{,}5T + 0{,}5T + 0{,}5T}{2}$

The following formula shall be used by the media manufacturer to measure the value of the media power sensitivity C using the T_p and P_w data from 24.3.3 (see also Figure 22):

$$C = P_W\left(\frac{T_p \cdot \sqrt{T_P}}{T_p + \sqrt{T_P}}\right)$$

The value for C shall be less than 50 at radii 24 mm, 32 mm, and 41,5 mm.

24.4 Erase conditions

Marks are erased from the disk by a constant optical power in the presence of a magnetic field.

© ISO/IEC 2005 All rights reserved

Copyright International Organization for Standardization
Reproduced by IHS under license with ISO
No reproduction or networking permitted without license from IHS
Not for Resale

24.4.1 Erase power

The erase power is the continuous optical power required for any given track at the entrance surface to erase marks written according to 24.3 to a specified level (see Clause 27).

The erase power for erasing the Data Zone shall be in the range given in byte 41 to 43 of the Control Track Zone (see Annex E).

The actual erase power shall be equal to the interpolated values ± 5 %.

The continuous erase power shall not exceed 13 mW.

24.4.2 Erase magnetic field

The requirements of all test shall be met with the erase magnetic field at the recording layer greater than 24 000 A/m at all radii.

The erase magnetic field, pointing in the North to South direction, shall be within 10° from the normal to the disk reference plane P, in the direction of the reflected beam, i.e. from the recording layer to the entrance surface.

24.5 Definition of signals

The signals in Channel 2 are linearly related to the difference between the currents through the photo-diode detectors K_1 and K_2, and are therefore linearly related to the optical power falling on the detectors (see 9.1).

25 Magneto-optical characteristics

This Clause shall be for all phase differences between – 8 ° and + 8 ° in the optical system as defined in 9.1

25.1 Figure of merit

The figure of merit F of the recording layer is a measure of the magnitude of the signal obtained from magneto-optical marks. It is defined as $R\sin\theta\cos 2ß$, where R is the reflectance of the disk expressed as a decimal fraction, θ is the Kerr rotation of the optical polarization between a magnetized domain and non-magnetized domain, and $ß$ is the ellipticity of the reflected beam, averaged over the aperture. The polarity of the figure of merit is defined to be negative for a magneto-optical mark written in a Fe-rich Fe-Tb alloy recording layer with the write magnetic field in the direction specified in 24.3.2. In this case the direction of the Kerr rotation is counter-clockwise as seen from the incident beam.

The polarity and magnitude of the value of the figure of merit shall be as specified in byte 10 and 11 of the Control data (see Annex E). The figure of merit shall comply with

$$0{,}0025 < |F| < 0{,}0050$$

The measurement of the actual value F_m shall be made according to Annex G. This actual value F_m shall be within 12 % of the nominal value.

25.2 Imbalance of the magneto-optical signal

The imbalance of the magneto-optical signal caused by birefringence of the substrate is the ratio of the amplitude of the Channel 2 peak-to-peak signal divided by the same signal after being passed through filters having different characteristics for measuring both the d.c. and a.c. imbalances. The measurement is made in the Data field of a sector using the 2T pattern.

d.c. Imbalance: Low Pass(Channel 2) / High Pass1 (Channel 2)

© ISO/IEC 2005 – All rights reserved
Copyright International Organization for Standardization
Reproduced by IHS under license with ISO
No reproduction or networking permitted without license from IHS
Not for Resale

a.c. Imbalance: High Pass2(Channel 2) / High Pass1 (Channel 2)

The d.c. imbalance shall not exceed 4,0.

The a.c. imbalance shall be a function of a rolloff frequency of High Pass 2 as shown in Figure 23.

1kHz ≤ rolloff frequency ≤ 100kHz

The a.c. imbalance ≤ $10^{(\log (5 / (1.2 \times \text{rolloff frequency})))}$

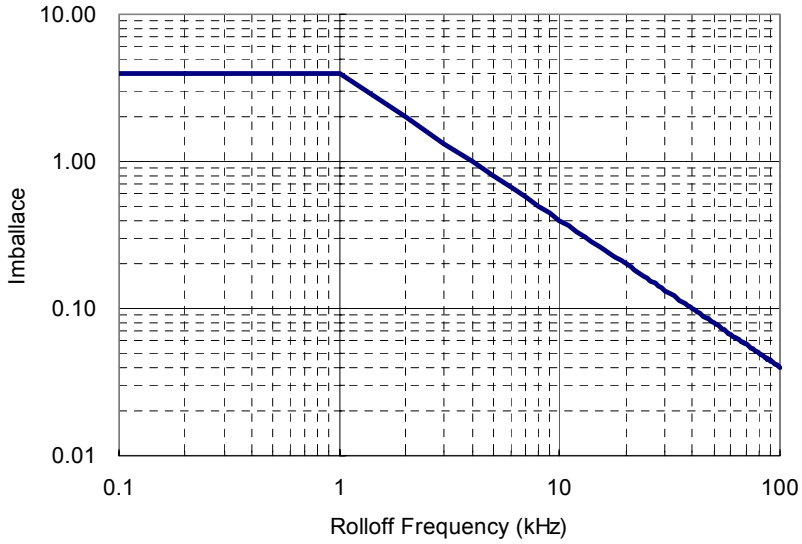

Figure 23 – The a.c. imbalance of the signal

High Pass 1 : 3 pole Butterworth with a -3 dB rolloff at 50 kHz and a cutoff at 1/2 of the channel clock frequency

High Pass 2 : -6 dB / Oct decrement

Low Pass : -3 dB roll off at 1 kHz

The effect of headers through the filters must be removed by a technique such as gating or sample-and-hold of the signal.

Also the Magneto-optical signals obtained from the embossed Headers of next band are measured as same as above method and have same value.

26 Write characteristics

26.1 Resolution

I_L is the peak-to-peak value of the signal obtained in Channel 2 (see 9.2) from 8T marks and 8T spaces written under the conditions given in 24.3, the longest interval allowed by the RLL (1,7) code for each zone, and read under the conditions specified in 24.2.

I_H is the peak-to-peak value of the signal obtained in Channel 2 from 2T marks and 2T spaces written under the conditions given in 24.3, the lowest interval allowed by the RLL (1,7) code for each zone ± 0,1 MHz, and read under the condition specified in 24.2.

© ISO/IEC 2005 All rights reserved

Copyright International Organization for Standardization
Reproduced by IHS under license with ISO
No reproduction or networking permitted without license from IHS
Not for Resale

The resolution $\frac{I_H}{I_L}$ (see Figure 24) shall not be less than 0,50 within any sector. It shall not vary by more than 0,20 over a track.

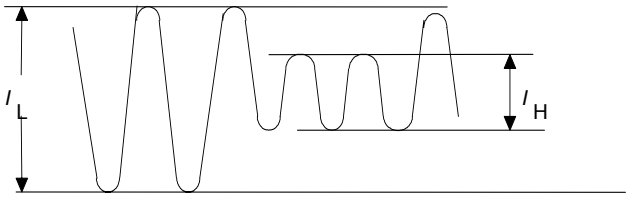

Figure 24 – Definition of I_L and I_H

26.2 Narrow-band signal-to-noise ratio (NBSNR)

The narrow-band signal-to-noise ratio is the ratio of the signal level to the noise level of a specified pattern, measured in a 30 kHz bandwidth. It shall be determined as follows.

Write a series of 2T marks followed by 2T spaces in the Recording field of a series of sectors at a frequency f_0 of the highest frequency allowed by the RLL (1,7) code for each zone ± 0,1 MHz. The write conditions shall be as specified in 24.3.

Read the Recording fields in Channel 2 under the conditions specified in 9.5 and 24.2, using a spectrum analyser with a bandwidth of 30 kHz. Measure the amplitudes of the signal and the noise at the frequency f_0 as indicated in Figure 25. The measurements shall be corrected for the effect of the Header fields, in order to obtain the value for the Recording field only.

The narrow-band signal-to-noise ratio is

$$20 \log_{10}\left(\frac{\text{signal level}}{\text{noise level}}\right)$$

The narrow-band signal-to-noise ratio shall be greater than 43 dB in any sector in the rewritable zone for all allowed values of the write magnetic field.

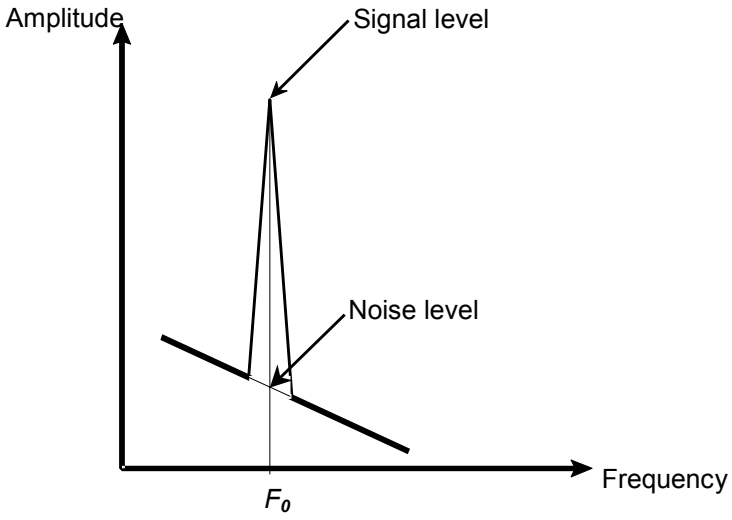

Figure 25 – Spectrum analyzer display

© ISO/IEC 2005 – All rights reserved
Copyright International Organization for Standardization
Reproduced by IHS under license with ISO
No reproduction or networking permitted without license from IHS
Not for Resale

26.3 Cross-talk ratio

The cross-talk ratio definition and measurement procedure describe the entities to be measured in terms of physical tracks. These physical tracks can consist of one or more logical tracks (see Clause 13). The number of logical tracks involved in the measurement must be adjusted for the Band in which the measurement is made.

26.3.1 Rewritable track test method

For rewritable tracks the test on cross-talk shall be carried out on any group of five adjacent unrecorded revolutions, designated (*n*-2), (*n*-1), *n*, (*n*+1), (*n*+2), in the rewritable zone. Erase the recording field of each of the sectors in these tracks.

Write a series of 2T marks followed by 2T spaces at a frequency f_1 for each zone ± 0,1 MHz in the Recording field of the sectors in track *n*. The write conditions shall be as specified in 24.3.

Read the Data fields of the sectors in the tracks (*n*-1), *n* and (*n*+1) under the conditions specified in 9.5 and 24.2.

The cross-talk from a track *n* to track (*n*-1) and to track (*n*+1) shall be lower than - 35 dB.

26.4 Timing jitter

The timing jitter can be obtained from the TIA data in 24.3.3. Measure the length in time of the leading-to-leading and trailing-to-trailing edges of the detected data from the 2T mark (L_2) followed by 6T space (L_6), and 6T space (L_6) followed by 2T mark (L_2) with TIA. The measurements shall be made using 10^5 independent time interval samples on several tracks at each radial location.

The value of timing jitter (due to the media) shall be less than 15 % of the time period T of one Channel bit for 24 mm, 32 mm and 41,5 mm radii.

26.5 Media thermal interaction

The following formulas shall be used by the media manufacturer to measure the value of the media thermal interaction E_{th} that is recorded in the Control Zone. The formulas use the L_2, L_4 and L_6 measurement data from 24.3.3.

First calculate the effective channel clock period T of the measurements at radius 32 mm:

$$T = \frac{L_2 + L_4 + 2 \times L_6}{18}$$

This T shall be checked to make sure that it has the correct value for the radius 32 mm in which the recording is done.

Calculate and record the thermal interaction error E_{th} using the following formula:

$$E_{th} = \frac{(L_4 - L_2 - 2 \times T)}{T} \times 100\ \%\ \text{of T}$$

The value for E_{th} shall be less than 27 % of the channel clock period T.

© ISO/IEC 2005 All rights reserved
Copyright International Organization for Standardization
Reproduced by IHS under license with ISO
No reproduction or networking permitted without license from IHS
Not for Resale

27 Erase power determination

This procedure shall be used by the media manufacturer to determine the erase powers that are recorded in the Control Zone. The erase power is the continuous power level for the given radius and rotation frequency that is sufficient to erase the current track without erasing the adjacent track.

The conditions for the erase power measurement are that the media temperature shall be 25 °C ± 1 °C, and the magnetic field intensities at the recording layer shall be 25 000 A/m ± 5 % at the test rotation frequency.

The procedure shall be:

Erase four adjacent tracks *n*, *n*+1, *n*+2, and *n*+3 in the User Zone with a relatively high erase power. Write a 2T tone on track *n*+1 and a 4T tone on track *n*+2 under the conditions given in 24.3.1. Erase track *n*+1 with the erase power to be tested. Measure the signal amplitude on both tracks *n*+1 and *n*+2 with a spectrum analyser.

Perform this test sequence with an initial low erase test power and increase the erase test power by 0,5 mW each time the test is repeated. Plot the track *n*+1 and track n+2 signal amplitudes as a function of the erase test power. Choose the erase power to be half way between the erase power where the track *n*+2 signal amplitude drops by 3 dB and the power where the track *n*+1 signal amplitude first reaches the media limited noise floor.

© ISO/IEC 2005 – All rights reserved
Copyright International Organization for Standardization
Reproduced by IHS under license with ISO
No reproduction or networking permitted without license from IHS
Not for Resale

Section 6 - Characteristics of user data

28 Method of testing

Clauses 29 and 30 describe a series of measurements to test conformance of the user data on the disk with this International Standard. It checks the legibility of both embossed and user-written data. The data is assumed to be arbitrary. The user-written data may have been written by any drive in any environment. The read tests shall be performed on the Reference Drive.

Whereas Clauses 20 to 27 disregard defects, Clauses 29 and 30 include them as an unavoidable deterioration of the read signals. The gravity of a defect is determined by the correctability of the ensuing errors by the error detection and correction circuit in the read channel defined below. The requirements in Clauses 29 and 30 define a minimum quality of the data, necessary for data interchange.

28.1 Environment

All signals in Clauses 29 to 30 shall be within their specified ranges with the cartridge in any environment in the range of allowed operating environments defined in 8.1.2. It is recommended that before testing the entrance surface of the optical disk shall be cleaned according to the instructions of the manufacturer of the disk.

28.2 Reference Drive

All signals specified in Clauses 29 to 30 shall be measured in the indicated channels of the Reference Drive. The drive shall have the following characteristics for the purpose of these tests:

28.2.1 Optics and mechanics

The focused optical beam shall have the properties already defined in 9.2 a) to f). The disk shall rotate as specified in 9.5.

28.2.2 Read conditions

The optical power incident on the entrance surface of the disk (used for reading the information) shall be specified in 20.2.2 for headers and embossed data and 24.2.2 for user data. The read magnetic field shall be specified in 24.2.3 for reading the user data.

28.2.3 Read amplifiers

The read amplifiers after the photo-detectors in Channels 1 and 2 shall be as specified in 9.3.

28.2.4 Mark Quality

The signals from both read amplifiers shall be converted from analog to binary with an edge detector as defined in Annex H. The output signals from Channels 1 and 2 shall be filtered without equalization and with the specified low-pass filter, and compared with their threshold levels of the comparator which shall be between 0,25 and 0,75 for the threshold fractional values. The threshold levels shall be adjusted to minimize the maximum offset (or bias) of the mark and space intervals from their desired (or true) values of 2T, 3T .... 7T, 8T. The output signals from the comparator are converted to binary signals with the edge detector (see Annex I).

The timing jitter in this section is defined as the standard deviation of the separately measured time intervals of leading-to-leading and trailing-to-trailing edges excluding outlying observations by defects, using a time interval analyzer with the output signals from the edge detector of the marks and spaces in a sector. Therefore, independent interval samples for this measurement are limited by the number of marks and spaces in a sector.

© ISO/IEC 2005 All rights reserved

Copyright International Organization for Standardization
Reproduced by IHS under license with ISO
No reproduction or networking permitted without license from IHS
Not for Resale

The timing jitters shall be expressed as a percentage of Channel bit time T. The converter for Channel 1 shall operate correctly for analog signals from embossed marks with amplitudes as determined by Clauses 22 and 23.

The converter for Channel 2 shall operate correctly for analog signals from user-written marks with an amplitude as determined by Clauses 25 and 26.

28.2.5 Channel bit clock

The signals from the analog-to-binary converters shall be virtually locked to the Channel bit clock/clocks which provides/provide the Channel bit windows of 0,70 T effective width for timing the leading and/or trailing edges of the binary signals. Channel bit clock/clocks shall be adjusted in order to minimize the accumulated value/values of the timing errors of the leading to leading, leading to trailing, trailing to leading, and trailing to trailing edges from the Channel bit clock/clocks.

28.2.6 Binary-to-digital converters

The binary signals shall be correctly converted to the data bytes with the binary-to-digital converters based on the sector format and the recording code defined in Clauses 15 and 16.

28.2.7 Error correction

Correction of errors in the data bytes shall be carried out by an error detection and correction system based on the definition in D.3 of Annex D.

28.2.8 Tracking

During measurement of the signals, the focus of the optical beam shall follow the tracks as specified in 20.2.4.

29 Minimum quality of a sector

This Clause specifies the minimum quality of the Header and Recording field of a sector as required for interchange of the data contained in that sector. The quality shall be measured on the Reference Drive specified in 28.2.

A byte error occurs when one or more bits in a byte have a wrong setting, as detected by the ECC and/or CRC circuits (see Annex T for sector retirement guideline).

29.1 Headers

29.1.1 Sector Mark

At least three of the five long marks of the Sector Mark shall have the timing specified in 15.2 and the signals shall have the amplitude specified in 22.1.

29.1.2 ID fields

At least one of the two ID fields in a Header read in Channel 1 shall not have any byte errors, as checked by the CRC in the field.

-`,,`,`-`-`,,`,,`,`,,`---
© ISO/IEC 2005 – All rights reserved
Copyright International Organization for Standardization
Reproduced by IHS under license with ISO
No reproduction or networking permitted without license from IHS
Not for Resale

29.2 User-written data

29.2.1 Recording field

The recording marks in a sector shall start at (240 ± 6) Channel bits from the end of the Pre-Formatted header and shall end at (336 ± 156) Channel bits before the end of the sector.

29.2.2 Byte errors

The user-written data in a sector as read in Channel 2 shall not contain any byte errors that cannot be corrected by the error correction defined in 28.2.7.

29.2.3 Timing jitter

The user-written marks in a sector as read in Channel 2 shall have timing jitters due to the media less than 15 % of the time period T of one Channel bit.

30 Data interchange requirements

A disk offered for interchange of data shall comply with the following requirements.

30.1 Tracking

The focus of the optical beam shall not jump tracks unintentionally.

30.2 User-written data

Any sector written in the rewritable zone that does not comply with Clauses 29.1 and 29.2 shall have been replaced according to the rules of the defect management as defined in Clause 19.

30.3 Quality of disk

The quality of the disk is reflected in the number of replaced sectors. (See Clause 19).

© ISO/IEC 2005 All rights reserved

Copyright International Organization for Standardization
Reproduced by IHS under license with ISO
No reproduction or networking permitted without license from IHS
Not for Resale

Annex A
(normative)

Edge distortion test

A.1 The distortion test checks if the case is free from unacceptable distortions and protrusions along its edges. The test is made by causing the cartridge to pass through the vertical slot of a gauge while applying a specified force including the gravitational pull.

A.2 The gauge shall be made of a suitable material, e.g. of chrome-plated carbon steel. The inner surfaces shall be polished to a surface finish of 5 µm peak-to-peak.

A.3 The dimensions shall be as follows (see Figure A.1):

L_a = 96,0 mm min.

L_b = 91,0 mm ± 0,1 mm

$L_c = 8{,}6 \text{ mm}^{+0{,}1 \text{ mm}}_{-0{,}0 \text{ mm}}$

L_d = 6,30 mm ± 0,01 mm

L_e = 6,80 mm min.

A.4 When the cartridge is inserted vertically into the gauge, a vertical downward force F_i of 0,8 N maximum applied to the centre of the top edge of the cartridge shall cause the cartridge to pass through the gauge.

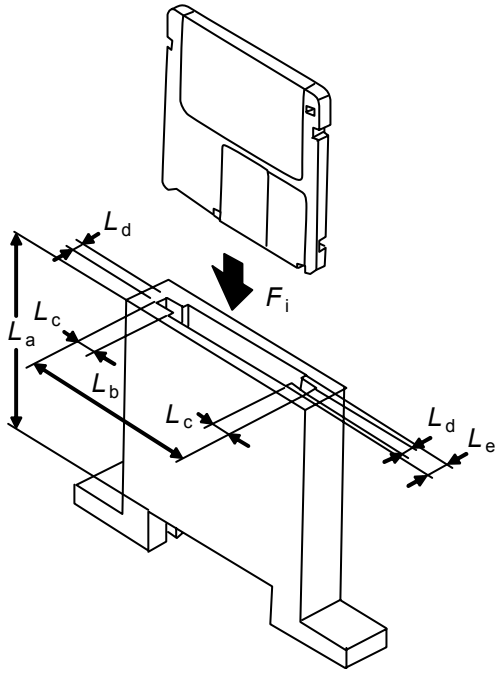

Figure A.1 – Distortion Gauge

© ISO/IEC 2005 – All rights reserved
Copyright International Organization for Standardization
Reproduced by IHS under license with ISO
No reproduction or networking permitted without license from IHS
Not for Resale

Annex B
(normative)

Compliance test

B.1 The compliance test checks the flatness and flexibility of the case by forcing the four reference surfaces of the case into a plane. The test is made by placing the cartridge on the supports of a gauge and applying forces on the cartridge opposite to the supports.

B.2 The location of the four reference surfaces S1, S2, S3 and S4 is defined in 10.3.4 and Figure 4.

B.3 The test gauge consists of a base plate on which four posts P1, P2, P3 and P4 are fixed so as to correspond to the four surfaces S1, S2, S3 and S4, respectively (see Figure B.1). The dimensions are as follows (see Figure B.2):

Posts P1 and P2

$D_a = 6{,}50 \text{ mm} \pm 0{,}01 \text{ mm}$

$D_b = 3{,}50 \text{ mm} \begin{matrix} +0{,}00 \text{ mm} \\ -0{,}02 \text{ mm} \end{matrix}$

$H_a = 1{,}0 \pm 0{,}1 \text{ mm}$

$H_b = 2{,}0 \text{ mm max.}$

The top area (H_b - H_a) of posts P1 and P2 has a chamfer.

Posts P3 and P4

$D_c = 5{,}50 \text{ mm} \pm 0{,}01 \text{ mm}.$

After assembly, the upper annular surfaces of the four posts shall lie between two horizontal planes spaced 0,01 mm apart.

B.4 The cartridge shall be placed with its reference surfaces onto the posts of the horizontal gauge. A vertical downward force F_c of 0,4 N shall be exerted on the cartridge opposite each of the four posts.

B.5 Requirements

Under the conditions of B.4, three of the four surfaces S1 to S4 shall be in contact with the annular surface of their respective posts, and any gap between the remaining surface S and the annular surface of its post shall not exceed 0,1 mm.

© ISO/IEC 2005 All rights reserved
Copyright International Organization for Standardization
Reproduced by IHS under license with ISO
No reproduction or networking permitted without license from IHS
Not for Resale

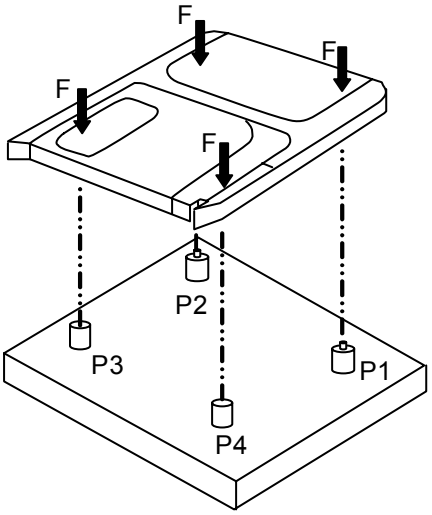

Figure B.1 – Compliance gauge

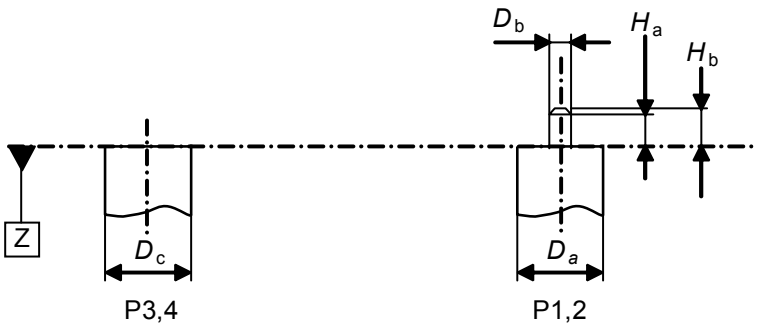

Figure B.2 – Detail of posts

© ISO/IEC 2005 – All rights reserved
Copyright International Organization for Standardization
Reproduced by IHS under license with ISO
No reproduction or networking permitted without license from IHS
Not for Resale

Annex C
(normative)

CRC for ID fields

The 16 check bits of the CRC of the ID field shall be computed over the first three bytes of this field. The generator polynomial shall be

$$G(x) = x^{16} + x^{12} + x^5 + 1$$

The residual polynomial is defined by

$$R(x) = \left(\sum_{i=8}^{i=23} \overline{b}_i x^i + \sum_{i=0}^{i=7} b_i x^i \right) x^{16} mod G(x)$$

where b_i denotes a bit of the first three bytes and $\overline{b_i}$ an inverted bit. Bit b_{23} is the highest order bit of the first byte.

The contents of the 16 check bits c_k of the CRC are defined by

$$R(x) = \sum_{k=0}^{k=15} c_k x^k$$

c_{15} is recorded in the highest order bit of the fourth byte in the ID field.

--`,,`,`-`-`,,`,,`,`,,`---

© ISO/IEC 2005 All rights reserved

Copyright International Organization for Standardization
Reproduced by IHS under license with ISO
No reproduction or networking permitted without license from IHS
Not for Resale

Annex D
(normative)

Interleave, CRC, ECC, Resync for the data field

D.1 Interleave

D.1.1 Interleave for 2 048-byte sectors

The different bytes shall be designated as follows:

D_n are user data bytes

C_k are CRC check bytes

$E_{s,t}$ are ECC check bytes

Fm with non specified content, set to (FF)

These bytes shall be ordered in a sequence A_n in the order in which they shall be recorded on the disk. This order is the same as that in which they are input into the controller. Depending on the value of n, these elements are:

for $1 \le n \le 2\,048$: $A_n = D_n$

for $2\,049 \le n \le 2\,056$: $A_n = F_m$

for $2\,057 \le n \le 2\,060$: $A_n = C_k$

for $2\,061 \le n \le 2\,380$: $A_n = E_{s,t}$

where:

$k = n - 2\,056$

$s = [\,(n - 2\,061) \bmod 20\,] + 1$

$t = \text{int}\left[\frac{n - 2061}{20}\right] + 1$

The notation int $[x]$ denotes the largest integer not greater than x.

The first three parts of A_n are 20-way interleaved by mapping them onto a two-dimensional matrix B_{ij} with 102 rows and 20 columns. Thus

for $1 \le n \le 2\,060$: $B_{ij} = A_n$

where:

$i = 102 - \text{int}\left[\frac{n - 1}{20}\right]$

$j = (n - 1) \bmod 20$

--`,,`,,`-`-`,,`,,`,`,,`---
Copyright International Organization for Standardization
Reproduced by IHS under license with ISO
No reproduction or networking permitted without license from IHS
© ISO/IEC 2005 – All rights reserved
Not for Resale

D.1.2 Interleave for 512-byte sectors

For 512-byte sectors the sequence of bytes shall be denoted by A'_n, the other notations shall be as specified in D.1.1.

for $1 \le n \le 512$: $A'_n = D_n$

for $513 \le n \le 516$: $A'_n = F_m$

for $517 \le n \le 520$: $A'_n = C_k$

for $521 \le n \le 600$: $A'_n = E_{s,t}$

where:

$k = n - 516$

$s = [\,(n - 521) \bmod 5\,] + 1$

$t = \text{int}\left[\frac{n-521}{5}\right] + 1$

The first four parts of A'_n are 5-way interleaved by mapping them onto a two-dimensional matrix B'_{ij} with 103 rows and 5 columns. Thus:

for $1 \le n \le 520$ $B'_{ij} = A'_n$

where:

$i = 103 - \text{int}\left[\frac{n-1}{5}\right]$

$j = (n - 1) \bmod 5$

D.2 CRC

D.2.1 General

The CRC and the ECC shall be computed over the Galois field based on the primitive polynomial

$$G_p(x) = x^8 + x^5 + x^3 + x^2 + 1$$

The generator polynomial for the CRC bytes shall be

$$G_C(x) = \prod_{i=136}^{i=139} \left(x + \alpha^i\right)$$

where the element $\alpha^i = (ß^i)^{88}$, with ß being a primitive root of Gp(x). The value of the n-th bit in a byte is the coefficient of the n-th power of ß, where $0 \le n \le 7$, when ß is expressed on a polynomial basis.

D.2.2 CRC for 2 048-byte sectors

The four check bytes of the CRC shall be computed over the user data and the eight (FF) bytes.

The information polynomial shall be

$$I_C(x) = \left[\sum_{i=1}^{i=102} \left(\sum_{j=0}^{j=19} \left(B_{i,j}\right) x^i\right)\right] + \sum_{j=0}^{j=15} \left(B_{0,j}\right) x^0$$

© ISO/IEC 2005 All rights reserved

Copyright International Organization for Standardization
Reproduced by IHS under license with ISO
No reproduction or networking permitted without license from IHS
Not for Resale

The contents of the four check bytes C_k of the CRC are defined by the residual polynomial

$$R_C(x) = I_C(x)x^4 \ \ mod \ \ G_C(x)$$

$$R_C(x) = \sum_{k=1}^{k=4} C_k \, x^{4-k}$$

The last equation specifies the storage locations for the coefficients of the polynomial.

D.2.3 CRC for 512-byte sectors

The four check bytes of the CRC shall be computed over the user data and the four (FF) bytes. The information polynomial shall be

$$I'_c(x) = \left[\sum_{i=1}^{i=103} \left(\sum_{j=0}^{j=4} B'_{i,j} \right) x^i \right] + (B'_{0,0})x^0$$

The contents of the four CRC check bytes shall be calculated as specified in D.2.2, however using polynomial $I'_c(x)$.

D.3 ECC

The primitive polynomial $G_p(x)$ and the elements α^i and ß shall be as specified in D.2.1. The generator polynomial for the check bytes of the ECC shall be

$$G_E(x) = \prod_{i=120}^{i=135} \left(x + \alpha^i \right)$$

This polynomial is self-reciprocal. This property can be used to reduce the hardware size. The initial setting of the ECC register shall be all ZEROs. The bits of the computed check bytes shall be inverted before they are encoded into Channel bits.

D.3.1 ECC for 2 048-byte sectors

The 320 check bytes of the ECC shall be computed over the user bytes, the eight (FF) bytes and the CRC bytes. The corresponding 20 information polynomials shall be:

$$I_{E\,j}(x) = \sum_{i=0}^{i=102} \left(B_{i,j} \right) x^i$$

where $0 \le j \le 19$

The contents of the 16 check bytes $E_{s,t}$ for each polynomial $I_{Ej}(x)$ are defined by the residual polynomial

$$R_{E\,j}(x) = IE_j(x)x^{16} \ \ mod \ \ G_E(x)$$

$$R_{E\,j}(x) = \sum_{t=1}^{t=16} E_{j+1,t} \, x^{16-t}$$

The last equation specifies the storage locations for the coefficients of the polynomials.

© ISO/IEC 2005 – All rights reserved
Copyright International Organization for Standardization
Reproduced by IHS under license with ISO
No reproduction or networking permitted without license from IHS
Not for Resale

D.3.2 ECC for 512-byte sectors

The 80 check bytes of the ECC shall be computed over the user data bytes, the four (FF) and the CRC bytes. The corresponding 5 information polynomials shall be:

$$I'_{Ej}(x) = \sum_{i=0}^{i=103} \left(B'_{i,j} \right) x^i$$

where $0 \leq j \leq 4$.

The calculation of the 16 check bytes for each of the information polynomials $I_{Ej}(x)$ shall be carried out as specified in D.3.1.

D.4 Resync

The Resync fields (see Annex F) shall be inserted in the Data field to prevent loss of synchronization and to limit the propagation of errors in the user data. They are numbered consecutively and shall contain one of the following pattern of Channel bits.

0X0 100 000 001 000 000 100 00Y

0X0 100 000 001 000 000 101 00Y

Where X and Y are set to ZERO or ONE based on the preceding or following data patterns.

For 2 048-byte sectors, a field RS_n shall be inserted between bytes A_{60n} and A_{60n+1},

where $1 \leq n \leq 39$,

For 512-byte sectors, a field RS_n shall be inserted between bytes A_{20n} and A_{20n+1},

where $1 \leq n \leq 29$.

D.5 Recording sequence for the Data field

The elements of the Data field shall be recorded on the disk according to sequence A_n or A'_n, as applicable, immediately following the Sync bytes and with the Resync bytes inserted as specified in D.4.

Figures D.1 shows in matrix form the arrangement of these elements. The sequence of recording is from left-to-right and top-to-bottom

SB	designates a Sync byte
D	designates a user byte
RS	designates a Resync byte
C	designates a check byte for CRC
E	designates a check byte for ECC
Fm	designates a (FF) byte

For 2 048-byte sectors (Figure D.1) the first 102 columns contain in rows 0 to 19 the user bytes, the eight (FF) bytes and the CRC check bytes. The next 16 columns contain only the ECC check bytes.

For 512-byte sectors (Figure D.2) the first 103 columns contain in rows 0 to 4 the user bytes, the four (FF) bytes and the CRC check bytes. The next 16 columns contain only the ECC check bytes.

© ISO/IEC 2005 All rights reserved

Copyright International Organization for Standardization
Reproduced by IHS under license with ISO
No reproduction or networking permitted without license from IHS
Not for Resale

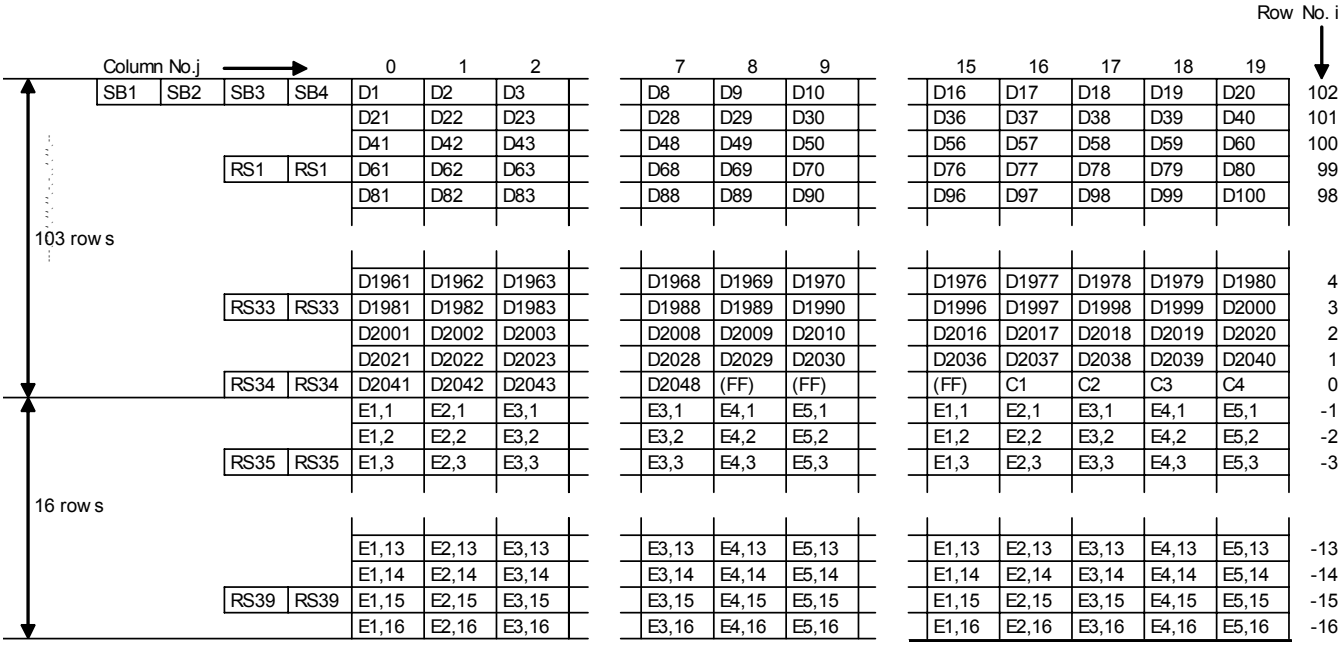

Figure D.1 – Data field configuration, 2 048-byte sectors, ECC with 20-way interleave

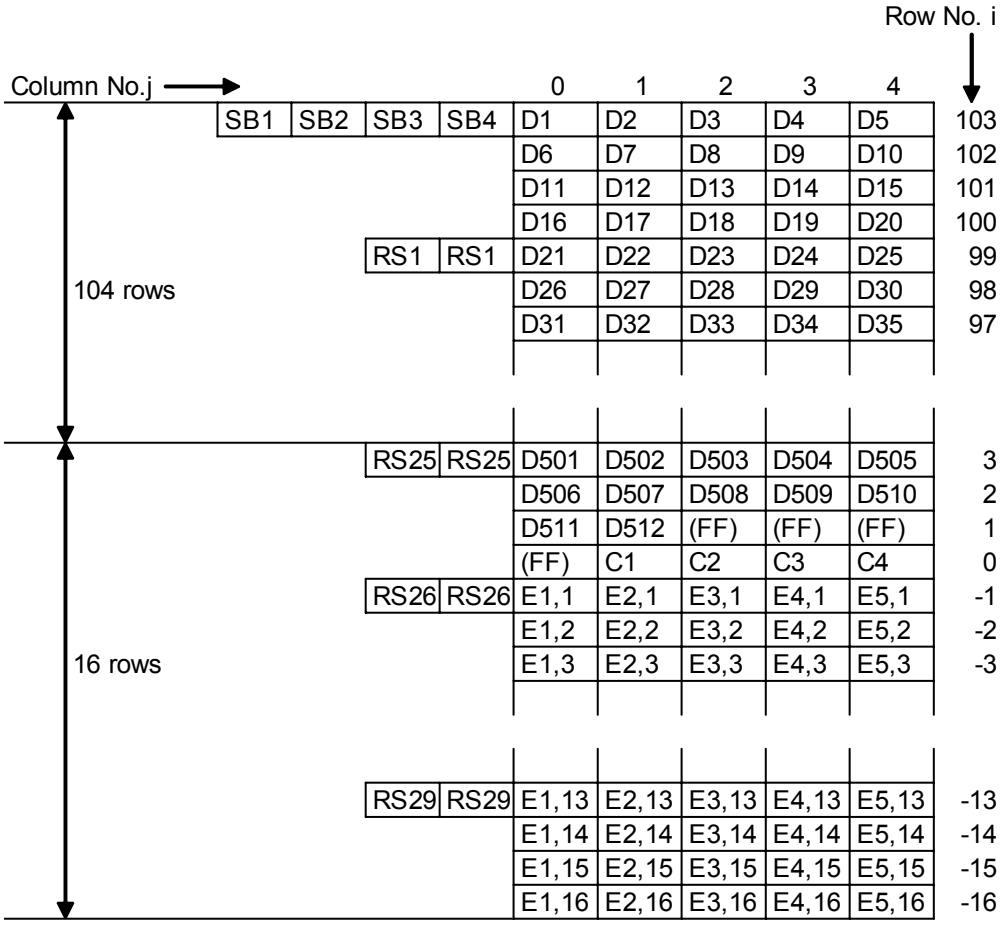

Figure D.2 – Data field configuration, 512-byte sectors, ECC with 5-way interleave

Copyright International Organization for Standardization
Reproduced by IHS under license with ISO
No reproduction or networking permitted without license from IHS
© ISO/IEC 2005 – All rights reserved
Not for Resale

Annex E
(normative)

Contents of the Control Zone

E.1 Media characterization data

Byte 0: Format Descriptor 1

This byte shall be set to 0110 0010, indicating Continuous Composite Servo tracking, Logical ZCAV Rotational Recording mode, (1, 7) RLL mark edge modulation.

Byte 1: Format Descriptor 2

This byte shall be set to 0010 0011 indicating Reed-Solomon Long Distance Code of degree 16 with a 20-way interleave for 2 048 bytes user data per sector.

Byte 2: Sectors per logical track

This byte shall be set to 0001 0001, indicating 17 sectors per logical track.

Byte 3: Reflectance

This byte shall specify the disk manufacturer's specification of the reflectance R of the disk, expressed as a fraction, when measured at a nominal wavelength of 685 nm. It is specified as a number n such that

$n = 100\ R$

Byte 4: On-land or in-groove recording

This byte shall be set to 1100 0000, indicating on-land and in-groove recording.

Byte 5: Reserved

This byte shall be set to (FF).

Byte 6: Maximum read power

This byte shall specify the lowest of the values specified in bytes 21 to 23 of the Control Zone. It specifies the maximum read power P_r, in milliwatts, permitted for reading the Control Zone. It is specified as a number n such that

$n = 20\ P_r$

and n shall be larger than 26.

Byte 7: Media type

The allowed settings of this byte shall be

0010 0010: indicates Type R/W(necessary to apply magnetic field for reading data)

Other settings of this byte are prohibited by this Standard, they are reserved for future standardization. (See Annex R).

© ISO/IEC 2005 All rights reserved

Copyright International Organization for Standardization
Reproduced by IHS under license with ISO
No reproduction or networking permitted without license from IHS
Not for Resale

Bytes 8, 9: Last track in the Data Zone

These bytes shall be set to 0111 1110 / 1101 0111, respectively, indicating the MSB, LSB of the track number of the last track in the Data Zone, viz. 32 471.

Byte 10: Polarity of the figure of merit

This byte shall be set to 0000 0001, indicating that the polarity is negative.

Byte 11: Magnitude of the figure of merit

This byte shall indicate the magnitude of the figure of merit F, specified as a number n, such that

$n = 10\ 000\ F$

Byte 12: Track pitch

This byte shall specify the track pitch, t_p, in micrometers, as a number n, such that

$n = 100\ t_p$,

and be set to (43) representing a track pitch of 0,67 μm.

Byte 13: Reserved

These bytes shall be set to (FF).

Bytes 14 to 17: Unspecified

These bytes may be used for manufacturer identification. They shall be ignored in interchange.

E.2 Recording control data

Byte 18 to 45 shall specify the conditions for wavelength L_1 = 665 nm, Baseline reflectance R_1, and the Rotational Frequency N_1 = 50 Hz.

For each value of N one set of write power for the 4T mark is given. It contains a value for the inner, middle and outer radius. All values specified in byte 18 to 45 shall be such that the requirements of 11.5 and Clauses 24 and 25 are met.

Byte 18: Wavelength

This byte shall specify the wavelength L_1, in nanometres, of the drive as a number n such that

$n = 1/5\ L_1$.

This byte shall be set to n = 133.

Byte 19: Reflectance

This byte shall specify the reflectance R_1 of the disk measured at wavelength L_1 as a number n such that

$n = 100\ R_1$.

The value of n shall be equal to that recorded in byte 3.

© ISO/IEC 2005 – All rights reserved
Copyright International Organization for Standardization
Reproduced by IHS under license with ISO
No reproduction or networking permitted without license from IHS
Not for Resale

Byte 20: Rotational frequency

This byte shall specify the rotational frequency N_1 in hertz of the disk as a number n such that

$n = N_1$.

This byte shall be set to $n = 50$.

Byte 21 to 23: Maximum read power for the Information Zone

This byte shall specify the maximum read power P_r, in milliwatts at radii 24 mm, 32 mm and 41,5 mm, in the Information Zone under condition L_1 and N_1, expressed as a number n such that

$n = 20\ P_r$

where n shall be not exceed 150.

Byte 24: Polarity of the read magnetic field

This byte shall be set to 1111 1110, indicating that the read magnetic field pointing in the North to South direction shall be applied from the entrance surface to the recording layer.

Byte 25: Magnitude of the read magnetic field

This byte shall indicate the magnitude of the read magnetic field H_r in A/m, specified as a number n, such that

$n = 1/1\ 000\ H_r$

Bytes 26 to 30: Reserved

These bytes shall be set to (FF).

Bytes 31 to 33: Write power

These bytes shall specify the write powers P_w in milliwatts at radii 24 mm, 32 mm and 41,5 mm respectively as such a number n that

$n = 5\ P_w$

Byte 34: Polarity of the write magnetic field

This byte shall be set to 1111 1110, indicating that the write magnetic field pointing in the North to South direction shall be applied from the entrance surface to the recording layer.

Byte 35: Magnitude of the write magnetic field

This byte shall indicate the magnitude of the write magnetic field H_w in A/m, specified as a number n, such that

$n = 1/1\ 000\ H_w$

Bytes 36 to 40: Reserved

These bytes shall be set to (FF).

© ISO/IEC 2005 All rights reserved

Copyright International Organization for Standardization
Reproduced by IHS under license with ISO
No reproduction or networking permitted without license from IHS
Not for Resale

Bytes 41 to 43: Erase power

These bytes shall specify the erase power P_e in milliwatts at radii 24 mm, 32 mm and 41,5 mm respectively as such a number *n* that

$n = 5\ P_e$

Byte 44: Polarity of the erase magnetic field

This byte shall be set to 0000 0001, indicating that the erase magnetic field pointing in the North to South direction shall be applied from the recording layer to the entrance surface.

Byte 45: Magnitude of the erase magnetic field

This byte shall indicate the magnitude of the erase magnetic field H_e in A/m, specified as a number *n*, such that

$n = 1/1\ 000\ H_e$

Byte 46-379: Reserved

These bytes shall be set to (FF).

E.3 System data

Bytes 380 to 387: Reserved

These bytes shall be set to (FF).

Bytes 388 to 389: Number of logical Tracks in the First Data Band

These bytes shall be set to 0000 1101 / 1101 1110, respectively, indicating the MSB, LSB of the number of logical tracks in the first data Band, viz. 3 550. The number includes DMA tracks.

Byte 390: Number of Bands

This byte shall be set to 0000 1100 indicating the number of bands12.

Bytes 391: Reserved

This byte shall be set to (FF).

Bytes 392 to 393: Number of physical tracks per Data Band

These bytes shall be set to 0000 0100 / 1011 0111, respectively, indicating the MSB, LSB of the number of physical tracks per Data Band, viz. 1 207.

Bytes 394 to 395: Number of physical tracks per Last Data Band

These bytes shall be set to 0000 0010 / 1110 1100, respectively, indicating the MSB, LSB of the number of physical tracks per Data Band, viz. 748.

Bytes 396 to 479: Reserved

These bytes shall be set to (FF).

--`,,`,`-`-`,,`,,`,`,,`---
© ISO/IEC 2005 – All rights reserved
Copyright International Organization for Standardization
Reproduced by IHS under license with ISO
No reproduction or networking permitted without license from IHS
Not for Resale

Bytes 480 to 511

The contents of these bytes are not specified in this Standard. They may contain an identification of the manufacturer. They shall be ignored in interchange.

Table E.1 – Media Characterization Data

Cont. Byte	2 048-byte sectors	Characteristic
0	(62)	Format Descriptor 1
1	(23)	Format Descriptor 2
2	(11)	Sectors per track
3	N=100 R	Reflectance
4	(C0)	On-land and in-groove recording
5	(FF)	Reserved
6	N=20 P_r	Maximum read power
7	(22)	Media type
8	(7E)	Last track in the Data Zone
9	(D7)	
10	(01)	Polarity of the figure of merit
11	N = 10 000 F	Figure of merit
12	(43)	Track pitch
13	(FF)	Reserved
14 to 17	Xx	Unspecified



Mandatory
Not mandatory

© ISO/IEC 2005 All rights reserved
Copyright International Organization for Standardization
Reproduced by IHS under license with ISO
No reproduction or networking permitted without license from IHS
Not for Resale

Table E.2 – Recording Control Data

18	Wavelength: $n = 1/5\ L_1$
19	Reflectance: $n = 100\ R_1$
20	Rotational frequency: $n = (N_1)$
21	Maximum read power: $n = 20\ P_r$ at r = 24 mm
22	at r = 32 mm
23	at r = 41,5 mm
24	Polarity of the read magnetic field
25	Minimum read magnetic field: $n = 1/1\ 000\ H_r$
26	
27	
28	(FF)
29	
30	
31	Write power: $n = 5\ P_w$ at r = 24 mm
32	at r = 32 mm
33	At r = 41,5 mm
34	Polarity of the write magnetic field
35	Minimum write magnetic field: $n = 1/1\ 000\ H_w$
36	
37	
38	(FF)
39	
40	
41	Erase power: $n = 5\ P_w$ at r = 24 mm
42	at r = 32 mm
43	at r = 41,5 mm
44	Polarity of the erase magnetic field
45	Minimum erase magnetic field: $n = 1/1\ 000\ H_e$
46	
47	
48	(FF)
49	
50	
51 to 379	(FF)

Mandatory
set to (FF)

Copyright International Organization for Standardization
Reproduced by IHS under license with ISO
No reproduction or networking permitted without license from IHS
Not for Resale
© ISO/IEC 2005 – All rights reserved

Table E.3 – System Control Data

Cont. Byte	2 048-byte sectors	Characteristics
380 to 387	(FF)	Reserved
388	(0D)	Number of tracks in the First Data Band
389	(DE)	
390	(0C)	Number of bands
391	(FF)	Reserved
392	(04)	Number of physical tracks per Data Band
393	(B7)	
394	(02)	Number of physical tracks per Last Data Band
395	(EC)	
396 to 479	(FF)	Reserved
480 to 511	Xx	Unspecified

Mandatory

Not mandatory

© ISO/IEC 2005 All rights reserved
Copyright International Organization for Standardization
Reproduced by IHS under license with ISO
No reproduction or networking permitted without license from IHS
Not for Resale

Annex F
(normative)

Determination of the Resync patterns

DSV (Digital Sum Value) is used in the descriptions which follow. Other acronyms include PLL (Phase Lock Loop), PPM (Pulse Position Modulation) and PWM (Pulse Width Modulation).

F.1 Conditions of Resync pattern

The Resync pattern has the following characteristics to satisfy its required function:

1. The Resync pattern is an irregular Channel bit pattern of seven consecutive ZERO bits and a ONE bit followed by six consecutive ZERO bits that does not occur in the (1,7) modulation code.

2. The irregularity of Resync pattern is detectable using either only leading edges or only trailing edges when dual PLL is used.

3. The number of ONEs in a Resync pattern is switchable from odd number to even number or vice versa for minimizing the d.c. level fluctuation of the data pattern in the Data field of a sector.

4. The length of the Resync pattern is two bytes.

F.2 Resync pattern

Selection of one of the two Resync patterns shown below shall be made in order to minimize the d.c. level fluctuation.

The selection criteria are described in F.5.

	Data 1	Resync area	Data 2
		Resync pattern	
Resync 1	0x0	100000001000000100	00y
Resync 2	0x0	100000001000000101	00y

where x = ZERO or ONE
y = ZERO or ONE

© ISO/IEC 2005 – All rights reserved
Copyright International Organization for Standardization
Reproduced by IHS under license with ISO
No reproduction or networking permitted without license from IHS
Not for Resale

F.3 Generation algorithm of the Resync patters

Previous Data 1		RESYNC Area								Next Data 2
Data bits	Channel bits	00	assumed data bits						01	Data bits
		RESYNC Pattern								
x_1 x_2		0x0						z	00y	x_3 x_4
00	0 001	010	100	000	001	000	000	100	001	0x
								0	000	1x
								1	001	0x
								1	000	1x
00	1 001	010	100	000	001	000	000	100	001	0x
								0	000	1x
								1	001	0x
								1	000	1x
01	0 001	010	100	000	001	000	000	100	001	0x
								0	000	1x
								1	001	0x
								1	000	1x
01	1 010	000	100	000	001	000	000	100	001	0x
								0	000	1x
								1	001	0x
								1	000	1x
10	0 101	010	100	000	001	000	000	100	001	0x
								0	000	1x
								1	001	0x
								1	000	1x
10	1 - - -		does not occur							
11	0 010	000	100	000	001	000	000	100	001	0x
								0	000	1x
								1	001	0x
								1	000	1x
11	1 - - -		does not occur							

NOTE 1 x_1 and x_2 are encoded assuming the following information bits are ZERO ZERO

NOTE 2 The values of these information bits are the assumed value for encoding.

NOTE 3 This Channel bit was inverted after encoding in order to generate the irregular pattern

NOTE 4 The value of the last three bits of the Resync area is determined by:

1) the previous Channel bit assumed to be ZERO
2) the two information bits assumed to be ZERO ONE;
3) the state of Data 2 information bit x_3, per the (1,7) encode Table 3.

F.4 Minimization of d.c. level

The criteria for selecting either Resync pattern 1 or Resync pattern 2 in order to minimize the d.c. level fluctuation is based on the Channel bits of the Data area, and 0x0, 00y in the Resync area.

--`,,`,,`-`-`,,`,,`,`,,`---
© ISO/IEC 2005 All rights reserved
Copyright International Organization for Standardization
Reproduced by IHS under license with ISO
No reproduction or networking permitted without license from IHS
Not for Resale

Data	Resync area	Data
Data Block 0x0	Resync pattern: 100000001000000100 (Resync pattern 1) / 100000001000000101 (Resync Pattern 2)	00y Data Block

where x = ZERO or ONE
y = ZERO or ONE

The decision is made to select either Resync pattern 1 or Resync pattern 2 according to the procedure described in F.5.

F.5 Determination of Resync pattern

The Resync pattern to be used shall be determined by the following procedure.

1. Convert the Channel bits described in PPM data into PWM data in order to simplify handling.

   For example, if the PPM data is

   ... 0010100010010 ...

   the PWM data shall be

   ... 0011000011100 ...

The DSV calculation shall be defined in terms of PWM data such that ZERO = -1 and ONE = +1 (See example below).

Example of calculation of Block DSV_m and Resync DSV_m

(1,7) Channel bits (PPM data)	01	00001	0001	0000001	0000
PWM data	0	11111	0000	11111111	00000

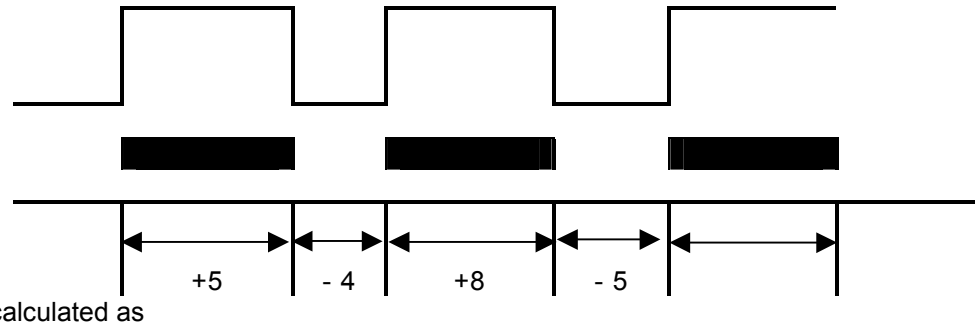

DSV_m is calculated as

$DSV_m = (+5 - 4 + 8 - 5 \ldots)$

2. The Resync area shall be divided into two parts (RS || INV), where both parts are concatenated as follows:

   RS = 0x010000000100000010 in PPM data

   INV = 000y(INV1) or 100y(INV2) in PPM data.

© ISO/IEC 2005 – All rights reserved
Copyright International Organization for Standardization
Reproduced by IHS under license with ISO
No reproduction or networking permitted without license from IHS
Not for Resale

3. The user data field shall be concatenated as

   VFO3 || SYNC || B_0 || RS_1 || INV1 (or INV2) || B_1 || RS_2 || ...

   ... || INV1 (or INV2) || B_m || RS_{m+1} || ... ... || INV1 (or INV2) || B_N

   where

   m = 1 to N

   N = 39

   (See Figure F.1)

4. The DSV(z) function shall be defined such that the argument (z), which is a PPM data stream, shall result in the PWM DSV sum based on the last PWM state of the PWM data preceding the data in the (z) argument.

5. INV1 or INV2 shall be selected in step m using the following algorithm:

   P_0 = DSV(VFO3 || SYNC || B_0 || RS_1)

   $P_m = P_{m-1}$ + DSV(INV1 || B_m ||RS_{m+1})

   or $P_m = P_{m-1}$ + DSV(INV2 || B_m || RS)

   Select INV1 or INV2 to minimize $|P_m|$.

   $P_N = P_{N-1}$ + DSV(INV1 ||B_N)

   or $P_N = P_{N-1}$ + DSV(INV2 ||B_N)

   Select INV1 or INV2 to minimize $|P_N|$.

   This procedure shall be repeated from m = 1 to N, where N = 39.

   If $|P_m|$ is the same for Resync pattern 1 and Resync pattern 2, Resync pattern 1 shall be selected.

© ISO/IEC 2005 All rights reserved

Copyright International Organization for Standardization
Reproduced by IHS under license with ISO
No reproduction or networking permitted without license from IHS
Not for Resale

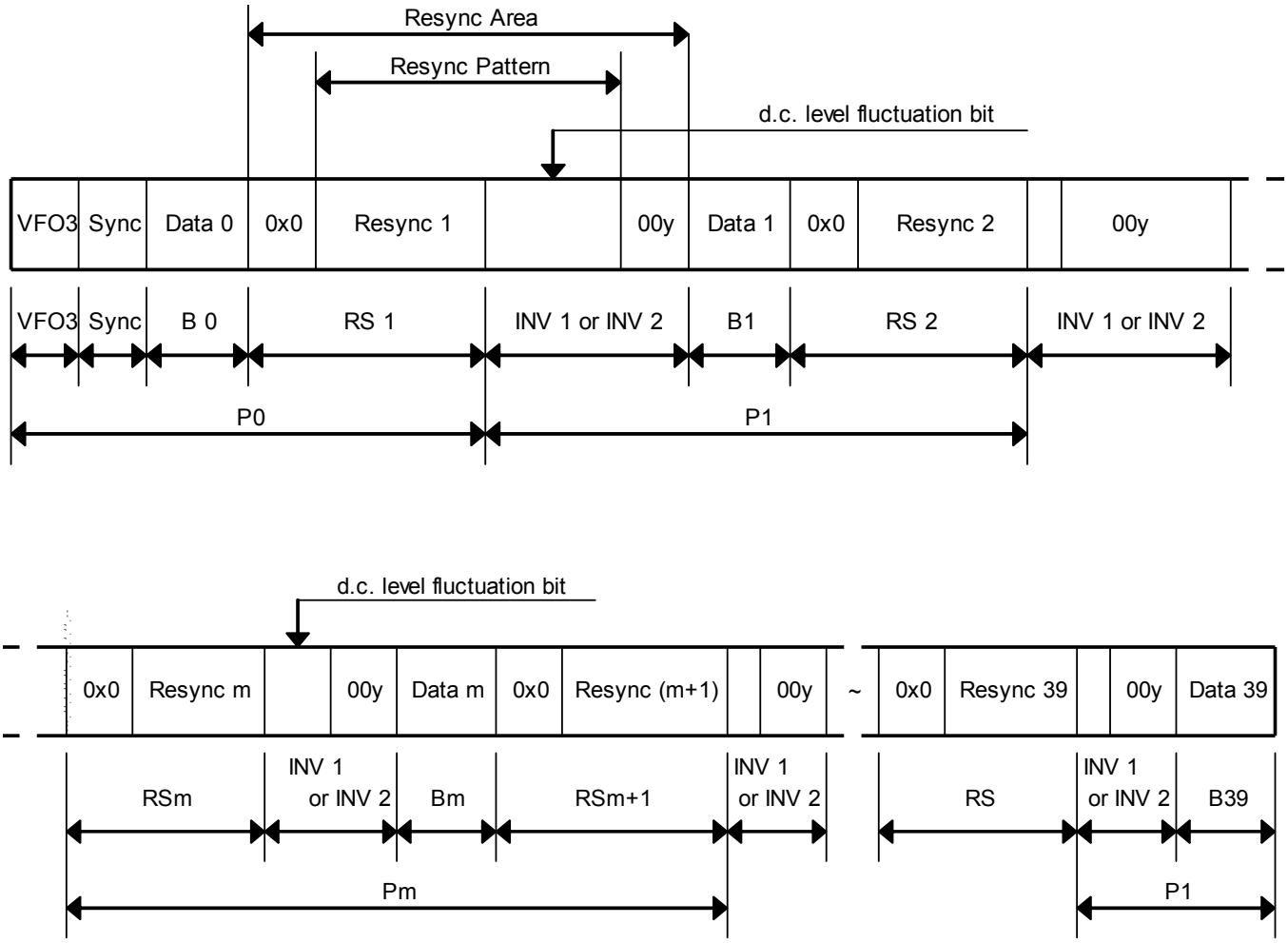

Figure F.1 – Example of Resync byte

Copyright International Organization for Standardization
Reproduced by IHS under license with ISO
No reproduction or networking permitted without license from IHS
© ISO/IEC 2005 – All rights reserved
Not for Resale

Annex G
(normative)

Measurement of the figure of merit

G.1 The figure of merit enables a drive designer to determine the amplitude of the signal in Channel 2 of the drive from magneto-optical marks recorded on the disk at a low spatial frequency in both the radial and tangential direction.

Determination of the figure of merit using a drive as the Reference Drive specified in Clause 9 will not measure media properties only but also the optical retardation of the optical system of the drive. Therefore, a calibration of the drive is needed with a conventional determination of the figure of merit by measuring the reflectance, Kerr rotation and ellipticity. This calibration can only be executed reliably on media with low coercivity.

G.2 The drive shall be calibrated as follows. A test disk with negligible birefringence, e.g. a glass disk, and a low-coercivity magneto-optical layer is used for a conventional determination of the reflectance R, the Kerr rotation θ of the polarization between both opposite states of magnetization of the layer, and the Kerr ellipticity ß. The figure of merit of the media is then

$$F_L = R \sin\theta \cos 2ß.$$

A low-frequency test pattern is written on the same disk. The written domains shall be substantially larger than the focal spot, so as to work in the low spatial frequency region where the modulation transfer function of the optical system is one. This implies that for a disk rotating at 50 Hz, a pattern of long domains with a frequency lower than 100 kHz has to be written on several consecutive tracks, while keeping the marks in neighbouring tracks radially aligned and overlapping.

The pattern is read with the drive to be calibrated. The resulting peak-to-peak amplitude VL of the signal in Channel 2 of the drive is the required calibration constant for this drive.

G.3 The figure of merit of any low- or high-coercivity disk can now be determined on the calibrated drive by writing the above test pattern and reading the peak-to-peak amplitude V of the signal in Channel 2. The figure of merit F of this disk is then

$$F = F_L \frac{V}{VL}$$

© ISO/IEC 2005 All rights reserved
Copyright International Organization for Standardization
Reproduced by IHS under license with ISO
No reproduction or networking permitted without license from IHS
Not for Resale

Annex H
(normative)

Read Channel for measuring NBSNR and jitter

NBSNR and jitter shall be measured by using the following read Channel.

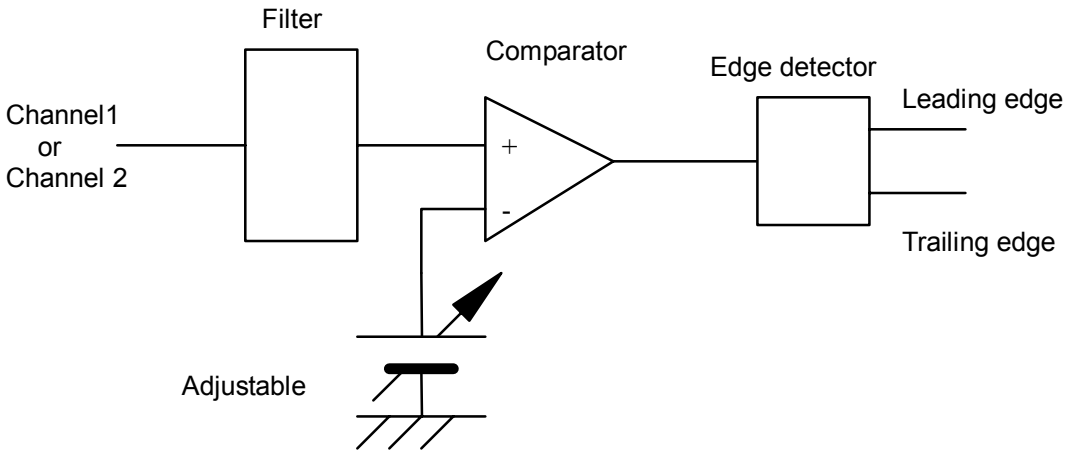

Figure H.1 – Read Channel block diagram

Input signal:

Channel 1, for embossed marks

Channel 2, for user-written marks

Filter specifications:

1) Equalizer: No, for signal evaluation of MO marks
Yes, for signal evaluation of embossed marks

2) Filter type: 5th Bessel function

3) Low pass filter: Cut-off frequency = 2 times the frequency of the 2T tone at the band being tested

H.1 Threshold follower

This tracking threshold follower (or equivalent) shall be used during certain signal measurements as defined in the specific test procedures. A tracking threshold follower is required to establish and maintain the signal baseline level for the data detection process. Its purpose is to compensate for local media variances in reflectivity, recording sensitivity, and for changes in signal d.c. content caused by some recorded data patterns observed during the measurements period.

© ISO/IEC 2005 – All rights reserved
Copyright International Organization for Standardization
Reproduced by IHS under license with ISO
No reproduction or networking permitted without license from IHS
Not for Resale

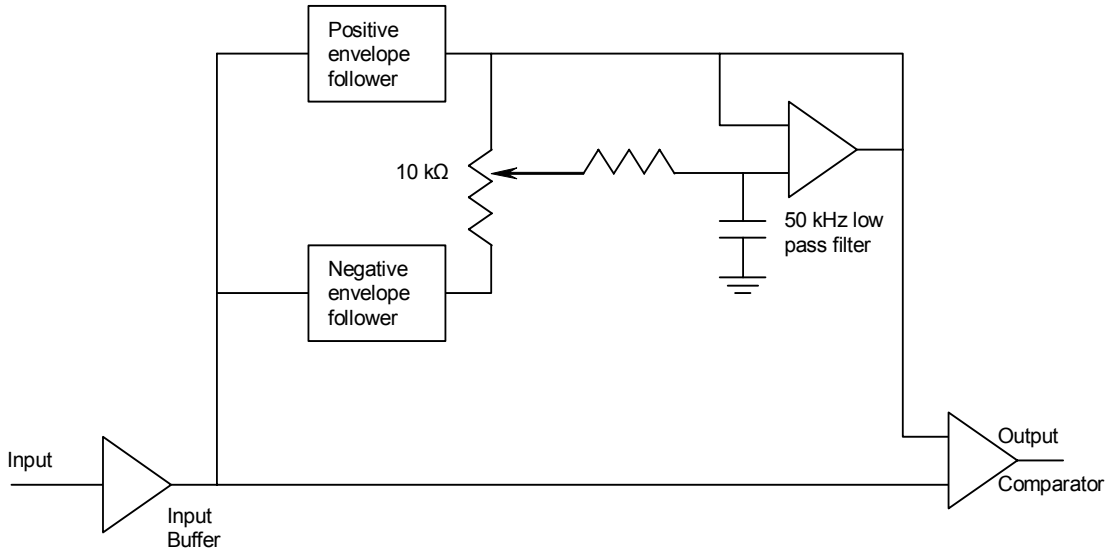

Figure H.2a – Tracking threshold block diagram

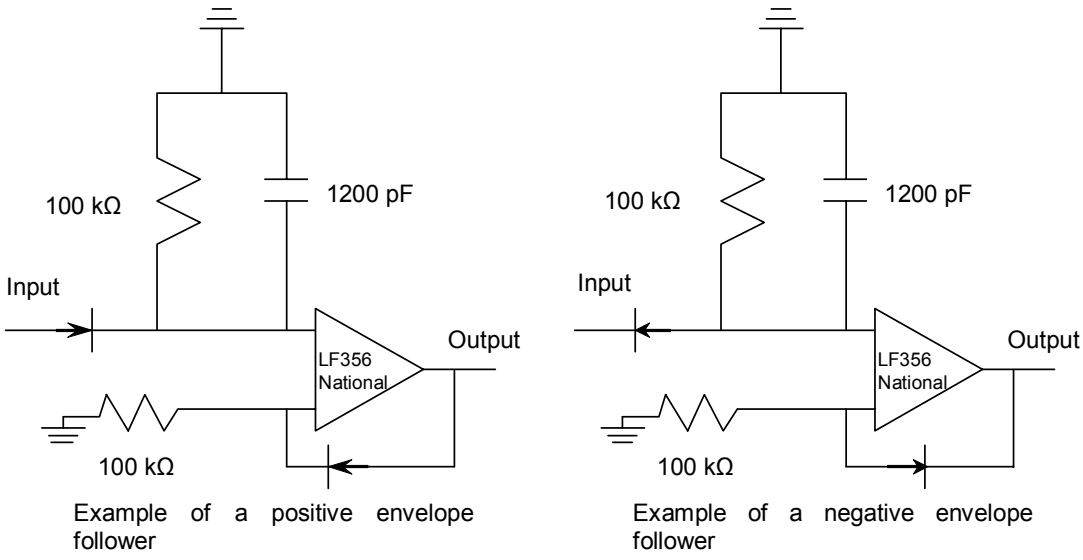

Figure H.2b – Envelope followers using matched diodes

Figure H.2 – Threshold follower

H.2 Timing jitter measuring procedure

The timing jitter of leading-to-leading edge lengths or trailing-to-trailing edge lengths shall be measured using the following procedures.

1) Set the threshold level of the detector circuit such that the 2 T mark and 2 T space of the VFO is exactly 2 Channel bit times T long.
2) Hold the threshold level, and detect the signal edges.
3) Measure the leading-to-leading edge lengths or the trailing-to-trailing edge lengths using a Time Interval Analyzer.

--`,,`,`-`-`,,`,,`,`,,`---
© ISO/IEC 2005 All rights reserved
Copyright International Organization for Standardization
Reproduced by IHS under license with ISO
No reproduction or networking permitted without license from IHS
Not for Resale

4) Acquire 10^5 independent time interval samples excluding the data from defective areas.

5) Calculate the mean value L_n of leading-to-leading edge or trailing-to-trailing edge lengths for each length *n*.

6) Calculate the difference between the measured mean value L_n and the ideal length of corresponding leading-to-leading edge or trailing-to-trailing edge (i.e. *n* times T), and take the maximum value among then as St.

7) Calculate the standard deviation Jt of the timing jitter distribution; the difference between the measured length of leading-to-leading edge or trailing-to-trailing edge and the mean value of corresponding leading-to-leading edge or trailing-to-trailing edge length L_n shall be taken as samples, where Jt and St are shown in Figure H.3.

The leading-to-leading edge lengths and the trailing-to-trailing edge lengths shall be separately examined, and the specifications should be satisfied even in the worst case.

In case of header signal evaluation, the threshold level shall be set using VFO1 and the time interval samples shall be measured using the AM through PA fields.

In case of embossed data signal evaluation, the threshold level shall be set using VFO3 and the time interval samples shall be measured using the Sync and Data field in the user data area, including all time interval samples from user data, CRC, ECC, and Resync.

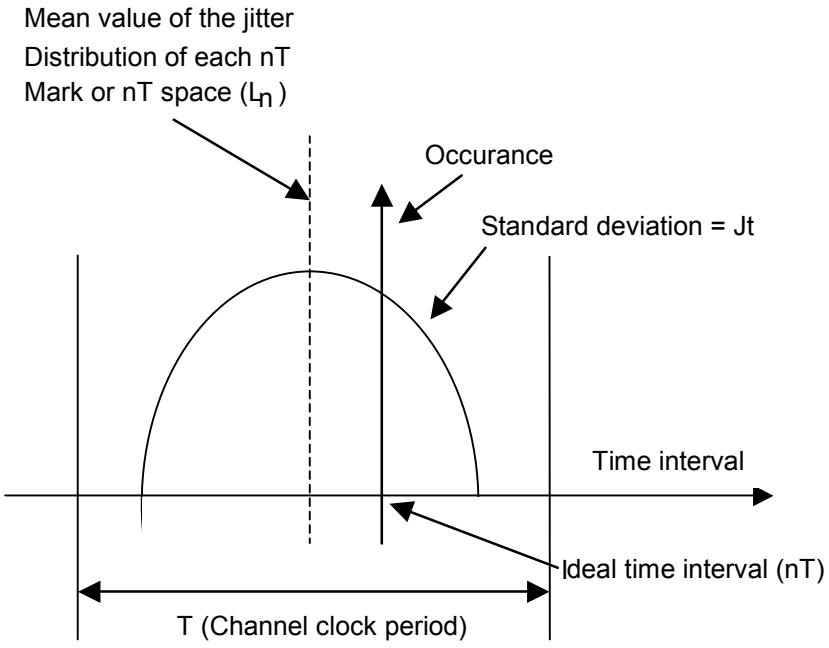

Figure H.3 – Measured distribution of timing jitter

© ISO/IEC 2005 – All rights reserved
Copyright International Organization for Standardization
Reproduced by IHS under license with ISO
No reproduction or networking permitted without license from IHS
Not for Resale

Annex I
(normative)

Implementation Independent Mark Quality Determination (IIMQD) for the interchange of recorded media

I.1 Test patterns

The IIMQD offset test uses two special patterns consisting of seven marks and seven spaces each, one mark and one space of each run length from 2T to 8T, to test the drive's ability to form marks of the proper length for the purposes of media interchange.

The following procedure shall be used to determine IIMQD for the interchange of recorded media.

Erase the tracks and write one of the following test patterns as a group many times on several tracks at the 24 mm, 32 mm, and 41,5 mm radii using the laser power write method of the drive under test. A separate test shall be done for each pattern.

Pattern No. 1:

2T	2T	3T	3T	4T	4T	5T	5T	6T	6T	7T	7T	8T	8T
M	S	M	S	M	S	M	S	M	S	M	S	M	S

Pattern No. 2:

2T	2T	3T	3T	4T	4T	5T	5T	6T	6T	7T	7T	8T	8T
S	M	S	M	S	M	S	M	S	M	S	M	S	M

where M and S stand for mark and space, respectively.

I.2 Detection method

Read and detect the data signal with the following equalization in addition to the detection method given in 24.2.5. The threshold value TV may be varied in this test to compensate for the edge motion of the marks due to parameter variations.

$$Eq(w) = 1 - 2A\cos(\omega \cdot 2T)$$

where: $A = 0{,}1$

$\omega = 2\pi f$

T is the Channel clock period for the zone being read.

This equalizer can be implemented with a five tap, tapped delay line filter having tap weights of -A, 0, 1, 0, -A and 0, -A, 1, -A, 0 and clock periods specified in Table 2 for 24 mm, 32 mm and 41,5 mm radius respectively with a tap delay of 39,4 ns and a disk speed of 3 000 rpm.

Measure the detected signal from the written tracks in two ways using a time interval analyzer:

1) the mean leading-to-trailing edge (mark) lengths

   and

2) the mean trailing-to-leading edge (space) lengths.

--`,,`,,`-`-`,,`,,`,`,,`---
© ISO/IEC 2005 All rights reserved
Copyright International Organization for Standardization
Reproduced by IHS under license with ISO
No reproduction or networking permitted without license from IHS
Not for Resale

Annex J
(normative)

Air cleanliness class 100 000

Air cleanliness class 100 000. The classification of air cleanliness is based on a particle count with a maximum allowable number of specified minimum sized particles per unit volume, and on a statistical average particle size distribution.

J.1 Definition

The particle count shall not exceed a total of 3 500 000 particles per cubic metre of a size 0,5 µm and larger.

The statistical average particle size distribution is given in Figure J.1. Class 100 000 means that 3 500 000 particles per cubic metre of a size of 0,5 µm and larger are allowed, but only 25 000 particles per cubic metre of a size of 5,0 µm and larger.

It should be recognized that single sample distribution may deviate from this curve because of local or temporary conditions. Counts below 350 000 particles per cubic metre are unreliable except when a large number of samplings is taken.

J.2 Test method

For particles of sizes of the 0,5 µm to 5,0 µm, equipment employing light-scattering principles shall be used. The air in the controlled environment is sampled at a known flow rate. Particles contained in the sampled air are passed through an illuminated sensing zone in the optical chamber of the instrument. Light scattered by individual particles is received by a photo detector which converts the light pulses into electrical current pulses. An electronic system relates the pulse height to particle size and counts the pulses such that the number of particles in relation to particle size is registered or displayed.

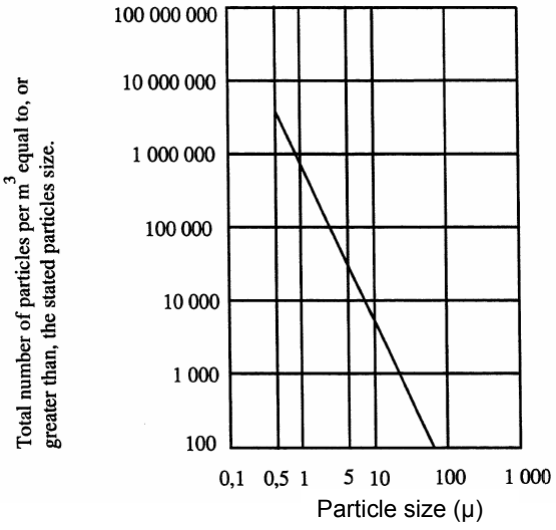

Figure J.1 – Particle size distribution curve

© ISO/IEC 2005 – All rights reserved
Copyright International Organization for Standardization
Reproduced by IHS under license with ISO
No reproduction or networking permitted without license from IHS
Not for Resale

Annex K
(normative)

Position of the cartridge relative to the reference planes

This Annex shows the position of the cartridge relative to the reference planes, as specified in 10.2.

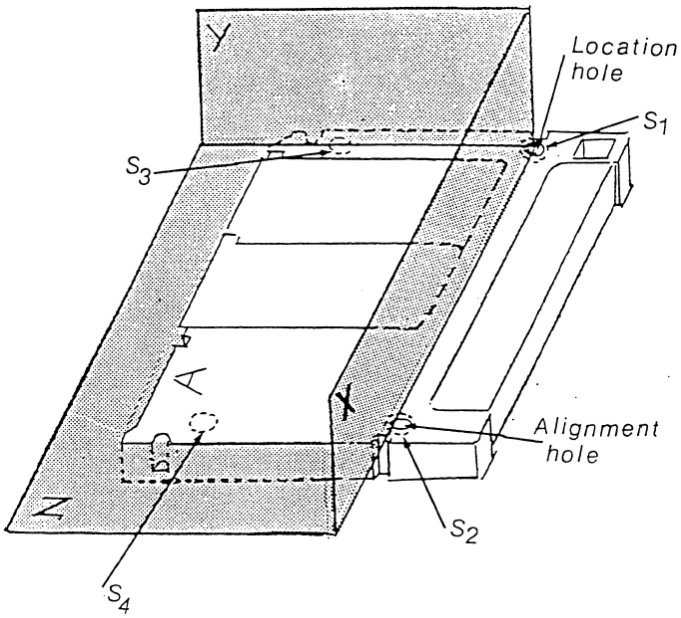

Figure K.1 – Position of the cartridge

© ISO/IEC 2005 All rights reserved
Copyright International Organization for Standardization
Reproduced by IHS under license with ISO
No reproduction or networking permitted without license from IHS
Not for Resale

Annex L
(normative)

Relaxation by zones of the requirements for signals

Table L.1 shows the zones in which the requirements specified in the body of this Standard shall be satisfied and those in which they are relaxed.

indicates the zones in which the values of the signals shall be within the range specified.

indicates the zones in which the range is extended from 80 % of the lower limit to 120 % of the upper limit. The requirement for uniformity is extended from ± 12 % to ± 20 %.

No marking indicates the zones for which the requirements are not applicable.

Table L.1 – Requirements for signals in each zone

CLAUSE	SIGNAL	ZONES								
		BUFFER	TEST		DATA	BUFFER	CONTROL	TEST		INITIAL
			MFG.	DRIVE				DRIVE	MFG.	
11.5.5	Reflectance									
21.1 21.1	DPP (first) DPP (second)									
22.1 22.2 22.3 22.4	SM VFO_1, VFO_2 AM, ID, PA Timing jitter									
23	Embossed Data									
24.2.2 24.2.3 24.3.1 24.3.2 24.3.4 24.4.1 24.4.2	Read Power Read Magnetic Field Write Power Write Magnetic Field Media Sensitivity Erase Power Erase Magnetic Field									
25.1 25.2 26.1 26.2 26.3 26.4	FOM Imbalance Resolution NBSNR Cross Talk Timing Jitter									

© ISO/IEC 2005 – All rights reserved
Copyright International Organization for Standardization
Reproduced by IHS under license with ISO
No reproduction or networking permitted without license from IHS
Not for Resale

Annex M
(normative)

Test method for measuring the adsorbent force of the hub

M.1 Material of the hub

The purpose of this test is to determine the magnetic characteristic of the magnetizable material of the hub.

M.2 Test device

The test device (see Figure M.1) consists of a spacer, a magnet, a back yoke and a centre shaft. The dimensions of the test device are as follows:

D_d = 7,0 mm ± 0,1 mm

D_e = 14,0 mm ± 0,1 mm

D_f = 13,0 mm max.

$D_g = 3{,}9\ \text{mm}\ {}^{+\,0{,}0\ \text{mm}}_{-\,0{,}1\ \text{mm}}$

H_c = 0,40 mm ± 0,01 mm

H_d = 1,00 mm ± 0,05 mm (Typical, to be adjusted to meet the requirement of M.4)

M.3 Material of the test device

The material of the test device shall be:

Magnet: Any suitable magnetic material typically Sm-Co

Back yoke: Any suitable magnetizable material

Spacer: Non-magnetizable material or air gap

Centre shaft: Non-magnetizable material

M.4 The characteristics of the magnet with back yoke

Number of poles : 4 (Typical)

Maximum energy product (BH_{max}) : 175 kJ/m^3 ± 16 kJ/m^3 (Typical)

The characteristics of the magnet with back yoke shall be adjusted by the use of a pure nickel plate with the following dimensions (see Figure M.2), and the adsorbent force of this plate at the point of H_c = 0,4 mm when spaced from the magnet surface shall be 3,3 N ± 0,2 N.

D_h = 6,0 mm ± 0,1 mm

D_i = 15,0 mm ± 0,1 mm

H_e = 1,00 mm ± 0,05 mm

© ISO/IEC 2005 All rights reserved

Copyright International Organization for Standardization
Reproduced by IHS under license with ISO
No reproduction or networking permitted without license from IHS
Not for Resale

M.5 Temperature requirements

The test shall be carried out at the temperature as specified in 8.1.1.

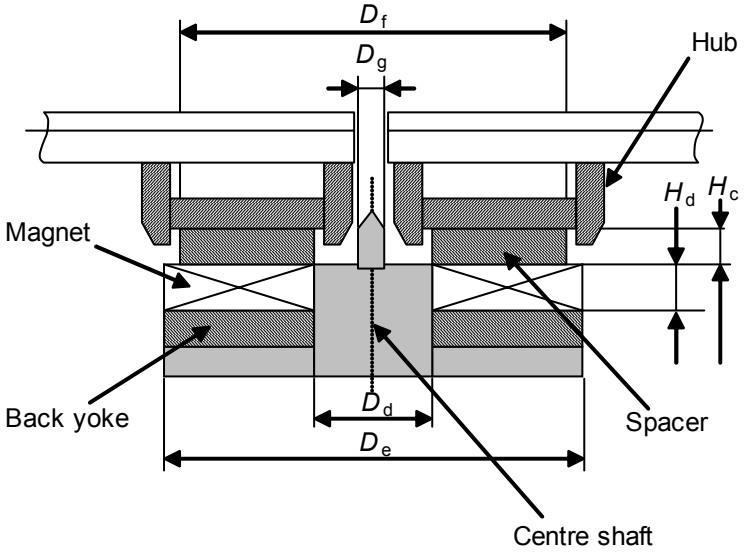

Figure M.1 – Test device for the clamping characteristic of the hub

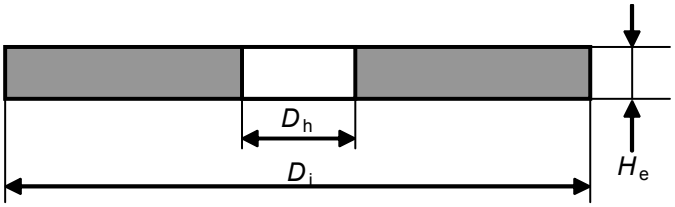

Figure M.2 – Calibration plate of the test device

© ISO/IEC 2005 – All rights reserved
Copyright International Organization for Standardization
Reproduced by IHS under license with ISO
No reproduction or networking permitted without license from IHS
Not for Resale

Annex N
(informative)

Track deviation measurement

The deviation of a track from its nominal location is measured in the same way as a drive sees a track, i.e. through a tracking servo. The strength of the reference servo used for the test is in general less than the strength of the same servo in a normal drive. The difference in strength is intended for margins in the drive. The deviation of the track is related to the tracking error between the track and the focus of the optical beam, remaining after the reference servo. The tracking error directly influences the performance of the drive, and is the best criterion for testing track deviations.

The specification of the axial and radial track deviations can be described in the same terms. Therefore, this Annex applies to both axial and radial track deviations.

N.1 Relation between requirements

The acceleration required by the motor of the tracking servo to make the focus of the optical beam follow the tracks on the disk (see 11.4.6 and 11.4.8) is a measure for the allowed deviations of the tracks. An additional measure is the allowed tracking error between the focus and the track (see 20.2.4). The relation between both is given in Figure N.1, where the maximum allowed amplitude of a sinusoidal track deviation is given as function of the frequency of the deviation. It is assumed in the Figure that there is only one sinusoidal deviation present at a time.

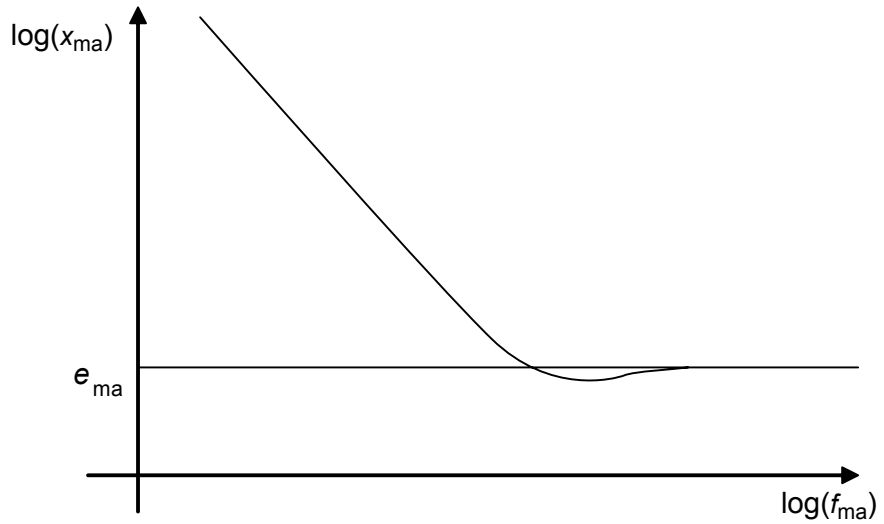

Figure N.1 – Maximum allowed amplitude of a single, sinusoidal track deviation

At low frequencies, the maximum allowed amplitude x_{max} is given by

$$x_{max} = \frac{a_{max}}{(2\pi f)^2} \quad (1)$$

where a_{max} is the maximum acceleration of the servo motor. At high frequencies we have

$$x_{max} = e_{max} \quad (2)$$

where e_{max} is the maximum allowed tracking error. The connection between both frequency regions is given in N.3.

© ISO/IEC 2005 All rights reserved

Copyright International Organization for Standardization
Reproduced by IHS under license with ISO
No reproduction or networking permitted without license from IHS
Not for Resale

N.2 Reference Servo

The above restriction of the track deviations is equal to the restriction of the track deviations for a Reference Servo. A Reference Servo has a well-defined transfer function, and reduces a single, sinusoidal track deviation with amplitude x_{max} to a tracking error e_{max} as in Figure N.1.

The open-loop transfer function of the Reference Servo shall be

$$H_s(\mathrm{i}\omega) = \frac{1}{\mathrm{c}} \times \left(\frac{\omega_0}{\mathrm{i}\omega}\right)^2 \times \frac{1 + \frac{\mathrm{i}\omega\mathrm{c}}{\omega_0}}{1 + \frac{\mathrm{i}\omega}{\mathrm{c}\omega_0}} \tag{3}$$

where i = $\sqrt{-1}$, $\omega = 2\pi$ f and $\omega 0 = 2\pi$ f0, with f0 the 0 dB frequency of the open-loop transfer function. The constant c gives the cross-over frequencies of the lead-lag network of the servo: the lead break frequency f1 = f0 / c and the lag break frequency f2 = f0 × c. The reduction of a track deviation x to a tracking error e by the reference servo is given by

$$\frac{e}{x} = \frac{1}{1 + Hs} \tag{4}$$

If the 0 dB frequency is specified as

$$\omega_0 = \sqrt{\frac{a_{max}\mathrm{c}}{e_{max}}} \tag{5}$$

then a low-frequency track deviation with an acceleration a_{max} will be reduced to a tracking error e_{max}, and a high-frequency track deviation will not be reduced. The curve in Figure N.1 is given by

$$x_{max} = e_{max} \mid 1 + H_S \mid \tag{6}$$

The maximum acceleration required from the motor of this reference servo is

$$a_{max}(\text{motor}) = e_{max}\, \omega^2 \mid 1 + H_S \mid \tag{7}$$

At low frequencies ($f < f_0$ / c) applies

$$a_{max}(\text{motor}) = a_{max}(\text{track}) = \frac{\omega_0{}^2 e_{max}}{\mathrm{c}} \tag{8}$$

Hence, it is permitted to use a_{max} (motor) as specified for low frequencies in 11.4.6 and 11.4.8 for the calculation of ω_0 of a reference servo.

N.3 Requirement for track deviations

The track deviations shall be such that, when tracking with a Reference Servo on a disk rotating at the specified frequency, the tracking error shall not be larger than e_{max} during more than 7,2 µs.

The open-loop transfer function of the Reference Servo for axial and radial tracking shall be given by equation (3) within an accuracy such that |1 + *H*| does not differ by more than ± 20 % from its nominal value in a bandwidth from 50 Hz to 170 kHz. The constant c shall be 3. The 0 dB frequency $\omega_0 / (2\pi)$ shall be given by equation (5), where a_{max} and e_{max} for axial and radial tracking are specified in 20.2.4, 11.4.6 and 11.4.8.

© ISO/IEC 2005 – All rights reserved
Copyright International Organization for Standardization
Reproduced by IHS under license with ISO
No reproduction or networking permitted without license from IHS
Not for Resale

N.4 Measurement implementation

Three possible implementations for an axial or radial measurement system have been given below. H_a is the open-loop transfer function of the actual tracking servo of the drive, H_S is the transfer function for the Reference Servo as given in equation (3). *x* and *y* are the position of the track and the focus of the optical beam. e_S is the tracking error after a Reference Servo, which signal has to be checked according to the previous paragraph.

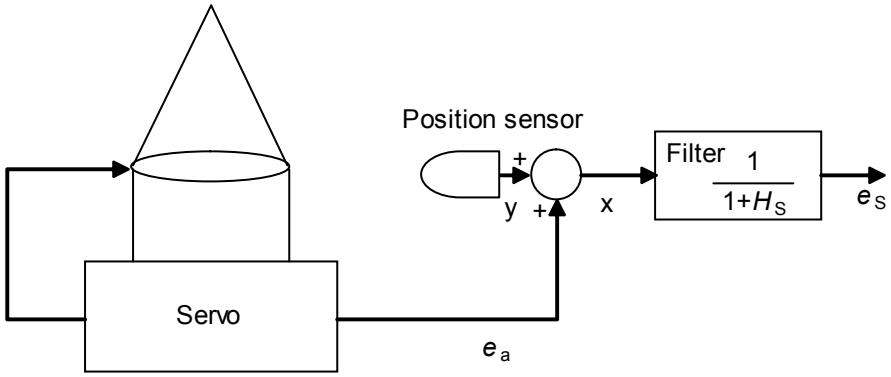

Figure N.2 – Implementation of a Reference Servo by filtering the track position signal with the reduction characteristics of the Reference Servo

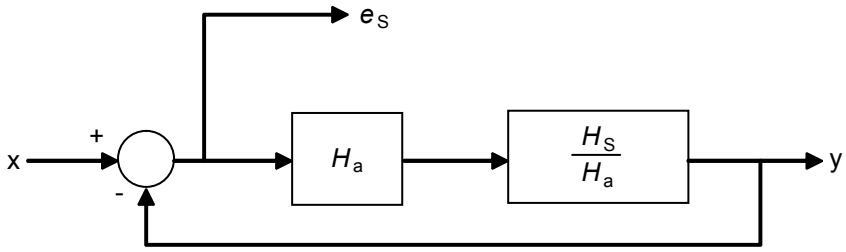

Figure N.3 – Implementation of a Reference Servo by changing the transfer function of the actual servo

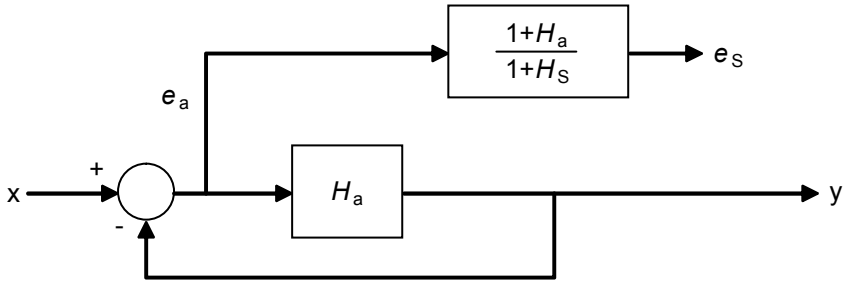

Figure N.4 – Implementation of a Reference Servo by changing the tracking error of the actual servo

© ISO/IEC 2005 All rights reserved

Copyright International Organization for Standardization
Reproduced by IHS under license with ISO
No reproduction or networking permitted without license from IHS
Not for Resale

The optimum implementation depends on the characteristics of H_a and H_s. Good results for motors in leaf springs are often obtained by using separate circuits in a low and high frequency channel. The implementation of Figure N.2 is used in the low-frequency channel, while that of Figures N.3 or N.4 is used in the high-frequency channel. The signals from both channels are added with a reversed cross-over filter to get the required tracking error. In the low-frequency channel one can also use the current through the motor as a measure of the acceleration of the motor, provided the latter is free from hysteresis. The current must be corrected for the transfer function of the motor and then be converted to a tracking error with a filter with a transfer function $e/a = e/(x\omega^2)$, derived from equation (4).

© ISO/IEC 2005 – All rights reserved
Copyright International Organization for Standardization
Reproduced by IHS under license with ISO
No reproduction or networking permitted without license from IHS
Not for Resale

Annex O
(informative)

Derivation of the operating climatic environment

This Annex gives some background on how some of the conditions of the operating environment in 8.1.2 have been derived.

O.1 Standard climatic environment classes

The conditions of the ODC operating environment are, with a few exceptions mentioned below, based on parameter values of the IEC standard climatic environment class 3K3 described in IEC publication 721-3-3:1987[1)]. This publication defines environmental classes for stationary use of equipment at weather-protected locations.

The IEC class 3K3 refers to climatic conditions which

"... may be found in normal living or working areas, e.g. living rooms, rooms for general use (theatres, restaurants, etc.), offices, shops, workshops for electronic assemblies and other electro technical products, telecommunication centres, storage rooms for valuable and sensitive products."

O.2 Over temperature considerations

While IEC class 3K3 defines the limits for the room climate only, the ODC operating environment specification in this International Standard takes into consideration also system and drive over temperature. This means that when inserted in a drive, the ODC will sense a temperature which is above the ambient room temperature. The Figures in the operating environment specification have been calculated from the assumption that this over temperature may be up to 20 °C.

O.3 Absolute humidity

The introduction of the parameter

absolute humidity [unit: g water / m^3 of air]

is very useful when studying over temperature. When the temperature rises inside a drive, the relative humidity goes down but the absolute humidity remains substantially constant. So, making room for over temperature in the operating environment specification affects not only the upper temperature limit but also the lower relative humidity limit. The relationship between these parameters is shown in the climatogram (the relative humidity versus temperature map) of the ODC operating environment, Figure O.1.

The absolute humidity restrictions influence the operating environment in the following two ways:

a) Combinations of high temperatures and high relative humidities are excluded. Such combinations could have negative influence on the performance and the life of ODCs.

b) Combinations of low temperatures and low relative humidities are excluded. Such combinations are very unlikely to occur in worldwide normal office environments.

1) Classification of environmental conditions - Part 3: Classification of groups of environmental parameters and their severities. Stationary use at weather protected locations.

--`,,`,`-`-`,,`,,`,`,,`---

© ISO/IEC 2005 All rights reserved

Copyright International Organization for Standardization
Reproduced by IHS under license with ISO
No reproduction or networking permitted without license from IHS
Not for Resale

O.4 Deviations from the IEC standard environment class

Apart from the changes introduced by the over temperature considerations mentioned above, there are a few more parameter values which are not based on IEC class 3K3. These are:

- Atmospheric pressure

The IEC 3K3 lower limit of 70 kPa has been extended to 60 kPa. ODCs show no intrinsic pressure sensitivity and 70 kPa excludes some possible markets for ODCs.

- Absolute humidity

The IEC 3K3 value for the upper limit of 25 g/m^3 has been raised to 30 g/m^3 in view of some expected operation in portable devices outside the controlled office environment.

- Temperature

The maximum temperature around the ODC, i.e. room temperature plus over temperature, has been limited to 55 °C (while IEC 3K3 + 20 °C would have become 60 °C). For ODCs according to this International Standard, however, the 55 °C limit is considered to be a physical limit above which operation (as well as storage) is not safe.

This means that equipment designers may want to ensure adequate cooling inside the drive especially when the room temperature approaches the upper IEC 3K3 limit of 40 °C.

- Further

The rates of change (the gradients) of temperature and relative humidity are not according to IEC 3K3.

O.5 Wet bulb temperature specifications

Instead of specifying limits for the absolute humidity, some of the earlier standards for ODCs as well as those for other digital data storage media often used restrictions of the parameter

wet bulb temperature [unit: °C]

in order to avoid too severe combinations of high temperatures and high relative humidities.

In order to facilitate comparisons between different specifications, Figure O.2 shows wet bulb temperatures of interest for the ODC operating environment, as well as for the testing and storage environments. Since wet bulb temperatures vary slightly with the atmospheric pressure, the diagram is valid for the normal pressure of 101,3 kPa only.

© ISO/IEC 2005 – All rights reserved
Copyright International Organization for Standardization
Reproduced by IHS under license with ISO
No reproduction or networking permitted without license from IHS
Not for Resale

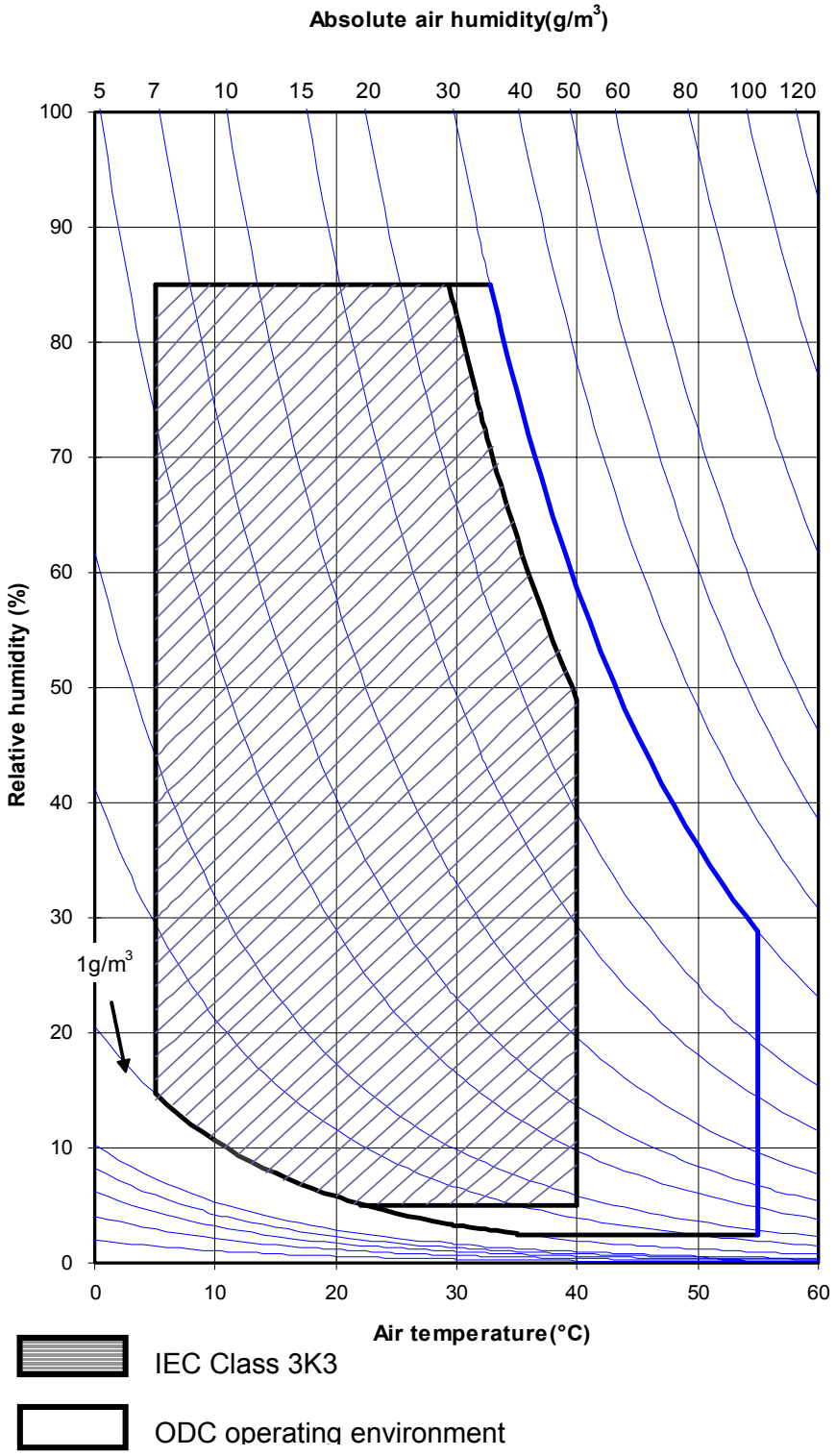

Figure O.1 – Climatogram of IEC Class 3K3 and the ODC operating environment

© ISO/IEC 2005 All rights reserved

Copyright International Organization for Standardization
Reproduced by IHS under license with ISO
No reproduction or networking permitted without license from IHS
Not for Resale

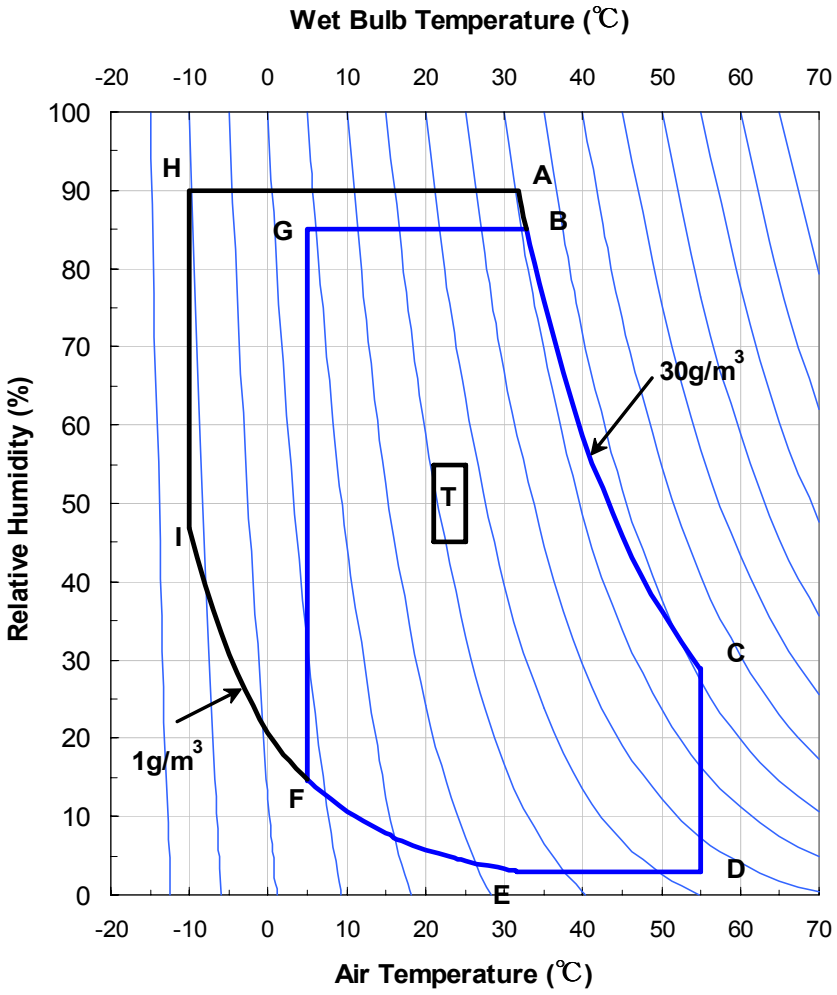

Figure O.2 – Wet bulb temperatures of the operating and storage environments

The points A to I and area T are defined in Table O.1.

Copyright International Organization for Standardization
Reproduced by IHS under license with ISO
No reproduction or networking permitted without license from IHS
© ISO/IEC 2005 – All rights reserved
Not for Resale

Table O.1 – Position of the main points

	Air Temperature °C	Relative Humidity %	Wet bulb temperature °C
A	31,7	90,0	30,3
B	32,8	85,0	30,6
C	55,0	28,8	35,5
D	55,0	3,0	22,2
E	31,7	3,0	12,1
F	5,0	14,6	-1,4
G	5,0	85,0	3,9
H	-10,0	90,0	-10,3
I	-10,0	46,8	-11,6
Test environment (T)	23,0 ± 2,0	50,0 ± 5,0	---
Storage environment	is determined by A-B-C-D-E-F-I-H		
Operating environment	is determined by B-C-D-E-F-G		

© ISO/IEC 2005 All rights reserved

Copyright International Organization for Standardization
Reproduced by IHS under license with ISO
No reproduction or networking permitted without license from IHS
Not for Resale

Annex P
(informative)

Transportation

P.1 General

As transportation occurs under a wide range of temperature and humidity variations, for differing periods, by many methods of transport and in all parts of the world it is not possible to specify conditions for transportation or for packaging.

P.2 Packaging

The form of packaging should be agreed between sender and recipient or, in the absence of such agreement, is the responsibility of the sender. It should take account of the following hazards.

P.2.1 Temperature and humidity

Insulation and wrapping should be designed to maintain the conditions for storage over the estimated period of transportation.

P.2.2 Impact loads and vibration

a) Avoid mechanical loads that would distort the shape of the cartridge.

b) Avoid dropping the cartridge.

c) Cartridges should be packed in a rigid box containing adequate shock-absorbent material.

d) The final box should have a clean interior and a construction that provides sealing to prevent the ingress of dirt and moisture.

© ISO/IEC 2005 – All rights reserved
Copyright International Organization for Standardization
Reproduced by IHS under license with ISO
No reproduction or networking permitted without license from IHS
Not for Resale

Annex Q
(informative)

Office environment

Q.1 Air cleanliness

Due to their construction and mode of operation optical disk cartridges have considerable resistance to the effects of dust particles around and inside the disk drive. Consequently it is not generally necessary to take special precaution to maintain a sufficiently low concentration of dust particles.

Operation in heavy concentrations of dust should be avoided, e.g. in a machine shop or on a building site.

Office environment implies an environment in which personnel may spend a full working day without protection and without suffering temporary or permanent discomfort.

Q.2 Effects of operation

In the office environment (as well as other environments) it is possible for an optical disk drive to degrade the quality of written marks if the read power is applied to a single track for a long period of time. This would happen if a media in a drive remains loaded, the drive remains in the ready status, and is in jump-back mode on one particular track. If this occurs at the maximum operating temperature (55 °C) and at the maximum allowable bias field (36 000 A/m), the marks on the media may be degraded. The media vendor's selection of the value for the maximum read powers allowed in the User Zone as well as the optical drive vendor's read power management method should reflect this possibility and be designed to minimize any risk to data integrity.

© ISO/IEC 2005 All rights reserved

Copyright International Organization for Standardization
Reproduced by IHS under license with ISO
No reproduction or networking permitted without license from IHS
Not for Resale

Annex R
(informative)

Values to be implemented in existing and future standards

This International Standard specifies values for bytes which identify optical cartridges which conform this International Standard. It is expected that other types of optical disk cartridges will be developed in future. It is therefore recommended that the following values be used for these other cartridges.

R.1 Byte 0 of the Control Track

The setting of bits 6 to 4 have the indicated meanings:

000	Constant Angular Velocity (CAV)
001	Constant Linear Velocity (CLV)
010	Zoned Constant Angular Velocity (ZCAV)
011	Zoned Constant Linear Velocity (ZCLV)
110	Logical Zoned Constant Angular Velocity (Logical ZCAV)

R.2 Byte 7 of the Control Track

The following bit patterns have the indicated meanings:

0000 0000	Read Only ODCs (ROM)
0001 0000	Write Once ODCs using irreversible recording
0001 0001	Write Once ODCs using MO recording
0010 0000	Rewritable ODCs using MO recording
0010 0010	Rewritable ODCs using MO recording (Necessary to apply magnetic field for reading data)
0110 0000	Rewritable ODCs using DOW recording
0011 0000	Rewritable ODCs using Phase Change recording
1001 0000	Partial ROM of Write Once ODCs
1010 0000	Partial ROM of MO
1110 0000	Partial ROM of DOW
1011 0000	Partial ROM of Phase Change

--`,,`,`-`-`,,`,,`,`,,`---
© ISO/IEC 2005 – All rights reserved
Copyright International Organization for Standardization
Reproduced by IHS under license with ISO
No reproduction or networking permitted without license from IHS
Not for Resale

Annex S
(informative)

Measurement of the vertical birefringence of the substrate

For good optical drive performance, average or bulk values of birefringence must be monitored. It is necessary to determine both in-plane (IP) and vertical birefringence (VB) with a high degree of accuracy to properly control the substrate processing. This Annex describes a simple, non-contact technique to measure VB in optical media for both uncoated substrates and for disks coated with thin films.

The IP and VB are obtained by using a slightly modified Variable Angle Spectroscopic Ellipsometer (VASE) with an analytical fitting routine. The VASE is set to measure the phase retardation between orthogonal polarization states for a minimum of three incident angles. Since the substrate is relatively thin (1,2 mm), there are two reflections which almost overlap: one from the top surface, and one from the MO layers which undergoes phase shifting due to the birefringence. To eliminate the undesirable to surface reflected beam, a simple beam stop is employed. This small blocking element consists of a thin (< 0,5 mm) but stiff opaque strip which is inserted at the reflection point of the incident beam and which is in close proximity with the top of the disk. By carefully adjusting the position of the strip to achieve maximum reflected signal at the point of reflection, the top surface reflection is blocked and only the bottom reflection off the internal surface (thin film surface) is allowed to pass to the polarization detector (see Figure S.1). If the strip is moved too close to the incident source, the main beam is blocked and the signal drops. However, if the strip is moved too far from the reflection point, both reflections are blocked and again the signal drops. This approach is based on an established technique which uses an index matching liquid and an optical element to remove the undesirable top surface reflection. Reference 1 details the contact approach which suffers from the disadvantage of being more cumbersome to implement. For clear substrates, the VASE can be used in the straight-through mode and the measurements made in transmission and again no contact is required.

In either case, and for both the clear coated disks, the phase retardation is measured as a function of angle of incidence. Three angles would generally be the minimum necessary to establish VB. Assuming a disk where the principal optical axes are aligned with the cylindrical coordinates of the disk (which is almost universally the case), there is an expression relating the retardation as a function of angle of incidence to the indices of the disk: N_r, N_Φ, N_z. The retardation data are regression fit to the non-linear analytical expression given below, and the indices are determined.

$$\Delta = d \times \left(\sqrt{N_r^2 - sin^2(\theta)} - \frac{N_\Phi}{N_z} \sqrt{N_z^2 - sin^2(\theta)} \right)$$

where Δ is the retardation in nm as a function of θ, the angle of incidence in air, and d is the thickness of the disk (typically 1,2 mm). The birefringence results from the differences between the indices

In plane: $\Delta N_{in} = N_r - N_\Phi$

Vertical: $\Delta N_{vert} = 0{,}5(N_r + N_\Phi) - N_z$

The dimensionless birefringence can be expressed in length units by multiplying ΔN_{in} or ΔN_{vert} by the substrate thickness d. In this case, the birefringence is expressed as nm of retardation.

--`,,`,`-`-`,,`,,`,`,,`---
© ISO/IEC 2005 All rights reserved
Copyright International Organization for Standardization
Reproduced by IHS under license with ISO
No reproduction or networking permitted without license from IHS
Not for Resale

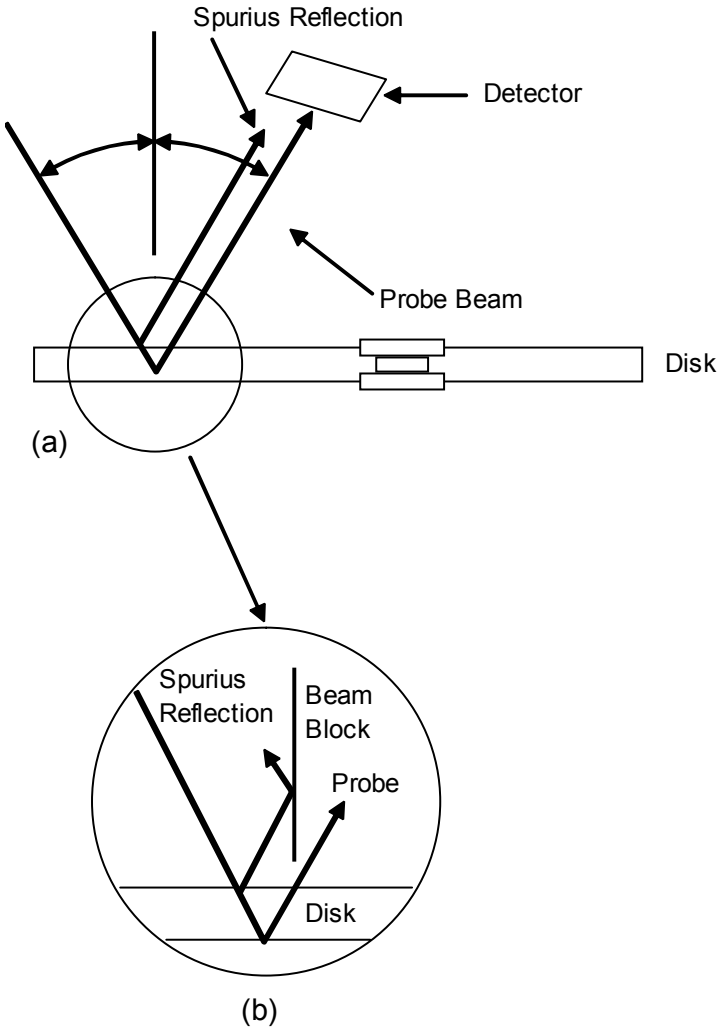

(a) Origin of spurious reflection

(b) Non-contact beam blocking technique for eliminating spurious reflection

Figure S.1 – Measurement method of the vertical birefringence of the substrate

--`,,`,`-`-`,,`,,`,`,,`---

© ISO/IEC 2005 – All rights reserved
Copyright International Organization for Standardization
Reproduced by IHS under license with ISO
No reproduction or networking permitted without license from IHS
Not for Resale

Annex T
(informative)

Sector retirement guidelines

This International Standard assumes that, up to a maximum (see 19), sectors may be replaced in any of the following cases:

— A sector does not have at least one reliable ID field.

— Only one of the two ID fields in one sector is reliable, and the current sector number is contradictory to the one anticipated by the preceding sectors.

— A single defect of more than 80 bytes in a sector is detected.

— The total number of defective bytes exceeds 80 bytes in a sector, or 4 bytes in one ECC interleave of a sector.

© ISO/IEC 2005 All rights reserved

Copyright International Organization for Standardization
Reproduced by IHS under license with ISO
No reproduction or networking permitted without license from IHS
Not for Resale

Annex U
(informative)

Laser power calibration for evaluation of media power sensitivity

U.1 Variance of testing condition

For measurement of media power sensitivity specified in 24.3.4, laser power of the media tester should be calibrated carefully since the values of the media power sensitivity C are easily affected by the various variation allowed for Reference drive. The laser spot profile on the magnetic layer varies with optical variation allowed for Reference drive specified in 9.2. Table U.1 shows the best and the worst conditions allowed for Reference drive from the point of view of the write power sensitivity. The peak temperature for the worst condition is estimated to decrease by 21 % from that for the best condition. Therefore media power sensitivity C should be carefully evaluated.

Table U.1 – The best and worst conditions allowed for Reference drive

	Best condition	Worst condition
λ	675 nm	695 nm
λ/NA	1,227 µm	1,263 µm
D/W	0,8	0,9
Variance of wave front Optical head	0	0,033 λrms
Disk tilt	0	4,8 mrad (Radial tilt)
Variation of disk thickness	0	50 µm

U.2 Power calibration

Laser power calibration of the tester should be done in the following scheme. Use of a high speed front power monitor is recommended for precise calibration.

Step 1: Calibrate high-speed front monitor by power meter (Figure U.1).

* The calibration can be done in a d.c. laser operation with a d.c. power meter.
* For the purpose of observing the write pulse shape during writing, high speed (> 100 MHz) front power monitor is recommended.

--`,,`,`-`-`,,`,,`,`,,`---
© ISO/IEC 2005 – All rights reserved
Copyright International Organization for Standardization
Reproduced by IHS under license with ISO
No reproduction or networking permitted without license from IHS
Not for Resale

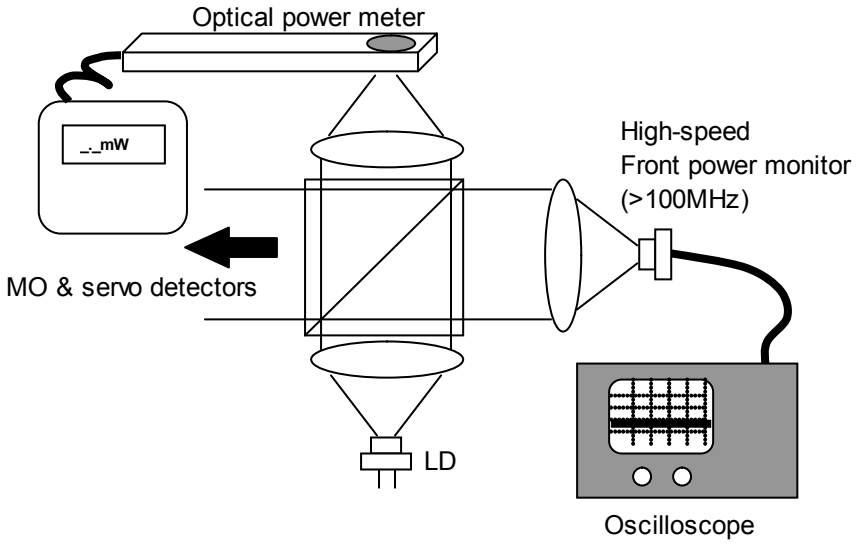

Figure U.1 – Calibration of front power monitor

Step 2: Directly observe the write pulse shape during writing (Figure U.2).

* Pulse power in focused condition is different from that in un-focused condition because of the self coupled effect of the laser diode.
* Pulse power, pulse duration, and assist power level should be carefully observed in real testing condition.
* Check if shapes of three kinds of pulses, which are isolated pulses for 2T marks and two T spaced pulses for 4T marks, are completely identical. If not, significant error will appear in the measurement of C and E_{th}.

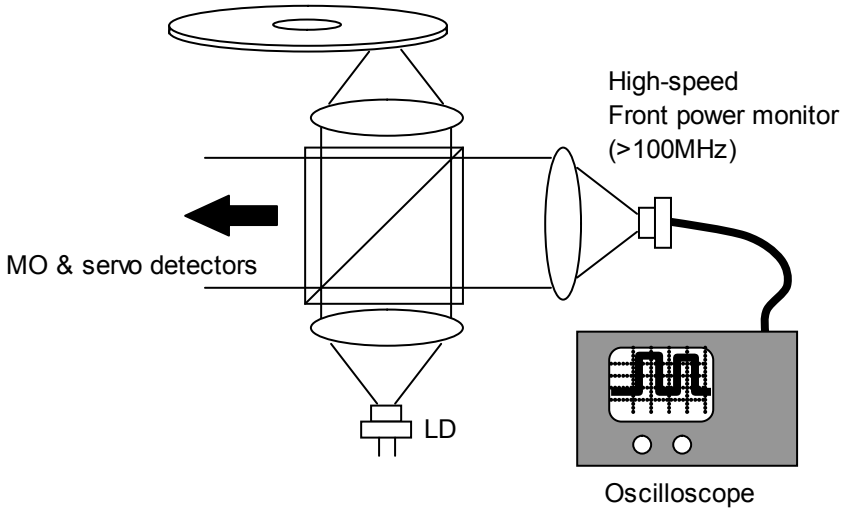

Figure U.2 – Measurement of pulse power and pulse width

--`,,`,,`-`-`,,`,,`,`,,`---
© ISO/IEC 2005 All rights reserved
Copyright International Organization for Standardization
Reproduced by IHS under license with ISO
No reproduction or networking permitted without license from IHS
Not for Resale

Step 3: Measure write pulse power and pulse width with appropriate filters.

* Ringing can be removed by a (Gaussian) low pass filter with a cut-off frequency of 80 MHz (Figure U.3a).
* For precise pulse energy measurement, average power level measurement is recommended unless high speed front monitor is available (Figure U.3b).

Notes for measurement:

Assist power level

Assist power level Pa should be measured carefully (with an accuracy of ± 0,05 mW) because error in the Pa measurement may result in a significant error in measured C-value.

Disk temperature

Disk temperature should be kept at 25 °C ± 1 °C. Internal temperature may rise if the tester lid is closed.

Stray light

The stray light within the optical head may enter the objective lens and form a stray beam spot. Even if the temperature increase in the optical beam spot is small, the measurement for the light power through the objective lens may large.

Contamination of optical components (especially the objective lens)

If the light is absorbed by dust or other debris, the light power through the objective lens decreases. This can be measured by the power meter and does not, therefore, result in any complications. If the light is diverted instead of being absorbed, however, not all of the light power through the objective lens is valid for the temperature-up of the media; therefore, variance results. Frequent cleaning is required.

Beam spot size

On ahead of measurement of media power sensitivity, the beam profile of the tester should be checked by optical knife edge profiler (ex. SpotScan Model 0390). Unless the measured spot diameter is far from 1,08 µm, which is the best diameter for Reference drive, the above conditions such as disk tilt should be carefully adjusted.

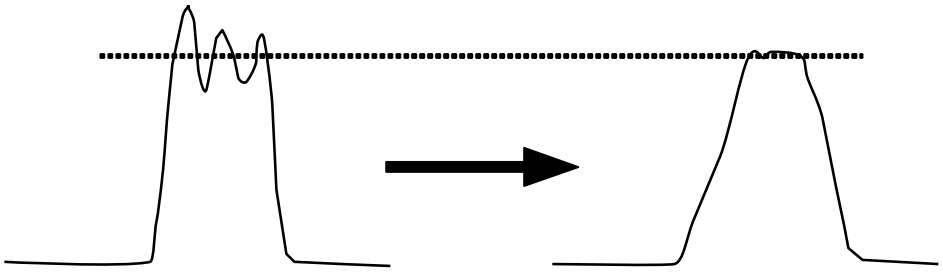

Figure U.3a – Elimination of ringing by LPF (~100 MHz)

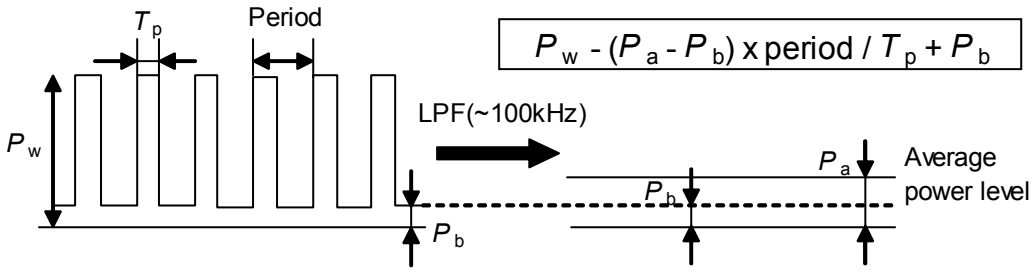

Figure U.3b – Determination of pulse power from the average power level

© ISO/IEC 2005 – All rights reserved
Copyright International Organization for Standardization
Reproduced by IHS under license with ISO
No reproduction or networking permitted without license from IHS
Not for Resale

Copyright International Organization for Standardization
Reproduced by IHS under license with ISO
No reproduction or networking permitted without license from IHS
Not for Resale

ICS 35.220.30

Price based on 126 pages

--`,,`,`-`-`,,`,,`,`,,`---

© ISO/IEC 2005 – All rights reserved

Copyright International Organization for Standardization
Reproduced by IHS under license with ISO
No reproduction or networking permitted without license from IHS

Not for Resale