INTERNATIONAL STANDARD

ISO/IEC 22050

First edition
2002-10-01

Information technology — Data interchange on 12,7 mm, 384-track magnetic tape cartridges — Ultrium-1 format

Technologies de l'information — Échange de données sur cartouches à bande magnétique 12,7 mm, *384 pistes — Format Ultrium-1*

Reference number
ISO/IEC 22050:2002(E)

© ISO/IEC 2002

Copyright International Organization for Standardization
Reproduced by IHS under license with ISO
No reproduction or networking permitted without license from IHS

Not for Resale

PDF disclaimer

This PDF file may contain embedded typefaces. In accordance with Adobe's licensing policy, this file may be printed or viewed but shall not be edited unless the typefaces which are embedded are licensed to and installed on the computer performing the editing. In downloading this file, parties accept therein the responsibility of not infringing Adobe's licensing policy. The ISO Central Secretariat accepts no liability in this area.

Adobe is a trademark of Adobe Systems Incorporated.

Details of the software products used to create this PDF file can be found in the General Info relative to the file; the PDF-creation parameters were optimized for printing. Every care has been taken to ensure that the file is suitable for use by ISO member bodies. In the unlikely event that a problem relating to it is found, please inform the Central Secretariat at the address given below.

© ISO/IEC 2002

All rights reserved. Unless otherwise specified, no part of this publication may be reproduced or utilized in any form or by any means, electronic or mechanical, including photocopying and microfilm, without permission in writing from either ISO at the address below or ISO's member body in the country of the requester.

ISO copyright office
Case postale 56 • CH-1211 Geneva 20
Tel. + 41 22 749 01 11
Fax + 41 22 749 09 47
E-mail copyright@iso.ch
Web www.iso.ch

Printed in Switzerland

--`,,`,,`-`-`,,`,,`,`,,`---

Copyright International Organization for Standardization
Reproduced by IHS under license with ISO
No reproduction or networking permitted without license from IHS

© ISO/IEC 2002 – All rights reserved

Not for Resale

Contents

Section 1 – General

1	Scope	**1**
2	Conformance	**1**
2.1	Magnetic tape cartridge	**1**
2.2	Generating system	**1**
2.3	Receiving system	**1**
3	Normative references	**1**
4	Terms and definitions	**2**
4.1	Access Point	**2**
4.2	algorithm	**2**
4.3	algorithmically processed data	**2**
4.4	a.c. erase	**2**
4.5	Average Signal Amplitude	**2**
4.6	back surface	**2**
4.7	Beginning of Tape (BOT)	**2**
4.8	Beginning of Wrap (BOW)	**2**
4.9	bit	**2**
4.10	bit cell	**2**
4.11	Broad Band Signal-to-Noise Ratio (BBSNR)	**2**
4.12	byte	**2**
4.13	cartridge	**2**
4.14	Channel bit	**3**
4.15	Codeword	**3**
4.16	Codeword Pair	**3**
4.17	Codeword Quad (CQ)	**3**
4.18	CQ Set	**3**
4.19	cyclic redundancy check (CRC) character	**3**
4.20	Data Set	**3**
4.21	Data Set Information Table (DSIT)	**3**
4.22	End of Data (EOD)	**3**
4.23	End of Tape (EOT)	**3**
4.24	End of Wrap (EOW)	**3**
4.25	Error Correcting Code (ECC)	**3**
4.26	File Mark	**3**
4.27	flux transition position	**3**
4.28	flux transition spacing	**3**
4.29	forward tape motion	**3**
4.30	header	**3**
4.31	Housekeeping Data Set	**3**
4.32	logical forword	**4**
4.34	Logical Point	**4**
4.35	magnetic tape	**4**
4.36	Master Standard Reference Tape (MSRT)	**4**
4.37	LTO Cartridge Memory (LTO CM)	**4**
4.38	Optimum Recording Current	**4**

Copyright International Organization for Standardization – ıts reserved
Reproduced by IHS under license with ISO
No reproduction or networking permitted without license from IHS
Not for Resale

4.39 physical end of tape **4**
4.40 physical forward **4**
4.41 physical reverse **4**
4.42 pre-record condition **4**
4.43 processed data **4**
4.44 Processed Record **4**
4.45 Processing (Compression) **4**
4.46 Protected Record **4**
4.47 Record **5**
4.48 recorded element **5**
4.50 Reprocessing (Decompression) **5**
4.51 reverse tape motion **5**
4.52 run length limited encoding (RLL) **5**
4.53 Secondary Standard Reference Tape (SSRT) **5**
4.54 servo acquisition region **5**
4.55 Standard Reference Amplitude (SRA) **5**
4.56 Symbol **5**
4.57 Synchronised Codeword Quad (SCQ) **5**
4.58 Test Recording Density (TRD) **5**
4.59 wrap **5**
4.60 write equalisation **5**
4.61 (1,7) RLL code **5**

5 Conventions and notations **6**

5.1 Representation of numbers **6**
5.2 Dimensions **6**
5.3 Names **6**
5.4 Alphanumeric string encoding **6**

6 Acronyms **6**

7 Environment and safety **6**

7.1 Cartridge and tape testing environment **7**
7.2 Cartridge operating environment **7**
7.3 Cartridge storage environment **7**
7.4 Tape tension **7**
7.5 Safety **7**
7.6 Flammability **7**
7.7 Transportation **7**

Section 2 - Requirements for the Cartridge **8**

8 Dimensional and Mechanical Characteristics of the Cartridge **8**

8.1 Elements of the cartridge **8**
8.2 Reference Planes of the case **8**
8.3 Dimensions of the case **8**
8.3.1 Overall dimension **8**
8.3.2 Reference points for reference planes **9**
8.3.3 Positioning notches **10**
8.3.4 Handling notches **10**
8.3.5 Mis-insertion protection **11**
8.3.6 Stacking features **11**
8.3.7 Label area of the rear side **12**
8.3.8 Central window **12**
8.3.9 Sliding door **12**
8.3.10 Case opening **12**
8.4 Write-inhibit mechanism **13**

Copyright International Organization for Standardization
Reproduced by IHS under license with ISO
No reproduction or networking permitted without license from IHS
Not for Resale

© ISO/IEC 2002 – All rights reserved

8.5 Flexibility of the case **13**
8.5.1 Requirements **13**
8.5.2 Procedure **13**

8.6 Tape reel **13**
8.6.1 Locking mechanism **13**
8.6.2 Axis of rotation of the reel **14**
8.6.3 Reel flanges **14**
8.6.4 Metallic insert **14**
8.6.5 Toothed rim **15**
8.6.6 Hub of the reel **15**
8.6.7 Relative positions of hub and case **15**
8.6.8 Characteristics of the toothed rim **15**

8.7 Magnetic tape **16**
8.7.1 Tape wind **16**
8.7.2 Wind tension **16**
8.7.3 Circumference of the tape reel **16**
8.7.4 Moment of inertia **16**

8.8 Leader pin assembly **17**
8.8.1 Leader pin assembly dimensions **17**
8.8.2 Leader tape attachment to leader pin assembly **17**
8.8.3 Latching the leader pin assembly in the case **17**
8.8.4 Mechanism and tape exit keepout area **18**

8.9 LTO CM **18**

8.10 Areas reserved for cartridge presence sensing **19**

8.11 Handling grips and insertion indicator **19**
8.11.1 Side grips **19**
8.11.2 Insertion indicator **19**
8.11.3 Top grip **19**
8.11.4 Bottom grip **20**

8.12 Pad Printing Areas **20**

8.13 Opacity **20**

Section 3 - Requirements for the Unrecorded Tape **35**

9 Mechanical, physical and dimensional characteristics of the tape **35**

9.1 Materials **35**

9.2 Tape length **35**
9.2.1 Length of magnetic tape **35**
9.2.2 Length of leader tape **35**
9.2.3 Length of splicing tape **35**

9.3 Tape Width **35**
9.3.1 Width of magnetic tape **35**
9.3.2 Width of leader tape **35**
9.3.3 Width of splicing tape **35**
9.3.4 Procedure **36**

9.4 Tape Thickness **36**
9.4.1 Procedure **36**

9.5 Longitudinal curvature **36**
9.5.1 Procedure **36**

Copyright International Organization for Standardization – ıts reserved
Reproduced by IHS under license with ISO
No reproduction or networking permitted without license from IHS
Not for Resale

9.6 Edge Quality **36**
9.6.1 Edge deviation **36**

9.7 Tape flatness **37**
9.7.1 Cupping **37**
9.7.2 Curl/Twist **38**

9.8 Coating adhesion **38**
9.8.1 Procedure **38**

9.9 Layer-to-layer adhesion **38**
9.9.1 Requirement **38**
9.9.2 Procedure **39**

9.10 Coefficient of friction **40**
9.10.1 Requirement **40**
9.10.2 Procedure for the measurement of the dynamic friction between the magnetic surface and the back surface **40**
9.10.3 Procedure for the measurement of the dynamic friction between the back surface and SS-310 stainless steel **40**
9.10.4 Procedure for the measurement of the dynamic friction between the magnetic surface and AlO_2/TiC ceramic **40**

9.11 Surface quality **41**
9.11.1 Surface roughness **41**

9.12 Abrasivity **41**

9.13 Tensile strength **41**
9.13.1 Breaking strength **41**
9.13.2 Offset yield strength **41**

9.14 Longitudinal compliance **41**
9.14.1 Procedure **42**

9.15 Residual elongation **42**
9.15.1 Requirement **42**
9.15.2 Procedure **42**

9.16 Flexural rigidity **42**
9.16.1 Requirement **42**
9.16.2 Procedure **42**

9.17 Transverse dimensional stability **42**

9.18 Electrical resistance of coated surfaces **42**
9.18.1 Requirement **42**
9.18.2 Procedure **42**

10 Magnetic Recording Characteristics **43**

10.1 General **43**

10.2 Test conditions **43**

10.3 Optimum Recording Current **44**

10.4 Signal amplitude **44**

10.5 Resolution **44**

10.6 Overwrite **44**
10.6.1 Requirement **44**

Copyright International Organization for Standardization
Reproduced by IHS under license with ISO
No reproduction or networking permitted without license from IHS
Not for Resale

© ISO/IEC 2002 – All rights reserved

10.7 Ease of erasure **44**
10.8 Broad Band Signal-to-Noise Ratio **44**
10.8.1 Requirement **44**
10.9 Tape quality **44**
10.9.1 Missing pulses **44**
10.9.2 Missing pulse zone **45**
Section 4 - Requirements for an Interchanged Tape **45**
11 Method of recording servo bands **45**
11.1 General **45**
11.2 Servo bands **45**
11.2.1 Servo stripes **46**
11.2.2 Servo bursts **46**
11.2.3 Servo frames **46**
11.2.4 Servo signal amplitude **47**
11.2.5 Servo signal polarity **47**
11.2.6 Servo defects **48**
11.3 Servo frame encoding **48**
11.3.1 Method of encoding position and manufacturer's data **48**
11.3.2 LPOS word construction **50**
11.3.3 Tape manufacturer encoding **51**
11.3.4 Cross tape identification **53**
11.4 Servo band location **53**
11.5 Servo band pitch **53**
11.6 Nominal servo locations **53**
11.7 Long-term average servo location **53**
12 Method of recording data tracks **54**
12.1 Physical recording density **54**
12.2 Nominal bit cell length **54**
12.3 Long-term average bit cell length **54**
12.4 Short-term Average Bit Cell Length (STA) **54**
12.5 Rate of change of the STA **54**
12.6 Bit shift **54**
12.7 Recording performance test conditions **54**
12.8 Track sequence addressing **54**
12.9 Location of data tracks **55**
12.10 Track width **55**
12.11 Adjacent track pitch **56**
12.12 Azimuth **56**
12.13 Total character skew **56**
12.14 Channel Layout **56**
13 Format **57**
13.1 General **57**
13.2 Protected Record **58**
13.3 Processed Protected Record Sequence **59**
13.3.1 Control Symbols **59**
13.3.2 End Marker **60**
13.3.3 Access Points **60**
13.3.4 Alignment and append points **61**

Copyright International Organization for Standardization
Reproduced by IHS under license with ISO
No reproduction or networking permitted without license from IHS
Not for Resale

13.4 Data Set **61**
13.4.1 Format Identification Data Set (FID) **61**
13.4.2 User Data Set **62**
13.4.3 EOD Data Set **62**
13.4.4 Housekeeping Data Set **62**

13.5 Data Set Information Table (DSIT) **62**
13.5.1 Drive Manufacturer Use **63**
13.5.2 Drive Manufacturer Use C1 **63**
13.5.3 Reserved **63**
13.5.4 Drive Manufacturer's Identity **63**
13.5.5 Data Set number **63**
13.5.6 Valid Data Length **64**
13.5.7 Access Point Offset **64**
13.5.8 Total Records **64**
13.5.9 Total File Marks **65**
13.5.10 Record Count **65**
13.5.11 File Mark Count **66**
13.5.12 Thread Count **66**
13.5.13 Data Set Type **66**
13.5.14 Data Set Flags **67**
13.5.15 Thread Write Pass **67**
13.5.16 Tape Write Pass **67**

13.6 ECC **67**
13.6.1 Sub Data Set **68**
13.6.2 C1 Sub Data Set **68**
13.6.3 ECC Encoded Sub Data Set **69**
13.6.4 Codeword Pair designation **70**

13.7 Codeword Quads (CQ) **70**
13.7.1 Codeword Pair Header **71**
13.7.2 First Codeword Pair **72**
13.7.3 Second Codeword Pair **72**

13.8 Allocation of CQs to Logical Tracks **73**
13.9 Data randomisation **74**
13.10 RLL encoding **74**

14 Recording of data on tape **75**

14.1 Synchronised Data Set **75**
14.1.1 Data Set Separator (DSS) **75**
14.1.2 VFO Field 1 **76**
14.1.3 VFO Field 2 **76**
14.1.4 Synchronised Codeword Quad (SCQ) **76**

14.2 Write equalisation bit encoding **77**
14.3 Writing cells on tape **77**

15 Regions on tape **77**

15.1 Logical Points and regions **77**
15.2 Calibration Region **79**
15.3 User Data Region **79**
15.4 Interrupted Data Sets **79**
15.5 Repeated CQ Sets **80**

Copyright International Organization for Standardization
Reproduced by IHS under license with ISO
No reproduction or networking permitted without license from IHS
Not for Resale
© ISO/IEC 2002 – All rights reserved

15.6 Amble CQs **80**
15.7 Beginning of Wrap (BOW) **81**
15.8 End of Wrap (EOW) **81**
15.9 Appending and Overwriting **81**
15.10 Servo Tracking Faults **82**

Annexes

A - Measurement of Bit Shift **83**
B - Measurement of Broad Band Signal-to-Noise Ratio **84**
C - Tape Abrasivity Measurement Procedure **86**
D - LTO Cartridge Memory **88**
E - Flexural Rigidity Procedure **107**
F - LTO CM electrical interface **109**
G - Recommendations for transportation **126**
H - Inhibitor Tape **127**
I - Vendor code lists **128**

Copyright International Organization for Standardization – ıts reserved
Reproduced by IHS under license with ISO
No reproduction or networking permitted without license from IHS
Not for Resale

Foreword

ISO (the International Organization for Standardization) and IEC (the International Electrotechnical Commission) form the specialized system for worldwide standardization. National bodies that are members of ISO or IEC participate in the development of International Standards through technical committees established by the respective organization to deal with particular fields of technical activity. ISO and IEC technical committees collaborate in fields of mutual interest. Other international organizations, governmental and non-governmental, in liaison with ISO and IEC, also take part in the work. In the field of information technology, ISO and IEC have established a joint technical committee, ISO/IEC JTC 1.

International Standards are drafted in accordance with the rules given in the ISO/IEC Directives, Part 3.

The main task of the joint technical committee is to prepare International Standards. Draft International Standards adopted by the joint technical committee are circulated to national bodies for voting. Publication as an International Standard requires approval by at least 75 % of the national bodies casting a vote.

Attention is drawn to the possibility that some of the elements of this International Standard may be the subject of patent rights. ISO and IEC shall not be held responsible for identifying any or all such patent rights.

ISO/IEC 22050 was prepared by ECMA (as ECMA-319) and was adopted, under a special “fast-track procedure”, by Joint Technical Committee ISO/IEC JTC 1, *Information technology*, in parallel with its approval by national bodies of ISO and IEC.

Annexes A to F form a normative part of this International Standard. Annexes G to I are for information only.

Copyright International Organization for Standardization
Reproduced by IHS under license with ISO
No reproduction or networking permitted without license from IHS
Not for Resale

© ISO/IEC 2002 – All rights reserved

Information technology — Data interchange on 12,7 mm, 384-track magnetic tape cartridges — Ultrium-1 format

Section 1 — General

1 Scope

This International Standard specifies the physical and magnetic characteristics of magnetic tape cartridges, using magnetic tape 12,65 mm wide so as to provide physical interchange of such cartridges between drives. It also specifies the quality of the recorded signals, the recording method and the recorded format, thereby allowing data interchange between drives by means of such cartridges. The format supports variable length Logical Records, high speed search, and the use of a registered algorithm for data compression.

This International Standard specifies four types of cartridges depending on the length of tape contained in the case. These four types are referred to as Type A, Type B, Type C and Type D; their nominal capacity is 100 Gbytes, 50 Gbytes, 30 Gbytes and 10 Gbytes, respectively.

NOTE - One Gbyte contains 1 000 000 000 bytes.

Information interchange between systems also requires, at a minimum, agreement between the interchange parties upon the interchange code(s) and the specification of the structure and labeling of the information on the interchanged cartridge.

This International Standard shall be used only in conjunction with ISO/IEC 22091.

Together with a standard for volume and file structure, e.g. Standard ISO 1001, this document provides for full data interchange between data processing systems.

2 Conformance

2.1 Magnetic tape cartridge

A tape cartridge shall be in conformance with this International Standard if it meets all the mandatory requirements specified herein. The tape requirements shall be satisfied throughout the extent of the tape.

2.2 Generating system

A system generating a magnetic tape cartridge for interchange shall be in conformance with this International Standard if all the recordings that it makes meet the mandatory requirements of this International Standard.

2.3 Receiving system

A system receiving a magnetic tape cartridge for interchange shall be in conformance with this International Standard if it is able to handle any recording made on the tape according to this International Standard.

3 Normative references

The following normative documents contain provisions which, through reference in this text, constitute provisions of this International Standard. For dated references, subsequent amendments to, or revisions of, any of these publications do not apply. However, parties to agreements based on this International Standard are encouraged to investigate the possibility of applying the most recent editions of the normative documents indicated below. For undated references, the latest edition of the normative document referred to applies. Members of ISO and IEC maintain registers of currently valid International Standards.

ISO 1001:1986	*Information processing — File structure and labelling of magnetic tapes for information interchange*
ISO 527 (all parts)	*Plastics — Determination of tensile properties*
ISO 3574:1999	*Cold-reduced carbon steel sheet of commercial and drawing qualities*
ISO 4287:1997	*Geometrical product specification (GPS) — Surface texture: Profile method — Terms, definitions and surface texture parameters*
ISO/IEC 646:1991	*Information technology — ISO 7-bit coded character set for information interchange*

© ISO/IEC 2002 — All rights reserved
Copyright International Organization for Standardization
Reproduced by IHS under license with ISO
No reproduction or networking permitted without license from IHS
Not for Resale

ISO/IEC 11576:1994	*Information technology — Procedure for the registration of algorithms for the lossless compression of data*
ISO/IEC 14443-2:2001	*Identification cards — Contactless integrated circuit(s) cards — Proximity cards — Part 2: Radio frequency power and signal interface*
ISO/IEC 22091:2002	*Information technology — Streaming Lossless Data Compression algorithm (SLDC)*
IEC 60950-1:2001	*Information technology equipment — Safety — Part 1: General requirements*
ASTM D4065-01:1995	*Standard Practice for Plastics: Dynamic Mechanical Properties: Determination and Report of Procedures*
ASTM D4092-01:1996	*Standard Terminology: Plastics: Dynamic Mechanical Properties*

4 Terms and definitions

For the purpose of this International Standard the following terms and definitions apply.

4.1 Access Point

A point, at the start of a sequence of Processed Records, at which the presentation of Symbols to a reprocessing algorithm is required to start at a known state to enable recovery, regardless of whether the data of interest in a retrieval operation starts at that point or at a subsequent point.

4.2 algorithm

A set of rules for transforming the logical representation of data.

4.3 algorithmically processed data

Data that has been processed by a defined processing algorithm.

4.4 a.c. erase

A process of erasure utilising alternating fields of decaying level.

4.5 Average Signal Amplitude

The average peak-to-peak value of the output signal from the read head at the fundamental frequency of the specified physical recording density over a minimum of 25,4 mm of track, exclusive of missing pulses.

4.6 back surface

The surface of the tape opposite to the magnetic coating which is used to record data.

4.7 Beginning of Tape (BOT)

The reference point on the tape nearest to the leader pin assembly.

4.8 Beginning of Wrap (BOW)

The Logical Point that indicates the beginning of a wrap: LP3 for forward wraps, LP4 for reverse wraps.

4.9 bit

A single digit in the binary number system, a ZERO or a ONE.

4.10 bit cell

A distance along the track between adjacent RLL encoded bits.

4.11 Broad Band Signal-to-Noise Ratio (BBSNR)

The average read signal power divided by the average integrated broad band (floor) RMS noise power and expressed in dB.

4.12 byte

An ordered set of eight bits (12 Channel bits) that are acted on as a unit.

4.13 cartridge

A case holding a single supply reel of magnetic tape and leader tape with an attached leader pin assembly at the BOT end.

Copyright International Organization for Standardization
Reproduced by IHS under license with ISO
No reproduction or networking permitted without license from IHS
Not for Resale
© ISO/IEC 2002 – All rights reserved

4.14 Channel bit

A bit output from RLL channel encoding.

4.15 Codeword

A set of bytes containing data and the ECC bytes calculated on that data.

4.16 Codeword Pair

An interleaved pair of Codewords.

4.17 Codeword Quad (CQ)

A set of two Codeword Pairs.

4.18 CQ Set

A group of CQs that are written at the same time, i.e. one on each of the active tracks.

4.19 cyclic redundancy check (CRC) character

A mathematically computed code which yields check bytes used for the detection of errors.

4.20 Data Set

The smallest complete unit of information written to, or received from, the tape.

4.21 Data Set Information Table (DSIT)

A table within a Data Set which describes the content of the Data Set.

4.22 End of Data (EOD)

The point on the tape at the end of the last valid Data Set recorded on tape.

4.23 End of Tape (EOT)

The point on a track farthest from BOT up to which recording is allowed.

4.24 End of Wrap (EOW)

The Logical Point that indicates the end of a wrap: LP4 for forward wraps, LP3 for reverse wraps.

4.25 Error Correcting Code (ECC)

A mathematically computed code which yields check bytes used for the detection and correction of errors.

4.26 File Mark

A recorded element requested to be written (or read) by the host that is typically used to mark organisational boundaries in a serial file structure, such as directory boundaries.

4.27 flux transition position

The point on the magnetic tape that exhibits the maximum free-space flux density normal to the tape surface.

4.28 flux transition spacing

The distance along a track between successive flux transitions.

4.29 forward tape motion

The tape is moving forward when it is leaving the reel in the cartridge and being wound onto the reel in the mechanism.

4.30 header

Data that is prefixed to a data entity to provide identification and checking.

4.31 Housekeeping Data Set

A Data Set which contains no user data and which is identified as such by the values in the data fields therein.

© ISO/IEC 2002 – All rights reserved
Copyright International Organization for Standardization
Reproduced by IHS under license with ISO
No reproduction or networking permitted without license from IHS
Not for Resale

4.32 logical forward

The direction of tape motion toward End of Wrap.

4.33 logical reverse

The direction of tape motion away from End of Wrap.

4.34 Logical Point

Defined bound where regions of the tape begin or end.

4.35 magnetic tape

A tape that accepts and retains magnetic signals intended for input, output, and storage of data for information processing.

4.36 Master Standard Reference Tape (MSRT)

A tape selected as the standard for reference recording current, signal amplitude, resolution, BBSNR, overwrite ratio, servo signal amplitude, and servo signal polarity.

NOTE - A Master Standard Reference Tape has been established at Ladas and Parry.

4.37 LTO Cartridge Memory (LTO CM)

A contactless storage device that is mounted in the case, and which can be used to hold information about that specific cartridge, the tape in the cartridge, and the data on the tape.

4.38 Optimum Recording Current

1,15 times the minimum current which, when applied to a magnetic tape, will cause the average signal amplitude to equal 95 % of the maximum average signal amplitude when recorded at density TRD1.

4.39 physical end of tape

Position of the tape farthest from the leader pin assembly at which the tape is cut and wrapped onto the hub during manufacture.

4.40 physical forward

The direction of tape motion from BOT to EOT. This will be logical forward for even numbered wraps.

4.41 physical reverse

The direction of tape motion from EOT to BOT. This will be logical forward for odd numbered wraps.

4.42 pre-record condition

A tape cartridge that has been a.c. erased and subsequently servo-written in preparation for data recording is in a pre-record condition.

4.43 processed data

A sequence of Symbols which results from the application of processing to data.

Data that has been processed by an algorithm.

4.44 Processed Record

A sequence of Symbols which results from the application of processing to a Protected Record.

4.45 Processing (Compression)

The use of an algorithm to transform host data into Symbols.

4.46 Protected Record

A Record with a 4-byte CRC added to the end. The CRC is checked during the deformatting process to ensure that the Record is uncorrupted.

--`,,`,,`-`-`,,`,,`,`,,`---

Copyright International Organization for Standardization
Reproduced by IHS under license with ISO
No reproduction or networking permitted without license from IHS

© ISO/IEC 2002 – All rights reserved

Not for Resale

4.47 Record

A Record is the smallest distinct set of data bytes supplied, e.g. from a host, for processing and recording by a tape drive system, and the smallest distinct set of data to be read from tape, reprocessed and made available, e.g. to a host, by a tape drive system.

4.48 recorded element

A File Mark or Record.

4.49 Reference Recording Current

The Optimum Recording Current of the Master Standard Reference Tape.

4.50 Reprocessing (Decompression)

The use of an algorithm to transform Symbols into data as required by the host.

4.51 reverse tape motion

The tape is moving in reverse when it is leaving the reel in the mechanism and being wound onto the reel in the cartridge.

4.52 run length limited encoding (RLL)

An algorithmic process applied to an arbitrary input binary sequence that produces an output binary sequence that has a specified minimum number of ZEROs between ONEs, and a specified maximum number of ZEROs between ONEs.

4.53 Secondary Standard Reference Tape (SSRT)

A tape, the performance of which is known and stated in relation to that of the Master Standard Reference Tape.

NOTE - Secondary Standard Reference Tapes can be ordered as "Ultrium Format Specification Generation 1 SSRT" from Ladas and Parry, 5670 Wilshire Blvd., 21st Floor, Los Angeles, CA 90036. In principle such tapes will be available for a period of 10 years from the publication of the first edition of this International Standard. However, by agreement between ECMA and Ladas and Parry, this period may be shortened or extended to take account of demands for such SSRTs.

It is intended that these SSRTs be used for calibrating tertiary reference tapes for use in routine calibration.

4.54 servo acquisition region

A region on tape that may be used by the servo circuitry.

4.55 Standard Reference Amplitude (SRA)

The average signal amplitude from the Master Standard Reference Tape when it is recorded with the Reference Recording Current at density TRD1. Traceability to the Standard Reference Amplitude is provided by the calibration factors supplied with each Secondary Standard Reference Tape.

4.56 Symbol

An associated string of bits generated by a processing (compression) algorithm, which represents a byte of data, a string of bytes of data, or control information.

4.57 Synchronised Codeword Quad (SCQ)

A serial bit stream formed by inserting synchronisation patterns into an RLL encoded Codeword Quad.

4.58 Test Recording Density (TRD)

The recording density at which specific tests are performed. There are three test recording densities: TRD1, TRD2 and TRD3. See 12.1.

4.59 wrap

A track group recorded in the physical forward or physical reverse direction.

4.60 write equalisation

An algorithmic process that linearly transforms an input binary sequence into another binary sequence.

4.61 (1,7) RLL code

A run length limited encoding scheme the output of which has no fewer than one ZERO between ONEs and no more than seven ZEROs between ONEs.

© ISO/IEC 2002 – All rights reserved
Copyright International Organization for Standardization
Reproduced by IHS under license with ISO
No reproduction or networking permitted without license from IHS
Not for Resale

5 Conventions and notations

5.1 Representation of numbers

The following conventions and notations apply in this International Standard unless otherwise stated.

- A measured value is rounded off to the least significant digit of the corresponding specified value. It implies that a specified value of 1,26 with a positive tolerance +0,01, and a negative tolerance -0,02 allows a range of measured values from 1,235 to 1,275.
- In each block and in each field the bytes shall be arranged with Byte 0, the most significant, first. Within each byte the bits shall be arranged with Bit 7, the most significant, first and Bit 0, the least significant bit, last.
- Letters and digits in parentheses represent numbers in hexadecimal notation.
- The setting of bits is denoted by ZERO or ONE.
- Numbers in binary notation and bit patterns are represented by strings of digits 0 and 1 shown with the most significant bit to the left. Within such strings, X may be used to indicate that the setting of a bit is not specified within the string.

5.2 Dimensions

Unless otherwise stated, all dimensions in the figures are in millimetres with a tolerance of ± 0,50 mm.

5.3 Names

The names of basic elements, e.g. specific fields, are written with a capital initial letter.

5.4 Alphanumeric string encoding

Unless otherwise stated, all alphanumeric strings shall be encoded using ISO/IEC 646.

6 Acronyms

ACN	Absolute CQ Sequence Number
BOT	Beginning of Tape
BBSNR	Broad Band Signal-to-Noise Ratio
BOW	Beginning of Wrap mark
CRC	Cyclic Redundancy Check character
DSIT	Data Set Information Table
ECC	Error-Correcting Code
EOD	End of Data
EOT	End of Tape
EOW	End of Wrap mark
FID	Format Identification Data Set
LPn	Logical Point, where n = 0 to 7
LPOS	Longitudinal Position
lsb	Least Signicant Bit
LSB	Least Significant Byte
msb	Most Significant Bit
MSB	Most Significant Byte
MSRT	Master Standard Reference Tape
RLL	Run Length Limited
RWW	Read-While-Write
SCQ	Synchronised Codeword Quad
SNR	Signal-to-Noise Ratio
SRA	Standard Reference Amplitude
SSRT	Secondary Standard Reference Tape
TRD	Test Recording Density

7 Environment and safety

The conditions specified below refer to the ambient conditions immediately surrounding the cartridge.

Copyright International Organization for Standardization
Reproduced by IHS under license with ISO
No reproduction or networking permitted without license from IHS
Not for Resale
© ISO/IEC 2002 – All rights reserved

7.1 Cartridge and tape testing environment

Unless otherwise stated, tests and measurements made on the cartridge and tape to check the requirements of this International Standard shall be carried out under the following conditions:

- temperature: 23 °C ± 2 °C
- relative humidity: 40 % to 60 %
- conditioning before testing: 24 h min.

7.2 Cartridge operating environment

Cartridges used for data interchange shall be capable of operating under the following conditions:

- temperature: 10 °C to 45 °C
- relative humidity: 10 % to 80 %
- wet bulb temperature: 26 °C max.

NOTE - Local tape temperature in excess of 52 °C may cause permanent tape damage.

If during storage and/or transportation a cartridge has been exposed to conditions outside the above values, it shall be conditioned before use by exposure to the operating environment for a time equal to, or greater than, the time away from the operating environment up to a maximum of 24 h. There shall be no deposit of moisture on or in the cartridge.

7.3 Cartridge storage environment

Cartridges shall be stored under the following conditions:

- temperature: 16 °C to 32 °C
- relative humidity: 20 % to 80 %
- wet bulb temperature: 26 °C max.

The stray magnetic field at any point on the tape shall not exceed 4 000 A/m. There shall be no deposit of moisture on or in the cartridge.

7.4 Tape tension

The tape between LP1 and LP6 shall not be subjected to a tension higher than 2,0 N under any circumstance. Outside of this area the tape shall not be subjected to a tension higher than 6,0 N.

7.5 Safety

The cartridge and its components shall satisfy the requirements of IEC 60950-1 when used in the intended manner or in any foreseeable use in an information processing system.

7.6 Flammability

The cartridge as an assembly shall be constructed such that, if ignited from a match flame, and when so ignited does not continue to burn in a still carbon dioxide atmosphere.

7.7 Transportation

Recommended limits for the environments to which a cartridge may be subjected during transportation, and the precautions to be taken to minimise the possibility of damage, are provided in annex G.

© ISO/IEC 2002 – All rights reserved
Copyright International Organization for Standardization
Reproduced by IHS under license with ISO
No reproduction or networking permitted without license from IHS
Not for Resale

Section 2 - Requirements for the Cartridge

8 Dimensional and Mechanical Characteristics of the Cartridge

8.1 Elements of the cartridge

The tape cartridge shall consist of the following elements:

- a case
- positioning notches
- handling notches
- a write-inhibit mechanism
- a reel for magnetic tape
- a locking mechanism for the reel
- a magnetic tape wound on the hub of the reel
- a leader pin
- a parking mechanism for the leader pin
- a sliding door
- a cartridge memory
- handling features

Dimensional characteristics are specified for those parameters deemed mandatory for interchange and compatible use of the cartridge. Where there is freedom of design, only the functional characteristics of the elements described are indicated. In the figures a typical implementation is represented in third angle projection.

Figure 1 : General view of the cartridge
Figure 2 : View of the Reference Planes A, B and C
Figure 3 : Bottom side
Figure 4 : Top side
Figure 5 : Rear side
Figure 6 : Front side
Figure 7 : Right side
Figure 8 : Left side with access door open
Figure 9 : Locking pad features in the reel
Figure 10 : Cross-section of the hub/brake assembly in the in-hand position
Figure 11 : Enlarged partial view from figure 10
Figure 12 : Cross-section of the hub/brake assembly in the cartridge-in-drive position
Figure 13 : Cross-section as viewed toward centre of reel through the teeth at diameter 37,50 mm
Figure 14 : Cross-section of a tooth part
Figure 15 : Leader pin assembly with attached tape seen from the top and from the side
Figure 16 : Leader pin assembly in parked position and detail of the door in closed position
Figure 17 : Leader pin assembly in parked position and door in open position, viewed from the left side
Figure 18 : Location of the LTO CM
Figure 19 : Handling grips and cartridge insertion indicator

8.2 Reference Planes of the case (figure 2)

Where they are purely descriptive, the dimensions are referred to three orthogonal reference planes – A, B, and C. Where the dimensions are related to the position of the cartridge in the drive, they may be referenced to Plane P.

Three locating areas A_1, A_2, and A_3 shall be in Plane A. Plane B is perpendicular to Plane A and passes through the centre of locating hole B_1 and the centreline of locating slot B_2. Plane C is perpendicular to Planes A and B and passes through the centre of locating hole B_1.

8.3 Dimensions of the case

The dimensions of the case shall be measured in the Test Environment. The dimensions of the case in any operating environment can be derived from the dimensions specified in this clause.

8.3.1 Overall dimension (figures 4, 6, 8)

The length of the case shall be

$l_1 = 102{,}00 \text{ mm} \pm 0{,}30 \text{ mm}$

Copyright International Organization for Standardization
Reproduced by IHS under license with ISO
No reproduction or networking permitted without license from IHS
Not for Resale
© ISO/IEC 2002 – All rights reserved

The width of the case shall be

l_2 = 105,40 mm ± 0,30 mm

The height of the case shall be

l_3 = 21,50 mm ± 0,25 mm

The height of the stacking features is not included in l_3.

The case shall have general radii for vertical edges and horizontal edges.

The radius of the specified vertical edges shall be

r_1 = 2,00 mm ± 0,50 mm

The radius of the specified horizontal edges shall be

r_2 = 1,00 mm ± 0,50 mm

All other features shall have general radii of 0,50 mm max.

8.3.2 Reference points for reference planes (figure 3)

The locating areas A_1, A_2, and A_3 shall be flush with the bottom of the cartridge. The locating area A_4 shall be within 0,25 mm from Plane A in the free state. These locating areas shall be non-textured to allow accurate locating of the cartridge on reference points in the mechanism and handling equipment.

The size and location of the four locating areas, A_1, A_2, A_3, and A_4 (see figure 3), are specified as follows.

The centre of locating area A_1 is on the intersection of Planes B and C, thus its position is specified by

l_4 = 20,50 mm ± 0,20mm

l_5 = 11,45 mm ± 0,20 mm

Its diameter shall be

d_1 = 7,80 mm min.

The locating area A_2 presents an oval area. The length shall be

l_6 = 1,80 mm min.

The radius at the end of the oval shall be

r_3 = 3,80 mm min.

The centre of locating area A_2 is on Plane B at a distance

l_7 = 86,15 mm ± 0,25mm

from Plane C.

The position of the rectangular locating area A_3 shall be

l_8 = 13,75 mm min.

l_9 = 4,75 mm min.

The position of the rectangular locating area A_4 shall be

l_{10} = 13,75 mm min.

l_{11} = 4,75 mm min.

The position of the locating features B_1 and B_2 for Plane B shall be specified as follows.

B_1 shall be centred within locating area A_1. It shall be a square hole of side

l_{12} = 3,00 mm ± 0,08mm

with rounded corners with a maximum radius of 1,00 mm.

B_2 shall be centred within location area A_2. It shall be a slot of side

l_{12} = 3,00 mm ± 0,08 mm

© ISO/IEC 2002 – All rights reserved
Copyright International Organization for Standardization
Reproduced by IHS under license with ISO
No reproduction or networking permitted without license from IHS
Not for Resale

Both B_1 and B_2 shall have a depth specified by

l_{13} = 5,00 mm min.

8.3.3 Positioning notches (figures 3, 6, 7)

There shall be three positioning notches, open toward the bottom side, and one secondary datum area on the front of the cartridge. Where surfaces have draft angle, dimensions shall be controlled at Plane A (except as noted), and the angle shall be 0° 45' nominal.

The location of the centre of the V-shaped notch shall be specified by

l_{14} = 81,95 mm ± 0,15 mm

l_{15} = 15,47 mm ± 0,15 mm

Its radius at the bottom shall be

r_4 = 1,50 mm max.

Its opening shall be

α_1 = 60° ± 1°

The depth of the V-shaped notch shall be

l_{16} = 8,90 mm min.

This notch position is measured with a 3,50 mm spherical probe, 3,0 mm above Plane A.

The dimensions of the two side notches shall be specified as follows.

Their dimension shall be

l_{17} = 47,50 mm ± 0,15 mm

The length of the notches shall be

l_{18} = 5,00 mm ± 0,15 mm

The width of the notches shall be

l_{19} = 2,80 mm min.

The depth of the notches shall be

l_{20} = 8,70 mm min.

The secondary datum area on the front of the cartridge shall be specified by

l_{300} = 8,00 mm min.

l_{301} = 7,50 mm max.

l_{302} = 13,50 mm min.

This surface may have draft from Plane A and shall be located at a distance from Plane B by

l_{303} = 20,36 mm ± 0,10 mm

when measured with a spherical probe, 3,0 mm above Plane A.

8.3.4 Handling notches (figures 3, 4, 7)

There shall be three notches used for handling. They shall be specified as follows:

The dimensions of the bottom notches shall be

l_{21} = 81,00 mm ± 0,25 mm

l_{22} = 82,00 mm ± 0,25 mm

l_{23} = 6,00 mm ± 0,25 mm

Copyright International Organization for Standardization
Reproduced by IHS under license with ISO
No reproduction or networking permitted without license from IHS
Not for Resale
© ISO/IEC 2002 – All rights reserved

The width of the bottom notches shall be

l_9 = 4,75 mm min.

The depth of the bottom notches shall be

l_{20} = 8,70 mm min.

The dimensions of the side notch shall be

l_{24} = 6,00 mm ± 0,50 mm

l_{25} = 18,00 mm ± 0,50 mm

α_2 = 30° ± 2°

α_3 = 60° ± 2°

l_{26} = 2,25 mm ± 0,50 mm

l_{27} = 10,75 mm ± 0,50 mm

8.3.5 Mis-insertion protection (figures 4, 6)

The cartridge shall have a cut-out in the front side of the case to prevent the cartridge from being inserted into the drive in the wrong orientation. This feature further prevents the use of unsuitable cartridges of similar, but not identical, construction.

The depth of the notch shall be

l_{28} = 5,00 mm ± 0,25 mm

The surface it forms shall be defined by l_{29} = 16,80 mm nominal and the tangent to an arc r_5 = 51,50 mm nominal with the same centre as the central window as described in 8.3.8. The actual surface shall be within 0,50 mm of this nominal geometry.

8.3.6 Stacking features (figures 3, 4, 5, 8)

The bottom side of the case shall have four parallel stacking ribs. The dimensions shall be

l_{30} = 3,00 mm ± 0,20 mm

l_{31} = 67,45 mm ± 0,20 mm

l_{32} = 6,00 mm ± 0,20 mm

l_{108} = 1,20 mm max.

l_{200} = 50,00 mm ± 0,30 mm

The corners shall have a radius

r_6 = 0,60 mm min.

The height shall be defined by

l_{33} = 0,50 mm ± 0,15 mm (measured locally around each pad)

The top side of the case shall have recess areas for the stacking ribs to fit into. The dimensions shall be

l_{34} = 67,45 mm ± 0,30 mm

l_{35} = 6,60 mm ± 0,30 mm

l_{36} = 4,30 mm ± 0,30 mm

l_{201} = 50,00 mm ± 0,30 mm

The depth of the recess areas shall be

l_{37} = 0,85 mm min. (measured locally around each recess)

The radii of the recess areas shall be

r_7 = 0,35 mm max.

© ISO/IEC 2002 – All rights reserved
Copyright International Organization for Standardization
Reproduced by IHS under license with ISO
No reproduction or networking permitted without license from IHS
Not for Resale

8.3.7 Label area of the rear side (figure 5)

There shall be one label area on the rear side of the case.

The distance of the bottom edge of the label area from the bottom side of the case shall be

l_{38} = 2,00 mm ± 0,25 mm

It shall be recessed from the rear side by 0,20 mm min. and 0,50 mm max.

The radii of the corners shall be

r_8 = 1,25 mm max.

The distance of the edge of the label area from the left side of the case shall be

l_{40} = 7,50 mm ± 0,25 mm

The width of the label area shall be

l_{41} = 80,00 mm ± 0,35 mm

The top of the label area shall be

l_{42} = 19,50 mm ± 0,35 mm

8.3.8 Central window (figure 3)

The bottom side of the case shall have a central window to allow penetration of the drive spindle into the hub.

Its diameter shall be

d_3 = 40,00 mm min.

Its centre shall be defined by

l_{43} = 42,45 mm ± 0,15 mm

l_{44} = 30,50 mm ± 0,15 mm

8.3.9 Sliding door (figures 8, 16)

On the left side of the cartridge, there shall be a door that slides toward the rear of the cartridge when opened. This door shall be held in place by features internal to the case. The force required to slide the door fully open shall be no greater than 1,30 N at l_{50} dimension. The cartridge means to close the door shall provide a minimum of 0,20 N closing force at the fully closed position.

The door shall have a feature for opening as detailed with the following dimensions

l_{250} = 10,00 mm min.

r_9 = 0,50 mm ± 0,25 mm

l_{46} = 0,75 mm max. (no protrusion beyond cartridge case)

l_{47} = 0,60 mm ± 0,25 mm

l_{48} = 2,95 mm min.

The door shall provide protection on one side of the cartridge and when in the open position, the door shall provide the opening as outlined in 8.3.10.

8.3.10 Case opening (figures 8, 16)

The case shall have an opening that is visible when the door is in the open position. This opening is where the leader pin assembly is seated.

The opening shall be defined by

l_{45} = 12,50 mm ± 0,25 mm (located with respect to the centreline shown)

l_{49} = 17,20 mm min.

l_{50} = 4,00 mm min.

r_{10} = 2,50 mm max.

r_{11} = 1,00 mm ± 0,25 mm

Copyright International Organization for Standardization
Reproduced by IHS under license with ISO
No reproduction or networking permitted without license from IHS
Not for Resale
© ISO/IEC 2002 – All rights reserved

8.4 Write-inhibit mechanism (figures 3, 5)

The write-inhibit mechanism shall have a flat surface identified by a visual lock mark, such as a padlock on the rear of the cartridge, when in the position in which writing is inhibited. In the write-enabled position the surface of the write-inhibit mechanism shall be flush to 0,30 mm from the bottom surface of the cartridge case. In the write-inhibit position the write-inhibit mechanism shall be at a minimum distance of 5,00 mm from the bottom surface. The force needed to move the write-inhibit assembly, when applied tangentially to the surface of the cartridge, shall be in the range 2 N to 7 N.

The target area for sensing on the bottom of the case shall be

l_{51} = 77,50 mm ± 0,20 mm

l_{52} = 82,95 mm ± 0,20 mm

The sensing area on the bottom of the case shall be defined by

d_4 = 4,00 mm min.

The write-inhibit indication window on the rear side of the case shall be defined by

l_{53} = 7,50 mm ± 0,50 mm

l_{54} = 14,50 mm ± 0,50 mm

l_{55} = 5,75 mm ± 0,50 mm

l_{56} = 15,75 mm ± 0,50 mm

8.5 Flexibility of the case

The flexibility of the top and bottom sides of the case of the assembled cartridge (see figure 4) is the amount of deflection observed when they are subjected to a perpendicular force, with the cartridge resting on a flat surface.

8.5.1 Requirements

The case shall not deflect by more than 2,50 mm max. when a force of 35,0 N is applied as described in 8.5.2.

8.5.2 Procedure

Measure the flexibility of the case in a universal testing machine operating in compression mode, using a suitable load cell for the test.

Apply a single point load with a radius of 10 mm ± 1 mm to the top side of the case at the point shown in figure 4 and specified by

l_{57} = 53,90 mm nominal

l_{58} = 76,00 mm nominal

Repeat for the bottom side at the same point and specified by the same method.

8.6 Tape reel

8.6.1 Locking mechanism (figure 9)

The locking mechanism for the tape reel maintains pack tension during shipping and storage over the allowable range of environmental conditions. Functionally, it shall satisfy the following requirements in the locked position:

– the angular resolution shall not be greater than 3º

– the reel shall not rotate by more than 10º when a torque not greater than 0,32 N·m is applied in the direction that will cause the tape to unwind

The locking mechanism shall have an interface to the drive through 3 pads protruding through the toothed rim. The dimensions of the locking pads shall be

r_{12} = 17,50 mm nominal

l_{59} = 1,00 mm min.

l_{60} = 3,00 mm min.

--`,,`,,`-`-`,,`,,`,`,,`---

© ISO/IEC 2002 – All rights reserved
Copyright International Organization for Standardization
Reproduced by IHS under license with ISO
No reproduction or networking permitted without license from IHS
Not for Resale

and no larger than the space from removal of 2 or 3 teeth of the toothed rim per locking pad. The locking pads shall be centred on the mating tooth (for 2 teeth removed) or teeth (for 3 teeth removed). The angle between the locking pads shall be

α_5 = 120,00° nominal

These pads shall be flush within 0,10 mm with the flats on the toothed rim in the locked or in hand position. With the cartridge in the drive, the pads shall be recessed 1,80 mm ± 0,15 mm from the flats on the toothed rim. The ends of the locking pads shall have no sharp corners, edges, or burrs. The force required to move the three locking pads into this position shall be greater than 2,80 N at the in-hand position and not exceed 5,00 N at the in-drive position. The 3 pads protruding through the toothed rim shall be non-metallic.

8.6.2 Axis of rotation of the reel (figure 3)

The axis of rotation of the reel shall be perpendicular to Plane P and pass through the centre of the central window as specified by l_{43} and l_{44}.

8.6.3 Reel flanges (figure 12)

The outside diameter of the reel flanges shall be

d_5 = 96,80 mm min.

There shall be a radius on the tape side of the flanges at the outside diameter

r_{200} = 0,50 mm ± 0,25 mm

The distance from the inside of the lower flange of the reel to Plane P shall be

l_{66} = 1,92 mm ± 0,10 mm at the hub diameter d_9

The distance from the inside of the upper flange of the reel at the hub diameter d_9 to Plane P shall be

l_{62} = 14,88 mm ± 0,10 mm at the hub diameter d_9

The distance from the inside of the lower flange of the reel at the flange outer diameter d_5 shall be

l_{63} = 1,78 mm ± 0,12 mm at the flange outer diameter d_5

The distance from the inside of the upper flange of the reel at the flange outer diameter d_5 shall be

l_{600} = 15,02 mm ± 0,12 mm at the flange outer diameter d_5

The maximum lower flange total indicated runout shall be 0,165 mm for any diameter along the tapered surface. The maximum upper flange total indicated runout shall be 0,165 mm for any diameter along the tapered surface.

There shall be a minimum taper of 0,03 mm on both upper and lower flanges with no negative taper areas on the surface. Taper is defined by the difference between the minimum height of the flange at the inner diameter circumference and the maximum height of the flange at the outer diameter circumference, both measured relative to the Plane P for the bottom flange.

The minimum hub height (flange to flange spacing) at the diameter d_9 shall be 12,78 mm.

The radius at the intersection of the flanges and the outer surface of the hub shall be

r_{13} = 0,08 mm max.

8.6.4 Metallic insert (figures 9, 11, 12)

The reel shall have a metallic insert made of low carbon steel (AISI 1005 through 1095), with nickel plating to prevent corrosion.

The thickness shall be

l_{61} = 1,00 mm ± 0,06 mm

The outer diameter shall be

d_6 = 30,00 mm ± 0,25 mm

The inner diameter shall be

d_7 = 9,00 mm ± 0,25 mm

and shall be concentric with the axis of rotation within 0,20 mm.

Copyright International Organization for Standardization
Reproduced by IHS under license with ISO
No reproduction or networking permitted without license from IHS
Not for Resale
© ISO/IEC 2002 – All rights reserved

The metallic insert shall be parallel to Plane P within 0,15 mm.

It shall withstand a pull out force of 150 N min.

If holes are used in the insert to improve pull-out retention between the insert and molded reel, they shall not exceed 10,0 mm^2 total area.

8.6.5 Toothed rim (figures 9, 12, 14)

The reel shall have a toothed rim accessible through the central window. Its dimensions shall be

d_{16} = 30,50 mm ± 0,75 mm

d_8 = 40,00 mm ± 0,25 mm

8.6.6 Hub of the reel (figure 12)

The diameter of the hub shall be

d_9 = 44,00 mm ± 0,10 mm

The hub shall meet the following requirements:

- the straightness of the hub surface shall be within 0,04 mm
- the perpendicularity to Plane P (see 8.6.8 for Plane P definition) shall be within 0,07 mm
- conical taper shall not exceed 0,4 %
- the rate of change of diameter d_9 across the width of the hub surface shall not exceed 0,025 mm per mm
- the total runout of the hub relative to the cylinder perpendicular to the circular pitch line of the teeth of the toothed rim shall not exceed 0,10 mm total indicator reading (TIR)

8.6.7 Relative positions of hub and case (figures 3, 9, 10, 11, 12)

With the cartridge held in the hand

The distance from the surface of the flats of the toothed rim to Plane A shall be

l_{64} = 0,25 mm ± 0,25 mm

The d_{16} dimension of the reel shall be centred to the central window d_3 (figure 3) within 0,25 mm in the bottom or horizontal orientation and within 0,30 mm in the vertical orientation (resting on right or left side).

With the cartridge in the hand or in the drive

The distance from the bottom surface of the metallic insert to Plane P shall be

l_{65} = 1,40 mm ± 0,10 mm

With the cartridge in the drive

The distance from the tips of the three locking pads to Plane A shall be

l_{67} = 3,25 mm ± 0,25 mm

The distance from Plane A to Plane P shall be

l_{69} = 2,35 mm ± 0,15 mm

A minimum clearance of 0,50 mm shall be maintained between the reel and the inside surfaces of the case for all tolerance conditions and feature sizes.

8.6.8 Characteristics of the toothed rim (figures 9, 13, 14)

The toothed rim shall contain no fewer than 42 teeth, spaced at an angle of

α_6 = 6° ± 10 ' non-cumulative

If fewer than 54 teeth (60 minus 3 sets of 2 for the locking pads) are provided, the teeth shall be grouped into 6 contiguous groups, symmetrically arranged adjacent to the locking pads with no gaps greater than 3 teeth.

The teeth are specified at the pitch diameter 37,50 mm.

© ISO/IEC 2002 – All rights reserved

Copyright International Organization for Standardization
Reproduced by IHS under license with ISO
No reproduction or networking permitted without license from IHS
Not for Resale

The theoretical tip to tip dimension shall be

l_{70} = 2,321 4 mm

Plane P is a plane defined by the pitch line of the hub teeth at the 37,50 mm diameter.

Plane P shall be defined at the distance l_{71} = 1,160 7 mm or halfway between the theoretical tips of a complete tooth.

The angle of the teeth shall be defined by

α_7 = 30° nominal

α_8 = 15° nominal

the error of the tooth angle α_7 and α_8 shall be less than or equal to 10 ' (non-cumulative).

The pitch line shall be the circumference of the teeth in Plane P.

The flat at the tips of the teeth shall be defined by

l_{72} = 0,90 mm ± 0,05 mm

The trough at the bottom of the tooth shall be defined by

l_{73} = 1,16 mm min. centre of radius

l_{74} = 0,50 mm ± 0,20 mm

The geometry of the toothed rim around the outside diameter (figure 14) shall be

d_{10} = 37,85 mm min.

d_{11} = 39,00 mm ± 0,15 mm

α_9 = 45° ± 5°

8.7 Magnetic tape

8.7.1 Tape wind

When the cartridge is viewed from the top side, turning the hub counter-clockwise shall wind tape onto the hub, with the recording surface toward the outside (away from the hub).

The end of the tape shall not be attached to the hub.

8.7.2 Wind tension

The tape shall be wound with a tension of 1,00 N ± 0,40 N.

8.7.3 Circumference of the tape reel

For the following lengths of tape (see 9.2), the circumference of a wound tape shall be

Type A 295,33 mm nominal

Type B 234,06 mm nominal

Type C 204,48 mm nominal

Type D 169,82 mm nominal

8.7.4 Moment of inertia

The moment of inertia of the reel and tape shall be

For the empty reel $28{,}40 \times 10^{-6}$ kg·m^2 ± $2{,}84 \times 10^{-6}$ kg·m^2

For Type A $16{,}69 \times 10^{-5}$ kg·m^2 ± $1{,}67 \times 10^{-5}$ kg·m^2

For Type B $7{,}88 \times 10^{-5}$ kg·m^2 ± $0{,}78 \times 10^{-5}$ kg·m^2

For Type C $5{,}49 \times 10^{-5}$ kg·m^2 ± $0{,}55 \times 10^{-5}$ kg·m^2

For Type D $3{,}73 \times 10^{-5}$ kg·m^2 ± $0{,}37 \times 10^{-5}$ kg·m^2

Copyright International Organization for Standardization
Reproduced by IHS under license with ISO
No reproduction or networking permitted without license from IHS
Not for Resale
© ISO/IEC 2002 – All rights reserved

8.7.4.1 Procedure

Torsionally oscillate the reel on an inertial dynamics unit. Measure the period of oscillation with a universal counter. Convert the period of oscillation to its rotational value.

8.8 Leader pin assembly

8.8.1 Leader pin assembly dimensions (figure 15)

The leader pin assembly shall have the following dimensions

l_{75} = 19,46 mm ± 0,04 mm

l_{76} = 1,480 mm ± 0,075 mm

l_{77} = 3,130 mm ± 0,075 mm

d_{12} = 2,90 mm ± 0,20 mm

l_{78} = 13,200 mm ± 0,075 mm

l_{79} = 17,980 mm ± 0,075 mm

d_{13} = 3,20 mm ± 0,05 mm

d_{14} = 1,60 mm ± 0,05 mm

r_{14} = 0,05 mm min.

r_{15} = 14,75 mm ± 4,75 mm (no sharp points or cut-off nibs allowed)

r_{16} = 0,20 mm ± 0,10 mm

The leader pin assembly shall be made from non-magnetic materials with maximum magnetic level of 3 200 A/m.

8.8.2 Leader tape attachment to leader pin assembly (figure 15)

The leader tape shall be attached to the leader pin assembly centred to l_{78} within 0,15 mm.

The leader tape shall be retained to the leader pin assembly by means that shall not protrude beyond d_{12}.

The bottom edge of the tape (as seen in figure 15) shall be perpendicular to the axis of the leader pin assembly (centre of d_{14}) within 0,50 mm over the first 150,0 mm of tape.

The leader pin assembly shall not detach from the tape when a force of 16 N is applied normal to the pin assembly, over all operating environmental conditions (see 7.2).

If the leader pin assembly has a portion of diameter d_{12} open, the tape shall be wrapped around the central pin as shown in figure 15, so that the open section faces the front of the cartridge. The open section shall not be more than 120° of the cylinder and the free end of the tape shall not extend more than 1,50 mm beyond d_{12}.

8.8.3 Latching the leader pin assembly in the case (figures 16, 17)

This International Standard does not specify the implementation of the latching mechanism for the leader pin assembly. This International Standard specifies the position of the leader pin assembly and the forces required to pull it out of the cartridge and to insert it into the cartridge.

When the leader pin assembly is latched into the case, the point shall be defined by

l_{80} = 13,50 mm nominal

l_{81} = 6,30 mm nominal

The leader pin assembly shall fall within a circle of radius 0,25 mm.

The leader pin assembly parking position relative to Plane A shall be

l_{82} = 1,00 mm ± 0,20 mm

The leader pin assembly parking position shall have a lead-in defined by

α_{10} = 20° ± 2°

α_{11} = 10° ± 2°

l_{83} = 1,00 mm nominal

© ISO/IEC 2002 – All rights reserved

Copyright International Organization for Standardization
Reproduced by IHS under license with ISO
No reproduction or networking permitted without license from IHS
Not for Resale

l_{84} = 1,50 mm nominal

l_{304} = 3,50 mm nominal

and r_{17} = 0,20 mm min. (no sharp edges or flash permitted)

l_{305} = 0,40 mm min.

l_{306} = 0,90 mm min.

This lead-in area shall have no sharp edges or flash and shall be recessed from the outside of the case by

l_{85} = 0,50 mm ± 0,20 mm

The limits on the insertion force shall be met when the leader pin assembly is positioned within 0,60 mm toward the front of the cartridge, or 1,34 mm toward the rear of the cartridge from the nominal parking position as defined by l_{80} and l_{81}.The extraction and insertion force, i.e. the force required to pull (push) the leader pin assembly and the tape attached to it out of (into) the cartridge, shall be greater than 0,50 N and less than 1,50 N, measured perpendicular to the Plane of the door opening.

The retention means and/or geometry described above shall maintain the leader pin assembly position when a force of 6 N is applied to the leader pin assembly toward the right side of the cartridge, or at any angle up to

α_{14} = 85°

from the right side toward the front of the cartridge. See figure 16.

8.8.4 Mechanism and tape exit keepout area (figure 16, 17)

The cartridge shall have volume clear of any components or material for access by the mechanism and tape travel. The total volume reserved for mechanism keepout and tape travel shall be defined by

l_{202} = 2,10 mm max.

l_{203} = 4,40 mm min.

l_{204} = 1,90 mm min.

l_{205} = 3,00 mm max.

l_{206} = 17,25 mm min.

l_{207} = 18,00 mm min.

l_{208} = 18,50 mm min.

l_{209} = 7,45 mm min.

l_{210} = 14,70 mm min. about the centreline of the cartridge

l_{211} = 2,30 mm max.

l_{212} = 19,10 mm min.

8.9 LTO CM (figure 18)

Figure 18 shows the general layout of the LTO CM, showing the top view of a case bottom half and left side (or leader pin assembly side) as described in figure 1. The dimensions of the device shall be

l_{86} = 20,00 mm ± 0,50 mm

l_{87} = 10,00 mm ± 0,50 mm

l_{88} = 0,80 mm ± 0,20 mm

r_{18} = 2,50 mm ± 0,50 mm

The location of the LTO CM in the case and the dimensions controlling its position shall be

l_{89} = 1,50 mm ± 0,25 mm

l_{90} = 1,50 mm ± 0,25 mm

l_{91} = 5,00 mm ± 0,30 mm

α_{12} = 45° ± 3°

Copyright International Organization for Standardization
Reproduced by IHS under license with ISO
No reproduction or networking permitted without license from IHS
Not for Resale

© ISO/IEC 2002 – All rights reserved

No metal components shall be closer than 2,00 mm to the LTO CM.

8.10 Areas reserved for cartridge presence sensing (figure 3)

The following areas shall have material present in Plane A, in order to allow mechanisms to sense that the cartridge is properly seated in the drive.

Location 1 shall be

l_{51} = 77,50 mm ± 0,20 mm

l_{93} = 88,45 mm ± 0,20 mm

d_{15} = 4,00 mm min.

Location 2 shall be

l_{109} = 18,00 mm ± 0,20 mm

l_{110} = 24,00 mm ± 0,20 mm

d_{17} = 5,50 mm max. (within edge of cartridge)

8.11 Handling grips and insertion indicator (figure 19)

There shall be features on the top, bottom and sides of the cartridge to provide a positive grip for manual handling of the cartridge, and an arrow indicating the proper insertion direction of the cartridge into a mechanism. These features shall be moulded into the respective surfaces, 0,30 mm ± 0,10 mm deep.

8.11.1 Side grips

The grip feature on each side of the cartridge shall be described by

l_{94} = 1,20 mm ± 0,20 mm (6 places)

l_{95} = 9,00 mm ± 0,25 mm

l_{96} = 0,90 mm ± 0,20 mm (5 places)

l_{97} = 2,50 mm ± 0,25 mm

8.11.2 Insertion indicator

The indicator for proper insertion direction shall be centred side to side on the top of the cartridge, and shall be defined by

l_{98} = 4,70 mm ± 0,30 mm

α_{13} = 86,0° ± 3,0°

and an arc with centre and radius shall be defined by

l_{99} = 36,00 mm ± 0,40 mm

l_{100} = 52,70 mm ± 0,40 mm (the centreline of the cartridge)

r_{19} = 24,0 mm ± 0,40 mm

8.11.3 Top grip

The grip feature on the top of the cartridge shall be described by

l_{101} = 0,90 mm ± 0,20 mm (9 places)

l_{102} = 1,20 mm ± 0,20 mm (10 places)

r_{20} = 50,0 mm ± 0,40 mm

r_{21} = 46,0 mm ± 0,40 mm

r_{22} = 35,0 mm ± 0,40 mm (2 places)

r_{23} = 39,0 mm ± 0,40 mm (2 places)

r_{20} and r_{21} are from the centre located by

© ISO/IEC 2002 – All rights reserved
Copyright International Organization for Standardization
Reproduced by IHS under license with ISO
No reproduction or networking permitted without license from IHS
Not for Resale

l_{103} = 25,00 mm ± 0,40 mm

l_{100} = 52,70 mm ± 0,40 mm

r_{22} and r_{23} shall be from the centre located by

l_{104} = 39,00 mm ± 0,40 mm and tangent to r_{20} and r_{21} respectively

8.11.4 Bottom grip

The grip feature on the bottom of the cartridge shall be described by

l_{105} = 1,20 mm ± 0,20 mm (6 places)

l_{106} = 0,90 mm ± 0,20 mm (5 places)

r_{24} = 18,0 mm ± 0,40 mm

r_{25} = 13,0 mm ± 0,40 mm

with centre located by the rear of the cartridge and

l_{107} = 53,90 mm ± 0,50 mm (the centre of the window for the hub)

8.12 Pad Printing Areas (figure 19)

The cartridge shall have two areas designated for pad printing, logo moulding, or labeling as defined by the following dimensions:

l_{213} = 15,00 mm nominal from the centreline of the cartridge

l_{214} = 15,00 mm nominal from the centreline of the cartridge

l_{215} = 5,00 mm nominal from the curve bound by the handling grip

l_{216} = 5,00 mm nominal from the outside edge of the cartridge

The second area shall be the mirror image of the first area reflected about the centreline of the cartridge.

8.13 Opacity

There shall be less than 5 % transmission passing through any two walls of the cartridge case for wavelengths from 600 nm to 1 100 nm.

Copyright International Organization for Standardization
Reproduced by IHS under license with ISO
No reproduction or networking permitted without license from IHS
Not for Resale

© ISO/IEC 2002 – All rights reserved

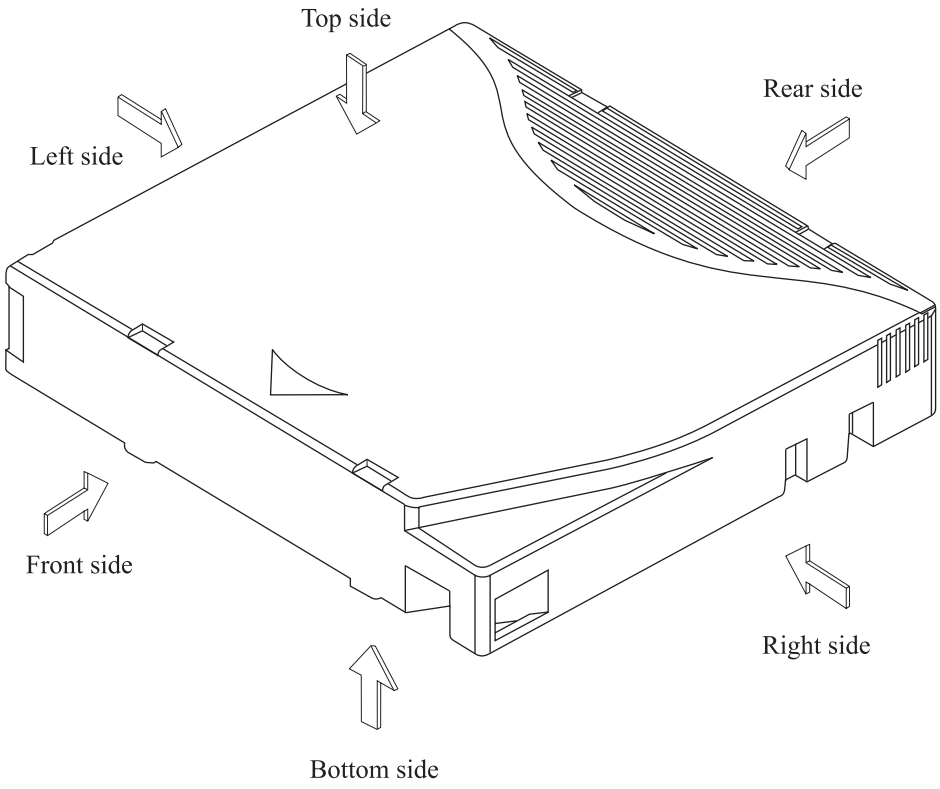

Figure 1 - General view of the cartridge

© ISO/IEC 2002 – All rights reserved
Copyright International Organization for Standardization
Reproduced by IHS under license with ISO
No reproduction or networking permitted without license from IHS
Not for Resale

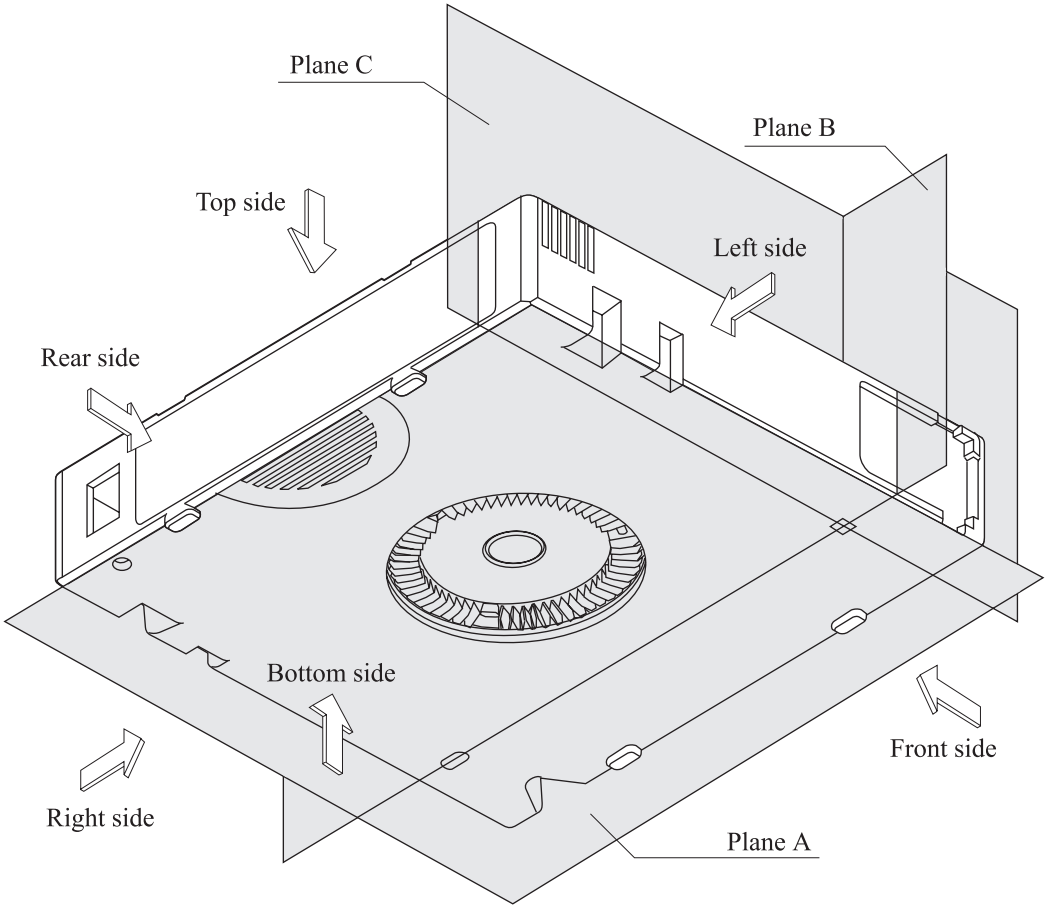

Figure 2 - View of the Reference Planes A, B, and C

Copyright International Organization for Standardization
Reproduced by IHS under license with ISO
No reproduction or networking permitted without license from IHS
Not for Resale
© ISO/IEC 2002 – All rights reserved

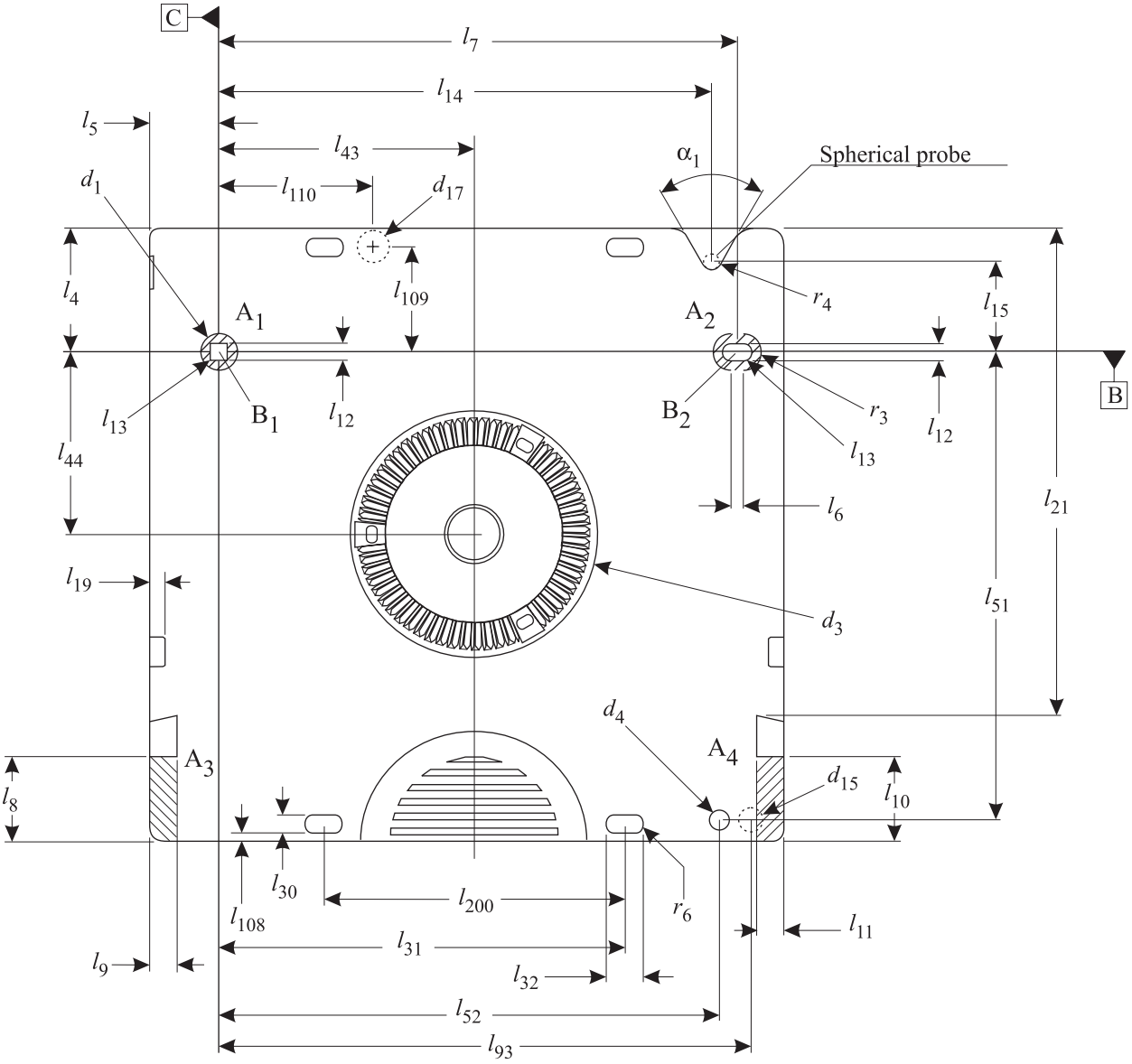

Figure 3 - Bottom side

© ISO/IEC 2002 – All rights reserved
Copyright International Organization for Standardization
Reproduced by IHS under license with ISO
No reproduction or networking permitted without license from IHS
Not for Resale

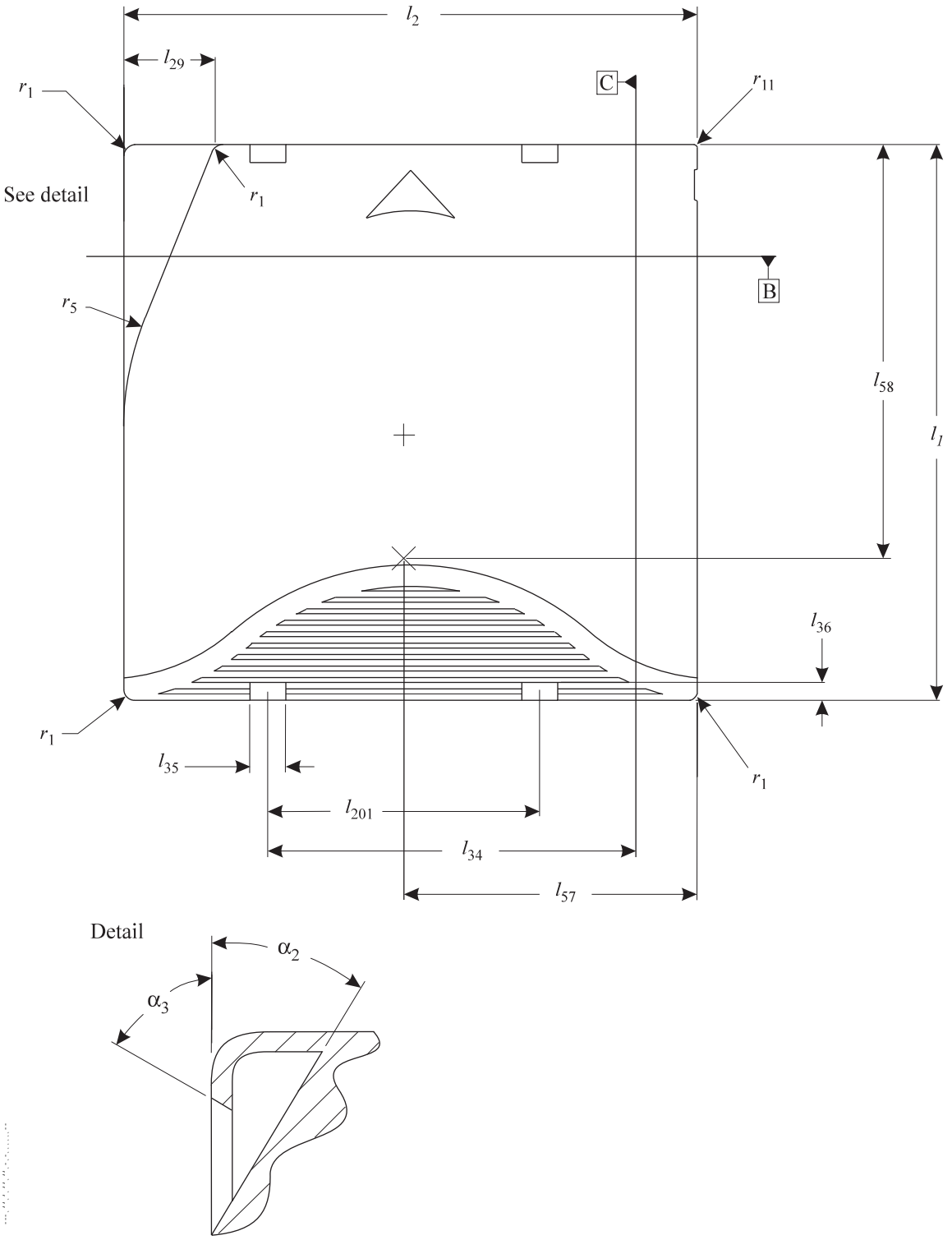

Figure 4 - Top side

Copyright International Organization for Standardization
Reproduced by IHS under license with ISO
No reproduction or networking permitted without license from IHS
Not for Resale
© ISO/IEC 2002 – All rights reserved

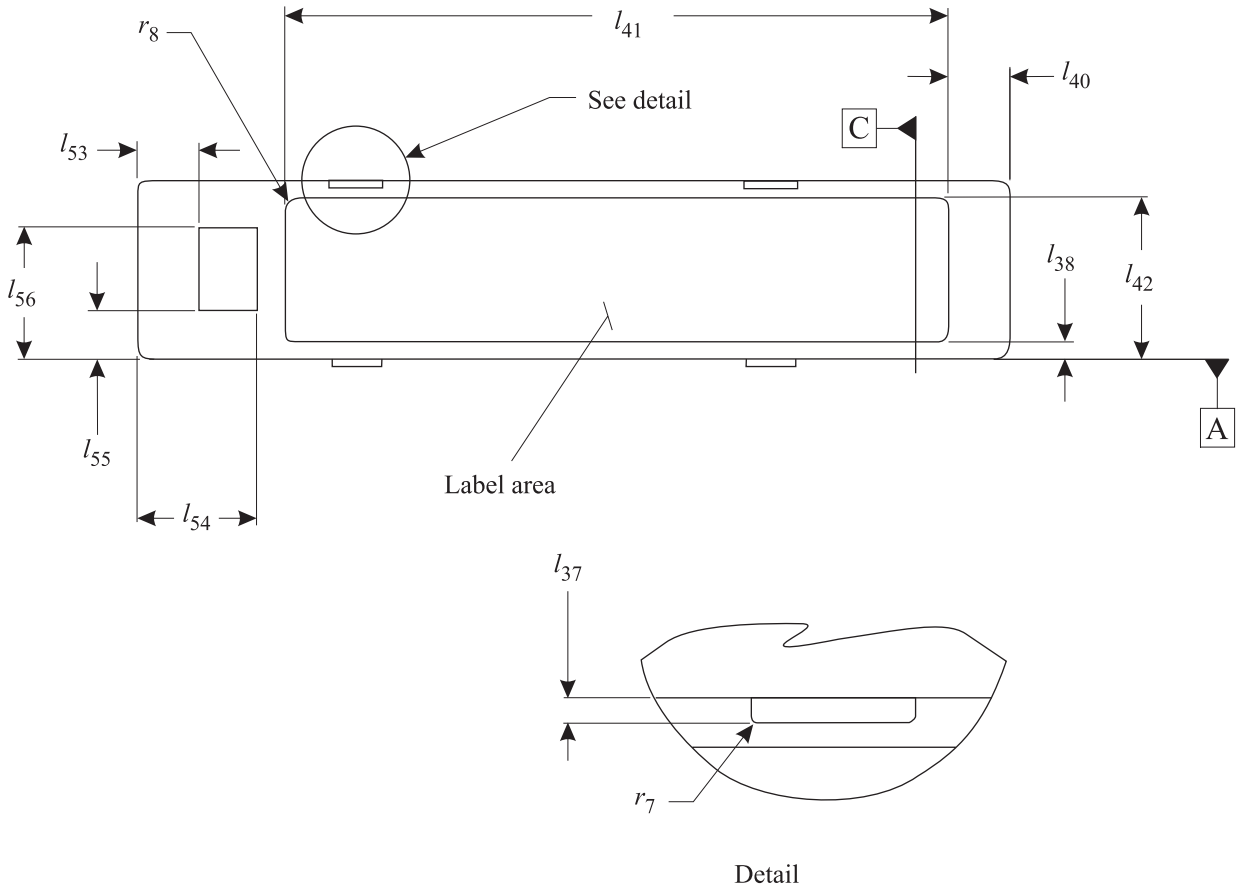

Figure 5 - Rear side

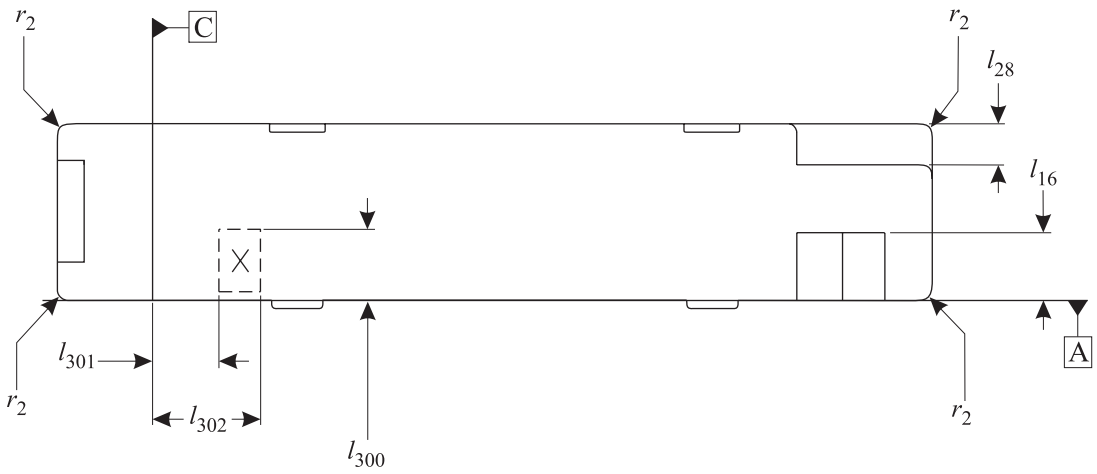

Figure 6 - Front side

© ISO/IEC 2002 – All rights reserved
Copyright International Organization for Standardization
Reproduced by IHS under license with ISO
No reproduction or networking permitted without license from IHS
Not for Resale

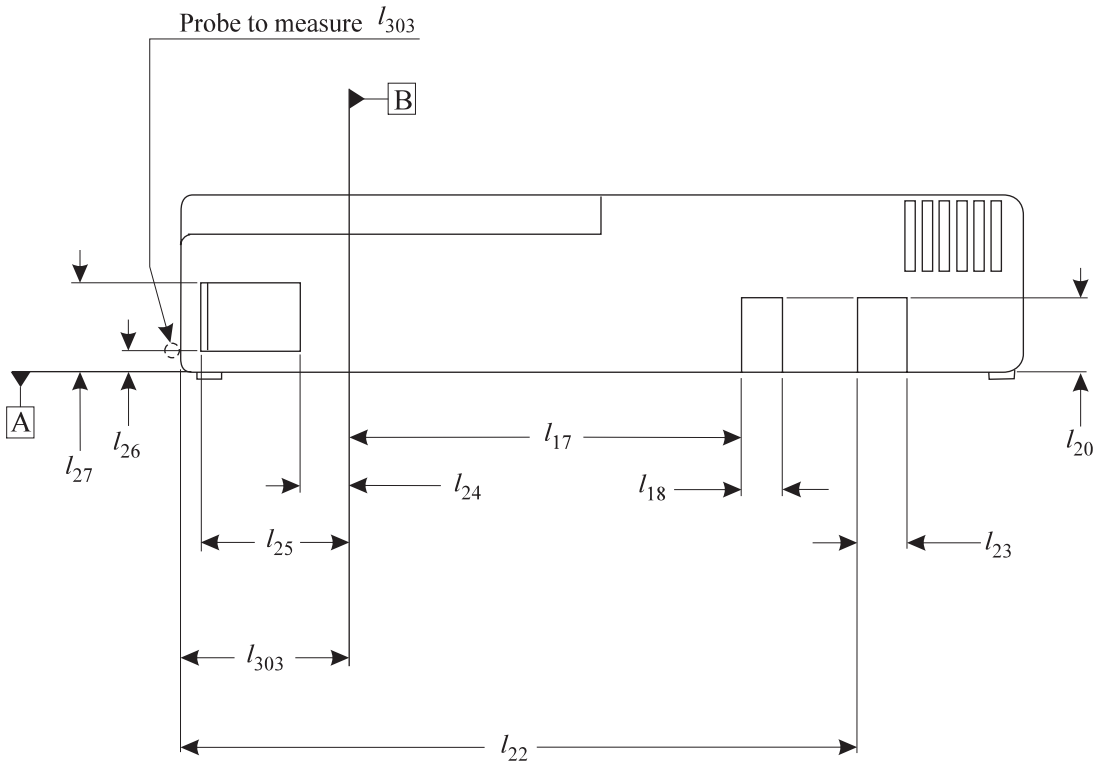

Figure 7 - Right side

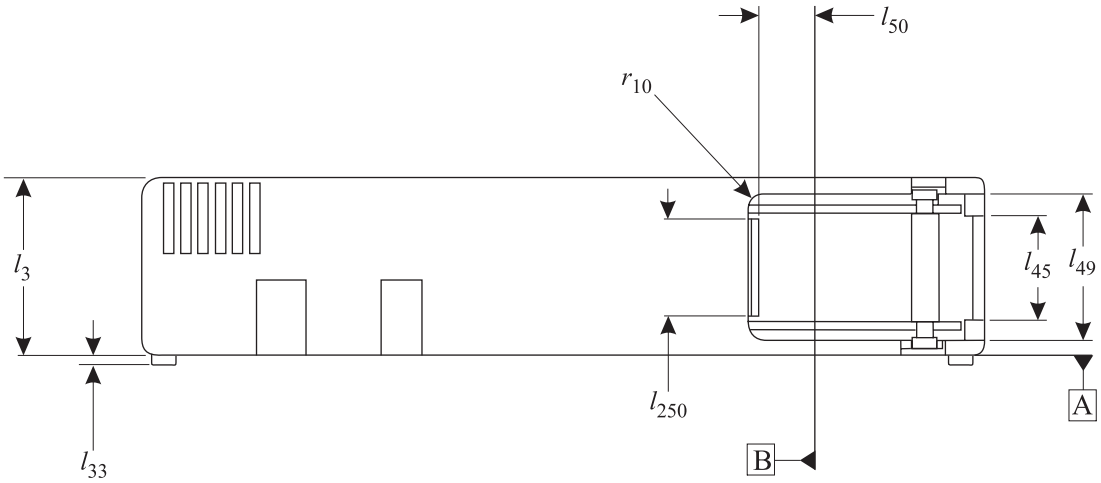

Figure 8 - Left side with access door open

Copyright International Organization for Standardization
Reproduced by IHS under license with ISO
No reproduction or networking permitted without license from IHS
Not for Resale
© ISO/IEC 2002 – All rights reserved

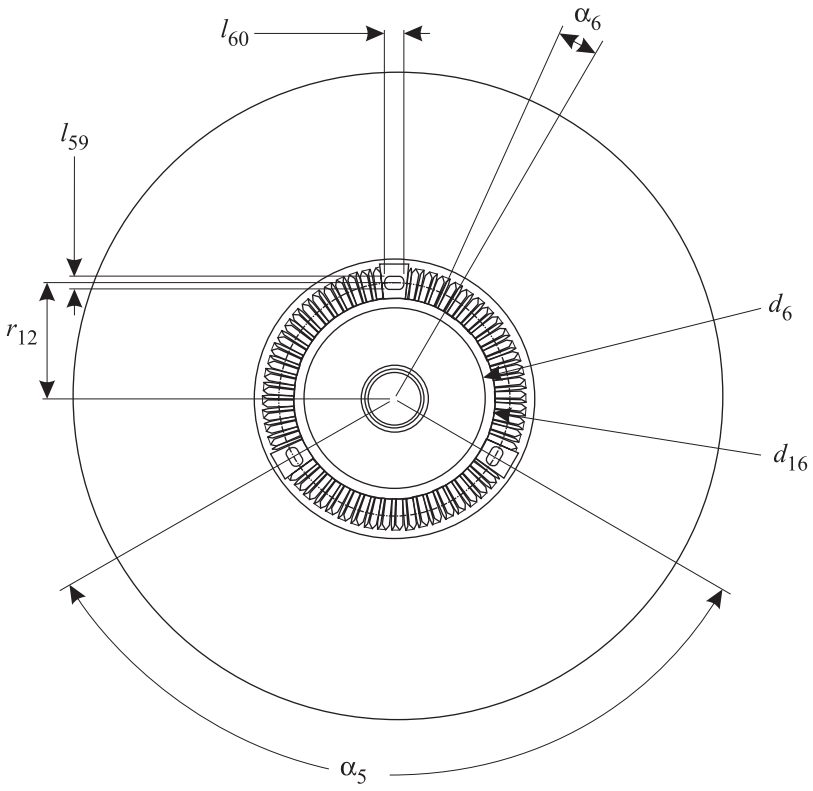

Figure 9 - Locking pad features in the reel

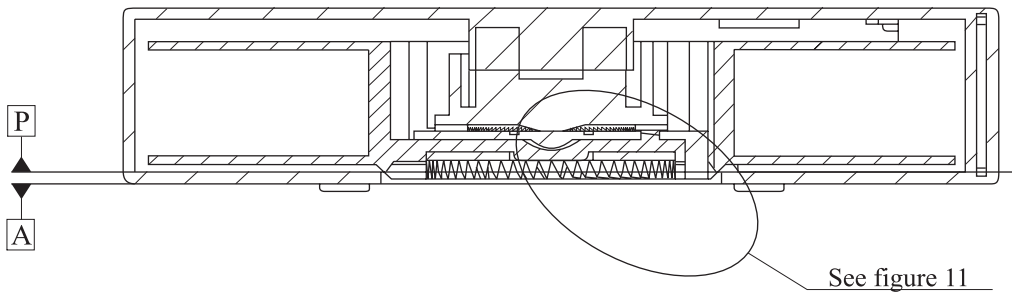

Figure 10 - Cross-section of the hub/brake assembly in the in-hand position

© ISO/IEC 2002 – All rights reserved
Copyright International Organization for Standardization
Reproduced by IHS under license with ISO
No reproduction or networking permitted without license from IHS
Not for Resale

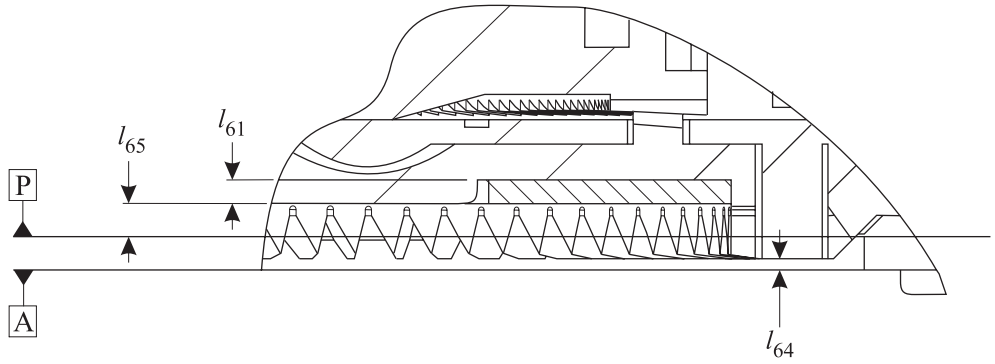

Figure 11 – Enlarged partial view from figure 10

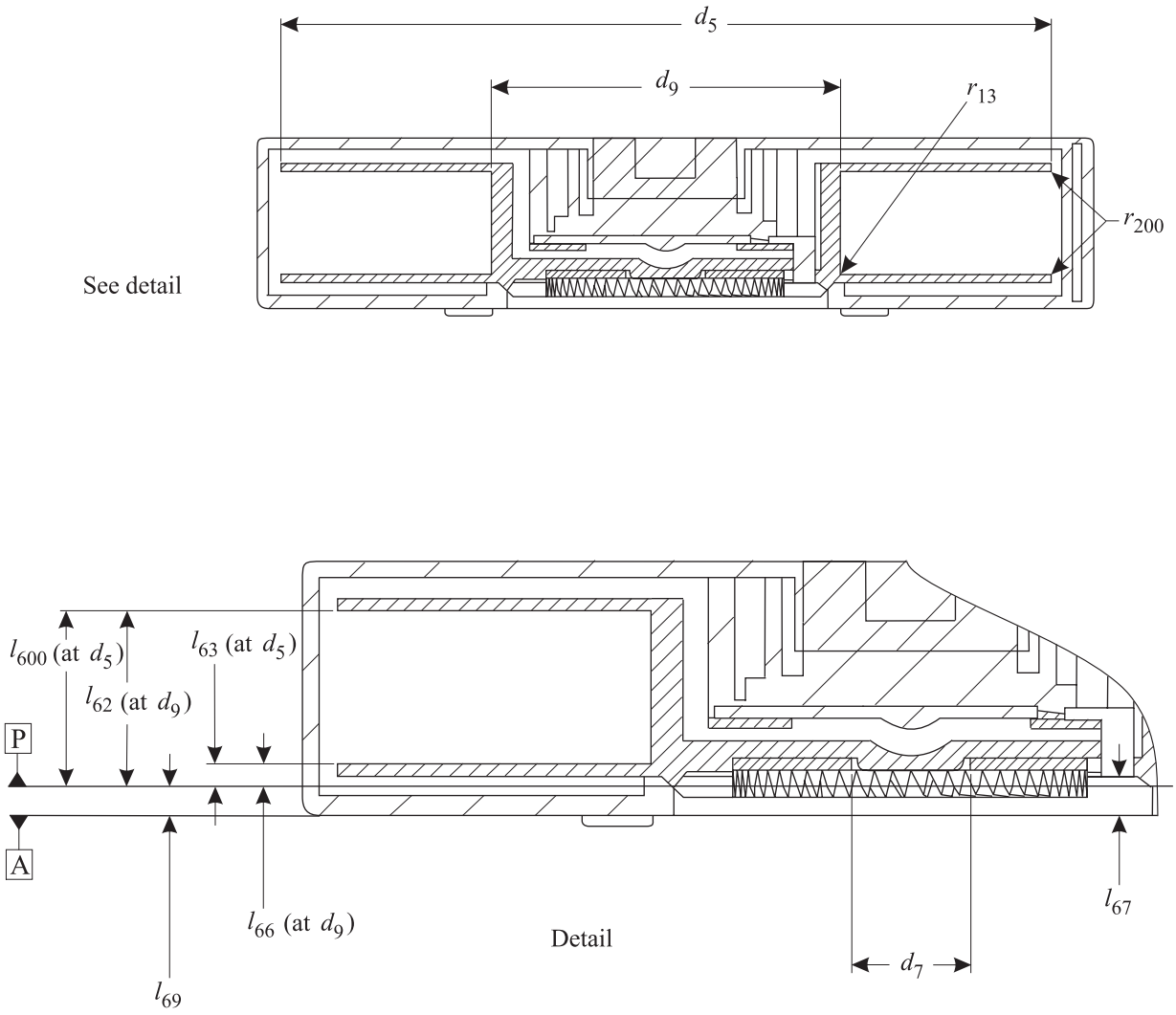

Figure 12 - Cross-section of the hub/brake assembly in the cartridge-in-drive position

Copyright International Organization for Standardization
Reproduced by IHS under license with ISO
No reproduction or networking permitted without license from IHS
Not for Resale
© ISO/IEC 2002 – All rights reserved

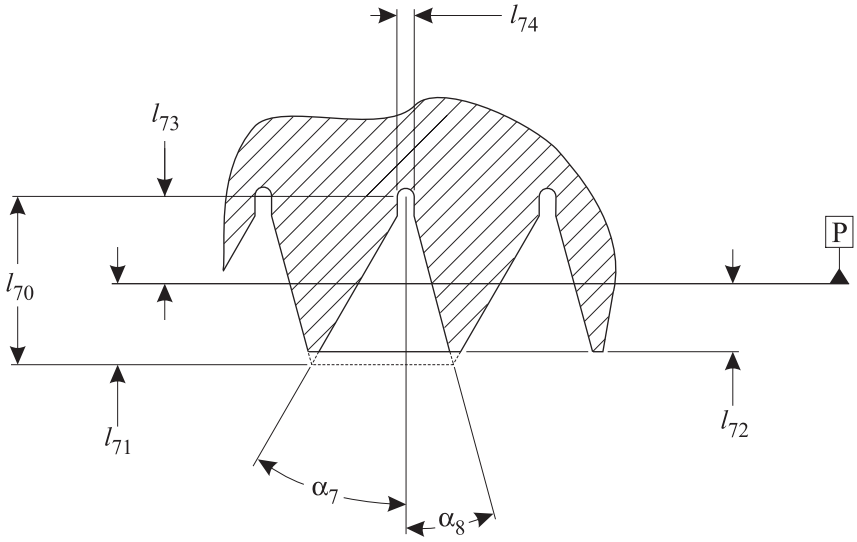

Figure 13 – Cross-section as viewed toward centre of reel through the teeth at diameter 37,50 mm

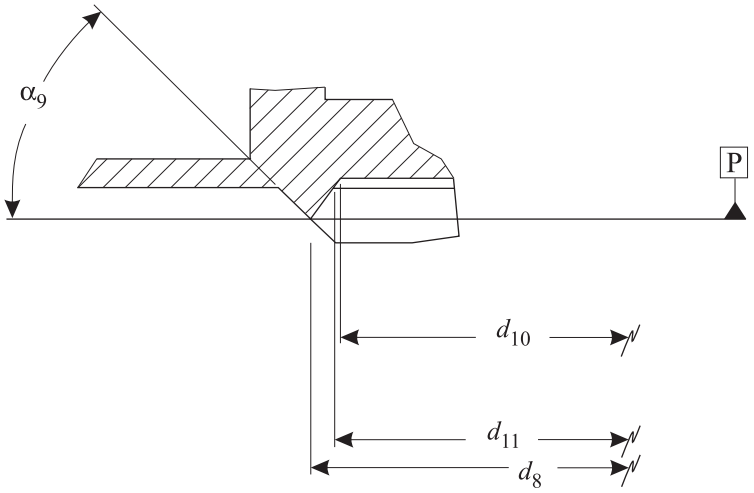

Figure 14 – Cross-section of a tooth part

© ISO/IEC 2002 – All rights reserved
Copyright International Organization for Standardization
Reproduced by IHS under license with ISO
No reproduction or networking permitted without license from IHS
Not for Resale

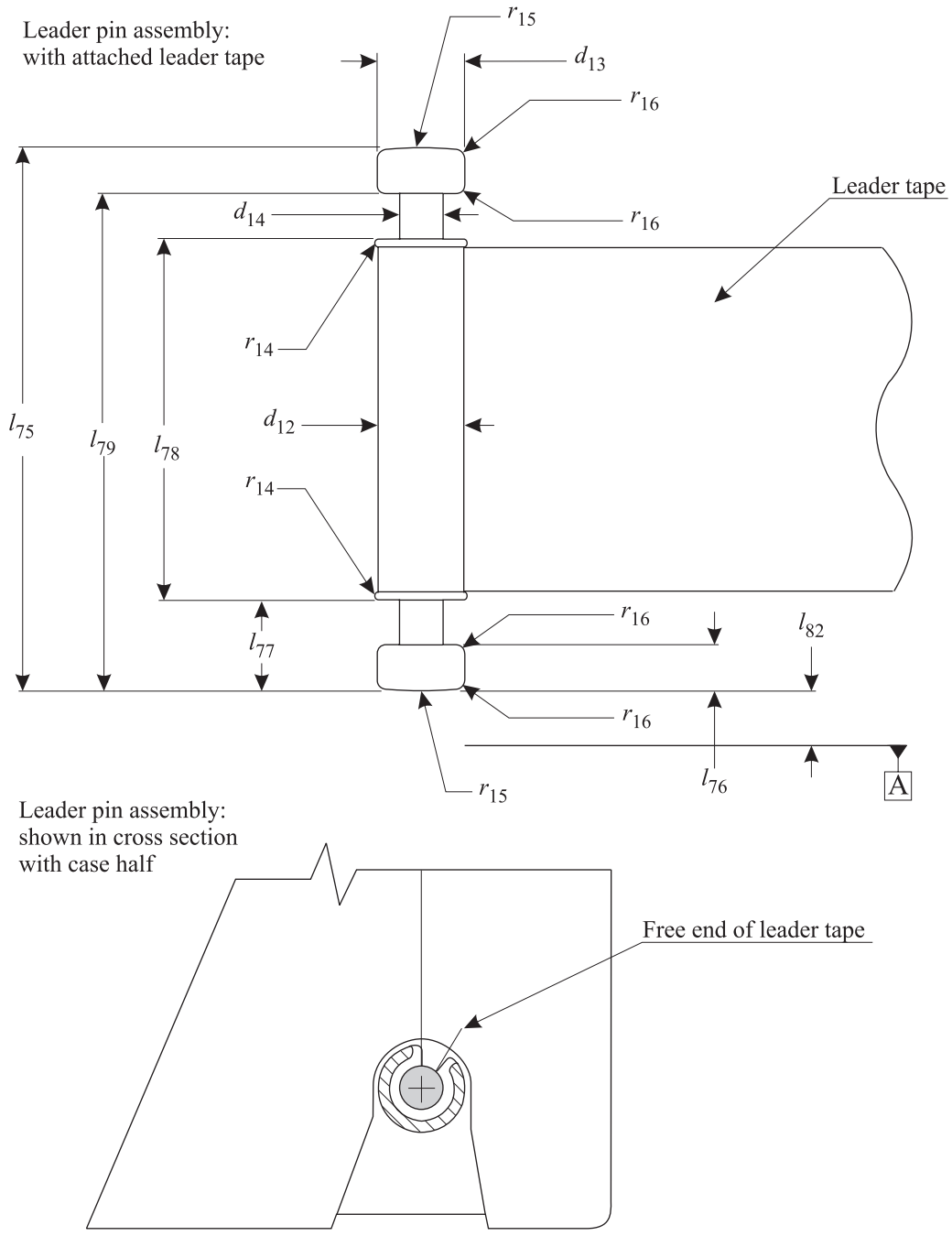

Figure 15 - Leader pin assembly with attached tape seen from the top and from the side

Copyright International Organization for Standardization
Reproduced by IHS under license with ISO
No reproduction or networking permitted without license from IHS
Not for Resale
© ISO/IEC 2002 – All rights reserved

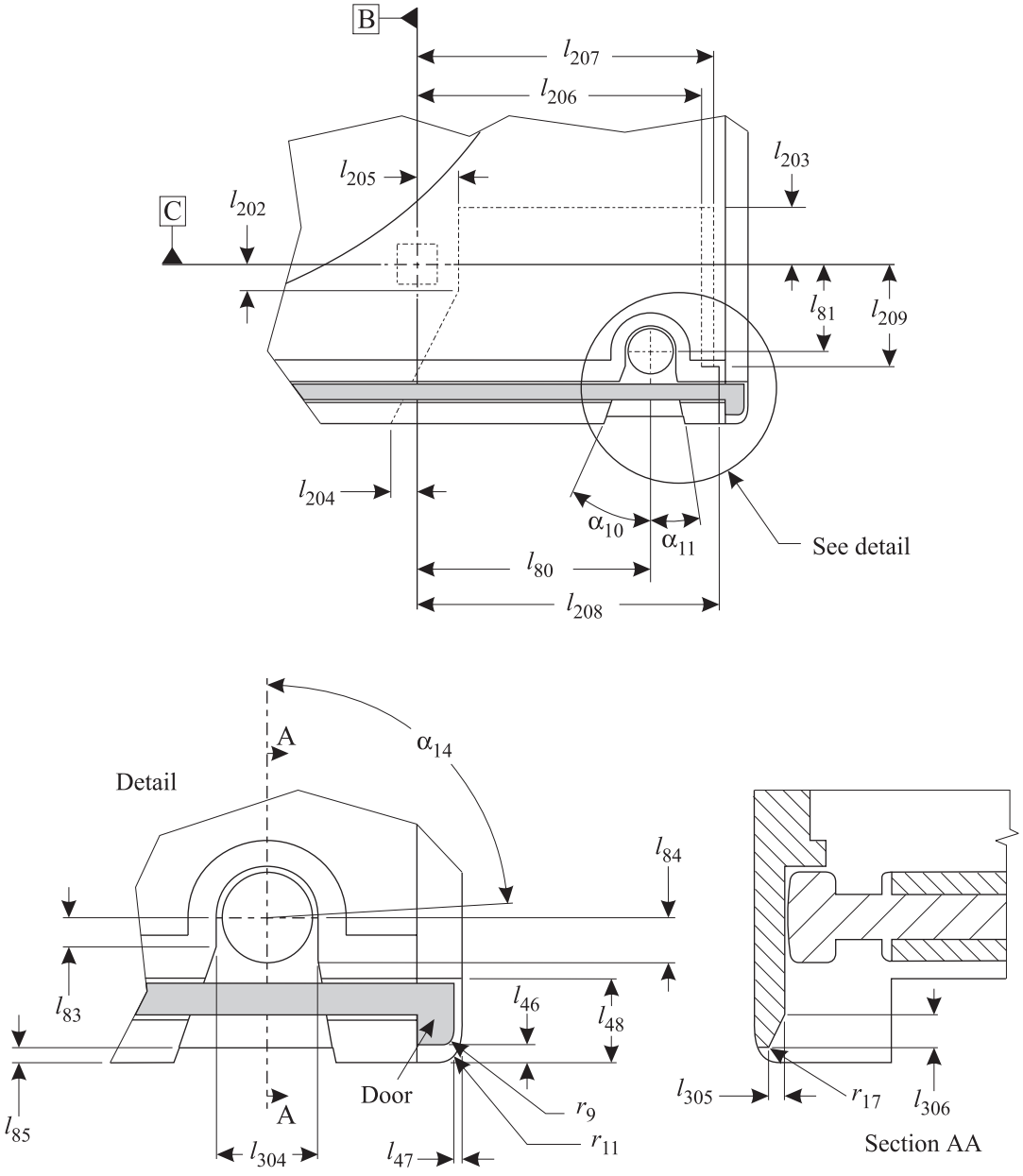

Figure 16 - Leader pin assembly in parked position and detail of the door in closed position

© ISO/IEC 2002 – All rights reserved
Copyright International Organization for Standardization
Reproduced by IHS under license with ISO
No reproduction or networking permitted without license from IHS
Not for Resale

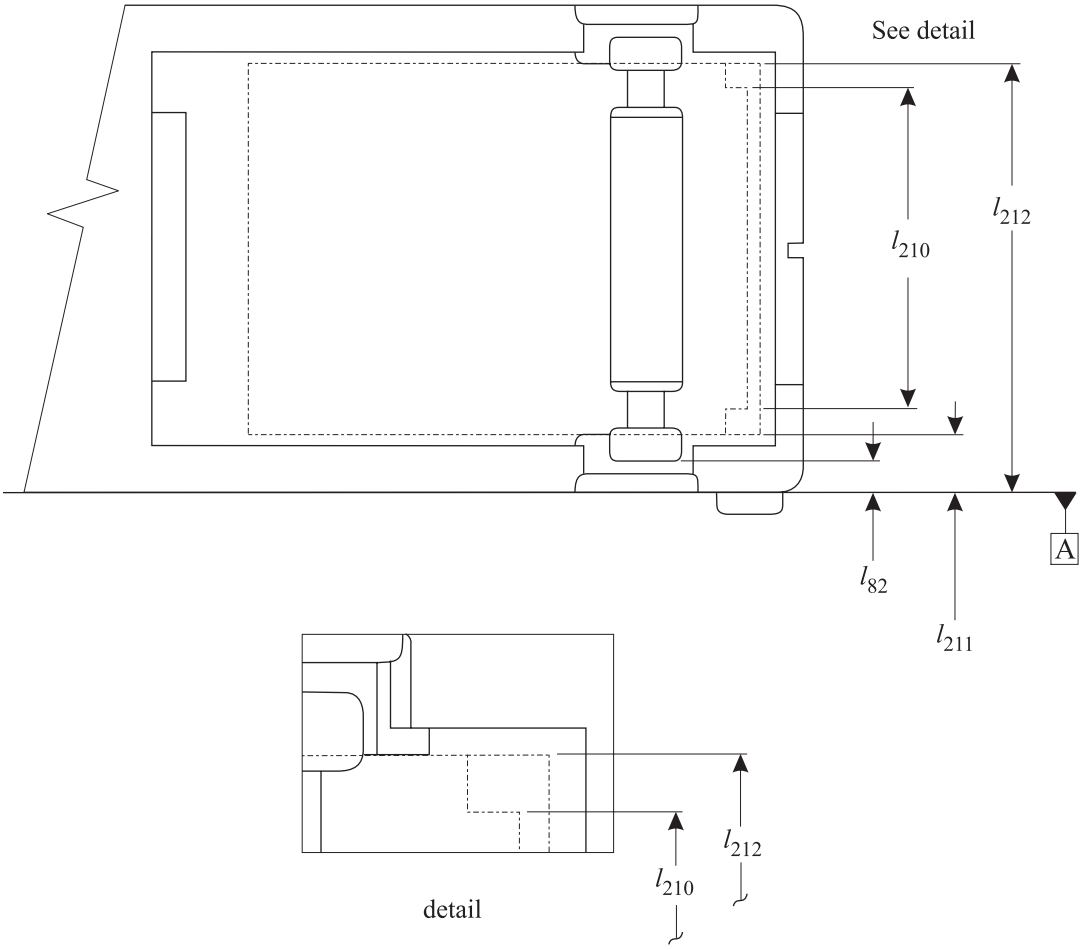

Figure 17 - Leader pin assembly in parked position and door in open position, viewed from the left side

Copyright International Organization for Standardization
Reproduced by IHS under license with ISO
No reproduction or networking permitted without license from IHS
Not for Resale

© ISO/IEC 2002 – All rights reserved

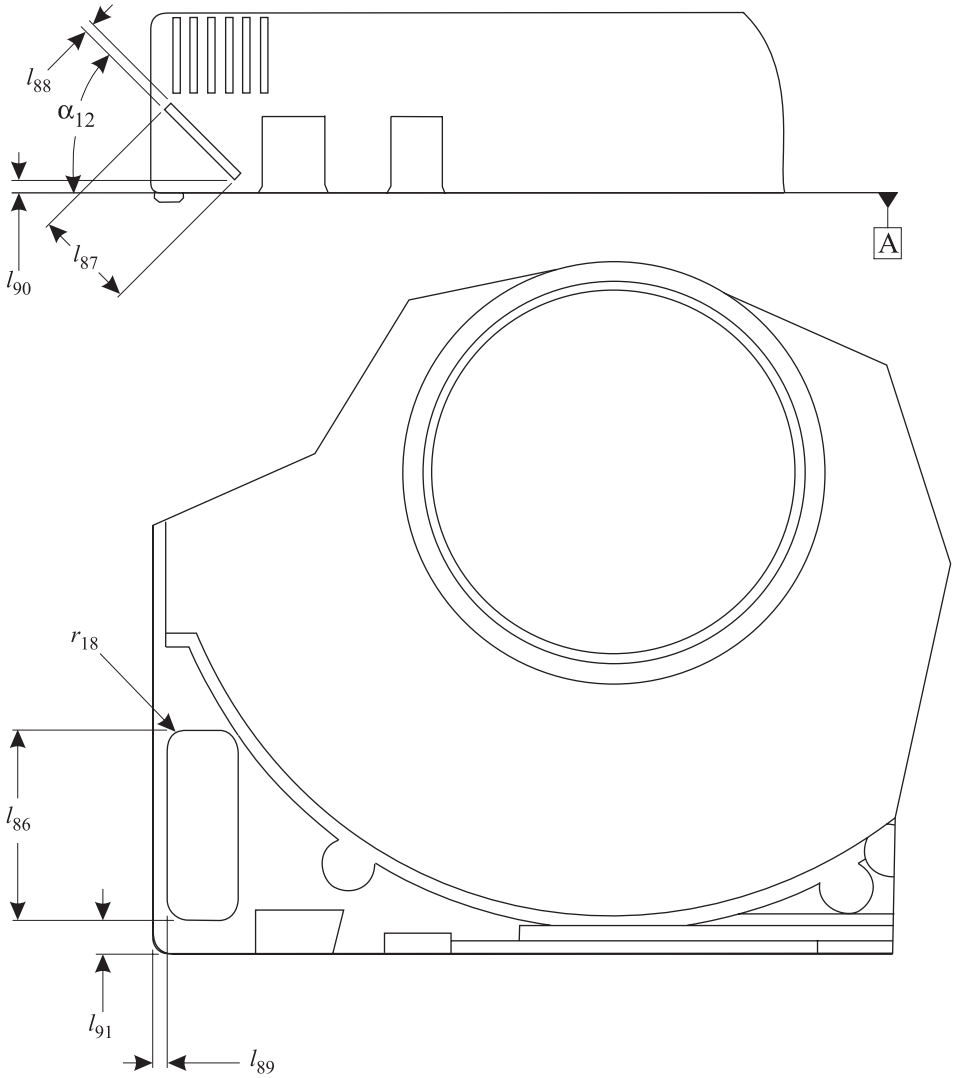

Figure 18 - Location of the LTO CM

© ISO/IEC 2002 – All rights reserved
Copyright International Organization for Standardization
Reproduced by IHS under license with ISO
No reproduction or networking permitted without license from IHS
Not for Resale

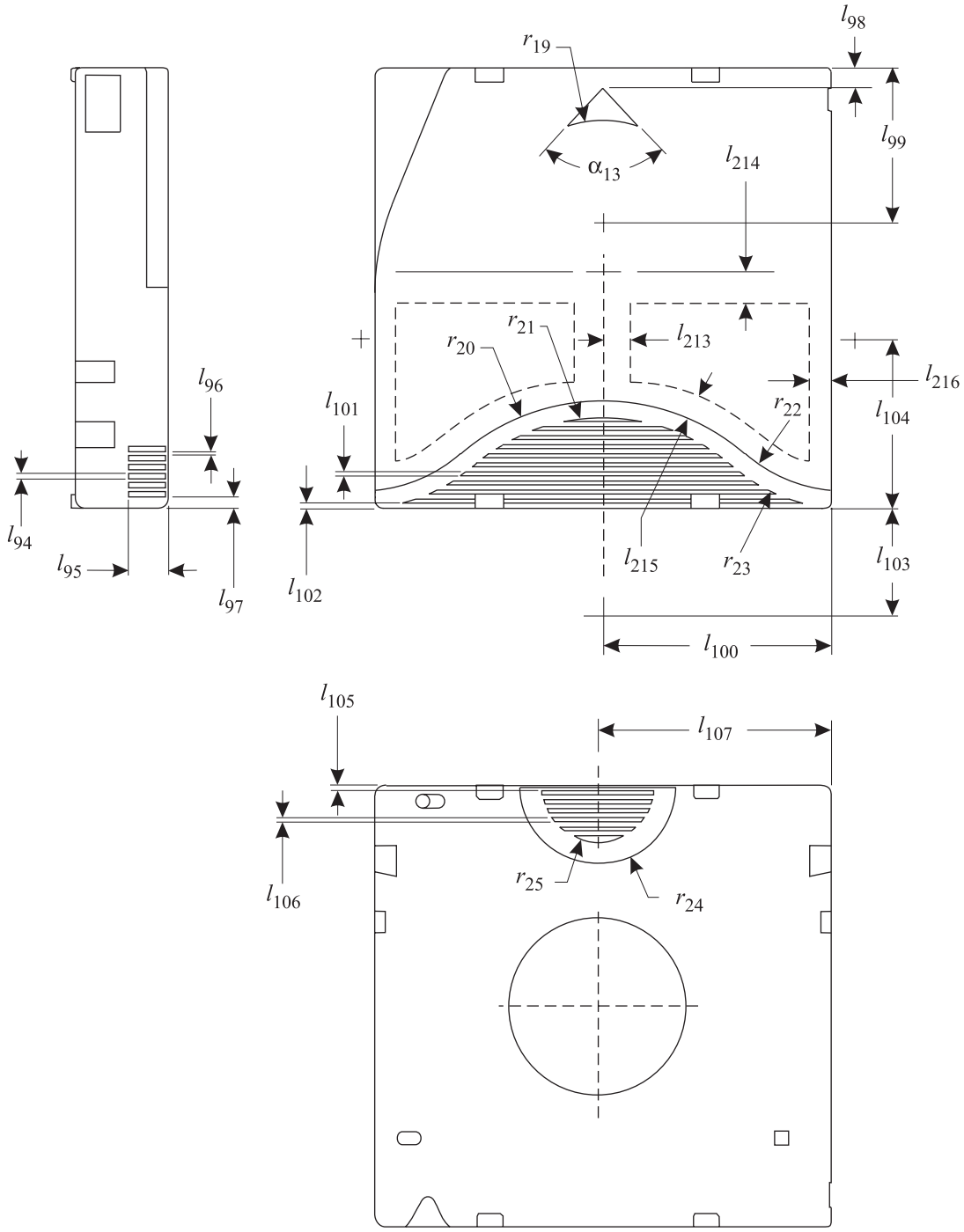

Figure 19 - Handling grips and cartridge insertion indicator

Copyright International Organization for Standardization
Reproduced by IHS under license with ISO
No reproduction or networking permitted without license from IHS
Not for Resale

© ISO/IEC 2002 – All rights reserved

Section 3 - Requirements for the Unrecorded Tape

9 Mechanical, physical and dimensional characteristics of the tape

9.1 Materials

The tape shall consist of a base material (polyethylene 2,6-naphthalate (PEN) or an equivalent) having a glass transition temperature greater than 125 °C. The glass transition temperature shall be defined as the temperature at which the tan(δ) peak maximum is observed (see ASTM D 4092-96 and ASTM D 4065-95). The base material shall be coated on one side with a strong yet flexible layer of ferromagnetic material dispersed in a suitable binder. The back surface of the tape shall be coated with a non-ferromagnetic conductive coating.

The leader tape shall consist of polyethylene terephthalate (or equivalent) base material. The front and back surface may be coated.

The splicing tape shall consist of polyethylene terephthalate (or equivalent), coated on one side with an acrylic (or equivalent) adhesive material. The splicing tape shall be attached to the back surface of the magnetic tape.

9.2 Tape length

9.2.1 Length of magnetic tape

The length of the tape from the splice to the hub shall be

Type A: 609,0 m ± 1,0 m

Type B: 319,0 m ± 1,0 m

Type C: 203,0 m ± 1,0 m

Type D: 87,0 m ± 1,0 m

9.2.2 Length of leader tape

The length of the leader tape shall be 900 mm ± 30 mm.

The leader tape and magnetic tape shall be butted together with no overlap. The leader tape and magnetic tape shall lie flat on the splice tape with no curled or raised corners or edges.

The gap between the end of the magnetic tape and the leader tape shall be less than 0,20 mm.

The offset between the leader tape and the magnetic tape at the splice shall be less than 0,30 mm.

The bottom edge of the leader tape shall be aligned to within 1° to the bottom edge of the magnetic tape.

9.2.3 Length of splicing tape

The length of the splicing tape shall 14,0 mm ± 1,0 mm.

The splicing tape shall extend a distance of not less than 6,0 mm and not more than 8,0 mm over the leader tape. The extent of the splicing tape over the magnetic tape shall not be less than 6,0 mm and not more than 8,0 mm.

9.3 Tape Width

9.3.1 Width of magnetic tape

The tape width shall be measured across the tape from edge to edge. The tape width shall be 12,650 mm ± 0,006 mm. The fluctuation of the tape width shall be no more than 0,006 mm.

9.3.2 Width of leader tape

The width of the leader tape shall be 12,650 mm ± 0,010 mm.

9.3.3 Width of splicing tape

The width of the splicing tape shall be 12,20 mm ± 0,20 mm.

The width of the splicing tape and its position across the width of the leader and magnetic tape shall be such that the bottom edge of the splicing tape shall be no more than 0,40 mm and no less than 0,05 mm from the bottom edges of the other tapes. The top edge of the splicing tape shall be no more than 0,40 mm and no less than 0,05 mm from the top edges of the other tapes.

© ISO/IEC 2002 – All rights reserved

Copyright International Organization for Standardization
Reproduced by IHS under license with ISO
No reproduction or networking permitted without license from IHS
Not for Resale

9.3.4 Procedure

i. Hold the tape flat.

ii. Measure the width with no tension applied to the tape, using a calibrated microscope, profile projector, or equivalent, having an accuracy of 1 μm or better.

iii. Repeat the measurement nine times at points separated by 100 mm.

iv. The tape width is the average of the widths measured.

v. The tape width fluctuation is the difference between the maximum and minimum of the widths measured.

9.4 Tape Thickness

The total thickness of the tape shall be made up of the base film, the magnetic coating and any under layer, and the back coating. The average total thickness of the tape shall be 8,9 μm ± 0,3 μm.

The total thickness of the leader tape shall be 17,0 μm ± 1,0 μm.

The thickness of the splicing tape shall be 24,0 μm max.

The total thickness of the tape at the splice, comprising the leader tape and the splicing tape, shall not exceed 42,0 μm.

9.4.1 Procedure

i. The measurement method shall be to measure multiple layers (ten layers minimum) and determine a mean layer thickness with an accuracy of 0,04 μm or better.

ii. Obtain a minimum of 10 measurements along 2,0 m of tape.

iii. The total tape thickness shall be the average of the thicknesses measured.

9.5 Longitudinal curvature

The radius of curvature of the edge of the tape shall not be less than 33 m.

9.5.1 Procedure

Allow a 1,0 m length of tape to unroll and assume its natural curvature on a smooth flat surface. Measure the deviation from a 1,0 m chord. The deviation shall not exceed 3,8 mm. This deviation corresponds to the minimum radius of curvature of 33 m if measured over an arc of a circle.

9.6 Edge Quality

The tape shall be manufactured such that the edge of the tape is uniform and free from defects.

9.6.1 Edge deviation

The deviation of either tape edge from the calculated edge position over a sample length of 50 mm shall be 3,5 μm max. The measurement shall be made with the sample under a tension of 1,00 N ± 0,05 N and with an accuracy of 0,5 μm, using the following procedure or equivalent.

9.6.1.1 Procedure

i. Place a 450 mm sample under a tension of 1,00 N ± 0,05 N.

ii. Using a calibrated edge position sensor (see figure 20), with an accuracy of 0,5 μm or better, take measurements at 0,25 mm intervals along 250 mm of the tape edge of the sample. The tape shall be held flat at the measurement point.

iii. Using the edge position data for the first length of 50 mm, calculate the length's edge position using linear regression analysis (see figure 21).

iv. Determine the maximum deviation of the edge measurements within that length from the calculated edge position (see figure 21).

v. Move the start position for the calculation of the next 50 mm length by an interval of 0,25 mm.

vi. Repeat steps iii, iv, and v, for successive 50 mm lengths along 250 mm of the tape edge.

vii. The edge deviation is the average of the 801 values from step iv.

--`,,`,,`-`-`,,`,,`,`,,`---

© ISO/IEC 2002 – All rights reserved

Copyright International Organization for Standardization
Reproduced by IHS under license with ISO
No reproduction or networking permitted without license from IHS

Not for Resale

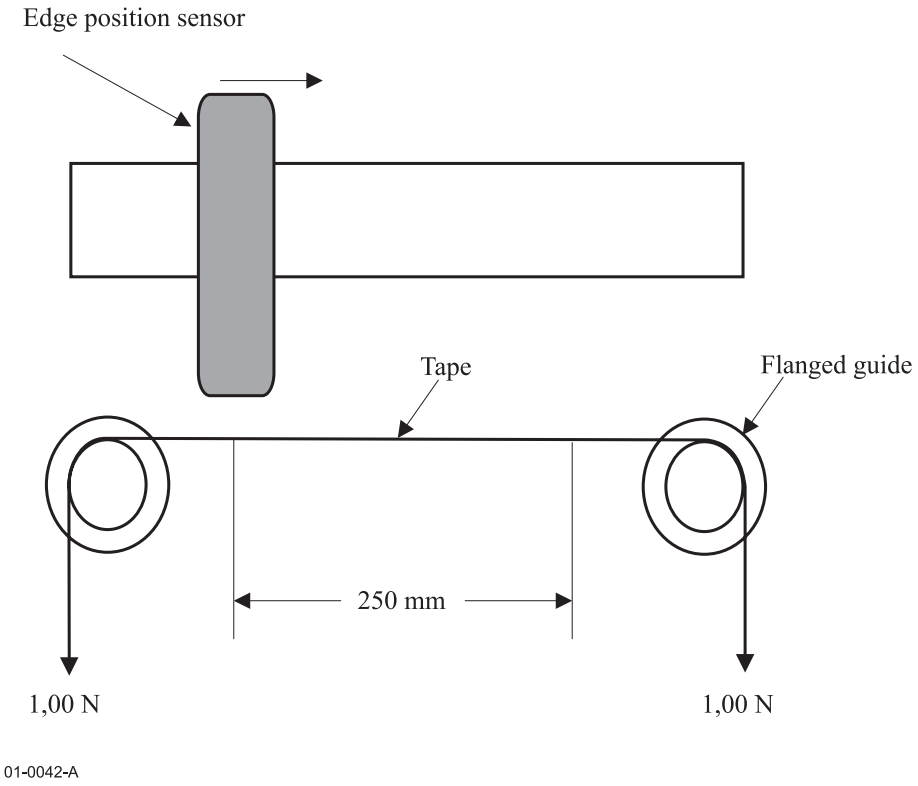

Figure 20 - Measurement of edge deviation

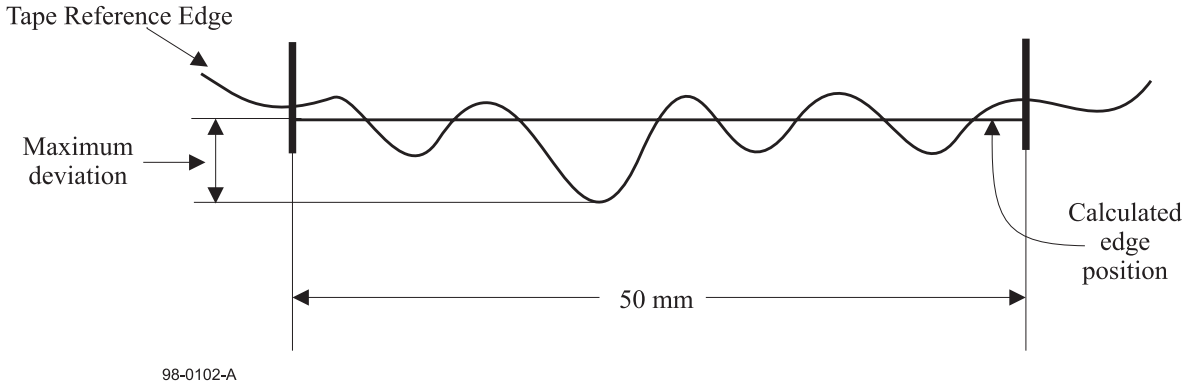

Figure 21 - Edge deviation

9.7 Tape flatness

The tape shall be designed such that an unconstrained length of tape lies flat. The required flatness is specified by cupping, curl and twist as follows.

9.7.1 Cupping

The departure of the surface of the tape, across the width of the tape, from a flat surface shall be 0,0 mm to 1,5 mm negative cupping. Negative cupping is defined such that when a sample of tape is laid on a flat surface with the magnetic side up, the centre of the tape is higher than the edges.

9.7.1.1 Procedure

Cut a 1,0 m ± 0,1 m length of tape. Condition it for a minimum of 24 h in the Test Environment by hanging it so that both surfaces are freely exposed to the Test Environment. From the centre portion of the conditioned tape cut a piece of tape approximately 300 mm in length. Place the test piece on an optically flat surface, with the magnetic surface uppermost. Secure each end of the tape to the surface. The centre 100 mm of the tape shall be used for cupping measurements. Using an optical

© ISO/IEC 2002 – All rights reserved
Copyright International Organization for Standardization
Reproduced by IHS under license with ISO
No reproduction or networking permitted without license from IHS
Not for Resale

comparator, with an accuracy of at least 0,01 mm, measure the maximum deviation of the tape from the surface of the flat. Repeat this measurement at 25 mm intervals for a further four points. The cupping shall be the average of these five measurements.

9.7.2 Curl/Twist

Curl is the curvature of an unconstrained length of tape in the longitudinal direction. Curl can be assessed by measuring the resulting twist in an unconstrained length of hanging tape. The twist shall be 0° ± 180° measured with an accuracy of 15°.

9.7.2.1 Procedure

Cut a 0,50 m ± 0,05 m length of tape. Attach a mass of 200 mg to one end of the tape. Condition it for a minimum of 24 h in the Test Environment by hanging it vertically from one end so that both surfaces are freely exposed to the Test Environment. If there is no curl, the tape will hang straight with no twist. If there is curl, the bottom of the tape will tend to twist with respect to the held end. The twist can be measured in degrees of rotation with respect to the held end.

9.8 Coating adhesion

The initial force required to cause the coating to separate from the tape base material shall not be less than 1,0 N.

9.8.1 Procedure

i. Take a test piece of the tape approximately 380 mm long and scribe a line through the recording coating across the width of the tape 125 mm from one end.

ii. Using a non-acrylic based double-sided pressure sensitive tape, attach the full width of the test piece to a smooth metal plate, with the recording surface facing the plate, as shown in figure 22.

iii. Fold the test piece over 180°, attach the metal plate and the free end of the test piece to the jaws of a universal testing machine and set the speed of the jaw separation to 1 000 mm/min.

iv. Note the force at which any part of the coating first separates from the base material. If this is less than 1,0 N, the tape has failed the test. If the test piece peels away from the double-sided pressure sensitive tape before the force exceeds 1,0 N, an alternative type of non-acrylic based double-sided pressure sensitive tape shall be used.

v. Repeat the procedure for the back coating.

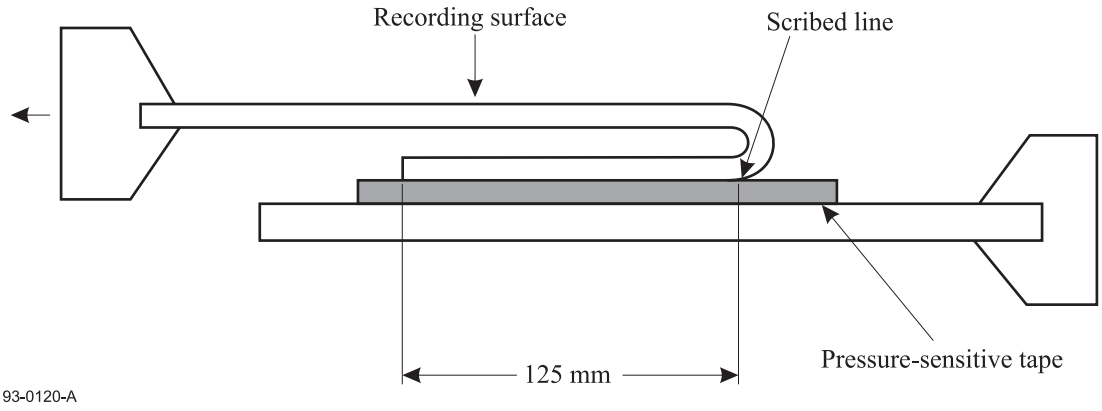

Figure 22 - Measurement of the coating adhesion

9.9 Layer-to-layer adhesion

Layer-to-layer adhesion refers to the tendency of a layer, when held in close proximity to the adjacent layer, to bond itself to an adjacent layer so that free and smooth separation of the layers is difficult.

9.9.1 Requirement

Adjacent layers shall separate easily and there shall be no evidence of delamination or other damage to the coatings.

Copyright International Organization for Standardization
Reproduced by IHS under license with ISO
No reproduction or networking permitted without license from IHS
Not for Resale
© ISO/IEC 2002 – All rights reserved

9.9.2 Procedure

i. Fasten one end of a 1 m length of tape, magnetic coating inwards, with a low cold-flow adhesive material to a horizontally mounted stainless steel cylinder of diameter 12,7 mm.

ii. Attach a mass of 100 g to the opposite end of the tape.

iii. Attach, 25,4 mm above the mass, a narrow strip of double-sided adhesive tape to the magnetic coating.

iv. Slowly rotate the cylinder so that the tape winds uniformly around it into a compact and even roll. The double-sided tape secures the end and prevents unwinding when the mass is removed.

v. The cylinder with the tape shall then be exposed to the following temperature and humidity cycle:

Time	Temperature	RH
16 h to 18 h	54 °C	85 %
4 h	54 °C	10 % or less
1 h to 2 h	21 °C	45 %

vi. Open the end of the roll and remove the double-sided adhesive tape.

vii. Release the free end of the tape.

viii. The outer one or two wraps shall spring loose without adhesion.

ix. Unwind the tape from the cylinder and inspect.

x. The tape shall show no coating delamination, except where the tape directly contacts the cylinder.

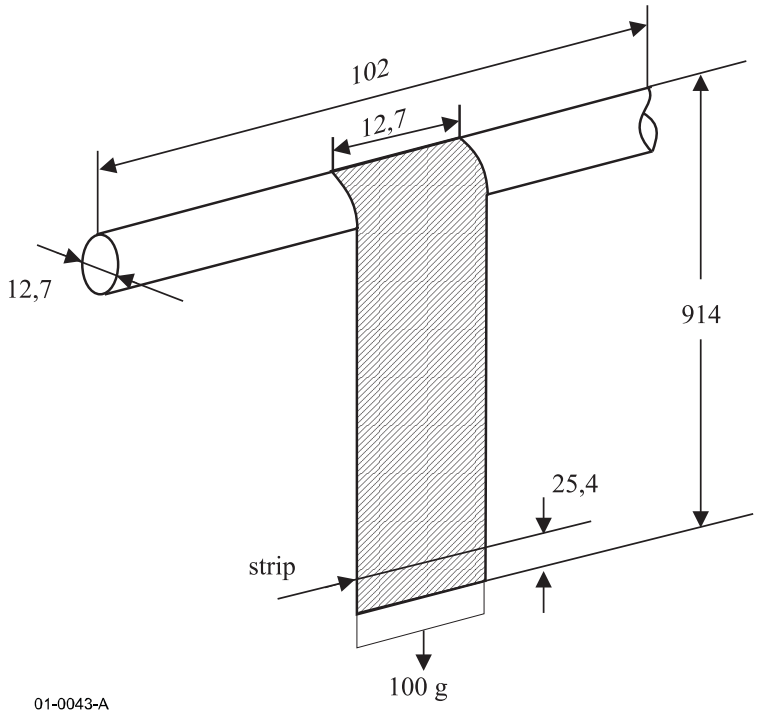

NOTE - All measurements are in mm.

Figure 23 - Measurement of layer-to-layer adhesion

© ISO/IEC 2002 – All rights reserved
Copyright International Organization for Standardization
Reproduced by IHS under license with ISO
No reproduction or networking permitted without license from IHS
Not for Resale

9.10 Coefficient of friction

9.10.1 Requirement

These measurements shall be made at 23 °C ± 2 °C and 45 % RH ± 5 % RH.

Between the magnetic surface and the back surface

- Coefficient of static friction shall be greater than 0,20
- Coefficient of dynamic friction shall be greater than 0,20

Between the magnetic surface and other materials

- Coefficient of static friction shall be between 0,10 and 0,30
- Coefficient of dynamic friction shall be between 0,10 and 0,30

Between the back surface and other materials

- Coefficient of static friction shall be between 0,10 and 0,25
- Coefficient of dynamic friction shall be between 0,10 and 0,25

Test materials shall have a surface finish R_a = 70 nm ± 10 nm.

9.10.2 Procedure for the measurement of the dynamic friction between the magnetic surface and the back surface

i. Wrap a first piece of tape around the Al_2O_3/TiC cylinder of diameter 25,4 mm and wrap it with a total wrap angle of more than 180° with the back surface outwards.

ii. Wrap a second test piece, with the magnetic surface inwards, around the first test piece with a total wrap angle between 170° and 180°.

iii. Exert on one end of the outer test piece a force of F_1 = 0,64 N.

iv. Attach the other end to a force gauge mounted on a linear slide.

v. Measure the force F_2 required to drive the slide at a speed of 0,5 mm/s.

vi. Calculate the coefficient of dynamic friction γ from the equation

$$\gamma = \ln(F_2/F_1)(1/\theta)$$

Where θ is the value of the wrap angle in radians.

9.10.3 Procedure for the measurement of the dynamic friction between the back surface and SS-310 stainless steel

i. Wrap a piece of tape around a SS-310 stainless steel cylinder of diameter 25,4 mm and wrap it with a total wrap angle of between 170° and 180° with the back surface inwards.

ii. Exert on one end of the outer test piece a force of F_1 = 0,64 N.

iii. Attach the other end to a force gauge mounted on a linear slide.

iv. Measure the force F_2 required to drive the slide at a speed of 0,5 mm/s.

v. Calculate the coefficient of dynamic friction γ from the equation

$$\gamma = \ln(F_2/F_1)(1/\theta)$$

Where θ is the value of the wrap angle in radians

9.10.4 Procedure for the measurement of the dynamic friction between the magnetic surface and AlO_2/TiC ceramic

i. Wrap a piece of tape around an Al_2O_3/TiC cylinder of diameter 7,0 mm and wrap it with a total wrap angle of between 170° and 180° with the magnetic surface inwards.

ii. Exert on one end of the outer test piece a force of F_1 = 0,64 N.

iii. Attach the other end to a force gauge mounted on a linear slide.

Copyright International Organization for Standardization
Reproduced by IHS under license with ISO
No reproduction or networking permitted without license from IHS
Not for Resale
© ISO/IEC 2002 – All rights reserved

iv. Measure the force F_2 required to drive the slide at a speed of 0,5 mm/s.

v. Calculate the coefficient of dynamic friction γ from the equation

$$\gamma = \ln(F_2/F_1)(1/\theta)$$

Where θ is the value of the wrap angle in radians.

9.11 Surface quality

The recording surface shall be free from scratches, indentations and creases.

9.11.1 Surface roughness

The surface roughness shall be measured in accordance with ISO 4287.

9.11.1.1 Requirement

– The arithmetic mean surface roughness of the recording surface shall be R_a = 6,0 nm ± 3,0 nm.

– The arithmetic mean surface roughness of the back surface shall be R_a>8,0 nm and R_a<50 nm.

9.11.1.2 Procedure

The measurements of surface roughness shall be made using non-contacting measuring equipment with a long wavelength limit of 0,8 mm max.

9.12 Abrasivity

Tape abrasivity is the tendency of the magnetic coating to wear the magnetic recording heads.

When measured according to annex C, the average wear pattern length in an Alfesil wear bar shall be between 35 μm and 65 μm after 100 passes using new tape. A repeat measurement using the same segment of tape shall provide the same wear pattern length within 30 %.

These measurements shall be made at 23 °C ± 2 °C and 45 % RH ± 5 % RH.

The average wear pattern length in an Alfesil wear bar, for the leader tape material, shall be 81 μm maximum after 100 passes.

9.13 Tensile strength

Measurements shall be made in accordance with ISO 527-3. The length of the test piece shall be 150 mm min. The test piece shall be used with a strain rate of 0,1 per minute.

9.13.1 Breaking strength

Load the test piece until the breaking point is reached. The maximum force required to reach that point is the breaking strength of the tape.

9.13.1.1 Requirement

The breaking strength of the magnetic tape shall be 28 N min.

The breaking strength of the leader tape shall be 28 N min. The elongation of the leader tape at the breaking strength shall be 80 % min.

9.13.2 Offset yield strength

The offset yield strength is the stress at which the strain exceeds by 0,2 % an extension of the initial proportional portion of the stress-strain curve.

9.13.2.1 Requirement

The offset yield strength of the magnetic tape shall be 7 N min.

The offset yield strength of the leader tape/splice/magnetic tape assembly shall be 7 N min.

After application of the 7 N load the leader tape/splice/magnetic tape assembly shall still meet the requirements of 9.2.2.

9.14 Longitudinal compliance

The tensile compliance of the tape in the longitudinal direction when strained in accordance with ISO 527-3 over the range from 0,4 N to 5,0 N shall be less than 0,133 mm/N per 100 mm length of tape. This is equivalent to a modulus of elasticity of the tape in the longitudinal direction of greater than 6,9 GPa.

© ISO/IEC 2002 – All rights reserved
Copyright International Organization for Standardization
Reproduced by IHS under license with ISO
No reproduction or networking permitted without license from IHS
Not for Resale

9.14.1 Procedure

Clamp a 180 mm test piece of tape in a universal testing machine, allowing a 100 mm separation between the machine jaws. Set the jaw separation speed for a strain rate of 0,1 per minute. Plot distance against force. Calculate the modulus of elasticity and the tensile compliance using the slope of the curve between 0,5 N and 1,5 N. The calculation is:

The modulus of elasticity (Young's modulus) is $E = (\delta F/WT) \times (1/(\delta L/L))$

The tensile compliance is $(\delta L/L)/\delta F$

where:

δF	change in force in Newtons
T	measured thickness in millimetres
W	measured width in millimetres
$\delta L/L$	change in sample length between the jaws divided by the original length between the jaws

9.15 Residual elongation

Residual elongation is a measure of the permanent stretch that occurs when a length of tape is held under tension and then released.

9.15.1 Requirement

The residual elongation, expressed as a percentage of the original length, shall be less than 0,03 %.

9.15.2 Procedure

Measure the original length of a test piece of approximately 1,0 m with an applied tensile force of less than 0,1 N. For 10 minutes, apply an additional force of 2 N. Remove the additional force and measure the length of the test piece after an additional 3 minutes.

9.16 Flexural rigidity

Flexural rigidity is a measure of the tape bending stiffness.

9.16.1 Requirement

The flexural rigidity in the longitudinal direction shall be 5 mg/μm to 9 mg/μm.

The flexural rigidity in the transverse direction shall be 4 mg/μm to 8 mg/μm.

9.16.2 Procedure

The flexural rigidity shall be derived from a measurement of the displacement as a function of force applied to a loop of tape. See annex E for the procedure.

9.17 Transverse dimensional stability

The transverse dimensional stability is the percentage change in tape width, when measured under different environmental conditions. The transverse dimensional stability of the tape shall be 0,12 % max. within the specified operating environment for the life of the tape cartridge, and over the tension range of 0,6 N to 1,4 N.

9.18 Electrical resistance of coated surfaces

9.18.1 Requirement

The electrical resistance of the recording surface of the magnetic tape, measured on any square area of the tape shall be within the range:

$5 \times 10^5\ \Omega$ to $5 \times 10^{10}\ \Omega$

The electrical resistance of any square area of the back coating of the magnetic tape shall not exceed $2 \times 10^6\ \Omega$.

The electrical resistance of any square area of the leader tape shall not exceed $1 \times 10^{12}\ \Omega$.

9.18.2 Procedure

Condition a test piece in the Test Environment for 24 h. Position the test piece over two 24-carat gold-plated, semicircular electrodes having a radius 25,4 mm and a finish of at least N4, so that the recording surface is in contact with each electrode (see figure 24). These electrodes shall be placed parallel to the ground and parallel to each other at a distance 12,65 mm between their centres. Apply a force of 1,62 N to each end of the test piece. Apply a d.c. voltage of 100 V ± 10 V across the

Copyright International Organization for Standardization
Reproduced by IHS under license with ISO
No reproduction or networking permitted without license from IHS
Not for Resale
© ISO/IEC 2002 – All rights reserved

electrodes and measure the resulting current flowing (wait for the current to stabilise). From this value, determine the electrical resistance.

Repeat for a total of 5 positions along the test piece and average the 5 resistance readings. Repeat the procedure with the back surface in contact with the electrodes.

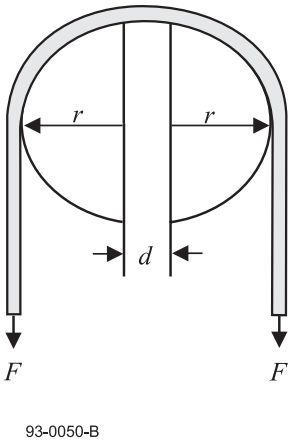

Figure 24 - Measurement of electrical resistance

When mounting the test piece, make sure that no conducting paths exist between the electrodes except that through the coating under test.

NOTE - Particular attention should be given to keeping the surfaces clean.

10 Magnetic Recording Characteristics

10.1 General

The magnetic tape shall have a magnetic coating of metal particles.

10.2 Test conditions

When performing the tests, the output or resultant signal shall be measured on the same relative pass for both a tape calibrated to the Master Standard Reference Tape and the tape under test on the same equipment.

The following conditions shall apply to the testing of all magnetic recording characteristics, unless otherwise noted.

Tape condition: servo written tape as received

Tape speed:	3,0 m/s
Read track width:	12 μm ± 2 μm
Gap alignment:	within 7' between the mean write transitions and the read gap
Write gap length:	0,9 μm ± 0,3 μm
Write track width:	27 μm ± 2 μm
Shield-to-shield spacing:	< 0,4 μm
Write equalisation:	Apply write equalisation as defined in 14.2
Tape tension:	1,0 N ± 0,1 N
Recording current:	Set per head to the Optimum Recording Current
Recording density:	TRD1
Bandwidth of read amplifier:	> 15 MHz

© ISO/IEC 2002 – All rights reserved
Copyright International Organization for Standardization
Reproduced by IHS under license with ISO
No reproduction or networking permitted without license from IHS
Not for Resale

10.3 Optimum Recording Current

The Optimum Recording Current shall be between 80 % and 120 % of the Reference Recording Current.

Traceability to the Reference Recording Current is provided by the calibration factors supplied with each Secondary Standard Reference Tape.

10.4 Signal amplitude

The Average Signal Amplitude shall be between 80 % and 120 % of the Standard Reference Amplitude. The average shall be calculated over a minimum of 25,4 mm of track at the density TRD1, and shall exclude missing pulses.

Traceability to the Standard Reference Amplitude is provided by the calibration factors supplied with each Secondary Standard Reference Tape.

10.5 Resolution

The ratio of the Average Signal Amplitude at the density TRD1, to that at the density TRD3 shall be between 85 % and 115 % of that for the Master Standard Reference Tape.

Traceability to the resolution of the Master Standard Reference Tape is provided by the calibration factors supplied with each Secondary Standard Reference Tape.

10.6 Overwrite

Overwrite is the ratio of the residual low frequency signal (density TRD3) after being overwritten by density TRD1 to the original signal amplitude of TRD3.

10.6.1 Requirement

The overwrite value for the tape under test shall be less than +2,5 dB relative to the overwrite value for the Master Standard Reference Tape.

Traceability to the overwrite of the Master Standard Reference Tape is provided by the calibration factors supplied with each Secondary Standard Reference Tape.

10.7 Ease of erasure

When the tape has been subjected to a longitudinal a.c. erasing field of 382 000 A/m, any remaining servo signal amplitude shall not exceed 2 % of the Servo Amplitude before erasure.

NOTE - An a.c. erase field will erase the servo tracks rendering the tape unusable.

10.8 Broad Band Signal-to-Noise Ratio

The Broad Band Signal-to-Noise Ratio (BBSNR) is the ratio of average signal power to average integrated broad noise power of a tape written at density TRD2 and is expressed in dB.

10.8.1 Requirement

The BBSNR for the tape under test <$BBSNR_{tape}$> shall be greater than -2 dB relative to the BBSNR for the Master Standard Reference Tape <BBSNR> when measured according to the procedure describe in annex B. In addition the modulation (or skirt) noise <SNRsk> for the tape under test $SNRsk_{tape}$ shall be greater than -2 dB relative to the SNRsk for the Master Standard Reference Tape <$SNRsk_{MSRT}$>.

Traceability to the <$BBSNR_{MSRT}$>and <$SNRsk_{MSRT}$> is provided by the calibration factor supplied with each Secondary Standard Reference Tape.

10.9 Tape quality

10.9.1 Missing pulses

A missing pulse is a loss of read signal amplitude. A missing pulse exists when the base-to-peak read signal amplitude is less than 35 % of half the Average Signal Amplitude, written at density TRD1 for the preceding 25,4 mm of tape.

10.9.1.1 Definitions

A short defect is 1, 2 or 3 consecutive missing pulses.

A long defect is 4 or more consecutive missing pulses or when more than one short defect occurs within any span of 500 bytes.

Copyright International Organization for Standardization
Reproduced by IHS under license with ISO
No reproduction or networking permitted without license from IHS
Not for Resale
© ISO/IEC 2002 – All rights reserved

10.9.1.2 Requirements

The average short defect rate per track shall be less than 20 per metre.

The average long defect rate per track shall be less than 1,5 per metre.

The average long defect length shall be less than 3 660 RLL encoded ONEs.

10.9.2 Missing pulse zone

The start of a missing pulse zone is a missing pulse. The end of a missing pulse zone occurs when 6 000 consecutive pulses occur without a missing pulse.

10.9.2.1 Requirement

No missing pulse zones longer than 20 mm are allowed.

Section 4 - Requirements for an Interchanged Tape

11 Method of recording servo bands

11.1 General

There shall be five servo bands pre-recorded on the tape. Multiple servo locations are defined within each servo band. The servo locations shall be used for track following while the cartridge is being operated in the cartridge drive. The servo bands shall be written prior to the cartridge being usable for data storage and retrieval. All servo locations shall be located at specific distances from the Tape Reference Edge.

The Tape Reference Edge is the bottom edge when viewing the recording side of the tape with the hub of the tape cartridge to the observer's right.

Each servo band shall contain servo frames consisting of 18 servo stripes. Servo frames are encoded as LPOS words to provide longitudinal position down the length of the tape. Longitudinal shifts of servo frames among the servo bands uniquely identify the servo bands. The details of the servo bands are shown in figures 25, 26, and 28.

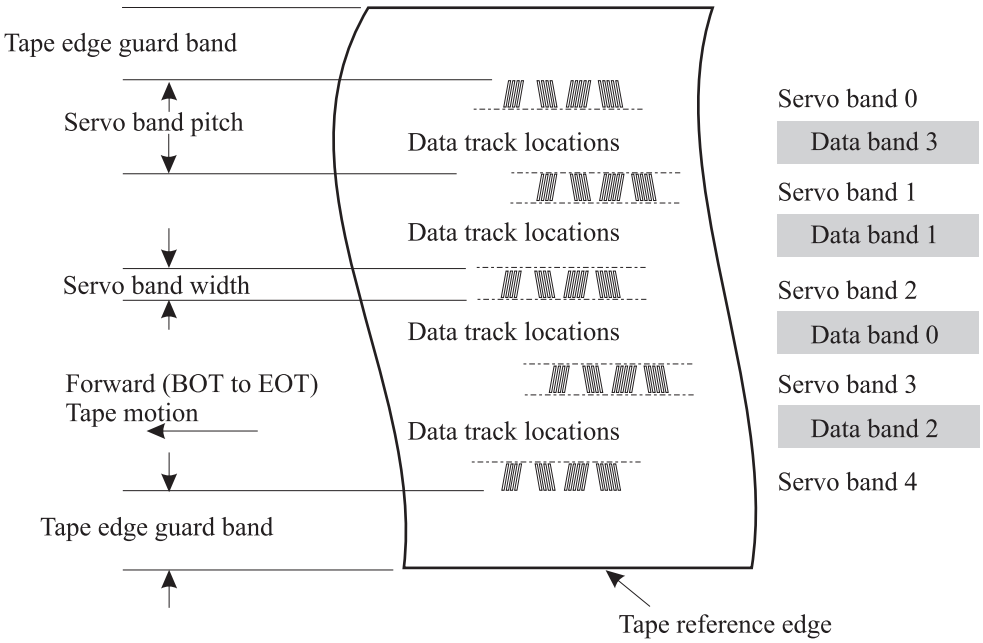

Figure 25 – Servo band locations

11.2 Servo bands

The five servo bands shall be numbered 0 to 4. Data tracks shall be recorded between pairs of servo bands, see figure 25. Servo bands comprise recorded servo stripes.

© ISO/IEC 2002 – All rights reserved
Copyright International Organization for Standardization
Reproduced by IHS under license with ISO
No reproduction or networking permitted without license from IHS
Not for Resale

11.2.1 Servo stripes

A servo stripe shall consist of two magnetic transitions, which shall be spaced 2,1 μm ± 0,4 μm apart.

The width of each servo stripe measured perpendicular to the Tape Reference Edge shall be

$$186\ \mu m\ ^{+\ 6\ \mu m}_{-\ 0\ \mu m}$$

11.2.2 Servo bursts

Servo bursts are groups of servo stripes. There are four types of servo burst: A burst, B burst, C burst and D burst. There shall be 5 stripes each in A and B bursts. There shall be 4 stripes each in C and D bursts. When averaged over the length of one LPOS word, the first transition of the servo stripes within the same servo burst shall be spaced 5,00 μm ± 0,05 μm apart except as noted in servo frame encoding, 11.3.

11.2.3 Servo frames

A servo frame shall comprise an A burst, a B burst, a C burst and a D burst. A servo subframe 1 shall comprise an A burst and a B burst. A servo subframe 2 shall comprise a C burst and a D burst. Tolerances on servo frame dimensions are to support interchange and as such include the effects of servo writing and tape dimensional stability. See figure 26.

Corresponding stripes are the like-number stripes in a burst and the succeeding burst, e.g., the first stripe in a burst corresponds to the first stripe in the succeeding burst, the second stripe in a burst corresponds to the second stripe in the succeeding burst, etc. through a total of four/five stripes.

The relative position of corresponding stripes shall be measured from the first (of two) transition of a stripe to the first (of two) transition of its corresponding stripe.

The servo band centreline is defined as that point where the average distance over the length of one LPOS word, of the five A to B stripe pairs plus the four C to D stripe pairs is 50,00 μm.

– The five stripe aggregate average distance over the length of one LPOS word between the five corresponding stripes of the A and B bursts shall be 50,00 μm ± 0,05 μm.

– The four stripe aggregate average distance over the length of one LPOS word between the four corresponding stripes of the C and D bursts shall be 50,00 μm ± 0,05 μm.

– The four stripe aggregate long-term average distance over the length of 1 m, between the 4 corresponding stripes of the A and C bursts and the 4 corresponding stripes of the C and A bursts, shall be 100,00 μm ± 0,15 μm. The four stripe aggregate short-term average distance over any 4 adjacent subframes between corresponding stripes of the A and C and the C and A bursts shall be within 0,20 % of the long-term average distance.

– The four stripe aggregate average distance over the length of one LPOS word between the four corresponding stripes of the C and A bursts shall be 100,00 μm ± 0,25 μm.

When viewing the tape recording surface the azimuth angle of a feature on the tape is the angle between a line drawn perpendicular to the Tape Reference Edge and the feature of interest. With the Tape Reference Edge at the bottom, positive azimuth angle is rotation in a clockwise direction from the line perpendicular to the Tape Reference Edge.

– The five stripes of the A burst shall be written at azimuth $\alpha_{15} = 6° \pm 5'$ when averaged over the length of one LPOS word.

The relative angle between A and B stripes and the linearity of the stripes are controlled by requirements on the difference between A-B burst separations at various locations across the servo band. Similar requirements are applied to C and D bursts. The cross tape positions for the separation measurements are taken in pairs symmetrically located about the servo band centreline. The average A-B burst separation shall be taken over the length of one LPOS word. The average C-D burst separation shall be taken over the length of one LPOS word. The requirements for the differences of burst separations are listed in table 1.

Copyright International Organization for Standardization
Reproduced by IHS under license with ISO
No reproduction or networking permitted without license from IHS
Not for Resale
© ISO/IEC 2002 – All rights reserved

Table 1 - Burst Separation

Position above and below Servo band centreline	Difference in average A-B or C-D burst separations
90,00 μm	37,90 μm ± 0,10 μm
68,75 μm	28,95 μm ± 0,10 μm
41,25 μm	17,37 μm ± 0,10 μm
13,75 μm	5,79 μm ± 0,10 μm

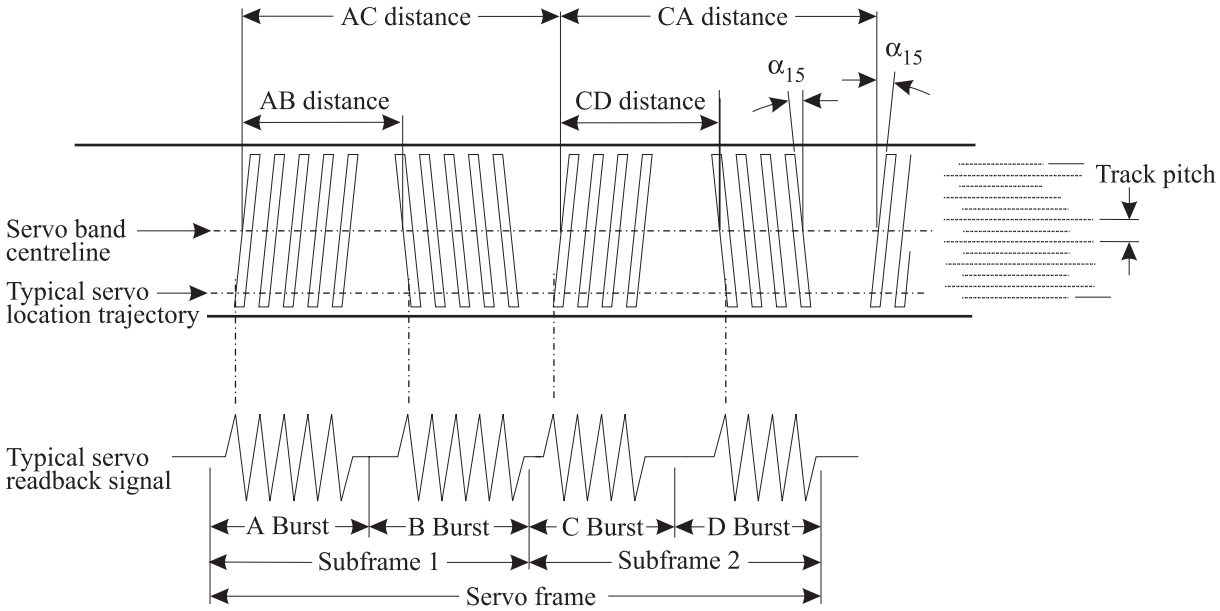

Figure 26 – Servo frames

11.2.4 Servo signal amplitude

The average base-to-peak servo signal amplitude of an interchange cartridge, measured for all servo bands at each nominal servo location, averaged over 1 000 servo stripes, shall be between 70 % and 150 % of the amplitude value measured for a Master Standard Reference Tape at the centre of Servo Band 1. Traceability to the servo signal amplitude of the Master Standard Reference Tape is provided by the calibration factors supplied with each Secondary Standard Reference Tape.

The amplitude of the A and C stripes averaged over a total of at least 500 stripes shall be within 20 % of the amplitude of the B and D bursts averaged over a total of at least 500 stripes. The measurements of the average amplitude for all stripes shall be made over the same set of servo frames.

11.2.5 Servo signal polarity

The first transition of each servo stripe with the tape moving from BOT to EOT shall be a source of magnetic field where the divergence of the magnetisation is negative, the second transition is therefore, a sink for magnetic field where the divergence of the magnetisation is positive. See figure 27.

© ISO/IEC 2002 – All rights reserved
Copyright International Organization for Standardization
Reproduced by IHS under license with ISO
No reproduction or networking permitted without license from IHS
Not for Resale

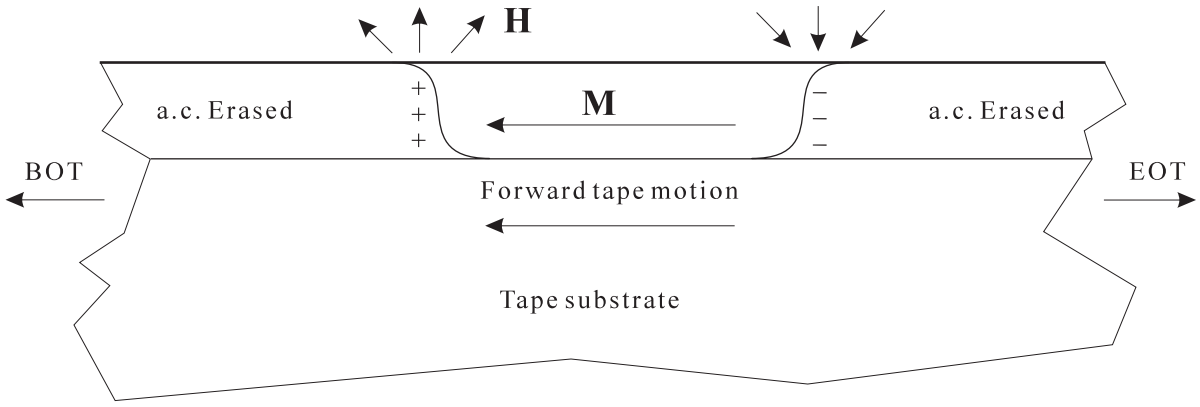

Figure 27 - Servo signal polarity

11.2.6 Servo defects

A servo frame defect has been encountered if any of the 18 stripe peaks contained in a servo frame fall below 25 % of the average peak-to-peak signal. The average servo amplitude is the average peak-to-peak amplitude measured over 1 000 servo stripes. Coincident servo frame defects exist when servo defects are encountered in adjacent servo bands at the same LPOS frame.

A servo fade defect exists when the peak-to-peak amplitude falls below 25 % of the average servo stripe amplitude for more than 11 consecutive servo frames (equivalent to 2,2 mm of tape).

11.3 Servo frame encoding

Information shall be encoded into the servo frames to indicate absolute position along the length of the tape, to include manufacturer's data, and to enable identification of servo bands.

11.3.1 Method of encoding position and manufacturer's data

Information shall be encoded into servo frames by shifting the relative positioning of the stripes in servo subframe 1, see figure 28. Each servo frame shall encode one bit, which is either a ONE or ZERO.

Copyright International Organization for Standardization
Reproduced by IHS under license with ISO
No reproduction or networking permitted without license from IHS
Not for Resale
© ISO/IEC 2002 – All rights reserved

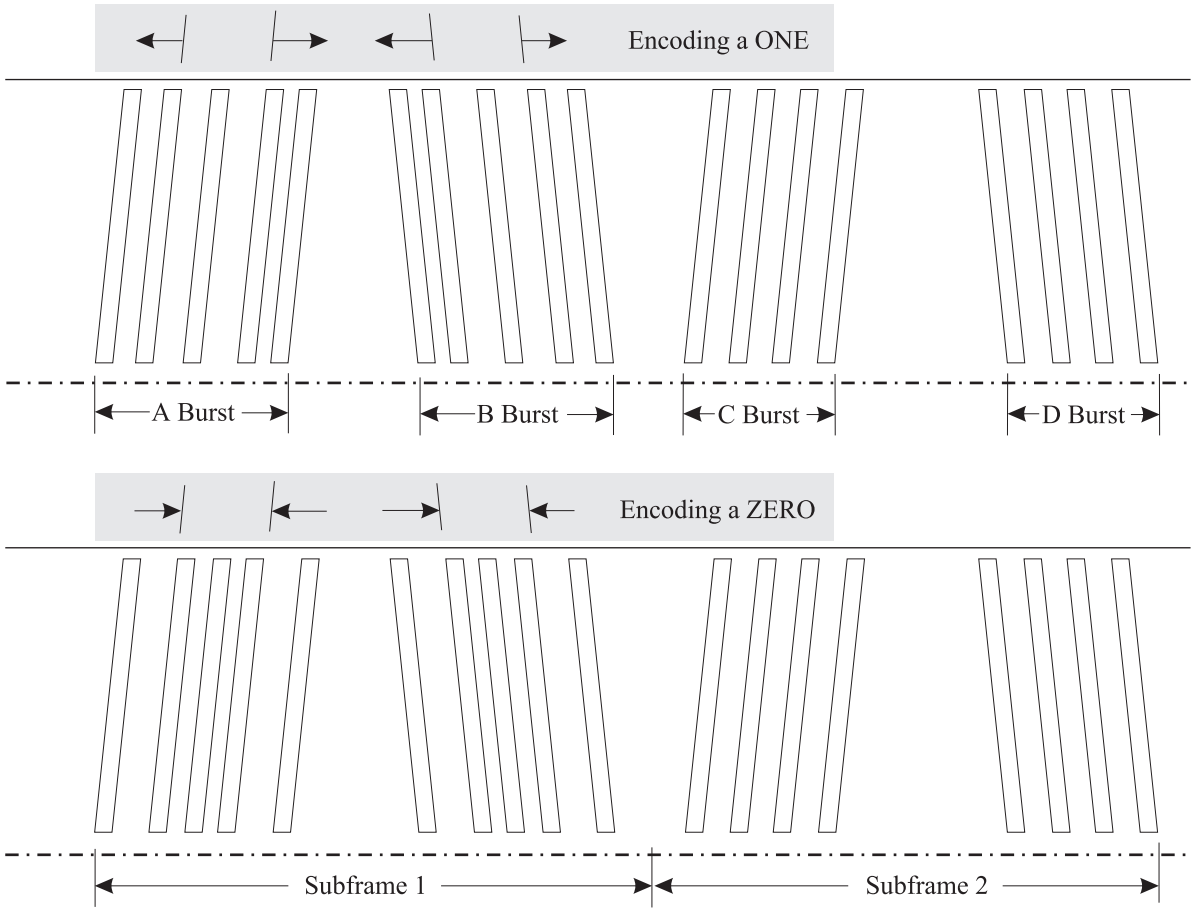

Figure 28 – Servo frame encoding

A ONE shall be encoded in the A burst by shifting the second stripe of the A burst toward the first stripe by 0,25 µm and shifting the fourth stripe of the A burst by 0,25 µm toward the fifth stripe. In order to maintain the correct timing between corresponding stripes of A and B bursts, the same shifts shall be applied to the second and fourth stripes of the B burst.

A ZERO shall be encoded in the A burst by shifting the second stripe of the A burst away from the first stripe by 0,25 µm and shifting the fourth stripe of the A burst by 0,25 µm away from the fifth stripe. In order to maintain the correct timing between corresponding stripes of A and B bursts, the same shifts shall be applied to the second and fourth stripes of the B burst.

The distances between stripes in the A and B bursts for encoding ONEs and ZEROs and the nominal distances for null data (as is used in C and D bursts) shall be as given in the table below.

Table 2 - Stripe Separation

Bit encoded in bursts	Distance between stripes 1 and 2 µm	Distance between stripes 2 and 3 µm	Distance between stripes 3 and 4 µm	Distance between stripes 4 and 5 µm
C & D	5,00	5,00	5,00	n/a
A & B (ONE)	4,75	5,25	5,25	4,75
A & B (ZERO)	5,25	4,75	4,75	5,25

In addition to the position information down the track, the LPOS word shall also include tape manufacturing information.

© ISO/IEC 2002 – All rights reserved
Copyright International Organization for Standardization
Reproduced by IHS under license with ISO
No reproduction or networking permitted without license from IHS
Not for Resale

11.3.2 LPOS word construction

The absolute location down the length of the tape and manufacturers' data shall be recorded within LPOS words. Each LPOS word shall comprise 36 servo frames (7,2 mm). LPOS words shall be recorded continuously along the length of the tape. The layout of the LPOS words is shown below. The LPOS value shall be determined by the six LPOS symbols of the LPOS word from the base 14 alphabet shown in figure 29 and table 3. The LPOS value shall take the value:

$$\text{LPOS value} = L0 + L1 \times 14 + L2 \times 14^2 + L3 \times 14^3 + L4 \times 14^4 + L5 \times 14^5$$

As the tape is removed from the cartridge, i.e. the forward direction, the LPOS value shall increment. The LPOS values fall in a range from 0 to 7 529 535. The LPOS value shall increment by one every 36 servo frames and shall represent a distance of 7,2 mm. The next value after 7 529 535 shall be 0. However, the rollover to 0 shall not occur within any single cartridge. The physical location given by the LPOS value shall be considered to be the point following the last servo frame of the LPOS word containing that value, on the centreline of servo band 2, when moving from BOT to EOT.

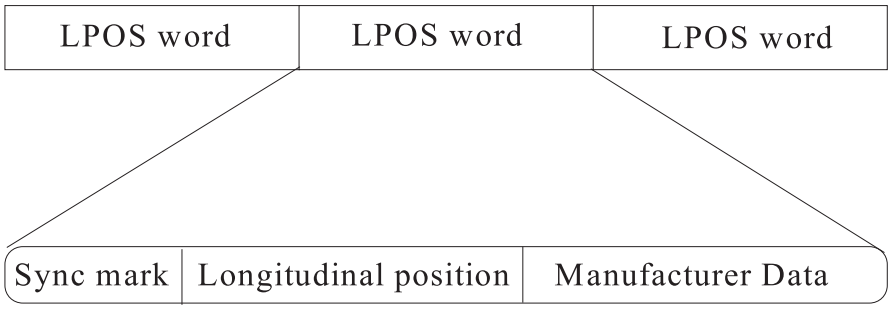

Figure 29 LPOS word layout

In the forward direction, the LPOS word shall consist of seven symbols and a sync mark as shown below.

LPOS Word: Sy,L0,L1,L2,L3,L4,L5,Tx

Where:

Sy is the word sync mark

L0 is the least significant symbol in longitudinal position

L1 is the next most significant symbol in longitudinal position

L2 is the next most significant symbol in longitudinal position

L3 is the next most significant symbol in longitudinal position

L4 is the next most significant symbol in longitudinal position

L5 is the next most significant symbol in longitudinal position

Tx is one symbol of tape manufacturer information

The LPOS word symbols shall be constructed from the bit sequences shown in table 3. The most significant bit within each symbol shall be encoded into a servo subframe first.

The LPOS word shall contain 36 bits and shall have a length of 36 servo frames.

Copyright International Organization for Standardization
Reproduced by IHS under license with ISO
No reproduction or networking permitted without license from IHS
Not for Resale
© ISO/IEC 2002 – All rights reserved

Table 3 - LPOS word symbols

Symbol	Bit sequence
Sy	10000000
D	0001
C	0010
B	0011
A	0100
9	0101
8	0110
7	0111
6	1001
5	1010
4	1011
3	1100
2	1101
1	1110
0	1111

11.3.3 Tape manufacturer encoding

The sequence of symbols Tx forms a Manufacturer's Word down the tape. The Manufacturer's Word shall have a length of 97 Tx symbols including the initial synchronisation character. The Manufacturer's Word shall be structured as:

Manufacturer's Word: D,A0,A1,A0,A1,…

Manufacturer information shall be encoded into the LPOS words using table 4. Any value to be recorded in LPOS in table 4 shall be encoded as two symbols from table 3 by recording in the LPOS word the Symbol Pair corresponding to the value to be recorded in LPOS. The bit sequence of "D" from table 3 shall be reserved as the synchronisation character for the Manufacturer's Word.

Encoding of the characters in the Manufacturer's Word:

© ISO/IEC 2002 – All rights reserved
Copyright International Organization for Standardization
Reproduced by IHS under license with ISO
No reproduction or networking permitted without license from IHS
Not for Resale

Table 4 - Manufacturer's word characters

Value to be recorded in LPOS	Symbol Pair A0,A1	Value to be recorded in LPOS	Symbol Pair A0,A1
A	0,0	0	2,0
B	0,1	1	2,1
C	0,2	2	2,2
D	0,3	3	2,3
E	0,4	4	2,4
F	0,5	5	2,5
G	0,6	6	2,6
H	0,7	7	2,7
I	0,8	8	2,8
J	0,9	9	2,9
K	0,A	.	2,A
L	0,B	,	2,B
M	0,C	;	2,C
N	1,0	:	3,0
O	1,1	!	3,1
P	1,2	@	3,2
Q	1,3	#	3,3
R	1,4	/	3,4
S	1,5	%	3,5
T	1,6	&	3,6
U	1,7	blank	3,7
V	1,8	(	3,8
W	1,9	)	3,9
X	1,A	-	3,A
Y	1,B	+	3,B
Z	1,C	=	3,C

The information in the Manufacturer's Word shall contain only characters with translation defined in table 4. The word content shall be

"D" The word synchronisation character as defined in LPOS encoding.

yyyymmdd The Calendar Date that the servo information was written.

MMMMMMMM An eight character field for manufacturer's name.

NOTE - See annex I for information regarding vendor identification code lists and registration.

JJJJJJJJ An eight character alpha-numeric field for tape pancake identification.

SSSS A four character alpha-numeric field for servo writer identification.

V0-V19 A 20 character alpha-numeric vendor specific field.

Copyright International Organization for Standardization
Reproduced by IHS under license with ISO
No reproduction or networking permitted without license from IHS
Not for Resale
© ISO/IEC 2002 – All rights reserved

11.3.4 Cross tape identification

The identity of servo band *n* may be determined by the relative positions down the tape of frames in servo bands *n* and *n* + 1, reading with the top and bottom servo elements, respectively. The relative shifts of the *n* + 1 servo with respect to the *n* servo when the tape is moving in the forward direction (BOT to EOT) shall be as listed in table 5.

Table 5 - Cross tape identification relative position

Servo Band *n*	Servo Band *n*+1	Relative position of *n*+1 servo
0	1	Late by 33,33 μm ± 4,16 μm
1	2	Early by 33,33 μm ± 4,16 μm
2	3	Late by 66,67 μm ± 4,16 μm
3	4	Early by 66,67 μm ± 4,16 μm

11.4 Servo band location

Servo band 4 shall be nearest the Tape Reference Edge and servo band 0 shall be farthest from the Tape Reference Edge. See figure 25.

The centre of servo band 4 shall be 607,5 μm ± 20,0 μm from the Tape Reference Edge.

11.5 Servo band pitch

The distance between the centre of one servo band to the centre of an adjacent servo band shall be 2 858,8 μm ± 5,5 μm non-cumulative between all servo bands.

11.6 Nominal servo locations

Six nominal servo locations, numbered 0 to 5, are defined within each servo band. Servo locations are positions transverse to the tape within the servo band where the average distance between corresponding leading edges of the A burst relative to the B burst and C burst relative to D burst shall be as given in table 6.

Table 6 - Nominal servo locations

Servo Location	Average Distance (μm)
0	35,52
1	41,31
2	47,10
3	52,90
4	58,69
5	64,48

11.7 Long-term average servo location

The long-term average servo location shall be determined from the Average Distance measured by the servo elements reading two adjacent servo bands. The average shall be taken over 5 000 servo frames (approximately 1 m of tape). The average is defined as follows. The distance determined from the jth frame in servo band n is distance_n_j. The distance determined from the jth frame in servo band n+1 is distance_$n+1_j$.

Average Distance = $[1/(2 \times 5\,000)] \times \Sigma(\text{distance_}n_j + \text{distance_}n+1_j)$

The long term average distance for any servo location shall be within 0,1 % of the value shown in table 6.

© ISO/IEC 2002 – All rights reserved

Copyright International Organization for Standardization
Reproduced by IHS under license with ISO
No reproduction or networking permitted without license from IHS
Not for Resale

12 Method of recording data tracks

The method of recording shall be the write equalised (1,7) Run Length Limited (RLL) code in which

– a ONE is represented by a flux transition at the centre of a bit cell;

– a ZERO is represented by no flux transition in the bit cell.

12.1 Physical recording density

There shall be three test recording densities:

TRD1 shall be the recording density that results from applying the repetitive bit pattern 10 to the input of the write equalizer described in 14.2. This recording density has 3 660 RLL encoded data ONEs per mm and produces the maximum recording density.

TRD2 shall be the recording density that results from applying the repetitive bit pattern 1000 to the input of the write equalizer described in 14.2. This recording density has 1 830 RLL encoded data ONEs per mm.

TRD3 shall be the recording density that results from applying the repetitive bit pattern 10000000 to the input of the write equalizer described in 14.2. This recording density has 915 RLL encoded data ONEs per mm.

12.2 Nominal bit cell length

The nominal RLL bit cell length shall be 0,136 6 μm.

12.3 Long-term average bit cell length

The long-term average RLL bit cell length shall be measured over a minimum of 5 000 consecutive servo frames (which is approximately 1 m of tape and hence $7{,}32 \times 10^7$ consecutive cells) in a track. It shall be within 0,50 % of the nominal RLL bit cell length.

12.4 Short-term Average Bit Cell Length (STA)

The STA, referred to a particular RLL bit cell, shall be the average taken over the previous 366-bit cells (which is approximately 50 μm). It shall be within 4 % of the nominal bit cell length.

12.5 Rate of change of the STA

The rate of change of the STA, taken over any two consecutive 366-bit cell lengths, shall not exceed 0,8 %.

$100 \times |STA_n - STA_{n+1}| / STA_n \leq 0{,}8$

12.6 Bit shift

The average deviation of the interval between RLL encoded data ONEs from its nominal value shall be less than 20 % of the nominal bit cell length. This requirement is intended to cover systematic bit shift caused by a poor writing process. See annex A for the test procedure.

12.7 Recording performance test conditions

All recording performance tests shall be done as specified in clause 10, Magnetic Recording Characteristics.

12.8 Track sequence addressing

There shall be 384 data tracks, numbered 0 to 383. Data track 383 shall be the track closest to the Tape Reference Edge.

The area between adjacent servo bands is a Data Band. There shall be 4 Data Bands each with 96 data tracks. The Data Bands shall be numbered 2, 0, 1, 3 with Data Band 2 being nearest the Tape Reference Edge and Data Band 3 being farthest from the Tape Reference Edge.

The sets of 12 data tracks in a Data Band, which are accessed in a spiral manner, are data sub bands. There shall be eight data sub bands per Data Band.

The set of tracks recorded concurrently is a track group. The tape shall contain 48 track groups. 24 shall be written from LP3, and extend beyond LP4. The other 24 shall be written starting from beyond LP4, and extend beyond LP3.

Wraps shall be numbered sequentially in the order they are processed, starting with wrap 0. The wraps shall be recorded in a serpentine fashion starting in Data Band 0. Wraps recorded while tape is moving from BOT to EOT are Forward Wraps. Wraps recorded while tape is moving from EOT to BOT are Reverse Wraps. Track wraps shall be recorded sequentially as Forward Wraps and Reverse Wraps.

Copyright International Organization for Standardization
Reproduced by IHS under license with ISO
No reproduction or networking permitted without license from IHS
Not for Resale
© ISO/IEC 2002 – All rights reserved

12.9 Location of data tracks

The location of data tracks is referenced to the centreline of servo location 0. See figure 30.

The distance between the centreline of the first data track in a data band and servo location 0 shall be

$l_1 = 180{,}70\ \mu m \pm 0{,}55\ \mu m$

The distances between centrelines of adjacent tracks in a track wrap shall be

$l_2 = 333{,}00\ \mu m \pm 0{,}55\ \mu m$

The distance between centrelines of servo location 0 and servo location 5 shall be

$l_3 = 137{,}50\ \mu m \pm 0{,}55\ \mu m$

The distances between the centrelines of servo locations 0 in adjacent servo bands shall be

$l_4 = 2\ 858{,}80\ \mu m \pm 5{,}50\ \mu m$

The distance between centrelines of the first track of the first reverse wrap and servo location 5 shall be

$l_5 = 347{,}2\ \mu m \pm 0{,}55\ \mu m$

The angle α_{15} is the stripe azimuth angle specified in 11.2.3.

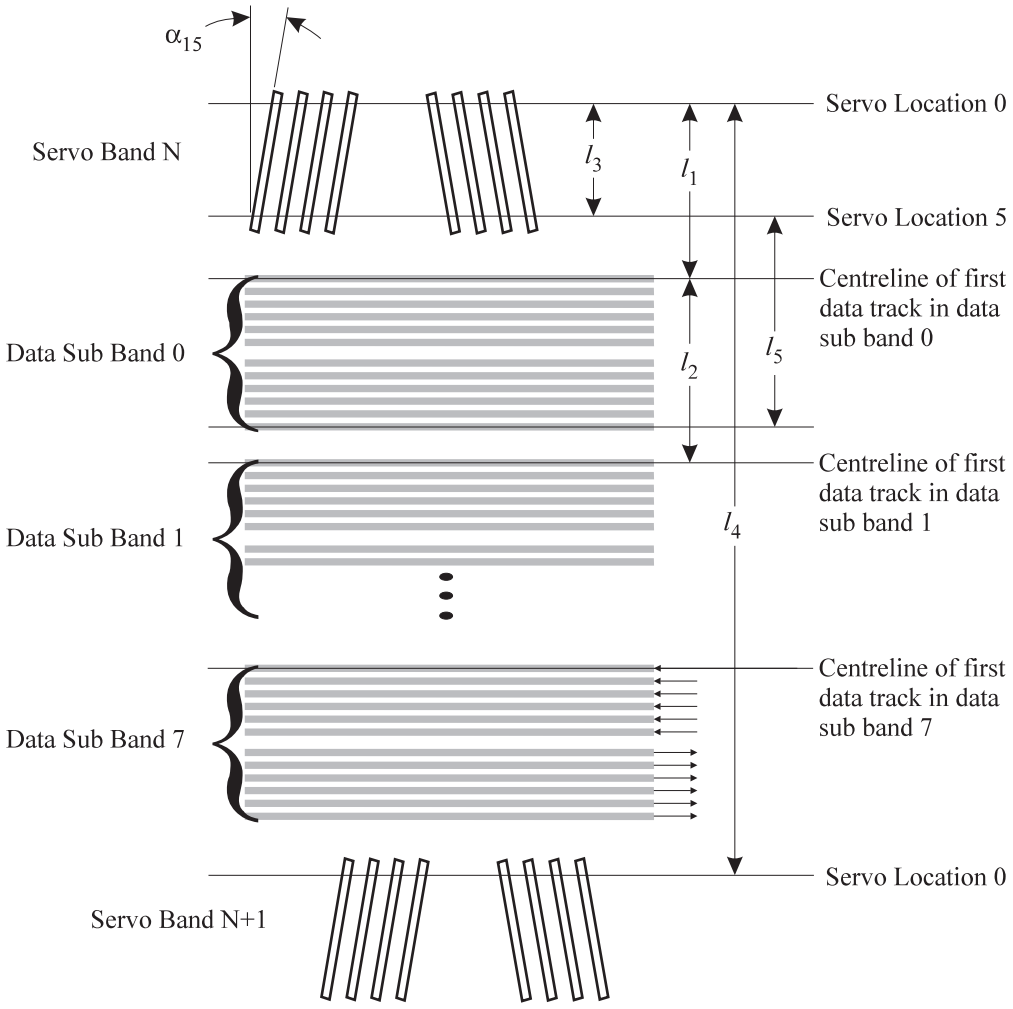

Figure 30 - Data band

12.10 Track width

The nominal width of each recorded data track shall be 27,5 µm.

© ISO/IEC 2002 – All rights reserved
Copyright International Organization for Standardization
Reproduced by IHS under license with ISO
No reproduction or networking permitted without license from IHS
Not for Resale

The edges of a written track shall be a minimum of 10,0 μm from the nominal track centreline.

12.11 Adjacent track pitch

The distance between the centrelines of any two adjacent tracks that are recorded with the tape moving in the same direction, measured perpendicular to the track centrelines, shall be 27,5 μm nominal.

The distance between the centrelines of any two adjacent tracks that are recorded with the tape moving in opposite directions, measured perpendicular to the track centrelines, shall be 29,0 μm nominal.

12.12 Azimuth

The angle that a data flux transition makes with a line perpendicular to the Tape Reference Edge shall not be greater than ± 12,0 ' of arc.

12.13 Total character skew

No bit in a track belonging to the same CQ Set shall be displaced by more than 50 RLL bit cell lengths from a simultaneously recorded bit in any track in the same CQ Set when measured in a direction parallel to the Tape Reference Edge.

12.14 Channel Layout

The logical track layout shall be as follows where physical tracks are listed in ascending logical track order from 0 to 7.

Copyright International Organization for Standardization
Reproduced by IHS under license with ISO
No reproduction or networking permitted without license from IHS
Not for Resale
© ISO/IEC 2002 – All rights reserved

Table 7 - Channel Layout

Wrap	Data Band	Physical Tracks	Wrap	Data Band	Physical Tracks
0	0	192 204 216 228 240 252 264 276	24	2	288 300 312 324 336 348 360 372
1	0	203 215 227 239 251 263 275 287	25	2	299 311 323 335 347 359 371 383
2	0	193 205 217 229 241 253 265 277	26	2	289 301 313 325 337 349 361 373
3	0	202 214 226 238 250 262 274 286	27	2	298 310 322 334 346 358 370 382
4	0	194 206 218 230 242 254 266 278	28	2	290 302 314 326 338 350 362 374
5	0	201 213 225 237 249 261 273 285	29	2	297 309 321 333 345 357 369 381
6	0	195 207 219 231 243 255 267 279	30	2	291 303 315 327 339 351 363 375
7	0	200 212 224 236 248 260 272 284	31	2	296 308 320 332 344 356 368 380
8	0	196 208 220 232 244 256 268 280	32	2	292 304 316 328 340 352 364 376
9	0	199 211 223 235 247 259 271 283	33	2	295 307 319 331 343 355 367 379
10	0	197 209 221 233 245 257 269 281	34	2	293 305 317 329 341 353 365 377
11	0	198 210 222 234 246 258 270 282	35	2	294 306 318 330 342 354 366 378
12	1	96 108 120 132 144 156 168 180	36	3	0 12 24 36 48 60 72 84
13	1	107 119 131 143 155 167 179 191	37	3	11 23 35 47 59 71 83 95
14	1	97 109 121 133 145 157 169 181	38	3	1 13 25 37 49 61 73 85
15	1	106 118 130 142 154 166 178 190	39	3	10 22 34 46 58 70 82 94
16	1	98 110 122 134 146 158 170 182	40	3	2 14 26 38 50 62 74 86
17	1	105 117 129 141 153 165 177 189	41	3	9 21 33 45 57 69 81 93
18	1	99 111 123 135 147 159 171 183	42	3	3 15 27 39 51 63 75 87
19	1	104 116 128 140 152 164 176 188	43	3	8 20 32 44 56 68 80 92
20	1	100 112 124 136 148 160 172 184	44	3	4 16 28 40 52 64 76 88
21	1	103 115 127 139 151 163 175 187	45	3	7 19 31 43 55 67 79 91
22	1	101 113 125 137 149 161 173 185	46	3	5 17 29 41 53 65 77 89
23	1	102 114 126 138 150 162 174 186	47	3	6 18 30 42 54 66 78 90

13 Format

13.1 General

The smallest collection of data supported by the format shall be a Record. The largest Record supported by this format shall be 2^{24} -1 bytes. The host may use File Marks to indicate the logical separation(s) of the data within a structuring scheme.

In the following description all operations on the data received from the host computer, including the use of error detecting and correcting codes are described. Then the method of recording on the tape and the tape layout itself are described.

Figure 31 shows the way in which the data shall be transformed as it flows from the host to the recorded tape.

A 4-byte CRC shall be added to the end of each Record received from the host thereby forming a Protected Record. The data compression algorithm shall process one or more Protected Records and File Marks to produce a stream of Symbols. Symbols shall consist of user bytes, File Marks, and Control Symbols. The Symbol stream shall be broken into sets of 403 884 bytes to which a 468-byte Data Set Information Table (DSIT) shall be appended to form a 404 352-byte Data Set. The Data Set shall be split into 16 Sub Data Sets of 25 272 bytes. Each Sub Data Set shall be arranged into a 54×468-byte matrix. Two levels of

© ISO/IEC 2002 – All rights reserved
Copyright International Organization for Standardization
Reproduced by IHS under license with ISO
No reproduction or networking permitted without license from IHS
Not for Resale

Error Correction Coding shall be added to the Data Set. To each 468-byte row of the Sub Data Set shall be added 12 bytes of C1 ECC forming an interleaved Codeword Pair of 480 bytes. This results in 54 Codeword Pairs arranged in a 54×480-byte matrix. To each 54-byte column of this matrix shall be added 10 bytes of C2 ECC forming 10 additional Codeword Pairs. The resulting 64×480-byte matrix shall be an ECC Encoded Sub Data Set comprising 64 Codeword Pairs.

An ECC Encoded Data Set shall contain 491 520 bytes consisting of 16 64×480-byte ECC Encoded Sub Data Sets. Each row of each ECC Encoded Sub Data Set is a 480-byte ECC Encoded Codeword Pair. Thus there are 1 024 ECC Encoded Codeword Pairs per ECC Encoded Data Set.

Codeword Quads shall be formed by combining headers with Codeword Pairs from corresponding rows of successive ECC Encoded Sub Data Sets.

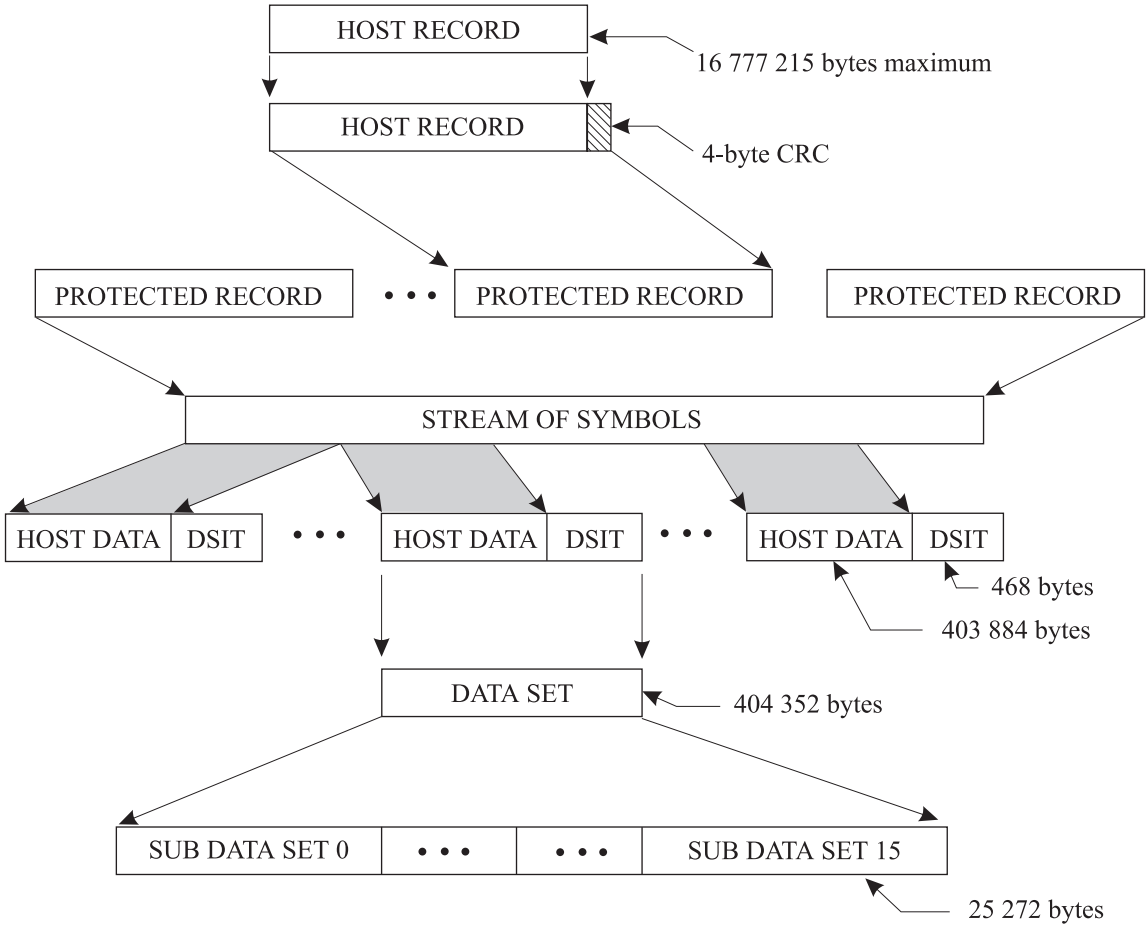

Figure 31 - Data flow from host to tape

13.2 Protected Record

Records are received from the host system for processing and recording by the tape drive system. A 4-byte CRC shall be appended to each User Data Record to create a Protected Record. These CRC bytes shall be Reed-Solomon (N, N-4) codes over GF (256).

Calculation in a GF (256) shall be defined by

$P(x) = x^8 + x^4 + x^3 + x^2 + 1$

A primitive element α in GF (256) shall be

$\alpha = (0\ 0\ 0\ 0\ 0\ 0\ 1\ 0)$

Copyright International Organization for Standardization
Reproduced by IHS under license with ISO
No reproduction or networking permitted without license from IHS
Not for Resale
© ISO/IEC 2002 – All rights reserved

The generator polynomial shall be

$$G(x) = (x + \alpha^{126})(x + \alpha^{127})(x + \alpha^{128})(x + \alpha^{129})$$

$$= x^4 \oplus \alpha^{201}x^3 \oplus \alpha^{246}x^2 \oplus \alpha^{201}x \oplus 1$$

The CRC bytes shall be generated by processing the requisite bytes through a generator circuit whose registers shall be set to ZEROs prior to beginning processing. See figure 32. Registers R0 to R3 shall be 8 bits wide. Data bytes shall be fed sequentially into the encoder. After the requisite bytes have been processed, the content of R3 is CRC3, that of R2 is CRC2, that of R1 is CRC1, and that of R0 is CRC0. When these CRC bytes are appended to data bytes, or placed into a field, CRC3 shall be the first byte appended, followed by CRC2, CRC1, and then CRC0.

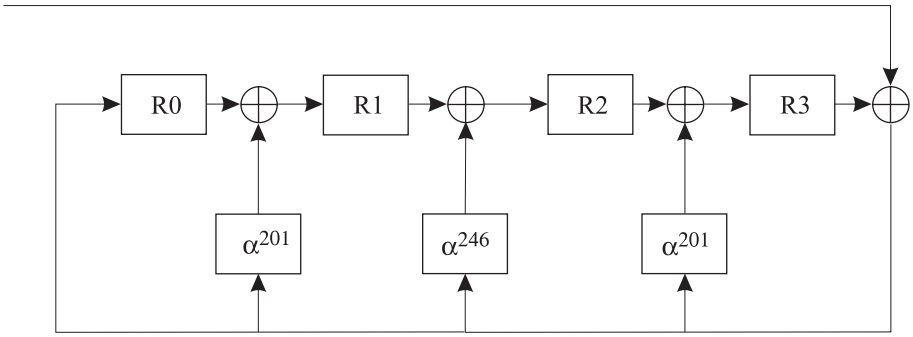

Figure 32 - CRC generator circuit

13.3 Processed Protected Record Sequence

One or more Protected Records and File Marks shall be processed by the data compression algorithm (ISO/IEC 22091) to produce a stream of Symbols. File Marks may be received between host Records and shall be encoded into Control Symbols outside of the Processed Protected Records. Symbols within Processed Protected Records can be Processed Data Symbols or Control Symbols, with the exception that File Mark and End Marker symbols shall not occur within Processed Protected Records. Symbols outside of Processed Protected Records can only be Control Symbols. End of Record Control Symbols shall only occur within Processed Protected Records.

13.3.1 Control Symbols

Control Symbols shall be used to control the operation of the data compression process. Control Symbols identify points at which the compression algorithm is reset, the encoding scheme currently in use, the locations of Record boundaries, File Marks, Flush points and End Markers. The Control Symbols shall be as defined in table 8.

© ISO/IEC 2002 – All rights reserved
Copyright International Organization for Standardization
Reproduced by IHS under license with ISO
No reproduction or networking permitted without license from IHS
Not for Resale

Table 8 - Data Compression Control Symbols

Control Symbol Name	Align with next 32-bit boundary	Description
Reset 1	No	Used to reset the Data Compression History Buffer and to assume Scheme 1.
Reset 2	No	Used to reset the Data Compression History Buffer and to assume Scheme 2.
Scheme 1	No	Used to indicate that the Processed Protected Record sequence is being processed using Scheme 1.
Scheme 2	No	Used to indicate that the Processed Protected Record sequence is being processed using Scheme 2.
File Mark	Yes	Used to represent a File Mark in the Processed Protected Record Sequence.
End Of Record	Yes	Used to indicate the end of a record in the Processed Protected Record Sequence.
Flush	Yes	Used to force the start of the next codeword in the Processed Protected Record Sequence to be aligned with a 32-bit boundary.
End Marker	Yes	Used to indicate that no more data within the current Data Set is part of the Processed Protected Record Sequence.

To allow for any subsequent appending, those Symbols that precede appendable points shall be aligned with the next 32-bit boundary. This requirement is also indicated in table 8. See 13.3.4 for a description of the alignment rules.

File Mark and End Marker Control Symbols shall start on a 32-bit boundary. Those Control Symbols, which are required to be aligned with a 32-bit boundary (table 8 identifies which Control Symbols shall be aligned), shall be extended to the required length by padding with ONEs or ZEROs. The value used for padding is defined, for each Control Symbol, in the data compression algorithm (ISO/IEC 22091).

13.3.2 End Marker

The stream of symbols written into a series of Data Sets for a continuous stream of Protected Records and File Marks shall be considered a Compressed Data Stream. The end of each Compressed Data Stream shall be indicated by an End Marker control symbol. When an End Marker is written into a Data Set, the rest of the information in that Data Set shall be undefined. Any subsequent Protected Records or File Marks shall start from the beginning of the next Data Set.

13.3.3 Access Points

Access Points shall designate the position at which the data compression history buffer is reset and at which decompression can begin, and shall be at 32-bit boundaries. There shall be, at most, one Access Point per Data Set; the location of which shall be specified in the DSIT (Data Set Information Table, see 13.5).

The Access Point shall be positioned immediately following the end of any Record spanning into the Data Set from a previous Data Set, or at the beginning of the Data Set if no such spanning occurred. In the first Data Set following the Format Identification Data Set (FID) the Access Point shall be positioned at the beginning of the Data Set. If the Record spanning into the Data Set is so long that it either fills the Data Set completely, or spans into the following Data Set, then there shall be no access point in the Data Set and the content of the access point field in the DSIT shall be set to (FFFFFFFF).

A Data Set:

– Shall contain an Access Point at the beginning of the Data Set if the Data Set begins with a new Protected Record or a File Mark.

– Shall never contain more than one Access Point.

Copyright International Organization for Standardization
Reproduced by IHS under license with ISO
No reproduction or networking permitted without license from IHS
Not for Resale
© ISO/IEC 2002 – All rights reserved

– Shall never have a File Mark preceding an Access Point.

– Shall have an Access Point immediately following the first End of Record within the Data Set provided that the three rules above are not violated. This will only occur when a Record begun in a previous Data Set spans into this Data Set. In this case, the Access Point shall point to an End Marker Control Symbol if there are no subsequent Records or File Marks in the Data Set.

13.3.4 Alignment and append points

Whenever a Symbol is required to be aligned with the next 32-bit boundary, such as at an Access Point, that Symbol shall be extended up to the 32-bit boundary, before being written to the Data Set. See table 8 for the Control Symbols that shall be aligned on 32-bit boundaries.

An append point is a location within the Data Set at which data may be appended in subsequent writing operations. Append points shall be the first byte location, on a 32-bit boundary, following an End Of Record, File Mark, or Flush point. All append points shall be coincident with a 32-bit boundary.

13.4 Data Set

Data Sets shall be the smallest complete unit of information written to or read from the tape.

There shall be four types of Data Set:

– Format Identification Data Set (FID)

– User Data Set

– EOD Data Set

– Housekeeping Data Set

The Data Set shall consist of two parts. See figure 33. The first part shall be the Data Region having 403 884 bytes. The content of the Data Region is dependent upon the type of Data Set being recorded. The second part shall be the Data Set Information Table (DSIT) having 468 bytes. The information in the DSIT shall describe the content of the Data Region. For all types of Data Set, data shall be placed in the Data Region and the DSIT shall be appended to form the 404 352-byte Data Set. The information in the DSIT shall not be processed by data compression.

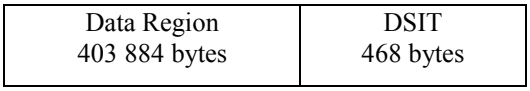

Figure 33 - Data Set

Data Sets within the User Data area (see 15.3) shall be identified by their ordinal number. The first Data Set recorded on tape within the User Data Area, the FID, shall be Data Set number zero. The Data Set number shall increment by one for each subsequent Data Set recorded on tape.

The first byte in the Data Set shall be byte 0 and the last byte shall be byte 404 351.

13.4.1 Format Identification Data Set (FID)

The FID shall contain information regarding the format of the tape and about the drive that wrote the FID. The FID shall be the first Data Set within the User Data area. The Data Set number of the FID shall be (00000000).

The Data Region of the FID shall contain 863 instances of the 468 bytes defined in table 9. These bytes shall contain data extracted from the LTO CM, with the addition of a region that may be used for Housekeeping information, the contents of which shall be undefined for interchange. If the Media Manufacturer's Information page, which is optional in the CM, is present in the CM, then it shall be copied into the FID; and if it is absent, then the respective 64 bytes in the FID shall each be set to (00).

© ISO/IEC 2002 – All rights reserved
Copyright International Organization for Standardization
Reproduced by IHS under license with ISO
No reproduction or networking permitted without license from IHS
Not for Resale

Table 9 - Content of FID Data Region

Byte Position	Length	Contents
0	32	LTO CM Manufacturer's Information
32	64	Cartridge Manufacturer's Information
96	64	Media Manufacturer's Information
160	64	Initialisation Data
224	104	Reserved
328	128	FID Housekeeping
456	12	FID Housekeeping C1

13.4.1.1 FID Housekeeping C1

This field shall contain 12 bytes of ECC calculated over bytes 328 to 455 in the FID Housekeeping field. If the FID Housekeeping field contains all ZEROs then the FID Housekeeping C1 field shall also be all ZEROs. The C1 bytes shall be calculated as follows:

- The even numbered bytes in the FID Housekeeping field shall be processed by the C1 ECC to generate 6 bytes of ECC, which shall be placed in the even numbered bytes of the FID Housekeeping C1 field.
- The odd numbered bytes in the FID Housekeeping field shall be processed by the C1 ECC to generate 6 bytes of ECC, which shall be placed in the odd numbered bytes of the FID Housekeeping C1 field.

See 13.6.2 for details of the C1 ECC algorithm.

13.4.2 User Data Set

The User Data Set shall contain Processed Symbols produced from Protected Processed Records, File Marks, and Control Symbols. The Data Set number of the first User Data Set recorded on tape shall be (00000001).

The content of the Data Region of a User Data Set shall consist of the stream of Symbols. The stream of Symbols shall be broken into sets of 403 884 bytes. Each set shall be placed into the Data Region of a Data Set.

When the Data Set is to be written to tape and the number of Symbols is insufficient to fill the Data Region of the Data Set, then the Data Set shall be completed as follows. The last valid Symbol shall be followed by an End Marker Control Symbol. The contents of the bytes remaining between the End Marker and the start of the DSIT are not specified and shall be ignored in interchange.

The number of bytes that are occupied by the valid Symbols up to, but not including, the End Marker Control Symbol shall be stored in the Valid Data Length field in the DSIT of the Data Set.

13.4.3 EOD Data Set

The EOD Data Set shall indicate the end of recorded user data. If no user data has been recorded, then the EOD Data Set shall immediately follow the FID. User data recorded after the EOD Data Set, such as that remaining from previous uses of the tape, shall be considered inaccessible and invalid.

The content of the Data Region of an EOD Data Set is not specified and shall be ignored in interchange. The ECC within the Data Region shall be valid.

13.4.4 Housekeeping Data Set

Housekeeping Data Sets shall only be recorded in the Calibration Region of tape. The content of the Data Region of any Housekeeping Data Set is not specified and shall be ignored for interchange. The Data Set number of any and all Housekeeping Data Sets recorded on tape shall be (FFFFFFFF). Housekeeping Data Sets shall only be written by the vendor that wrote the FID.

13.5 Data Set Information Table (DSIT)

The Data Set Information Table shall describe the content of the Data Set.

Copyright International Organization for Standardization
Reproduced by IHS under license with ISO
No reproduction or networking permitted without license from IHS
Not for Resale
© ISO/IEC 2002 – All rights reserved

The DSIT shall have the fields described in table 10. The number of bytes for each field, and the locations of the fields within the DSIT shall be as shown in table 10. Within each field the most-significant byte shall be in the lowest-numbered byte position and the least-significant byte shall be in the highest-numbered byte position.

Table 10 - Data Set Information Table

Byte positions	Length in bytes	Field Name
0	228	Drive Manufacturer Use
228	12	Drive Manufacturere Use C1
240	176	Reserved
416	8	Drive Manufacturer's Identity
424	4	Data Set number
428	4	Valid Data Length
432	4	Access Point Offset
436	6	Total Records
442	6	Total File Marks
448	4	Record Count
452	4	File Mark Count
456	2	Thread Count
458	1	Data Set Type
459	1	Data Set Flags
460	4	Thread Write Pass
464	4	Tape Write Pass

13.5.1 Drive Manufacturer Use

This field shall be be used only by the drive manufacturer identified in the Drive Manufacturer's Identity field. The content of this field is not defined in this International Standard and shall be ignored in interchange.

13.5.2 Drive Manufacturer Use C1

This field shall contain 12 bytes of ECC calculated over the 228 bytes in the Drive Manufacturer Use field. If the Drive Manufacturer Use field contains all ZEROs then the Drive Manufacturer Use C1 field shall also be all ZEROs. The C1 bytes shall be calculated as follows:

– The even numbered bytes in the Drive Manufacturer Use field shall be processed by the C1 ECC to generate 6 bytes of ECC, which shall be placed in the even numbered bytes of the Drive Manufacturer Use C1 field.

– The odd numbered bytes in the Drive Manufacturer Use field shall be processed by the C1 ECC to generate 6 bytes of ECC, which shall be placed in the odd numbered bytes of the Drive Manufacturer Use C1 field.

See 13.6.2 for details of the C1 ECC algorithm.

13.5.3 Reserved

All bytes of this field shall be set to (00). These bytes shall be ignored in interchange.

13.5.4 Drive Manufacturer's Identity

This field shall identify the manufacturer of the drive that wrote the current Data Set. See annex I.

13.5.5 Data Set number

The Data Set number shall be the ordinal number of the Data Set from BOT. The first Data Set shall be numbered 0. The Data Set number of subsequent Data Sets shall increment by one for each Data Set recorded.

The content of the Data Set number field shall be as shown in table 11.

© ISO/IEC 2002 – All rights reserved
Copyright International Organization for Standardization
Reproduced by IHS under license with ISO
No reproduction or networking permitted without license from IHS
Not for Resale

Table 11 - Data Set number

Data Set Type	Value
User	Previous Data Set number + 1
EOD	Previous Data Set number + 1
FID	(00000000)
Housekeeping	(FFFFFFFF)

13.5.6 Valid Data Length

The Valid Data Length field shall contain the count of the number of bytes in the Data Set that contain processed Symbols, up to, but not including, any End Marker that may exist within the Data Set.

The content of the Valid Data Length field shall be as shown in table 12.

Table 12 - Valid Data Length

Data Set Type	Value
User	See above
EOD	(00000000)
FID	(00000000)
Housekeeping	See above

13.5.7 Access Point Offset

The Access Point Offset field shall contain the count of bytes within the Data Set before the location of the Access Point. Therefore, if the Access Point is the first byte of the Data Set, then the Access Point Offset shall be set to (00000000). If there is no Access Point within the Data Set, then this field shall be set to (FFFFFFFF).

The content of the Access Point Offset field shall be as shown in table 13.

Table 13 - Access Point Offset

Data Set Type	Value
User	See above
EOD	(FFFFFFFF)
FID	(FFFFFFFF)
Housekeeping	(FFFFFFFF)

13.5.8 Total Records

The Total Records field shall contain the count of Protected Records that have been completely processed in all Data Sets from BOT up to the Access Point that exists in this Data Set.

If no Access Point exists in this Data Set then this field shall contain the count of Protected Records that have been completely processed in all Data Sets from BOT up to the latest previous Access Point. If this Data Set is an EOD Data Set, then the count shall be computed as if it held an Access Point.

The content of the Total Records field shall be as shown in table 14.

Copyright International Organization for Standardization
Reproduced by IHS under license with ISO
No reproduction or networking permitted without license from IHS
Not for Resale
© ISO/IEC 2002 – All rights reserved

Table 14 - Total Records

Data Set Type	Value
User	See above
EOD	See above
FID	(000000000000)
Housekeeping	(000000000000)

13.5.9 Total File Marks

The Total File Marks field shall contain the count of File Marks that have been processed in all Data Sets from BOT up to the Access Point that exists in this Data Set.

If no Access Point exists in this Data Set then this field shall contain the count of File Marks that have been processed in all Data Sets from BOT up to the latest previous Access Point. If this Data Set is an EOD Data Set, then the count shall be computed as if it held an Access Point.

The content of the Total File Marks field shall be as shown in table 15.

Table 15 - Total File Marks

Data Set Type	Value
User	See above
EOD	See above
FID	(000000000000)
Housekeeping	(000000000000)

13.5.10 Record Count

The Record Count field shall specify the number of Protected Records that exist between the Access Point that exists in this Data Set and the first Access Point that occurs in a subsequent Data Set.

If no Access Point exists in this Data Set then this field shall specify the number of Protected Records that exist between the latest previous Access Point and the first Access Point that occurs in a subsequent Data Set.

If a Record starts in a previous Data Set, and ends in the current Data Set, then that Record is not counted. If there are no Access Points in the current Data Set, then no Records start or end within this Data Set, and the Record Count shall be the same as the Record Count in the DSIT of the previous Data Set.

If a Record starts in this Data Set, but is not completed until a subsequent Data Set, then it shall be counted in the current Data Set.

If there is no subsequent Data Set then the Record Count shall be computed for the above conditions as if the EOD Data Set contained an Access Point.

The content of the Record Count field shall be as shown in table 16.

Table 16 - Record Count

Data Set Type	Value
User	See above
EOD	(00000000)
FID	(00000000)
Housekeeping	(00000000)

© ISO/IEC 2002 – All rights reserved
Copyright International Organization for Standardization
Reproduced by IHS under license with ISO
No reproduction or networking permitted without license from IHS
Not for Resale

NOTE - Within this format, File Marks are not counted as Records.

13.5.11 File Mark Count

The File Mark Count field shall contain the number of File Marks written between the Access Point that exists in this Data Set and the first Access Point that occurs in a subsequent Data Set.

If no Access Point exists in this Data Set then this field shall specify the number of File Marks that exist between the latest previous Access Point and the first Access Point that occurs in a subsequent Data Set.

If there is no subsequent Data Set then the File Mark Count shall be computed for the above conditions as if the EOD Data Set contained an Access Point.

The content of the File Mark Count field shall be as shown in table 17.

Table 17 - File Mark Count

Data Set Type	Value
User	See above
EOD	(00000000)
FID	(00000000)
Housekeeping	(00000000)

13.5.12 Thread Count

The Thread Count field shall contain the count of the number of times that the leader pin of the cartridge has been extracted (threaded) from the cartridge at the time that the Data Set was written. This shall be equal to the Thread Count field in the LTO CM, Cartridge Status and Tape Alert Flags Page (annex D.2.7.2) at the time of writing.

The content of the Thread Count field shall be as shown in table 18.

Table 18 - Thread Count

Data Set Type	Value
User	See above
EOD	See above
FID	See above
Housekeeping	See above

13.5.13 Data Set Type

The Data Set Type field shall indicate the Data Set type.

The content of the Data Set Type field shall be as shown in table 19.

Table 19 - Data Set Type

Data Set Type	Value
User	(00)
EOD	(01)
FID	(02)
Housekeeping	(0F)

Copyright International Organization for Standardization
Reproduced by IHS under license with ISO
No reproduction or networking permitted without license from IHS
Not for Resale
© ISO/IEC 2002 – All rights reserved

13.5.14 Data Set Flags

The Data Set Flags field shall indicate special features. The setting of the bit to ONE shall indicate that the feature occurs within the Data Set.

Bit 0: when set to ONE shall indicate that the Data Set is a Beginning of Wrap Data Set.

Bits 1 - 7: shall be set to ZERO.

13.5.15 Thread Write Pass

The Thread Write Pass field shall be set to 0 each time that a cartridge is threaded. While the cartridge is threaded, this field shall be incremented by 1 each time that the Tape Write Pass field is increased.

The content of the Load Write Pass field shall be as shown in table 20.

Table 20 - Load Write Pass

Data Set Type	Value
User	See above
EOD	See above
FID	Previous Load Write Pass +1
Housekeeping	Previous Load Write Pass +1

13.5.16 Tape Write Pass

A Tape Write Pass field shall exist both in the DSIT and in the Codeword Pair Headers (see 13.7.1). These two fields shall agree, when an Interrupted Data Set occurs (see 15.4). The Tape Write Pass shall be set to 1 when the tape is first written to. The value shall be incremented by 1 in the following circumstances:

– When an append operation causes any existing Data Set, including an EOD Data Set, to be overwritten.

– When writing from Beginning of Wrap.

– When an Interrupted Data Set is rewritten, then this field need not be changed in the DSIT although this field must be changed in the Codeword Pair Header. Thus it is possible that the Tape Write Pass field in the Codeword Pair Header is greater than that in the DSIT (see 15.10).

The content of the Tape Write Pass field shall be as shown in table 21.

Table 21 - Tape Write Pass

Data Set Type	Value
User	See above
EOD	See above
FID	Previous Tape Write Pass +1
Housekeeping	Previous Tape Write Pass +1

13.6 ECC

The Data Set shall be protected by two orthogonal Reed-Solomon codes. These are called C1 and C2. The Error Correction Coding bytes shall be added to the 404 352-byte Data Set thereby producing the 491 520-byte ECC Encoded Data Set.

--`,,`,,`-`-`,,`,,`,`,,`---

© ISO/IEC 2002 – All rights reserved
Copyright International Organization for Standardization
Reproduced by IHS under license with ISO
No reproduction or networking permitted without license from IHS
Not for Resale

13.6.1 Sub Data Set

The Sub Data Set shall be the basic data unit processed by the ECC algorithm. The Sub Data Set shall contain 25 272 bytes organised as a 54×468-byte matrix. Sixteen Sub Data Sets shall be constructed from each Data Set.

The first Sub Data Set shall be filled by placing the first Data Set byte into row 0, column 0 of the Sub Data Set and continuing as shown in figure 34. Subsequent Sub Data Sets shall be filled in the same manner, in order.

	0	**1**	**2**	**3**	**4**	. . .	**463**	**464**	**465**	**466**	**467**
0	0	1	2	3	4		463	464	465	466	467
1	468										
.											
.											
52											24803
53	24804	24805	24806	24807	24808		25267	25268	25269	25270	25271

Figure 34 - Sub Data Set

13.6.2 C1 Sub Data Set

The C1 Sub Data Set shall be the result of processing a Sub Data Set by the C1 ECC algorithm. The processing shall add 12 bytes of C1 ECC to each 468-byte row of the Sub Data Set forming a 54×480 matrix of 25 920 bytes. See figure 35.

First, a (240, 234, 7) Reed-Solomon code shall be applied to the 234 even numbered bytes in each row producing 6 C1 ECC bytes. These bytes shall be placed in the even numbered C1 Parity locations for that row. Then the same Reed-Solomon code shall be applied to the 234 odd numbered bytes with the resulting 6 C1 ECC bytes placed in the odd numbered C1 Parity locations for that row.

Each row of the matrix shall comprise one interleaved Codeword Pair of 480 bytes. The even numbered bytes shall form the first Codeword of the Codeword Pair and the odd numbered bytes shall form the second Codeword of the Codeword Pair.

Calculation in a GF (256) shall be defined by

$$P(x) = x^8 + x^4 + x^3 + x^2 + 1$$

A primitive element α in GF (256) shall be

$$\alpha = (0\ 0\ 0\ 0\ 0\ 0\ 1\ 0)$$

The generator polynomial shall be

$$G(x) = (x + \alpha^{125})(x + \alpha^{126})(x + \alpha^{127})(x + \alpha^{128})(x + \alpha^{129})(x + \alpha^{130})$$

$$= x^6 \oplus \alpha^{36} x^5 \oplus \alpha^{250} x^4 \oplus \alpha^{254} x^3 \oplus \alpha^{250} x^2 \oplus \alpha^{36} x \oplus 1$$

The ECC bytes shall be generated by processing the requisite bytes through a generator circuit whose registers shall be set to (00) prior to beginning processing. See figure 36. Registers R0 to R5 shall be 8 bits wide. Data bytes shall be fed sequentially into the encoder. After the requisite bytes have been processed, the content of R5 is ECC5, that of R4 is ECC4, etc. When these ECC bytes are appended to data bytes, or placed into a field, ECC5 shall be the first byte appended, followed by ECC4, ECC3, etc.

	0	**1**	**2**	. . .	**465**	**466**	**467**	**468**	. . .	**479**
0	0	1	2		465	466	467			
1				User Data					C1 ECC Information	
.										
52										
53	24804	24805	24806		25269	25270	25271			

Figure 35 - C1 Sub Data Set

Copyright International Organization for Standardization
Reproduced by IHS under license with ISO
No reproduction or networking permitted without license from IHS
Not for Resale
© ISO/IEC 2002 – All rights reserved

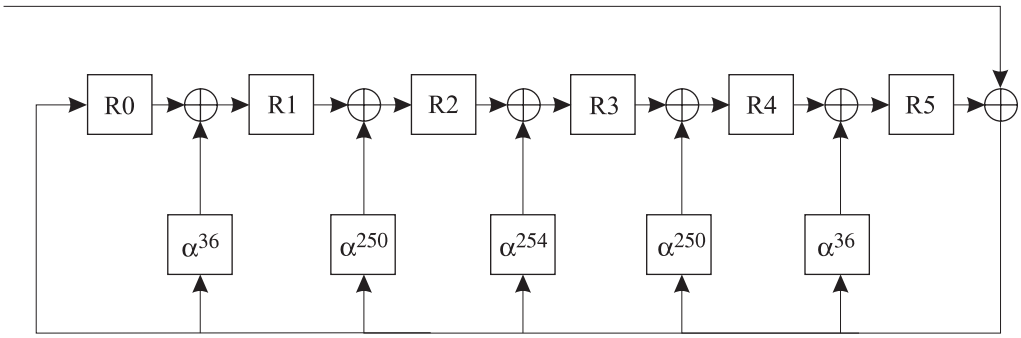

Figure 36 - C1 ECC

13.6.3 ECC Encoded Sub Data Set

The ECC Encoded Sub Data Set shall be the result of processing a C1 Sub Data Set by the C2 ECC algorithm. The processing shall add 10 bytes of C2 ECC to each 54-byte column of the C1 Sub Data Set. See figure 37.

A (64, 54, 11) Reed-Solomon shall be applied to each 54-byte column of the Codeword Pair matrix producing 10 C2 ECC bytes per column. The added 10 bytes of C2 ECC shall form 10 additional Codeword Pairs. The resulting 64×480 matrix of 30 720 bytes shall be an ECC Encoded Sub Data Set consisting of 64 Codeword Pairs.

Calculation in a GF (256) shall be defined by

$P(x) = x^8 + x^4 + x^3 + x^2 + 1$

A primitive element α in GF (256) shall be

$\alpha = (0\ 0\ 0\ 0\ 0\ 0\ 1\ 0)$

The generator polynomial shall be

$G(x) = (x+\alpha^{123})(x+\alpha^{124})(x+\alpha^{125})(x+\alpha^{126})(x+\alpha^{127})(x+\alpha^{128})(x+\alpha^{129})(x+\alpha^{130})(x+\alpha^{131})\ (x+\alpha^{132})$

$= x^{10} \oplus \alpha^{119}x^9 \oplus \alpha^{58}x^8 \oplus \alpha^{160}x^7 \oplus \alpha^{43}x^6 \oplus \alpha^{223}x^5 \oplus \alpha^{43}x^4 \oplus \alpha^{160}x^3 \oplus \alpha^{58}x^2 \oplus \alpha^{119}x \oplus 1$

The ECC bytes shall be generated by processing the requisite bytes through a generator circuit whose registers shall be set to (00) prior to beginning processing. See figure 38. Registers R0 to R9 shall be 8 bits wide. Data bytes shall be fed sequentially into the encoder. After the requisite bytes have been processed, the content of R9 is ECC9, that of R8 is ECC8, that of R7 is ECC7, etc. When these ECC bytes are appended to data bytes, or placed into a field, ECC9 shall be the first byte appended, followed by ECC8, ECC7, etc.

	0	**1**	. . .	**478**	**479**
0					
1 . . **52**			C1 Codeword Pairs		
53					
54					
. .			C2 ECC Information		
63					

Figure 37 - ECC Encoded Sub Data Set

© ISO/IEC 2002 – All rights reserved
Copyright International Organization for Standardization
Reproduced by IHS under license with ISO
No reproduction or networking permitted without license from IHS
Not for Resale

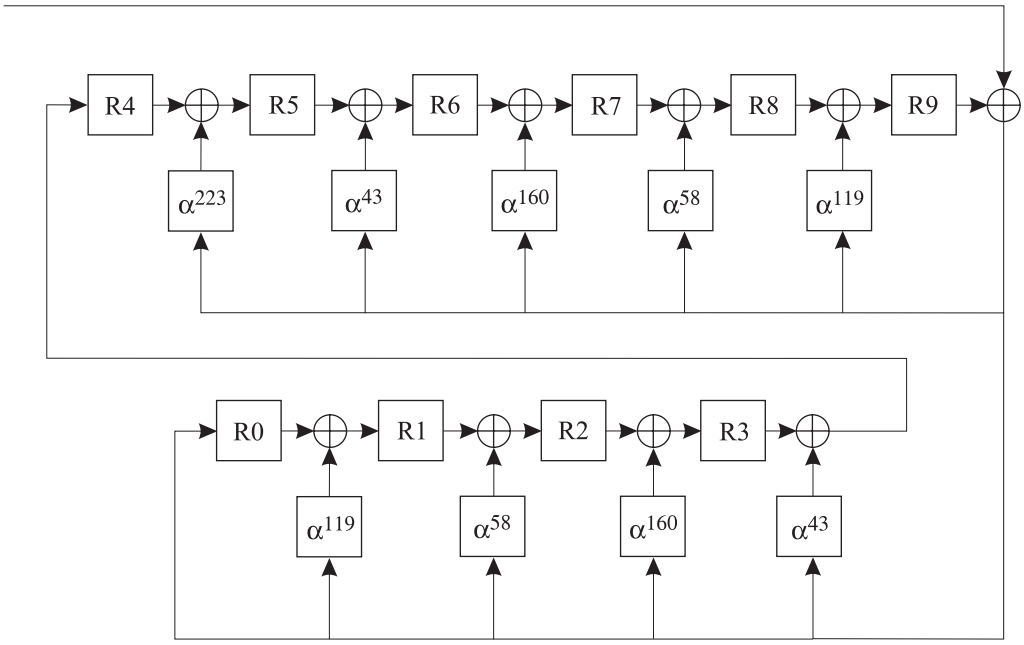

Figure 38 - C2 ECC

13.6.4 Codeword Pair designation

An ECC Encoded Data Set shall contain 491 520 bytes consisting of 16 64×480-byte ECC Encoded Sub Data Sets. Each row of each ECC Encoded Sub Data Set shall be a 480-byte ECC Encoded Codeword Pair. Thus there shall be 1 024 ECC Encoded Codeword Pairs per ECC Encoded Data Set.

Table 22 shows how the designations for the 1 024 Codeword Pairs shall be allocated from the 16 Sub Data Sets and the row number within the Sub Data Set.

Table 22 - Codeword Pair Designation

Row within Sub Data Set	Sub Data Set Number															
	0	**1**	**2**	**3**	**4**	**5**	**6**	**7**	**8**	**9**	**10**	**11**	**12**	**13**	**14**	**15**
0	0	1	2	3	4	5	6	7	8	9	10	11	12	13	14	15
1	16	17	18	19	20	21	22	23	24	25	26	27	28	29	30	31
2	32	33	34	35	36	37	38	39	40	41	42	43	44	45	46	47
.	.	.	.	.	.	.	.	.	.	.	.	.	.	.	.	.
.	.	.	.	.	.	.	.	.	.	.	.	.	.	.	.	.
61	976	977	978	979	980	981	982	983	984	985	986	987	988	989	990	991
62	992	993	994	995	996	997	998	999	1000	1001	1002	1003	1004	1005	1006	1007
63	1008	1009	1010	1011	1012	1013	1014	1015	1016	1017	1018	1019	1020	1021	1022	1023

13.7 Codeword Quads (CQ)

Codeword Quads shall be formed by adding header information to two Codeword Pairs. See figure 39.

Each Data Set shall produce 512 Codeword Quads. For each of the 64 rows of the 16 ECC Encoded Sub Data Sets, 8 CQs shall be constructed. One CQ shall be constructed for each pair of Sub Data Sets.

Codeword Pair Header 10 bytes	First Codeword Pair 480 bytes	Codeword Pair Header 10 bytes	Second Codeword Pair 480 bytes

Figure 39 - Codeword Quad

Copyright International Organization for Standardization
Reproduced by IHS under license with ISO
No reproduction or networking permitted without license from IHS
Not for Resale
© ISO/IEC 2002 – All rights reserved

13.7.1 Codeword Pair Header

A 10-byte Codeword Pair Header shall prefix each Codeword Pair. The Codeword Pair Header shall contain the information shown in table 23.

Table 23 - Codeword Pair Header

Byte positions	Length in bytes	Name of the field
0	2	Codeword Identifier
2	4	Write Pass
6	2	Absolute CQ Sequence Number
8	2	Header Parity

13.7.1.1 Codeword Identifier

The Codeword Identifier shall uniquely identify the Codeword Pair and Codeword Quad set to which it belongs. The Codeword Identifier shall contain 4 sub-fields as shown in table 24.

Table 24 - Codeword Identifier

Byte 0								Byte 1							
7			4	3	2	1	0	7							0
Data Set Id Fragment				AF	Res	Codeword Pair Designation									

- Byte 0, bit 7-4. Data Set Id Fragment. Shall contain the 4 least significant bits of the Data Set Number.
- Byte 0, bit 3. Amble Flag (AF). Shall be set to ONE if the CQ is an Amble CQ, and ZERO if the CQ is a Data CQ. See 15.6.
- Byte 0, bit 2. Shall be set to ZERO.
- Byte 0, bits 0 and 1
  If the CQ is an Amble CQ then these bits shall be set to ZEROs
  If the CQ is not an Amble CQ then these bits shall be set to the 2 most significant bits of the Codeword Pair Designation.
- Byte 1
  If the CQ is an Amble CQ then these bits shall all be set to ZEROs.
  If the CQ is not an Amble CQ then these bits shall be set to the 8 least significant bits of the Codeword Pair Designation.

13.7.1.2 Write Pass Identifier

This field shall identify the write pass on which the Data Set was written. The content of this field shall be the same as the Tape Write Pass value in the DSIT for the Data Set to which the Codeword Pairs belong, except following a Servo Tracking Fault as described in 15.10.

13.7.1.3 Absolute CQ Sequence Number (ACN)

Each CQ Set shall have an Absolute CQ Sequence Number (ACN) between 0 and 65 535. This number shall be one greater than the ACN of the CQ Set written immediately before it on tape, or shall be ZERO if the previously written ACN is 65 535. The ACN shall be the same in all Codeword Pair Headers in the CQ Set.

The ACN of the first CQ Set written on a wrap shall be ZERO.

When appending to the tape, the ACN of the first CQ Set written at the append point shall be between 8 and 24 greater mod(65 536) than the last CQ Set written in the Data Set before the append point.

© ISO/IEC 2002 – All rights reserved
Copyright International Organization for Standardization
Reproduced by IHS under license with ISO
No reproduction or networking permitted without license from IHS
Not for Resale

13.7.1.4 Header Parity

The Header Parity shall be a Reed-Solomon code over GF (256).

Calculation in a GF (256) shall be defined by

$P(x) = x^8 + x^4 + x^3 + x^2 + 1$

A primitive element α in GF (256) shall be

$\alpha = (0 \quad 0 \quad 0 \quad 0 \quad 0 \quad 0 \quad 1 \quad 0)$

The generator polynomial shall be

$G(x) = (x + \alpha^{127})(x + \alpha^{128})$

$= x^2 \oplus \alpha^{152} x \oplus 1$

The CRC bytes shall be generated by processing the requisite bytes through a generator circuit whose registers shall be set to (00) prior to beginning processing. See figure 40. Registers R0 and R1 shall be 8 bits wide. Data bytes shall be fed sequentially into the encoder. After the requisite bytes have been processed, the content of R1 is CRC1 and that of R0 is CRC0. CRC1 shall be the first byte in the header, and CRC0 shall be the second byte in the header.

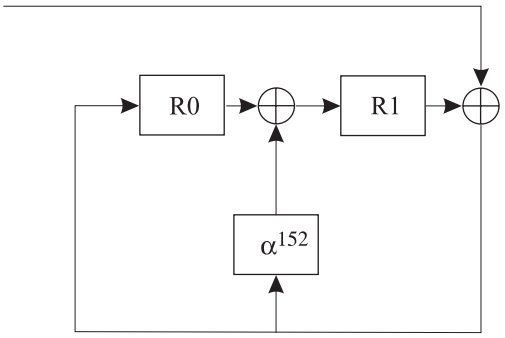

Figure 40 - Header Parity

13.7.2 First Codeword Pair

The first Codeword Pair for the CQ shall be selected from the Sub Data Set and row of the Sub Data Set as indicated in table 25, beginning with Sub Data Set 0 and row number 0.

Table 25 - First Codeword Pair

Row within Sub Data Set	Sub Data Set Number							
	0	**2**	**4**	**6**	**8**	**10**	**12**	**14**
0	0	1	2	3	4	5	6	7
1	8	9	10	11	12	13	14	15
2	16	17	18	19	20	21	22	23
. **.**	. .	. .	. .	. .	. .	. .	. .	. .
61	488	489	490	491	492	493	494	495
62	496	497	498	499	500	501	502	503
63	504	505	506	507	508	509	510	511

13.7.3 Second Codeword Pair

The second Codeword Pair for the CQ shall be selected from the Sub Data Set and row of the Sub Data Set as indicated in table 26, beginning with Sub Data Set 1 and row number 0.

Copyright International Organization for Standardization
Reproduced by IHS under license with ISO
No reproduction or networking permitted without license from IHS
Not for Resale
© ISO/IEC 2002 – All rights reserved

Table 26 - Second Codeword Pair

Row within Sub Data Set	Sub Data Set Number							
	1	**3**	**5**	**7**	**9**	**11**	**13**	**15**
0	0	1	2	3	4	5	6	7
1	8	9	10	11	12	13	14	15
2	16	17	18	19	20	21	22	23
.	.	.	.	.	.	.	.	.
.	.	.	.	.	.	.	.	.
61	488	489	490	491	492	493	494	495
62	496	497	498	499	500	501	502	503
63	504	505	506	507	508	509	510	511

13.8 Allocation of CQs to Logical Tracks

CQs shall be written simultaneously onto the tape in sets of 8 CQs, where 8 is the number of concurrent active tracks. One CQ of each set shall be written to each of the 8 tracks. Tracks are numbered 0 to 7, where Logical Tracks 0 to 7 correspond to the physical tracks that are defined to be in the current wrap (see 12.14), in numerically ascending order. Logical Track 0 shall correspond to the lowest numbered physical track in the set. Logical Track 7 shall correspond to the highest numbered physical track in the set. CQ Sets shall be numbered 0 to 63.

The set for a CQ can be found by

$$Set_Number = \frac{CQ_Number - Mod(CQ_Number,8)}{8}$$

The track number to which a CQ is written can be found by

$$Track_Number = Mod(CQ_Number - Set_Number,8)$$

$$Track_Number = Mod\left[CQ_Number - \frac{CQ_Number - Mod(CQ_Number,8)}{8},8 \right]$$

NOTE - The above description does not include the effect of CQ Sets rewritten due to Read-While-Write failures. See 15.5 for the details of rewriting CQ Sets.

This has the effect of presenting the CQs that contain the bytes from any specific Sub Data Set column in a diagonal line across the tape, as shown in figure 41, rather than in a vertical line across the tape. The shaded boxes represent the CQs that contain the bytes from Sub Data Sets 1 and 2. The numbers indicate the number of the CQ given in table 22.

Track 0	0	9	18	27	36	45	54	63	64	73	..	448	457	466	475	484	493	502	511
Track 1	1	10	19	28	37	46	55	56	65	74	..	449	458	467	476	485	494	503	504
Track 2	2	11	20	29	38	47	48	57	66	75	..	450	459	468	477	486	495	496	505
Track 3	3	12	21	30	39	40	49	58	67	76	..	451	460	469	478	487	488	497	506
Track 4	4	13	22	31	32	41	50	59	68	77	..	452	461	470	479	480	489	498	507
Track 5	5	14	23	24	33	42	51	60	69	78	..	453	462	471	472	481	490	499	508
Track 6	6	15	16	25	34	43	52	61	70	79	..	454	463	464	473	482	491	500	509
Track 7	7	8	17	26	35	44	53	62	71	72	..	455	456	465	474	483	492	501	510

Figure 41 - Diagonal C2 Codewords

© ISO/IEC 2002 – All rights reserved
Copyright International Organization for Standardization
Reproduced by IHS under license with ISO
No reproduction or networking permitted without license from IHS
Not for Resale

13.9 Data randomisation

The data stream allocated to each track shall pass through a data randomiser. The randomisation algorithm shall be preset at the beginning of every Codeword Pair Header.

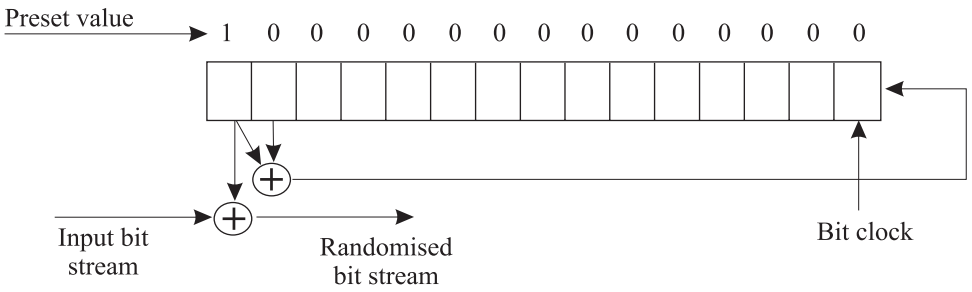

Figure 42 - Randomisation shift register

For each byte of the Codeword Pair Header and data, the most significant bit, i.e. bit 7, shall be input first. The logical operators are Exclusive OR's. The result of this operation is a randomised bit stream.

13.10 RLL encoding

The randomised bit streams shall each pass through a (1,7) RLL modulation encoder. RLL encoding shall start with bits 7 to 4 of the first randomised byte of each Codeword Pair Header, followed by bits 3 to 0 of the first byte, and all subsequent bytes, most significant bits first.

The encoder shall operate at rate 4:6 (i.e. 4 user bits to 6 Channel bits), and shall be as shown in table 27.

Table 27 - RLL Encoder

	Current State													
	1		2		3		4		5		6		7	
Data In	Data Out	Next State	Data Out	Next State	Data Out	Next State	Data Out	Next State	Data Out	Next State	Data Out	Next State	Data Out	Next State
0000	000000	4	000000	4	000101	6	100101	6	101010	4	001000	4	010101	6
0001	000000	5	000000	5	000101	1	100101	1	101010	2	001000	5	010101	1
0010	000000	7	101000	6	000101	3	100101	3	101000	6	001000	6	010101	3
0011	010100	3	101000	7	000100	3	100100	3	101000	7	001000	7	010100	3
0100	010100	4	100000	4	000100	4	100100	4	100000	4	010000	4	010100	4
0101	010100	5	100000	5	000100	5	100100	5	100000	5	010000	5	010100	5
0110	010100	6	100000	6	000100	6	100100	6	100000	6	010000	6	010100	6
0111	010100	7	100000	7	000100	7	100100	7	100000	7	010000	7	010100	7
1000	010001	6	101001	6	000001	6	100001	6	101001	6	001001	6	010001	6
1001	010001	1	101001	1	000001	1	100001	1	101001	1	001001	1	010001	1
1010	010001	3	101001	3	000001	3	100001	3	101001	3	001001	3	010001	3
1011	010010	3	101010	3	000010	3	100010	3	101010	3	001010	3	010010	3
1100	010010	4	101000	4	000010	4	100010	4	101000	4	001010	4	010010	4
1101	010010	2	101000	5	000010	2	100010	2	101000	5	001010	2	010010	2
1110	010010	6	101010	6	000010	6	100010	6	101010	6	001010	6	010010	6
1111	010010	7	101010	7	000010	7	100010	7	101010	7	001010	7	010010	7

Copyright International Organization for Standardization
Reproduced by IHS under license with ISO
No reproduction or networking permitted without license from IHS
Not for Resale
© ISO/IEC 2002 – All rights reserved

In this table the rows shall be indexed by the 16 possible data input values, and the columns shall be indexed by the 7 current states of the encoder. For each combination of input data, and current state, the table shows the output data, and the resultant state. For each Data Out value, the most significant bit, i.e. bit 5, shall be output first. The result of this operation is an RLL encoded bit stream.

The RLL encoder shall be placed into state 7 prior to encoding every Codeword Pair Header.

14 Recording of data on tape

The synchronised bit stream written to each data track shall be formed by adding synchronising information to the RLL encoded bit stream. The synchronised bit stream shall then be processed by a write equalisation algorithm.

14.1 Synchronised Data Set

Synchronisation information shall be added to the RLL encoded bit streams prior to being processed by write equalisation and being written onto the individual tracks of the tape. The layout of the Synchronised Data Set for each recorded track shall be as shown in figure 43.

	DSS	VFO1	SCQ	VFO2	SCQ	…	VFO2	SCQ	VFO1	DSS	

Figure 43 - Synchronised Data Set layout on tape

14.1.1 Data Set Separator (DSS)

The Data Set Separator shall be written before each Data Set recorded on tape, and after the last Data Set written on each wrap.

The Data Set Separator shall consist of the repeated binary pattern 100 000 000. The length of the Data Set Separator is variable.

14.1.1.1 Long DSS

The Long DSS shall be up to 3 200 000 occurrences of the 9-bit binary pattern in length. A Long DSS shall be written for the following conditions:

– the DSS preceding the first Data Set written after a Servo Tracking Error (See 15.10 for minimum length)

– the first DSS written on the tape at each Beginning of Wrap (See 15.7 for minimum length)

– the last DSS written on the tape at each End of Wrap (See 15.8 for minimum length)

14.1.1.2 Extended DSS

The Extended DSS shall be between 8 000 and 160 000 occurrences of the 9-bit binary pattern in length. An Extended DSS shall be written for any of the following conditions:

– after the FID

– before the EOD Data Set

– after the EOD Data Set

– before the first CQ of an appended Data Set

14.1.1.3 Short DSS

The Short DSS shall be between 80 and 800 occurrences of the 9-bit binary pattern in length. A Short DSS shall be written for either of the following conditions:

– between Data Sets when the Data Sets are written during streaming operations

– between any CQs when the Data Set Number of the second CQ Set is greater than that of the Data Set Number of the first CQ Set

© ISO/IEC 2002 – All rights reserved
Copyright International Organization for Standardization
Reproduced by IHS under license with ISO
No reproduction or networking permitted without license from IHS
Not for Resale

14.1.2 VFO Field 1

VFO Field 1 shall consist of the bit sequence 000010 followed by 59 occurrences of the bit sequence 101010. The VFO bits shall not be RLL encoded. VFO Field 1 shall be written immediately after the preceding Data Set Separator and immediately before the following Data Set Separator.

14.1.3 VFO Field 2

VFO Field 2 shall consist of the bit sequence 000010 followed by 27 occurrences of the bit sequence 101010. The VFO bits shall not be RLL encoded. VFO Field 2 shall be written between adjacent CQs in the Data Set.

14.1.4 Synchronised Codeword Quad (SCQ)

Synchronised Codeword Quads (SCQ) shall be formed by inserting synchronisation patterns into the RLL encoded CQ byte stream. See figure 44.

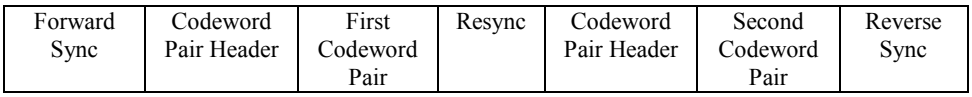

Figure 44 - Synchronised Codeword Quad

14.1.4.1 Forward Sync

The Forward Sync pattern shall consist of the bit pattern 1010 0001 0010 1001 0001 0100.

14.1.4.2 Resync

The Resync pattern shall be a unique bit pattern that cannot be generated normally using the RLL encoding scheme. The Resync shall be a function of the RLL Encoder state preceding the Resync.

Table 28 - Resync

Preceding RLL Encoder State(s)	Resync
1, 7	010010 000000 010101 010101
2, 5	101010 000000 010101 010101
3	000010 000000 010101 010101
4	100010 000000 010101 010101
6	001010 000000 010101 010101

14.1.4.3 Reverse Sync

The Reverse Sync shall be a function of the RLL Encoder state preceding the Reverse Sync.

Table 29 - Reverse Sync

Preceding RLL Encoder State(s)	Reverse Sync
1, 7	010010 001010 001001 010010
2, 5	101010 001010 001001 010010
3	000010 001010 001001 010010
4	100010 001010 001001 010010
6	001010 001010 001001 010010

Copyright International Organization for Standardization
Reproduced by IHS under license with ISO
No reproduction or networking permitted without license from IHS
Not for Resale
© ISO/IEC 2002 – All rights reserved

14.2 Write equalisation bit encoding

The Synchronised Data Set for each track, the synchronised bit stream, shall be treated as a continuous stream of bits. Each bit in the synchronised bit stream shall be write equalisation encoded according to table 30 and shall be written on the tape as five consecutive write equalisation cells, the most significant cell shall be written first. The encoder shall operate at rate 1:5, i.e. each bit in the synchronised bit stream shall produce 5 write equalisation cells.

Table 30 - Write Equaliser Encoder Table

Current State	Data In = 0		Data In = 1	
	Data Out	Next State	Data Out	Next State
0	00000	1	-	-
1	00110	1	00000	2
2	11111	3	-	-
3	11001	3	11111	0

In this table the rows shall be indexed by the 4 current states of the encoder, and the columns shall be indexed by the 2 possible input bit values. For each combination of input bit and current state, the table shows the output write equalisation cells, and the next state.

The Write Equalisation encoder shall be placed into state 1 at the beginning of every write operation.

14.3 Writing cells on tape

The recording method shall be such that a flux transition is written to tape when there is a change in the data contained in adjacent write equalisation cells.

15 Regions on tape

15.1 Logical Points and regions

The tape shall be divided into seven regions. The boundaries of the regions shall be marked by eight Logical Points. The Logical Points shall be

Table 31 - Logical Points

Logical Point	Description
LP0	The physical beginning of the leader tape at the leader pin.
LP1	The point at which the Servo detection shall commence. The Servo Bands shall be valid between this point and the LP6 point.
LP2	The start of the Calibration Region.
LP3	The start of the User Data Region.
LP4	The current end of the User Data Region.
LP5	The maximum end of the User Data Region.
LP6	The point at which the Servo detection shall commence in the reverse direction. The Servo Bands shall be valid between this point and the LP1 point.
LP7	The physical end of tape.

© ISO/IEC 2002 – All rights reserved
Copyright International Organization for Standardization
Reproduced by IHS under license with ISO
No reproduction or networking permitted without license from IHS
Not for Resale

The regions of the tape as bound by the Logical Points shall be

Table 32 - Regions of tape

Region	Usage
LP0 – LP1	Unused
LP1 – LP2	Forward Servo Acquisition Region
LP2 – LP3	Calibration Region
LP3 – LP4	User Data Region
LP4 – LP5	Unused Data Area (may have zero length)
LP5 – LP6	Reverse Servo Acquisition Region
LP6 – LP7	Unused

Logical Points 1 to 6 shall be defined in terms of absolute location down the length of tape recorded in the servo frames, and encoded in LPOS words as defined in 11.3.2.

– LP1 shall be located 7,0 m ± 0,1 m from LP0.

– LP2 shall be located at LP1 + 694 LPOS words (approximately 5 m).

– LP3 shall be located at LP2 + 833 LPOS words (approximately 6 m).

– LP6 shall be located at LP5 + 694 LPOS words (approximately 5 m).

– LP5 shall be located at LP3 + Max User Data LPOS words.

– LP4 shall be located no closer to LP0 than LP3 + 6 944 LPOS words (approximately 50 m) and no closer to LP7 than LP5.

Table 33 – Max User Data LPOS counts

Cartridge Type	Max_User_Data	Approximate Length (m)
A	80 556	580
B	40 278	290
C	24 167	174
D	8 056	58

Copyright International Organization for Standardization
Reproduced by IHS under license with ISO
No reproduction or networking permitted without license from IHS
Not for Resale
© ISO/IEC 2002 – All rights reserved

Figure 45 illustrates the locations of the Logical Points and the regions created thereby.

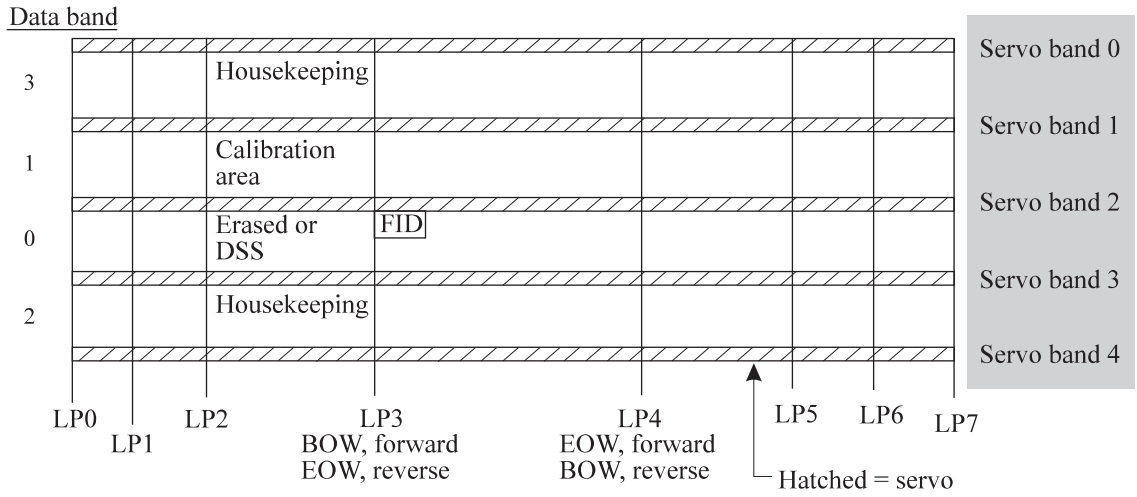

Figure 45 - Tape regions

15.2 Calibration Region

The area between LP2 and LP3 shall be reserved for calibration and the storage of Housekeeping Data Sets. No user data shall be recorded in this area. The Calibration Region may be used for the following purposes:

– Servo and Read/Write calibration and tuning;

– Storage of Housekeeping Data Sets.

The information that can appear in the Calibration and Housekeeping Area depends on the Servo bands between which it shall be written as follows:

– Between Servo Bands 0 and 1: Housekeeping Data Sets;

– Between Servo Bands 1 and 2: Servo and Read/Write Calibration;

– Between Servo Bands 2 and 3: Erased or DSS;

– Between Servo Bands 3 and 4: Housekeeping Data Sets.

The format of the Housekeeping Data Sets shall conform to the requirements of this International Standard.

The content of the Calibration Region is not specified by this International Standard and shall be ignored in interchange.

15.3 User Data Region

The User Data Region shall contain the FID, the User Data Sets, and the EOD Data Set. Housekeeping Data Sets shall not occur within the User Data Region.

The number of Data Sets written within a wrap shall be dependent upon the number of CQ Sets which have been rewritten due to errors encountered during the write process, and the number and length of DSS written. The number of Data Sets written within a wrap is not specified.

15.4 Interrupted Data Sets

When writing is interrupted for any reason (e.g. Servo Tracking Fault), then any Data Set for which all the CQ Sets have not been successfully recorded and subsequently verified shall be considered to be an Interrupted Data Set. Data Sets so interrupted shall be rewritten in their entirety.

© ISO/IEC 2002 – All rights reserved
Copyright International Organization for Standardization
Reproduced by IHS under license with ISO
No reproduction or networking permitted without license from IHS
Not for Resale

15.5 Repeated CQ Sets

If an error is detected in a CQ Set during Read-While-Write verification, then that CQ Set shall be rewritten farther down the tape. The original CQ Set shall be left on the tape as written. No more than 6 other CQ Sets shall be written between the point at which the error was detected, and where the CQ Set in error is rewritten.

When a CQ Set is repeated due to a Read-While-Write error, the SCQs within the CQ Set shall be rotated around the tracks so that they do not appear on the same track as the last time that they were written.

The Track Number for each CQ in a CQ Set shall be given by the following equation:

$$Track_Number = Mod\left[CQ_Number - \frac{CQ_Number - Mod(CQ_Number, 8)}{8} - W, 8 \right]$$

Where W is an arbitrary, but different, number in the range 0 to 7 between successive writings of the same CQ Set.

An example of such rotation is shown in table 34 in which a number of CQ Sets are rewritten because an error was detected while they were being written. The notation K^x indicates that an error was detected while writing CQ Set K. The notation K' indicates that the CQ Set K was rewritten once. The notation K'' indicates that the CQ Set K was rewritten twice, etc. N is the CQ Set number within the Data Set.

Table 34 - SCQ Allocation to Tracks with RWW Failures

	W	**0**	**0**	**0**	**1**	**1**	**1**	**2**	**2**	**2**	**2**	**3**	**3**	**3**	**3**
Trk	**N**	**0^x**	**1**	**2**	**$0'^x$**	**3^x**	**4**	**0''**	**$3'^x$**	**5**	**6**	**3''**	**7**	**8**	**9**
0		0	9	18	1'	27	36	2''	29'	45	54	30''	63	64	27
1		1	10	19	2'	28	37	3''	30'	46	55	31''	56	65	74
2		2	11	20	3'	29	38	4''	31'	47	48	24''	57	66	75
3	D	3	12	21	4'	30	39	5''	24'	40	49	25''	58	67	76
4	S	4	13	22	5'	31	32	6''	25'	41	50	26''	59	68	77
5	S	5	14	23	6'	24	33	7''	26'	42	51	27''	60	69	78
6		6	15	16	7'	25	34	0''	27'	43	52	28''	61	70	79
7		7	8	17	0'	26	35	1''	28'	44	53	29''	62	71	72

Each CQ Set can be rewritten multiple times. The maximum number of CQ Sets that shall be rewritten within a single Data Set shall be 128.

When a CQ Set is rewritten, any CQ Sets that have been written between the original and the rewritten version do not need to be rewritten unless one of the following conditions apply:

– An error is detected in one of those CQ Sets.

– They have a Data Set Number that is higher than that of the CQ Set that is being rewritten.

NOTE - The Tape Write Pass does not change for rewritten CQ sets.

15.6 Amble CQs

When the last CQ Set of a Data Set is written to tape, there may not be any subsequent Data Set ready to be written to tape. Due to the requirements of the Read-While-Write latency, the writing device cannot determine that the Data Set is complete until the last CQ Set has been verified. In the interval between writing the last CQ Set and it being verified, more CQ Sets must be written.

The writing drive may perform either of the following:

– Repeat CQ Sets from the end of the last Data Set until it has verified that there is a good copy of every CQ in the Data Set.

– Write Amble CQs until the verification is complete.

Copyright International Organization for Standardization
Reproduced by IHS under license with ISO
No reproduction or networking permitted without license from IHS
Not for Resale
© ISO/IEC 2002 – All rights reserved

Amble CQs do not contain user data, and shall be indicated by the Amble Flag in the Codeword Headers being set to ONE. The other fields of the Codeword Header shall be set as follows:

- Codeword Identifier:
  - Data Set ID Fragment: shall contain the 4 least significant bits of the Data Set Identifier of the most recent Data Set.
  - Amble Flag: shall be set to ONE.
  - Codeword Pair Designation: shall contain ZEROs.
- Write Pass Identifier: shall be set to the current Write Pass Identifier.
- ACN: shall be set to the ACN of the previous CQ +1.

All CQs in an Amble CQ Set shall be Amble CQs. Amble and Data CQs shall not be mixed within a CQ set.

When Amble CQs are being written, it may be necessary to rewrite CQs from the end of the Data Set, if the Read-While-Write verification fails. This will result in Amble CQ Sets being interspersed among CQ Sets that contain user data.

Amble CQs shall not be required to be Read-While-Write verified.

15.7 Beginning of Wrap (BOW)

The first Data Set Separator written in any wrap shall be a Long DSS. It shall begin between 0 mm and 100 mm before the BOW point and shall continue at least 100 mm beyond the BOW point.

The first correctly written Data Set on a wrap shall end between 100 mm and 4 m after the BOW point.

15.8 End of Wrap (EOW)

If, when EOW is reached, a Data Set has not been completely written to tape and verified by write error checks, then it shall be considered to be an incomplete Data Set. Incomplete Data Sets shall be rewritten in their entirety on the next available Wrap.

No CQ Sets shall be written past the EOW point. After the last Data Set written a DSS shall be written that starts at least 100 mm before the EOW point and continues for between 0 mm and 100 mm beyond it.

When EOW is reached, the last correctly written Data Set on the wrap shall finish between 100 mm and 4 m before the EOW point.

15.9 Appending and Overwriting

When new data is appended to data already recorded on tape, or existing data is overwritten by new data, the point at which recording may start shall be referenced to the last recorded DSS following the Data Set that the new data is to follow. If repeated CQ Sets have been recorded, the relevant DSS shall be the one after the last rewritten CQ Set that belongs to the Data Set that the new data is to follow (CQ Set A in figure 46).

The smallest unit of appending or overwriting shall be a Data Set.

NOTE - After overwriting commences, all data beyond the current recording point is logically inaccessible.

The rules for appending and overwriting shall be identical. For simplicity, the following description refers only to appending.

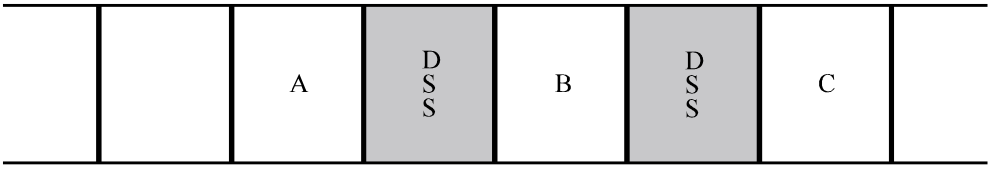

Figure 46 - Appending rules

The CQ Sets, up to and including CQ Set A in figure 46, contain information which is to be retained.

© ISO/IEC 2002 – All rights reserved
Copyright International Organization for Standardization
Reproduced by IHS under license with ISO
No reproduction or networking permitted without license from IHS
Not for Resale

The information in the CQ Sets in B shall be considered to be residual and shall be ignored in interchange. The CQ Sets in B may be incomplete or damaged by the append operation. The number of CQ Sets in B shall not exceed 14, and may be 0.

The append shall start with the new information at CQ Set C after the DSS.

The writing drive shall write an Extended DSS preceding the first of the new CQ Sets at C.

15.10 Servo Tracking Faults

If a defect is detected in the Servo Tracks while recording data, recording shall stop until the validity of the Servo Tracks is re-established.

When the defect no longer affects the tracking, then recording of data can recommence. Once back on track, a Long DSS shall be written, of at least 200 mm, followed by a complete copy of the Data Set with the lowest Data Set number among those that were incomplete when the defect was detected. For the rewritten Data Set, the Tape Write Pass shall be incremented by one, and the new value shall be written into the Codeword Pair headers. This may lead to a mismatch between the Tape Write Pass value held in the DSIT, and the value in the Codeword Pair Headers. The Tape Write Pass values in the DSIT and Codeword Pair Headers for all subsequent Data Sets shall be equal to, or greater than, the value in the Codeword Pair Headers for the rewritten Data Set.

The ACN in the Codeword Pair Headers of the first CQ Set written after the Long DSS shall be 1 greater mod(65 536) than the value in the Codeword Pair Headers of the last CQ Set that was started before the servo defect was detected.

If another Servo Tracking Fault is detected before the Data Set is completed, then the process shall be repeated, and the Tape Write Pass value shall be incremented.

The physical distance between the end of a correctly written Data Set and the end of the subsequent next correctly written Data Set, on the same wrap, shall not exceed 4 m.

If a Servo Tracking Fault occurs just before EOW, then the EOW cannot be dealt with as defined in 15.8. In this case recording shall stop as in other cases.

Copyright International Organization for Standardization
Reproduced by IHS under license with ISO
No reproduction or networking permitted without license from IHS
Not for Resale
© ISO/IEC 2002 – All rights reserved

Annex A
(normative)

Measurement of Bit Shift

In order to measure short term bit cell length, rate of change of short term bit cell length and bit shift, the test read channel shall yield an isolated pulse (step) response which passes through 0 at locations which are $2T_c$ (where T_c is the RLL bit cell time) from the centre of the pulse, and which also causes minimal peak shift. A channel with a step response of $\cos^4(\omega T_c/3)$ meets these requirements.

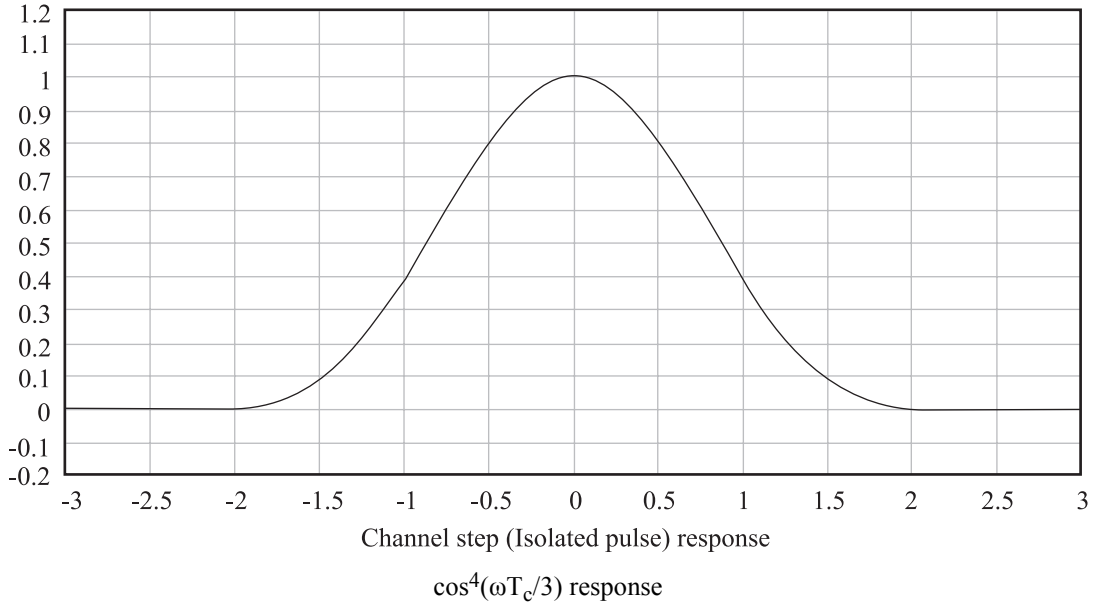

Figure A.1 – Channel step response

BIT SHIFT

Read a tape, which has been recorded with any valid data pattern, using the channel described above. Detect at least 100 000 peaks, ignore all missing pulses (see 10.9). Use an HP E1740A, or equivalent, TIA, and display the histograms of time intervals between detected peaks. Individual histograms are centred at NT_c (where $2 \leq N \leq 8$). Using all intervals ($2 \leq N \leq 8$), calculate the average value of the RLL bit cell, T_c .

In a random (1,7) encoded data stream, there are various environments of intersymbol interference (ISI) for peaks contained in time intervals of $2T_c$. The ISI induced peak shift of a peak contained in a $2T_c$ time interval can be 0 or dT. Hence, a $2T_c$ time interval can be changed due to ISI by one of the following values: (0, dT, 2dT). The frequency of occurrence of each of these values in random (1,7) encoded data is such that the measured mean of the $2T_c$ spacing, $M2T_c$, is given by

$M2T_c = 0{,}457(2T_c+dT) + 0{,}451(2T_c +2dT) + 0{,}092(2T_c+0dT)$

$dT/T_c = (M2T_c-2T_c)/(1{,}36T_c)$

--`,,`-`-`,,`,,`,`,,`---
© ISO/IEC 2002 – All rights reserved
Copyright International Organization for Standardization
Reproduced by IHS under license with ISO
No reproduction or networking permitted without license from IHS
Not for Resale

Annex B
(normative)

Measurement of Broad Band Signal-to-Noise Ratio

B.1 Measurement equipment

The Broad Band Signal-to-Noise Ratio shall be measured using a spectrum analyser with a resolution bandwidth (RB) of less than 30 kHz, a video bandwidth of less than 300 kHz, a sweep time of less than 20 s and a measurement bandwidth (BW) from 0 to 20 MHz. The measurement bandwidth for skirt noise is 2 MHz centred about the signal frequency. Unless otherwise stated, the test conditions shall be those defined in clause 10.

For spectrum analysers with a peak detect function, peak detect shall be ON for signal characterisation and OFF for noise characterisation..

B.2 Measurement procedure

The following procedure shall be used to measure the skirt noise and the Broad Band Signal-to-Noise Ratio.

i. Condition the tape by writing at density TRD1. Then rewind.

ii. Record the tape at density TRD1. The associated fundamental recording frequency is denoted as f_2.

iii. Measure the spectrum (single sweep mode) of the output of the preamp.

iv. The peak signal from this spectrum is S_{tape}.

v. Re-measure the spectrum (single sweep mode, peak detect OFF) of the output of the preamp and save the resultant spectrum SpSkirt.

vi. Using the saved spectrum SpSkirt, define the upper and lower frequencies at which the amplitude drops to 0,03 S_{tape} as f_U and f_L. Define the signal amplitudes associated with these frequencies as A_U and A_L respectively.

vii. Using the saved spectrum SpSkirt, calculate the square root of the sum of the squares of the spectrum over the frequency ranges f_2 - 1 MHz to f_L and f_U to f_2 + 1 MHz. Define this value as Est.

viii. Calculate the square root of the sum of the squares of the spectrum over the frequency range f_2 - 1 MHz to f_L and f_U to f_2 + 1 MHz using a signal amplitude for the lower range of the average amplitude from f_2 - 1 MHz to f_2 - 0,9 MHz and using a signal amplitude for the upper range of the average amplitude from f_2 + 0,9 MHz to f_2 + 1 MHz. Define this value as Ebns.

ix. Compute SNRsk for this pass, 20 log (S_{tape}/Esn) dB, where

$Esn = SFn(Est^2 - Ebns^2)^{0.5}$
$SFn = [(BW/Nbin)/RB]0.5$
Nbin = number of bins in saved spectrum.

x. Condition the tape by writing at density TRD1. Then rewind.

xi. Record the tape at density TRD2. The associated fundamental recording frequency is denoted as f_1. Equalisation pulses shall be included according to the requirements for write equalisation.

xii. With the spectrum analyser set to Noise Level measurement, measure the noise at a minimum of 8 points across the bandwidth. None of these points shall include any of the power in the written signal fundamental or harmonics or in the skirts around the written signal fundamental or harmonics.

xiii. Calculate the total base noise (TBN) as the square root of the integral of the noise power from 0 MHz to $4f_1$, using only the noise level values measured in the previous step. The power in the signal fundamental or harmonics is not included in the integral.

xiv. Compute $BBSNR_{tape}$ for this pass, 20 log(S_{tape}/TBN).

Copyright International Organization for Standardization
Reproduced by IHS under license with ISO
No reproduction or networking permitted without license from IHS
Not for Resale
© ISO/IEC 2002 – All rights reserved

xv. Steps i to xiv shall be performed a minimum of 5 times. Take the average of these measurements to determine $<BBSNR_{tape}>$ and $<SNRsk_{tape}>$.

xvi. Steps i to xiv shall be performed a minimum of 5 times for the Secondary Standard Reference Tape, to determine $<BBSNR_{MSRT}>$ and $<SNRsk_{MSRT}>$.

xvii. Comparison of these measurements shall meet the requirements given in 10.8.

© ISO/IEC 2002 – All rights reserved
Copyright International Organization for Standardization
Reproduced by IHS under license with ISO
No reproduction or networking permitted without license from IHS
Not for Resale

Annex C
(normative)

Tape Abrasivity Measurement Procedure

C.1 General

Tape abrasivity is the tendency of the magnetic coating to wear the magnetic recording heads.

C.2 Test fixture

Install a clean Alfesil wear bar as shown in figure C.1 on a holding fixture similar to that shown in figure C.2. The test edge facing upward shall be unworn and free of chips or voids greater than 1 μm in size. The radius of the test edge shall not exceed 13 μm.

The wear bar material composition shall be

– Al 5,4 wt %, Si 9,6 wt %, Fe balance

– Heat Treatment: 1 000 °C

– Rockwell C Hardness: 46 ± 1

– Process: Vacuum melt and cast

The surface finish on all four sides shall be to N2, 0,05 μm. The bar shall be square to within 0,05 mm.

NOTE - A possible source of Alfesil wear bars is Vacuum Specialities Inc., 1005 Host Drive, Lake Geneva, WI 53147, USA.

C.3 Procedure

A test piece of tape 580 m in length shall be passed for 100 passes (50 cycles) over a rectangular bar of Alfesil. The bar shall be 4,5 mm ± 0,3 mm square and a minimum of 18 mm long as shown in figure C.1. The tape speed shall be 3,0 m/s, the tension shall be 1,0 N ± 0,1 N and the wrap angle shall be 12°. The wear pattern length shall be measured at three locations across the width of the tape path as shown in figure C.3.

A repeat measurement using the same length of tape and a new edge of the Alfesil bar shall produce the same wear pattern length within 30 % of the original measurement.

Copyright International Organization for Standardization
Reproduced by IHS under license with ISO
No reproduction or networking permitted without license from IHS
Not for Resale
© ISO/IEC 2002 – All rights reserved

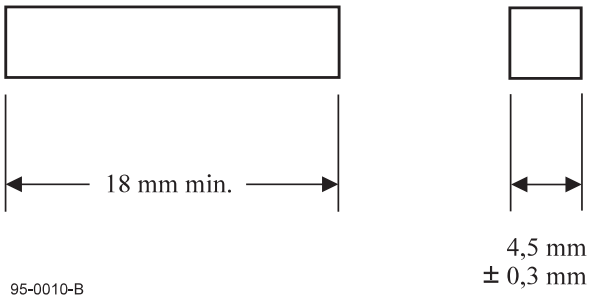

Figure C.1 - Alfesil wear bar

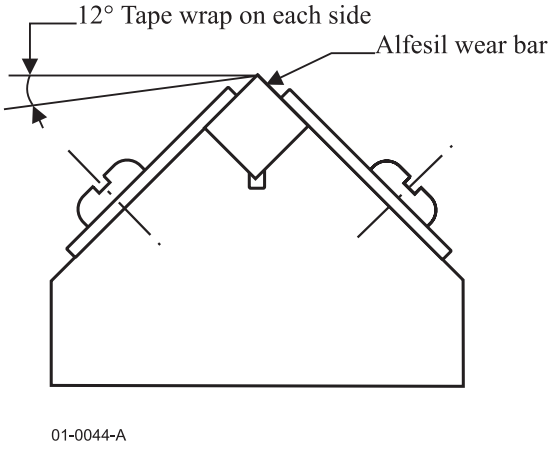

Figure C.2 - Wear bar holding fixture

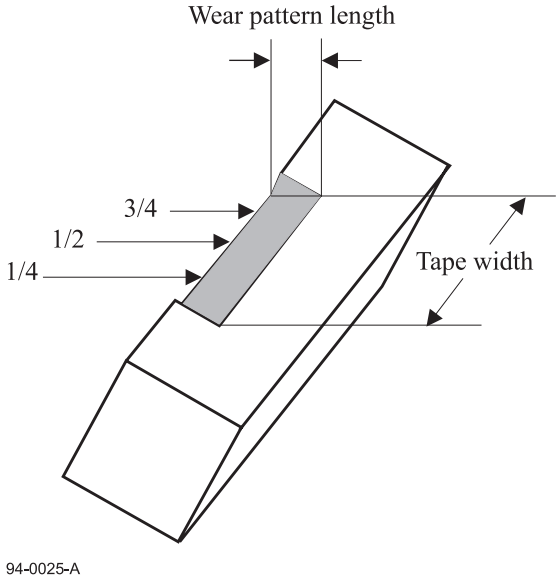

NOTE -The amount of wear is exaggerated for clarity.

Figure C.3 - Wear bar measurement

© ISO/IEC 2002 – All rights reserved
Copyright International Organization for Standardization
Reproduced by IHS under license with ISO
No reproduction or networking permitted without license from IHS
Not for Resale

Annex D
(normative)

LTO Cartridge Memory

D.1 Background

The LTO Cartridge Memory (LTO CM) transponder is built into the case. A contactless interface enables a controller to communicate with the LTO CM transponder.

The LTO CM transponder contains a serial EEPROM whose size is 32 768 bits (4 096 bytes), which is organised into 128 blocks of 32 bytes per block. The LTO CM has writeable units of either a word, which consists of 16 bits (2 bytes), or a block which consists of 256 bits (32 bytes).

Full requirements for the transponder can be found in annex F.

D.2 Contents

There shall be a number of distinct data fields within the LTO CM, as shown in table D.1. The LTO CM has a block access size of 32 bytes, therefore, fields have been arranged to align on 32-byte boundaries where possible. All unused bits in the LTO CM shall be set to ZERO.

The LTO CM content shall be organised into logical regions called Pages. The location of a Page shall be specified by a start address which shall be the number of bytes from address 0. Access to an element within a Page shall be via an offset, in bytes, from the start address.

The LTO CM content shall be accessed by a block address and a word address. See annex F. The conversion from start address and offset in this annex, to LTO CM block address and word address, shall be

Block Address: $B0 = \text{integer part of } [\ (\text{start address} + \text{offset}) \div 32\ ]$

Word Address: $w = \text{mod}(\text{start address} + \text{offset}, 32\ ) \div 2$

Table D.1 - LTO CM Data Fields

Section	Access Restrictions
LTO CM Manufacturer's Information	Read-Only
LTO CM Write-Inhibit	Read-Only
Protected Page Table	Read-Only
Protected Pages	Read-Only
Unprotected Page Table	Restricted Write Capability
Initialisation Page	Restricted Write Capability
Other Unprotected Pages	Read/Write

For an Initialised Cartridge, the Read-Only sections shall be protected from re-programming by the Write-Inhibit Block Number in the LTO CM Write-Inhibit block, D.2.2. The Restricted Write Capability sections shall not be protected against re-programming, but shall be updated only when a field in the Initialisation Page is changed, or an Unprotected Page is added or deleted from the Unprotected Page Table.

Field values shall not roll over past their maximum field value. For example, if the value of a 4-byte field would exceed the value (FFFFFFFF) it shall be set to a maximum value of (FFFFFFFF).

Copyright International Organization for Standardization
Reproduced by IHS under license with ISO
No reproduction or networking permitted without license from IHS
Not for Resale
© ISO/IEC 2002 – All rights reserved

D.2.1 LTO CM Manufacturer's Information

This Page shall contain 32 bytes. This Page shall be required for interchange for both an initialised and uninitialised cartridge. The definitions of uninitialised and initialised cartridge are given in D.2.4.

The LTO CM Manufacturer's Information shall start at address 0 in the LTO CM.

Table D.2 - LTO CM Manufacturer's Information

Field	Offset	Bytes	Description
LTO CM Serial Number	0	4	This field shall contain the Serial Number of LTO CM transponder. See table D.3.
CM Serial Number Check Byte	4	1	This field shall be set to the byte-wise EXOR of the LTO CM Serial Number bytes.
CM Size	5	1	This field shall indicate the size of the LTO CM in units of 1 024 bytes. This shall be set to (04).
Type	6	2	This field shall indicate the type of transponder. This shall be set to (0001).
Manufacturer's Information	8	24	The content of this field is not defined in this International Standard and shall be ignored in interchange.

D.2.1.1 LTO CM Serial Number (bytes 0 -3)

Each LTO CM shall have a unique 32-bit (4 bytes) serial number. The serial number shall be assigned by the LTO CM Manufacturer. Byte 0 shall be the least significant byte and byte 3 shall be the most significant byte and bits 7 to 4 of byte 3 shall uniquely identify the LTO CM manufacturer.

Table D.3 - LTO CM Serial number

Byte 3	Byte 2	Byte 1	Byte 0
MSB			LSB

Table D.4 - LTO CM Manufacturer's identifier

Manufacturer's Identifier				Part of Serial Number			
Bit 7	Bit 6	Bit 5	Bit 4	Bit 3	Bit 2	Bit 1	Bit 0

D.2.2 LTO CM Write-Inhibit

This Page shall contain 4 bytes. The LTO CM Write-Inhibit Page shall start at address 32 in the LTO CM.

© ISO/IEC 2002 – All rights reserved

Copyright International Organization for Standardization
Reproduced by IHS under license with ISO
No reproduction or networking permitted without license from IHS
Not for Resale

Table D.5 - LTO CM Write-Inhibit

Field	Offset	Bytes	Description
Last Write-Inhibited Block Number	0	1	This field shall contain the number of the last 32-byte Block within the LTO CM that is write-inhibited. This shall be set to the start of the Unprotected Page Table on an uninitialised cartridge.
Block 1 Protection Flag	1	1	This field shall indicate whether Block 1 in the LTO CM is write-inhibited. It shall be set to (00) on an uninitialised cartridge, and to (01) on an initialised cartridge. NOTE - Block 1 refers to address range 32 to 63 of the LTO CM, therefore includes this Page itself, and the Protected Page table. Once this flag is set this Page cannot be changed again.
Reserved	2	2	Set to (0000).

The definitions of uninitialised and initialised cartridge are given in D.2.4.

D.2.3 Page Tables

This Page shall contain 4(N+2) bytes, where N is the total number of Pages defined in the Page Table. The following table defines two Page Tables. These are the Protected Page Table and the Unprotected Page Table. Each of these tables shall consist of two or more 4-byte Page Descriptors, followed by a 4-byte CRC. LTO CM Pages may appear in any order, but Page Descriptors shall be arranged in the same order as LTO CM Pages.

The Protected Page Table shall start at address 36 in the LTO CM, and the Unprotected Page Table shall start immediately after the last protected Page.

The Page Table format is defined in table D.6.

Table D.6 - Page Tables

Field	Offset	Bytes	Description
Page Descriptor 0	0	4	Page Descriptor
Page Descriptor 1	4	4	Page Descriptor
. .		. .	
Page Descriptor N	4N	4	End Of Page Table (EOPT) Page Descriptor
CRC	4(N+1)	4	CRC generated over all Bytes from 0 to (4(N+1))-1 of this Page Table. See 13.2 for details of the CRC algorithm.

The format of the Page Descriptors is defined in table D.7.

Table D.7 - Page Descriptor format

Byte 0		Byte 1	Byte 2	Byte 3
7 6 5 4 3 2 1 0		7 6 5 4 3 2 1 0	7 6 5 4 3 2 1 0	7 6 5 4 3 2 1 0
Page Version	Page Id (msb)	(lsb)	Starting Address (MSB)	Starting Address (LSB)

Page Version: This field shall be set to 0000 for all LTO CM Pages.

Copyright International Organization for Standardization
Reproduced by IHS under license with ISO
No reproduction or networking permitted without license from IHS
Not for Resale
© ISO/IEC 2002 – All rights reserved

Page Id: This 12-bit field shall be set to one of the Page Ids defined in D.2.4.

Starting Address: This field shall be set to the absolute starting address, in bytes, of the associated LTO CM Page. Since unused areas are not allowed between Pages, the length of each Page may be determined by subtracting the Starting Address of its Page Descriptor from the Starting Address of the next Page Descriptor.

Each Page in the LTO CM shall be aligned according to the following rules:

– The Protected Page Table shall start at Address 36;

– The Tape Directory Page and the Tape Write Pass Page shall start on 16-byte boundaries;

– Pad Pages shall start immediately after the preceding Page, and shall occupy enough bytes to enable the other rules to apply for the subsequent Page;

– All other Pages shall start on a 32-byte boundary.

Each Page Table may contain one or more Empty Page Descriptors following the last non-Empty Page Descriptor and before the EOPT Page Descriptor. An Empty Page Descriptor shall have its Page Version set to 0000, its Page Id set to (FFE), and its Starting Address set to the same value as that of the Starting Address field of the EOPT Page Descriptor in that Page Table. These descriptors may be used to reserve space in a Descriptor Table to add more descriptors without having to move any of the following Pages, and shall be used to pad the Page Table out so that the subsequent Page starts on a 32-byte boundary.

An End Of Page Table (EOPT) Page Descriptor shall be the last entry in each Page Table, prior to the CRC. Its Page Version shall be set to 0000, and its Page Id shall be set to (FFF). Its Starting Address shall be greater by 1 than the address of the last byte of the last LTO CM Page defined in the table. For the Protected Page Table, this value indicates the beginning of the Unprotected Page Table.

D.2.4 Page Definitions

In the following definitions, a cartridge is defined as initialised if it contains a valid FID Data Set, and uninitialised if it does not. In order to be considered compatible for interchange, an uninitialised cartridge shall have valid Protected and Unprotected Page Tables, and certain LTO CM Pages, so that it may be distinguished from a failed cartridge. The unprotected Page Table of an uninitialised cartridge shall contain only Empty, EOPT Page Descriptors.

In the following tables, the R/O field defines which LTO CM Pages, and fields within Pages, shall be required for interchange, where:

– RU specifies that a Page or a Field shall be required for both uninitialised and initialised cartridges.

– RI specifies that a Page or a Field shall be required for an initialised cartridge only.

– specifies that a Page or a Field is optional.

The Protected field shall indicate whether a Page may be located in the Protected (P), Unprotected (U), or either (PU) Page Table. If a Page is optional, and is present, then all fields in that Page shall be present. Unless otherwise specified, optional fields shall be set to valid data, or to all ZEROs to indicate that valid data is not available.

© ISO/IEC 2002 – All rights reserved
Copyright International Organization for Standardization
Reproduced by IHS under license with ISO
No reproduction or networking permitted without license from IHS
Not for Resale

Table D.8 - Page definitions

Name	P/U	R/O	Page Id	Length (Bytes)	Description
Cartridge Manufacturer's Information	P	RU	(001)	64	
Media Manufacturer's Information	P	O	(002)	64	
Initialisation Data	U	RI	(101)	64	
Tape Write Pass	U	RI	(102)	48	
Tape Directory	U	RI	(103)	1552	
EOD Information	U	RI	(104)	64	
Cartridge Status and Tape Alert Flags	U	RI	(105)	32	
Mechanism Related	U	O	(106)	384	
Suspended Append Writes	U	RI	(107)	128	
Usage Information 0 Usage Information 1 Usage Information 2 Usage Information 3	U	O	(108) (109) (10A) (10B)	64	Table shall contain 0 or 4 consecutive Usage Information Pages.
Application Specific	U	O	(200)	1056	
Pad	PU	O	(FFC)	-	Used to reserve space for future Pages, and to align some Pages to 16-byte and 32-byte boundaries.
Defect	PU	O	(FFD)	-	Used to indicate that the LTO CM contains defective memory locations in that area.
Empty	PU	O	(FFE)	0	Indicates an empty table.
EOPT	PU	RU	(FFF)	0	End Of Page Table.

D.2.5 Common Pages

D.2.5.1 Pad Page

This Page may be used to reserve space for future Pages, or to align some Pages to 32-byte boundaries. This page shall contain N bytes, where N is the size, in bytes, of the Pad Page.

Table D.9 - Pad Page

Field	Offset	Bytes	Description
Pad	0	N	All bytes shall be set to (00).

D.2.5.2 Defect Page

This Page shall contain N bytes, where N is the number of bytes of space for the defective memory locations.

Copyright International Organization for Standardization
Reproduced by IHS under license with ISO
No reproduction or networking permitted without license from IHS
Not for Resale
© ISO/IEC 2002 – All rights reserved

Table D.10 - Defect Page

Field	Offset	Bytes	Description
Defective	0	N	The content of this field is not defined in this International Standard and shall be ignored in interchange.

D.2.6 Protected Pages

D.2.6.1 Cartridge Manufacturer's Information

This Page shall contain 64 bytes.

Table D.11 - Cartridge Manufacturer's Information

Field	R/O	Offset	Bytes	Description
Page Id	RU	0	2	This field shall be set to (0001) indicating the Cartridge Manufacturer's Information Page.
Page Length	RU	2	2	This field shall be set to (0040) which indicates the length of this Page.
Cartridge Manufacturer	O	4	8	This field shall contain an alphanumeric string identifying the manufacturer of the cartridge (based on the Vendor Ids defined in annex I).
Serial Number	O	12	10	This field shall contain an alphanumeric string. This field shall contain the serial number of the cartridge, and shall be assigned by the cartridge manufacturer.
Cartridge Type	RU	22	2	This field shall indicate the type of tape that is contained within the Cartridge. It is constructed as 16 1-bit fields, where only specific bits are checked to verify compliance with this format. – Byte 0, bit 7. Cleaning Cartridge. This bit shall be set to ONE if the cartridge contains tape that is used for cleaning purposes. This bit shall be set to ZERO if the cartridge does not contain tape that is used for cleaning purposes. – Byte 0, bits 6 to 0. These bits shall be set to ZEROs. – Byte 1, bits 7 to 1. These bits shall be set to ZEROs. Byte 1, bit 0. This bit shall be set to ONE if the cartridge contains tape that can be used for the recording and reading of data in the format defined by this International Standard, or if it contains tape that is used for cleaning purposes. This bit shall be set to ZERO if neither of the above conditions are met.
Date of Manufacture	O	24	8	This field shall contain an alphanumeric string identifying the date on which the cartridge LTO CM was initially programmed. The format of this string shall be YYYYMMDD. (YYYY is the year, MM is the month, and DD is the day of the month.)

© ISO/IEC 2002 – All rights reserved
Copyright International Organization for Standardization
Reproduced by IHS under license with ISO
No reproduction or networking permitted without license from IHS
Not for Resale

Field	R/O	Offset	Bytes	Description
Tape Length	RU	32	2	This field shall contain the nominal length of the tape in the cartridge (in units of 0,25 m). The values used for the different cartridge types shall be Type A: 2 436 Type B: 1 276 Type C: 812 Type D: 348
Tape Thickness	RU	34	2	This field shall contain the nominal thickness of the tape, in units of 1/1 024 μm. The value used for this format shall be 9 114.
Empty Reel Inertia	RU	36	2	This field shall contain the nominal empty reel inertia for the cartridge, in units of 1/256 × 10-6 Kg×m2. The value used for this format shall be 7 270.
Hub Radius	RU	38	2	This field shall contain the nominal radius of the hub, in units of 1/1 024 mm. The value used for this format shall be 22 528.
Full Reel Pack Radius	RU	40	2	This field shall be set to the nominal radius of the pack in units of 1/1 024 mm. Values for the tape types shall be Type A: 48 128 Type B: 38 144 Type C: 33 321 Type D: 27 668
Maximum Media Speed	RU	42	2	This field shall identify the maximum speed at which the tape in the cartridge can be used. This shall be defined in units of mm/s. The minimum value that this field shall have is 5 465.
License Code	O	44	4	This field may be used to contain an alphanumeric string that represents a License Code. The format of this information is not defined by this International Standard and is a matter for agreement between interchange parties.
Cartridge Manufacturer's Use	O	48	12	The content of this field is not defined in this International Standard and shall be ignored in interchange.
CRC	RU	60	4	This field shall contain the CRC generated over bytes 0 to 59 of the Cartridge Manufacturer information. See 13.2 for details of the CRC algorithm.

Copyright International Organization for Standardization
Reproduced by IHS under license with ISO
No reproduction or networking permitted without license from IHS
Not for Resale
© ISO/IEC 2002 – All rights reserved

D.2.6.2 Media Manufacturer's Information

This Page shall contain 64 bytes.

Table D.12 - Media Manufacturer's Information

Field	R/O	Offset	Bytes	Description
Page Id	RU	0	2	This field shall be set to (0002) indicating the Media Manufacturer's Information Page.
Page Length	RU	2	2	This field shall be set to (0040) which indicates the length of this Page.
Servowriter Manufacturer	RI	4	48	This field shall be set to the alphanumeric string located in the Manufacturer's Word, encoded in the Servo track, see 11.3.3.
Reserved	RI	52	8	The content of this field is not defined in this International Standard and shall be ignored in interchange.
CRC	RI	60	4	This field shall contain the CRC generated over bytes 0 to 59 of the Media Manufacturer information. See 13.2 for details of the CRC algorithm.

D.2.7 Unprotected Pages

D.2.7.1 Initialisation Data

This Page shall contain 64 bytes.

Table D.13 - Initialisation Data

Field	R/O	Offset	Bytes	Description
Page Id	RI	0	2	This field shall be set to (0101) indicating the Initialisation Data Page.
Page Length	RI	2	2	This field shall be set to (0040) which indicates the length of this Page.
Initialising Drive Manufacturer	RI	4	8	This field shall contain the Drive Manufacturer Id of the drive that was the last one to write the FID (based on Vendor Ids defined in annex I).
Drive Id	O	12	10	This field shall contain all ZEROs or an identifier as specified by the Manufacturer of the drive that was last one to write the FID.

© ISO/IEC 2002 – All rights reserved
Copyright International Organization for Standardization
Reproduced by IHS under license with ISO
No reproduction or networking permitted without license from IHS
Not for Resale

Field	R/O	Offset	Bytes	Description
Format Type	RI	22	2	This field shall indicate the format of the information written on the tape. It shall be written by the intialising drive. If Byte 0, bit 7 of the Cartridge Type field in the Cartridge Manufacturer's Page is set to ONE, then this field is not defined in this International Standard and shall be ignored in interchange. If Byte 0, bit 7 of the Cartridge Type field in the Cartridge Manufacturer's Page is set to ZERO, then this field shall be set as follows: – Byte 0, bit 7. This bit shall be set to ZERO. – Byte 0, bit 6. This bit shall be set to ZERO. – Byte 0, bits 5 to 0. These bits shall be set to ZERO. – Byte 1, bits 7 to 1. These bits shall be set to ZERO. – Byte 1, bit 0. This bit shall be set to ONE.
LP1 Position	RI	24	4	This field shall specify the LPOS value corresponding to the location of LP1.
LP2 Position	RI	28	4	This field shall specify the LPOS value corresponding to the location of LP2.
LP3 Position	RI	32	4	This field shall specify the LPOS value corresponding to the location of LP3.
LP4 Position	RI	36	4	This field shall specify the LPOS value corresponding to the location of LP4.
LP5 Position	RI	40	4	This field shall specify the LPOS value corresponding to the location of LP5.
LP6 Position	RI	44	4	This field shall specify the LPOS value corresponding to the location of LP6.
Reserved	RI	48	12	These bytes shall all be set to (00).
CRC	RI	60	4	This field shall contain the CRC generated over bytes 0 to 59 of this Page. See 13.2 for details of the CRC algorithm.

Copyright International Organization for Standardization
Reproduced by IHS under license with ISO
No reproduction or networking permitted without license from IHS
Not for Resale
© ISO/IEC 2002 – All rights reserved

D.2.7.2 Cartridge Status and Tape Alert Flags

This Page shall contain 32 bytes.

Table D.14 - Cartridge Status and Tape Alert Flags

Field	R/O	Offset	Bytes	Description
Page Id	RI	0	2	This field shall be set to (0105) indicating the Cartridge Status and Tape Alert Flags Page.
Page Length	RI	2	2	This field shall be set to (0020) which indicates the length of this Page.
Tape Alert Flags	O	4	8	This information is not required for interchange. This field shall be set to all ZEROs when the cartridge is threaded. If used, this field shall be set to the Tape Alert flags as determined by the drive. The Tape Alert flags are numbered from 1 to 64, and shall be mapped so that flag 1 shall be contained in bit 7 of byte 0 of this field, and flag 64 shall be contained in bit 0 of byte 7 of this field.
Thread Count	RI	12	4	This field shall indicate the total number of times that the leader pin has been extracted from the cartridge starting with the instance when the cartridge was first initialised. This field shall be incremented by one each time that the leader pin has been extracted.
Cartridge Status	RI	16	2	This field indicates the status of the cartridge when it was removed from the drive. This field shall be set as follows: (0000): Shall indicate that the cartridge was unloaded normally. (0001): Shall indicate that the cartridge was not unloaded normally but that the drive was not writing at that time. This value shall be set just after the cartridge is loaded into the drive, or after the completion of any write operation. (0002): Shall indicate that the tape in the cartridge was not unloaded normally and that the drive was writing at that time. This value shall be set before the drive starts to write to the tape.
Reserved	RI	18	10	These bytes shall all be set to (00).
CRC	RI	28	4	This field shall contain the CRC generated over bytes 0 to 27 of this Page. See 13.2 for details of the CRC Algorithm.

--`,,`,,`-`-`,,`,,`,`,,`---

© ISO/IEC 2002 – All rights reserved
Copyright International Organization for Standardization
Reproduced by IHS under license with ISO
No reproduction or networking permitted without license from IHS
Not for Resale

D.2.7.3 Usage Information

This Page shall contain 64 bytes per Page, for a total of 256 bytes for the 4 Pages. The Usage Information Page shall be optional. If present, there shall be 4 Usage Information Pages that shall contain information for the last 4 times that the cartridge was threaded. Each instance of the Page is accessed in turn, in the order of ascending Page number. The values in each field shall be cumulative over the lifetime of the cartridge.

When these Pages are initially created, the contents of all the fields (except for the Page Id, Page Length, and CRC fields) shall be set to all ZEROs. The Page Id of the first Page accessed shall be (0108).

Table D.15 - Usage Information

Field	R/O	Offset	Bytes	Description
Page Id	RI	0	2	This field shall be set to (0108) to (010B) indicating the Usage Information Page.
Page Length	RI	2	2	This field shall be set to (0040) which indicates the length of this Page.
Drive Manufacturer	O	4	8	This field shall identify the manufacturer of the drive that last updated this Usage Information Page. See annex I.
Drive Id	O	12	10	This field shall contain all ZEROs or an identifier as specified by the Manufacturer of the drive that last updated this Usage Information Page.
Suspended Writes at Append	RI	22	2	This field shall contain the total number of Servo Tracking Errors (see 15.10) that resulted in a Write at an Append point being suspended. This implies that the suspension occurred before sufficient CQ Sets were written to tape to invalidate the Data Set that was supposed to be overwritten.
Thread Count	RI	24	4	This field shall be set to the same value as contained in the Thread Count in the Cartridge Status and Tape Alert Flags section at the time it was recorded.
Total Data Sets Written	RI	28	8	This field shall specify the total number of Data Sets written to the tape.
Total Data Sets Read	RI	36	8	This field shall specify the total number of Data Sets read from to the tape.
Total Write Retries	RI	44	4	This field shall specify the total number of Write Errors (a failure to finish writing a Data Set due to excessive RWW retries), where a subsequent attempt to write the Data Set succeeded.
Total Read Retries	RI	48	4	This field shall specify the total number of Data Sets that were not successfully read on the first attempt, but which were successfully read subsequently.
Total Unrecovered Write Errors	RI	52	2	This field shall specify the total number of Write Errors that resulted in a backup being terminated.
Total Unrecovered Read Errors	RI	54	2	This field shall specify the total number of Data Sets that were not successfully read on the first, nor on a subsequent attempt to read it.

Copyright International Organization for Standardization
Reproduced by IHS under license with ISO
No reproduction or networking permitted without license from IHS
Not for Resale
© ISO/IEC 2002 – All rights reserved

Field	R/O	Offset	Bytes	Description
Total Number of Suspended Writes	RI	56	2	This field shall specify the total number of Servo Tracking Errors (see 15.10) that resulted in a Write being suspended, and the Data Set being written further down the tape.
Total Number of Fatal Suspended Writes	RI	58	2	This field shall specify the total number of Servo Tracking Errors that resulted in a Write failure. In other words, the drive was unable to write the suspended Data Set further down the tape.
CRC	RI	60	4	This field shall specify the CRC generated over bytes 0 to 59 of this Page. See 13.2 for details of the CRC algorithm.

D.2.7.4 Tape Write Pass

This Page shall contain 48 bytes. The Tape Write Pass value encoded in this page shall be equal to the largest value of Write Pass recorded in any Codeword Pair Header of any Codeword Quads recorded on this tape, as defined in 13.7.1.2.

The sum of the 8 4-byte fields shall equal the Tape Write Pass value. When Tape Write Pass value mod(8) is 0, all 8 4-byte fields shall be set to the same value. Otherwise, Write Pass Fields 0 to N-1 shall be greater by 1 than Write Pass Fields N to 7, where N is equal to the Tape Write Pass value mod(8). This results in each Write Pass Field 0 to 7 being incremented by 1 in turn as the Tape Write Pass value is incremented, which is intended to extend the useful life of this Page within the LTO CM.

This Page does not contain a CRC, since that field would be updated every time Write Pass is updated. The integrity of this Page may be determined by verifying that the 8 fields are set to values consistent with this International Standard.

Mapping for each Write Pass Field to the LTO CM is shown in table D.16.

Table D.16 - Tape Write Pass

Field	R/O	Offset	Bytes	Description
Page Id	RI	0	2	This field shall be set to (0102) indicating the Tape Write Pass Page.
Page Length	RI	2	2	This field shall be set to (0030) which indicates the length of this Page.
Reserved	RI	4	12	These bytes shall all be set to (00).
Write Pass Field 0	RI	16	4	As defined above.
Write Pass Field 1	RI	20	4	
Write Pass Field 2	RI	24	4	
Write Pass Field 3	RI	28	4	
Write Pass Field 4	RI	32	4	
Write Pass Field 5	RI	36	4	
Write Pass Field 6	RI	40	4	
Write Pass Field 7	RI	44	4	

D.2.7.5 Tape Directory

This Page shall contain 16 bytes per wrap section, which is 1 536 bytes for all 96 wrap sections. There shall be a 16-byte entry for each wrap section, where a wrap section shall be defined as one half of a single wrap.

© ISO/IEC 2002 – All rights reserved
Copyright International Organization for Standardization
Reproduced by IHS under license with ISO
No reproduction or networking permitted without license from IHS
Not for Resale

The method of determining the transition point from one wrap section to the next, on the same wrap, shall be based on the LPOS values on the tape. The length of the User Data Area is known in terms of LPOS marks. The ends of all even wrap sections shall be located by the LPOS value calculated to be halfway between LP3 and LP4. The Data Set Id, Record Count, and File Mark Count for an even wrap section shall include information from all data sets started between BOW and this point. The sum of each even wrap section and its next odd wrap section shall exactly match the total number of Records and File Marks on that wrap.

All fields in the Tape Directory Page shall be required for Interchange.

Table D.17 - Tape Directory

Field	R/O	Offset	Bytes	Description
Page Id	RI	0	2	This field shall be set to (0103) indicating the Tape Directory Page.
Page Length	RI	2	2	This field shall be set to (0610) which indicates the length of this Page.
FID Tape Write Pass	O	4	4	The content of this field is not defined by this International Standard and shall be ignored in interchange.
Reserved	RU	8	8	These bytes shall all be set to (00).
Wrap Section 0	RI	16	16	As defined below.
Wrap Section 1	RI	32	16	
:	:	:	:	
Wrap Section 94	RI	1520	16	
Wrap Section 95	RI	1536	16	

The contents of each wrap section shall be as shown in table D.18.

Table D.18 - Wrap Section

Field		Bytes	Description
Per Wrap Section	Data Set Id	4	This field shall specify the Data Set Identity of the last Data Set written in this wrap section. If this wrap section does not contain valid Data Sets, then this field shall be set to (FFFFFFFF).
	Record Count	4	If this Wrap Section is valid, this field shall contain the number of Records that are started in the current Wrap Section. If the Data Set ID of this Wrap Section is (FFFFFFFF) and hence this Wrap Section is invalid, the Record Count field is not defined for interchange.
	File Mark Count	4	If this Wrap Section is valid, this field shall contain the number of File Marks that are within the current Wrap Section. If the Data Set ID of this Wrap Section is (FFFFFFFF) and hence this Wrap Section is invalid, the File Mark Count field is not defined for interchange.
	CRC	4	This field shall specify the CRC generated over bytes 0 to 11 of this section of this wrap section. See 13.2 for details of the CRC algorithm.

Copyright International Organization for Standardization
Reproduced by IHS under license with ISO
No reproduction or networking permitted without license from IHS
Not for Resale
© ISO/IEC 2002 – All rights reserved

The index into the Tape Directory shall be the wrap section number from BOT, starting from 0.

Whenever writing commences in a wrap section, the Data Set Id for that and all subsequent Wrap Sections shall be set to (FFFFFFFF), to mark them as not containing valid Data Sets. As each Wrap Section is completed, its Tape Directory entry shall be updated. When an EOD Data Set is written, and the EOD Information Page is updated, the information for the current Wrap Section shall also be updated, so that the Tape Directory and the EOD information are consistent. If writing recommences at EOD, then the current Wrap Section entry shall be set to (FFFFFFFF) again. This enables the position of EOD to be found with the minimum of searching if, for some reason, the real EOD position is not stored when EOD is written, or if power is lost during writing.

In order to locate the information for a specific wrap section within the Tape Directory, the offset shall be calculated using the following:

Offset = 16(Wrap Section).

The Offset for each element of the information for wrap section N is at

Offset (Data Set Id) = 16N

Offset (Record Count) = 16N + 4

Offset (File Mark Count) = 16N + 8

Offset (CRC) = 16N + 12

D.2.7.6 EOD Information

This Page shall contain 64 bytes.

Table D.19 - EOD Information

Field	R/O	Offset	Bytes	Description
Page Id	RI	0	2	This field shall be set to (0104) indicating the EOD Information Page.
Page Length	RI	2	2	This field shall be set to (0040) which indicates the length of this Page.
Tape Write Pass for last written EOD	RI	4	4	This field shall indicate the current value of the Tape Write Pass.
Thread Count	RI	8	4	This field shall specify the value of the Thread Count field in the Cartridge Status Information when the EOD Data Set was written.
Record count at EOD	RI	12	6	This field shall specify the number of Records that are contained on the tape between BOT and EOD.
File Mark Count at EOD	RI	18	6	This field shall specify the number of File Marks that are contained on the tape between BOT and EOD.
EOD Data Set Number	RI	24	4	This field shall specify the Data Set number of the EOD Data Set.
Wrap Section Number of EOD	RI	28	4	This field shall specify the identification of the wrap section in which EOD is contained.

© ISO/IEC 2002 – All rights reserved
Copyright International Organization for Standardization
Reproduced by IHS under license with ISO
No reproduction or networking permitted without license from IHS
Not for Resale

Field	R/O	Offset	Bytes	Description
Validity of EOD	RI	32	2	This field shall indicate the current status of the information held about EOD. This shall be set to (0000): The position of EOD is unknown. (0001): The information in this area identifies the location of EOD (0002): A Backup was in progress, and so there is no EOD Data Set on tape. The EOD Information Page shall specify details of a Data Set that is known to be at or before the current location on tape. (0003): A Backup has been performed, but the drive failed to write the EOD Data Set to tape correctly. The EOD Information Page shall contain details of the Data Set that caused the Backup to fail.
First CQ Set Number	RI	34	2	This field shall specify the Absolute CQ Set Number (ACN) of the first CQ Set in the EOD Data Set.
Physical Position of EOD	RI	36	4	This field shall specify the LPOS value information at which EOD was written. This shall be a value for a LPOS Mark that lies within, or before, the DSS preceding the EOD Data Set.
Reserved	RI	40	20	These bytes shall be set to all (00).
CRC	RI	60	4	This field shall specify the CRC generated over bytes 0 to 59 of this Page. See 13.2 for details of the CRC algorithm.

Validity of EOD: This shall be set to (0002) when writing starts, and to (0001) when writing ceases (i.e. the Backup is complete) and an EOD Data Set has been written. It shall be set to (0003) if writing fails because a Data Set cannot be written to tape (i.e. the Backup has failed and there is no EOD Data Set on tape).

When writing starts at any point except EOD, the information in the rest of this Page shall be updated to reflect the content and position of the first Data Set being written.

When writing proceeds from one Wrap Section to the next, the information in the rest of this Page shall be updated to reflect the content and position of the first Data Set written to the newly started Wrap Section.

If the reading drive detects that the information in the EOD Information is incorrect, it shall set the Validity of EOD to (00), until the Page is reconstructed correctly.

Copyright International Organization for Standardization
Reproduced by IHS under license with ISO
No reproduction or networking permitted without license from IHS
Not for Resale
© ISO/IEC 2002 – All rights reserved

D.2.7.7 Mechanism Related

This Page shall contain 384 bytes.

Table D.20 - Mechanism Related

Field	R/O	Offset	Bytes	Description
Page Id	RI	0	2	This field shall be set to (0106) indicating the Mechanism Related Page.
Page Length	RI	2	2	This field shall be set to (0180) which indicates the length of this Page.
Drive Manufacturer Identity	RI	4	8	This field shall contain the Drive Manufacturer Id of the drive that was the last one to update this area (based on Vendor Ids defined in annex I).
Mechanism related data	O	12	368	The content of this field is not defined in this International Standard and shall be ignored in interchange.
CRC	RI	380	4	This field shall specify the CRC generated over bytes 0 to 379 of this Page. See 13.2 for details of the CRC algorithm.

D.2.7.8 Application Specific Data

This Page shall contain 1 056 bytes. This information shall be written by the drive on behalf of an application or by a separate LTO CM reader as part of an application.

Table D.21 - Application Specific Data

Field	R/O	Offset	Bytes	Description
Page Id	RI	0	2	This field shall be set to (0200) indicating the Mechanism Related Page.
Page Length	RI	2	2	This field shall be set to (0420) which indicates the length of this Page.
Application Data	O	4	1024	The content of this field is not defined in this International Standard and shall be ignored in interchange.
Reserved	RI	1028	24	These bytes shall be set to all (00).
CRC	RI	1052	4	This field shall specify the CRC generated over bytes 0 to 1051 of this Page. See 13.2 for details of the CRC algorithm.

D.2.7.9 Suspended Append Writes

This Page shall contain 128 bytes. This information shall be written by the writing drive whenever it has to suspend writing at an Append Point. This information indicates that a more recent version of the indicated Data Set may exist on tape up to 4 m beyond the first instance of this Data Set.

© ISO/IEC 2002 – All rights reserved

Copyright International Organization for Standardization
Reproduced by IHS under license with ISO
No reproduction or networking permitted without license from IHS
Not for Resale

Table D.22 - Suspended Append Writes

Field	R/O	Offset	Bytes	Description
Page Id	RU	0	2	This field shall be set to (0107) indicating the Suspended Append Writes Page.
Page Length	RU	2	2	This field shall be set to (0080) which indicates the length of this Page.
Reserved	RU	4	4	These bytes shall be set to all (00).
Suspended Append 0	RU	8	8	As defined below.
:	:	:	:	
Suspended Append 13	RU	112	8	
Reserved	RU	120	4	These bytes shall be set to all (00).
CRC	RU	124	4	This field shall specify the CRC generated over bytes 0 to 123 of this page, see 13.2 for details of the CRC algorithm.

The contents of each Suspended Append field is shown in table D.23.

Table D.23 - Suspended Append

Field		Bytes	Description
Per Suspended Append	Data Set Id	4	This field shall be set to the Data Set Identity of the Data Set that was about to be written when the write was suspended.
	Tape Write Pass	4	This field shall be set to the tape Write Pass that applies to the Data Set that was about to be written, that is, to the Write Pass value that applied to the first attempt to write the Data Set.

The intent of this page is to identify the current positions on tape where a Suspended Write has occurred at an Append Point. When a writing drive fails to write at an append point, and has to write the Data Set further down the tape, then an entry shall be made in this page. The entries shall be sequential as far as the Data Set Identities are concerned. When an entry is made, then all subsequent entries in the table shall be set to all ZEROs. This is because all subsequent Data Sets on tape are no longer valid.

If a suspended write occurs when trying to append over an EOD Data Set, then an entry need not be made in this page. The EOD Information page may be used to determine the validity of any EOD Data Set that is read from tape.

D.2.8 Example LTO CM

The following tables define an example LTO CM implementation in which all of the required and optional tables are included.

Copyright International Organization for Standardization
Reproduced by IHS under license with ISO
No reproduction or networking permitted without license from IHS
Not for Resale
© ISO/IEC 2002 – All rights reserved

Table D.24 - Example LTO CM

Field	Address	Bytes
LTO CM Manufacturer's Information	0	32
LTO CM Write Inhibit	32	4
Protected Page Table	36	28
Cartridge Manufacturer's Information Page	64	64
Media Manufacturer's Information Page	128	64
Unprotected Page Table	192	64
Initialisation Data Page	256	64
Tape Write Pass Page	320	48
Tape Directory Page	368	1552
EOD Information Page	1920	64
Cartridge Status and Tape Alert Flags Page	1984	32
Usage Information page (1)	2016	64
Usage Information page (2)	2080	64
Usage Information page (3)	2144	64
Usage Information page (4)	2208	64
Mechanism Related Page	2272	384
Application Specific Page	2656	1056
Suspended Append Writes Page	3712	128

D.2.8.1 Example Protected Table

This example table has 28 bytes.

Table D.25 - Example Protected Table

Offset	Page Descriptor			Description
	Version	Page Id	Starting Address	
0	0	(001)	64	Cartridge Manufacturer's Information Page
4	0	(002)	128	Media Manufacturer's Information Page
8	0	(FFE)	192	Empty Page
12	0	(FFE)	192	Empty Page
16	0	(FFE)	192	Empty Page
20	0	(FFF)	192	End Of Page Table (EOPT) Page Descriptor
24	CRC			CRC generated over Bytes 0 to 23 of this Page Table

© ISO/IEC 2002 – All rights reserved
Copyright International Organization for Standardization
Reproduced by IHS under license with ISO
No reproduction or networking permitted without license from IHS
Not for Resale

D.2.8.2 Example Unprotected Table

This example table has 64 bytes.

Table D.26 - Example Unprotected Table

Offset	Page Descriptor			Description
	Version	Page Id	Starting Address	
0	0	(101)	256	Initialisation Data Page
4	0	(102)	320	Tape Write Pass Page
8	0	(103)	368	Tape Directory Page
12	0	(104)	1920	EOD Information Page
16	0	(105)	1984	Cartridge Status and Tape Alert Flags Page
20	0	(108)	2016	Usage Information page (1)
24	0	(109)	2080	Usage Information page (2)
28	0	(10A)	2144	Usage Information page (3)
32	0	(10B)	2208	Usage Information page (4)
36	0	(106)	2272	Mechanism Related Page
40	0	(200)	2656	Application Specific Page
44	0	(107)	3712	Suspended Append Writes Page
48	0	(FFE)	3840	Empty Page
52	0	(FFE)	3840	Empty Page
56	0	(FFF)	3840	End of Page Table (EOPT) Page Descriptor
60	CRC			CRC Generated over Bytes 0 to 59 of this Page Table

Copyright International Organization for Standardization
Reproduced by IHS under license with ISO
No reproduction or networking permitted without license from IHS
Not for Resale
© ISO/IEC 2002 – All rights reserved

Annex E
(normative)

Flexural Rigidity Procedure

E.1 Equipment Required

– A balance with a flat stage capable of 1 mg resolution.

– A mounting device to hold a loop of tape.

– A linear positioning device with 1 μm resolution to lower the tape loop against the balance surface.

E.2 Sample Preparation

i. Cut a sample of tape into an 8,0 mm square keeping track of the orientation. The orientation shall be such that the cut edges are parallel to the longitudinal and transverse directions of the tape.

ii. Form a loop of tape by clamping opposite edges of the square sample to a mounting device. The loop shall be clamped such that 1,0 mm along each clamped edge is covered by the clamp resulting in a tear-drop shaped loop with a perimeter of 6,0 mm as shown in figure E.1. The inside surface of the loop shall be the magnetic surface.

iii. Position the loop of tape pointing downward over the balance so that it can be lowered against the balance stage surface.

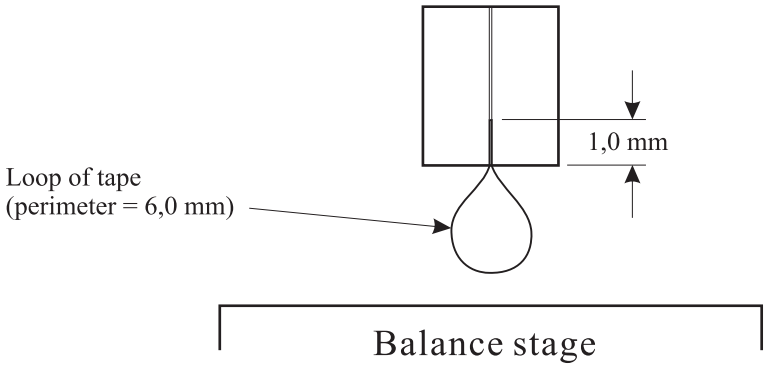

Figure E.1 - Apparatus used to measure tape flexural rigidity

E.3 Measurement Procedure

i. Lower the tape loop until it comes into contact with the microbalance surface.

ii. Record the load (in mg) and the vertical position (in μm).

iii. Lower the loop in 10 μm steps and record the load and vertical position until at least 6 data points have been recorded. If the microbalance design allows surface deflection, the vertical displacement must be corrected for microbalance surface deflection.

E.4 Calculations

i. The plot of load vs. displacement shall be in the linear range of 10 μm to 80 μm. Using a linear regression, calculate the slope of the load vs. displacement curve in units of mg/μm.

ii. The slope of the load vs. displacement curve, in units of mg/μm, shall be a measure of the flexural rigidity.

© ISO/IEC 2002 – All rights reserved
Copyright International Organization for Standardization
Reproduced by IHS under license with ISO
No reproduction or networking permitted without license from IHS
Not for Resale

E.5 Bibliography

William W. Scott and Bharat Bhushan, "Bending Stiffness measurements of magnetic tapes and substrate", Thin Solid Films, 308-309 (1997) pp. 323-328.

--`,,`,,`-`-`,,`,,`,`,,`---

Copyright International Organization for Standardization
Reproduced by IHS under license with ISO
No reproduction or networking permitted without license from IHS

© ISO/IEC 2002 – All rights reserved

Not for Resale

Annex F
(normative)

LTO CM Electrical Interface

F.1 LTO CM electrical interface

The interface between the LTO CM and an external communication device, herein referred to as the LTO CM reader, shall be via a contactless radio frequency interface. This radio frequency shall provide power transfer to the LTO CM, and shall provide read/write access to the LTO CM.

The LTO CM shall appear to the LTO CM reader as an EEPROM containing 4 096 bytes organised as 128 32-byte accessible blocks. Features include 16-bit CRC, parity, anticollision, write-inhibition, single 16-bit word access, and single block access.

References: ISO 14443-2

F.2 Environment

F.2.1 Electromagnetic Compatibility

The LTO CM shall be neither destroyed nor altered after exposure to commonly encountered electromagnetic fields.

F.2.2 Magnetic Fields

The LTO CM shall continue to function normally after exposure to a static magnetic field of 79 500 A/m max.

F.2.3 X-rays

The LTO CM shall not malfunction by exposure of the cartridge, in any orientation, to X-ray radiation, with energy in the range 70 keV to 140 keV, of a cumulative dose of 0,1 Gray per year.

F.3 Operating Field

The Operating Field is generated by the LTO CM reader. The Operating Field shall supply power to the LTO CM, and shall be modulated by both the LTO CM reader and the LTO CM for communication between these devices. The Operating Field characteristics as measured at the LTO CM antenna shall be

- Frequency (f_c) 13 560 kHz ± 7 kHz
- Minimum field (H_{min}) 5 A/m
- Maximum field (H_{max}) 15 A/m

The LTO CM reader shall not generate a field higher than 25 A/m. The LTO CM shall operate as intended continuously between H_{min} and H_{max}.

F.4 Communication from LTO CM reader to LTO CM

- The LTO CM reader shall communicate to the LTO CM by amplitude modulating the Operating Field as described below. The bit coding for commands and data sent from the LTO CM reader to the LTO CM shall be Modified Miller encoding. The bit period shall be 128 cycles of the Operating Field.

Messages from the LTO CM reader to the LTO CM shall comprise a Start Bit, followed by the number of bits in the message, and one Stop Bit. Unmodulated Operating Field shall precede and follow messages between the LTO CM reader and LTO CM.

logic l: Shall comprise 64 cycles of the Operating Field, a Pause Mark (see F.4.1), followed by the number of cycles of the Operating Field required to make the entire logic 1 sequence equal to 128 cycles of the Operating Field.

logic 0: For a logic 0 that follows a logic 1, shall comprise 128 cycles of the Operating Field.

For a logic 0 that follows a logic 0, shall comprise a Pause Mark, followed by the number of cycles of the Operating Field required to make the entire logic 0 sequence equal to 128 cycles of the Operating Field.

© ISO/IEC 2002 – All rights reserved
Copyright International Organization for Standardization
Reproduced by IHS under license with ISO
No reproduction or networking permitted without license from IHS
Not for Resale

Start Bit: Shall comprise a Pause Mark, followed by the number of cycles of the Operating Field required to make the entire Start Bit sequence equal to 128 cycles of the Operating Field.

Stop Bit: Shall be a logic 0.

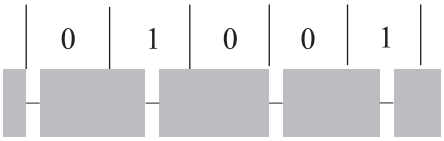

Figure F.1 - Modified Miller encoding

When the LTO CM reader receives any message from the LTO CM, the LTO CM reader shall not transmit any message for a minimum 20,0 μs after the end of the LTO CM transmission.

F.4.1 Pause Mark

The Pause Mark used in LTO CM reader to LTO CM transmission shall have the characteristics indicated in table F.1 and illustrated in figure F.2. The envelope of LTO CM reader shall decrease monotonically to less than 5 % for a period equal to t_2. Any overshoot shall remain within 90 % and 110 % of the nominal Operating Field.

Table F.1 - Pause Mark timing

	min.	**max.**
t_1	2,0 μs	3,0 μs
t_2	0,7 μs	t_1
t_3	0,0 μs	1,5 μs

Copyright International Organization for Standardization
Reproduced by IHS under license with ISO
No reproduction or networking permitted without license from IHS
Not for Resale
© ISO/IEC 2002 – All rights reserved

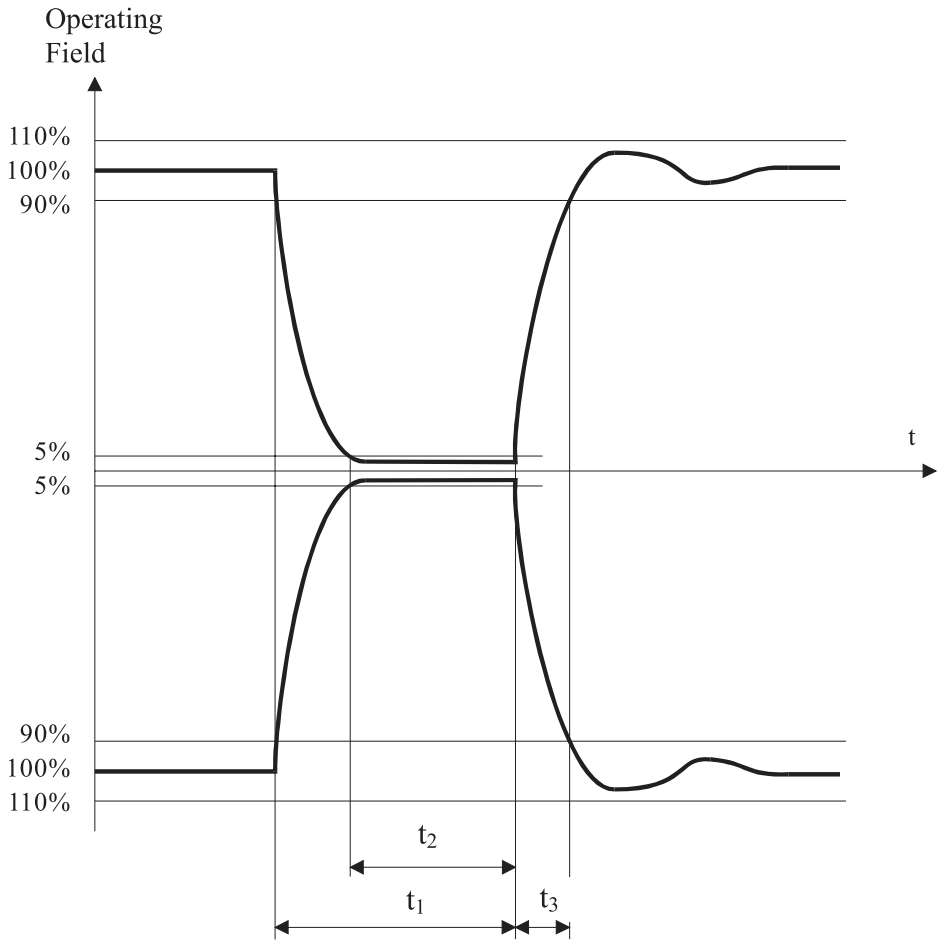

Figure F.2 - Illustration of Pause Mark

The LTO CM shall detect the end of the Pause Mark after the field exceeds 5 % of the nominal Operating Field and before it exceeds 60 % of the nominal Operating Field. See figure F.3. Time t_4 shall not exceed 0,4 µs.

© ISO/IEC 2002 – All rights reserved
Copyright International Organization for Standardization
Reproduced by IHS under license with ISO
No reproduction or networking permitted without license from IHS
Not for Resale

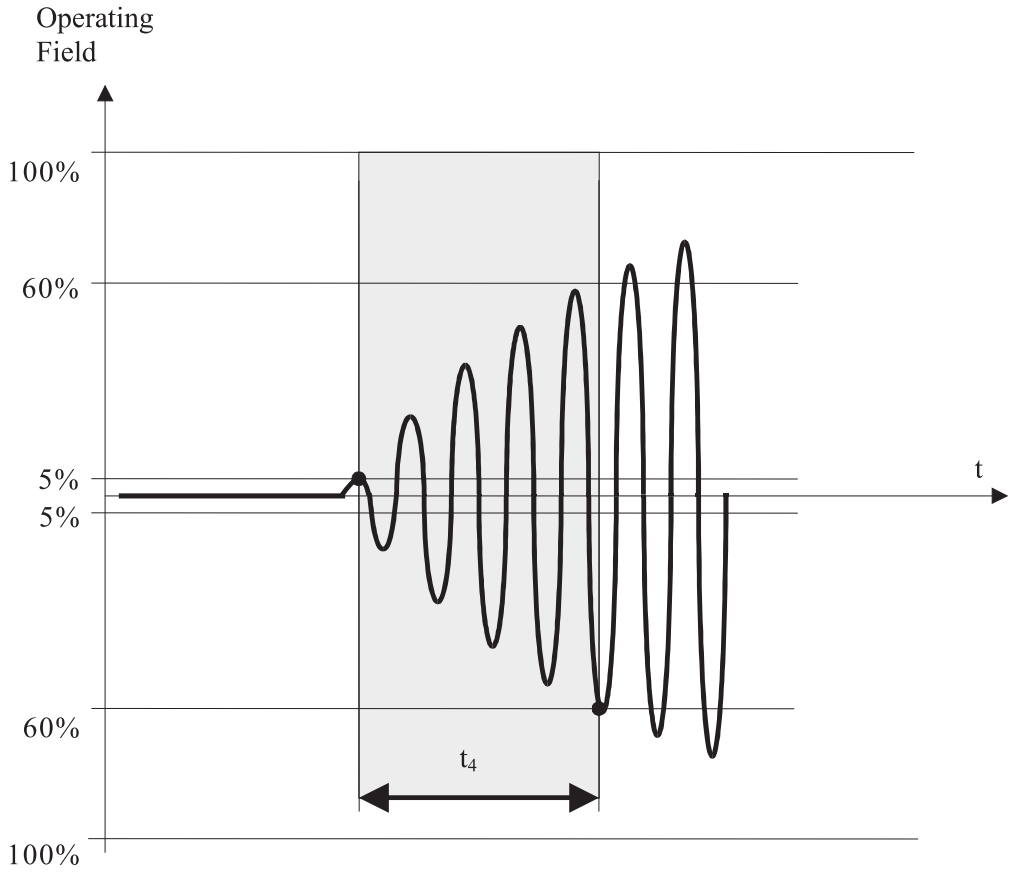

Figure F.3 - End of Pause Mark

F.5 Communication from LTO CM to LTO CM reader

The LTO CM shall communicate to the LTO CM reader by load modulating the Operating Field with a subcarrier as described below. The bit coding for commands and data sent from the LTO CM to the LTO CM reader shall be Manchester encoding of the subcarrier. The subcarrier frequency and the LTO CM to LTO CM reader bit period shall be

Subcarrier frequency: fc/16

Bit period: 128 cycles of the Operating Field

Messages from the LTO CM to the LTO CM reader shall comprise a Start Bit, followed by the number of bits in the message, no Stop Bit, followed by one or more bits of the unmodulated Operating Field.

logic l: Shall comprise 64 cycles of the Operating Field modulated by the subcarrier, followed by 64 cycles of the Operating Field with no modulation by the subcarrier.

logic 0: Shall comprise 64 cycles of the Operating Field with no modulation by the subcarrier, followed by 64 cycles of the Operating Field modulated by the subcarrier.

Start Bit: Shall be a logic 1.

Copyright International Organization for Standardization
Reproduced by IHS under license with ISO
No reproduction or networking permitted without license from IHS
Not for Resale

© ISO/IEC 2002 – All rights reserved

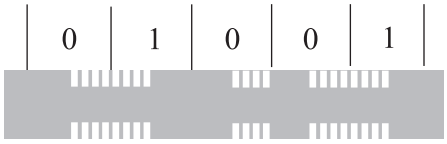

Figure F.4 - Manchester Biphase encoding

F.5.1 Load modulation

Load modulation is the process of amplitude modulating a radio frequency field by varying the properties of a resonant circuit placed within the radio frequency field. Figures F.5, F.6, and F.7 illustrate the principle of load modulation. In figure F.5 a resistive load is switched in a coil that is inductively coupled to another coil that generates a radio frequency field. Such switching amplitude modulates the radio frequency field in the coil that generates the radio frequency field. Figure F.7 illustrates the amplitude modulation that results from switching of the resistive load.

When communicating to the LTO CM reader, the LTO CM shall cause an amplitude modulation of 20 mV minimum in the radio frequency field generated by the LTO CM reader. This minimum shall be sustained when the LTO CM operates between the Minimum and Maximum Operating Field. The amplitude modulation shall be defined to be the amplitude of the side bands of the FFT of 4 periods of the sub-carrier. The amplitude modulation shall be measured using a 20 mm by 30 mm coil with 7,5 mm radius corners. These requirements shall be met when the coil is placed on either the rear surface of the cartridge, or the bottom surface of the cartridge. The coil shall be parallel to and centred along the centre line of the LTO CM. See figure 18.

Figure F.5 is a conceptual illustration of the LTO CM reader to LTO CM interface, showing an inductively coupled field being load modulated by the LTO CM.

NOTE - Figure F.5 is for illustration only. It is not intended for circuit design.

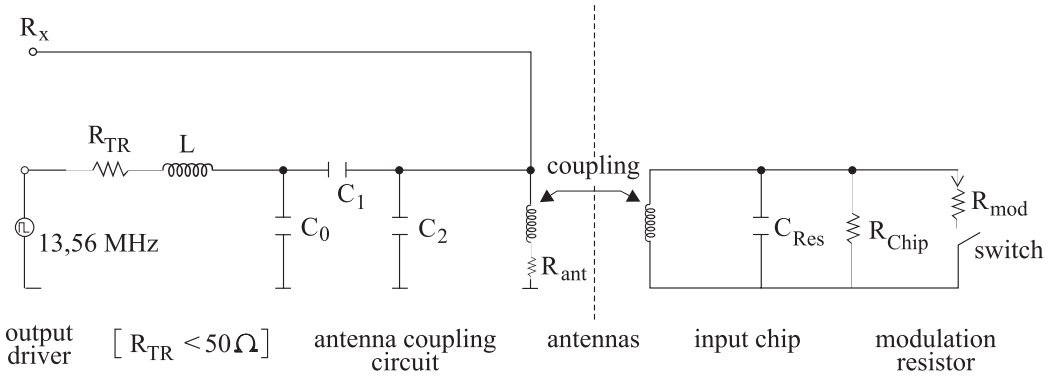

Figure F.5 - LTO CM interface network

© ISO/IEC 2002 – All rights reserved
Copyright International Organization for Standardization
Reproduced by IHS under license with ISO
No reproduction or networking permitted without license from IHS
Not for Resale

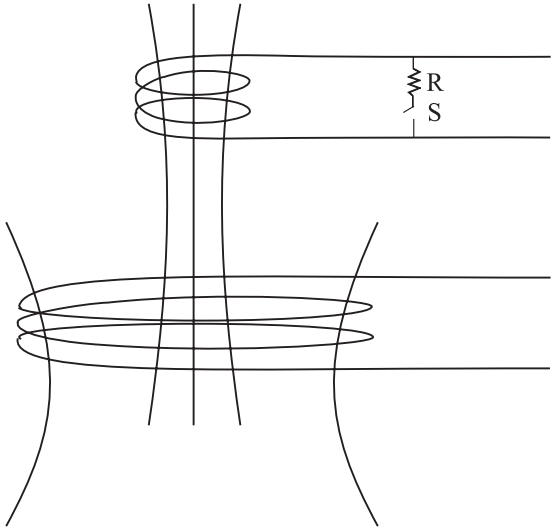

Figure F.6 - Illustration of load modulation modulator

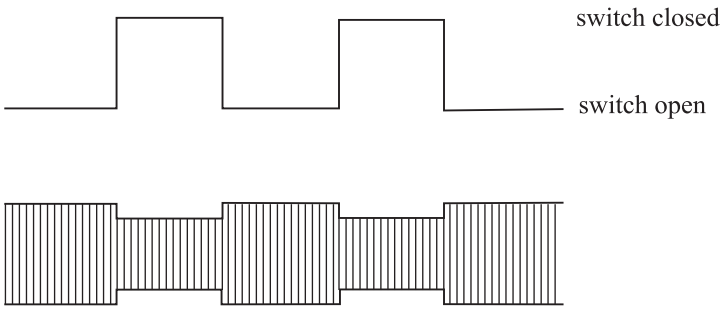

Figure F.7 - Load modulation waveform

F.5.2 Collisions

A collision occurs when more than one LTO CM transmits at the same time. Collisions are possible in response to the following commands: Request Standard, Request All, Request Serial Number, Read Serial Number.

If the LTO CMs transmit the same bit information, no collision occurs and the LTO CM reader receives the data without error. If the LTO CMs transmit differing bit information, a collision occurs. Figure F.8 illustrates the effect of a collision. The top and middle signals are transmitted by an LTO CM. Their combination, shown in the bottom signal, is the combined message as received by the LTO CM reader. The bits areas indicated by "coll" are those where differing information collided.

Copyright International Organization for Standardization
Reproduced by IHS under license with ISO
No reproduction or networking permitted without license from IHS
Not for Resale
© ISO/IEC 2002 – All rights reserved

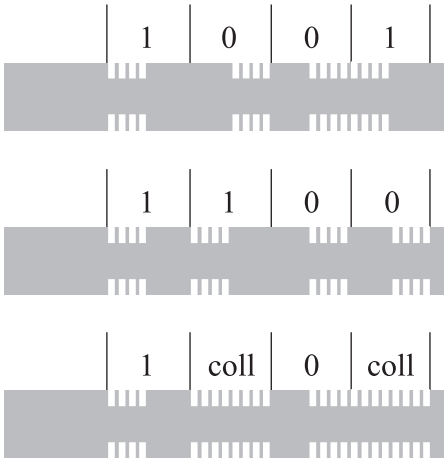

Figure F.8 - Collision

F.5.3 Timing

The transmissions of the LTO CM to the LTO CM reader shall be synchronous with the Operating Field.

The time between reception of the last Pause Mark of an LTO CM Reader command and the start of Load Modulation by the LTO CM in response to the command shall be defined as a fixed number of fc periods related to the end of the last Pause Mark. The end of the last Pause Mark shall be defined to start in the region identified by t_4 in figure F.3. The start of Load Modulation shall be defined as shown in figure F.9. Figure F.10 illustrates the response times for the three possible termination sequences of an LTO CM reader command or data.

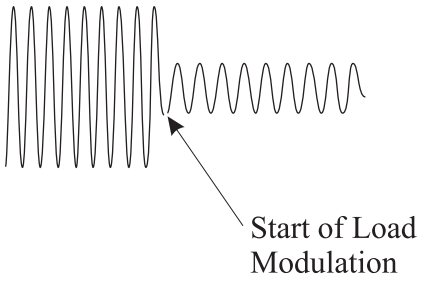

Figure F.9 - Start of Load Modulation

© ISO/IEC 2002 – All rights reserved
Copyright International Organization for Standardization
Reproduced by IHS under license with ISO
No reproduction or networking permitted without license from IHS
Not for Resale

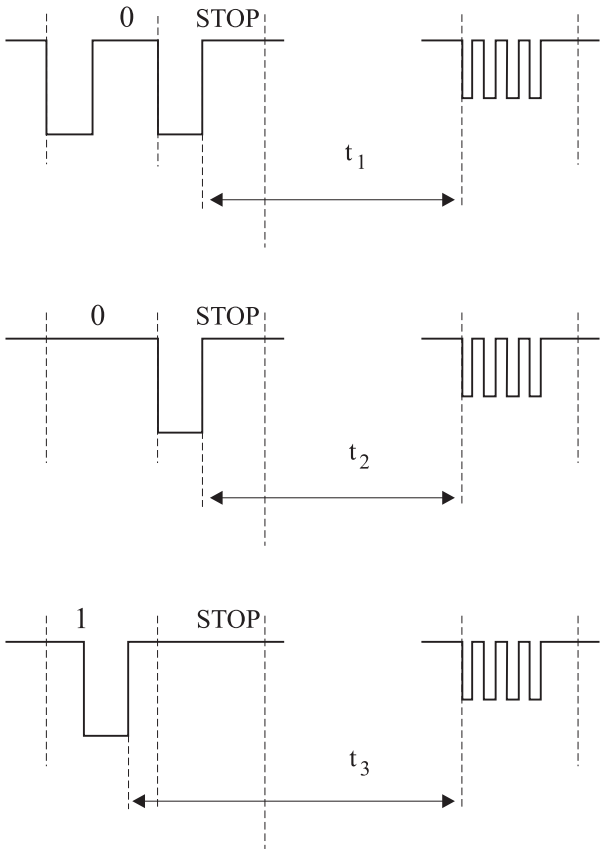

Figure F.10 - LTO CM response times

The response times shall be as shown in table F.2. Nominal values shall be used for all LTO CM responses with the following exception. The Extended values shall apply to the ACK and NACK responses after receipt of data in the Write Word command, and to the ACK and NACK responses after receipt of the second set of data words in the Write Block command.

Table F.2 - LTO CM response times

	Normal	Extended
t_1	1 172t_o	135 828t_o
t_2	1 172t_o	135 828t_o
t_3	1 236t_o	135 892t_o

Where $t_o = 1/fc$.

F.6 CRC

For commands and data that are protected by the 16-bit CRC, the generator polynomial shall be

$G(x) = x^{16} + x^{12} + x^5 + 1$

The CRC bytes shall be generated by processing all bytes through a generator circuit. See figure F.11. Registers R0 to R15 shall be 1 bit wide where R0 shall be the least significant bit and R15 the most significant bit. These registers shall be set to (6363) prior to the beginning of processing. The bytes shall be fed sequentially into the encoder, least significant bit first. After the bytes have been processed, the content of R0 is CRC0 and shall be the least significant bit. The content of R15 is CRC15 and shall be the most significant bit.

Copyright International Organization for Standardization
Reproduced by IHS under license with ISO
No reproduction or networking permitted without license from IHS
Not for Resale
© ISO/IEC 2002 – All rights reserved

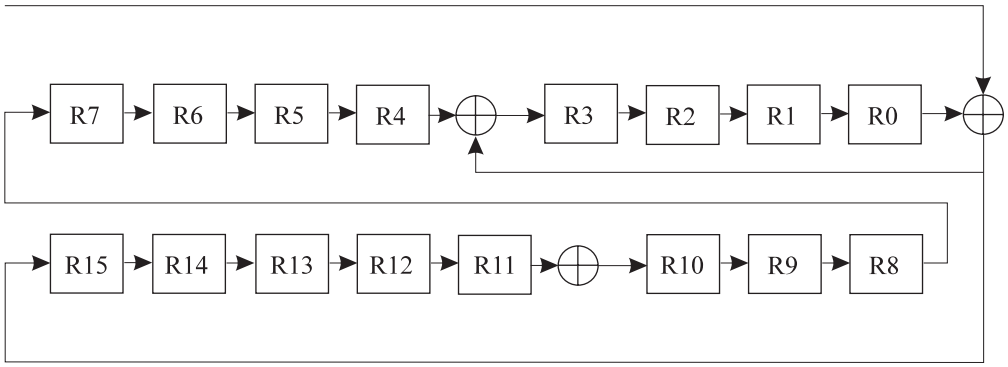

Figure F.11 - CRC generator

F.7 Parity Generation

Odd parity shall be generated for, and appended to, each 8-bit byte before being sent by either the LTO CM reader or the LTO CM. Parity shall not be generated for entities having fewer than 8 bits. The Start Bit shall not be included in the parity generation.

There are exception cases of parity generation for the Request All, Request Standard and Read Serial Number Commands.

– There shall be no parity generation for the Request All and Request Standard Commands.

– A special case of parity generation occurs for the Read Serial Number command. The LTO CM reader may send a serial number to the LTO CM which is not an integer multiple of 8 bits. When the serial number sent by the LTO CM reader is not an integer multiple of 8 bits, the LTO CM reader shall generate and append parity to all 8-bit bytes of the serial number, but shall not generate parity for the remaining bits, which are fewer than 8 bits.

  The LTO CM, when responding to a Read Serial Number command, may send a response to the LTO CM reader which is not an integer multiple of 8 bits. When the serial number sent by the LTO CM to the LTO CM reader is not an integer multiple of 8 bits, the LTO CM shall generate and append parity to all 8-bit bytes or fractions of 8-bit bytes. The parity for the fractional byte shall be generated over the entire 8-bit byte as if the LTO CM had transmitted the entire byte. For example, if the serial number transmitted by the LTO CM were to be an integer number of bytes plus 3 bits, then the LTO CM shall respond with 5 bits plus parity, where the parity is generated over the last 3 bits sent by the LTO CM reader and the first 5 bits of the LTO CM response. See figure F.12.

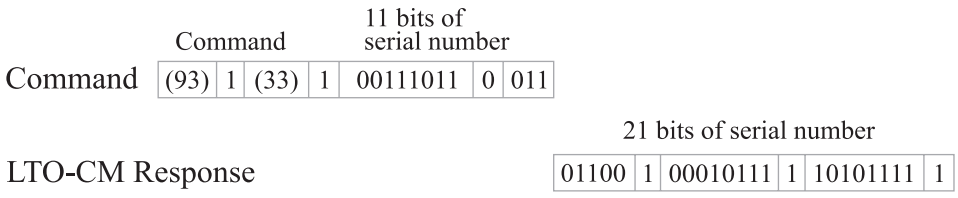

Figure F.12 - Parity for fractional byte

NOTE 1 - The command Stop Bit is not shown in figure F.12.

NOTE 2 - The serial number check byte is not shown in the LTO CM Response in figure F.12.

F.8 LTO CM states

The LTO CM shall have the following states:

– Non-operating state
– INIT state
– PRESELECT state
– COMMAND state
– HALT state

© ISO/IEC 2002 – All rights reserved
Copyright International Organization for Standardization
Reproduced by IHS under license with ISO
No reproduction or networking permitted without license from IHS
Not for Resale

The LTO CM shall enter the INIT state when it senses the application of the Operating Field, after a minimum of 10,0 ms during which it did not sense the Operating Field.

The states of the LTO CM are given in table F.3. Items toward the top of the table have precedence in order of execution, that is, for any state, begin at the first entry of that state then proceed down. The LTO CM action shall be the first entry in the table that satisfies the conditions. A framing error occurs when an incorrect number of bits are received for the defined command.

NOTE - For illustration, table F.3 indicates COMMAND substates within the commands Read Block, Write Word, and Write Block. They are COMMAND(rb), COMMAND(ww), and COMMAND(wb1 and wb2).

Table F.3 - LTO CM states

PRESENT STATE	LTO CM reader TRANSMISSION	LTO CM RESPONSE	NEXT STATE
Non-operating	Operating Field applied	Initialises	INIT
Any state	Operating Field removed	Shuts down	Non-operating
Any state	Framing Error	No Response	INIT

PRESENT STATE	LTO CM reader TRANSMISSION	LTO CM RESPONSE	NEXT STATE
INIT	Request Standard	Send Type	PRESELECT
	Request All	Send Type	PRESELECT
	Test Commands	The LTO CM response is undefined and shall be ignored for interchange.	PRESELECT
	Any other command or transmission	No response	INIT

PRESENT STATE	LTO CM reader TRANSMISSION	LTO CM RESPONSE	NEXT STATE
PRESELECT	Any transmission with incorrect parity	No response	INIT
	Any transmission with incorrect CRC	No response	INIT
	Request Serial Number	Send serial number	PRESELECT
	Read Serial Number, serial number fragment matches that in LTO CM	Send partial serial number	PRESELECT
	Read Serial Number, serial number fragment does not match that in LTO CM	No response	INIT
	Select, serial number matches that in LTO CM	Send ACK	COMMAND
	Select, serial number does not match that in LTO CM	No response	INIT
	Any other command	No response	INIT

Copyright International Organization for Standardization
Reproduced by IHS under license with ISO
No reproduction or networking permitted without license from IHS
Not for Resale

© ISO/IEC 2002 – All rights reserved

PRESENT STATE	LTO CM reader TRANSMISSION	LTO CM RESPONSE	NEXT STATE
COMMAND	Any transmission with incorrect parity	NACK	INIT
COMMAND	Any transmission with incorrect CRC	NACK	INIT
COMMAND	Read Word, word address valid	Send response data	COMMAND
COMMAND	Read Word, word address invalid	NACK	INIT
COMMAND	Read Block, block address valid	Send response data	COMMAND (rbc)
COMMAND	Read Block, block address invalid	NACK	INIT
COMMAND	Write Word, write-inhibit correct, word address valid	ACK	COMMAND (ww)
COMMAND	Write Word, write-inhibit incorrect and/or word address invalid	NACK	INIT
COMMAND	Write Block, write-inhibit correct, block address valid	ACK	COMMAND (wb1)
COMMAND	Write Block, write-inhibit incorrect and/or block address invalid	NACK	INIT
COMMAND	Halt	ACK	HALT
COMMAND	Any other command	NACK	INIT
COMMAND (rbc)	Read Block Continue	Send response data	COMMAND
COMMAND (rbc)	Read Block Continue, parity incorrect	No response	INIT
COMMAND (rbc)	Any Other Command parity valid or invalid	No response	INIT
COMMAND (ww)	Write Word data word, parity and CRC correct, sufficient energy to write data to EEPROM	ACK	COMMAND
COMMAND (ww)	Write Word data word, parity and/or CRC incorrect, and/or insufficient energy to write data to EEPROM	NACK	INIT
COMMAND (wb1)	Write Block first 8 words, parity and CRC correct	ACK	COMMAND (wb2)
COMMAND (wb1)	Write Block first 8 words, parity and/or CRC incorrect	NACK	INIT
COMMAND (wb2)	Write Block second 8 words, parity and CRC correct, sufficient energy to write data to EEPROM	ACK	COMMAND
COMMAND (wb2)	Write Block second 8 words, parity and/or CRC incorrect, and/or insufficient energy to write data to EEPROM	NACK	INIT

© ISO/IEC 2002 – All rights reserved
Copyright International Organization for Standardization
Reproduced by IHS under license with ISO
No reproduction or networking permitted without license from IHS
Not for Resale

PRESENT STATE	LTO CM reader TRANSMISSION	LTO CM RESPONSE	NEXT STATE
HALT	Request All	Send Type	PRESELECT
	Any other command or transmission.	No response	HALT

F.9 Typical LTO CM reader to LTO CM dialogue

Dialogue between the LTO CM reader and LTO CM shall occur with or without collisions.

F.9.1 Dialogue Without Collisions

Dialogue between the LTO CM reader and the LTO CM shall be initiated by the following operation sequence:

- The LTO CM reader transmits the Operating Field.
- The LTO CM shall enter the INIT state upon detecting the Operating Field.
- The LTO CM shall await receipt of the Request Standard or Request All from the LTO CM reader.
- The LTO CM reader shall transmit the Request Standard or Request All command.
- The LTO CM shall transmit the LTO CM type information.
- The LTO CM reader shall transmit the Request Serial Number command.
- The LTO CM shall transmit the serial number.
- The LTO CM reader shall verify that the serial number transmission has not had any collisions. (see F.9.2 for handling collisions).
- The LTO CM reader shall transmit the Select command.
- The LTO CM shall enter the COMMAND state upon receipt of the Select command.
- In the COMMAND state, the LTO CM can be read, written to, or placed into the HALT or INIT states as described in the state table of F.8.
- Those LTO CM that are in HALT state shall be set to the INIT state by switching the Operating Field off, then on, or by receipt of a Request All command.

F.9.2 Handling Collisions

If the LTO CM reader detects a collision, it may issue a sequence of commands by which the serial number of any LTO CM can be uniquely determined. Figure F.13 illustrates a command sequence by which the LTO CM reader can resolve serial numbers.

Copyright International Organization for Standardization
Reproduced by IHS under license with ISO
No reproduction or networking permitted without license from IHS
Not for Resale
© ISO/IEC 2002 – All rights reserved

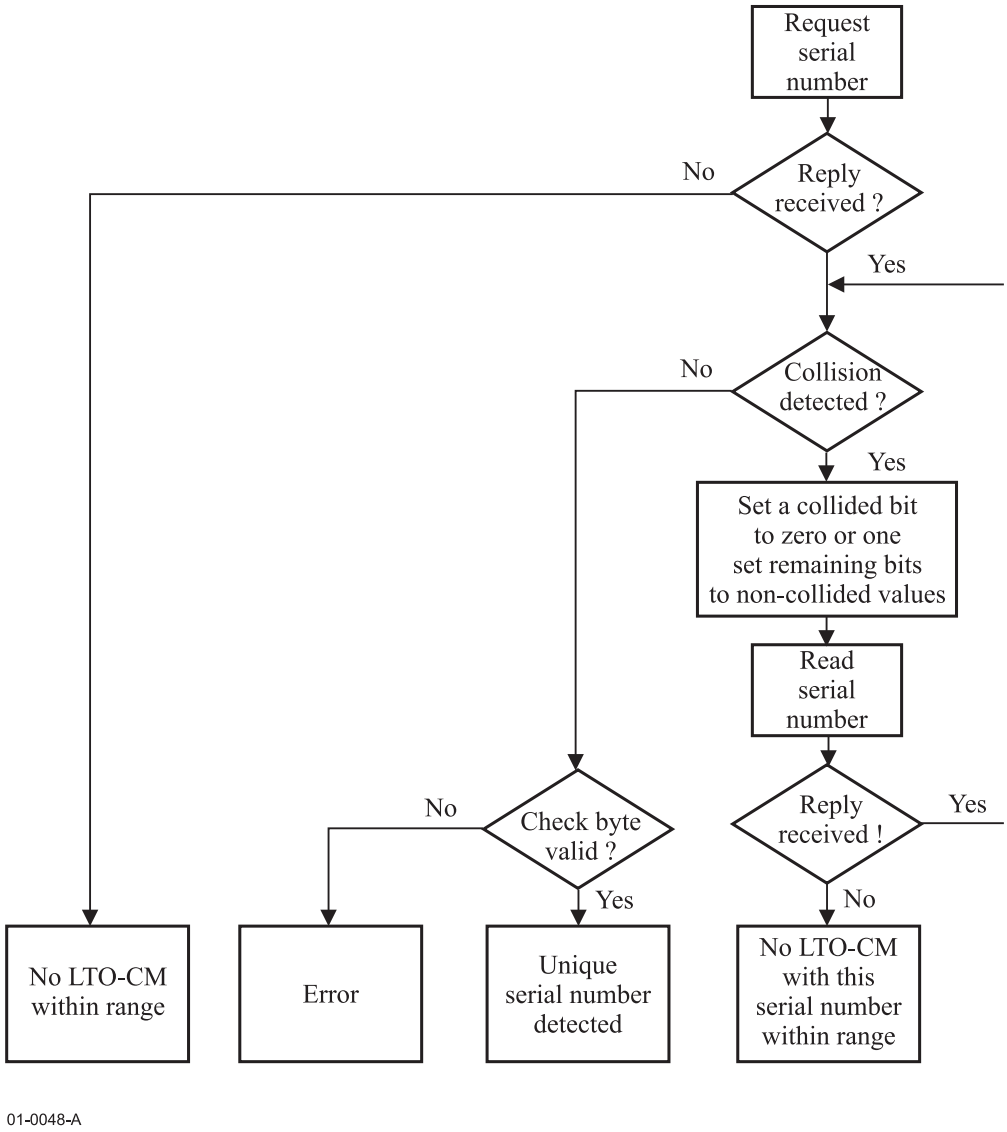

Figure F.13 - Collision resolution

F.10 Messages

The LTO CM reader shall issue, and the LTO CM shall respond to, the commands shown below. Upon receipt of any command, the LTO CM shall perform the operation described below, and go to the next state, as described in table F.3.

Bytes shall be transmitted least significant byte first. Bits within bytes shall be transmitted least significant bit first.

All figures below use the following notation:

- S Start Bit
- P Parity bit
- T Stop Bit
- A ACK symbol
- N NACK symbol
- C0 the least significant byte of the CRC
- C1 the most significant byte of the CRC
- (xx) an 8-bit hexadecimal character, unless otherwise noted

Commands that are not defined by this International Standard shall be ignored.

ACK: The acknowledge message shall be the 4-bit character (A). The ACK message shall be sent without CRC and without parity.

© ISO/IEC 2002 – All rights reserved
Copyright International Organization for Standardization
Reproduced by IHS under license with ISO
No reproduction or networking permitted without license from IHS
Not for Resale

NACK: The no acknowledge message shall be the 4-bit character (5). The NACK message shall be sent without CRC and without parity.

Test Commands: Two test commands are defined for LTO CM manufacturer use. These commands shall be the 7-bit characters (0E) and (6C) and shall be valid only in the INIT state. The response from these commands shall be ignored for interchange. These commands shall not be used during interchange and should they be received intentionally or by error, the LTO CM shall be placed into the INIT state by issuing a command that is invalid for the PRESELECT state or by removal and application of the Operating Field.

Request Standard: Requests that all LTO CMs within the Operating Field, and that in the INIT state, shall respond with their type information. The LTO CM shall respond with the type information. The Request Standard command shall be the 7-bit character (45).

Command	S	(45)	T		
Response	S	D0	P	D1	P

Where D0 is Block 0, Byte 6 and D1 is Block 0, Byte 7.

Request All: Requests that all LTO CMs that are within the Operating field, and that are in the INIT state or that are in the HALT state, shall respond with their type information. The LTO CM shall respond with the Type information. The Request All command shall be the 7-bit character (4A).

Command	S	(4A)	T		
Response	S	D0	P	D1	P

Where D0 is Block 0, Byte 6 and D1 is Block 0, Byte 7.

Request Serial Number: Requests that all LTO CMs that are in the Operating Field, and are in the PRESELECT state, shall transmit their serial number. The LTO CM shall respond by sending its serial number.

Command	S	(93)	P	(20)	P	T

Response	S	D0	P	D1	P	D2	P	D3	P	D4	P

Where D0 to D4 are the LTO CM Serial Number and Check Byte (Block 0 bytes 0 to 4).

Read Serial Number: Requests that all LTO CMs that are in the Operating Field, and that are in the PRESELECT state, shall receive a part of a serial number. If the received part of the serial number matches that stored within the LTO CM, then that LTO CM shall transmit a number of serial number bits such that the serial number resulting from the combination of the Command and the Response shall comprise a complete 4-byte serial number plus a 1-byte check character.

For this command, the LTO CM reader shall transmit a command byte, followed by a length byte, followed by a serial number comprising at least 1 bit but not more than 32 bits. The serial number shall be divided into 8-bit symbols with the remaining bits forming the last symbol.

The bits of the length byte of the command shall be set as follows, where T_l is the sum of the bits in the command byte, the length byte, and the serial number:

– bits 3 to 0: shall be set to mod(T_l ,8), indicating the number of full 8-bit bytes transmitted;

– bits 7 to 4: shall be set to integer(T_l ,8), indicating the number of bits not in 8-bit bytes.

In response to the command, the LTO CM shall respond with remainder of the serial number bits and the check character. The first response symbol shall be 8 – mod(T_l ,8) bits in length, which shall be the leading bits of the remaining serial number. The remaining bits of the serial number shall be divided into 8-bit symbols. Lastly, the check character shall be set to the value resulting from the exclusive-OR of the four serial number bytes.

Copyright International Organization for Standardization
Reproduced by IHS under license with ISO
No reproduction or networking permitted without license from IHS
Not for Resale
© ISO/IEC 2002 – All rights reserved

Example with LTO CM reader sending a 19 bit serial number.

Command	S	(93)	P	(43)	P	S0	P	S1	P	Sx	T

Response	S	Sy	P	S3	P	S4	P

Where:

(43) is the length byte, indicating that the command contains 4 8-bit bytes and 3 bits not contained in 8-bit bytes

S0 and S1 are the first two bytes of a serial number

Sx is 3 bits of the third byte of a serial number

Sy is 5 bits of the third byte of a serial number

S3 is the last byte of a serial number

S4 is the check byte

Select: Requests that the LTO CM that is in the Operating Field, and is in the PRESELECT state, and that has the specified serial number, shall enter the COMMAND state, and prepare to receive from, or transmit data to, the LTO CM reader. The LTO CM shall enter the COMMAND state, and shall respond with the ACK message.

Command	S	(93)	P	(70)	P	S0	P	S1	P	S2	P	S3	P	S4	P	C0	P	C1	P	T

Response	S	A

Read Word: Requests that the LTO CM that is in the Operating Field, and that is in the COMMAND state, shall respond with the data word that is located at the specified Block and Word Address. The LTO CM shall respond with the 2-byte word located at the specified address if the command is performed correctly, or with NACK if the command is not decoded correctly.

Command	S	(4w)	P	B0	P	C0	P	C1	P	T

Response	S	D0	P	D1	P	C0	P	C1	P

Response	S	N

Where:

w is the 4-bit Word Address within the specified Block Address

B0 is the Block Address

D0 is the least significant byte of the data word

D1 is the most significant byte of the data word

Read Block: Requests that the LTO CM that is in the Operating Field, and that is in the COMMAND state, shall respond with the 8 data words which begin at the specified Block Address. The LTO CM shall respond by transmitting the data words to the LTO CM reader if the command is performed correctly, or it shall respond with NACK if the command is not decoded correctly.

Command	S	(30)	P	B0	P	C0	P	C1	P	T

Response	S	D0	P	D1	P	D2	P	…	…	D14	P	D15	P	C0	P	C1	P

Response	S	N

© ISO/IEC 2002 – All rights reserved
Copyright International Organization for Standardization
Reproduced by IHS under license with ISO
No reproduction or networking permitted without license from IHS
Not for Resale

Where:

B0 is the Block Address

D0 is the least significant byte of the data sequence

D15 is the most significant byte of the data sequence

Read Block Continue: Requests that the LTO CM that is in the Operating Field, and that is in the COMMAND state, shall respond with the 8 data words which begin at Word 8 of the Block Address that was specified in the previous Read Block command. The LTO CM shall respond by transmitting the data words to the LTO CM reader if the command is performed correctly. There shall be no response message if the command is not decoded correctly.

Command	S	(80)	P	T												
Response	S	D16	P	D17	P	D18	P	…	…	D30	P	D31	P	C0	P	C1	P

Where:

D16 is the least significant byte of the data sequence

D31 is the most significant byte of the data sequence

Write Word: Requests that the LTO CM that is in Operating Field, and that is in the COMMAND state, shall prepare to store the data word at the location specified. The LTO CM shall respond with the ACK signal if the command was performed correctly, or respond with the NACK if the command was not decoded correctly.

Command	S	(Bw)	P	B0	P	C0	P	C1	P	T
Response	S	A								
Response	S	N								

The LTO CM shall then accept the data word and store it in the previously specified location, and it shall respond with the ACK signal if the command was performed correctly, or shall respond with the NACK if the command was not decoded correctly.

Command	S	D0	P	D1	P	C0	P	C1	P	T
Response	S	A								
Response	S	N								

Where:

w is the 4-bit Word Address within the Block Address

B0 is the Block Address

D0 is the least significant byte of the data word

D1 is the most significant byte of the data word

Write Block: Requests that the LTO CM that is in the Operating Field, and that is in the COMMAND state, shall prepare to store the data block beginning at the specified Block Address. The LTO CM shall respond with the ACK signal if the command was performed correctly, or shall respond with the NACK signal if the command was not decoded correctly.

Copyright International Organization for Standardization
Reproduced by IHS under license with ISO
No reproduction or networking permitted without license from IHS
Not for Resale
© ISO/IEC 2002 – All rights reserved

Command	S	(A0)	P	B0	P	C0	P	C1	P	T

Response	S	A

Response	S	N

The LTO CM shall then accept the first 8 data words and store them in a temporary location. The LTO CM shall respond with the ACK signal if the command was performed correctly, or shall respond with the NACK if the command was not decoded correctly.

Command	S	D0	P	D1	P	D2	P	…	…	D14	P	D15	P	C0	P	C1	P	T

Response	S	A

Response	S	N

The LTO CM shall then accept the next 8 data words. The LTO CM shall then store the first 8 words that reside in the temporary location into the EEPROM beginning at Word 1 and store the 8 words received with this command beginning at Word 8 of the previously specified Block Address. The LTO CM shall respond with the ACK signal if the command was performed correctly, or shall respond with the NACK if the command was not decoded correctly.

Command	S	D16	P	D17	P	D18	P	…	…	D30	P	D31	P	C0	P	C1	P	T

Response	S	A

Response	S	N

Where:

B0 is the Block Address

D0 is the least significant byte of the data sequence of the first 8 data words transmitted

D15 is the most significant byte of the data sequence of the first 8 data words transmitted

D16 is the least significant byte of the data sequence of the second 8 data words transmitted

D31 is the most significant byte of the data sequence of the second 8 data words transmitted

Halt: Requests that the LTO CM that is in the Operating Field, and that is in the COMMAND state, shall enter the Halt Mode. The LTO CM shall respond with the ACK signal if the command was performed correctly, or shall respond with the NACK if the command was not decoded correctly.

Command	S	(50)	P	(B0)	P	C0	P	C1	P	T

Response	S	A

Response	S	N

The contents of B0 shall be ignored in interchange.

--`,,`,,`-`-`,,`,,`,`,,`---

© ISO/IEC 2002 – All rights reserved
Copyright International Organization for Standardization
Reproduced by IHS under license with ISO
No reproduction or networking permitted without license from IHS
Not for Resale

Annex G
(informative)

Recommendations for Transportation

G.1 Environment

It is recommended that during transportation that the cartridges be kept within the following conditions:

– temperature: - 23 °C to 49 °C

– relative humidity: 5 % to 80 %

– wet bulb temperature: 26 °C max.

There should be no condensation in or on the cartridge.

G.2 Hazards

Transportation of cartridges involves three basic potential hazards.

G.2.1 Impact loads and vibration

The following recommendations should minimise damage during transportation.

i. Avoid mechanical loads that would distort the cartridge shape.

ii. Avoid dropping the cartridge more than 1,0 m.

iii. Cartridges should be placed in individual cartridge containers and the containers should be properly latched.

iv. Cartridges (in containers) should be fitted into a rigid shipping box containing adequate shock-absorbent material.

v. The final box should have a clean interior and a construction that provides sealing to prevent the ingress of dirt and water.

vi. The orientation of the cartridges within the final box should be such that the axes of the tape reels are horizontal.

vii. The final box should be clearly marked to indicate its correct orientation.

G.2.2 Extremes of temperature and humidity

i. Extreme changes in temperature and humidity should be avoided.

ii. Whenever a cartridge is received, it should be conditioned in the operating environment for a period of at least 24 h before it is used.

G.2.3 Effects of stray magnetic fields

During shipping, the cartridge should not be exposed to a field in excess of 4 000 A/m.

Copyright International Organization for Standardization
Reproduced by IHS under license with ISO
No reproduction or networking permitted without license from IHS
Not for Resale
© ISO/IEC 2002 – All rights reserved

Annex H
(informative)

Inhibitor Tape

For the purpose of this annex the inhibitor tape shall consist of the leader tape and the data tape.

Any tape that reduces the performance of the tape drive or other tapes is called an inhibitor tape. Certain tape characteristics can contribute to poor tape drive performance. These characteristics include: high abrasivity, high static friction to tape path components, poor edge conditions, excessive tape wear debris, electro-static charge build-up on the tape or tape path components, interlayer slippage, transfer of coating to the back of the next tape layer, separation of tape constituents causing deposits that may lead to tape sticking or poor performance of other tapes. Tapes that have these characteristics may not give satisfactory performance and can result in excessive errors.

Tapes to be used in this cartridge should not be inhibitor tapes.

© ISO/IEC 2002 – All rights reserved

Copyright International Organization for Standardization
Reproduced by IHS under license with ISO
No reproduction or networking permitted without license from IHS
Not for Resale

Annex I
(informative)

Vendor Code Lists

Technical Committee T10 of Accredited Standards Committee NCITS maintains an informal list of vendor identification codes currently in use.

The vendor identification codes consist of 8 or fewer ASCII characters from the set (21) to (7E), with the exclusion of character (3B). Spaces (character (20)) are added to the right to make the vendor code exactly 8 characters.

A list of such codes may be obtained by contacting the chairman of T10. Vendors are requested to voluntarily submit their identification codes to T10 to prevent duplication of codes.

The name of the T10 chairman can be obtained from http://www.ncits.org.

A complete list can be obtained from ftp://ftp.t10.org/t10/vendorid.txt.

--`,,`,,`-`-`,,`,,`,`,,`---

Copyright International Organization for Standardization
Reproduced by IHS under license with ISO
No reproduction or networking permitted without license from IHS

© ISO/IEC 2002 – All rights reserved

Not for Resale

Copyright International Organization for Standardization
Reproduced by IHS under license with ISO
No reproduction or networking permitted without license from IHS
Not for Resale

ICS 35.220.23

Price based on 128 pages

© ISO/IEC 2002 – All rights reserved

Copyright International Organization for Standardization
Reproduced by IHS under license with ISO
No reproduction or networking permitted without license from IHS

Not for Resale