INTERNATIONAL STANDARD

ISO/IEC 21989

First edition
2002-07-01

Information technology — Telecommunications and information exchange between systems — Private Integrated Services Network — Specification, functional model and information flows — Short message service

Technologies de l'information — Télécommunications et échange d'information entre systèmes — Réseaux privés avec intégration de services — Spécification, modèle fonctionnel et débit des informations — Service de message court

Reference number
ISO/IEC 21989:2002(E)

© ISO/IEC 2002

Copyright International Organization for Standardization
Provided by IHS under license with ISO
No reproduction or networking permitted without license from IHS

Not for Resale

PDF disclaimer

This PDF file may contain embedded typefaces. In accordance with Adobe's licensing policy, this file may be printed or viewed but shall not be edited unless the typefaces which are embedded are licensed to and installed on the computer performing the editing. In downloading this file, parties accept therein the responsibility of not infringing Adobe's licensing policy. The ISO Central Secretariat accepts no liability in this area.

Adobe is a trademark of Adobe Systems Incorporated.

Details of the software products used to create this PDF file can be found in the General Info relative to the file; the PDF-creation parameters were optimized for printing. Every care has been taken to ensure that the file is suitable for use by ISO member bodies. In the unlikely event that a problem relating to it is found, please inform the Central Secretariat at the address given below.

© ISO/IEC 2002

All rights reserved. Unless otherwise specified, no part of this publication may be reproduced or utilized in any form or by any means, electronic or mechanical, including photocopying and microfilm, without permission in writing from either ISO at the address below or ISO's member body in the country of the requester.

ISO copyright office
Case postale 56 • CH-1211 Geneva 20
Tel. + 41 22 749 01 11
Fax + 41 22 749 09 47
E-mail copyright@iso.ch
Web www.iso.ch

Printed in Switzerland

Copyright International Organization for Standardization
Provided by IHS under license with ISO
No reproduction or networking permitted without license from IHS

© ISO/IEC 2002 – All rights reserved

Not for Resale

Contents

Page

Foreword v

Introduction vi

1 Scope 1

2 Conformance 1

3 Normative references 1

4 Definitions 2

4.1 External definitions 2
4.2 Other definitions 2

4.2.1 Command 2
4.2.2 Message Centre 2
4.2.3 Message Centre Case 2
4.2.4 ScAlert 2
4.2.5 Service Centre (SC) 3
4.2.6 Short Message (SM) 3
4.2.7 Short Message Waiting Data 3
4.2.8 Status Report 3
4.2.9 Terminal Case 3

5 Acronyms 3

6 SS-Short Message Service stage 1 specification 4

6.1 Description 4

6.1.1 General description 4
6.1.2 Qualifications on applicability to telecommunications services 4

6.2 Procedures 4

6.2.1 Provision/withdrawal 4
6.2.2 Normal procedures 4
6.2.3 Exceptional procedures 5

6.3 Interactions with other Supplementary Services/ Additional Network Features 5

6.3.1 Calling Line Identification Presentation (SS-CLIP) 5
6.3.2 Connected Line Identification Presentation (SS-COLP) 5
6.3.3 Calling/Connected Line Identification Restriction (SS-CLIR) 5
6.3.4 Calling Name Identification Presentation (SS-CNIP) 5
6.3.5 Calling/Connected Name Identification Restriction (SS-CNIR) 5
6.3.6 Connected Name Identification Presentation (SS-CONP) 5
6.3.7 Completion of Calls to Busy Subscriber (SS-CCBS) 5
6.3.8 Completion of Calls on No Reply (SS-CCNR) 5
6.3.9 Call Transfer (SS-CT) 5
6.3.10 Call Forwarding Unconditional (SS-CFU) 6
6.3.11 Call Forwarding Busy (SS-CFB) 6
6.3.12 Call Forwarding No Reply (SS-CFNR) 6
6.3.13 Call Deflection (SS-CD) 6
6.3.14 Path Replacement (ANF-PR) 6
6.3.15 Call Offer (SS-CO) 6
6.3.16 Call Intrusion (SS-CI) 6

© ISO/IEC 2002 – All rights reserved

Copyright International Organization for Standardization
Provided by IHS under license with ISO
No reproduction or networking permitted without license from IHS
Not for Resale

6.3.17 Do Not Disturb (SS-DND) **6**
6.3.18 Do Not Disturb Override (SS-DNDO) **6**
6.3.19 Advice of Charge (SS-AOC) **6**
6.3.20 Recall (SS-RE) **6**
6.3.21 Call Interception (ANF-CINT) **6**
6.3.22 Transit Counter (ANF-TC) **6**
6.3.23 Route Restriction Class (ANF-RRC) **6**
6.3.24 Message Waiting Indication (SS-MWI) **6**
6.3.25 Wireless Terminal Location Registration (SS-WTLR) **6**
6.3.26 Wireless Terminal Mobility Incoming Call (ANF-WTMI) **6**
6.3.27 Wireless Terminal Mobility Outgoing Call (ANF-WTMO) **6**
6.3.28 Authentication of a WTM user (SS-WTAT) **6**
6.3.29 Authentication of the PISN (SS-WTAN) **6**
6.3.30 Private User Mobility Incoming Call (ANF-PUMI) **7**
6.3.31 Private User Mobility Outgoing Call (ANF-PUMO) **7**
6.3.32 Private User Mobility Registration (SS-PUMR) **7**
6.3.33 Common Information (ANF-CMN) **7**
6.3.34 Call Priority Interruption (Protection) (SS-CPI(P)) **7**
6.3.35 Single Step Call Transfer (SS-SSCT) **7**
6.3.36 Simple Dialog (SS-SD) **7**
6.3.37 Call Identification and Call Linkage (ANF-CIDL) **7**

6.4 Interworking considerations **7**
6.5 Overall SDL **8**

7 Short Message Service stage 2 description **10**

7.1 Functional model **10**

7.1.1 Functional model description **10**
7.1.2 Description of Functional Entities **10**
7.1.3 Relationship of functional model to Basic Call functional model **12**

7.2 Information flows **12**

7.2.1 Definition of information flows **12**
7.2.2 Information flow sequences **20**

7.3 Functional Entity actions **25**

7.3.1 Functional Entity actions of FE1 **25**
7.3.2 Functional Entity actions of FE2 **25**
7.3.3 Functional Entity actions of FE3 **26**
7.3.4 Functional Entity actions of FE4 **26**
7.3.5 Functional Entity actions of FE5 **26**
7.3.6 Functional Entity actions of FE6 **27**
7.3.7 Functional Entity actions of FE7 **27**

7.4 Functional Entity behaviour **27**

7.4.1 Behaviour of FE1 **28**
7.4.2 Behaviour of FE2 **29**
7.4.3 Behaviour of FE3 **29**
7.4.4 Behaviour of FE4 **31**
7.4.5 Behaviour of FE5 **34**
7.4.6 Behaviour of FE6 **34**
7.4.7 Behaviour of FE7 **35**

7.5 Allocation of Functional Entities to physical equipment **37**
7.6 Interworking considerations **37**

Annex A - Description of PDU elements **38**

© ISO/IEC 2002 – All rights reserved
Copyright International Organization for Standardization
Provided by IHS under license with ISO
No reproduction or networking permitted without license from IHS
Not for Resale

Foreword

ISO (the International Organization for Standardization) and IEC (the International Electrotechnical Commission) form the specialized system for worldwide standardization. National bodies that are members of ISO or IEC participate in the development of International Standards through technical committees established by the respective organization to deal with particular fields of technical activity. ISO and IEC technical committees collaborate in fields of mutual interest. Other international organizations, governmental and non-governmental, in liaison with ISO and IEC, also take part in the work. In the field of information technology, ISO and IEC have established a joint technical committee, ISO/IEC JTC 1.

International Standards are drafted in accordance with the rules given in the ISO/IEC Directives, Part 3.

The main task of the joint technical committee is to prepare International Standards. Draft International Standards adopted by the joint technical committee are circulated to national bodies for voting. Publication as an International Standard requires approval by at least 75 % of the national bodies casting a vote.

Attention is drawn to the possibility that some of the elements of this International Standard may be the subject of patent rights. ISO and IEC shall not be held responsible for identifying any or all such patent rights.

ISO/IEC 21989 was prepared by ECMA (as ECMA-324) and was adopted, under a special “fast-track procedure”, by Joint Technical Committee ISO/IEC JTC 1, *Information technology*, in parallel with its approval by national bodies of ISO and IEC.

Annex A forms a normative part of this International Standard.

© ISO/IEC 2002 – All rights reserved

Copyright International Organization for Standardization
Provided by IHS under license with ISO
No reproduction or networking permitted without license from IHS
Not for Resale

Introduction

This International Standard is one of a series of Standards defining services and signalling protocols applicable to Private Integrated Services Networks (PISNs). The series uses ISDN concepts as developed by ITU-T and conforms to the framework of International Standards for Open Systems Interconnection as defined by ISO/IEC.

This International Standard specifies the Short Message Service.

This International Standard is based upon the practical experience of ECMA member companies and the results of their active and continuous participation in the work of ISO/IEC JTC 1, ITU-T, ETSI and other international and national standardization bodies. It represents a pragmatic and widely based consensus.

© ISO/IEC 2002 – All rights reserved
Copyright International Organization for Standardization
Provided by IHS under license with ISO
No reproduction or networking permitted without license from IHS
Not for Resale

Information technology — Telecommunications and information exchange between systems — Private Integrated Services Network — Specification, functional model and information flows — Short message service

1 Scope

This International Standard specifies the Short Message Service (SMS).

SMS enables a user to send and receive Short Messages (SMs) to and from another user.

This service is based on GSM 03.40. The Service Centre functionality described in this International Standard is equal to the functionality of a Service Centre in GSM 03.40. Thus, for interoperability with a GSM network, it is only necessary to implement a QSIG interface.

NOTE 1 - The interworking with other air interfaces is not precluded, but is outside the scope of this International Standard.

NOTE 2 - The Short Message Service is a special kind of basic service but is described in this document in the style of a supplementary service.

Supplementary service specifications are produced in three stages, according to the method described in ETS 300 387. This International Standard contains the stage 1 and stage 2 specifications of SMS. The stage 1 specification (clause 6) specifies the service as seen by users of PISNs. The stage 2 specification (clause 7) identifies the functional entities involved in the service and the information flows between them.

2 Conformance

In order to confirm to this International Standard, a stage 3 standard shall specify signalling protocols and equipment behaviour that are capable of being used in a PISN which supports the service specified in this International Standard. This means that, to claim conformance, a stage 3 standard is required to be adequate for the support of those aspects of clause 6 (stage 1) and clause 7 (stage 2) which are relevant to the interface or equipment to which the stage 3 standard applies.

3 Normative references

The following normative documents contain provisions which, through reference in this text, constitute provisions of this International Standard. For dated references, subsequent amendments to, or revisions of, any of these publications do not apply. However, parties to agreements based on this International Standard are encouraged to investigate the possibility of applying the most recent editions of the normative documents indicated below. For undated references, the latest edition of the normative document referred to applies. Members of ISO and IEC and maintain registers of currently valid International Standards.

ISO/IEC 11571:1998, *Information technology - Telecommunications and information exchange between systems - Private Integrated Services Networks - Addressing*

ISO/IEC 11574:2000, *Information technology - Telecommunications and information exchange between systems - Private Integrated Services Network - Circuit-mode 64 kbit/s bearer services - Service description, functional capabilities and information flows*

ISO/IEC 11579-1:1994, *Information technology - Telecommunications and information exchange between systems - Private Integrated Services Network - Part 1: Reference configuration for PISN exchanges (PINX)*

ISO/IEC 13864:1995, *Information technology - Telecommunications and information exchange between systems - Private Integrated Services Network - Specification, functional model and information flows - Name identification supplementary services*

ISO/IEC 15505:2000, *Information technology - Telecommunications and information exchange between systems - Private Integrated Services Network (PISN) - Specification, Functional Model and Information Flows - Message Waiting Indication Supplementary Service*

© ISO/IEC 2002 – All rights reserved

Copyright International Organization for Standardization
Provided by IHS under license with ISO
No reproduction or networking permitted without license from IHS
Not for Resale

ETSI GTS GSM 03.38, *Digital cellular telecommunications systems (Phase 2+); Alphabets and language-specific information*

ETSI TS 100 901, *Digital cellular telecommunications systems (Phase 2+); Technical realization of the Short Message Service (SMS) (GSM 03.40)*

ETSI TS 101 032, *Digital cellular telecommunications systems (Phase 2+); Compression algorithm for text messaging services* (GSM 03.42)

ETSI TS 100 942, *Digital cellular telecommunications systems (Phase 2+); Point-to-Point (PP) Short Message Service (SMS) support on mobile radio interface* (GSM 04.11)

ETSI ETS 300 599, *Digital cellular telecommunications systems (Phase 2+); Mobile Application Part (MAP) specification* (GSM 09.02)

ETSI ETS 300 387, *Private Telecommunication Network (PTN); Method for the specification of basic and supplementary services*

ITU-T Rec. I.112:1993, *Vocabulary of terms for ISDNs*

ITU-T Rec. I.210:1993, *Principles of telecommunication services supported by an ISDN and the means to describe them*

ITU-T Rec. Z.100:1999, *Specification and description language (SDL)*

4 Definitions

For the purposes of this International Standard, the following definitions apply.

4.1 External definitions

This International Standard uses the following terms defined in other documents:

- Basic Service (ITU-T Rec. I.210)
- Private Integrated services Network eXchange (PINX) (ISO/IEC 11579-1)
- Private Integrated Services Network (PISN) (ISO/IEC 11579-1)
- Service (ITU-T Rec. I.112)
- Signalling (ITU-T Rec. I.112)
- Supplementary Service (ITU-T Rec. I.210)
- User (ISO/IEC 11574)

4.2 Other definitions

NOTE 3 - Further PDU elements are described in annex A.

4.2.1 Command

A Short Message data unit which enables the Sending User to request the Service Centre to perform a certain action, which might be related to a previously sent Short Message from the same Sending User.

As far as acknowledging and delivery is concerned, Commands are treated like Short Messages. In the case of certain Commands a Status Report may be sent in response from the SC which contains the outcome of the action.

4.2.2 Message Centre

The entity that activates or deactivates the Message Waiting Indication against the Receiving User as a result of the storage or retrieval of Short Messages. The Message Centre can serve as a sending, storing and receiving entity for Short Messages on behalf of the Sending and/ or the Receiving User.

4.2.3 Message Centre Case

This describes that either the Sending Users terminal or the Receiving Users terminal or both are not able to handle the procedures that are required by the SMS. In this case a Message Centre can act on behalf of these terminals. The procedures how a user can compose and retrieve SMS related information via a Message Centre are out of the scope of this International Standard.

4.2.4 ScAlert

Information provided to an SC that has previously initiated unsuccessful Short Message delivery attempt(s) to a specific Receiving User, that the Receiving User is now recognised to have recovered operation or to have memory available again.

© ISO/IEC 2002 – All rights reserved
Copyright International Organization for Standardization
Provided by IHS under license with ISO
No reproduction or networking permitted without license from IHS
Not for Resale

4.2.5 Service Centre (SC)

A function within the network that receives Short Messages from Sending Users. The SC is responsible for the relaying and store-and-forwarding of these Short Messages to the Receiving Users.

If a Receiving User is not able to receive a Short Message, the Service Centre has to store the Short Message and attempt to deliver the Short Message again at a later time. The Service Centre is responsible for a Short Message until it is successfully delivered to the Receiving User or the Validity Period expires.

Depending on the implementation of Short Message Waiting Data the SC either repeats the delivery attempt automatically in certain intervals or attempts to deliver the Short Message upon reception of a ScAlert information.

An SC may receive Commands from the Sending User and perform the requested actions.

Additionally, the Service Centre may provide Status Reports to a Sending User.

4.2.6 Short Message (SM)

Data unit containing the Short-Message-Text and additional data necessary for the transmission of the Short-Message-Text from the Sending to the Receiving User.

4.2.7 Short Message Waiting Data

SMS user specific information containing address information of one or more SCs, which unsuccessfully attempted to deliver a Short Message to a Receiving User while the user was not able to receive the Short Message (e.g. did not have memory available or was not reachable). The Short Message Waiting Data is used to alert the SC when the Receiving User has memory available or is reachable again.

4.2.8 Status Report

Information optionally sent from the SC to the Sending User containing the status of a Short Message submitted to a Receiving User or the outcome of a Command submitted to an SC. A Status Report for a Command or a Short Message is sent from the SC to the Sending User if it has been requested in the Short Message or Command.

4.2.9 Terminal Case

This describes that either the Sending Users terminal or the Receiving Users terminal or both are able to handle the procedures that are required by the SMS.

5 Acronyms

ANF	Additional Network Feature
FE	Functional Entity
PINX	Private Integrated services Network eXchange
PISN	Private Integrated Services Network
PNP	Private Numbering Plan
SC	Service Centre
SCTS	Service-Centre-Time-Stamp
SDL	Specification and Description Language
SM	Short Message
SMS	Short Message Service
SMSC	Short Message Service Centre
SMWD	Short Message Waiting Data
VP	Validity Period

© ISO/IEC 2002 – All rights reserved

Copyright International Organization for Standardization
Provided by IHS under license with ISO
No reproduction or networking permitted without license from IHS
Not for Resale

6 SS-Short Message Service stage 1 specification

6.1 Description

6.1.1 General description

The Short Message Service provides a means of sending messages of limited size point-to-point between network users. The provision of SMS makes use of a Service Centre which acts as a store-and-forward centre for Short Messages, i.e. all Short Messages are sent using a Service Centre which receives Short Messages from the Sending User, stores them and delivers them to the Receiving User. Thus the network needs to support the transfer of Short Messages between Sending User, Service Centre and Receiving User.

The Sending User sends the Short Message to the Service Centre where the Short Message is stored. The Service Centre attempts to deliver the Short Message to the Receiving User. If a Short Message cannot be delivered within a specific time (Validity Period) the Service Centre deletes the Short Message.

Other messages besides the user defined Short Messages can be sent using SMS:

- Status Reports inform the Sending User about the status of a previously sent Short Message or Command;
- Commands allow users to manipulate Short Messages already stored in a Service Centre or the behaviour of the Service Centre with regard to the Status Report procedure.

NOTE 4 - The functionality of the Service Centre in this specification is identical to the functionality of a Service Centre in GSM.

6.1.2 Qualifications on applicability to telecommunications services

This service does not apply directly to any basic telecommunication service.

6.2 Procedures

6.2.1 Provision/withdrawal

SMS may be provided after pre-arrangement with the service provider, or may be available generally to all users. SMS may be withdrawn on request of the user or for administrative reasons.

6.2.2 Normal procedures

6.2.2.1 Activation/deactivation/registration/interrogation

Not applicable.

6.2.2.2 Invocation and operation

All information shall be delivered by setting up a new call independent connection. Release of the call independent connection is in the responsibility of its initiator.

6.2.2.2.1 Normal operation

A Sending User shall be able to submit a Short Message to a Service Centre at any time, independently of whether or not there is a call in progress. An indication shall always be returned to the Sending User; either confirming that the SC received the Short Message or informing the Sending User that it was not possible to deliver the Short Message to the SC, including the reason why.

A Sending User shall be able to submit a Command to a Service Centre at any time, independently of whether or not there is a call in progress.

The Service Centre shall receive Commands from the Sending User and execute them. Upon reception of a Command the Service Centre shall execute the Command on the Short Message specified by the Short Message Number and the Originating-Address given in the Command information. An indication shall always be returned to the Sending User, either confirming the reception/ execution of the Command or indicating that the reception/ execution of the command failed, including the reason why.

A Receiving User shall be able to receive a Short Message from a Service Centre at any time, independently of whether or not there is a call in progress. An indication shall always be returned to the SC; either confirming that the Receiving User received the Short Message, or indicating that the reception of the Short Message failed, including the reason why.

If either a Short Message or a Command submitted to the Service Centre from a Sending User requests a Status Report, and the Status Report capabilities are included in the SC, it shall return one or more Status Reports to the Sending User. The Sending User shall be able to receive Status Reports from a Service Centre at any time, independently of whether or not there is a call in progress. An indication shall always be returned to the Service Centre, either confirming the reception of the Status Report or indicating that the reception failed, including the reason why.

© ISO/IEC 2002 – All rights reserved
Copyright International Organization for Standardization
Provided by IHS under license with ISO
No reproduction or networking permitted without license from IHS
Not for Resale

It shall be possible for the Sending User to send several correlated Short Messages, which together form a longer Message (Concatenated Short Message).

NOTE 5 - The acknowledging of a successful reception of a Short Message or a Status Report by the receiving entity does not imply that the Short Message or the Status Report has been displayed or in any other way delivered to the user.

6.2.3 Exceptional procedures

6.2.3.1 Activation/deactivation/interrogation

Not applicable.

6.2.3.2 Invocation and operation

If the Service Centre is not able to receive a Short Message from the Sending User it shall return an indication to the Sending User containing the Failure-Cause.

If the Service Centre is not able to receive/execute a command submitted from the Sending User it shall return an indication to the Sending User containing the Failure-Cause.

If the Receiving User is not able to receive a Short Message delivered from the Service Centre the Receiving User shall return an indication to the Service Centre containing the Failure-Cause.

If the Sending User is not able to receive a Status Report from the Service Centre the Sending User shall return an indication to the Service Centre containing the Failure-Cause.

If the Service Centre is not able to deliver a Short Message to a Receiving User because there is no memory available or the user is not reachable, the entity responsible for that Receiving User shall set an internal indication that a Service Centre attempted to deliver a Short Message to this user and store the address of that SC in the Short Message Waiting Data. When the Receiving User has memory available or is reachable again the entity shall send an ScAlert to the Service Centre, containing the address of the Receiving User and upon reception of an ScAlert confirmation delete the SC address from the SMWD list.

The implementation of the Short Message Waiting Data is optional. If it is not implemented it is up to the SC to repeat the delivery attempt periodically until the Validity Period expires.

6.3 Interactions with other Supplementary Services/ Additional Network Features

Interactions with other supplementary services and ANFs for which PISN standards were available at the time of this International Standard are specified below.

6.3.1 Calling Line Identification Presentation (SS-CLIP)

No interaction.

6.3.2 Connected Line Identification Presentation (SS-COLP)

No interaction.

6.3.3 Calling/Connected Line Identification Restriction (SS-CLIR)

No interaction.

6.3.4 Calling Name Identification Presentation (SS-CNIP)

No interaction.

6.3.5 Calling/Connected Name Identification Restriction (SS-CNIR)

No interaction.

6.3.6 Connected Name Identification Presentation (SS-CONP)

No interaction.

6.3.7 Completion of Calls to Busy Subscriber (SS-CCBS)

No interaction.

6.3.8 Completion of Calls on No Reply (SS-CCNR)

No interaction.

6.3.9 Call Transfer (SS-CT)

No interaction.

--`,,`-`-`,,`,,`,`,,`---

© ISO/IEC 2002 – All rights reserved

Copyright International Organization for Standardization
Provided by IHS under license with ISO
No reproduction or networking permitted without license from IHS
Not for Resale

6.3.10 Call Forwarding Unconditional (SS-CFU)

Call forwarding shall not apply for Short Message Service.

6.3.11 Call Forwarding Busy (SS-CFB)

Call forwarding shall not apply for Short Message Service.

6.3.12 Call Forwarding No Reply (SS-CFNR)

Call forwarding shall not apply for Short Message Service.

6.3.13 Call Deflection (SS-CD)

Call deflection shall not apply for Short Message Service.

6.3.14 Path Replacement (ANF-PR)

No interaction.

6.3.15 Call Offer (SS-CO)

No interaction.

6.3.16 Call Intrusion (SS-CI)

No interaction.

6.3.17 Do Not Disturb (SS-DND)

Do Not Disturb shall not apply for Short Message Service.

6.3.18 Do Not Disturb Override (SS-DNDO)

No interaction.

6.3.19 Advice of Charge (SS-AOC)

No interaction.

6.3.20 Recall (SS-RE)

No interaction.

6.3.21 Call Interception (ANF-CINT)

Call Interception shall not apply for Short Message Service.

6.3.22 Transit Counter (ANF-TC)

No interaction.

6.3.23 Route Restriction Class (ANF-RRC)

No interaction.

6.3.24 Message Waiting Indication (SS-MWI)

The Message Centre may act as a sending entity for Short Messages and Commands and as a storage entity for Short Messages and shall indicate the reception of new Short Messages to the Receiving User.

6.3.25 Wireless Terminal Location Registration (SS-WTLR)

No interaction.

NOTE 6 - A Short Message may be directed to the new location.

6.3.26 Wireless Terminal Mobility Incoming Call (ANF-WTMI)

No interaction.

6.3.27 Wireless Terminal Mobility Outgoing Call (ANF-WTMO)

No interaction.

6.3.28 Authentication of a WTM user (SS-WTAT)

No interaction.

6.3.29 Authentication of the PISN (SS-WTAN)

No interaction.

© ISO/IEC 2002 – All rights reserved
Copyright International Organization for Standardization
Provided by IHS under license with ISO
No reproduction or networking permitted without license from IHS
Not for Resale

6.3.30 Private User Mobility Incoming Call (ANF-PUMI)

No interaction.

6.3.31 Private User Mobility Outgoing Call (ANF-PUMO)

No interaction.

6.3.32 Private User Mobility Registration (SS-PUMR)

No interaction.

6.3.33 Common Information (ANF-CMN)

No interaction.

6.3.34 Call Priority Interruption (Protection) (SS-CPI(P))

No interaction.

6.3.35 Single Step Call Transfer (SS-SSCT)

No interaction.

6.3.36 Simple Dialog (SS-SD)

No interaction.

6.3.37 Call Identification and Call Linkage (ANF-CIDL)

No interaction.

6.4 Interworking considerations

A Service Centre may be connected to other networks than a PISN and receive Short Messages from and send Short Messages to the other networks.

© ISO/IEC 2002 – All rights reserved

Copyright International Organization for Standardization
Provided by IHS under license with ISO
No reproduction or networking permitted without license from IHS
Not for Resale

6.5 Overall SDL

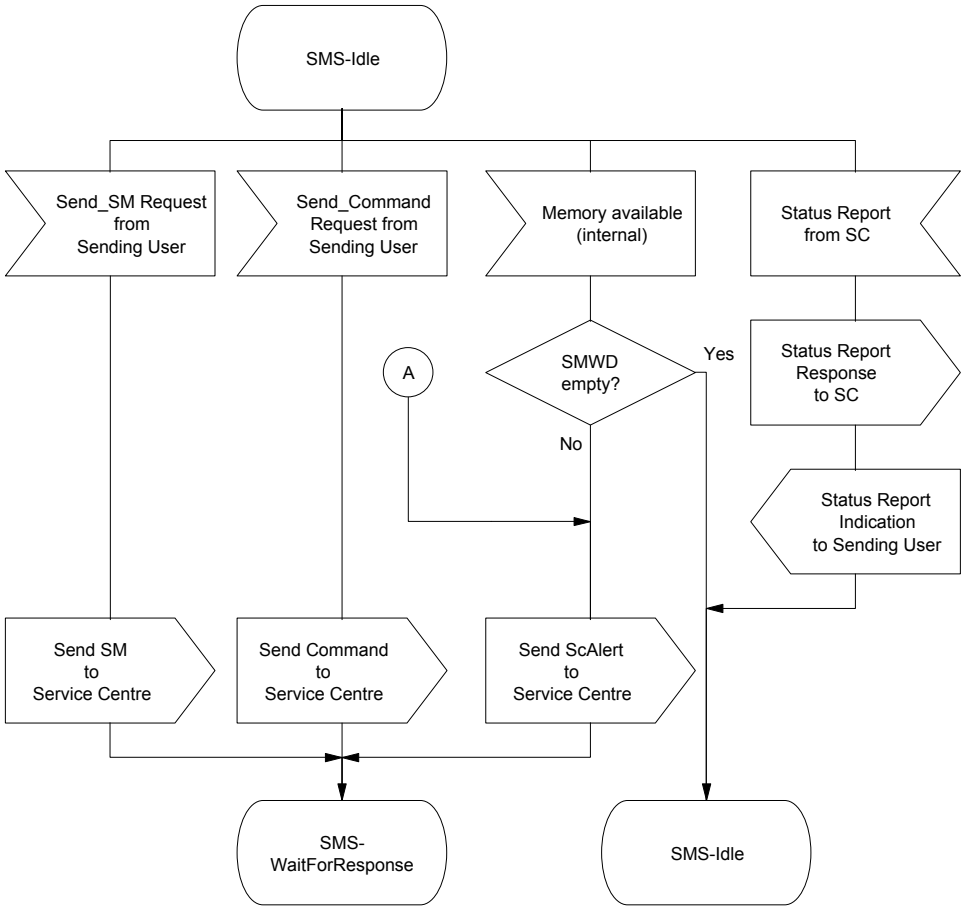

Figure 1 - Overall SDL (sheet 1 of 3)

© ISO/IEC 2002 – All rights reserved
Copyright International Organization for Standardization
Provided by IHS under license with ISO
No reproduction or networking permitted without license from IHS
Not for Resale

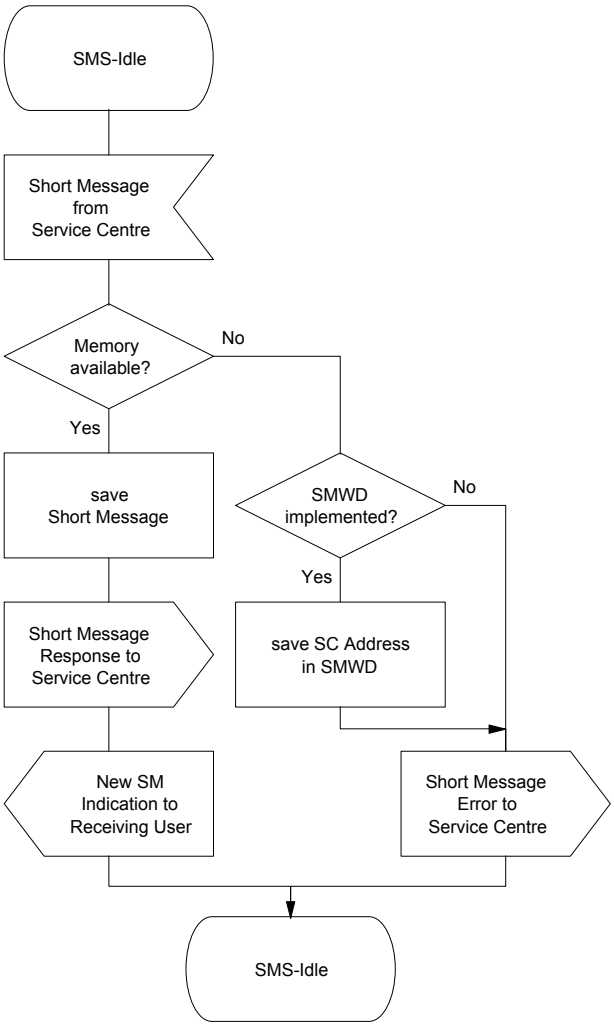

Figure 2 - Overall SDL (sheet 2 of 3)

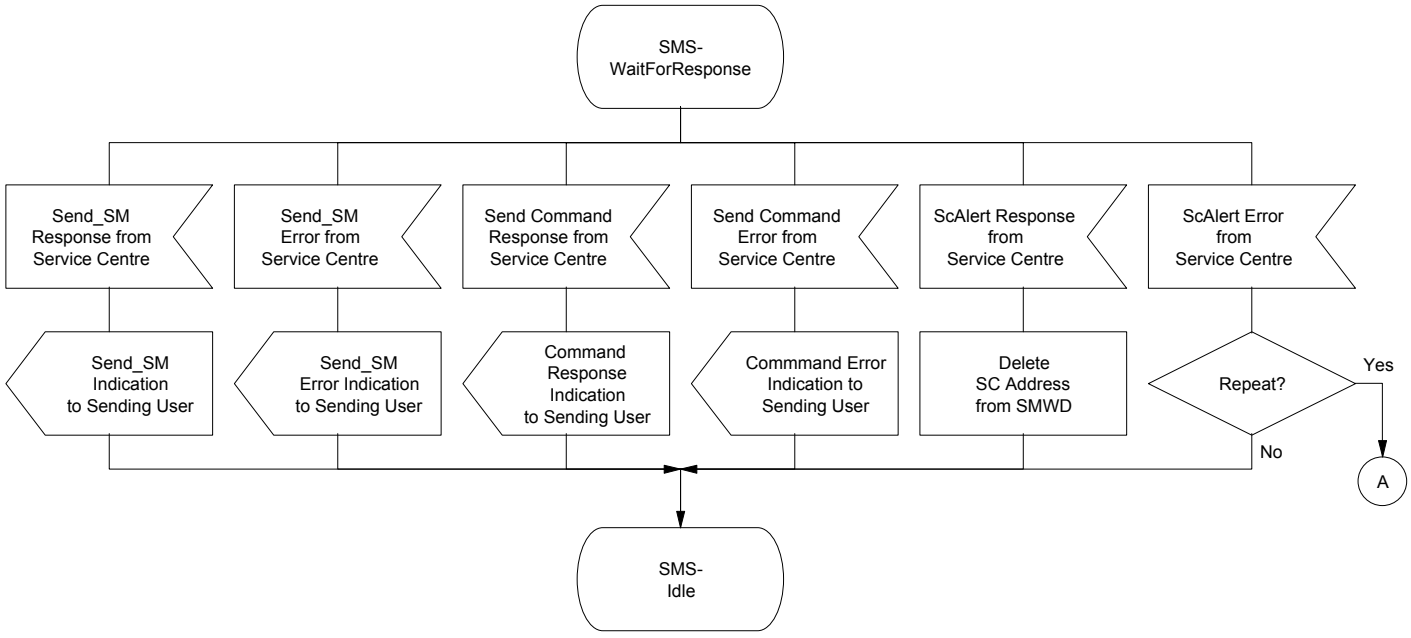

Figure 3 - Overall SDL (sheet 3 of 3)

© ISO/IEC 2002 – All rights reserved
Copyright International Organization for Standardization
Provided by IHS under license with ISO
No reproduction or networking permitted without license from IHS
Not for Resale

7 Short Message Service stage 2 description

7.1 Functional model

7.1.1 Functional model description

The functional model shall comprise the following Functional Entities (FEs):

FE1 Short Message Sending User Agent

FE2 Sending User Service Control Entity

FE3 Service Centre Control Entity

FE4 Receiving User Service Control Entity

FE5 Short Message Receiving User Agent

FE6 Sending User Message Centre

FE7 Receiving User Message Centre

The following relationships shall exist between these FEs:

ra between FE1 and FE2

rb between FE2 and FE3 and FE6 and FE3

rc between FE3 and FE4 and FE4 and FE7

rd between FE4 and FE5

Figure 4 shows these FEs and relationships.

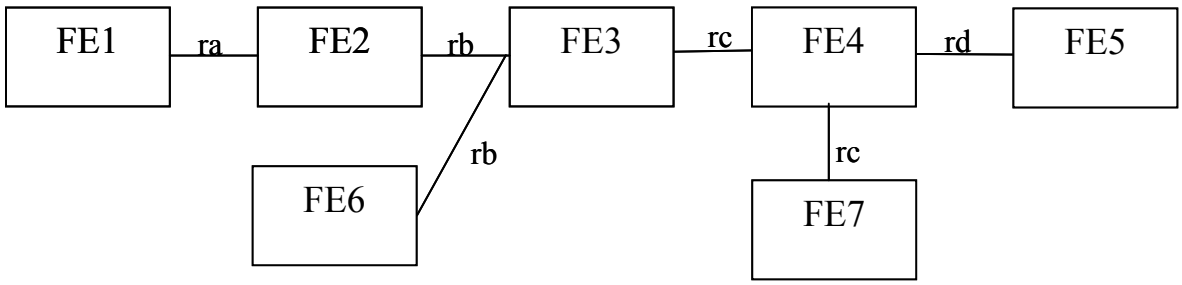

Figure 4 - Functional Entities

7.1.2 Description of Functional Entities

7.1.2.1 Short Message Sending User Agent, FE1

This Functional Entity:

- submits the Short-Message-Text and optional elements to FE2;
- submits Command elements to FE2;
- receives Submit Confirmations for sent SMs or Commands from FE2;
- receives Status Reports from FE2;
- submits Delivery Confirmation elements for received Status Reports to FE2.

7.1.2.2 Sending User Service Control Entity, FE2

This Functional Entity:

- composes Short Messages using the Short-Message-Text and optional elements from FE1, adding additional elements if necessary, and sends them to FE3;
- composes Commands using the elements from FE1, adding additional elements if necessary, and sends them to FE3;
- receives Submit Confirmations and Status Reports from FE3;

© ISO/IEC 2002 – All rights reserved
Copyright International Organization for Standardization
Provided by IHS under license with ISO
No reproduction or networking permitted without license from IHS
Not for Resale

- sends Submit Confirmations and Status Reports to FE1;
- receives Delivery Confirmation elements from FE1 and sends them to FE3.

7.1.2.3 Service Centre Control Entity, FE3

This Functional Entity:

- receives Short Messages from FE2 or FE6, stores them and attempts to deliver them to FE4 until the Validity Period expires;
- composes and sends Submit Confirmations and Status Reports to FE2 or FE6;
- deletes Short Messages when the Validity Period is expired;
- receives Commands from FE2 or FE6 and executes them on the Short Messages given in the Command Data if they are still available in the SC;
- receives Delivery Confirmations from FE4 and
- optionally, receives SC-Alerts from FE4.

7.1.2.4 Receiving User Service Control Entity, FE4

This Functional Entity:

- receives Short Messages from FE3;
- sends the Short-Message-Text and optional elements to FE5 or
- sends the Short Messages to FE7;
- receives Delivery Confirmations from FE5 or FE7 and sends them to FE3 and

in the Terminal Case, optionally

- keeps a list of SC (SMWD) which attempted to deliver a Short Message while the Receiving User was not reachable and
- sends ScAlert messages to FE3 or

in the Message Centre Case, optionally

- receives ScAlerts from FE7 and sends them to FE3.

7.1.2.5 Short Message Receiving User Agent, FE5

This Functional Entity:

- receives Short-Message-Text and optional elements from FE4;
- submits Delivery Confirmation elements to FE4;
- delivers the Short Message to the Receiving User.

7.1.2.6 Sending User Message Centre, FE6

This Functional Entity

- receives Short Message or Command elements;
- composes and sends Short Messages to FE3;
- composes and sends Commands to FE3;
- receives Submit Confirmations from FE3;
- receives Status Reports from FE3;
- sends Delivery Confirmations to FE3.

7.1.2.7 Receiving User Message Centre, FE7

This Functional Entity:

- receives Short Messages from FE4 and stores them;
- submits Delivery Confirmations to FE4;

© ISO/IEC 2002 – All rights reserved

Copyright International Organization for Standardization
Provided by IHS under license with ISO
No reproduction or networking permitted without license from IHS
Not for Resale

- indicates the reception of a new Short Message to the Receiving User and

in the Message Centre Case, optionally

- keeps a list of SC (SMWD) which attempted to deliver a Short Message while the Receiving User was not reachable and sends SC-Alert messages to FE4.

7.1.3 Relationship of functional model to Basic Call functional model

No relationship between functional model and basic call functional model.

7.2 Information flows

7.2.1 Definition of information flows

In the tables listing the elements in information flows, the column headed “Request” indicates which of these elements are mandatory (M) and which are optional (O) in a request/indication information flow, and the column headed “Confirm” (confirmed information flows only) indicates which of these elements are mandatory (M) and which are optional (O) in a response/confirmation information flow.

Further descriptions of the PDU elements can be found in annex A.

7.2.1.1 ra_SmsSubmit

ra_SmsSubmit is a confirmed information flow across ra from FE1 to FE2 used to submit Short Message elements from the Short Message Sending User Agent to the Sending User Service Control Entity. Table 1 lists the elements within the ra_SmsSubmit information flow.

Table 1 - Contents of ra_SmsSubmit

Element	Request	Confirm
Receiving User’s number	M	
Sending User’s number	O	
Short Message Reference	O	
Protocol Identifier	O	O
Status-Report-Request	O	
Reply-Path	O	
Reject-Duplicates	O	
Class	O	O
Compressed	O	O
Short-Message-Text	M	O (Note 7)
Validity-Period	O	
User Data Header	O	O (Note 7)
SMSC Control Parameters	O	O
Service-Centre-Time- Stamp		M

NOTE 7 - This element is only available in an SmsSubmit response/ confirmation for use by the Service Centre.

© ISO/IEC 2002 – All rights reserved
Copyright International Organization for Standardization
Provided by IHS under license with ISO
No reproduction or networking permitted without license from IHS
Not for Resale

7.2.1.2 rb_SmsSubmit

rb_SmsSubmit is a confirmed information flow across rb from FE2 to FE3 or from FE6 to FE3 used to submit the Short Message from the Sending User Service Control Entity or Sending User Message Centre, respectively, to the Service Centre Entity. Table 2 lists the elements within the rb_SmsSubmit information flow.

Table 2 - Contents of rb_SmsSubmit

Element	Request	Confirm
Receiving User's number	M	
Sending User's number	M	
Short Message Reference	M	
Protocol Identifier	M	O
Status-Report-Request	M	
Reply-Path	M	
Reject-Duplicates	M	
Class	O	O
Compressed	M	O
Short-Message-Text	M	O (Note 8)
Validity-Period	O	
User Data Header	O	O (Note 8)
Service-Centre-Time-Stamp		M

NOTE 8 - This element is only available in an SmsSubmit response/ confirmation for use by the Service Centre.

© ISO/IEC 2002 – All rights reserved

Copyright International Organization for Standardization
Provided by IHS under license with ISO
No reproduction or networking permitted without license from IHS
Not for Resale

7.2.1.3 rc_SmsDeliver

rc_SmsDeliver is a confirmed information flow across rc from FE3 to FE4 or from FE4 to FE7 used to submit the Short Message from the Service Centre Entity to the Receiving User Service Control Entity and from the Receiving User Service Control Entity to the Receiving User Message Centre. Table 3 lists the elements within the rc_SmsDeliver information flow.

Table 3 - Contents of rc_SmsDeliver

Element	Request	Confirm
Sending User's number	M	
Receiving User's number	M	
Protocol Identifier	M	O
Service-Centre-Time-Stamp	M	
Priority	M	
More-Messages-to-Send	M	
Status-Report-Indication	M	
Reply-Path	M	
Class	O	O
Compressed	M	O
Short-Message-Text	M	O (Note 9)
User Data Header	O	O (Note 9)
Sending User's name	O	

NOTE 9 - This element is only available in an SmsDeliver response/ confirmation for use by the Receiving User entity.

--`,,,`-`-`,,`,,`,`,,`---

© ISO/IEC 2002 – All rights reserved
Copyright International Organization for Standardization
Provided by IHS under license with ISO
No reproduction or networking permitted without license from IHS
Not for Resale

7.2.1.4 rd_SmsDeliver

rd_SmsDeliver is a confirmed information flow across rd from FE4 to FE5 used to submit the Short Message from the Receiving User Service Control Entity to the Short Message Receiving User Agent. Table 4 lists the elements within the rd_SmsDeliver information flow.

Table 4 - Contents of rd_SmsDeliver

Element	Request	Confirm
Sending User's number	M	
Receiving User's number	O	
Protocol Identifier	O	O
Service-Centre-Time- Stamp	O	
Priority	O	
More-Messages-to-Send	O	
Status-Report-Indication	O	
Reply-Path	O	
Class	O	O
Compressed	O	O
Short-Message-Text	M	O (Note 10)
User Data Header	O	O (Note 10)
Sending User's name	O	

NOTE 10 - This element is only available in an SmsDeliver response/ confirmation for use by the Receiving User entity.

--`,,`-`-`,,`,,`,`,,`---

© ISO/IEC 2002 – All rights reserved

Copyright International Organization for Standardization
Provided by IHS under license with ISO
No reproduction or networking permitted without license from IHS
Not for Resale

7.2.1.5 ra_SmsStatusReport

ra_SmsStatusReport is a confirmed information flow across ra from FE2 to FE1 used to submit a Status Report from the Sending User Service Control Entity to the Short Message Sending User Agent. Table 5 lists the elements within the ra_SmsStatusReport information flow.

Table 5 - Contents of ra_SmsStatusReport

Element	Request	Confirm
Short Message Reference	O (Note 11)	
Service-Centre-Time-Stamp	M	
Discharge-Time	M	
Receiving User's number	M	
Destination Address	M	
Status	M	
Priority	O	
More-Messages-to-Send	O	
Status-Report-Qualifier	O	
Receiving User's Name	O	
Protocol Identifier	O	O
Class	O	O
Compressed	O	O
Short-Message-Text	O	O (Note 12)
User Data Header	O	O (Note 12)

NOTE 11 - Where the SmsStatusReport is the result of an SmsCommand and the Command Type was an Enquiry, the Short Message Reference returned in the SmsStatusReport shall be the Short Message Number which was sent in the SmsCommand (i.e. the Short Message Reference of the previously submitted Short Message to which the Enquiry refers).

NOTE 12 - This element is only available in an SmsStatusReport response/ confirmation for use by the Receiving User entity.

© ISO/IEC 2002 – All rights reserved
Copyright International Organization for Standardization
Provided by IHS under license with ISO
No reproduction or networking permitted without license from IHS
Not for Resale

7.2.1.6 rb_SmsStatusReport

rb_SmsStatusReport is a confirmed information flow across rb from FE3 to FE2 or from FE3 to FE6 used to submit a Status Report from the Service Centre Entity to the Sending User Service Control Entity and from the Service Centre Entity to the Sending User Message Centre. Table 6 lists the elements within the rb_SmsStatusReport information flow.

Table 6 - Contents of rb_SmsStatusReport

Element	Request	Confirm
Short Message Reference	M (Note 13)	
Service-Centre-Time-Stamp	M	
Discharge-Time	M	
Receiving User's address	M	
Destination Address	M	
Status	M	
Priority	M	
More-Messages-to-Send	M	
Status-Report-Qualifier	M	
Receiving User's Name	O	
Protocol Identifier	O	O
Class	O	O
Compressed	O	O
Short-Message-Text	O	O (Note 14)
User Data Header	O	O (Note 14)

NOTE 13 - Where the SmsStatusReport is the result of an SmsCommand and the Command Type was an Enquiry, the Short Message Reference returned in the SmsStatusReport shall be the Short Message Number which was sent in the SmsCommand (i.e. the Short Message Reference of the previously submitted Short Message to which the Enquiry refers).

NOTE 14 - This element is only available in an SmsStatusReport response/ confirmation for use by the Receiving User entity.

--`,,`--`,,`,`,,`,`,,`---

© ISO/IEC 2002 – All rights reserved

Copyright International Organization for Standardization
Provided by IHS under license with ISO
No reproduction or networking permitted without license from IHS
Not for Resale

7.2.1.7 ra_SmsCommand

ra_SmsCommand is a confirmed information flow across ra from FE1 to FE2 used to transfer a Command from the Short Message Sending User Agent to the Sending User Service Control Entity. Table 7 lists the elements within the ra_SmsCommand information flow.

Table 7 - Contents of ra_SmsCommand

Element	Request	Confirm
Receiving User's address	M	
Short Message Reference	O	
Short Message Number	M	
Protocol Identifier	M	O
Command-Type	M	
Command-Data	O	
Status-Report-Request	O	
Service-Centre-Time-Stamp		M
Short-Message-Text		O (Note 15)
Class		O
Compressed		O
User Data Header		O (Note 15)

NOTE 15 - This element is only available in an SmsCommand response/ confirmation for use by Service Centre.

--`,,,`-`-`,,`,,`,`,,`---
© ISO/IEC 2002 – All rights reserved
Copyright International Organization for Standardization
Provided by IHS under license with ISO
No reproduction or networking permitted without license from IHS
Not for Resale

7.2.1.8 rb_SmsCommand

rb_SmsCommand is a confirmed information flow across rb from FE2 to FE3 or FE6 to FE3 used to transfer a Command from the Sending User Service Control Entity to the Service Centre Entity and from the Sending User Message Centre to the Service Centre Control Entity, respectively. Table 8 lists the elements within the rb_SmsCommand information flow.

Table 8 - Contents of rb_SmsCommand

Element	Request	Confirm
Receiving User's address	M	
Short Message Reference	M	
Short Message Number	M	
Protocol Identifier	M	O
Command-Type	M	
Command-Data	O	
Status-Report-Request	O	
Service-Centre-Time-Stamp		M
Short-Message-Text		O (Note 16)
Class		O
User Data Header		O (Note 16)
Compressed		O

NOTE 16 - This element is only available in an SmsCommand response/ confirmation for use by Service Centre.

7.2.1.9 rd_ScAlert

rd_ScAlert is a confirmed information flow across rd from FE5 to FE4 used to transfer a ScAlert from the Short Message Receiving User Agent to the Receiving User Service Control Entity. Table 9 lists the elements within the rd_ScAlert information flow.

Table 9 - Contents of rd_ScAlert

Element	Request	Confirm
Sending User's number	O	O

7.2.1.10 rc_ScAlert

rc_ScAlert is a confirmed information flow across rc from FE4 to FE3 or from FE7 to FE4 used to transfer a ScAlert from the Receiving User Service Control Entity to the Service Centre Entity and from the Receiving User Message Centre to the Receiving User Service Control Entity, respectively. Table 10 lists the elements within the rc_ScAlert information flow.

Table 10 - Contents of rc_ScAlert

Element	Request	Confirm
Sending User's number	M	M

© ISO/IEC 2002 – All rights reserved

Copyright International Organization for Standardization
Provided by IHS under license with ISO
No reproduction or networking permitted without license from IHS
Not for Resale

7.2.1.11 smsDeliverError

smsDeliverError is an unconfirmed information flow across rc from FE4 to FE3 and rd from FE5 to FE4 or rc from FE7 to FE4 used to transfer an error indication due to the Short Message Receiving User Agent or the Receiving User Message Centre not being able to save a received rd_SmsDeliver/ rc_SmsDeliver. Table 11 lists the elements within the smsDeliverError information flow.

Table 11 - Contents of smsDeliverError

Element	Request
failureCause	M
protocolIdentifier	O
userDataHeader	O (Note 17)
class	O
compressed	O
shortMessageText	O (Note 17)
scAddressSaved	M

NOTE 17 - This element is only available in an smsDeliverError request for use by the Receiving User entity.

7.2.2 Information flow sequences

A stage 3 standard for SS-SMS shall provide signalling procedures in support of the information flow sequences specified in the figures. In addition, signalling procedures should be provided to cover sequences arising from error situations, interactions with Basic Calls, interactions with other supplementary services, different topologies etc.

Within a column representing an SS-SMS Functional Entity, the numbers refer to Functional Entity actions listed in 7.3.

7.2.2.1 Submission of a Short Message

Figure 5 shows in generic form the information flow sequence for submission of a Short Message when in the case when the Short Messages are stored in and sent from a Terminal.

© ISO/IEC 2002 – All rights reserved
Copyright International Organization for Standardization
Provided by IHS under license with ISO
No reproduction or networking permitted without license from IHS
Not for Resale

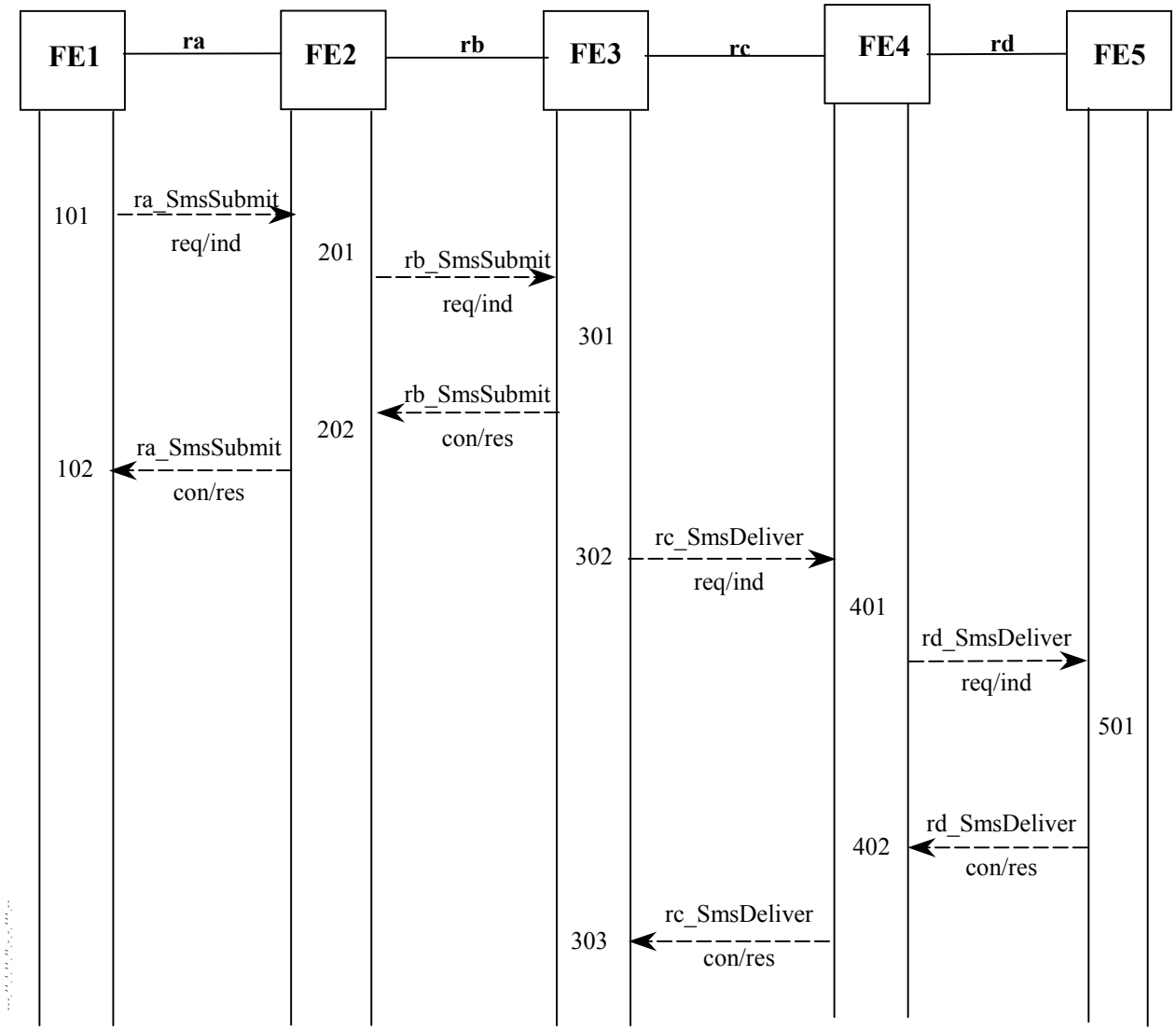

Figure 5 - Information flow sequence for Short Message Transfer, Terminal-case

© ISO/IEC 2002 – All rights reserved

Copyright International Organization for Standardization
Provided by IHS under license with ISO
No reproduction or networking permitted without license from IHS
Not for Resale

Figure 6 shows in generic form the information flow sequence for submission of a Short Message from FE6 to FE7.

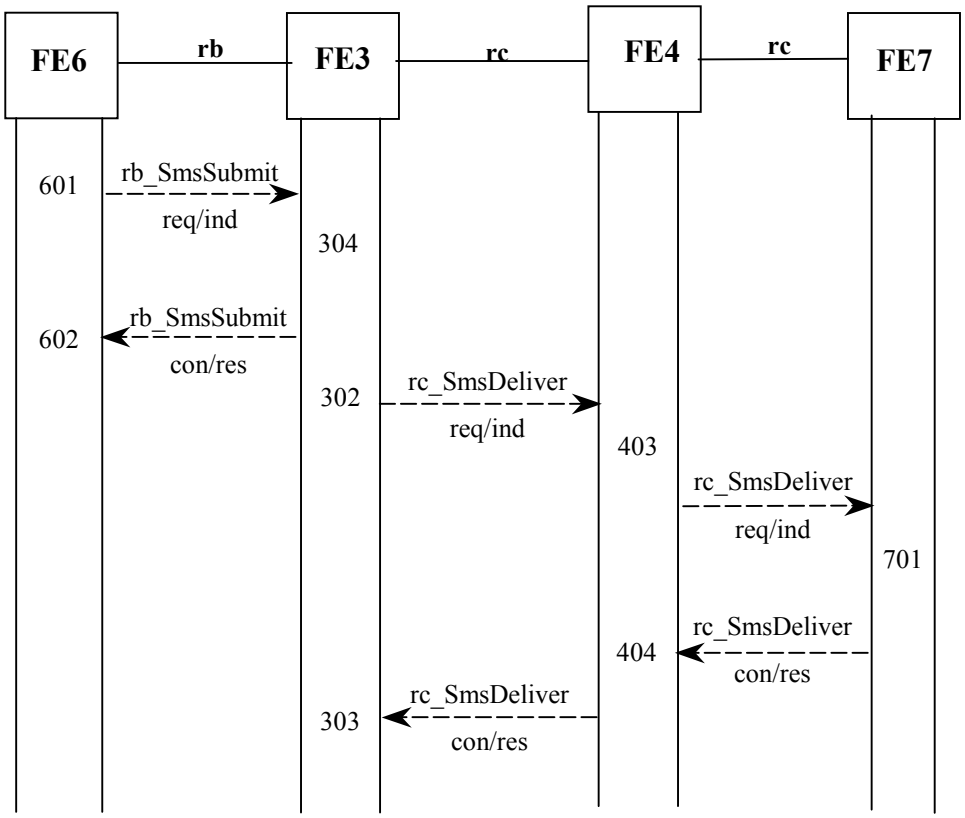

Figure 6 - Information flow sequence for Short Message transfer - Message-Centre-case

7.2.2.2 Delivery of a Status Report

Figure 7 shows in generic form the information flow sequence for the submission of a Status Report from FE3 to FE1.

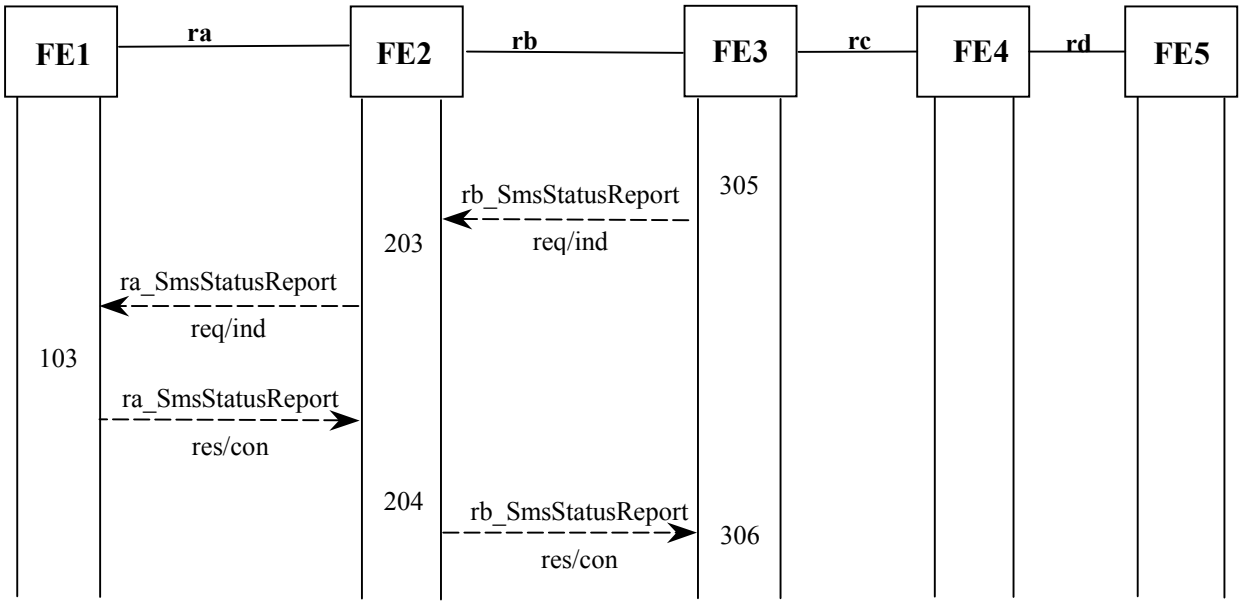

Figure 7 - Information flow sequence for Status Report Transfer - Terminal-case

© ISO/IEC 2002 – All rights reserved
Copyright International Organization for Standardization
Provided by IHS under license with ISO
No reproduction or networking permitted without license from IHS
Not for Resale

Figure 8 shows in generic form the information flow sequence for the submission of a Status Report from FE3 to FE6.

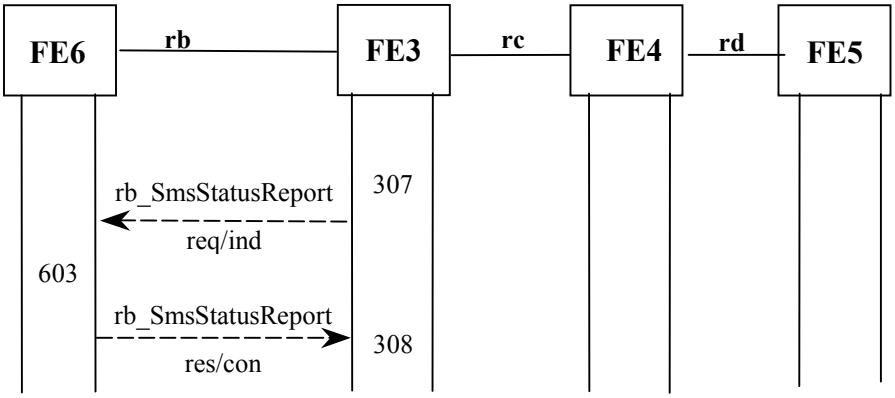

Figure 8 - Information flow sequence for Status Report Transfer - Message-Centre-case

7.2.2.3 Transfer of an SmsCommand

Figure 9 shows in generic form the information sequence flow for the transfer of an SmsCommand from FE1 to FE3.

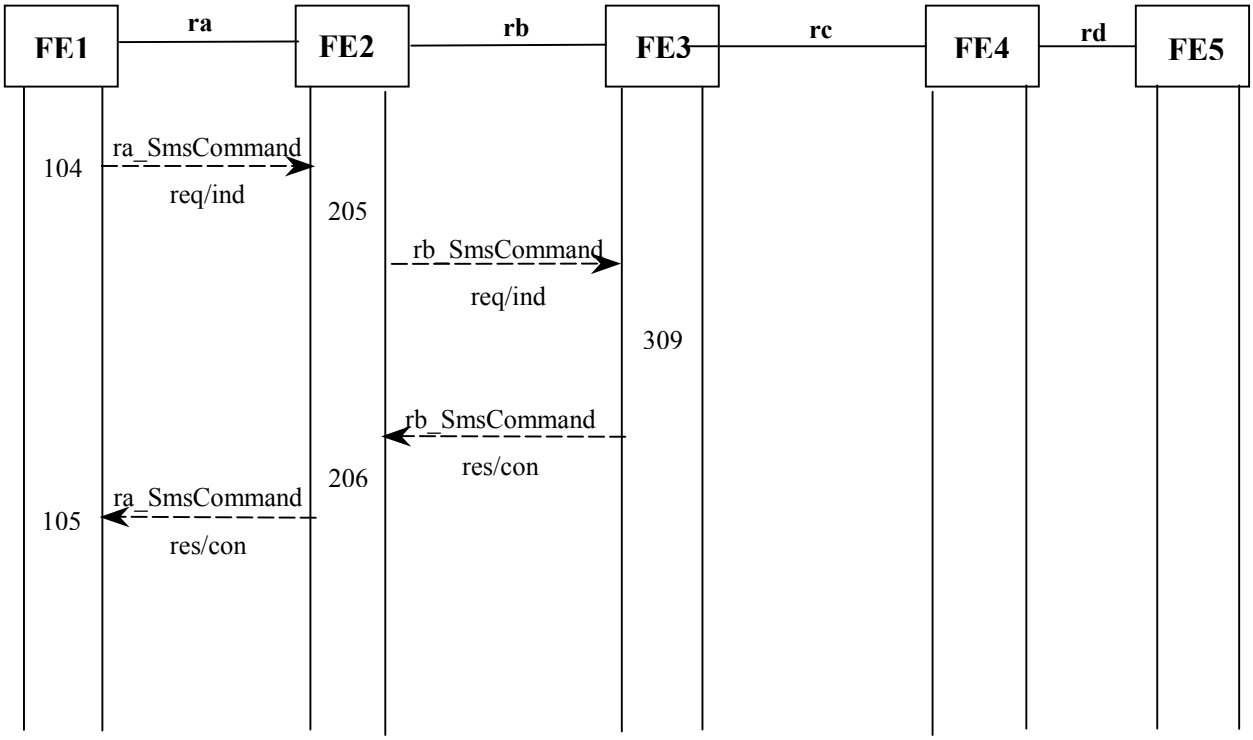

Figure 9 - Information flow sequence for Command Transfer - Terminal-case

© ISO/IEC 2002 – All rights reserved

Copyright International Organization for Standardization
Provided by IHS under license with ISO
No reproduction or networking permitted without license from IHS
Not for Resale

Figure 10 shows in generic form the information flow sequence for the submission of a Command from FE6 to FE3.

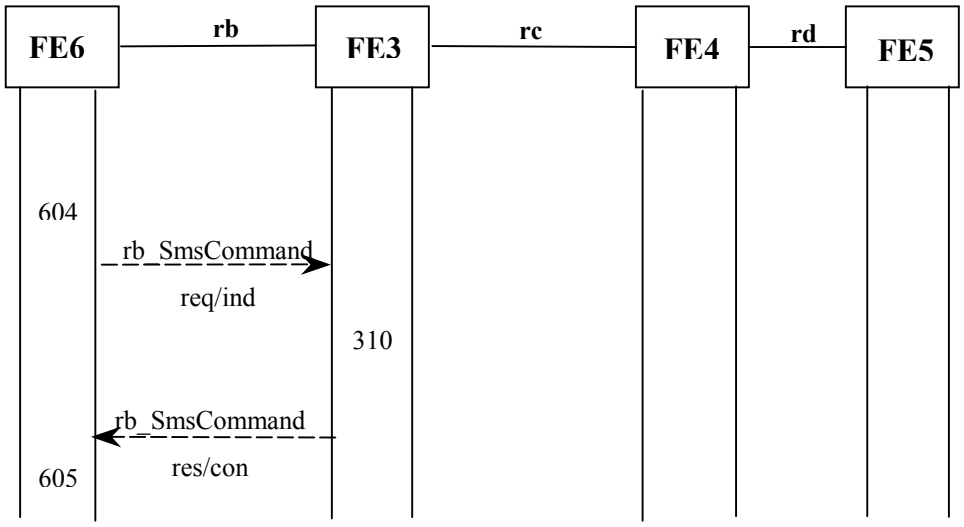

Figure 10 - Information flow sequence for Command Transfer - Message-Centre-case

7.2.2.4 Unsuccessful Transfer of an SmsDeliver and following transfer of an ScAlert

Figure 11 shows in generic form the information flow sequence for the transfer of an ScAlert from FE4 to FE3.

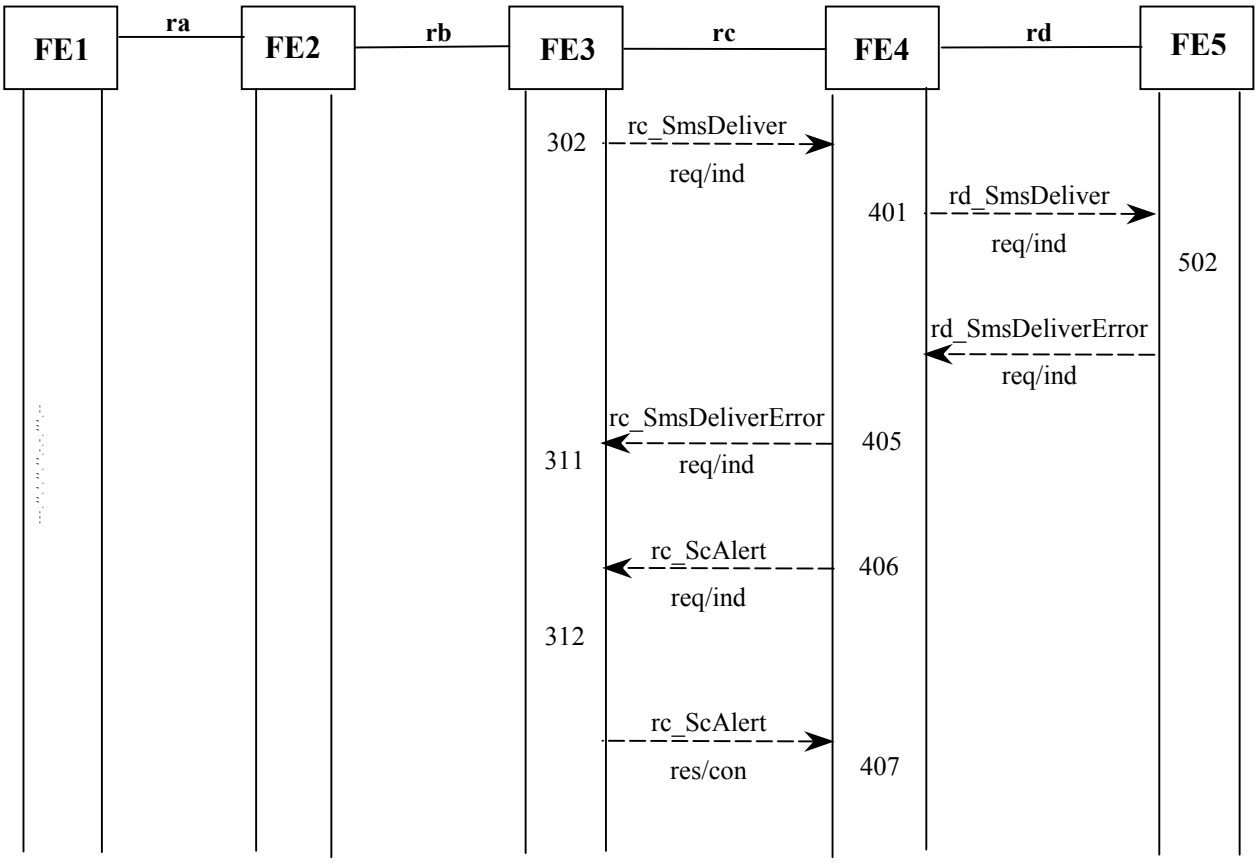

Figure 11 - Information flow sequence for ScAlert Transfer - Terminal-case

© ISO/IEC 2002 – All rights reserved
Copyright International Organization for Standardization
Provided by IHS under license with ISO
No reproduction or networking permitted without license from IHS
Not for Resale

Figure 12 shows in generic form the information flow sequence for the transfer of an ScAlert from FE7 to FE3.

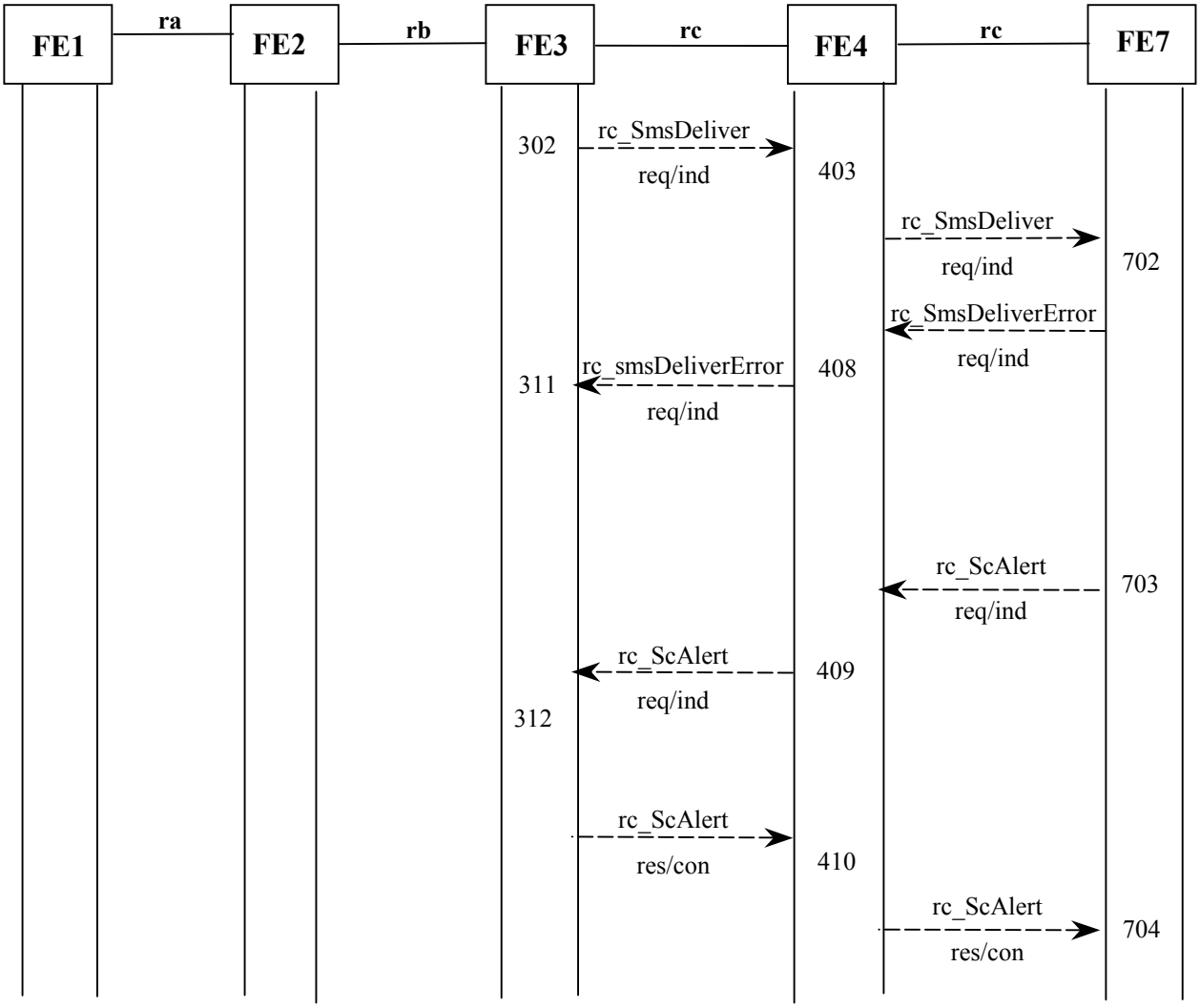

Figure 12 - Information flow sequence for ScAlert Transfer - Message-Centre-case

7.3 Functional Entity actions

7.3.1 Functional Entity actions of FE1

101 Send ra_SmsSubmit request/indication to FE2 as received from the user.

102 Receive ra_SmsSubmit response/confirmation from FE2 and deliver it to the user.

103 Receive ra_SmsStatusReport request/indication from FE2 and deliver it to the user. Send ra_SmsStatusReport response/confirmation to FE2.

104 Send ra_SmsCommand request/indication to FE2 as received from the user.

105 Receive ra_SmsCommand response/confirmation from FE2 and deliver it to the user.

7.3.2 Functional Entity actions of FE2

201 Receive ra_SmsSubmit request/indication from FE1, add additional elements if necessary and send rb_SmsSubmit request/indication to FE3.

202 Receive rb_SmsSubmit response/confirmation from FE3 and send ra_SmsSubmit response/confirmation to FE1.

203 Receive rb_SmsStatusReport request/indication from FE3, check the elements and send ra_SmsStatusReport request/indication to FE1.

© ISO/IEC 2002 – All rights reserved

Copyright International Organization for Standardization
Provided by IHS under license with ISO
No reproduction or networking permitted without license from IHS
Not for Resale

204 Receive ra_SmsStatusReport response/confirmation from FE1 and send rb_SmsStatusReport response/confirmation to FE3.

205 Receive ra_SmsCommand request/indication from FE1, add additional elements if necessary and send rb_SmsCommand request/indication to FE3.

206 Receive rb_SmsCommand response/confirmation from FE3 and send ra_SmsCommand response/confirmation to FE1.

7.3.3 Functional Entity actions of FE3

301 Receive rb_SmsSubmit request/indication from FE2, check if parameters are correct and store the Short Message. Send rb_SmsSubmit response/confirmation to FE2.

302 Compose rc_SmsDeliver request/indication message using the stored Short Message data and send it to FE4.

303 Receive rc_SmsDeliver response/confirmation from FE4; this may trigger the sending of rb_SmsStatusReport (see action 305).

304 Receive rb_SmsSubmit request/indication from FE6, check if parameters are correct and store the Short Message. Send rb_SmsSubmit response/confirmation to FE6.

305 If the user requested a Status Report in a previously sent SmsSubmit or SmsCommand then compose rb_SmsStatusReport request/indication message and send it to FE2.

306 Receive rb_SmsStatusReport response/confirmation from FE2.

307 If the user requested a Status Report in a previously sent SmsSubmit or SmsCommand then compose rb_SmsStatusReport request/indication message and send it to FE6.

308 Receive rb_SmsStatusReport response/confirmation from FE6.

309 Receive rb_SmsCommand request/indication from FE2 and action it on the Short Message identified by the elements in the command. Send rb_SmsCommand response/confirmation to FE2.

310 Receive rb_SmsCommand request/indication from FE6 and action it on the Short Message identified by the elements in the command. Send rb_SmsCommand response/confirmation to FE6.

311 Receive rc_SmsDeliverError request/indication from FE4, this may trigger the sending of rb_SmsStatusReport (see action 305).

312 Receive rc_ScAlert request/indication from FE4 and send rc_ScAlert response/confirmation to FE4. If there are Short Messages or Status Reports waiting to be delivered to this Receiving User invoke delivery procedure (see action 302).

7.3.4 Functional Entity actions of FE4

401 Receive rc_SmsDeliver request/indication from FE3, check if elements are correct and send rd_SmsDeliver request/indication to FE5.

402 Receive rd_SmsDeliver response/confirmation from FE5 and send rc_SmsDeliver response/confirmation to FE3.

403 Receive rc_SmsDeliver request/indication from FE3, check if elements are correct and send rc_SmsDeliver request/indication to FE7.

404 Receive rc_SmsDeliver response/confirmation from FE7 and send rc_SmsDeliver response/confirmation to FE3.

405 Receive rd_SmsDeliverError request/indication from FE5 and send rc_SmsDeliverError request/indication to FE3, optionally, save Sc-Address if not saved already.

406 Send rc_ScAlert request/indication to FE3 (only in Terminal Case).

407 Receive rc_ScAlert response/confirmation from FE3 (only in Terminal Case).

408 Receive rc_SmsDeliverError request/indication from FE7 and send rc_SmsDeliverError request/indication to FE3.

409 Receive rd_ScAlert request/indication from FE7, add additional elements if necessary, and send rc_ScAlert request/indication to FE3.

410 Receive rc_ScAlert response/confirmation from FE3 and send rd_ScAlert response/confirmation to FE7.

7.3.5 Functional Entity actions of FE5

501 Receive rd_SmsDeliver request/indication from FE4, deliver the Short Message to the user and send rd_SmsDeliver response/confirmation to FE4.

© ISO/IEC 2002 – All rights reserved
Copyright International Organization for Standardization
Provided by IHS under license with ISO
No reproduction or networking permitted without license from IHS
Not for Resale

502 Receive rd_SmsDeliver request/indication from FE4. If the received Short Message cannot be saved, then send rd_SmsDeliverError request/indication to FE4.

7.3.6 Functional Entity actions of FE6

601 On request of the user send rb_SmsSubmit request/ indication to FE3.

602 Receive rb_SmsSubmit response/ confirmation from FE3 and indicate result to the user.

603 Receive rb_SmsStatusReport request/indication from FE3 and indicate it to the user. Send rb_SmsStatusReport response/confirmation to FE3.

604 On user request send rb_SmsCommand request/indication to FE3.

605 Receive rb_SmsCommand response/confirmation from FE3 and indicate result to the user.

7.3.7 Functional Entity actions of FE7

701 Receive rc_SmsDeliver request/indication from FE4, store the Short Message if possible, indicate the reception of the new message to the user and send rc_SmsDeliver response/confirmation to FE4.

702 Receive rc_SmsDeliver request/indication from FE4. If it is not possible to store the Short Message send rc_SmsDeliverError request/indication to FE4 and optionally, save SC-Address if not saved already.

703 On an internal indication send an rc_ScAlert request/indication to FE4.

704 Receive an rc_ScAlert response/confirmation from FE4.

7.4 Functional Entity behaviour

The FE behaviours shown below are intended to illustrate typical FE behaviour in terms of information flows sent and received. The behaviour of each FE is shown using the Specification and Description Language (SDL) defined in ITU-T Rec. Z.100 (1999).

--`,,`-`-`,,`,,`,`,,`---
© ISO/IEC 2002 – All rights reserved

Copyright International Organization for Standardization
Provided by IHS under license with ISO
No reproduction or networking permitted without license from IHS
Not for Resale

7.4.1 Behaviour of FE1

Figure 13 shows the normal behaviour of FE1. Output signals to the left and input signals from the left represent primitives to and from the Sending User. Output signals to the right and input signals from the right represent information flows to and from FE2.

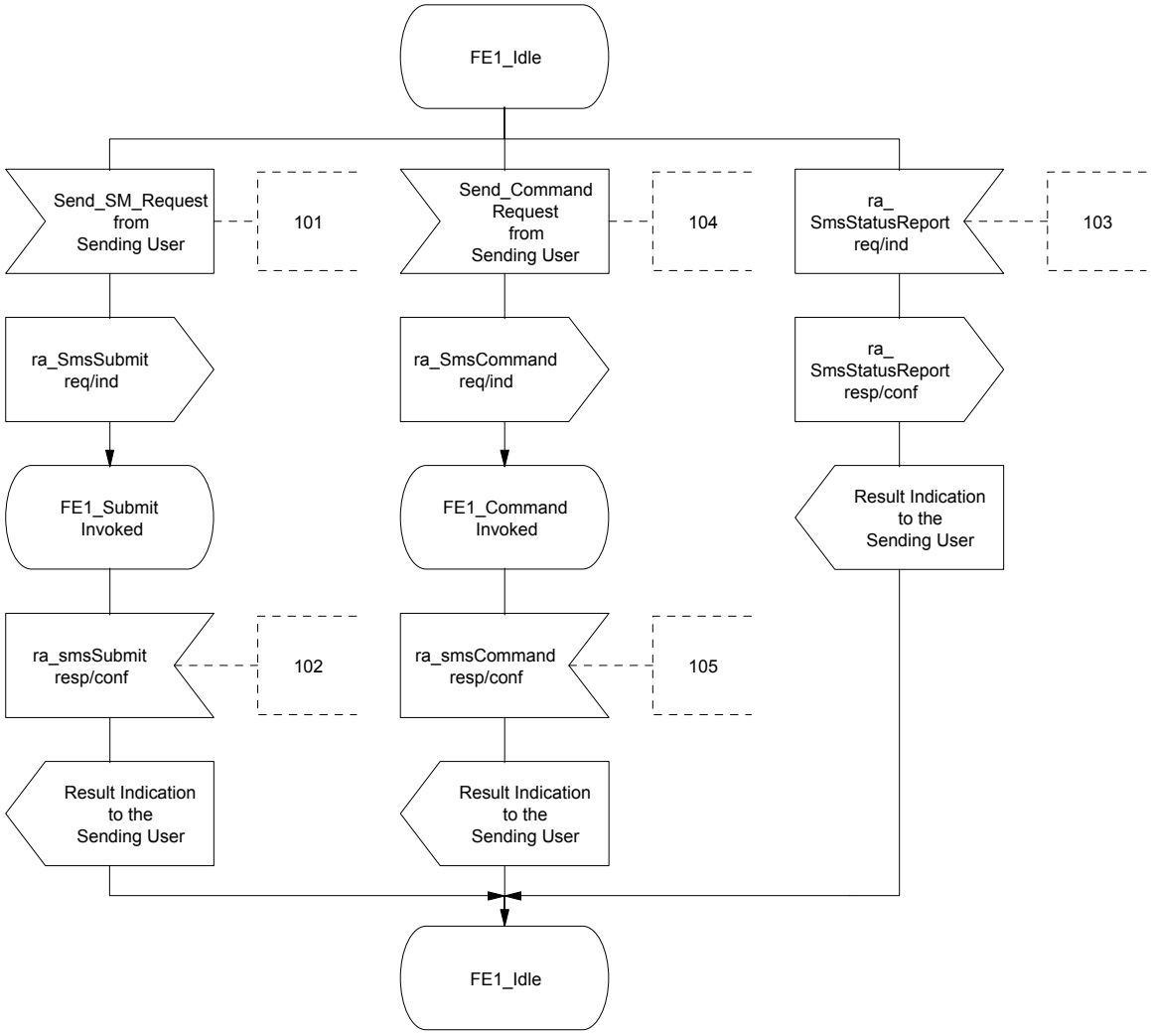

Figure 13 - SMS, SDL for Functional Entity 1

© ISO/IEC 2002 – All rights reserved
Copyright International Organization for Standardization
Provided by IHS under license with ISO
No reproduction or networking permitted without license from IHS
Not for Resale

7.4.2 Behaviour of FE2

Figure 14 shows the normal behaviour of FE2. Output signals to the left and input signals from the left represent information flows to and from FE1. Output signals to the right and input signals from the right represent information flows to and from FE3.

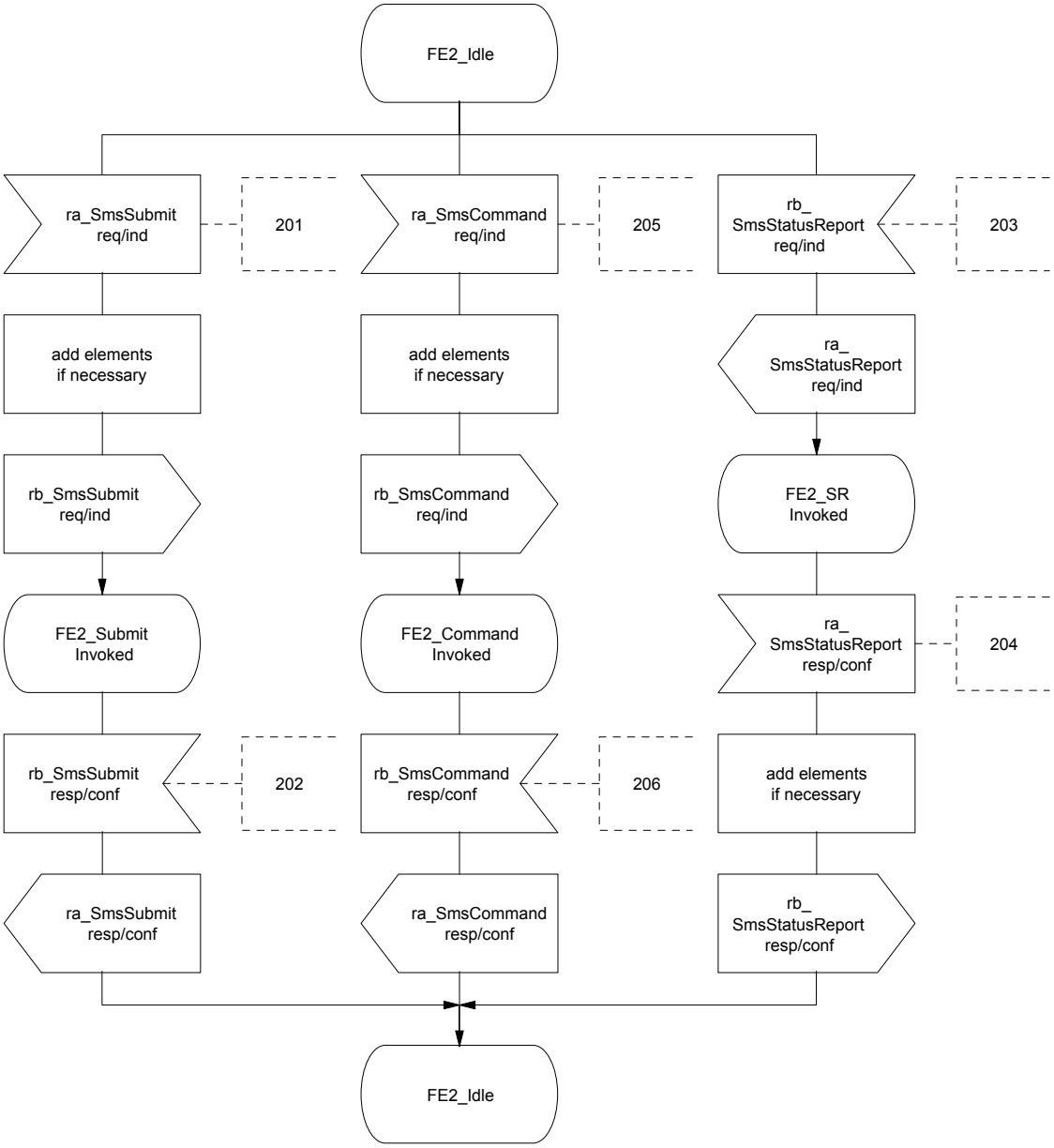

Figure 14 - SMS, SDL for Functional Entity 2

7.4.3 Behaviour of FE3

Figure 15 and figure 16 show the normal behaviour of FE3. Output signals to the left and input signals from the left represent information flows to and from FE2 or FE6. Output signals to the right and input signals from the right represent information flows to and from FE4.

© ISO/IEC 2002 – All rights reserved

Copyright International Organization for Standardization
Provided by IHS under license with ISO
No reproduction or networking permitted without license from IHS
Not for Resale

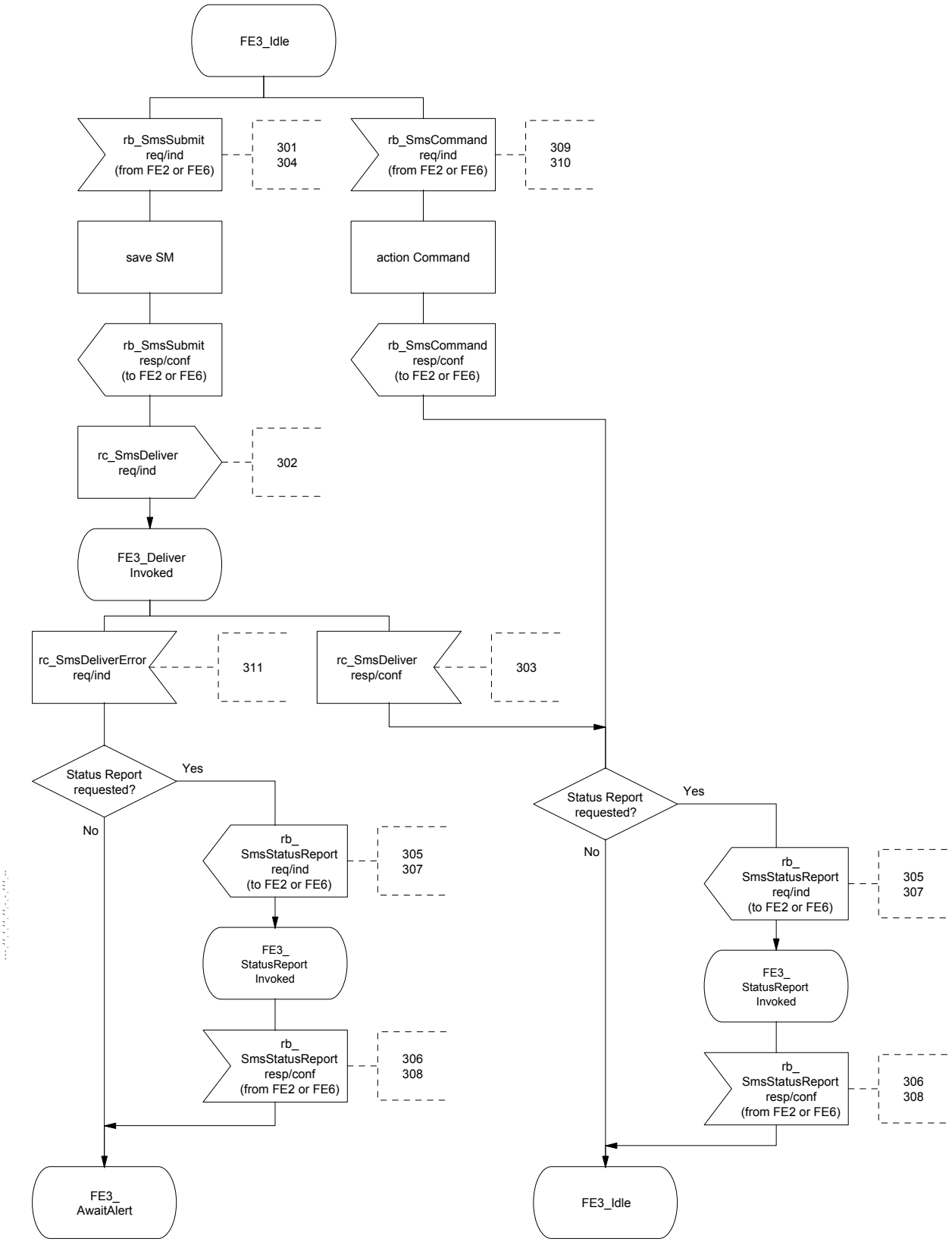

Figure 15 - SMS, SDL of Functional Entity 3 (sheet 1 of 2)

© ISO/IEC 2002 – All rights reserved
Copyright International Organization for Standardization
Provided by IHS under license with ISO
No reproduction or networking permitted without license from IHS
Not for Resale

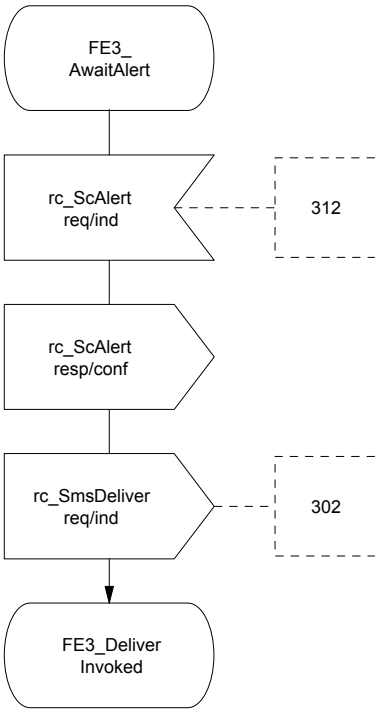

Figure 16 - SMS, SDL for Functional Entity 3 (sheet 2 of 2)

7.4.4 Behaviour of FE4

7.4.4.1 Message Centre case

Figure 17 and figure 18 show the normal behaviour of FE4. Output signals to the left and input signals from the left represent information flows to and from FE3. Output signals to the right and input signals from the right represent information flows to and from FE7.

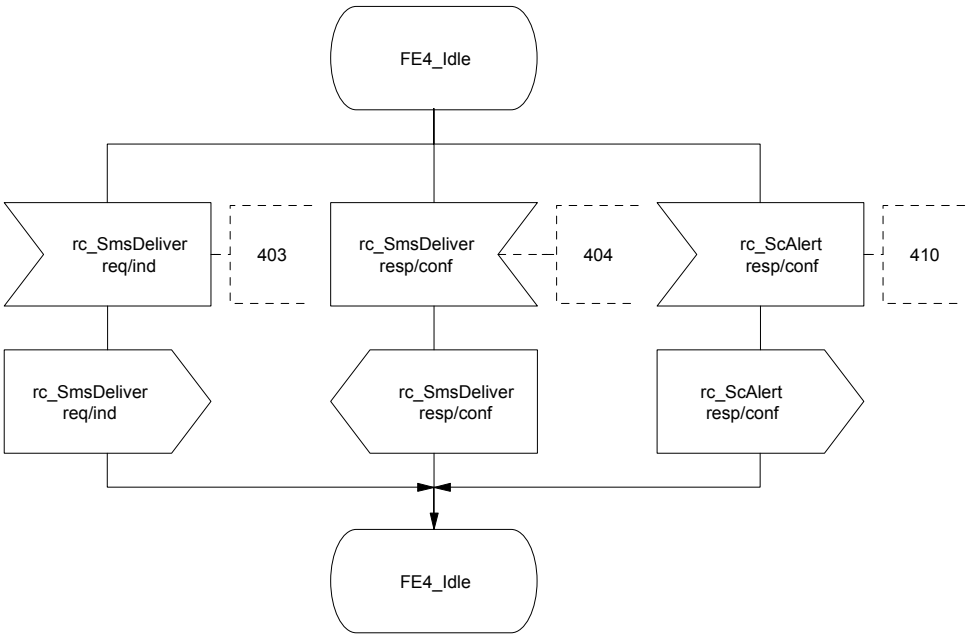

Figure 17 - SMS, SDL of Functional Entity 4 - Message Centre case (sheet 1 of 2)

© ISO/IEC 2002 – All rights reserved

Copyright International Organization for Standardization
Provided by IHS under license with ISO
No reproduction or networking permitted without license from IHS
Not for Resale

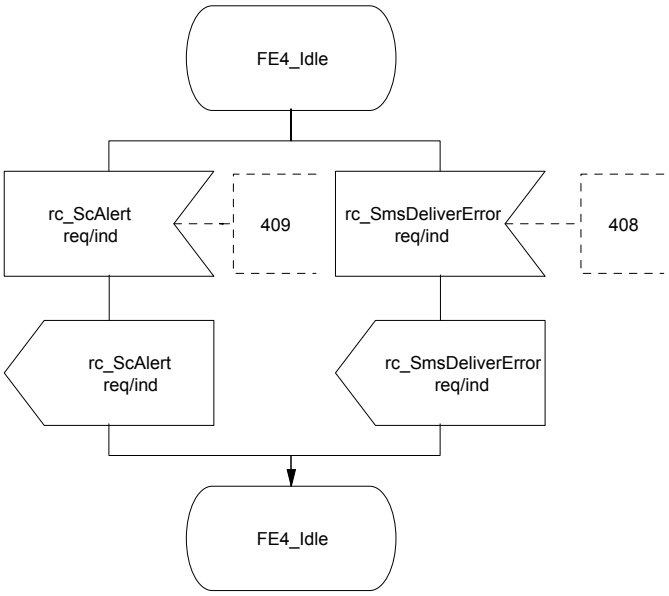

Figure 18 - SMS, SDL of Functional Entity 4 - Message Centre case (sheet 2 of 2)

7.4.4.2 Terminal case

Figure 19 shows the normal behaviour of FE4. Output signals to the left and input signals from the left represent information flows to and from FE3. Output signals to the right and input signals from the right represent information flows to and from FE5 or internal primitives.

© ISO/IEC 2002 – All rights reserved
Copyright International Organization for Standardization
Provided by IHS under license with ISO
No reproduction or networking permitted without license from IHS
Not for Resale

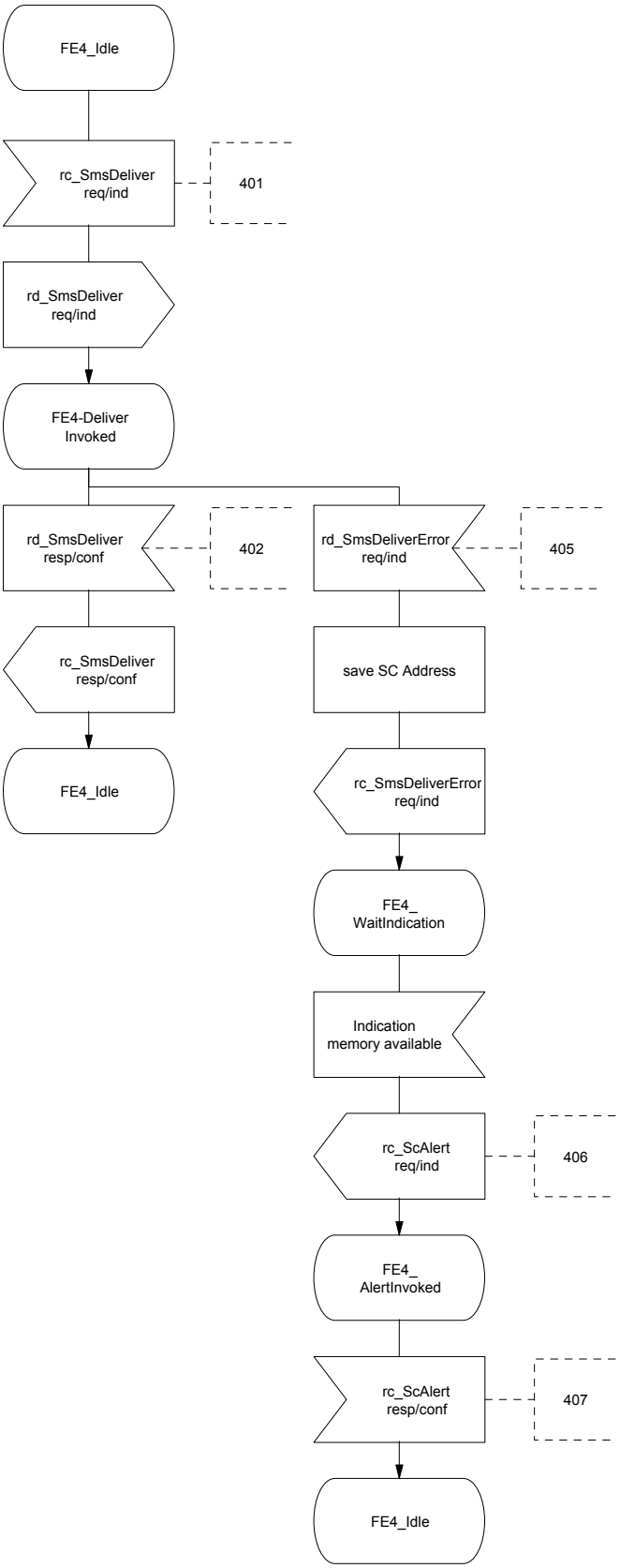

Figure 19 - SMS, SDL of Functional Entity 4, Terminal case

© ISO/IEC 2002 – All rights reserved

Copyright International Organization for Standardization
Provided by IHS under license with ISO
No reproduction or networking permitted without license from IHS
Not for Resale

7.4.5 Behaviour of FE5

Figure 20 shows the normal behaviour of FE5. Output signals to the left and input signals from the left represent information flows to and from FE4. Output signals to the right and input signals from the right represent information flows to and from the Receiving User.

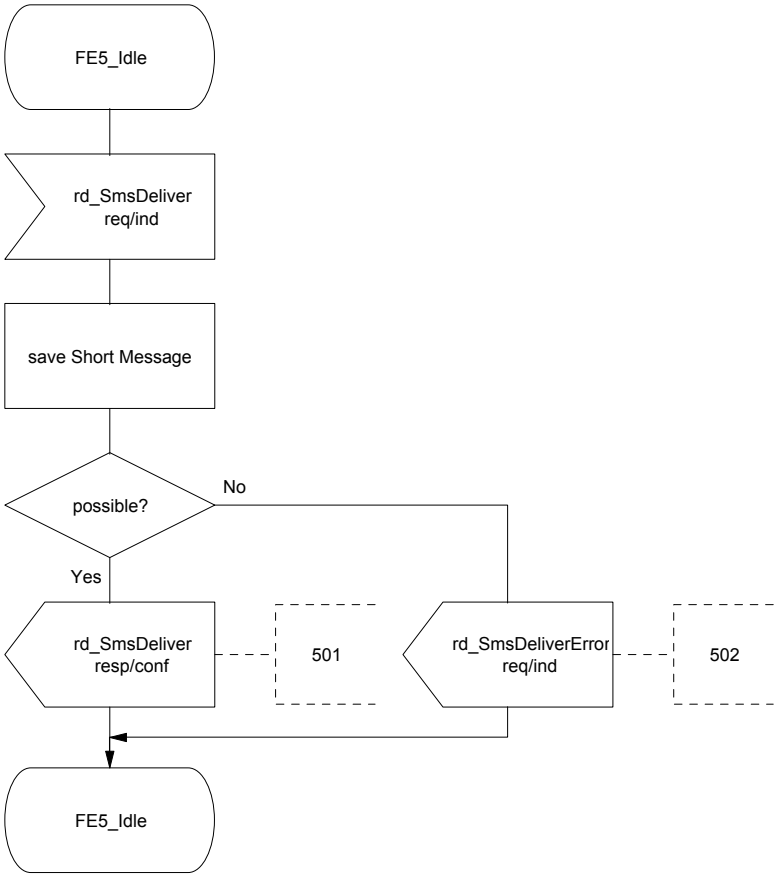

Figure 20 - SMS, SDL of Functional Entity 5

7.4.6 Behaviour of FE6

Figure 21 shows the normal behaviour of FE6. Output signals to the left and input signals from the left represent information flows to and from the Sending User. Output signals to the right and input signals from the right represent information flows to and from FE3.

© ISO/IEC 2002 – All rights reserved
Copyright International Organization for Standardization
Provided by IHS under license with ISO
No reproduction or networking permitted without license from IHS
Not for Resale

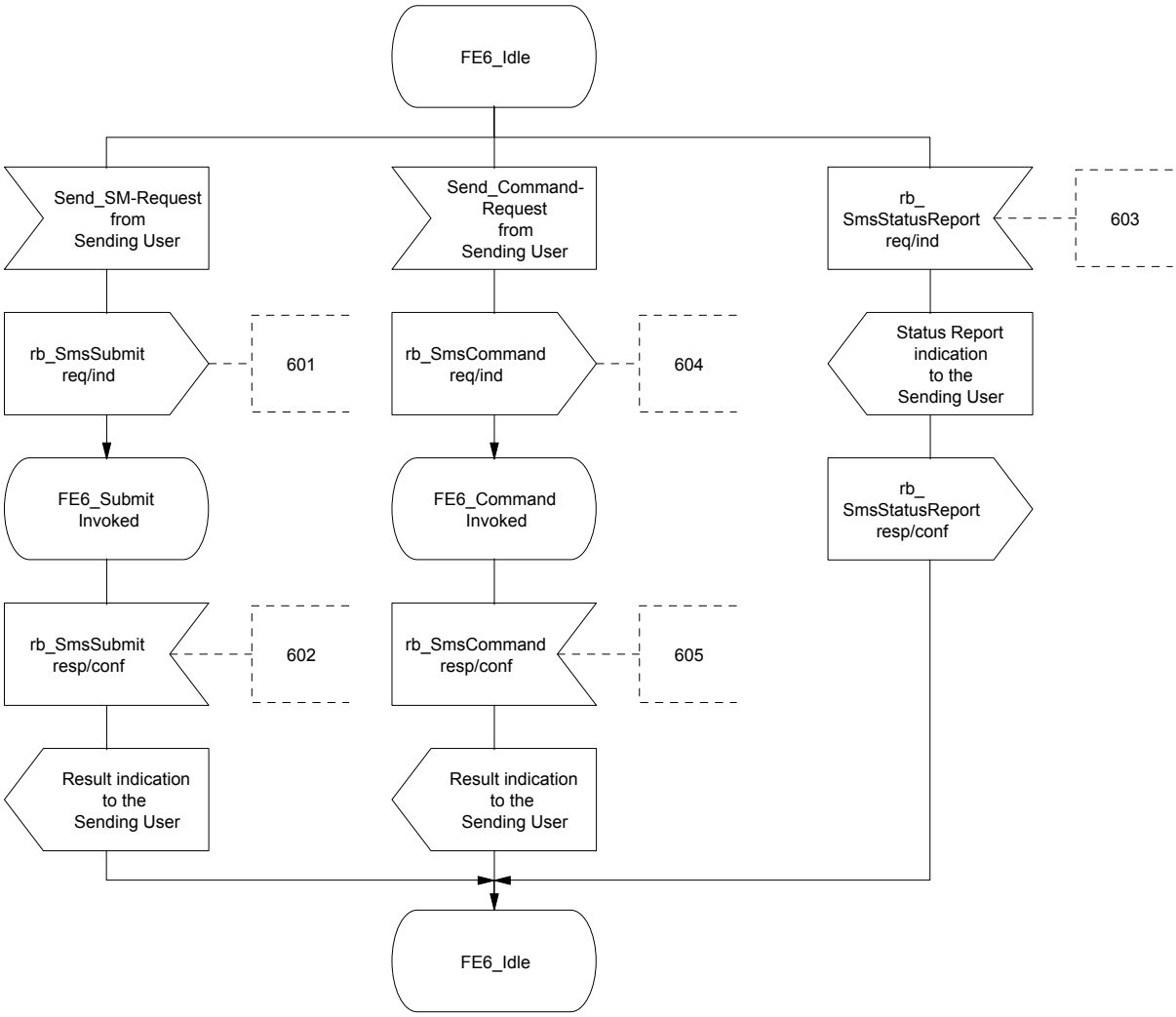

Figure 21 - SMS, SDL of Functional Entity 6

7.4.7 Behaviour of FE7

Figure 22 shows the normal behaviour of FE7. Output signals to the left and input signals from the left represent information flows to and from FE4. Output signals to the right and input signals from the right represent information flows to and from the Receiving User.

--`,,,`-`-`,,`,,`,`,,`---

© ISO/IEC 2002 – All rights reserved

Copyright International Organization for Standardization
Provided by IHS under license with ISO
No reproduction or networking permitted without license from IHS
Not for Resale

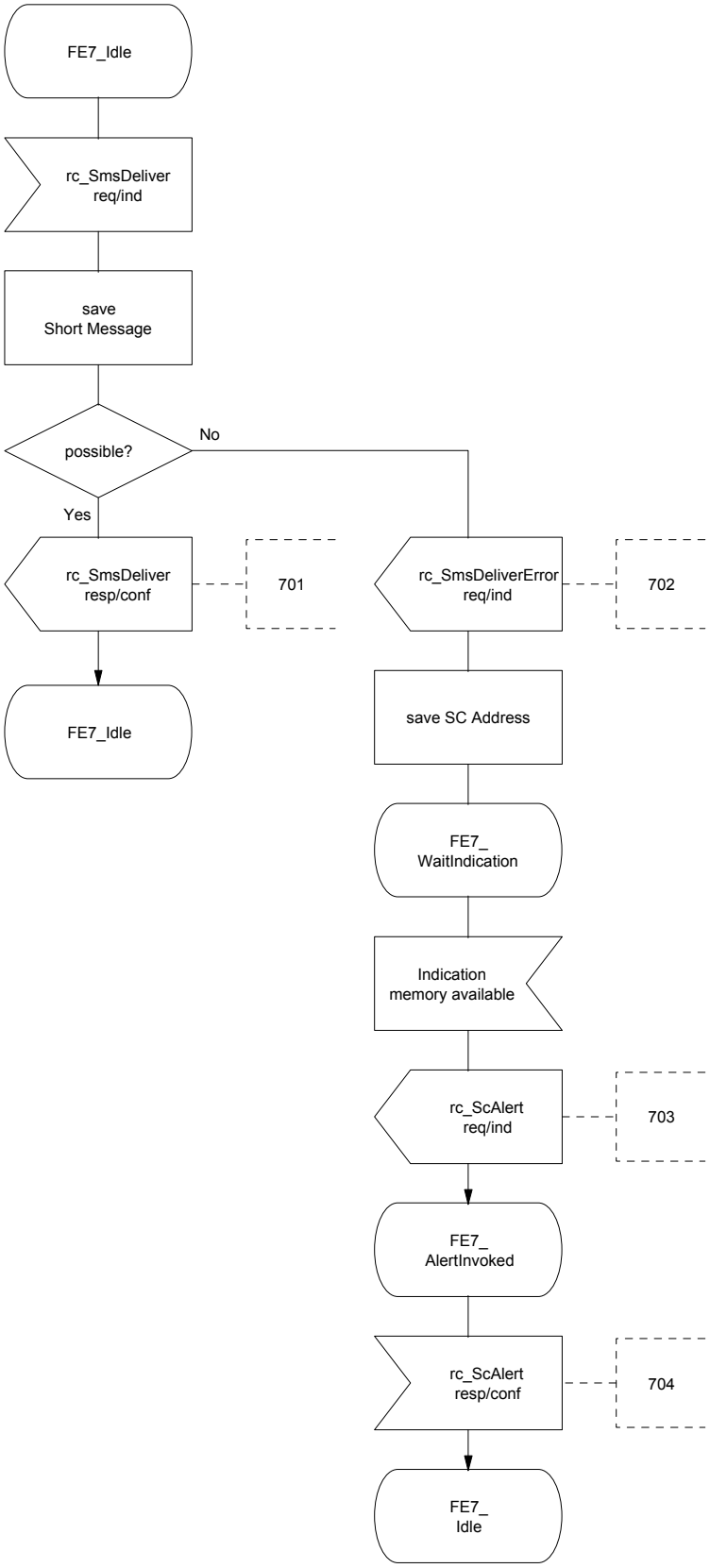

Figure 22 - SMS, SDL for Functional Entity 7

© ISO/IEC 2002 – All rights reserved
Copyright International Organization for Standardization
Provided by IHS under license with ISO
No reproduction or networking permitted without license from IHS
Not for Resale

7.5 Allocation of Functional Entities to physical equipment

The allocation of FEs to physical locations as shown in table 12 shall apply.

Table 12 - Scenarios for the allocation of FEs to physical equipment

	User A FE1	User A FE2	User A FE6	FE3	User B FE4	User B FE5	User B FE7
Scenario 1	TE	PINX	-	Service Centre	PINX	TE	-
Scenario 2	-	-	MC	Service Centre	PINX	-	MC
Scenario 3	TE	PINX	-	Service Centre	PINX	-	MC
Scenario 4	-	-	MC	Service Centre	PINX	TE	-

7.6 Interworking considerations

In the cases where FE4, FE5 or FE7 is in another network, information pertaining to relationship rc or rd shall be passed as appropriate to the other network by the Service Centre. The Service Centre shall contain a mapping function which will map the received information flows to the appropriate information flows of the other network (e.g. GSM-SMS).

In the cases where information is received from a FE located in another network the Service Centre shall map the information flows from that network (e.g. GSM-SMS) to the appropriate information flows in a PISN.

Table 13 - Scenarios for the allocation of FEs to physical equipment in the case of interworking with other networks

	User A FE1	User A FE2	User A FE6	FE3	User B FE4	User B FE5	User B FE7
Scenario 1	TE	PINX	-	Service Centre	other network	other network	-
Scenario 2	other network	other network	-	Service Centre	PINX	TE	-
Scenario 3	-	-	MC	Service Centre	other network	other network	-
Scenario 4	other network	other network	-	Service Centre	PINX	-	MC

© ISO/IEC 2002 – All rights reserved

Copyright International Organization for Standardization
Provided by IHS under license with ISO
No reproduction or networking permitted without license from IHS
Not for Resale

Annex A
(normative)

Description of PDU elements

A.1 Class

Indication how the message was handled at the Sending Users terminal and shall be handled at the Receiving Users terminal (concerning displaying, storage, acknowledging).

A.2 Command Data

Data relating to the action that the Sending User requests the Service Centre to perform. This Data may be part of a Command initiated by the Sending User.

A.3 Command Type

Type of action that the Sending User requests the Service Centre to perform. Command Types can be used e.g. for an enquiry of the status of a previously submitted SM, deletion of a previously submitted SM, etc.

A.4 Compressed

Indication whether the text of the Short Message is compressed or not.

A.5 Discharge Time

Indicates the time at which a previously submitted Short Message was

- successfully delivered to the Receiving Users Service Control Entity or
- attempted to deliver to the Receiving Users Service Control Entity or
- disposed of by the Service Centre.

A.6 More-Messages-to-Send

Indication that there are more messages waiting in that Service Centre to be sent to that particular Receiving User.

A.7 Priority

Requests a delivery attempt from the Service Centre to the Receiving User irrespective of whether or not the Receiving User has been identified as temporarily absent or having no memory available.

A.8 Protocol Identifier

This refers to a higher layer protocol or indicates interworking with a certain type of telematic device. In the case of interworking the sending terminal requests the SC to convert the SM into a format suitable for that Receiving Users terminal.

A.9 Receiving Users Name

This is the Receiving Users name, restrictions for name presentation shall apply accordingly.

A.10 Receiving Users Number

This is the Receiving Users PISN number.

A.11 Reject-Duplicates

Instructs the SC to reject or accept a Short Message already held in the Service Centre.

A.12 Reply-Path

Request from the Sending User to a SC to handle a reply SM sent in response to a previously received SM. In this case the Sending User of the reply SM is the Receiving User of the previously sent SM. The Sending User of the previously sent SM is the Receiving User of the reply SM. This may happen even though this SC is not known to the receiving terminal.

A.13 Sending User's Name

This is the Name of the Sending User, restrictions for name presentation shall apply accordingly.

© ISO/IEC 2002 – All rights reserved
Copyright International Organization for Standardization
Provided by IHS under license with ISO
No reproduction or networking permitted without license from IHS
Not for Resale

A.14 Sending User's Number

This is the Sending User's PISN number.

A.15 Service-Centre-Time-Stamp

Time of Arrival of the Short Message at the Service Centre. The same time value will also be carried in the SmsStatusReport to the Sending User relating to this particular Short Message. This will allow the Sending User to associate a particular sent SM with a subsequently received Status Report by correlating the two Service-Centre-Time-Stamp values.

A.16 Short Message Number

Short Message Reference of a previously submitted Short Message on which a specific Command shall be performed. This value is not identical with the Short Message Reference of the Command itself. For Command Types which are not for a specific Short Message this field shall be ignored when received.

A.17 Short Message Reference

This is a Reference-Number identifying the Short Message (or a Command) uniquely to the Service Centre.

A.18 Short-Message-Text

140 octet of data containing the message text and all optional User Data Headers.

A.19 SMSC Control Parameters

Control Parameters specifying on which condition the SC shall return a Status Report to the Sending User (e.g. after successful delivery of the SM to the Receiving User, due to permanent error, etc.). Status-Report-Request must be set in order to enable SMSC Control Parameters.

A.20 Status

Indicates the status of a previously submitted Short Message and certain Commands for which a Status Report has been requested.

A.21 Status Report Indication

Indication of whether or not the Sending User has requested a Status Report.

A.22 Status Report Qualifier

Indication of whether this Status Report is a response to a previously sent SM or Command.

A.23 Status-Report-Request

Request from the Sending User to the Service Centre to send a Status Report for a SM or a Command. Additionally, the SMSC Control Parameter may be included, indicating the conditions on which a Status Report shall be returned.

A.24 User Data Header

Sequence of one or more User Data Header(s). A User Data Header may be used to send a SM directly to an applications within the Receiving Users terminal, to transfer control information to the Service Centre or to concatenate Short Messages.

A.25 Validity-Period

Time to live for a Short Message in a Service Centre. After the expiration of the Validity Period the SM shall be deleted within the Service Centre and a Status Report might be returned to the Sending User.

© ISO/IEC 2002 – All rights reserved

Copyright International Organization for Standardization
Provided by IHS under license with ISO
No reproduction or networking permitted without license from IHS
Not for Resale

ICS 33.040.35

Price based on 39 pages

© ISO/IEC 2002 – All rights reserved

Copyright International Organization for Standardization
Provided by IHS under license with ISO
No reproduction or networking permitted without license from IHS

Not for Resale